- PN-ABS-214 ISN=89663 -
TN-031

FINAL REPORT

Covering Period: April 26, 1991 - June 11, 1994

Submitted to the Office of the Science Advisor
U.S. Agency for International Development

EXPLORATION OF GENETIC DIVERSITY IN HIMALAYAN HONEYBEE, *APIS CERANA*

Prof. L.R. Verma
(Principal Investigator)
International Centre for Integrated Mountain Development
(ICIMOD), Kathmandu, Nepal

Dr. T.E. Rinderer
(Collaborator)
USDA-ARS Honeybee Breeding Genetics and Physiology Research
Baton Rouge, Louisiana, 70820, USA

Project Number: 11.037
Grant Number: 367-5600-G-SS-1147-00
A.I.D. Grant Project Officer: Dr. Roger A. Bloom
Project Duration: April 26, 1991 - June 11, 1994

6/21/94

cc: BOST LD.

2. *TABLE OF CONTENTS*

		Page
1.	COVER PAGE	1
2.	EXECUTIVE SUMMARY	3
3.	RESEARCH OBJECTIVES	7
5.	METHODS AND RESULTS	10
	5a. Survey on the Status of Apis cerana Populations in Hindu Kush-Himalayan Region	10
	5b. Morphometric Research	13
	5c. Mitochondrial DNA Research	31
	5d. Bee Pollination Research	77
	5e. Behaviour and Apiary Management Researcn	87
	5f. Beekeeping Training and Demonstration Support	98
	5g. Networking and Information Exchange	98
6.	IMPACT, RELEVANCE AND TECHNOLOGY TRANSFER	99
7.	PROJECT ACTIVITIES/OUTPUTS	101
	7a. Travel	101
	7b. List of Project Publications	103
8.	PROJECT PRODUCTIVITY	106
9.	FUTURE WORK	106
10.	LITERATURE CITED	108

3. *EXECUTIVE SUMMARY*

Investigations on project entitled "Exploration of Genetic Diversity in Himalayan Honeybee, *Apis cerana*" was carried out from April 26, 1991 to June 11, 1994. The research work conducted includes studies on the status of beekeeping with *Apis cerana* in Hindu Kush Himalayan region, computer assisted multivariate morphometric and mitochondrial DNA analysis to identify different sub-species/geographic ecotypes of this valuable genetic resource, research on pollination ecology of vegetable seed production in Kathmandu valley, Nepal, behaviour and apiary management research to increase productivity and efficiency of *Apis cerana* for better honey production and pollination activities. Besides scientific research, other project activities included beekeeping training, networking of beekeeping research and development activities, advisory/consultancy services to different national, bilateral and international agencies/projects in beekeeping throughout Asia and outside.

Survey on status of beekeeping with *Apis cerana* in Hindu Kush-Himalayan region conducted as a part of this project reveals that this bee species is suffering precipitous decline and is threatened with extinction throughout its range. The major threat comes from its replacement with exotic and more prolific *Apis mellifera*, habitat alteration, pesticide poisoning, diseases and enemies particularly recurrence of sacbrood virus disease and human predations especially through traditional honey hunting methods. While the consequence of a decline in *Apis cerana* populations throughout Asia can only be speculated at, it is clear that such decline is undesirable in terms of economic development, productivity of farming systems, biodiversity conservation and carrying capacity of natural ecosystems.

Computer assisted multivariate-morphometric analysis results reveal that *Apis cerana* in Hindu Kush-Himalayan region can be divided into three sub-species, namely, *Apis cerana cerana*, *Apis cerana himalaya* and *Apis cerana indica*. Such genetic diversity also reflects variations in commercial value of these different sub-species thus providing excellent opportunity for their genetic improvement through further selection, breeding and molecular research. For example,

Apis cerana cerana from Kashmir Himalayas and Jumla region of Nepal Himalayas are darker in color, larger in size and matches *Apis mellifera* in honey production, should be investigated further for commercial use in other parts of Asia.

Each sub-species has further locally adapted populations called geographic ecotypes which differ from each other in several biological and economic characters. For example, in northwest Himalayas, *Apis cerana cerana* consists of two biometric groups corresponding to Himachal Pradesh and Jammu and Kashmir regions. The biometric analysis of the samples of bees from central Himalayas (Uttar Pradesh and Nepal) reveals that distinct, allopatric populations of this bee species occur in foot hills and mountains of Himalayas. In Nepal and Uttar Pradesh, the populations generally replace one another along the eastwest axis of the mountain range and each may be distributed from the foot hills up into the mountain areas of wide range of altitudes. In north-east Himalayas, we have successfully identified three ecotypes of sub-species *Apis cerana himalaya* that correspond to geographic distribution in (i) the Naga and Mizo hills (ii) Brahamputra valley and Khasi hills and (iii) the foot hills of the north-east Himalayas.

A survey with 14 restriction endonucleases was conducted to determine which ones cut multiple sites in *Apis cerana* mitochondrial DNA (mtDNA). The mtDNA from 99 samples of *Apis cerana* from three elevations (high, middle, low) in the himalayas was extracted and cut with 5 enzymes: BCl I, Bgl II, EcoR I, Hind III, HinfI. The samples were also analyzed with the allozymes Hexokinase (HEX), Phosphogucomutase (PGM) and Malate-dehydrogenase (MDH). The resulting data were then analysed to determine the frequencies of variation of *Apis cerana* among the three elevations. Two restriction endonucleasus showed no variation, however the other three enzymes (Bcl I, Bgl II and EcoR I) showed two separate patterns (A & B). EcoR I showed 78.57%, 100% and 85.71% pattern A for high, middle and low respectively. Bgl II showed 71.43%, 87.50% and 100% pattern A for high, middle and low respectively. In the allozymes for homozygous fast: MDH showed 100%, 97.14% for high,

middle and low respectively. HEX showed 86.21%, 62.86% and 56.52% for high, middle and low respectively. For homozygous slow PGM showed 0%, 0% and 14.29% for high, middle and low respectively.

Research on pollination ecology of vegetable seed production suggests that it is possible to significantly enhance quality, seed yield (by 40 to 50 percent), germination percentage and resistance to fungal infection in cross pollinated crops like cauliflower, cabbage, radish, and by 20 per cent in self-pollinated crops like Indian mustard and lettuce through the utilization of *Apis cerana* as pollinator. Comparative foraging behaviour studies on native *Apis cerana* and exotic *Apis mellifera* on vegetable crops reveal that former is a better pollinator of agricultural crops and should be encouraged for commercial development, outside its native range also.

Behavioural research in terms of nectar and pollen collection, brood rearing and reproductive swarming reveals that *Apis cerana* resembles more to tropical African honeybee *Apis mellifera scutellata* than other temperate races of *Apis mellifera*. These resembling characteristics are extended foraging hours throughout much of the year, higher rates of swarming, small colony population size, collection of food over smaller area of the environment, more emphasis on pollen collection and more frequent absconding tendencies.

In apiary management research, major emphasis was on Sacbrood virus disease in *Apis cerana* which is at present one of the major constraint in beekeeping with this native bee species. Amongst the different control measures tried, uniting the weak colonies, sterilization of hive and combs with formaline and mechanical removal of affected larvae checks the spread of this disease.

Besides research, this project has successfully organized two beekeeping training camps at "train the trainer" and "train the farmer" level in collaboration with HMG Nepal/FAO Vegetable Seed Production Project, HMG Nepal/UNDP Shivapuri Integrated Watershed Project

and Himal Bee Concern (an NGO) in Kathmandu, Nepal. Field demonstrations were held in Vegetable Seed Production Farm Khumaltar, Kathmandu to demonstrate benefits of bee pollination and another one in Mulkhera Village of Shivapuri Watershed area exhibiting beekeeping as a source of cash income and food. A demonstration/training apiary of 50 *Apis cerana* colonies has been set up at ICIMOD's trial and demonstration area near Royal Botanical Gardens in Godavari, Kathmandu.

This project has also been successful in networking beekeeping research and development activities with concerned institutions in ICIMOD countries and also has been rendering advisory/consultancy services to different national, bilateral and international projects in beekeeping throughout Asia and outside.

This project besides generating valuable database through scientific research has also been successful in creating awareness about the value of beekeeping with native *Apis cerana* as a non-land based income and nutritious food generating activity. Beekeeping as such is now becoming an important component of present-day strategies for sustainable agriculture and integrated rural development programmes. The results of scientific research of this project will be of immediate use to agricultural and other applied scientists, conservation biologists, extension workers, policy makers, planners and aid agencies and also go far beyond the sphere of its primary users to propagate the knowledge concerning the intrinsic value of bees and beekeeping to the environment and society as a whole.

4. RESEARCH OBJECTIVES

The overall aim of this scientific research work was conservation of *Apis cerana* through development and promotion of beekeeping with this native bee species. The specific research objectives included (i) identification of commercial sub-species and ecotypes of *Apis cerana* through computer assisted multi-variate morphometric and mitochondrial variations analysis (ii) study the role of *Apis cerana* in enhancing vegetable seed production (iii) conduct behavioural and apiary research for better management of *Apis cerana* and (iv) training in modern methods of beekeeping with *Apis cerana* for better honey production and crop pollination.

Before the start of this project, earlier research work done on this bee species from tropical parts of southeast Asia painted a picture of a small sized bee that did not produce large quantities of honey and possessing undesirable biological traits from practical beekeeping point of view like small colony populations, frequent swarming, absconding, robbing etc.

The current research work on mountain populations of *Apis cerana* found in the Hindu Kush-Himalayan region have revealed several previously unknown and very important traits of great commercial value and breaks entirely new ground. These include the following.

- The genetic diversity of European honeybee, *Apis mellifera* has been organized into 24 sub-species having varied economic usefulness. The extent of genetic diversity in *Apis cerana* has been for the first time studied through modern computer assisted multivariate morphometric analysis and molecular research in this project. These results reveal occurrence of three sub-species and several locally adapted geographic ecotypes/populations. Such scientific database on genetic variations can be of great value in further genetic improvement of *Apis cerana* through classical selection and breeding work and modern molecular research.

- Some of the sub-species/ecotypes of *Apis cerana* matches European honeybee in body size and honey production and these need to be investigated further.

- For the first time, an essentially wild or feral populations of *Apis cerana* that have tremendous economic potential both in the region and outside has been investigated in genetic detail. The genetic variations documented through this research work will support programme to preserve this valuable genetic resource which has already became endangered throughout its range.

- Another significant aspect but not widely known especially in developing countries of southeast Asia is the role which this native bee species play in boosting the productivity of agricultural crops and improving the quality of the seed and fruits through its pollination activities. Results obtained through the present research work reveal that in comparison to honeybee *Apis mellifera*, this native bee species (*Apis cerana*) offers several comparative advantages as a pollinator of agricultural crops. These include the following.

  i Initiate foraging at lower temperatures
  ii Longer foraging hours
  iii Shorter flight range
  iv No competition for food and nesting sites with other bee species
  v Co-evolution with native crops
  vi More suitable for glass house pollination
  vii Better searching ability for sparse floral resources

Through apiary management and behavioural research, following new economic and biological characters in this bee species have been discovered which are of great practical value to develop this bee species into a valuable commercial product.

Low cost technology

- Requires no medication
- Less prone to attack of mites and predatory wasps
- Less susceptible to nosema disease
- More resistant to wintering
- Less stinging/Gentle
- Industrious
- Well adapted to different eco-geographic zones

The present USAID (PSTC) funded project is first of its kind to run on a regional level involving entire Himalayan region countries. Main scientific collaborator for this project was Dr. T.E. Rinderer, Director USDA-ARS Honeybee Breeding, Genetics and Physiology Research Laboratory, Baton Rouge, Louisiana who conducted research on analysis of mitochondrial DNA variations. Principal Investigator of this research project also collaborated with Prof. Howell V.Daly, Professor of Entomology, University of California, Berkeley, USA, Mrs. Dr. Savitri Verma and Dr. V.K. Mattu, Department of Bio-Sciences, Himachal Pradesh University, Shimla, India on morphometric research.

5. *METHODS AND RESULTS*

5a. Survey on Status of *Apis cerana* Populations in Hindu Kush-Himalayan Region

Despite its economic usefulness, beekeeping with native Asian hive bee, *Apis cerana* is suffering precipitous decline and is threatened with extinction in its entire native habitat. For example, in Japan, beekeeping with *Apis cerana* has been completely replaced by European hive bee *Apis mellifera* and only a few beekeepers and research institutes are raising *Apis cerana* colonies (Sakai 1992). In China, out of more than 8.5 million colonies of honeybees kept in modern hives, 70 per cent are European *Apis mellifera* and only 30 per cent are native *Apis cerana* (Zhen-ming et al.1992). Similarly in south Korea, only 16 per cent beekeeping is with native *Apis cerana* and the remaining has been replaced by exotic *Apis mellifera* (Choi 1984).

Keeping in view, such alarming decline in natural populations of *Apis cerana* in Asia, a survey on the populations of feral and domesticated colonies of *Apis cerana* in eight countries of Hindu Kush-Himalayan region was conducted under the present project.

Survey work on the status of *Apis cerana* beekeeping in Hindu Kush-Himalayan countries was done through field visits and by obtaining the necessary information from the concerned collaborating institutions/organizations in the region as listed in Table 1. The countries surveyed included Bangladesh, Bhutan, China, India, Myanmar, Nepal and Pakistan.

Results

Present survey reveal that natural populations of *Apis cerana* in Hindu Kush-Himalayan region is declining at such a fast rate that present level of their populations is no longer viable. In countries like Afghanistan, Bhutan, Burma, Nepal, India and Pakistan, native *Apis cerana* is being replaced by exotic European honeybee, *Apis mellifera*. For example, in the small

Himalayan state of Himachal Pradesh in northern India, which has a centuries old tradition of beekeeping with *Apis cerana*, all development extension and development centres have introduced exotic *Apis mellifera*. Even in the Kashmir region of northwest Himalayas, where *Apis cerana* matches *Apis mellifera* in body size and honey production, only a few percent of *Apis cerana* colonies are left and this bee species may soon be wiped out. Also in NWFP of Pakistan, commercial beekeeping with *Apis mellifera* has replaced the traditional established craft of beekeeping with *Apis cerana*. Similar visit by Dr. Eva Crane to some mountain areas of Pakistan concluded that *Apis cerana* may soon become an endangered species (Crane, 1992).

The major threat for such a decline comes from its replacement by a more productive type of beekeeping with European honeybee, *Apis mellifera* which is now becoming the basis of flourishing industry in some parts of the region. Other causal factors for loss of this valuable genetic resource are habitat alteration from highly diverse natural ecosystems to far less diverse (often monoculture) agro-systems, indiscriminate use of biocides, incidence of Thai Sacbrood Virus disease and over-harvesting of hive products by traditional honey hunting methods. Table 2 lists the components of population vulnerability analysis in *Apis cerana* and Fig. 1 represents the overlaps and interactions of these components schematically. Such a rapid decline in genetic diversity of *Apis cerana* would not only mean serious negative impact on the income level and nutrition source of mountain communities living at or below subsistence level but also serious impairment of essential ecological services, loss of bio-diversity and carrying capacity of natural ecosystems (Fig. 2).

Note: *The details of consequences and causes of threatened extinction as well different strategies for conserving Apis cerana based on scientific data generated through this project are discussed at length in a series of research papers published by Principal Investigator of this project along with other project collaborators and are enclosed with this final report (please see MS# 1-6 in compendium of this final report).*

Table 1. Survey of *Apis cerana* Populations in Hindu Kush-Himalayan Region

Country	Region	Collaborating Agency
Bangladesh	Plains Mid-Hills High Mountains	Swedish Apiculture Project
Bhutan	Plains Mid-Hills High Mountains	Department of Agriculture, RGB
Pakistan	Islamabad, NWFP and Panjab	Pakistan Agricultural Research Council
India	NW, Central, NE Indian Himalayas and South India	Department of Bio-Sciences, H.P. University, Shimla
Nepal	Terai Mid Hills High Mountains	Department of Agriculture, HMG, Nepal

5b. Morphometric Research

In European honeybee, *Apis mellifera*, more than 24 sub-species and several geographic ecotypes which exist in tropical Africa, north Africa, the Near East and the Mediterranean regions have been identified through classical and computer based morphometric analyses (Alpatov 1929, Smith 1961, Ruttner 1988, Daly and Balling 1978, and Daly 1975). The Asian hive bee *Apis cerana* is distributed over a wide area extending from Afghanistan to Japan and southeast in Asia to the Wallace line (Ruttner, 1988). However very little information is available about this bee species biometry except to note the existence of a hill and a plains variety (Kapil 1956, Narayanan et.al 1960; 1961 a,b, and Kshirsagar 1976). These earlier biometric investigations were based on few morphological characters, small number of samples only from Indian hills and plains and lacked proper statistical analysis of the data. Such morphometric analysis does not enable to deduct distinct sub-species/eco-types. with varied economic usefulness.

Under the present project, research on genetic diversity of *Apis cerana* was conducted in the Hindu Kush-Himalayan region which has the largest and most economically useful sub-species and eco-types of this native bee species.

Materials and Methods

In the present investigations, for morphometric research on *Apis cerana*, survey and sample collection work was done from Hindu Kush-Himalayan region representing Bangladesh, India, Nepal and Pakistan. Besides, these countries, *Apis cerana* samples have also been collected from Japan, Taiwan, Thailand and Vietnam for comparative biometric analysis. Such survey and sample collection work has been carried out in collaboration with concerned institutions/organizations in these countries (Table 1).

So far morphometric analysis of *Apis cerana* samples from 68 localities representing temperate, warm temperate and sub-tropical zones of Indian and Nepal Himalayas have been done through the use of computer assisted biometric multivariate analysis. Collection of 60 bees were made at each of 68 localities. The physiographic details of each locality and its code number is given in Table 2. Code number for the characters and brief description of measurements are provided in Table 3.

Computations were performed on an IBM 3081 computer at the University of California, Berkeley. For the discriminant analysis, the programme DISCRIMINANT from the Statistical Package for the Social Sciences (Norusis, 1985) was used. The analysis was made with the direct option (all characters entered in the analysis) and equal prior probabilities for classification. The programme NTSYS-PC (Rohlf, 1987) was used to perform unweighted pair-group cluster analysis with arithmetic averages (UPGMA), as described by Sneath and Sokal (1973). All other computations were made with programmes written by H.V. Daly and performed on an IBM-AT microcomputer.

Results

The results of morphometric analysis from 68 localities of Himalayan region are summarized in Figures 1 and 2. These results suggest that *Apis cerana* F from Indian and Nepal Himalayas can be classified in to three sub-species namely, *Apis cerana cerana*, *Apis cerana himalaya* and *Apis cerana indica*. Of these, *Apis cerana cerana* is distributed over higher hills of Nepal and northwest Indian Himalayas comprising of Himachal Pradesh and Jammu and Kashmir regions. *Apis cerana himalaya* is found in middle hills of Nepal, Uttar Pradesh hills and northeast Himalayas. The third sub-species i.e. *Apis cerana indica* is distributed over the plains of India and Terai regions of Nepal. Comparative biometric data of *Apis cerana* from Hindu Kush-Himalayan region reveal that worker bees of *Apis cerana cerana* are of the largest size from Kashmir Himalayas and Jumla region of Nepal Himalayas. *Apis cerana himalaya* from sub-tropical Nepal and Uttar Pradesh (India) and northeast Himalayas are of intermediate size.

Discriminant function analysis and cluster analysis of 55 morphometric characters of *Apis cerana cerana* from 20 localities in Himachal Pradesh and Jammu and Kashmir of the north-west Himalayas reveal further two distinct biometric groups (Fig. 3). The groups are allocated with differences in the climates of the Himachal and Kashmir region. These results further confirm the view that some morphological characters were associated with altitude and rainfall such that bees were larger and darker at higher altitudes and lower rainfall. The phonetic clustering of samples within each region correspond in general to physiography (Fig. 4 and Fig. 5).

The discriminant function analysis was made of the 55 morphometric variables measured on samples of bees collected from 32 localities in Uttar Pradesh and Nepal. A phenogram was prepared by cluster analysis (unweighted pair-group method with arithmetic average or UPGMA) of the Euclidean distances among 32 localities. When the biometric groups were marked on a map of the collection localities, it could be shown that the biometric groups often coincided with clusters of localities within a geographic area. This supports the hypothesis that the biometric groups are genetically related populations that differ from other such populations.

For the purposes of this discussion (Fig. 6 and 7), in central Himalayas six biometric groups will be recognized: (1) Lucknow, India (locality 71), (2) Western Uttar Pradesh, India (WUP; localities 77-82), (3) Eastern Uttar Pradesh, India (EUP; localities 72-76), (4) Jumla, Nepal (JUM;localities 101-102), (5) West and East Central Nepal (W&ECN;localities 92-100), and (6) West Central and East Nepal (WC&EN;localities 83-91).

The biometric analysis of the samples of bees from Uttar Pradesh and Nepal confirms the observations of Singh, Verma and Daly (1990) and Verma, Mattu and Daly (1994) that distinct, allopatric populations of Indian honeybees occur in foothills and mountains of the Himalayas. In Nepal and Uttar Pradesh, the populations generally replace one another along the east-west axis of the mountain range and each may be distributed from the foothills up into the mountains over a wide range of altitudes.

Analysis of 55 morphometric characters were made for collections of *Apis cerana* from 16 localities in the northeast Himalayan region. Bees from this region have been recognized as distinct from those of the northwest Himalayas and South India. In this region, 3 biometric groups were identified that correspond to geographic distribution in (1) the Naga and Mizo Hills, (2) Brahmaputra valley and Khasi hills (3) the foothills of the Himalayas (Fig. 8 and 9). Discriminant analysis of the samples using all characters and a minimum number of characters are given with appropriate statistics. Correlations of character variation with rainfall and altitude are discussed. Bees from the Himalayan biometric group (3) are generally larger in size than those from the other two groups as well as South India.

Comparative biometrical data on *Apis cerana* collected from the northeast Himalayan region revealed that most of the morphological characters showed significantly higher values for bees of HIMA group than NAGA and BRAH groups (HIMA > NAGA > BRAH). Further, morphometric comparison of *Apis cerana* found in the northeast Himalayas with other ecotypes of the northwest and central Nepal Himalayas indicated significant differences in size (northwest Himalayas > central Nepal Himalayas > northeast Himalayas). Also, bees of the northeast Himalayan region were larger in size than South Indian bees (Verma, unpublished). However, all the biometric characters studied did not show such a trend. Present results support the conclusions of Ruttner (1988), that bees from the eastern Himalayas form a race separate from bees from the western Himalayas (*Apis cerana cerana*) and South India (*Apis cerana indica*).

Note: One important research publication on the results of morphometric research is included in the compendium of this annual report as MS # 7 and another one is under preparation.

Table 1. Collection of *Apis cerana* bee samples for morphometric research

Country	Region	Collaborating Agency
Bangladesh	Plains Mid-Hills High Mountains	Swedish Apiculture Project
Bhutan	Plains Mid-Hills High Mountains	Department of Agriculture, RGB
Pakistan	Islamabad, NWFP and Panjab	Pakistan Agricultural Research Council
India	NW, Central, NE Indian Himalayas and South India	Department of Bio-Sciences, H.P. University, Shimla
Nepal	Terai Mid Hills High Mountains	Department of Agriculture, HMG, Nepal

Also *Apis cerana* samples from Korea, Japan, Thailand and Vietnam have been collected for comparative morphometric studies.

Table 2. Code number of collection localities and geographic co-ordinates, latitude in meters, longitude in decimal degrees, altitude in meters and rainfall in mm.

Name	Code	Latitude	Longitude	Altitude	Rain
Geographic Group NAGA:					
Moirang	21	24.30	93.48	782	1335
Imphal	22	24.49	93.58	792	1311
Churachandpur	23	24.20	93.40	914	1276
Ukhrul	24	25.08	94.23	1829	1638
Mao	25	25.30	94.07	2012	1266
Aizawl	26	23.45	92.45	1132	2080
Kohima	27	25.68	94.06	1495	1327
Geographic Group BRAH:					
Dimapur	28	25.54	93.48	160	1288
Silchar	31	24.50	92.51	67	3294
Guwahati	32	26.11	91.47	56	1612
Shillong	33	25.34	91.56	1496	2149
Geographic Group HIMA:					
Bongaigaon	29	26.28	90.32	76	2171
Khoirabari	30	26.38	91.51	134	1896
Itanagar	34	27.08	93.40	550	2395
Kurseong	35	26.56	88.20	1458	3000
Gangtok	36	27.20	88.40	1818	3434
Geographic Group Himachal Region:					
Bilaspur	51	31.15	76.40	587	1022
Kangra	42	32.05	76.16	700	1623
Mandi	53	31.43	76.50	761	1388
Nahan (Sirmor)	54	30.33	77.21	905	2221
Bhareri (Hamirpur)	55	31.23	76.34	1007	1812
Katrain (Kullu)	56	32.05	77.08	1463	789
Solan	57	30.50	77.08	1530	1187
Dalhousi (Chamba)	58	32.32	75.58	2036	2140
Shimla (Shimla)	59	31.07	77.10	2206	1625
Bagi (Shimla)	60	31.15	77.27	2648	1518
Poo (Kinnaur)	61	31.40	78.34	2837	368
Roghi (Kinnaur)	62	31.32	78.15	3017	749

Name	Code	Latitude	Longitude	Altitude	Rain
Geographic Group Kashmir Region:					
Rajouri	63	33.23	74.21	938	1354
Kishtwar (Doda)	64	33.19	75.48	1664	397
Srinagar	65	34.05	74.50	1768	658
Kupwara	66	34.31	74.16	1811	690
Tral (Pulwama)	67	33.56	75.10	2007	406
Gurais (Baramulla)	68	34.38	74.53	2364	555
Sonamarg (Srinagar)	69	34.18	75.21	2740	1815
Dras (Kargil)	70	34.26	75.49	2977	500
Geographic Group Uttar Pradesh Region:					
Lucknow	71	26.51	80.55	371	3514
Haldwani	72	29.13	79.31	440	9839
Gurna	73	29.35	79.36	1486	4346
Lohaghat	74	29.39	79.49	1645	6300
Pithoragarh sample deleted	75	29.35	80.13	1666	6377
Almora	76	29.45	79.39	1676	6942
Haridwar	77	29.57	78.10	300	4420
Dehradun	78	30.20	78.03	762	8819
Jeolikote	79	28.56	79.25	1250	5179
Pauri	80	30.10	78.48	1550	5471
Nainital	81	29.23	79.27	1920	6166
Chaubattia	82	29.09	79.15	2122	6112
Geographic Group Nepal Region:					
Letang (Morang)	83	26.40	87.25	250	3064
Ghorahi (Dang)	84	28.05	82.20	400	1867
Homtang (Bhojpur)	85	27.10	87.10	600	1031
Laltibang	86	28.20	82.30	900	1109
Virgaon (Dhankuta)	87	27.05	87.51	1200	731
Madanpokhara	88	27.50	83.40	1200	2050
Tansen (Palpa)	89	27.55	83.40	1067	1983
Lumle (Kaski)	90	28.20	84.00	1400	5964
Liwang (Rolpa)	91	28.25	82.40	1500	1818
Suspa/Dosu (Dolakha)	92	27.44	86.10	1600	1825
Sidheshwar (Sindhuli)	93	27.18	85.56	1463	2705
Budhanilkantha (Kathmandu)	94	27.42	85.20	1336	1261
Birgunj (Parsa)	95	27.05	84.56	91	1062
Raniban/Durg (Achham)	96	29.10	81.20	1345	1505
Lanakedareshwar (Doti)	97	29.22	80.56	1360	1541
Navadurga (Dandeldhura)	98	29.15	80.27	1837	1338
Sharmali (Baitadi)	99	29.14	80.25	1635	1623
Lali (Darchula)	100	29.49	80.36	1097	2338
Ghughuti (Jumla)	101	29.18	82.12	2470	871
Vinaula (Jumla)	102	29.18	82.18	2895	879

Table 3. **Code numbers for characters and brief descriptions of the measurements. Tergites and sternites are counted posterior to petiole. i.e. metasonal segments. Abbreviations refer to labels in illustrations of Mattu and Verma (1984 a.b).**

Forewing:

1 Length of radial cell (RcL)
2 Breadth of radial cell (RcB)
3 Length of basal portion of radial cell (RcL_1)
4 Length of apical portion of radial cell (RcL_2)
5 Length of forewing (FwL)
6 Breadth of forewing (FwB)
7 Length of 1st abscissa of vein M_3+_4 in 2nd median cell (a)
8 Length of 2nd abscissa of vein M_3+_4 in 2nd median cell (b)
9 Angle 31 of forewing
10 Angle 32
11 Angle 33
12 Angle 34
13 Angle 35
14 Angle 36
15 Angle 37
16 Angle 38
17 Angle 39
18 Angle 40
19 Angle 41

Hindwing:

20 Length of basal portion of radial vein (RL)
21 Length of apical portion of radial vein (ML)
22 Length of discoidal vein (VL)
23 Length of indica vein (IL)
24 Breadth of hind wing (HwB)
25 Length of hind wing (HwL)
26 Number of hamuli (NH)
27 Extent of hamuli (EH)
28 Length of jugal lobe (JL)
29 Length of vannal lobe (VL)

Hind leg

30 Length of femur
31 Length of tibia
32 Length of metatarsus
33 Breadth of metatarsus

Tongue

34 Length of prementum
35 Breadth of prementum
36 Total tongue length
37 Length of labial palp
38 Length of postmentum
39 Length of glossa

Abdomen (metasoma)

40 Length of light band of 3rd tergite
41 Length of dark band of 3rd tergite
42 Total length of 3rd tergite
43 Length of light band of 4th tergite
44 Length of dark band of 4th tergite
45 Total length of 4th tergite
46 Breadth of wax mirror on 3rd sternite (WmB)
47 Distance between wax mirrors on 3rd sternite (WmD)
48 Length of wax mirror on 3rd sternite (WnL)
49 Total length of 3rd sternite (S3)
50 Length or depth of 6th sternite (L6)
51 Breadth of 6th sternite (B6)

Antenna

52 Length of scape
53 Length of pedicel
54 Length of flagellum
55 Total length of antenna

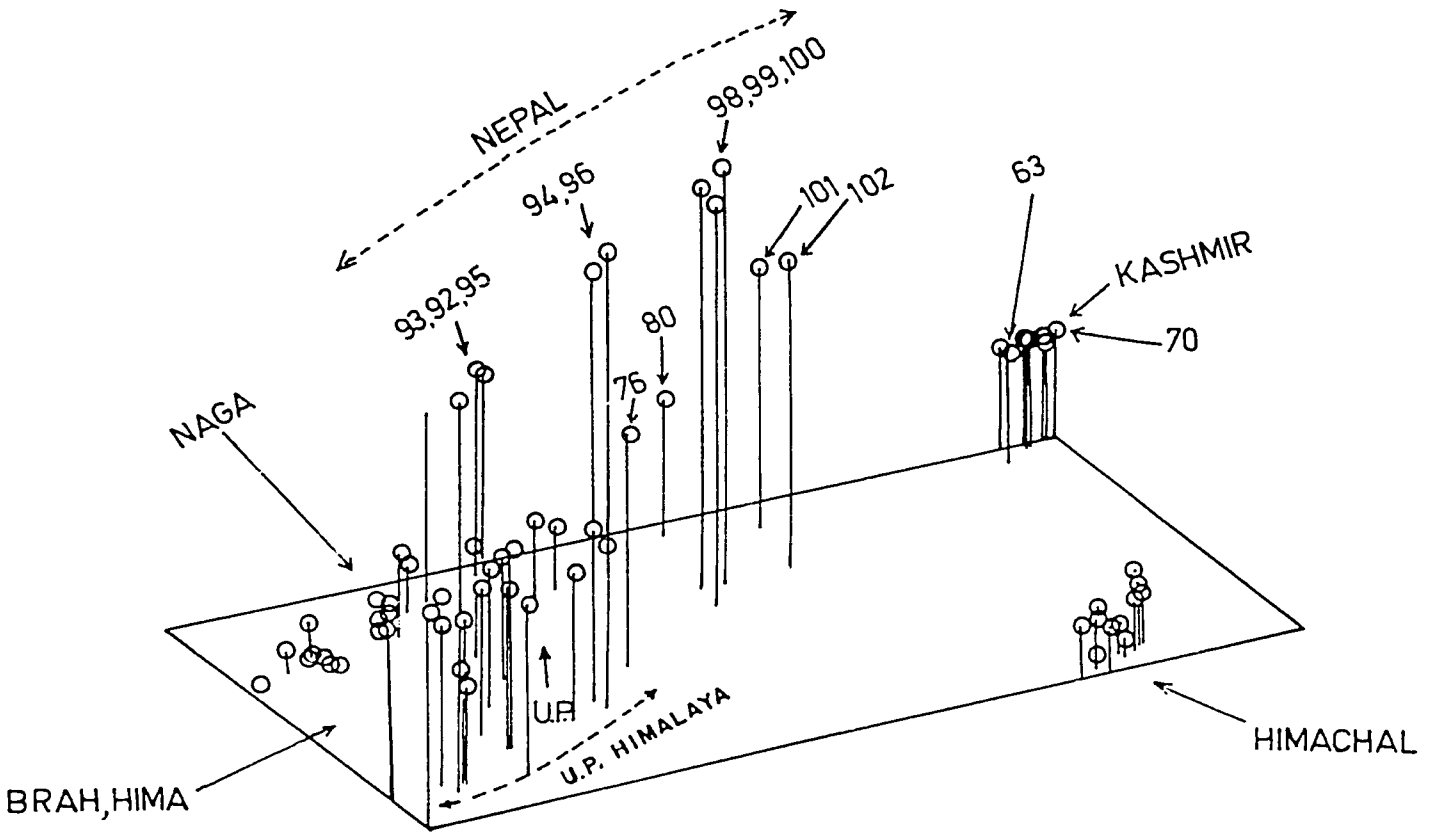

FIGURE 1. BIOMETRIC GROUPS OF HIMALAYAN APIS CERANA (66 Localities).

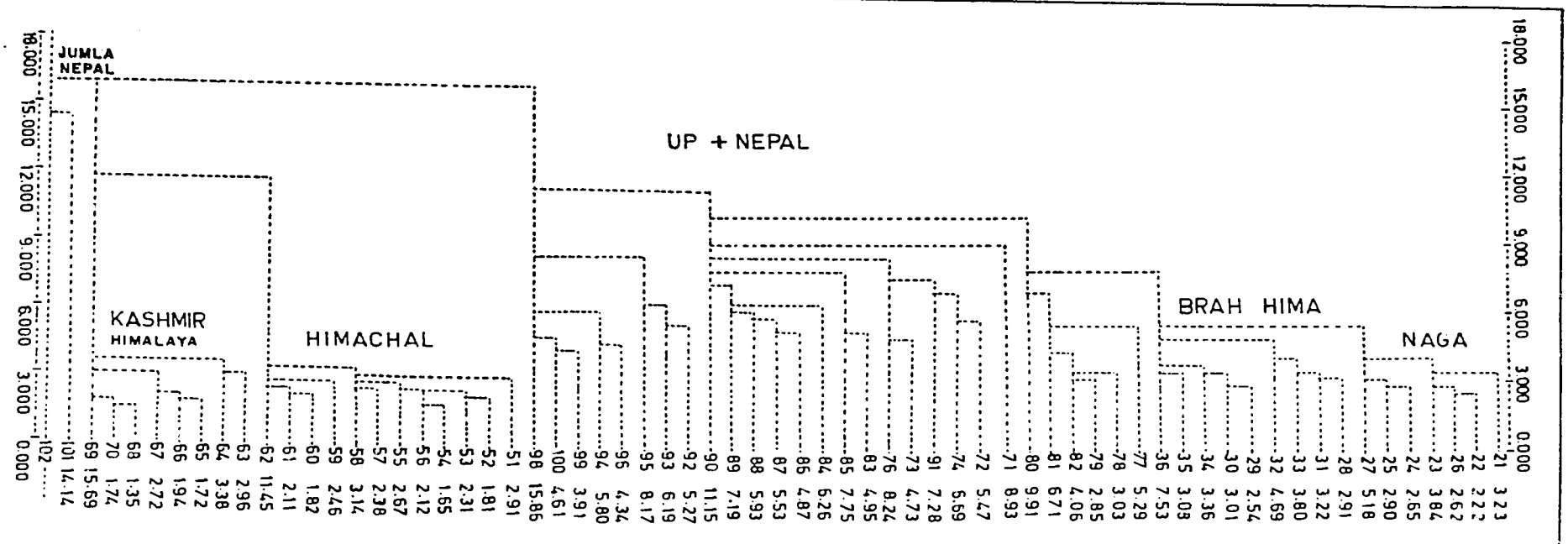

FIGURE 2. PHENOGRAM SHOWING BIOMETRIC RELATIONSHIP OF APIS CERANA IN HIMALAYAN REGION.

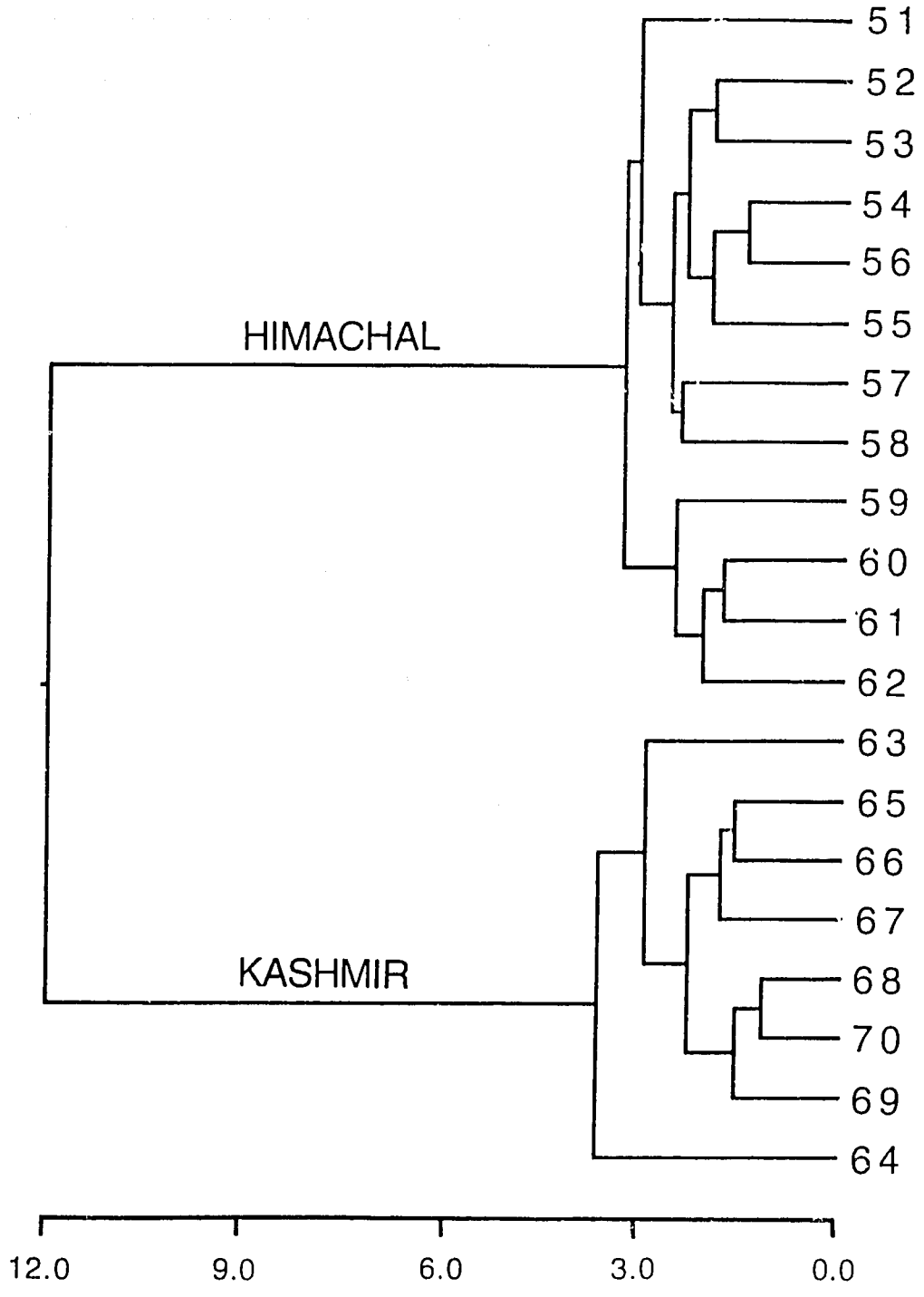

FIGURE 3. PHENOGRAM SHOWING BIOMETRIC RELATIONSHIP OF APIS CERANA IN NORTHWEST HIMALAYAN REGION (KASHMIR AND HIMACHAL).

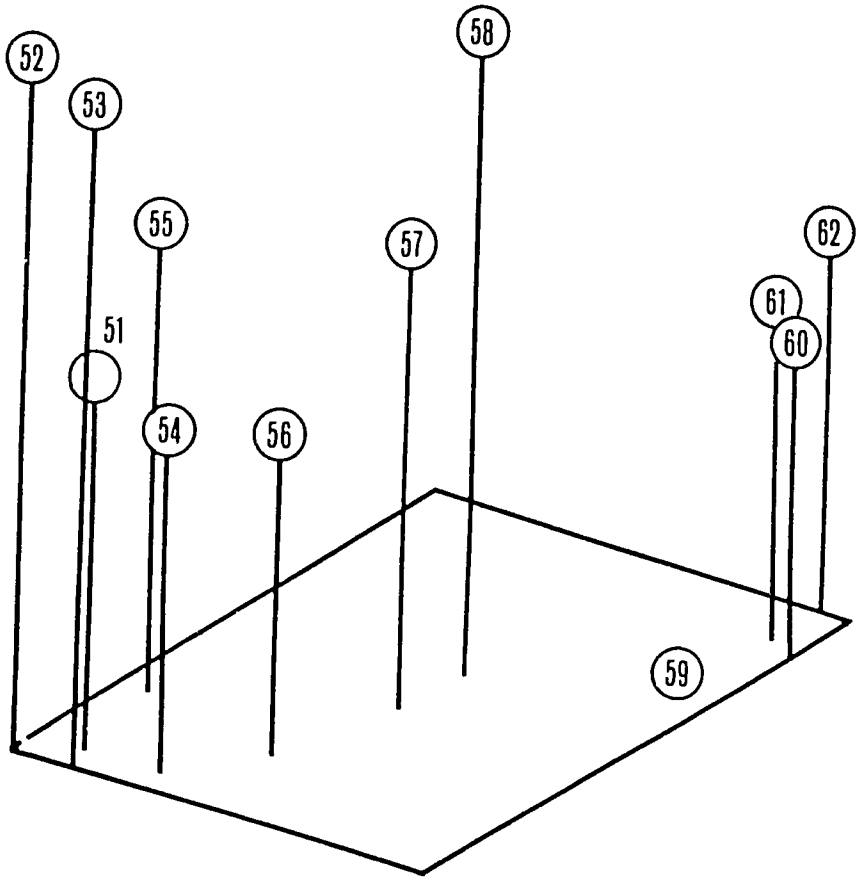

FIGURE 4. THREE-DIMENSIONAL VIEW OF THE BIOMETRIC RELATIONSHIP OF BEES FROM 12 LOCALITIES OF HIMACHAL.

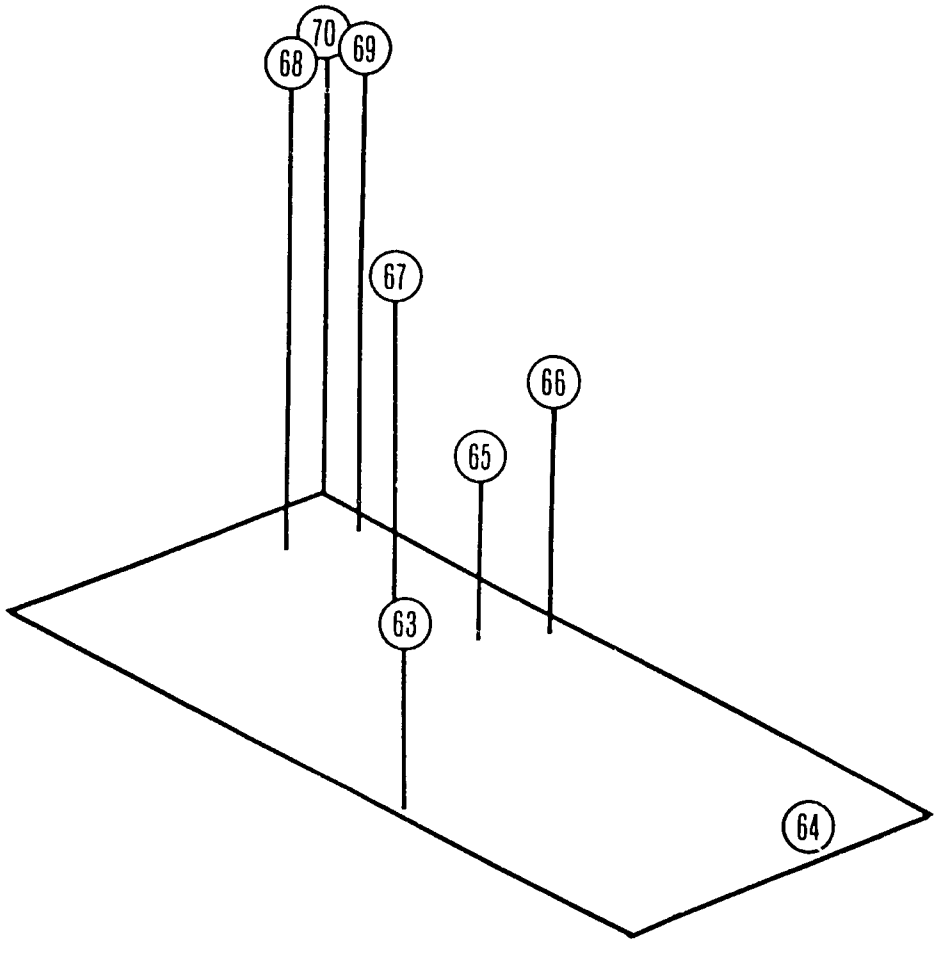

FIGURE 5. THREE-DIMENSIONAL VIEW OF THE BIOMETRIC RELATIONSHIP OF BEES FROM 8 LOCALITIES OF KASHMIR.

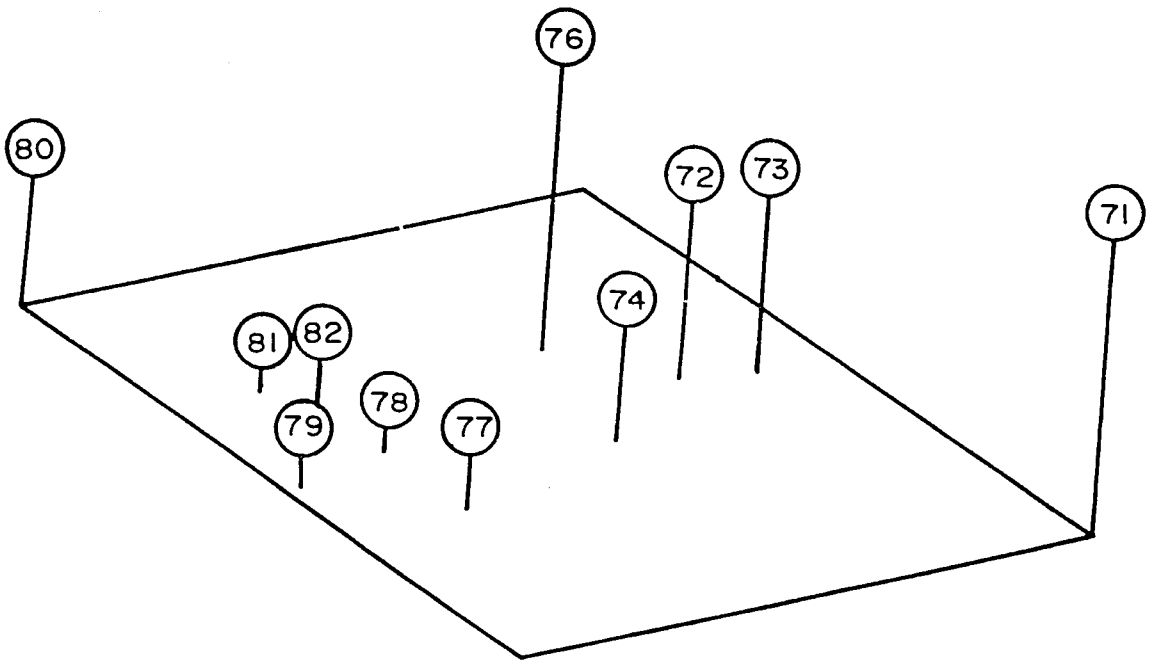

FIGURE 6. THREE-DIMENSIONAL VIEW OF THE BIOMETRIC RELATIONSHIP OF BEES FROM 12 LOCALITIES OF UTTAR PRADESH.

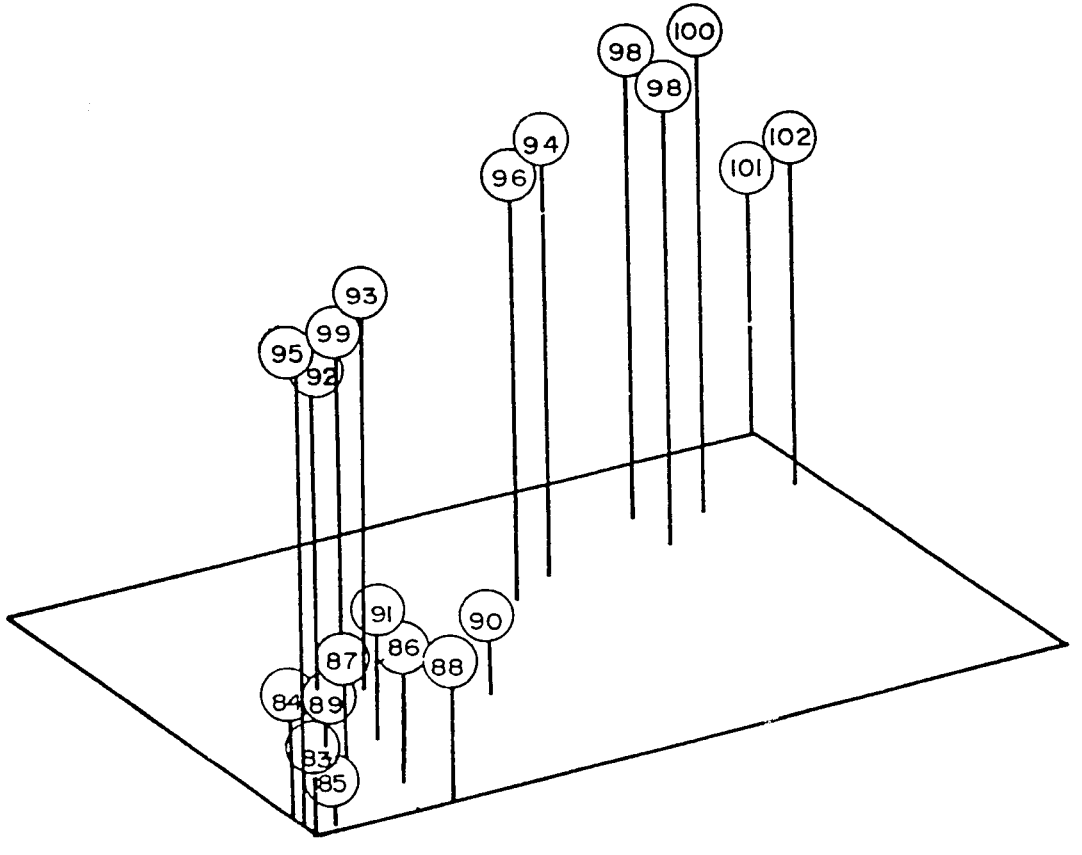

FIGURE 7. THREE-DIMENSIONAL VIEW OF THE BIOMETRIC RELATIONSHIP OF BEES FROM 20 LOCALITIES OF NEPAL.

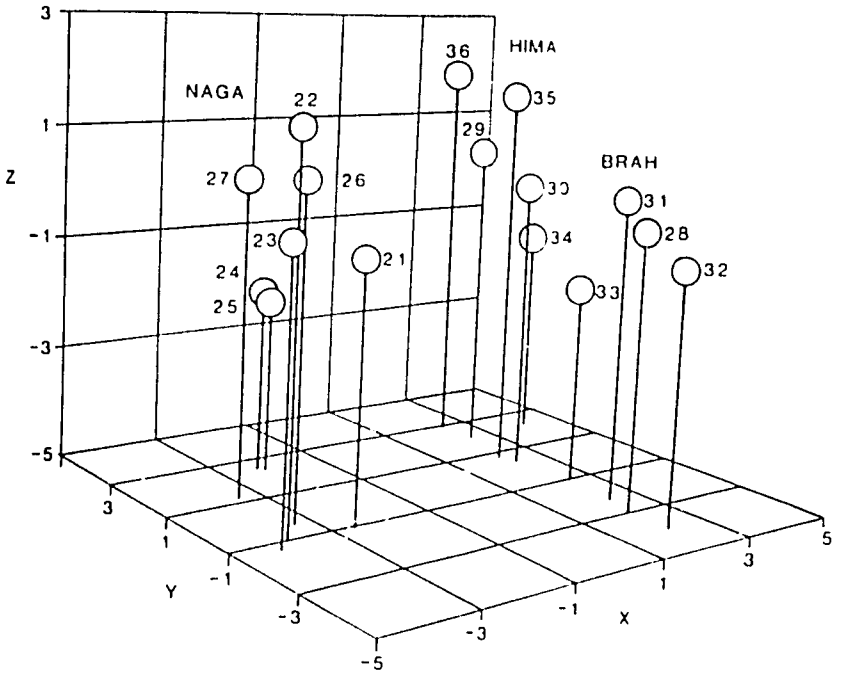

FIGURE 8. THREE-DIMENSIONAL VIEW OF THE BIOMETRIC RELATIONSHIP OF BEES FROM 16 LOCALITIES OF NORTHEAST HIMALAYAS.

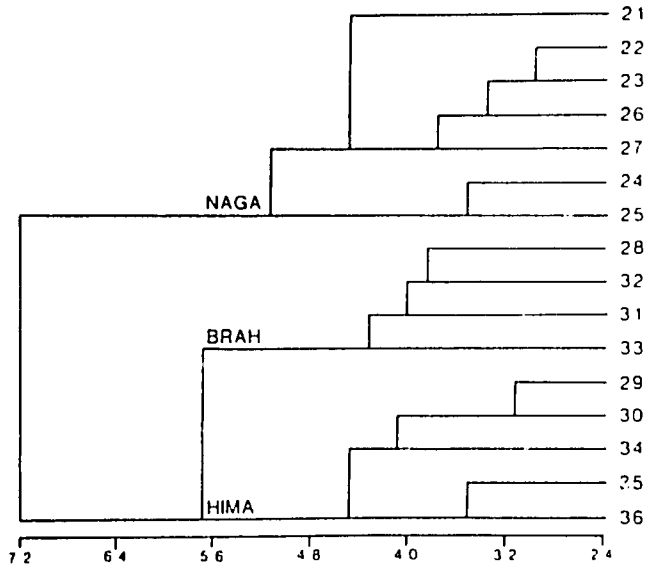

FIGURE 9. PHENOGRAM FROM UPGMA CLUSTER ANALYSIS OF DISTANCES BETWEEN CENTROIDS REPRESENTING 16 LOCALITIES OF NORTHEAST HIMALAYA.

5c. Mitochondrial DNA Research

PURPOSE:

1. Identify & inventory *A. cerana* samples for the ICIMOD Mountain Bee Project.

2. Do a Total Nucleic Extraction of a random *cerana* sample. Perform single digests with the standard 15 enzymes (Acc I, Ava I, Bcl I, Bgl II, EcoR I, EcoR V, Hinc II, Hind III, Hinf I, Nde I, Pst I, Pvu II, Spe I, Xba I, Xho I) to determine which enzymes cut the *cerana* mtDNA at more than one site. Determine what the molecular weights of the cuts are.

3. Extract mitochondrial DNA (mtDNA) from all the ICIMOD *A. cerana* samples. Perform single digests with the 5 selected enzymes (Bcl I, Bgl II, EcoR I, Hind III, Hinf I).

4. Perform double digests using the selected enzymes to determine cutting sites based on data gathered from single digests.

5. Analyze the ICIMOD *A. cerana* samples to detect frequencies of variation in the mtDNA banding patterns for each sample/enzyme.

PROGRESS:

July 30, 1992 - We started the first Total Nucleic Extractions of *A. cerana* samples brought back by Ben Oldroyd from Nepal. We followed an established protocol (HBB-TNE #8) commonly followed by personnel at this lab, using 4 bees per sample instead of the usual 3. We extracted DNA from 99 ICIMOD *cerana* samples. The samples were identified by the label inside the aluminum foil packet, and included a number we added after the location to identify specific samples from each location (i.e. Kathmandu-6, Ghughuti-2, etc). If there was any other information such as a collection date it was included to further identify the sample.

August 11, 1992 - Random samples were digested with the enzyme *EcoR I*, run on 30 lane 1% agarose gels, then stained with Ethidium Bromide. Placed on the UV light table we were able to determine that we had mitochondrial DNA bands, and the integrity of the samples was intact.

August 17, 1992 - An extraction was carried out on an *A. cerana* sample from Thailand to accumulate bulk mtDNA. This mtDNA was used to perform an enzyme survey to determine which enzymes would cut *A. cerana* mtDNA. Once this information was acquired, 4-5 enzymes were selected to use as the comparison enzymes in determining the differences in the ICIMOD *A. cerana* mtDNA banding patterns.

August 18, 1992 - 14 digestion enzymes were used to digest the sample of bulk *A. cerana* mtDNA for our survey. The enzymes used were: Ava I, Bcl I, Bgl II, EcoR V, Hinc II, Hind III, Hinf I, Nde I, Pst I, Pvu II, Spe I, Xba I. The enzymes that showed more than one "band" were: Bgl II (3), EcoO 109 (3), EcoR I (5), Hinc II (2), Hind III (2), Hinf I (5), Nde I (3).

November 5, 1992 to March 15, 1993 - Following a 2½ month hiatus (collection trip to Italy and to assist Oldroyd in finishing his 'Task Specialization' data collection), we started an assembly line of single digestions and electrophoresis of the 99 samples with each of the 5 selected enzymes (Bcl I, Bgl II, EcoR I, Hinf I, Hind III). It was necessary to repeat some extractions on certain samples to try and get digestible mtDNA. We processed and scored approximately 550 single digestions through the middle March 1993.

April 15, 1993 - After returning from a trip to Africa and Brazil, we performed an isozyme survey using MDH, PGM and Hexokinase on all 99 samples. We also made one last attempt to extract and digest mtDNA for the samples missing single enzyme data.

May 18, 1993 - We scored the samples by individual enzyme mtDNA banding patterns to determine common and variant bands. After determining each pattern, a few samples containing the most common pattern were combined and used as 'bulk mtDNA' for double digests to create a mtDNA map. A few samples containing each of the variant patterns were combined and used as 'bulk mtDNA' for double digests to compare with the common

mtDNA map. The mtDNA from the double digests was then transferred (Southern transfer) to nitro-cellulose membranes for probing and visualizing on auto-radiographs. These membranes were sent to W. Sheppard in Beltsville for the probing and auto-radiography.

July 15, 1993 - Following the return of the auto-rads, they were digitized to accurately determine the double digest molecular weights of each mtDNA band. Utilizing the molecular weights for each band/enzyme, the a common mtDNA map is being created. Then the variant patterns will be compared to the common mtDNA map.

The following is a list of the samples, extraction date and extraction lot, and collection information:

SAMPLE ID	EXT-DATE	EXT-LOT	COMMENTS
AMBALA-01	07/31/92	920731-B	(small sample)
AMBALA-02	08/03/92	920803	
AMBALA-03	08/07/92	920807	
BHIUNALA-01	07/31/92	920731-B	COLL 09/25/91
BHIUNALA-02	07/31/92	920731-B	(small sample)
BHIUNALA-03	08/06/92	920806-A	COLL 09/25/91
BHIUNALA-4	08/11/92	920811	COLL 09/25/91
BHUGHUTI-01	07/31/92	920731-B	COLL 09/22/91 (alcohol?)

BIJAYANAGAR-1	08/05/92	920805	COLL 09/27/91
BUMRAMADI-01	08/03/92	920803	COLL 09/24/91
BUMRAMADI-02	08/06/92	920806-A	COLL 09/24/91
BUMRAMADI-03	08/06/92	920806-B	COLL 09/24/91
BUMRAMADI-04	08/10/92	920810-A	COLL 09/24/91
DEWALADANDA	07/30/92	920730	COLL 09/22/91
GHUGHUTI-01	08/04/92	920804-B	COLL 09/22/91
GHUGHUTI-02	08/06/92	920806-B	COLL 09/22/91
GHUGHUTI-03	08/10/92	920810-A	
GHUGHUTI-04	08/10/92	920810-B	COLL 09/22/91
KANG RA#5	07/31/92	920731-A	
KANGIRA-02	08/04/92	920804-B	
KANGRA-01	08/05/92	920805	
KANGRA-03	08/10/92	920810-A	
KANGRA-04	08/06/92	920806-A	
KATHMANDU	07/30/92	920730	COLL 01/01/92
KATHMANDU-01	07/31/92	920731-A	COLL 01/16/92
KATHMANDU-02	07/31/92	920731-A	COLL 01/16/92
KATHMANDU-03	07/31/92	920731-A	COLL 01/16/92
KATHMANDU-04	07/31/92	920731-B	COLL 01/06/92
KATHMANDU-05	08/03/92	920803	COLL 01/06/92
KATHMANDU-06	08/04/92	920804-A	COLL 01/06/92

KATHMANDU-07	08/04/92	920804-B	COLL 01/16/92
KATHMANDU-08	08/05/92	920805	COLL 01/16/92
KATHMANDU-09	08/05/92	920805	COLL 01/16/92
KATHMANDU-10	08/05/92	920805	COLL 01/16/92
KATHMANDU-11	09/06/92	920806-A	COLL 01/16/92
KATHMANDU-12	08/06/92	920806-B	COLL 01/16/92
KATHMANDU-13	08/06/92	920806-B	COLL 01/16/92
KATHMANDU-14	08/06/92	920806-B	COLL 01/16/92
KATHMANDU-15	08/10/92	920810-A	COLL 01/16/92
KATHMANDU-16	08/10/92	920810-B	COLL 01/16/92
KATHMANDU-17	08/10/92	920810-B	COLL 01/16/92
KUNIHAR-01	08/04/92	920804-A	
KUNIHAR-02	08/04/92	920804-B	
KUNIHAR-03	08/05/92	920805	
KUNIHAR-04	08/05/92	920805	
KUNIHAR-05	08/10/92	920810-B	
NO TAG-01	08/04/92	920804-A	(no identification tag)
NURPUR I-02	08/06/92	920806-A	
NURPUR-01	07/31/92	920731-B	
NURPUR-02	08/06/92	920806-A	
NURPUR-03	08/10/92	920810-A	
NURPUR-HP	08/07/92	920807	

PATANKOT-01	07/30/92	920730
PATANKOT-02	08/03/92	920803
PATANKOT-03	08/10/92	920810-A
PATANKOT-04	08/10/92	920810-B
PUNE-01	07/30/92	920730
PUNE-02	07/31/92	920731-A
PUNE-03	08/03/92	920803
PUNE-04	08/03/92	920803
PUNE-05	08/03/92	920803
PUNE-06	08/04/92	920804-A
PUNE-07	08/04/92	920804-A
PUNE-08	08/04/92	920804-A
PUNE-09	08/04/92	920804-B
PUNE-10	08/04/92	920804-B
PUNE-11	08/04/92	920804-B
PUNE-12	08/06/92	920806-A
PUNE-13	08/06/92	920806-B
PUNE-14	08/06/92	920806-B
PUNE-15	08/06/92	920806-B
PUNE-16	08/07/92	920807
PUNE-17	08/07/92	920807
PUNE-18	08/10/92	920810-A

PUNE-19	08/10/92	920810-B	
RIYA-01	07/30/92	920730	COLL 09/23/91
RIYA-02	08/04/92	920804-B	COLL 09/23/91
SABATHU-01	07/31/92	920731-A	
SABATHU-02	07/31/92	920731-B	
SABATHU-03	08/04/92	920804-A	
SABATHU-04	08/06/92	920806-A	
SABATHU-05	08/07/92	920807	
SABATHU-06	08/07/92	920807	
SABATHU-07	08/07/92	920807	
SABATHU-08	08/10/92	920810-B	
SABATHU-9	08/11/92	920811	
SHIMLA-01	07/30/92	920730	
SHIMLA-02	07/30/92	920730	
SHIMLA-03	07/31/92	920731-A	
SHIMLA-04	07/31/92	920731-A	
SHIMLA-05	07/31/92	920731-B	
SHIMLA-06	08/03/92	920803	
SHIMLA-07	08/04/92	920804-A	
SHIMLA-08	08/05/92	920805	
SHIMLA-09	08/07/92	920807	
SHIMLA-10	08/10/92	920810-B	

SHIMLA-11	08/11/92	920811	
SING RIYA-01	07/30/92	920730	COLL 09/23/91
SING RIYA-02	08/10/92	920810-A	

Table 1. Frequency and variation of the banding patterns in the three different regions. A = primary pattern, B = secondary pattern. The order and molecular weight for each pattern are:

EcoR I - A = 5630, 3477, 3140, 2007, 1746

B = 5622, 5092, 3429, 1987

Bcl I - A = 8834, 4955, 2693

B = 6850, 4237, 3748, 2682

Bgl II - A = 10993, 5391, 4043

B = 14367, 4043

Hind III and Hinf I showed no variation between samples or regions so are not included in the table.

REGION	AAA	AAB	ABA	BAA	BAB
HIGH	71.43%	7.14%	0	0	21.43%
MIDDLE	81.25%	12.50%	6.25%	0	0
LOW	78.57%	0	7.14%	14.29%	0

Table 2. Frequency and variation of the allozymes in the three different regions. MDH = Malate-dehydroginase, HEX = Hexokinase, PGM = Phosphoglucomutase.

MDH:

REGION	0234	0004
HIGH	0	31.25%
MIDDLE	1.04%	35.42%
LOW	1.04%	31.25%

HEX:

REGION	10	12	02
HIGH	0	4.60%	28.74%
MIDDLE	0	14.94%	25.29%
LOW	2.30%	9.20%	14.94%

PGM:

REGION	100	120	123	020	023
HIGH	0	5.38%	4.30%	2.15%	20.43%
MIDDLE	22.58%	0	8.60%	6.45%	22.58%
LOW	12.90%	11.83%	1.08%	0	12.90%

RESULTS OF mtDNA AND ALLOZYME ANALYSIS - A (.) represents missing data

Region-Field code	EcoR I	Bcl I	Bgl II	HEX	MDH	PGM
L AMBALA-01	B	A	A	1/2	0/0/0/4	0/2/3
L AMBALA-02	.	A	A	0/2	0/0/0/4	1/2/0
L AMBALA-03	B	A	A	1/2	0/0/0/4	1/2/3
H BHIUNALA-01	B	A	B	0/2	0/0/0/4	0/2/3
H BHIUNALA-02	B	A	B	0/2	0/0/0/4	0/2/3
H BHIUNALA-03	B	A	B	0/2	0/0/0/4	1/2/0
H BHIUNALA-04	A	A	B	0/2	0/0/0/4	1/2/3
H BHUGHUTI-01	A	A	A	.	0/0/0/4	0/2/3
H BIJAYANA GAR-1	A	A	.	0/2	0/0/0/4	1/2/3
H BUMRAMADI-01	A	A	A	0/2	0/0/0/4	0/2/3
H BUMRAMADI-02	A	A	A	0/2	0/0/0/4	1/2/0

H BUMRAMADI-03	B	A	B	0/2	0/0/0/4	0/2/3
H BUMRAMADI-04	A	A	B	0/2	0/0/0/4	0/2/3
H DEWALA DANDA-01	B	A	.	1/2	0/0/0/4	0/2/0
H GHUGHUTI-01	A	A	A	0/2	0/0/0/4.	0/2/3
H GHUGHUTI-02	A	A	A	0/2	0/0/0/4	1/2/0
H GHUGHUTI-03	A	A	A	0/2	0/0/0/4	0/2/3
H GHUGHUTI-04	A	A	A	0/2	0/0/0/4	0/2/3
M KANGRA-01	A	A	B	0/2	0/0/0/4	0/2/3
M KANGRA-02	A	A	A	0/2	0/2/3/4	0/2/0
M KANGRA-03	A	A	A	1/2	0/0/0/4	0/2/3
M KANGRA-04	A	A	.	.	.	.
M KANGRA-05	A	A	A	0/2	0/0/0/4	0/2/3
M KATHMANDU	A	A	A	1/2	0/0/0/4	1/2/3
M KATHMANDU-01	A	A	.	.	.	.
M KATHMANDU-02	A	A	A	1/2	0/0/0/4	1/2/3
M KATHMANDU-03	A	A	A	1/2	0/0/0/4	0/2/0
M KATHMANDU-04	A	A	A	1/2	0/0/0/4	0/2/3
M KATHMANDU-05	A	A	A	0/2	0/0/0/4	0/2/3
M KATHMANDU-06	A	A	A	0/2	0/0/0/4	0/2/0
M KATHMANDU-07	A	A	A	1/2	0/0/0/4	1/2/3
M KATHMANDU-08	A	A	.	0/2	0/0/0/4	0/2/3
M KATHMANDU-09	A	A	A	1/2	0/0/0/4	0/2/3

M KATHMANDU-10	A	A	A	1/2	0/0/0/4	0/2/3
M KATHMANDU-11	A	A	A	1/2	0/0/0/4	1/2/3
M KATHMANDU-12	A	A	A	0/2	0/0/0/4	0/2/3
M KATHMANDU-13	A	A	A	1/2	0/0/0/4	1/2/3
M KATHMANDU-14	A	A	A	1/2	0/0/0/4	0/2/0
M KATHMANDU-15	A	A	A	0/2	0/0/0/4	0/2/0
M KATHMANDU-16	A	B	A	0/2	0/0/0/4	0/2/3
M KATHMANDU-17	A	B	A	0/2	0/0/0/4	0/2/3
M KUNIHAR-01	A	A	A	0/2	0/0/0/4	0/2/3
M KUNIHAR-02	A	A	A	1/2	0/0/0/4	0/2/3
M KUNIHAR-03	A	A	A	0/2	0/0/0/4	0/2/3
M KUNIHAR-04	A	A	A	0/2	0/0/0/4	0/2/0
M KUNIHAR-05	.	A	A	1/2	0/0/0/4	1/2/3
NO TAG-01	.	A	B	0/2	0/0/0/4	0/2/3
L NURPUR I-02	A	A	A	0/2	0/0/0/4	0/2/3
L NURPUR-01	B	A	A	0/2	0/0/0/4	0/2/3
L NURPUR-02	A	A	A	1/2	0/0/0/4	0/2/3
L NURPUR-03	A	A	A	1/2	0/0/0/4	0/2/3
L NURPUR-HP	A	A	A	0/2	0/0/0/4	0/2/3
L PATANKOT-01	A	B	A	0/2	0/0/0/4	0/2/3
L PATANKOT-02	A	A	A	.	0/0/0/4	.
L PATANKOT-03	A	A	A	0/2	0/0/0/4	0/2/3

L PATANKOT-04	A	A	A	.	0/0/0/4	0/2/3
L PUNE-01	A	A	A	0/2	0/0/0/4	0/2/3
L PUNE-02	A	A	A	0/2	0/0/0/4	1/2/0
L PUNE-03	A	A	A	1/2	0/0/0/4.	1/2/0
L PUNE-04	A	A	A	1/0	0/0/0/4	1/2/0
L PUNE-05	A	A	A	0/2	0/0/0/4	1/0/0
L PUNE-06	A	A	A	1/2	0/0/0/4	1/2/0
L PUNE-07	A	A	A	1/2	0/0/0/4	1/2/0
L PUNE-08	A	A	A	1/0	0/0/0/4	1/2/0
L PUNE-09	A	A	A	.	0/0/0/4	.
L PUNE-10	A	A	A	.	0/0/0/4	.
L PUNE-11	A	A	A	1/2	0/0/0/4	1/0/0
L PUNE-12	A	A	A	.	0/0/0/4	1/0/0
L PUNE-13	A	A	A	.	0/0/0/4	1/0/0
L PUNE-14	A	A	A	0/2	0/0/0/4	1/2/0
L PUNE-15	A	A	A	0/2	0/0/0/4	1/2/0
L PUNE-16	A	A	.	0/2	0/2/3/4	0/2/3
L PUNE-17	A	A	A	.	0/0/0/4	1/2/0
L PUNE-18	A	.	A	.	0/0/0/4	0/2/3
L PUNE-19	A	A	A	0/2	0/0/0/4	1/2/0
H RIYA-01	B	A	B	0/2	0/0/0/4	0/2/3
H RIYA-02	B	A	B	1/2	0/0/0/4	0/2/3

M SABATHU-01	A	B	A	0/2	0/0/0/4	1/2/3
M SABATHU-02	A	A	B	0/2	0/0/0/4	1/2/3
M SABATHU-03	A	A	B	0/2	0/0/0/4	0/2/3
M SABATHU-04	A	A	A	0/2	0/0/0/4.	0/2/3
M SABATHU-05	A	A	A	0/2	0/0/0/4	0/2/3
M SABATHU-06	A	A	A	0/2	0/0/0/4	0/2/3
M SABATHU-07	A	A	A	0/2	0/0/0/4	0/2/3
M SABATHU-08	A	A	.	0/2	0/0/0/4	0/2/3
M SABATHU-09	A	A	B	0/2	0/0/0/4	0/2/3
H SHIMLA-01	A	A	A	0/2	0/0/0/4	1/2/0
H SHIMLA-02	A	A	A	0/2	0/0/0/4	1/2/3
H SHIMLA-03	A	A	A	0/2	0/0/0/4	1/2/3
H SHIMLA-04	A	A	A	0/2	0/0/0/4	0/2/3
H SHIMLA-05	A	A	A	1/2	0/0/0/4	0/2/3
H SHIMLA-06	A	A	A	0/2	0/0/0/4	0/2/3
H SHIMLA-07	A	A	A	0/2	0/0/0/4	0/2/3
H SHIMLA-08	A	A	A	0/2	0/0/0/4	0/2/0
H SHIMLA-09	A	A	A	1/2	0/0/0/4	1/2/0
H SHIMLA-10	A	A	A	0/2	0/0/0/4	0/2/3
H SHIMLA-11	A	A	A	0/2	0/0/0/4	0/2/3
H SING RIYA-01	A	A	A	0/2	0/0/0/4	0/2/3
H SING RIYA-02	A	A	A	0/2	0/0/0/4	0/2/3

ICIMOD
ENZYME PATTERNS BY REGION

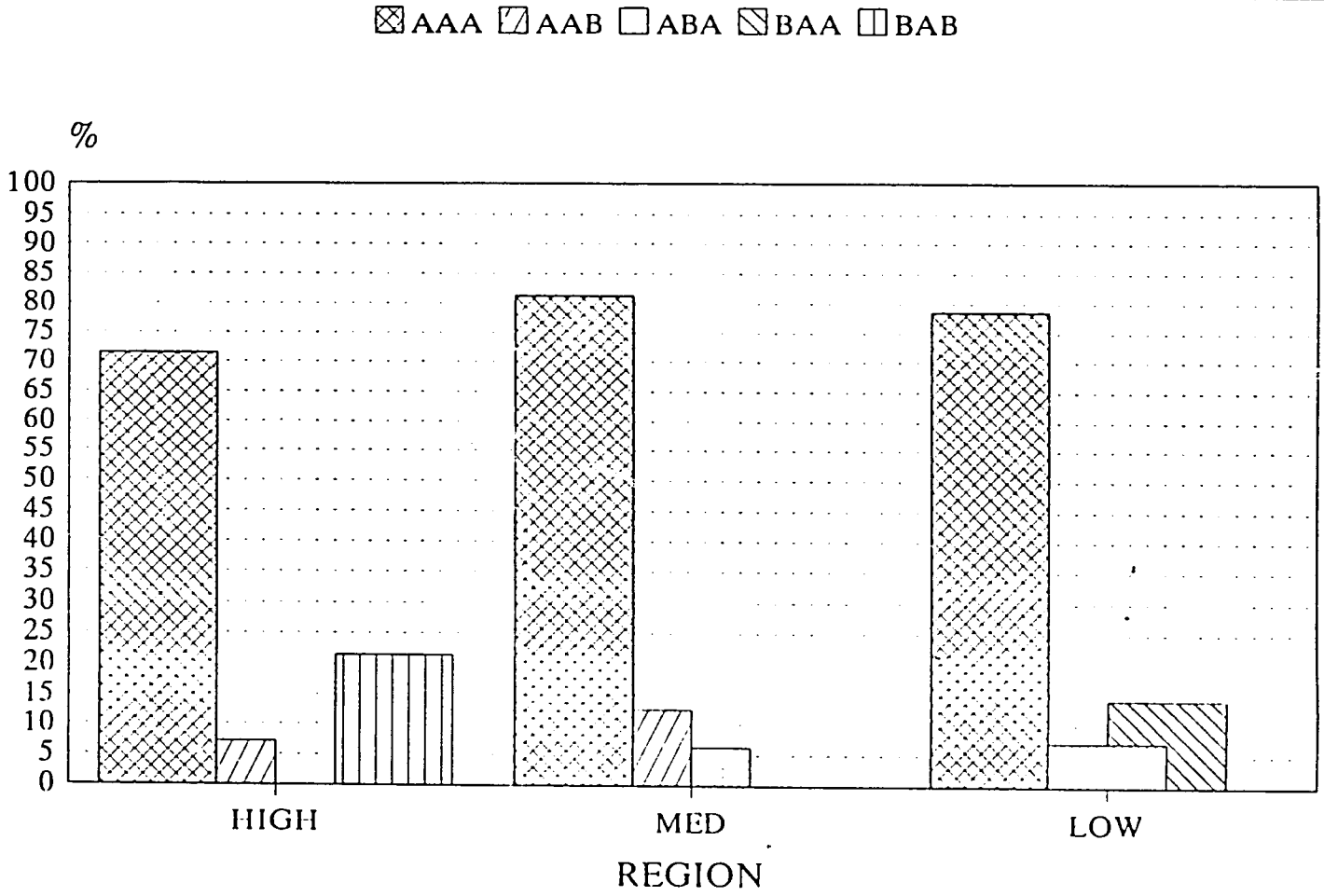

A = primary pattern, B = deviant pattern
Enzyme order: EcoR I, Bcl I, Bgl II

TABLE OF REG BY ENZ

REG	ENZ					
Frequency Percent Row Pct Col Pct	AAA	AAB	ABA	BAA	BAB	Total
H	10 22.73 71.43 29.41	1 2.27 7.14 33.33	0 0.00 0.00 0.00	0 0.00 0.00 0.00	3 6.82 21.43 100.00	14 31.82
Total	34 77.27	3 6.82	2 4.55	2 4.55	3 6.82	44 100.00

TABLE OF REG BY ENZ

REG	ENZ					
Frequency Percent Row Pct Col Pct	AAA	AAB	ABA	BAA	BAB	Total
M	13 29.55 81.25 38.24	2 4.55 12.50 66.67	1 2.27 6.25 50.00	0 0.00 0.00 0.00	0 0.00 0.00 0.00	16 36.36
Total	34 77.27	3 6.82	2 4.55	2 4.55	3 6.82	44 100.00

TABLE OF REG BY ENZ

REG	ENZ					
Frequency Percent Row Pct Col Pct	AAA	AAB	ABA	BAA	BAB	Total
L	11 25.00 78.57 32.35	0 0.00 0.00 0.00	1 2.27 7.14 50.00	2 4.55 14.29 100.00	0 0.00 0.00 0.00	14 31.82
Total	34 77.27	3 6.82	2 4.55	2 4.55	3 6.82	44 100.00

TABLE OF SITE BY ENZ

SITE ENZ

Frequency Percent Row Pct Col Pct	AAA	AAB	ABA	BAA	BAB	Total
AMBALA 1	0 0.00 0.00 0.00	0 0.00 0.00 0.00	0 0.00 0.00 0.00	2 2.27 100.00 66.67	0 0.00 0.00 0.00	2 2.27
Total	69 78.41	6 6.82	4 4.55	3 3.41	6 6.82	88 100.00

TABLE OF SITE BY ENZ

SITE ENZ

Frequency Percent Row Pct Col Pct	AAA	AAB	ABA	BAA	BAB	Total
BHIUNA 2	0 0.00 0.00 0.00	1 1.14 25.00 16.67	0 0.00 0.00 0.00	0 0.00 0.00 0.00	3 3.41 75.00 50.00	4 4.55
Total	69 78.41	6 6.82	4 4.55	3 3.41	6 6.82	88 100.00

TABLE OF SITE BY ENZ

SITE ENZ

Frequency Percent Row Pct Col Pct	AAA	AAB	ABA	BAA	BAB	Total
BHUGHU 3	1 1.14 100.00 1.45	0 0.00 0.00 0.00	0 0.00 0.00 0.00	0 0.00 0.00 0.00	0 0.00 0.00 0.00	1 1.14
Total	69 78.41	6 6.82	4 4.55	3 3.41	6 6.82	88 100.00

TABLE OF SITE BY ENZ

SITE ENZ

Frequency Percent Row Pct Col Pct	AAA	AAB	ABA	BAA	BAB	Total
BUMRAM 4	2 2.27 50.00 2.90	1 1.14 25.00 16.67	0 0.00 0.00 0.00	0 0.00 0.00 0.00	1 1.14 25.00 16.67	4 4.55
Total	69 78.41	6 6.82	4 4.55	3 3.41	6 6.82	88 100.00

TABLE OF SITE BY ENZ

SITE ENZ

Frequency Percent Row Pct Col Pct	AAA	AAB	ABA	BAA	BAB	Total
GHUGHU 5	4 4.55 100.00 5.80	0 0.00 0.00 0.00	0 0.00 0.00 0.00	0 0.00 0.00 0.00	0 0.00 0.00 0.00	4 4.55
Total	69 78.41	6 6.82	4 4.55	3 3.41	6 6.82	88 100.00

TABLE OF SITE BY ENZ

SITE ENZ

Frequency Percent Row Pct Col Pct	AAA	AAB	ABA	BAA	BAB	Total
KANGRA 6	3 3.41 75.00 4.35	1 1.14 25.00 16.67	0 0.00 0.00 0.00	0 0.00 0.00 0.00	0 0.00 0.00 0.00	4 4.55
Total	69 78.41	6 6.82	4 4.55	3 3.41	6 6.82	88 100.00

TABLE OF SITE BY ENZ

SITE ENZ

Frequency Percent Row Pct Col Pct	AAA	AAB	ABA	BAA	BAB	Total
KATHMA 7	14 15.91 87.50 20.29	0 0.00 0.00 0.00	2 2.27 12.50 50.00	0 0.00 0.00 0.00	0 0.00 0.00 0.00	16 18.18
Total	69 78.41	6 6.82	4 4.55	3 3.41	6 6.82	88 100.00

TABLE OF SITE BY ENZ

SITE ENZ

Frequency Percent Row Pct Col Pct	AAA	AAB	ABA	BAA	BAB	Total
KUNIHA 8	4 4.55 100.00 5.80	0 0.00 0.00 0.00	0 0.00 0.00 0.00	0 0.00 0.00 0.00	0 0.00 0.00 0.00	4 4.55
Total	69 78.41	6 6.82	4 4.55	3 3.41	6 6.82	88 100.00

TABLE OF SITE BY ENZ

SITE ENZ

Frequency Percent Row Pct Col Pct	AAA	AAB	ABA	BAA	BAB	Total
NURPUR 9	4 4.55 80.00 5.80	0 0.00 0.00 0.00	0 0.00 0.00 0.00	1 1.14 20.00 33.33	0 0.00 0.00 0.00	5 5.68
Total	69 78.41	6 6.82	4 4.55	3 3.41	6 6.82	88 100.00

TABLE OF SITE BY ENZ

SITE	ENZ					
Frequency Percent Row Pct Col Pct	AAA	AAB	ABA	BAA	BAB	Total
PATANK 10	3 3.41 75.00 4.35	0 0.00 0.00 0.00	1 1.14 25.00 25.00	0 0.00 0.00 0.00	0 0.00 0.00 0.00	4 4.55
Total	69 78.41	6 6.82	4 4.55	3 3.41	6 6.82	88 100.00

TABLE OF SITE BY ENZ

SITE	ENZ					
Frequency Percent Row Pct Col Pct	AAA	AAB	ABA	BAA	BAB	Total
PUNE 11	17 19.32 100.00 24.64	0 0.00 0.00 0.00	0 0.00 0.00 0.00	0 0.00 0.00 0.00	0 0.00 0.00 0.00	17 19.32
Total	69 78.41	6 6.82	4 4.55	3 3.41	6 6.82	88 100.00

TABLE OF SITE BY ENZ

SITE	ENZ					
Frequency Percent Row Pct Col Pct	AAA	AAB	ABA	BAA	BAB	Total
RIYA 12	0 0.00 0.00 0.00	0 0.00 0.00 0.00	0 0.00 0.00 0.00	0 0.00 0.00 0.00	2 2.27 100.00 33.33	2 2.27
Total	69 78.41	6 6.82	4 4.55	3 3.41	6 6.82	88 100.00

TABLE OF SITE BY ENZ

SITE ENZ

Frequency Percent Row Pct Col Pct	AAA	AAB	ABA	BAA	BAB	Total
SABATH 13	4 4.55 50.00 5.80	3 3.41 37.50 50.00	1 1.14 12.50 25.00	0 0.00 0.00 0.00	0 0.00 0.00 0.00	8 9.09
Total	69 78.41	6 6.82	4 4.55	3 3.41	6 6.82	88 100.00

TABLE OF SITE BY ENZ

SITE ENZ

Frequency Percent Row Pct Col Pct	AAA	AAB	ABA	BAA	BAB	Total
SHIMLA 14	11 12.50 100.00 15.94	0 0.00 0.00 0.00	0 0.00 0.00 0.00	0 0.00 0.00 0.00	0 0.00 0.00 0.00	11 12.50
Total	69 78.41	6 6.82	4 4.55	3 3.41	6 6.82	88 100.00

TABLE OF SITE BY ENZ

SITE ENZ

Frequency Percent Row Pct Col Pct	AAA	AAB	ABA	BAA	BAB	Total
SING 15	2 2.27 100.00 2.90	0 0.00 0.00 0.00	0 0.00 0.00 0.00	0 0.00 0.00 0.00	0 0.00 0.00 0.00	2 2.27
Total	69 78.41	6 6.82	4 4.55	3 3.41	6 6.82	88 100.00

ICIMOD
MALATEDEHYDROGENASE SCORES BY REGION

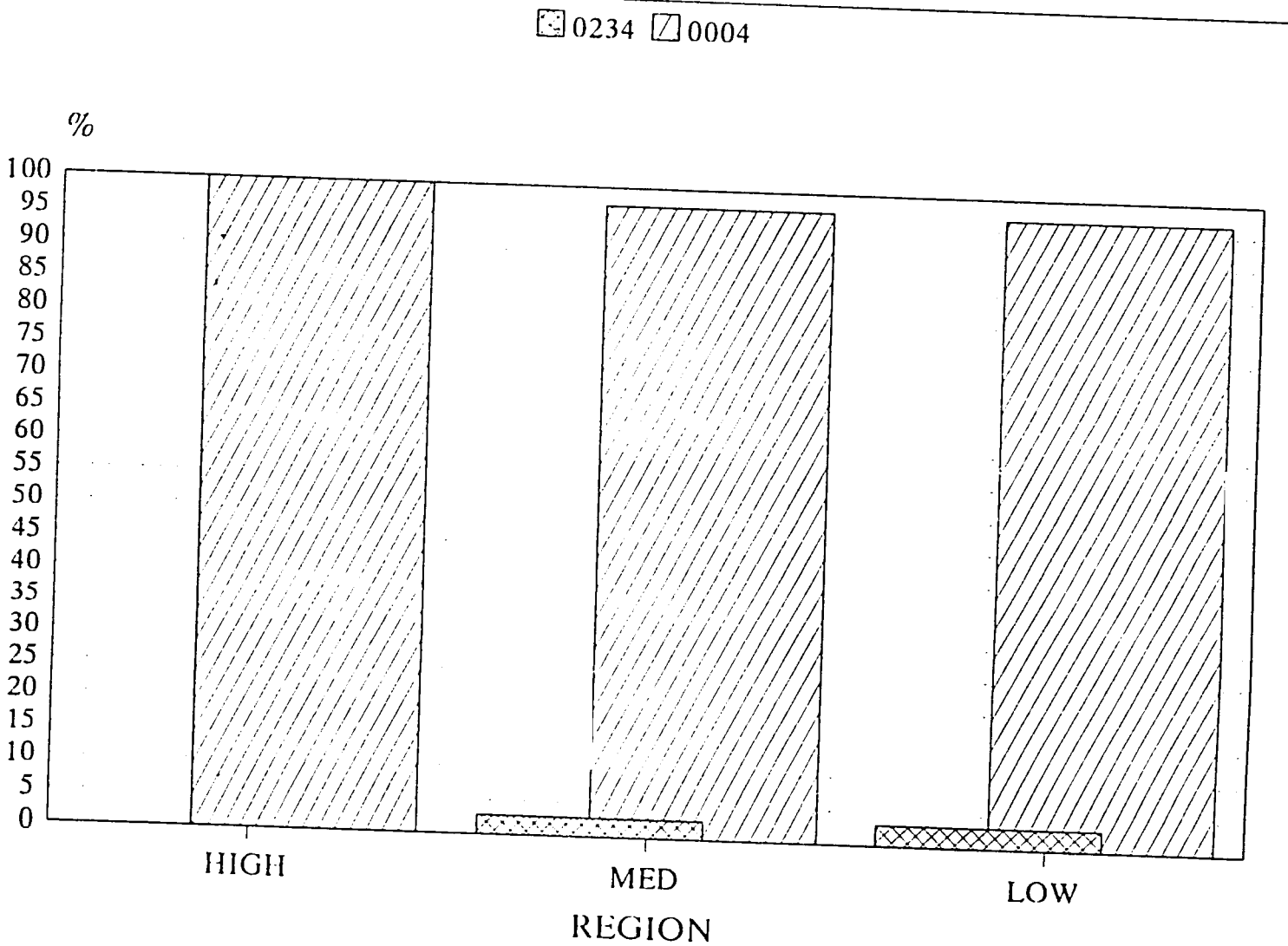

TABLE OF REG BY MDH

REG MDH

Frequency Percent Row Pct Col Pct	4	234	Total
H	30 31.25 100.00 31.91	0 0.00 0.00 0.00	30 31.25
Total	94 97.92	2 2.08	96 100.00

TABLE OF REG BY MDH

REG MDH

Frequency Percent Row Pct Col Pct	4	234	Total
M	34 35.42 97.14 36.17	1 1.04 2.86 50.00	35 36.46
Total	94 97.92	2 2.08	96 100.00

TABLE OF REG BY MDH

REG MDH

Frequency Percent Row Pct Col Pct	4	234	Total
L	30 31.25 96.77 31.91	1 1.04 3.23 50.00	31 32.29
Total	94 97.92	2 2.08	96 100.00

TABLE OF SITE BY MDH

SITE	MDH		
Frequency Percent Row Pct Col Pct	4	234	Total
AMBALA	3 3.12 100.00 3.19	0 0.00 0.00 0.00	3 3.12
Total	94 97.92	2 2.08	96 100.00

TABLE OF SITE BY MDH

SITE	MDH		
Frequency Percent Row Pct Col Pct	4	234	Total
BHIUNA	4 4.17 100.00 4.26	0 0.00 0.00 0.00	4 4.17
Total	94 97.92	2 2.08	96 100.00

TABLE OF SITE BY MDH

SITE	MDH		
Frequency Percent Row Pct Col Pct	4	234	Total
BHUGHU	1 1.04 100.00 1.06	0 0.00 0.00 0.00	1 1.04
Total	94 97.92	2 2.08	96 100.00

TABLE OF SITE BY MDH

SITE MDH

Frequency Percent Row Pct Col Pct	4	234	Total
BIJAYA	1 1.04 100.00 1.06	0 0.00 0.00 0.00	1 1.04
Total	94 97.92	2 2.08	96 100.00

TABLE OF SITE BY MDH

SITE MDH

Frequency Percent Row Pct Col Pct	4	234	Total
BUMRAM	4 4.17 100.00 4.26	0 0.00 0.00 0.00	4 4.17
Total	94 97.92	2 2.08	96 100.00

TABLE OF SITE BY MDH

SITE MDH

Frequency Percent Row Pct Col Pct	4	234	Total
DEWALA	1 1.04 100.00 1.06	0 0.00 0.00 0.00	1 1.04
Total	94 97.92	2 2.08	96 100.00

TABLE OF SITE BY MDH

SITE	MDH		
Frequency Percent Row Pct Col Pct	4	234	Total
GHUGHU	4 4.17 100.00 4.26	0 0.00 0.00 0.00	4 4.17
Total	94 97.92	2 2.08	96 100.00

TABLE OF SITE BY MDH

SITE	MDH		
Frequency Percent Row Pct Col Pct	4	234	Total
KANGRA	3 3.12 75.00 3.19	1 1.04 25.00 50.00	4 4.17
Total	94 97.92	2 2.08	96 100.00

TABLE OF SITE BY MDH

SITE	MDH		
Frequency Percent Row Pct Col Pct	4	234	Total
KATHMA	17 17.71 100.00 18.09	0 0.00 0.00 0.00	17 17.71
Total	94 97.92	2 2.08	96 100.00

TABLE OF SITE BY MDH

SITE MDH

Frequency Percent Row Pct Col Pct	4	234	Total
KUNIHA	5 5.21 100.00 5.32	0 0.00 0.00 0.00	5 5.21
Total	94 97.92	2 2.08	96 100.00

TABLE OF SITE BY MDH

SITE MDH

Frequency Percent Row Pct Col Pct	4	234	Total
NURPUR	5 5.21 100.00 5.32	0 0.00 0.00 0.00	5 5.21
Total	94 97.92	2 2.08	96 100.00

TABLE OF SITE BY MDH

SITE MDH

Frequency Percent Row Pct Col Pct	4	234	Total
PATANK	4 4.17 100.00 4.26	0 0.00 0.00 0.00	4 4.17
Total	94 97.92	2 2.08	96 100.00

TABLE OF SITE BY MDH

SITE	MDH		
Frequency Percent Row Pct Col Pct	4	234	Total
PUNE	18 18.75 94.74 19.15	1 1.04 5.26 50.00	19 19.79
Total	94 97.92	2 2.08	96 100.00

TABLE OF SITE BY MDH

SITE	MDH		
Frequency Percent Row Pct Col Pct	4	234	Total
RIYA	2 2.08 100.00 2.13	0 0.00 0.00 0.00	2 2.08
Total	94 97.92	2 2.08	96 100.00

TABLE OF SITE BY MDH

SITE	MDH		
Frequency Percent Row Pct Col Pct	4	234	Total
SABATH	9 9.38 100.00 9.57	0 0.00 0.00 0.00	9 9.38
Total	94 97.92	2 2.08	96 100.00

TABLE OF SITE BY MDH

SITE MDH

Frequency Percent Row Pct Col Pct	4	234	Total
SHIMLA	11 11.46 100.00 11.70	0 0.00 0.00 0.00	11 11.46
Total	94 97.92	2 2.08	96 100.00

TABLE OF SITE BY MDH

SITE MDH

Frequency Percent Row Pct Col Pct	4	234	Total
SING	2 2.08 100.00 2.13	0 0.00 0.00 0.00	2 2.08
Total	94 97.92	2 2.08	96 100.00

ICIMOD
HEXOKINASE SCORES BY REGION

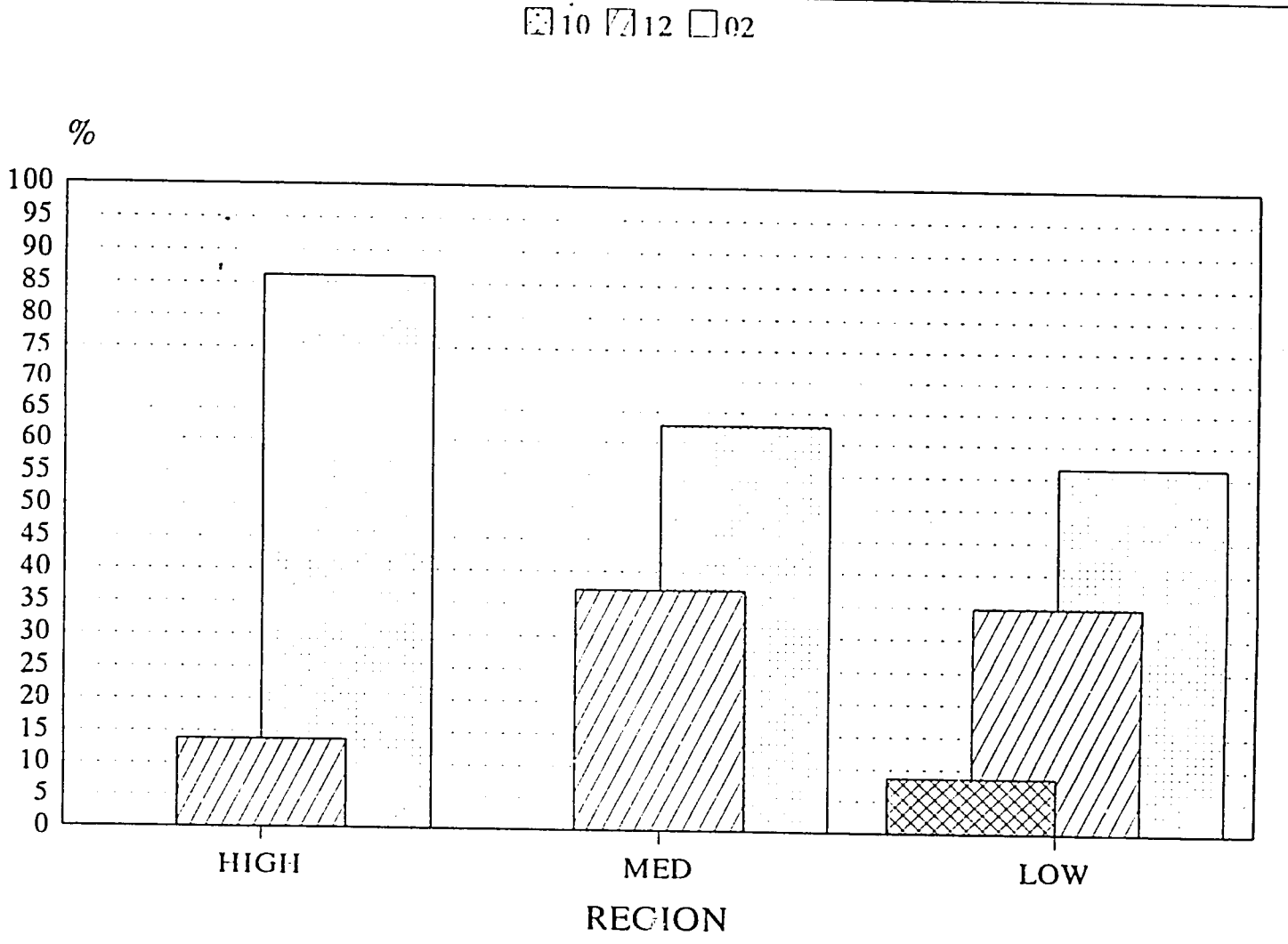

TABLE OF REG BY HEX

REG HEX

Frequency Percent Row Pct Col Pct	2	10	12	Total
H	25 28.74 86.21 41.67	0 0.00 0.00 0.00	4 4.60 13.79 16.00	29 33.33
Total	60 68.97	2 2.30	25 28.74	87 100.00

TABLE OF REG BY HEX

REG HEX

Frequency Percent Row Pct Col Pct	2	10	12	Total
M	22 25.29 62.86 36.67	0 0.00 0.00 0.00	13 14.94 37.14 52.00	35 40.23
Total	60 68.97	2 2.30	25 28.74	87 100.00

TABLE OF REG BY HEX

REG HEX

Frequency Percent Row Pct Col Pct	2	10	12	Total
L	13 14.94 56.52 21.67	2 2.30 8.70 100.00	8 9.20 34.78 32.00	23 26.44
Total	60 68.97	2 2.30	25 28.74	87 100.00

TABLE OF SITE BY HEX

SITE	HEX			
Frequency Percent Row Pct Col Pct	2	10	12	Total
AMBALA 1	1 1.15 33.33 1.67	0 0.00 0.00 0.00	2 2.30 66.67 8.00	3 3.45
Total	60 68.97	2 2.30	25 28.74	87 100.00

TABLE OF SITE BY HEX

SITE	HEX			
Frequency Percent Row Pct Col Pct	2	10	12	Total
BHIUNA 2	4 4.60 100.00 6.67	0 0.00 0.00 0.00	0 0.00 0.00 0.00	4 4.60
Total	60 68.97	2 2.30	25 28.74	87 100.00

TABLE OF SITE BY HEX

SITE	HEX			
Frequency Percent Row Pct Col Pct	2	10	12	Total
BHUGHU 3	0 0.00 . 0.00	0 0.00 . 0.00	0 0.00 . 0.00	0 0.00
Total	60 68.97	2 2.30	25 28.74	87 100.00

TABLE OF SITE BY HEX

SITE HEX

Frequency Percent Row Pct Col Pct	2	10	12	Total
BIJAYA 4	1 1.15 100.00 1.67	0 0.00 0.00 0.00	0 0.00 0.00 0.00	1 1.15
Total	60 68.97	2 2.30	25 28.74	87 100.00

TABLE OF SITE BY HEX

SITE HEX

Frequency Percent Row Pct Col Pct	2	10	12	Total
BUMRAM 5	4 4.60 100.00 6.67	0 0.00 0.00 0.00	0 0.00 0.00 0.00	4 4.60
Total	60 68.97	2 2.30	25 28.74	87 100.00

TABLE OF SITE BY HEX

SITE HEX

Frequency Percent Row Pct Col Pct	2	10	12	Total
DEWALA 6	0 0.00 0.00 0.00	0 0.00 0.00 0.00	1 1.15 100.00 4.00	1 1.15
Total	60 68.97	2 2.30	25 28.74	87 100.00

TABLE OF SITE BY HEX

SITE	HEX			
Frequency Percent Row Pct Col Pct	2	10	12	Total
GHUGHU 7	4 4.60 100.00 6.67	0 0.00 0.00 0.00	0 0.00 0.00 0.00	4 4.60
Total	60 68.97	2 2.30	25 28.74	87 100.00

TABLE OF SITE BY HEX

SITE	HEX			
Frequency Percent Row Pct Col Pct	2	10	12	Total
KANGRA 8	3 3.45 75.00 5.00	0 0.00 0.00 0.00	1 1.15 25.00 4.00	4 4.60
Total	60 68.97	2 2.30	25 28.74	87 100.00

TABLE OF SITE BY HEX

SITE	HEX			
Frequency Percent Row Pct Col Pct	2	10	12	Total
KATHMA 9	7 8.05 41.18 11.67	0 0.00 0.00 0.00	10 11.49 58.82 40.00	17 19.54
Total	60 68.97	2 2.30	25 28.74	87 100.00

TABLE OF SITE BY HEX

SITE	HEX			
Frequency Percent Row Pct Col Pct	2	10	12	Total
KUNIHA 10	3 3.45 60.00 5.00	0 0.00 0.00 0.00	2 2.30 40.00 8.00	5 5.75
Total	60 68.97	2 2.30	25 28.74	87 100.00

TABLE OF SITE BY HEX

SITE	HEX			
Frequency Percent Row Pct Col Pct	2	10	12	Total
NURPUR 11	3 3.45 60.00 5.00	0 0.00 0.00 0.00	2 2.30 40.00 8.00	5 5.75
Total	60 68.97	2 2.30	25 28.74	87 100.00

TABLE OF SITE BY HEX

SITE	HEX			
Frequency Percent Row Pct Col Pct	2	10	12	Total
PATANK 12	2 2.30 100.00 3.33	0 0.00 0.00 0.00	0 0.00 0.00 0.00	2 2.30
Total	60 68.97	2 2.30	25 28.74	87 100.00

TABLE OF SITE BY HEX

SITE	HEX			
Frequency Percent Row Pct Col Pct	2	10	12	Total
PUNE 13	7 8.05 53.85 11.67	2 2.30 15.38 100.00	4 4.60 30.77 16.00	13 14.94
Total	60 68.97	2 2.30	25 28.74	87 100.00

TABLE OF SITE BY HEX

SITE	HEX			
Frequency Percent Row Pct Col Pct	2	10	12	Total
RIYA 14	1 1.15 50.00 1.67	0 0.00 0.00 0.00	1 1.15 50.00 4.00	2 2.30
Total	60 68.97	2 2.30	25 28.74	87 100.00

TABLE OF SITE BY HEX

SITE	HEX			
Frequency Percent Row Pct Col Pct	2	10	12	Total
SABATH 15	9 10.34 100.00 15.00	0 0.00 0.00 0.00	0 0.00 0.00 0.00	9 10.34
Total	60 68.97	2 2.30	25 28.74	87 100.00

TABLE OF SITE BY HEX

SITE HEX

Frequency Percent Row Pct Col Pct	2	10	12	Total
SHIMLA 16	9 10.34 81.82 15.00	0 0.00 0.00 0.00	2 2.30 18.18 8.00	11 12.64
Total	60 68.97	2 2.30	25 28.74	87 100.00

TABLE OF SITE BY HEX

SITE HEX

Frequency Percent Row Pct Col Pct	2	10	12	Total
SING 17	2 2.30 100.00 3.33	0 0.00 0.00 0.00	0 0.00 0.00 0.00	2 2.30
Total	60 68.97	2 2.30	25 28.74	87 100.00

Frequency Missing = 9

ICIMOD
PHOSPHOGUTOMUTASE SCORES BY REGION

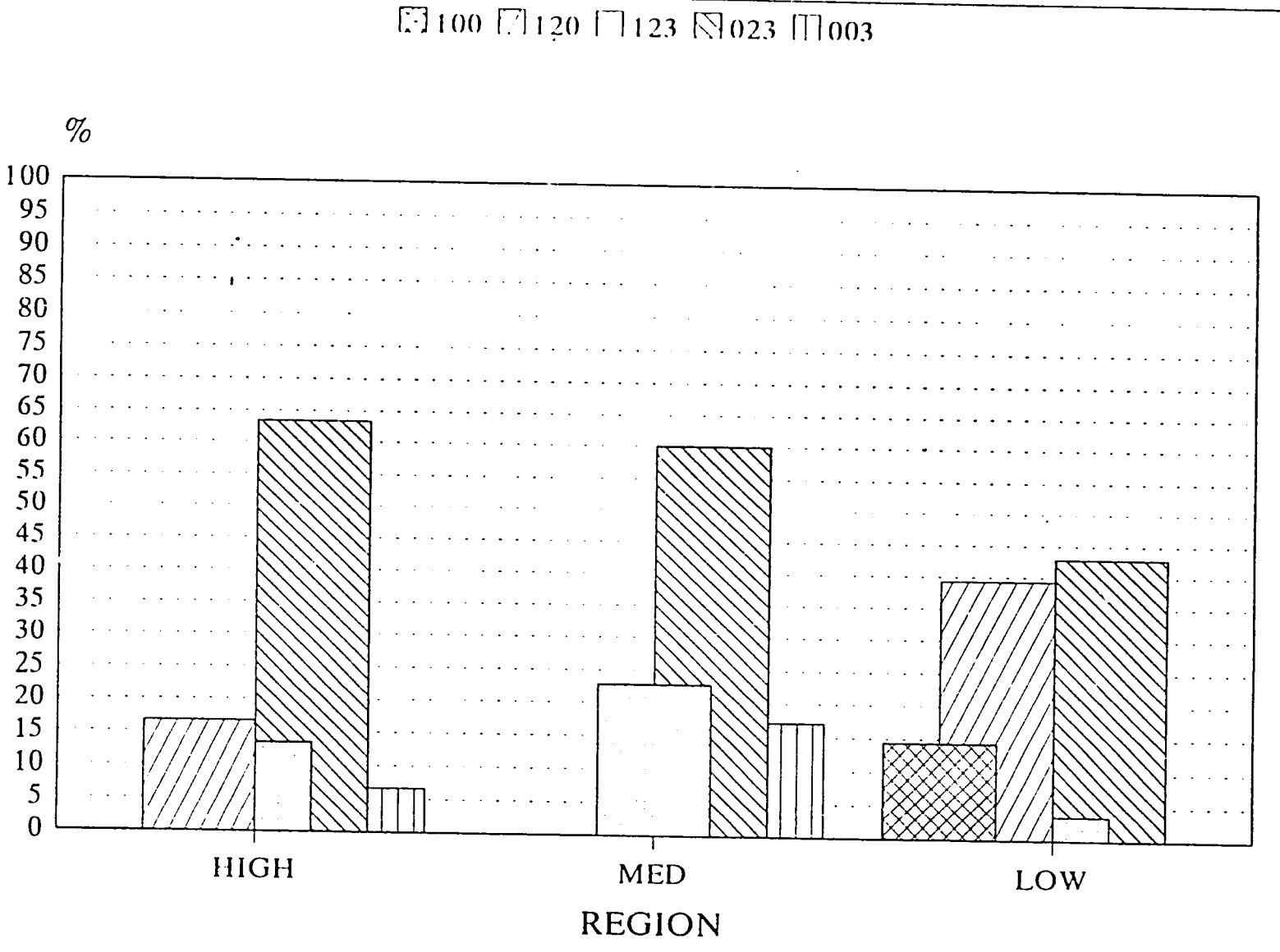

TABLE OF REG BY PGM

REG PGM

Frequency Percent Row Pct Col Pct	20	23	100	120	123	Total
H	2 2.15 6.67 25.00	19 20.43 63.33 36.54	0 0.00 0.00 0.00	5 5.38 16.67 31.25	4 4.30 13.33 30.77	30 32.26
Total	8 8.60	52 55.91	4 4.30	16 17.20	13 13.98	93 100.00

TABLE OF REG BY PGM

REG PGM

Frequency Percent Row Pct Col Pct	20	23	100	120	123	Total
M	6 6.45 17.14 75.00	21 22.58 60.00 40.38	.00 0.00 0.00	0 0.00 0.00 0.00	8 8.60 22.86 61.54	35 37.63
Total	8 8.60	52 55.91	4 4.30	16 17.20	13 13.98	93 100.00

TABLE OF REG BY PGM

REG PGM

Frequency Percent Row Pct Col Pct	20	23	100	120	123	Total
L	0 0.00 0.00 0.00	12 12.90 42.86 23.08	4 4.30 14.29 100.00	11 11.83 39.29 68.75	1 1.08 3.57 7.69	28 30.11
Total	8 8.60	52 55.91	4 4.30	16 17.20	13 13.98	93 100.00

TABLE OF SITE BY PGM

SITE PGM

Frequency Percent Row Pct Col Pct	20	23	100	120	123	Total
AMBALA	0 0.00 0.00 0.00	1 1.08 33.33 1.92	0 0.00 0.00 0.00	1 1.08 33.33 6.25	1 1.08 33.33 7.69	3 3.23
Total	8 8.60	52 55.91	4 4.30	16 17.20	13 13.98	93 100.00

TABLE OF SITE BY PGM

SITE PGM

Frequency Percent Row Pct Col Pct	20	23	100	120	123	Total
BHIUNA	0 0.00 0.00 0.00	2 2.15 50.00 3.85	0 0.00 0.00 0.00	1 1.08 25.00 6.25	1 1.08 25.00 7.69	4 4.30
Total	8 8.60	52 55.91	4 4.30	16 17.20	13 13.98	93 100.00

TABLE OF SITE BY PGM

SITE PGM

Frequency Percent Row Pct Col Pct	20	23	100	120	123	Total
BHUGHU	0 0.00 0.00 0.00	1 1.08 100.00 1.92	0 0.00 0.00 0.00	0 0.00 0.00 0.00	0 0.00 0.00 0.00	1 1.08
Total	8 8.60	52 55.91	4 4.30	16 17.20	13 13.98	93 100.00

TABLE OF SITE BY PGM

SITE PGM

Frequency Percent Row Pct Col Pct	20	23	100	120	123	Total
BIJAYA	0 0.00 0.00 0.00	0 0.00 0.00 0.00	0 0.00 0.00 0.00	0 0.00 0.00 0.00	1 1.08 100.00 7.69	1 1.08
Total	8 8.60	52 55.91	4 4.30	16 17.20	13 13.98	93 100.00

TABLE OF SITE BY PGM

SITE PGM

Frequency Percent Row Pct Col Pct	20	23	100	120	123	Total
BUMRAM	0 0.00 0.00 0.00	3 3.23 75.00 5.77	0 0.00 0.00 0.00	1 1.08 25.00 6.25	0 0.00 0.00 0.00	4 4.30
Total	8 8.60	52 55.91	4 4.30	16 17.20	13 13.98	93 100.00

TABLE OF SITE BY PGM

SITE PGM

Frequency Percent Row Pct Col Pct	20	23	100	120	123	Total
DEWALA	1 1.08 100.00 12.50	0 0.00 0.00 0.00	0 0.00 0.00 0.00	0 0.00 0.00 0.00	0 0.00 0.00 0.00	1 1.08
Total	8 8.60	52 55.91	4 4.30	16 17.20	13 13.98	93 100.00

TABLE OF SITE BY PGM

SITE	PGM					
Frequency Percent Row Pct Col Pct	20	23	100	120	123	Total
GHUGHU	0 0.00 0.00 0.00	3 3.23 75.00 5.77	0 0.00 0.00 0.00	1 1.08 25.00 6.25	0 0.00 0.00 0.00	4 4.30
Total	8 8.60	52 55.91	4 4.30	16 17.20	13 13.98	93 100.00

TABLE OF SITE BY PGM

SITE	PGM					
Frequency Percent Row Pct Col Pct	20	23	100	120	123	Total
KANGRA	1 1.08 25.00 12.50	3 3.23 75.00 5.77	0 0.00 0.00 0.00	0 0.00 0.00 0.00	0 0.00 0.00 0.00	4 4.30
Total	8 8.60	52 55.91	4 4.30	16 17.20	13 13.98	93 100.00

TABLE OF SITE BY PGM

SITE	PGM					
Frequency Percent Row Pct Col Pct	20	23	100	120	123	Total
KATHMA	4 4.30 23.53 50.00	8 8.60 47.06 15.38	0 0.00 0.00 0.00	0 0.00 0.00 0.00	5 5.38 29.41 38.46	17 18.28
Total	8 8.60	52 55.91	4 4.30	16 17.20	13 13.98	93 100.00

TABLE OF SITE BY PGM

SITE PGM

Frequency Percent Row Pct Col Pct	20	23	100	120	123	Total
KUNIHA	1 1.08 20.00 12.50	3 3.23 60.00 5.77	0 0.00 0.00 0.00	0 0.00 0.00 0.00	1 1.08 20.00 7.69	5 5.38
Total	8 8.60	52 55.91	4 4.30	16 17.20	13 13.98	93 100.00

TABLE OF SITE BY PGM

SITE PGM

Frequency Percent Row Pct Col Pct	20	23	100	120	123	Total
NURPUR	0 0.00 0.00 0.00	5 5.38 100.00 9.62	0 0.00 0.00 0.00	0 0.00 0.00 0.00	0 0.00 0.00 0.00	5 5.38
Total	8 8.60	52 55.91	4 4.30	16 17.20	13 13.98	93 100.00

TABLE OF SITE BY PGM

SITE PGM

Frequency Percent Row Pct Col Pct	20	23	100	120	123	Total
PATANK	0 0.00 0.00 0.00	3 3.23 100.00 5.77	0 0.00 0.00 0.00	0 0.00 0.00 0.00	0 0.00 0.00 0.00	3 3.23
Total	8 8.60	52 55.91	4 4.30	16 17.20	13 13.98	93 100.00

TABLE OF SITE BY PGM

SITE PGM

Frequency Percent Row Pct Col Pct	20	23	100	120	123	Total
PUNE	0 0.00 0.00 0.00	3 3.23 17.65 5.77	4 4.30 23.53 100.00	10 10.75 58.82 62.50	0 0.00 0.00 0.00	17 18.28
Total	8 8.60	52 55.91	4 4.30	16 17.20	13 13.98	93 100.00

TABLE OF SITE BY PGM

SITE PGM

Frequency Percent Row Pct Col Pct	20	23	100	120	123	Total
RIYA	0 0.00 0.00 0.00	2 2.15 100.00 3.85	0 0.00 0.00 0.00	0 0.00 0.00 0.00	0 0.00 0.00 0.00	2 2.15
Total	8 8.60	52 55.91	4 4.30	16 17.20	13 13.98	93 100.00

TABLE OF SITE BY PGM

SITE PGM

Frequency Percent Row Pct Col Pct	20	23	100	120	123	Total
SABATH	0 0.00 0.00 0.00	7 7.53 77.78 13.46	0 0.00 0.00 0.00	0 0.00 0.00 0.00	2 2.15 22.22 15.38	9 9.68
Total	8 8.60	52 55.91	4 4.30	16 17.20	13 13.98	93 100.00

TABLE OF SITE BY PGM

SITE PGM

Frequency Percent Row Pct Col Pct	20	23	100	120	123	Total
SHIMLA	1 1.08 9.09 12.50	6 6.45 54.55 11.54	0 0.00 0.00 0.00	2 2.15 18.18 12.50	2 2.15 18.18 15.38	11 11.83
Total	8 8.60	52 55.91	4 4.30	16 17.20	13 13.98	93 100.00

TABLE OF SITE BY PGM

SITE PGM

Frequency Percent Row Pct Col Pct	20	23	100	120	123	Total
SING	0 0.00 0.00 0.00	2 2.15 100.00 3.85	0 0.00 0.00 0.00	0 0.00 0.00 0.00	0 0.00 0.00 0.00	2 2.15
Total	8 8.60	52 55.91	4 4.30	16 17.20	13 13.98	93 100.00

Frequency Missing = 3

5d. Bee Pollination Research

Many vegetable crops are completely or partially self-incompatible and incapable of pollinating themselves, so the cross-pollination of their flowers by insects, especially honeybees, is very essential (Verma, 1990). Cauliflowers, cabbages, radishes and lettuces are some of the important vegetable crops grown in the Kathmandu valley of Nepal. We carried out detailed investigations on the utilization of the native Asian hive bee, *Apis cerana*, to enhance the yield and quality of seed production in these crops through bee pollination.

Materials and Methods

Plants of these vegetable crops, i.e. cauliflowers (*Brassica oleracea* var. *botrytis* sub-var Kathmandu Local): cabbages (*Brassica oleracea* var. *capitata* sub-var Pride of India); radishes (*Raphanus sativus* var. Mino Early), and lettuces (*Lactuca sativa*) were raised on the experimental plots of the HMG FAO Vegetable Seed Production Farm, Khumaltar, Kathmandu, Nepal, during different times of the year. Three treatments were imposed on each crop when it started blooming, namely (1) Control (no insect pollinators), (2) Open-Pollinated (only natural insect pollinators), and (3) Bee-pollinated.

For control, ten branches (one each from ten plants with an almost equal number of flowers/buds of almost the same age) were covered with muslin bags so that no insect pollinator could enter to pollinate the flowers; for honeybee-pollination, about 100 plants were covered with a pollination cage and a colony of *Apis cerana*, with 7 frames covered with bees, was placed in the cage when about 5-10 per cent of the crop was in bloom. Observations on the foraging behaviour were recorded at 0900, 1200 and 1500 h each day. To differentiate between pollen and nectar collectors, the method of Erickson et al., (1973) was followed; the weight of pollen loads were determined by anaesthetizing the bees returning with pollen loads with carbon dioxide (Frisch, 1967) and then removing their pollen loads and weighing them. Changes in the quality and quantity of the seeds as a result of bee-pollination were assessed in terms of increase in fruit set, number of seeds per fruit, and increase in seed weight.

Results

Cauliflower

Apis cerana started foraging at 0700 h and ceased activities at 1805 h. The total duration of foraging activity was 11.03 h and peak foraging activity occurred between 1000-1300 h. The duration of each foraging trip was 26.8 minutes. Each worker bee spent an average of 5.6 seconds on the flower, visited 6-8 flowers per trip, and the number of bees per plant varied from 4-9. At 0900 h, pollen collectors (P) outnumbered nectar collectors (N); this ratio was equal at 1200 h but at 1500 h nectar collectors outnumbered pollen collectors. *Apis cerana* collected either pollen or nectar but not both during the same foraging trip (Table 1). Bee pollination significantly increased fruit set by 57 and 20 per cent compared to control and open-pollinated plants. Similarly, the number of seeds per siliqua increased by 85 and 25 per cent compared to control and open-pollinated plants respectively. *Apis cerana* pollination also resulted in an increase in the seed weight (by 38.6 and 27.2 per cent) and enhanced seed germination (by 16 and 12 per cent compared to control and open pollinated plants respectively; Table2).

Cabbage

Worker bees of *Apis cerana* began foraging at 0630 h and ceased their activities at 1835 h; thus, the total duration of foraging activity was 12.05 hours. Peak foraging activity was observed between 1000-1300 h and duration of each foraging trip was 23.8 min. Each bee made an average of 10 foraging trips per day. *Apis cerana* workers collected either pollen or nectar but never both during the same foraging trip. During morning hours pollen collectors outnumbered nectar collectors (P:N=6:4). This ratio was equal at 1200 h (P:N=5:5)and at 1500 h nectar collectors outnumbered pollen collectors (P:N=4:6). Each worker bee spent 4-7 seconds on the flower and collected 8-10 mg of pollen (Table 1). Bee pollination resulted in an increase in fruit and seed set by 27 and 32 per cent respectively compared to open pollinated plants. Control plants did not set any fruit,

indicating that the crop was self-incompatible. Bee-pollination significantly increased the weight of the seeds by 33.8 per cent and germination by 28 per cent compared to open-pollinated plants (Table 2).

Radish

Apis cerana worker bees started foraging 0840 h and ceased activity at 1830 h; thus the total duration of foraging activity was 9.5 hours per day. Peak foraging activity was observed between 1100-1300 h. Each bee made an average of nine trips in a day and the duration of each foraging trip was 22.1 minutes. A bee spent 4-12 seconds on a flower and carried 7-11 mg of pollen load. Pollen collectors outnumbered nectar collectors at 0900 h (P:N=6:4) the ratio was equal (P:N=5:5) at noon and in the afternoon, at 1500 h nectar collectors outnumbered pollen collectors (P:N=3:7). Most of the bees collected either pollen or nectar, but a few bees (4% during the morning and 7% at noon) collected both pollen as well as nectar during the same foraging trip (Table 1). Bee pollination significantly enhanced fruit set by 23 per cent compared to open-pollinated plants. Bee-pollination also significantly increased the number of seeds per siliqua (by 28.6 per cent) and seed weight (by 30.8 per cent) compared to open-pollinated plants. Control branches did not set any fruit, indicating that the crop was self-incompatible. Bee-pollination enhanced seed germination by 32 per cent (Table 3).

Lettuce

The bees started foraging on lettuce soon after flowering head was open, i.e. at 0830 h and ceased their activities only when the flowering heads were closed, i.e. at 1130 h. Peak foraging activity was observed between 0900-1100 h and the average duration of each foraging trip was 15.6 minutes. Each bee spent an average of 3.84 sec on a flower, collected 8 mg of pollen load and visited 13 flowers per minute. The number of bees per plant was 4. The bees collected only pollen because the plant did not secrete nectar (Table 1).

Bee pollination significantly increased the number of seeds per capitulum (flowering head) by 31.8 and 21.05 per cent compared to control and open-pollinated plants respectively. Seed weight increased by 16.0 per cent due to bee-pollination, compared to control, and by 9.2 per cent compared to open-pollinated plants. Seed length increased by 23.8 and 11.2 per cent and breadth by 13.2 and 3.2 per cent respectively over that of control and open-pollinated plants. Germination of seeds was also enhanced by 20 and 12.8 per cent in bee pollinated plants compared to control and open-pollinated plants respectively. Seeds from bee-pollinated plants also showed resistance to fungal attack (Table 4).

Comparative Foraging Behaviour of *Apis cerana* and *Apis mellifera* on Indian Mustard (*Brassica juncea*, var Khumal Broad Leaf).

The investigations carried out by our research group at ICIMOD on the comparative Foraging Behavior of *Apis cerana* and *Apis mellifera* on Indian Mustard (*Brassica juncea*, var Khumal Broad Leaf) is presented in Table 5. *Apis cerana* began foraging earlier in the morning (mean time 0626 h) than *Apis mellifera* (mean time 0649 h). In the evening *Apis mellifera* stopped earlier (mean time 1811 h) than *Apis cerana* (mean time 1821 h). The average duration of foraging activity was 11.55 h for *Apis cerana* and 11.22 hours for *Apis mellifera*. Differences in all three parameters were significant at $P<0.01$.

The duration of an individual foraging trip by *Apis cerana* was 23.24 ± 0.22 min., significantly shorter ($P<0.01$) than the time of 25.29 ± 0.57 min. for *Apis mellifera*
(Table 5).

Both species of honeybee did not differ significantly in behavioral characteristics such as time spent while foraging on each flower and time taken to shift from one flower to another, number of flowers visited on each plant at a time (Table 5).

Nectar collectors outnumbered pollen collectors ($P < 0.01$) for both species throughout the day, except at 1200 h in *Apis mellifera* when pollen collectors were significantly more than nectar collectors. The ratio of nectar collectors to pollen collectors varied considerably with the time of day and between species at different times of the day (Table 6). For *Apis cerana*, more bees were collecting nectar than pollen at 1500 and 1200 h; whereas, for *Apis mellifera*, nectar collectors were more numerous at 0900 and 1500 h, pollen foragers of *Apis mellifera* outnumbered those of *Apis cerana* at 0900, 1200, and 1500 h.

The peak of activity for *Apis cerana* (mean number of incoming bees/ three minutes) occurred between 1200 - 1300 hours when the temperature was 25.8 to 27.4°C; relative humidity range 52.2 to 58.4, and, for *Apis mellifera*, it occurred between 1300 to 1400 hours when the mean outside temperature was 25.6 to 27.4°C and the relative humidity ranged from 52.2 to 56.6 per cent (Table 5).

Note: i) *The results of pollination research are being published in a series of research papers and for details please refer to MS # 9-20 included in the compendium of this annual report.*

ii) *Based on pollination research data generated through this project, a manual entitled "The Asian Hive Bee Apis cerana as a Pollinator in Vegetable Seed Production: An awareness hand book" has been published by ICIMOD and is attached with this report.*

Table 1. Comparative Foraging Behaviour of *Apis cerana* on Cauliflower, Cabbage, Radish and Lettuce Plants in Kathmandu Valley, Nepal. Values are mean ± S.E.

Parameter	Cauliflower	Cabbage	Radish	Lettuce*
Initiation of foraging (time of day)	0702±0.02	0630±0.02	0640±0.02	0830±0.05
Cessation of foraging (time of day)	1805±0.02	1835±0.03	1830±0.02	1130±0.05
Duration of foraging activity (h)	11.03±0.03	12.05±0.05	11.50±0.04	3.00 Ý 0.05
Peak foraging hours (time of day)	1100-1300	1100-1300	1100-1300	0900 - 1100
Duration of foraging trip (min)	26.87±0.81	23.87±0.42	22.13±0.03	5.66±0.04
Time on flower (sec)				
at 0900 h	5.83±0.3	4.33±0.21	4.34±0.06	3.84±0.02
1200 h	6.69±0.5	4.63±0.32	5.31±0.03	
1500 h	5.14±0.2	6.90±0.24	12.79±0.03	
No. of flowers visited per min				
at 0900 h	7.0±0.5	7.00±0.40	8.00±0.50	13.00±1.00
1200 h	6.0±1.0	7.00±0.50	9.00±0.40	
1500 h	8.0±0.5	5.00±0.50	5.00±0.50	
Pollen load (mg)				
at 0900 h	7.0±0.5	8.00±0.03	11.00±0.20	8.00±0.10
1200 h	9.0±0.3	10.00±0.01	10.00±0.50	
1500 h	5.0±0.5	8.00±0.49	7.00±0.50	
Ratio between pollen collectors and nectar collectors (P:N)				
at 0900 h	7:3	6:4	6:4	-
1200 h	5:5	5:5	5:5	
1500 h	3:7	4:6	3:7	
No. of bees per plant				
at 0900 h	9	3	5	4
1200 h	8	4	9	
1500 h	4	3	4	
Pollen+Nectar collectors (P+N)				
at 0900 h	nil	nil	4%	nil
1200 h	nil	nil	7%	
1500 h	nil	nil	nil	

* In lettuce, flowers open in the morning for three to four hours only.

Table 2: Qualitative and Quantitative effects of *Apis cerana* Pollination on Cauliflower and Cabbage. Values are Mean ±S.E.

Parameters	Control	Open Pollinated	Bee Pollinated	% Increase[1]	% Increase[2]
Cauliflower					
Percent Fruit Set	22.7±1.2	57.0±5.1	80.7±7.5	58.0	23.7
No. of Seeds/Siliqua	3.3±1.4	14.8±0.6	19.8±0.5	500	33.8
100 Seed Wt.(mg)	264.0±7.0	313.0±8.0	430.0±12.0	62.9	37.4
Percent Germination	79.6±1.2	83.8±2.0	95.6±1.1	16.0	11.8
Cabbage					
Percent Fruit Set	No fruit set	52.1±3.5	79.8±3.3	-	27.7
No. of Seeds/Siliqua	-	18.0±0.1	28.3±0.7	-	52.9
100 Seed Wt.(mg)	-	278.0±4.0	420.0±3.0	-	51.1
Percent Germination	-	56.4±1.3	84.0±1.1	-	27.6

[1] Increase compared to control
[2] Increase compared to open pollinated

For both cauliflower and cabbage differences in fruit set, number of seeds per fruit, 100 seed weight and percent germination between control, open pollinated and bee pollinated are significant ($P<0.01$).

83

Table 3: Quantitative and Qualitative Effects of *Apis cerana* Pollination on Radish Seeds Values are Mean ±S.E.

Parameter	Control	Open-Pollinated	Bee Pollinated	Percentage Increase
% Pod Set	No Pod Set	51.2±4.9	74.2±4.4	23.0
No. of Seeds per Pod	-	5.2 ±0.4	7.4 ±0.3	42.3
100 seed Wt. (mg)	-	1276 ±4	1844 ±7	44.5
Per cent Germination of Seeds	-	44.0±3.4	76.0±3.6	32.0

Differences in pod set, number of seed per pod, 100 seed weight and germina[illegible] [illegible]etwee[illegible] pollinated and bee pollinated are significant ($P<0.01$).

Table 4: Qualitative and Quantitative Effects of *Apis cerana* Pollination [illegible] Lettuce Values are mean ± S.E.

Parameter	Control	Open Pollinated	Bee Pollinated	% Increase[1]	% Incre[illegible]
No. of Seeds per Fruit	15.70±0.63	17.10±0.30	20.70±0.75	31.80**	21.05*
100 Seed Weight (mg)	109.57±0.46	110.41±0.39	127.14±0.85	16.03**	15.1**
Length of seed (mm)	3.35±0.10	3.73±0.09	4.15±0.10	23.88**	11.26*
Percent Germination	76.66	83.83	96.66	20.00	12.83
Resistance to Fungal Attack	Susceptible (6 out of 25 seeds were attacked by fungus)	Less resistant (2 out of 25 seeds were attacked by fungus)	More Resistant (no seed was attacked by fungus)		

* = Significant ($P = 0.05$)
** = Significant ($P = 0.01$)
1 = Increase compared to control
2 = Increase compared to open-pollinated

Table 5: **Comparative Foraging Behavior of *Apis cerana* and *Apis mellifera* on Indian Mustard flowers during February/March in the Kathmandu Valley, Nepal. The data are based on ten observations.**

Parameter	*Apis cerana*	*Apis mellifera*
Initiation of foraging (time of day)	0626 ±0.65	0649 ±0.65**
Cessation of foraging (time of day)	1821 ±0.36	1811 ±0.35**
Duration of foraging activity (h)	11.55 ±0.92	11.22 ±0.57**
Peak foraging hours (time of day)	1200 - 1300	1300 - 1400**
Duration of foraging trip (min)	23.24 ±0.22	25.29 ±0.57**
Time spent on flower (sec)		
0900 h	3.23 ±0.15	3.22 ±0.22
1200 h	2.75 ±0.16	3.06 ±0.16
1500 h	2.75 ±0.15	2.74 ±0.16
Time taken to shift from flower to flower (sec)		
0900 h	1.96 ±0.17	1.81 ±0.17
1200 h	1.75 ±0.13	1.61 ±0.13
1500 h	1.64 ±0.13	1.61 ±0.11
Number of flowers visited per min.		
0900 h	11.65 ±0.29	12.20±0.37
1200 h	11.68 ±0.57	13.43±0.52
1500 h	13.75 ±0.52	14.23±0.39
Pollen loads (mg)		
0900 h	13.05 ±0.48	21.14±1.00**
1200 h	12.05 ±0.62	23.58±0.62**
1500 h	13.57 ±0.46	25.74±0.70**
Number of bees per plant.		
0900 h	2	2
1200 h	3	4
1500 h	3	3

** For times of initiation: cessation and duration of foraging activity, duration of foraging trip; and weights of pollen loads, differences between species are significant ($P < 0.01$).

Table 6: **Percentage of *Apis cerana* and *Apis mellifera* Honeybees Collecting Pollen, Nectar and Both from Indian Mustard Flowers during Different Hours of the Day in March in the Kathmandu Valley, Nepal. The data are based on ten observations.**

	0900 h		1200 h		1500 h	
Forager	*cerana*	*mellifera*	*cerana*	*mellifera*	*cerana*	*mellifera*
P	17	39	29	60	11	38
N	38	61	71	40	89	62
PN	0	0	0	0	0	0
P:N	1.0:4.9	1.0:1.6	1.0:2.4	1.5:1.0	1.0:8.1	1.0:1.6

$P<N$ at 0900 h, 1200 h, and 1500 h for *Apis cerana* and at 0900 h and 1500 h for *Apis mellifera* (at $P<0.01$)

$P<N$ at 1200 h for *Apis mellifera* (at $P<0.01$)

P = Pollen collectors

N = Nectar collectors

PN = Pollen plus nectar collectors

P:N = Ratio between pollen and nectar collectors

5e. Behaviour and Apiary Management Research

Information about seasonal pattern of foraging behaviour, colony growth and development of *Apis cerana* under local agro-ecological conditions is important for developing appropriate apiary management practices in order to make *Apis cerana* a commercially viable species. It is with this objective that following research on foraging activity and impact of food resource availability on growth and development of *Apis cerana* colonies in Kathmandu valley of Nepal was investigated.

Materials and Methods

This study was conducted from September, 1991 to August, 1992 at ICIMOD apiary located in Kathmandu valley of Nepal (lat. 27.70', long. 85.33', alt. 1336 m above sea level).

Foraging activity pattern and its relationship to brood production, prolificness and reproductive swarming were examined by estimating the following activities during different months.

- Initiation, cessation and peak hours of foraging
- Percentage of pollen collecting bees during different hours of the day
- Number and duration of foraging trip/day
- Weight of pollen load collected during different hours of the day
- Ratio of pollen and nectar collectors during different hours
- Drone rearing and queen cell construction
- Percent comb area under brood honey and pollen
- Prolificness

The above foraging behaviour parameters were studied according to the methods of Frisch (1967), Erickson et.al. (1973) and Al-Tikrity et. al (1971).

Forage availability was estimated by conducting monthly vegetational surveys of the number of blooming trees, shrubs and weeds. Such survey for trees and shrubs was conducted in 3 plots of 1000 m^2 square area around three apiaries located 5 km apart. Each month total number of blooming trees and shrubs was recorded around each apiary site. The utilization of a species by honeybees was determined through direct observations or through published reports of plants visited by *Apis cerana* (Kafle, 1984; Maskey, 1992).

Vegetational surveys for weeds/annuals were conducted by establishing 30 transacts 25 m long; 10 transacts around each apiary. After every three weeks, the total number of blooming weeds were counted throughout the year. Each species of blooming plant was assigned a "bloom value" according to the method of McNally and Schneider (1992).

Food resource availability pattern in the present investigation was further supplemented with colony performance index (CPI) based on number of foragers returning with pollen loads was calculated using the method of Punchihewa et al. (1990).

$$CPI = \frac{(F_p)^2}{T_{obs} \times F_t} \times 100$$

F_p = Total number of foragers returning with pollen loads

F_t = Total number of returning foragers

T_{obs} = Observational period in seconds

To determine seasonal/annual cycle of colony growth and development observations recorded on total comb area (in cm^2) and the proportion of comb area devoted to brood rearing and food (honey and pollen) after every three weeks. In order to know whether a colony exhibited characteristics of reproductive swarming, colonies were examined every week and number of queen cells constructed by the colony were counted and area (cm^2) under drone brood was recorded. We also compared to absconding and non-absconding colonies with respect to (i) proportion of comb area devoted to brood and food and (ii) CPI values.

Results

Seasonal Pattern of Foraging Activity

Figure 1 shows that May, June and July were the most active foraging months for *Apis cerana* because this bees species started foraging early in the morning during these months (range 0523 to 0536 h) and ceased late in the evening (range 1847 to 1902 h). Thus daily total foraging hours during these months varied from 13.36 to 13.56. On the contrary, November, December and January were the slack months for bees activities because this species started foraging late in the morning (range 0647-0702 h) and ceased early in the evening (range 1727 to 1747 h) and daily foraging hours varied from 10.35 to 10.45 h.

Peak hours of foraging activities as judged by number of incoming bees per minute during different hours of the day varied in different months. For example, during May-June, peak foraging hours were observed at 0900 h but in December, same were at 1300 h. Maximum total brood area (2505 to 2895 sq cm) and egg laying rate (range 477-551 eggs per day) were observed during May-June or September-October and minimum during December and January (total brood area range 341-698 sq cm daily prolificness range 65-133. Fig. 2).

Maximum comb area covered under pollen was observed during October-November and February-March (583-753 sq cm) and minimum in December and January (122-162 sq cm). Maximum area under honey and total food (honey+pollenstores) was in May and October to December (1624-2529 sq cm) and minimum in January. Throughout the year, more area was under brood than under pollen but total food area (honey+pollen)was more than total brood area throughout the year (Fig. 2).

Data on colony performance index (CPI) calculated on the basis of number of incoming foragers revealed that May and July to September showed CPI values greater than 12 and these values were minimum during December to February (0.7 to 4.2, Fig. 3).

On an average, *Apis cerana* carried heaviest pollen loads at noon hours than in the morning or evening hours. Also heavier pollen loads were collected from May to September (range 8.7 to 11.2 mg) and minimum values for pollen loads collection were recorded during December to February (5.2 to 6.4 mg).

Number of foraging trips per day varied from 6 to 12 with maximum in April-May and August to November (10-12) and minimum during December to February (6-8). The duration of each foraging trip differed from 20 to 28.2 minutes during different month of the year.

At 0900 h, pollen collectors outnumbered nectar collectors except in December, January and Feb; at 1200 h either this rate was equal in March to May and July or pollen collectors outnumbered nectar collectors (July, August, October and November) except in December, January and September when nectar collectors exceeded the rate of pollen collectors. At 1500 hrs nectar collectors outnumbered pollen collectors from March to August and September, ratio was equal in November and in October pollen collectors exceeded the rate of nectar collectors.

Impact of Food Resource on Colony Growth and Development

Table 1. lists important pollen and nectar plants blooming during different months of the year. Table shows that the bee forage is available during all the months of the year however relative abundance of flowering plants varies. Mean bloom values for trees, shrubs and weeds are plotted in Fig 4. This figure shows that relatively more forge was available during March to October. It is during these months most of the colonies (10% - 50%) showed the characteristics of swarming (Fig. 5). Some colonies (10%) showed the characteristics of swarming even in February. During the months of November to January, comparatively less forage was available and the colonies did not show any characteristics of swarming.

During the months from March to November, colonies stored more food (pollen and nectar) and reared more brood. During these months 30% - 50% of the total comb area was devoted to food (pollen and honey) storage and 40% - 60% of the total comb area was devoted to brood rearing (Fig. 6). During the months of December to February only 6-35 percent of comb area was devoted to brood rearing

and 20-35 percent of the comb area was devoted to food storage. Colony performance index (CPI) also showed higher values during these months i.e. March to November. As mentioned earlier, CPI of a colony depends upon the number of foragers bringing pollen and this ultimately related to the forage availability to bees and amount of brood. During these months CPI values ranged between 8 to 18 with maximum in September. During other months of the year (December-February) CPI values were below 5 with minimum value 0.5 in January (Fig. 3).

Apiary Management Research

Apiary management research concentrated mainly on Sac brood virus disease in *Apis cerana* colonies. This disease is at present one of the serious constraints in beekeeping with *Apis cerana*. The identification of causal organism of the disease has been reconfirmed in collaboration with Bee Pathology Laboratory, Rothamsted Experimental Station, U.K. Different control measures such as administration of antibiotic, anti-viral chemotherapy as developed by Chinese Institute of Apicultural Science, provision of brood frames to the diseased colonies, introduction of new queens, mechanical removal of affected brood, strengthening of affected colonies by uniting them etc. were tried and main conclusions drawn from these experiments are follows:

i This disease start appearing in the colonies in the spring season when honey flow season begins.

ii Usually the weak colonies with less than five frames covered with brood and adult bees are more susceptible than stronger colonies.

iii About two to three generations of the brood in the affected colonies suffer the worst attack of this disease and after this all affected colonies start recovering by the end of spring season or beginning of summer season.

iv The best way to check this disease is to keep colonies strong by uniting the adult bees of week ones and discarding the affected brood.

v In severely affected colonies, sterilization of hive and combs with formaline also reduces the incidence of the disease.

Note: *Two important research papers on the results of behaviour research are included in the compendium of this final report as MS # 21 and 22.*

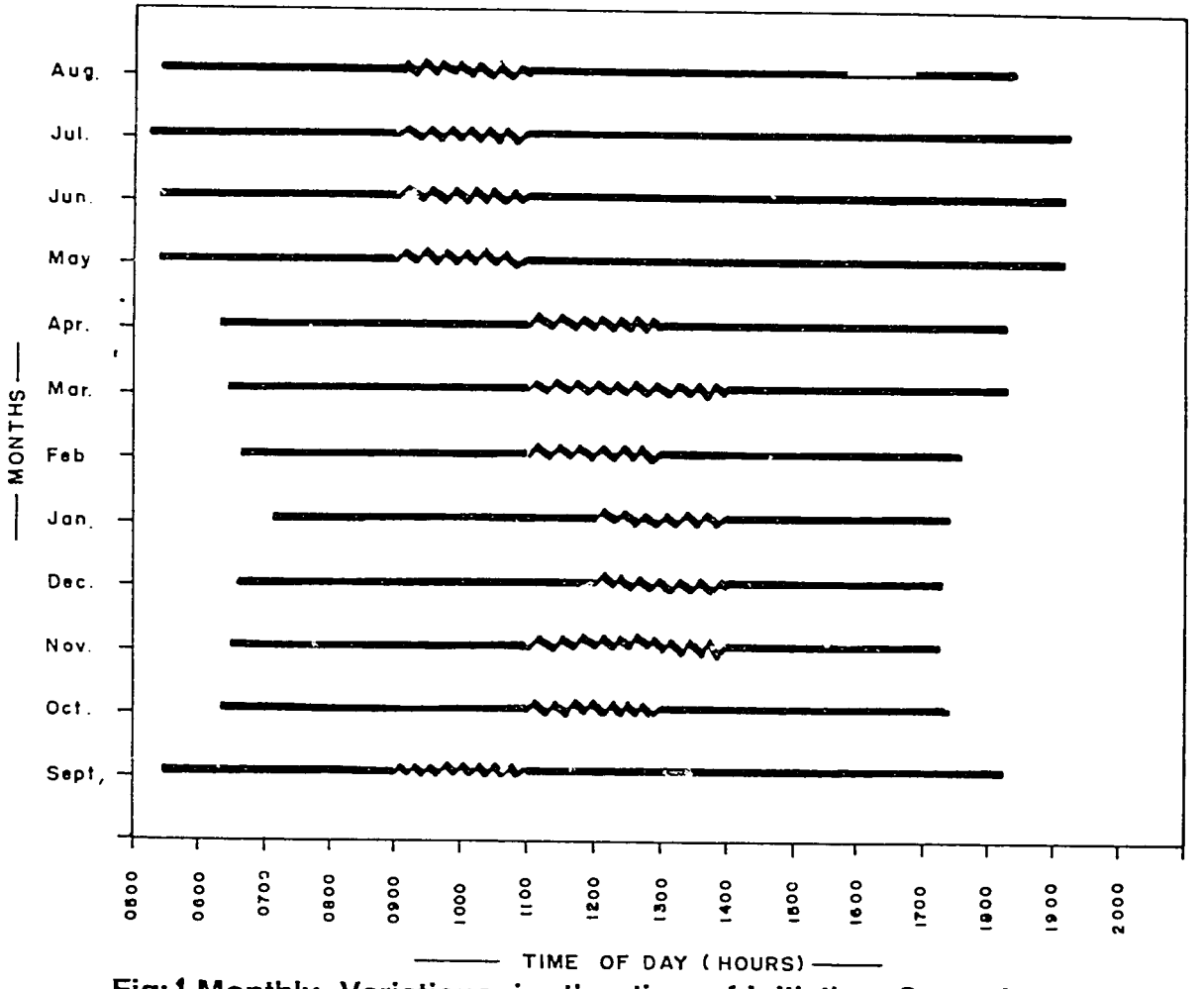

Fig: 1. Monthly Variations in the time of Initiation, Cessation and Peak Hours of Foraging Activity of Apis cerana

Peak Foraging Hours

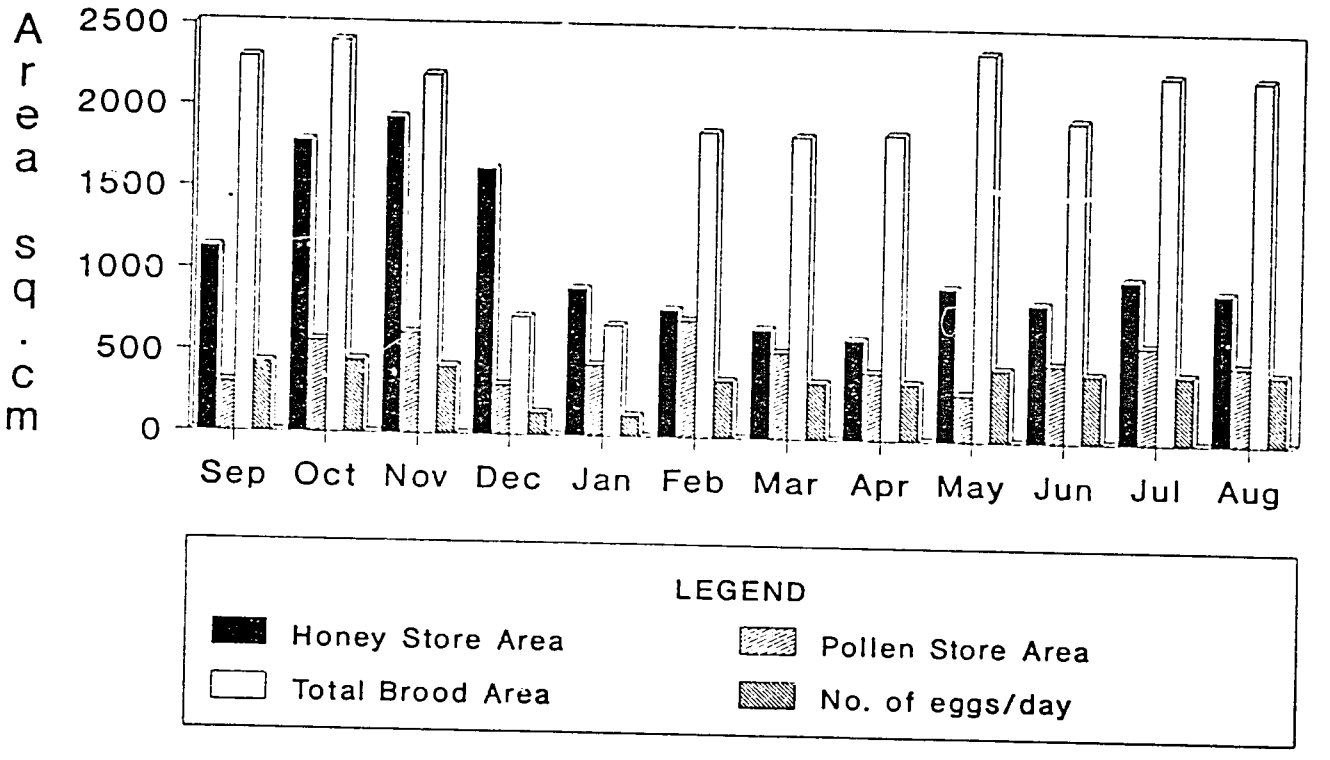

FIGURE 2. VARIATIONS IN ECONOMIC AND BIOLOGICAL CHARACTERS OF *APIS CERANA*.

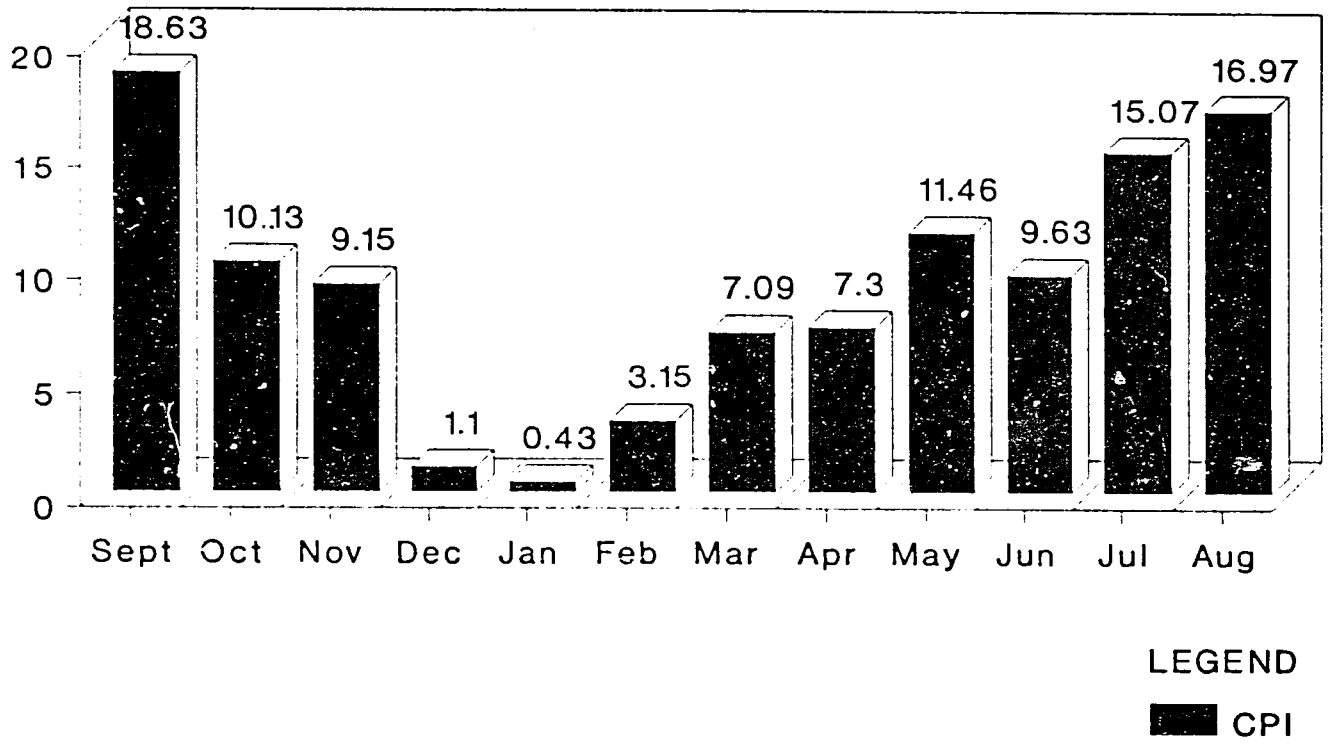

FIGURE 3. VARIATIONS IN COLONY PERFORMANCE INDEX (CPI) OF *APIS CERANA*.

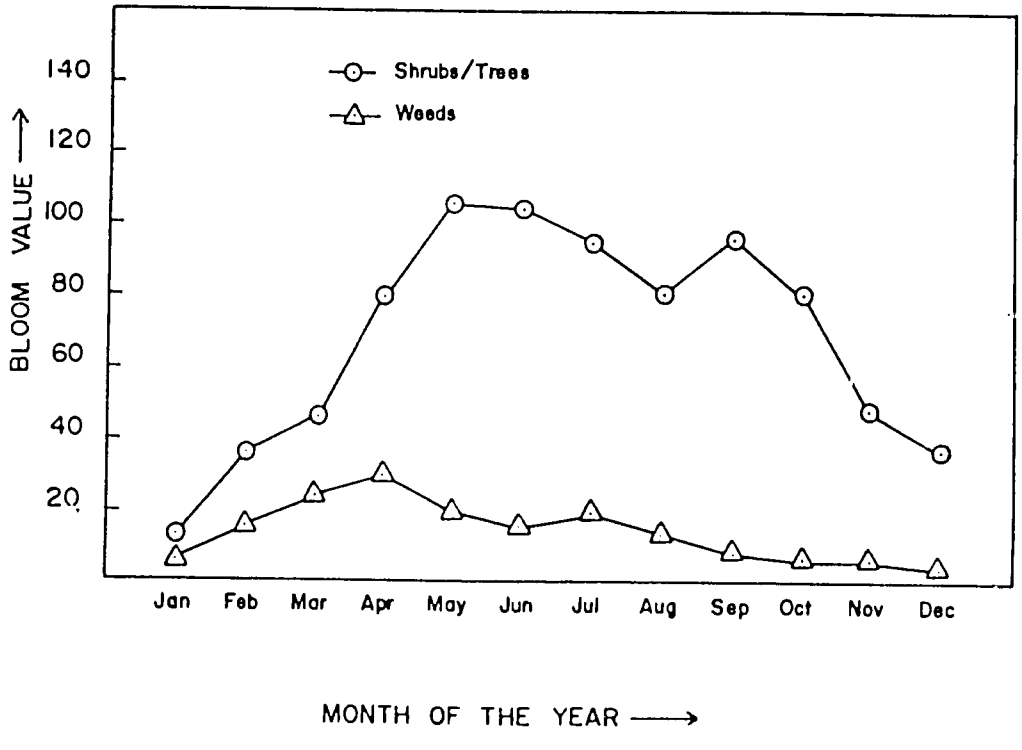

FIGURE 4. MEAN BLOOM VALUES FOR TREES AND SHRUBS OVER PLOTS AND FOR WEEDS OVER TRANSECTS FOR EACH MONTH OF THE YEAR.

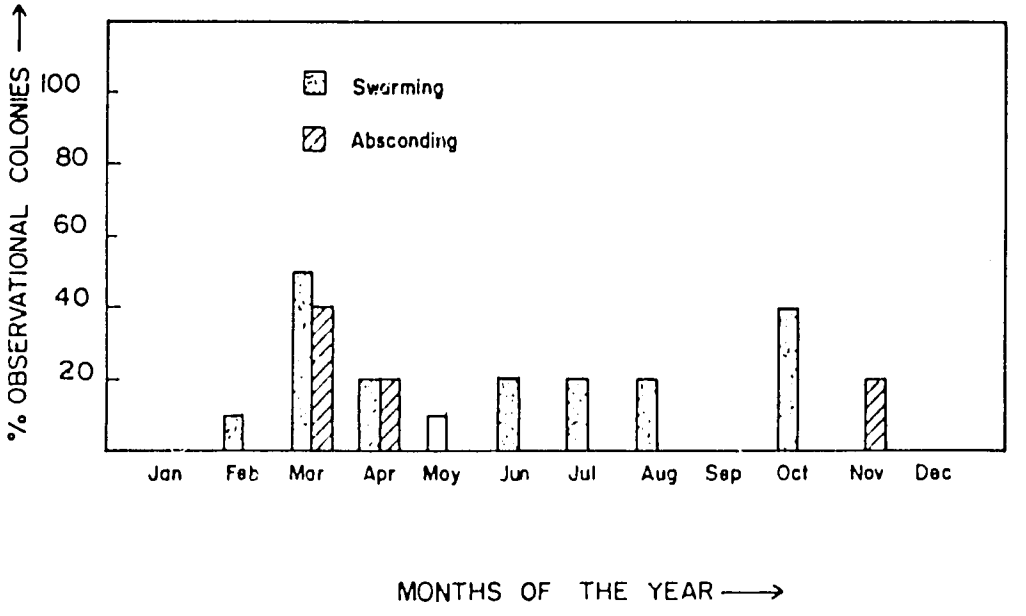

FIGURE 5. PERCENTAGE OF COLONIES OF *APIS CERANA* EXHIBITING CHARACTERISTICS OF SWARMING AND ABSCONDING DURING EACH MONTH OF THE YEAR.

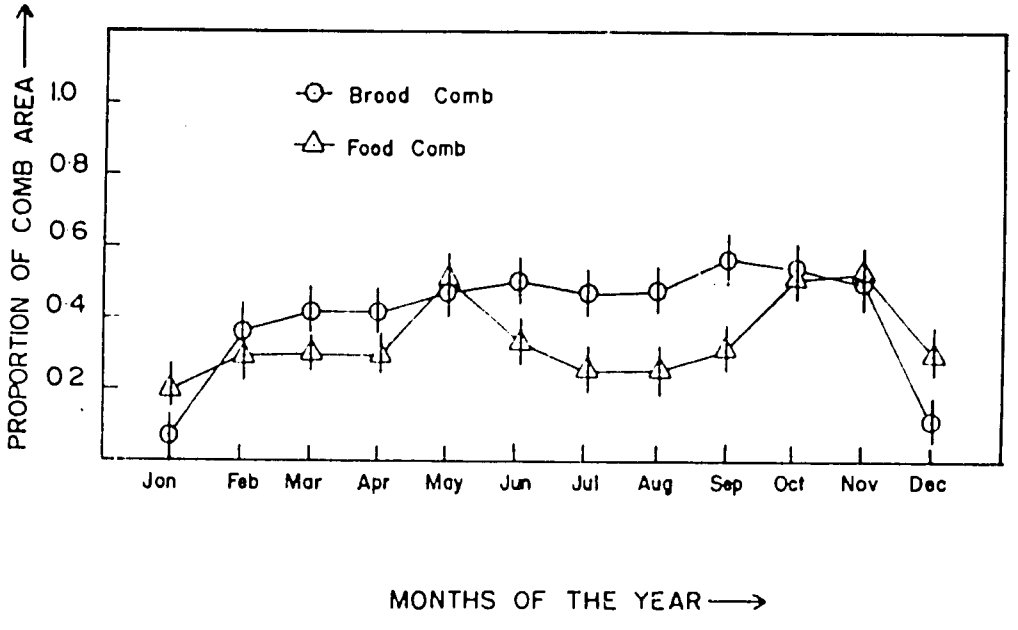

FIGURE 6. PROPORTIONS OF COMB AREA UNDER BROOD AND FOOD IN THE COLONIES OF *APIS CERANA* DURING EACH MONTH OF THE YEAR. VALUES ARE MEAN ± SE.

5f. Beekeeping Training and Demonstration Support

During the project period, two beekeeping training camps at "train the trainer" and "train the farmer" level were held in collaboration with HMG Nepal/UNDP Shivapuri Integrated Watershed Project and Himal Bee Concern (an NGO) in Kathmandu, Nepal. The trainees were exposed to modern apiary management practices. In these training courses, about 100 beekeepers, extension workers, technicians, vegetable seed growers and women social workers participated. Several of these trainees were provided with bees, beekeeping equipment and necessary technical follow up help to ensure success of these training courses on sustainable basis.

Beekeeping field demonstration were held in HMG Nepal/FAO Vegetable Seed Production Farm in Khumaltar, Kathmandu to show the advantages of bee pollination for vegetable seed production and another one in Mulkhera Village of Shivapuri Watershed area exhibiting beekeeping as a source of cash income and nutritious food. A demonstration apiary of 50 *Apis cerana* colonies has also been set up at ICIMOD's trial and demonstration site in Godavari near Royal Botanical Garden in Kathmandu valley.

5g. Networking and Information Exchange

This project has been very successful networking of beekeeping and development activities in seven ICIMOD countries and outside. Collaborating institutions for this project research work include departments of Agriculture, Livestock, Vegetables, HMG Nepal; Himal Bee Concern and R. Labb (NGO) Nepal; Department of Bio-Sciences, H.P. University Shimla, Department of Agriculture and Horticulture in J and K, Central Bee Research Institute Pune, India; Department of Agriculture RG Bhutan;PARC Pakistan; Institute of Beekeeping Research, Beijing, China and Swedish Beekeeping project in Bangladesh.

Besides, Principal Investigator of this project has been rendering advisory/consultancy services in beekeeping research, development and training to different national, bilateral and international projects throughout Asia. As such beekeeping is now being an important component of present day strategies for sustainable mountain agriculture and integrated rural development programmes.

Note: *Publications related to beekeeping development work done under the present project are included in the compendium of this final report as MS # 23 to 26.*

6. *IMPACT, RELEVANCE AND TECHNOLOGY TRANSFER*

The present research and development work on Asian hive bee *Apis cerana* will help greatly in promoting the economically and environmentally sound programmes for the socio-economic uplift of the farmers and landless people living at or below subsistence level in Hindu Kush-Himalayan countries. The scientific database generated through this project will facilitate better exploitation of domesticated *Apis cerana* in terms of enhanced productivity of honey and other hive products, better pollination activities to boost productivity of farming systems and conservation of bio-diversity. The results of the present scientific research will form the basis for the overall development and promotion of beekeeping industry not only in developing countries of Asia but in other parts of the world where beekeeping with *Apis mellifera* is threatened by parasitic bee mites and highly aggressive/stinging Africanized bees.

The natural organic hive products from commercially valuable sub-species of *Apis cerana* as identified through the present research work from far inaccessible and remote mountain areas of Hindu Kush-Himalayan region will not only be an important source of organic health and nutritive food but also can be marketed at a premium price in foreign countries thus becoming an important source of cash income to poor farmers in such remote areas. Thus the direct benefiaries from the proposed project are researchers, extension workers, farmers/beekeepers, policy makers, planners and aid agencies in the area of agriculture, horticulture, live stock and forestry. The native *Apis cerana* also have a primary function in natural eco-systems which involve plant reproduction, gene flow, cross fertilization and conservation of bio-diversity. The scientific results of the present research work will facilitate the harnessing of these non-consumptive benefits in a more effective way by planning strategies for conservation of *Apis cerana* through development and promotion of beekeeping.

This project has greatly helped in strengthening *Apis cerana* research and development programme in ICIMOD. This centre has now attached great importance to beekeeping as an essential component of Mountain Farming Systems offering several comparative advantages with positive ecological consequences. This is evidenced by the fact that ICIMOD provided funding from its core project to

supplement this project grant for publishing important documents on bees and beekeeping. These include a manual entitled "Asian Hive bee, *Apis cerana* as Pollinator in Vegetable Seed Production: An Awareness Handbook", Hindi-Chinese-English volume of "Dictionary of Beekeeping Terms" published in collaboration with International Bee Research Association, London and also video film on "Migratory Beekeeping in NWFP Pakistan". Currently two more manuals namely "Pollination Ecology of Temperate Fruits" and "Pesticide Use Safe for Bees" are in preparation. Besides training in modern beekeeping with *Apis cerana* was also funded from the core funds of ICIMOD.

ICIMOD has greatly benefitted from the present USAID-PSTC grant in terms of experts, infrastructure, equipment and material. Principal Investigator of this project under this grant got the opportunity to learn the latest techniques in classical and molecular taxonomy through short term research assignments in University of California, Berkeley and USDA-ARS Honeybee Breeding, Genetics and Physiology Research Laboratory in Baton Rouge Louisiana. Principal Investigator of this project also got the opportunity to present the results of the present project research work in several international conferences/seminars held in Asia and outside (for details please see 7a.). For the scientific research work carried under the project PSTC grant, the Principal Investigator (Prof. L.R. Verma) of this project received following international honours and recognitions.

1. Elected **HONORARY MEMBER OF APIMONDIA** (1993), a global body representing beekeeping associations of more than 70 countries in recognition of contribution to the development of beekeeping world wide. First scientist from Asia and developing countries to receive this honor.
2. Senior Vice-President and Founder Member of Asian Apiculture Association, Tokyo, Japan, (1991-Present).
3. Chairperson of Steering Committee of "**BEENET ASIA PROGRAMME**", Kualalumpur, Malaysia (1992-Present).
4. Vice-President of Asian Apitherapy and Acupuncture Association, Nanjuig, China (1992-Present).

Similarly about half a dozen students and lab technicians were trained in biological research methodology especially in the area of taxonomy, behaviour and modern apiary management practices.

7. *PROJECT ACTIVITIES/OUTPUTS*

7a. Travel: **Principal Investigator and other project staff travelled to the following countries in connection with project research work and international conferences.**

Date	Country	Purpose
June 24-July 23, 91	Himachal Pradesh and Jammu regions of India	Bee survey and sample collection work
September 22-27, 91	Jumla region of Nepal	Bee survey and sample collection work
December 20, 91-Jan 3, 92	Pune and Shimla in India	Scientific literature consultation and sample collection work
February 9-14, 92	Bangkok	International Conference on Asian Bees and Bee Mites
April 16-May 5, 92	Shimla in India	Morphometric research work in Himachal Pradesh University Shimla, India
June 28-July 4, 92	Beijing, China	XIX International Congress of Entomology. Chaired a technical session on *Apis cerana* and other honeybees of Apidae and delivered a key note address "Strategies for Conservation of Asian Hive Bee, *Apis cerana*"
August 3-6, 92	Serdang, Malaysia	International workshop on priorities in R&D on Beekeeping in Tropical Asia and delivered a special lecture entitled "A Framework for R&D on Beekeeping with *Apis cerana* in Asia Elected Chairperson of "BEENET ASIA PROGRAMME"
August 7-9, 92	Honolulu, Hawaii, USA	USAID Network meeting on Biodiversity Projects

August 10-13, 92	Honolulu, Hawaii, USA	AIBS annual meeting
August 14-19, 92	University of California, Berkeley, USA	Morphometric Research Work
August 19-23, 92	USDA-Bee Research Lab, Beltsville, Washington	Bee Pathology Research Work
August 23-September 1, 92	USDA-Bee Research Lab, Baton Rouge, Louisiana, USA	Molecular Research Work
October 5-19, 92	Sri Nagar, Garhwal, India	Project Research Work and participated in National Workshop on Bio-diversity and delivered "Current State of Himalayan Honeybee (*Apis cerana*) Biodiversity and Strategies for its Conservation".
February 26-March 11, 93	Shimla, India	Project Research Work
September 20-26, 93	Beijing, China	XXXIII APIMONDIA International Congress, Chaired a session on Asian Bees and delivered a key note address " *Apis cerana*" in Global Beekeeping and first Scientist from developing countries to be elected "Honorary Member of APIMONDIA"

LIST OF PROJECT PUBLICATIONS

Genetic Diversity and Morphometric Research

1 Current state of Himalayan honeybee (*Apis cerana*) biodiversity and strategies for its conservation. In: Himalayan Biodiversity: Conservation Strategies (ed) U. Dhar. pp. Gyanodaya Prakashan, Nainital, India, pp. 415-428, 1993.

2 Declining Genetic Diversity of *Apis cerana* in Hindu Kush-Himalayan region. In: Asian Apiculture. (eds) Lawrence J. Conner, Thomas Rinderer, H. Allen Sylvester and Siriwat Wongsiri. Wicwass Press, Cheshire, Connecticut, USA. pp. 81-88, 1993.

3 Genetic diversity in *Apis cerana*. Beekeeping and Development : 1993, No. 26. pp. 11.

4 Genetic diversity in Himalayan honeybee, *Apis cerana* F. Proc. USAID-PSTC/CDR Networking Meeting on Bio-diversity, Honolulu, Hawaii, 1992.

5 Strategies for conservation of Asian hive bee, *Apis cerana*. Asian Apicultural Association Newsletter 4: 2-3, 1993.

6 Strategies for Conservation of Asian Hive Bee *Apis cerana*. Proc. Int. Entomol. Cong. Beijing, July, 1992.

7 Multivariate morphometrics of the Indian honeybee in the northwest Himalayan region. Apidologie. 25: 1-21, 1994.

8 Multivariate morphometrics of the Indian honeybee in central (Uttar Pradesh and Nepal) Himalayan region. J. Apic. Res. (MS in preparation).

Pollination Research

9 Floral biology and foraging behavior of *Apis cerana* on lettuce crop and its impact on seed production. Progress. Hortic. 24 (1-2), 1992.

10 Potentials of *Apis cerana* as pollinator for increasing global food production. In Pollination in Tropics. Proc. (eds) G.K. Veeresh, R. Uma Shanker and K.N. Ganeshaiah. Published by IUSSI-Indian chapter, Banglore. pp. 296-301, 1993.

11 Pollination of vegetable crops using Asian hive bee, *Apis cerana* in Kathmandu valley of Nepal. (IBID). pp. 184-186.

12 Foraging behavior of *Apis cerana* on cole vegetable crops and its impact on seed production. J. Apic. Res. (in press).

13 Asian Hive Bee *Apis cerana* as a pollinator of the radish flower and its impact on seed production. J. Apic. Res. (in press).

14 Comparative foraging behavior of *Apis cerana* and *Apis mellifera* on Indian mustard (*Brassica juncea* var Khumal Broad Leaf) flower in Kathmandu valley, Nepal. Progressive Hortic. (in press).

15 Vegetable seed production using Himalayan honeybee (*Apis cerana* F) as pollinator in Kathmandu valley: Indian Mustard. Progressive Hortic. (in press).

16 Insect pollination of eggplant (*Solanum melongena* var Pusa Purple Long) in Kathmandu valley of Nepal. Progressive Hortic. (in press).

17 Pollination strategies for conservation of biodiversity in Hindu-Kush Himalayan Region. Proc. UNESCO Workshop on Conservation and Management of Biological Resources in Himalaya. Srinagar, Garhwal, India, 1993.

18 Bee pollination and biodiversity conservation in Himalayas. Regional Conference on Environment and Biodiversity, Kathmandu, Nepal, March, 1994.

19 The Role of Bees in Pollination. In: Regenerative Agriculture Technologies for the Hill Farmers of Nepal: An Information Kit, NERRA, Nepal and IIRR, Philippines, 1992.

20 Honey and honeybees in forest ecosystem. Proc. National seminar on Forest Produce Coimbatore, India, 1993.

Behavioural Research

21 Impact of food resource availability on growth and development of *Apis cerana* in Kathmandu valley of Nepal. (Communicated).

22 Seasonal patterns of foraging activity in colonies of Asian hivebee *Apis cerana* F. in Kathmandu valley of Nepal. (Communicated).

23 A Framework for R & D on Beekeeping with Asian Hive Bee *Apis cerana*. Proc. Beenet Asia: Workshop on priorities in R & D on Beekeeping in Tropical Asia, Serdang, Malaysia. Universiti Pertanian, Malaysia, Southbound, pp 75-88, 1993.

24 *Apis cerana* in global beekeeping. Proc. XXXIII APIMONDIA Int. Beekeeping Conf., Beijing, China, 1993.

25 Asian Apiculture Association: Its Concepts and Challenges. Inaugural Asian Apiculture Association Newsletter, 1991.

26 Contribution of Asian hive bee to crop production and income. Proc. ICIMOD 10th anniversary symposium, Kathmandu, Nepal, 1993.

Manual:

Asian Hive Bee *Apis cerana* as Pollinator in Vegetable Seed Production (Awareness and Practical Handbook). 52 pp. ICIMOD Publication.

Dictionary:

Dictionary of Beekeeping Terms : English-Hindi-Chinese Volume XI. ICIMOD Publication.

Video Film:

Migratory beekeeping as an off-farm income generating activity especially in Pakistan. An ICIMOD production.

Note: All full length research papers, popular articles, books etc. published/communicated/under preparation from this project work submitted separately as a compendium to this final report.

8. *PROJECT PRODUCTIVITY*

This project has been very successful in accomplishing all the proposed goals. This is evidenced by the fact that about 26 scientific research papers/popular articles/review papers have been published/communicated/under preparation. Besides, one manual/awareness handbook on *Apis cerana* pollination of vegetable crops, a dictionary of beekeeping terms (English-Hindi-Chinese volume) and a video film on Migratory Beekeeping as an Off-farm Income Generating Activity have been published/prepared during the tenure of this project.

9. *FUTURE WORK*

One major objective of the USAID-PSTC grant is to provide seed money for initiating scientific research in an area which is of direct relevance to the economic development and environmental conservation of that particular country or region. It is expected that from PSTC grant will form the basis for a long term sustainable research programme of permanent nature with funding from national and other international funding agencies. The present project has been highly successful in achieving the objective. This is evidenced by the fact that now ICIMOD received grant for next phase of *Apis cerana* beekeeping research and development grant on long term basis from Federal Chancellory of Austria with focus on selection and breeding work of *Apis cerana*, building of bee collected pollen data bank to monitor plant bio-diversity, bee pollination and apiary management practices. As such, the present genetic diversity, bee pollination, behaviour and apiary management research initiated through USAID-PSTC grant is being continued now in ICIMOD with financing assistance from Federal Chancellory of Austria for a period of another five years.

Besides Austria, other donor agencies while appreciating the research efforts made through PSTC grant to promote beekeeping research and development for integrated development of Hindu Kush-Himalayan region have also expressed interest in *Apis cerana* research and development programme in ICIMOD.

ICIMOD has now attached great importance to bees and beekeeping research and development programme. This is evidenced by the fact that beekeeping research and development programme is now included in the rolling work/strategic plan of ICIMOD and has the approval of Board of Governors which comprises of its level Government representative of eight ICIMOD countries and independent scientific/technical members of international repute.

The present project was reviewed through site visits during the last three years by ARS-USDA bee scientist team comprising of Dr. Ben Oldroyd and Dr. Gorden Allen-Wardell; Dr. Jill Conley and Dr. Michael Dow from National Research Council/BOSTID and Dr. Christine L. Bargmark and Dr. Wandy Jackson both AAAS Fellows working with Office of the Research in the R&D Bureau of USAID. All these review teams were highly appreciative of the progress made by this project and after these reviews, a proposal to hold an International Conference on "APIS CERANA: A POTENTIAL WORLD GENETIC RESOURCE" was prepared jointly by Dr. Bruce Harrison, Senior Programme Officer BOSTID and Principal Investigator (Prof. L.R. Verma) of this project. This proposal was forwarded for funding assistance to USAID, Washington. USAID Washington expressed its interest in funding this conference but because of financial constraints it had to be postponed. It is hoped that in near future, USAID Washington will make funds available to hold this conference for disseminating the result of this project research work amongst the concerned scientists throughout the world.

10. LITERATURE CITED

Alpatov, W.W., 1929. Biometrical studies on the variation and races of the honeybee (*Apis mellifera* L.) Q. Rev. Biol. 4: 1-58

Al-Tikrity, W.S., Hillman, R.C., Benton, A.W. and Clark, W.W. Jr. 1971. A new instrument for brood measurement in a honeybee colony. Am. Bee. J. 111: 20-21, 26. Butler, C.G., 1974. *The World of Honeybee,* London.

Choi, S.Y., 1984. Brief report on the status of Korean beekeeping. Proceedings of the Expert Consultation ed. FAO. pp. 170-190.

Crane, E. 1992. Beekeeping in mountain life support systems. In: *Honeybees in Mountain Agriculture.* ed. L.R. Verma, Oxford and IBH Publishing Co. New Delhi. pp. 17-28.

Daly, H.V., 1975. Identification of Africanised bees by multivariate morphometrics. Proc. XXV Int. Apic. Congr. Grenoble, France, 356-358.

Daly, H.V. and Balling, S.S., 1978. Identification of Africanised honeybees by discriminant analysis. J. Kansas. Entomol. Soc. 51: 857-869.

Erickson, E.H., Whitefoot, L.O. and Kissinger, W.A. 1973. Honeybees: A method of delimiting the complete profile of foraging from colonies. Envir. Ent. 2: 531-535.

Frisch, K. Von. 1967. *The Dance Language and Orientation of Bees.* Cambridge, MA, USA: Harvard University Press.

Gilpin, M.E and Soule, M.E., 1986. Minimum viable populations: Process of species extinction. In: Conservation Biology: The Science of Scarcity and Diversity. (ed.) M.E. Soule. Senior Associates, Inc. Publishers, Sunderland, Massachusetts.

Kafle, G.P., 1984. Bee forage in and around Kathmandu valley. Naplese J. Agric. 15: 89-99.

Kapil, R.P., 1956. Variations in the biometrical characters of the Indian honeybee (*Apis indica* F.). Indian J. Entomol. 18: 440-457.

Kshirsagar, K.K., 1976. Studies on Indian Apidae with special reference to Indian hive bee, *Apis cerana* F. Ph.D. Thesis. University of Poona, Pune, India.

Maskey, M., 1992. Mountain women and beekeeping in Nepal. In: *Honeybees in Mountain Agriculture.* ed. L.R. Verma, Oxford and IBH Publishing Co. New Delhi. 119-132.

McNally, L.C. and Schneider, S.S., 1992. Seasonal cycles of growth, development and movement of African honeybee, *Apis mellifera scutellata* in Africa. Ins. Soc. 39:167-179.

Narayanan, E.S., Sharma, P.L. and Phadke, K.G., 1960. Studies on biometry of the Indian bee. 1. Tongue length and number of hooks on the hind wings of *Apis indica* F. Indian Bee J. 22: 58-63.

Narayanan, E.S., Sharma, P.L. and Phadke, K.G., 1961 a. Studies on biometry of the Indian bees. IV. Tongue length and number of hooks on the hind wings of *Apis indica* F. collected from Madras State. Indian Bee J. 23: 3-9.

Narayanan, E.S., Sharma, P.L. and Phadke, K.G., 1961 b. Studies on biometry of the Indian bees. IV. Tongue length and number of hooks on the hind wings of *Apis indica* F. collected from Uttar Pradesh. Indian Bee J. 23: 69-74.

Norusis, M.J., 1985. SPSS^x: *Advanced Statistics Guide*. McGraw-Hill Book Company; New York; 505. pp.

Punchihewa, R.W.K., Koeniger, N. and Howpage, D., 1990. Absconding behaviour of *Apis cerana* in Srilanka In: *Social Insects and the Environment*. eds. G.K. Veeresh, B. Mallik and C.A. Viraktamath. IUSSI, India.

Rohlf, F.J., 1987. Numerical taxonomy and multivariate analysis system for IBM, PC microcomputer (and compatibles). Applied Biostatistics. Inc: Setauket, New York: 36 pp.

Ruttner, F., 1988. *Biogeography and Taxonomy of Honeybees*. Berlin; Springer Verlag.

Sakai, T., 1992. *Apis cerana* beekeeping in Japan. In: *Honeybees in Mountain Agriculture*. ed. L.R. Verma. Oxford and IBH Publishing Co. New Delhi. pp. 235-238.

Smith, F.G., 1961. Races of honeybees in East Africa. Bee Wld. 42: 255-260.

Sneath, P.H.A. and Sokal, R.R., 1973. *Numerical Taxonomy*. W.H. Freeman and Company, San Francisco. 573 pp.

Singh, M.P., Verma, L.R. and Daly, H.V. 1990. Morphometric analysis of the Indian honeybee in the northeast Himalayan region. J. Apic. Res. 29: 3-14.

Verma, L.R., Mattu, V.K. and Daly, H.V., 1994. Multivariate morphometrics of the Indian honeybee in the northwest Himalayan region. Apidologie 25: 1-21.

Zhen-Ming, J., Guanhuang, Y., Shuangxiu, H., Shikui, L. and Zaijin, R., 1992. The advancement of apicultural science and technology in China. In. *Honeybees in Mountain Agriculture*. ed. L.R. Verma. Oxford and IBH Publishing Co. New Delhi. pp. 133-148.