-PN ABS-029
84330

U.S. Agency for International Development

New Independent States Task Force/
Energy Efficiency and Market Reform Project
and Bureau of Research & Development/
Office of Energy & Infrastructure

Energy Supply Options for the Republic of Armenia

Prepared by
Energy Technology Innovation Project
Contract No. DHR-5741-Q-00-1062-00
Delivery Order No. 3

Prime Contractor: Bechtel Corporation

November 1993

Contents

Section		Page
	Executive Summary	**ES-1**
1.0	**Introduction**	**1-1**
	1.1 Background	1-1
	1.2 Present Energy Situation	1-1
	1.3 Availability of Information	1-2
	1.4 Presentation Objectives	1-3
	1.5 Periods of Evaluation	1-4
2.0	**Liquid Fuels Assessment**	**2-1**
	2.1 Emergency-Term Requirements	2-1
	2.1.1 Diesel	2-2
	2.1.2 Mazout	2-4
	2.1.3 Kerosene	2-5
	2.2 Near-Term Requirements	2-8
	2.2.1 General	2-8
	2.2.2 Fuel Consumption by Major Sector	2-8
	2.2.3 Liquid Fuels Import Agreements	2-10
	2.2.4 Alternative Schemes of Liquid Fuel Transportation, Exclusive of Mazout	2-12
	2.2.5 Transportation of Mazout	2-13
	2.2.6 Transportation Cost	2-13
	2.2.7 Liquid Fuel Prices	2-13
	2.3 Batumi Refinery	2-15
	2.3.1 General and Product Description	2-15
	2.3.2 Liquid Fuel Storage and Loading/Unloading Facilities	2-16
	2.3.3 Tariffs	2-17
	2.3.4 Conclusions	2-18

Section **Page**

2.4 Liquid Fuel Storage 2-20

2.4.1 Existing Storage Capacity 2-20
2.4.2 Future Storage Requirements 2-21

3.0 Gaseous Fuels Assessment 3-1

3.1 General 3-1
3.2 Emergency-Term Requirements 3-6
3.3 Long-Term Requirements 3-8

4.0 Solid Fuels Assessment 4-1

4.1 Coal 4-1

4.1.1 Status of Coal Prospecting in Armenia 4-5
4.1.2 Descriptions of Key Coal and Peat Deposits 4-6

4.2 Peat 4-10
4.3 Wood 4-10
4.4 Conclusion 4-10

5.0 Indigenous Oil and Gas Exploration 5-1

5.1 General 5-1
5.2 Prospective Sites 5-1
5.3 Drilling Plan 5-6
5.4 Drilling Activity 5-6
5.5 Cost of Drilling 5-6
5.6 Gas and Oil Uses 5-8

6.0 Emergency Stoves 6-1

7.0 Transportation 7-1

7.1 Port of Batumi 7-1

7.1.1 General Description 7-1
7.1.2 Port Charges and Tariffs 7-6
7.1.3 Conclusions 7-7

2

Section **Page**

7.2 Railroad 7-7

7.2.1 General Information 7-7
7.2.2 Tariffs 7-13
7.2.3 Conclusions 7-13

7.3 Truck Transport 7-14

8.0 Yerevan Electrical Distribution System 8-1

8.1 Present System Status 8-1
8.2 Remedies 8-2

9.0 Energy Supply Options 9-1

9.1 Energy Supply Options Summary 9-1

9.1.1 Option 1 - Purchase Dedicated Fuel and Stoves for Survival . . 9-1

9.1.2 Option 2 - Purchase Dedicated Supplies of Mazout 9-2

9.1.3 Option 3 - Implement Emergency Electricity Supply to Critical Facilities 9-2

9.1.4 Option 4 - Procure and Install Electrical Equipment for the Repair of the Distribution Network (Yerevan) 9-2

9.1.5 Option 6 - Ensure Minimum Gas Allocation 9-6

9.1.6 Option 8 - Drill for Indigenous Oil and Gas 9-7

9.1.7 Option 10 - Clean and Upgrade Natural Gas Lines from Mozdok (Russia) to Yerevan 9-7

9.1.8 Option 11 - Relocate and Upgrade Airoum Compressor Station 9-8

9.1.9 Option 12 - Exploration of Indigenous Coal and Peat Deposits . 9-8

2

Section **Page**

9.1.10 Option 13 - Provide Technical Assistance for Contract Negotiations on Southern Pipeline 9-12

9.1.11 Option 14 - Construct a Southern Pipeline for Both Gas and Liquid Products 9-12

9.1.12 Option 15 - Increase Long Term Fuels Storage Capacity (Study) 9-14

9.1.13 Option 16 - Install LPG Recovery Plant for Indigenous Gas . . 9-14

9.1.14 Option 18 - Procure and Install Gas Meters - Develop Rate Collection Program 9-15

9.1.15 Option 19 - Optimize Gas Distribution System 9-15

9.1.16 Option 20 - Procure Additional Fuel Distribution Equipment . . 9-16

9.1.17 Option 21 - Systematic Testing of High and Low Pressure Gas Distribution Piping 9-16

9.1.18 Option 23 - Install an LPG Recovery Plant for the Southern Pipeline (Study) 9-17

9.2 Cost Estimate Summary 9-17

9.3 Options Schedule 9-17

4

Illustrations

Figure		Fage
3-1	Natural Gas Transmission Pipeline	3-2
3-2	Gas Distribution System in Armenia	3-3
3-3	Average Daily Consumption of Natural Gas in Armenia	3-4
3-4	Gas Pipeline System from Mozdok to Abovian	3-5
4-1	Coal, Peat, and Bituminous Shale Deposits in Armenia	4-2
5-1	Oil and Gas Prospects in Armenia	5-3
6-1	Sketch of Coal Stove Manufactured at the Armenergoremont Plant	6-4
6-2	Sketch of Kerosene Stove Manufactured at the Arvin Plant in Kirovokan	6-5
6-3	Sketch of Kerosene Stove Manufactured at the Gasmash Plant	6-6
6-4	Sketch of a Universal Stove (Coal, Wood, Kerosene, Diesel Fuel) Manufactured O.G.E.U.'s O.E.Z. Plant	6-7
7-1	Port of Batumi Schematic	7-3
7-2	Location and Capacity of Cranes at the Port of Batumi	7-4
7-3	Port of Batumi Railroad Spurs	7-5
7-4	Map of Railroad System from the Port of Batumi to Yerevan	7-9
7-5	Plan of the Batumi Railroad Station	7-11
7-6	Normal and Maximum Allowable Dimensions of General Cargo on Flatbed Cars	7-12
9-1	Schematic of Southern Gas and Liquid Fuel Pipelines	9-13
9-2	Energy Supply Options Schedule	9-24

5

Tables

Table		Page
2-1	Annual Diesel Fuel for Critical Conditions	2-2
2-2	Estimated Cost of Purchasing and Transporting 13,000 Tons of Diesel Fuel	2-3
2-3	Restricted Use of Diesel Fuel	2-3
2-4	Mazout Storage at Power Plants	2-4
2-5	Cost of Purchasing and Shipping Mazout from Batumi to Armenia	2-5
2-6	Restricted Power Plant Loads	2-5
2-7	Estimated Cost of Emergency Kerosene Supply	2-7
2-8	Liquid Fuel Use by Sector	2-8
2-9	Liquid Fuel Consumption by Public Transport	2-10
2-10	Liquid Fuel Supplied by Russian Refineries	2-11
2-11	Current Liquid Fuel Market Prices in Armenia	2-14
2-12	Properties of Batumi Oil Refinery Products	2-15
2-13	Cost of Unloading Liquid Fuel in the Port of Batumi	2-18
2-14	ARMOIL's Existing and Future Liquid Fuel Storage Capacities	2-20
2-15	GoA Summary of 1991 Storage of Liquid Fuels	2-22
4-1	Home Heating Fuels - Comparison of Costs for Various Heat Sources	4-3
4-2	Heating Value of Solid Fuels in Armenia	4-5
4-3	Stages of Evaluation for Solid Fuel Deposits	4-6
4-4	Solid Fuel Deposits in Armenia	4-7

6

Table		Page
5-1	Prospect Features	5-2
5-2	Hypothetical Drilling Program	5-7
5-3	Hypothetical Well Production to Meet Critical Need	5-7
6-1	Indication of Armenian Stove Manufacturing Capacity	6-3
7-1	Rail Car Tariffs	7-13
7-2	Liquid Fuel Transportation Data	7-13
9-1	"Decision 61" Materials	9-3
9-2	List of Materials and Spare Parts Needed for Maintenance of the Distribution Network of ARMENERGO for the Winter of 1993/94	9-4
9-3	Estimate of Minimum Equipment Necessary for Coal Exploration	9-11
9-4	Equipment Required for Fuel Distribution	9-16
9-5	Cost Evaluation of Energy Options Summary	9-18

Executive Summary

The energy crisis in Armenia has been exacerbated by one of the most severe winters in recent history. Moreover, the energy situation is not expected to improve unless immediate and substantial foreign assistance is provided. Depending upon fuel imports for 95% of its needs, Armenia is faced with a blockaded border to the east and west, and uncertain supply routes from the north. Armenia's only current means of importing fuel is a natural gas pipeline and one rail line from Georgia. However, both routes have been damaged for significant periods of time. The gas line, for example, has been the target of recurring terrorist attacks, leaving Armenia without gas on numerous occasions since November 1992.

The United States Agency for International Development's NIS/Task Force/Energy Environment Technology (NIS/TF/EET), recognizing the need to assist Armenia, requested support from the Bureau of Research and Development, Office of Energy and Infrastructure (R&D/E&I) to assess energy supply options focusing on emergency (1993/1994 winter) and near-term (1994/1995 winter) needs.

A team from R&D/E&I's Energy Technology Innovation Project (ETIP) spent over 25 person-weeks assessing the energy supply needs and options of Armenia during March-July 1993. In this process, the group interfaced with the various ministries, operating companies, technical institutes, and industrial operations within Armenia and Georgia. The analysis of this effort leaves no doubt that Armenia's need for energy is critical. The conclusions reached by the team are that an immediate and substantial increase in fuels supply must be provided, to meet the current emergency and the near-term needs. Two sets of options were identified: options to meet the emergency needs, and options to meet near-term needs.

Emergency options will provide measures that would alleviate extremely severe conditions for the winter of 1993/1994. During the winter of 1992/1993 for example, power outages totaling 23 days were caused by the absence of a dedicated, reserved quantity of fuel that could be utilized in the event of an emergency. Moreover, district central heating in Yerevan was shutdown during the winter of 1992/93 due to a lack of fuel. Actions must be taken now to assure that the hardships of the past are not repeated. Recommendations for this upcoming winter include:

- Dedicated reserves be provided and maintained
- Electrical equipment be procured and installed to replace and repair the damaged distribution system
- Uninterrupted electrical power be provided to critical facilities such as hospitals, bakeries, and communications facilities

One attractive near-term method of supplementing energy supplies would be the development of indigenous oil and gas reserves. The assessment of existing data and information reveals a substantial potential for oil and gas production. This report recommends an effort to develop these resources. The estimated cost to prove the existence of oil and gas in commercial quantities is $15 million to $20 million.

A long-term option is to increase fuel imports by completing the pipelines from the south. This includes the construction of pipelines from Tabriz to Meghri. The estimated cost for these natural gas and oil products pipelines is $200 million.

Overall, the objective of this report is to provide a number of emergency and near-term recommendations to improve Armenia's energy supply. The focus of these recommendations is on the establishment of the infrastructure to support Armenia's energy supply (indigenous and imported), storage, and distribution needs. This report may then be utilized by lending institutions and government agencies to facilitate their own evaluations and development of suitable lending opportunities.

During the preparation of this document, the ETIP team gained valuable information during its support of the pre-consultative group meetings in Paris and Washington, D.C. Additionally, the team has worked closely with members of the World Bank to establish appropriate options for a proposed energy sector project for Armenia.

The full support of the Government of Armenia and the Ministry of Energy and Fuels has been provided the team while in Armenia as well as during the development of this report. Two senior members from the Ministry of Energy and Fuel were made available at ETIP's offices to assist in the review and finalization of the data incorporated in the report.

Landlocked, undeveloped hydrocarbon resources, tenuous supply routes, and strained relationships confront Armenia. Several arrangements were made by the Armenian Government to provide fuel and power in anticipation of the 1992/1993 winter. Unfortunately, most of these measures did not materialize. The time needed for the development of natural energy resources will extend beyond the 1993/1994 winter. Consequently, an immediate, temporary solution needs to be achieved for the 1993/1994 winter requiring the international community's assistance.

9

Section 1
Introduction

1.1 BACKGROUND

Armenia is a landlocked country approximately the size of Maryland. The country has suffered severe energy shortages due to a blockade of its borders resulting from the conflict between Azerbaijan and the region of Nagorno-Karabakh. This blockade has been in effect since 1989, leaving the only route for supplies of grain, oil, and gas through a narrow corridor on the border with Georgia. The Georgian government has stated that it will guarantee the safety of the deliveries, but its own civil unrest and the heavy population of Azerbaijan in the border area make protection of this lifeline precarious. The pipeline carrying natural gas to Armenia and the railroad have been destroyed numerous times near this border crossing.

Armenia is dependent on imported energy for 95% of its needs. At present, nearly 100% of the fossil fuels used are imported. However, the flow of energy resources has been reduced to an intermittent trickle. The winter of 1992/1993 left homes, offices, and factories without heat or electricity due to curtailments of gas. Electricity supplies through the remainder of the year were limited to a few hours per day resulting in an economy that has deteriorated into a downward spiral. The consequential economic and social crises have degenerated into a disaster.

1.2 PRESENT ENERGY SITUATION

The present minimum demand for energy and fuels is based on meeting the survival needs of the population. Additional energy demand arises from the needs of certain essential industries to maintain a minimum level of industrial production and economic activity. These additional needs are only slightly less critical than the primary needs for survival of the population because they relate to the survival of the nation's economic viability and long-term health.

Armenia's historical energy-use patterns provide an indication of current and near-term requirements. The past use of energy depended heavily on natural gas. All power boilers and central heating stations are capable of dual-firing natural gas and mazout (a residual oil product). The clear preference is clean burning gas. However, no simple method exists for storing substantial quantities of gas, while current mazout storage capability is abundant. The use of natural gas is currently limited to the quantity received via the Georgian pipeline from Tbilisi. In the past, the quantity of gas generally available was sufficient for the needs of the industrial sector and power sector as well as residential consumers. The price and availability of natural gas made it the preferred source of energy for all sectors in Armenia.

The availability and price of natural gas have been changing in recent times. Armenia is currently is at the end of a single gas pipeline that originates in Turkmenistan. The price of natural gas is increasing (but is still well below the world market price), and the users all along the pipeline are having difficulty making payments for natural gas. The inability of downstream users to pay for the gas used causes Turkmenistan to supply less and less. Since Armenia is at the end of the pipeline, it receives less gas than it has contracted for, regardless of its ability to pay.

A similar condition affects liquid fuel supplies. With the border blockaded on two sides, the railroad from Georgia is the only method of obtaining the large quantities of liquid fuels required to survive the winter. This sole railroad passes through the same area of Georgia as the natural gas pipeline and suffers the same periodic interruptions. In the wintertime, the effects of these interruptions are disastrous for the population.

The primary existing route available for the import of fuels is through Georgia. All other borders are closed to Armenia except the small southern border with Iran. Consequently, this report emphasizes the use of the existing route for rail transport and gas transmission on the northern border and views the southern border as having a strong potential as a long-term source of fuels. Clearly, a variety of sources and supply routes is essential to achieve long-term economic strength and security for Armenia.

1.3 AVAILABILITY OF INFORMATION

During the latter part of March and the first half of April, ETIP initially sent a team of four engineers and energy planners to Armenia to investigate and evaluate the energy supply situation. This team gathered information from the Ministries, state utilities, and involved technical institutes. It documented information regarding the supply and use of all fuels, and combined it with information from other sources to attempt to provide a complete picture of the available sources of energy.

One specific area of interest to Armenia was the potential for recoverable indigenous oil and gas reserves. ETIP provided guidance regarding potential concession agreements between Armenia and private developers. Additional emphasis on the oil and gas pipeline systems within Armenia resulted in gaining a comprehensive knowledge of the pipeline system and support operations of the natural gas transmission and distribution complex.

In order to extend the depth of knowledge of Armenian energy resources, ETIP initiated an evaluation of the indigenous coal reserves by sending two coal mining experts to Armenia. These experts were able to perform a first-hand survey of the main coal reserves and assess the potential for immediate exploitation using available or readily available equipment.

Obtaining reliable information in Armenia (or in any other former Soviet Union country) is difficult for a number of reasons. Because the government is new, heads of departments do not appear to have the wealth of information at their fingertips that their predecessors had. Additionally, the previous, centrally planned organization generally did not collect and document essential information at the local level. Therefore, some of the information and data presented in this paper may not be fully documented. However, the report's conclusions are not based solely on data, but represent a consensus among knowledgeable members of Armenian organizations, government officials, and the ETIP team.

1.4 PRESENTATION OBJECTIVES

This report provides basic information on Armenia's energy requirements. It explores a variety of available options for an energy supply and provides an indication of their estimated costs, schedules, and priorities.

This report also describes the alternative courses of action that the GoA could implement to increase the available energy stores for the emergency term (the upcoming winter) and the near-term (a few winter seasons into the future). In the emergency term, the report emphasizes actions that may not necessarily be cost-effective but would ease the severity of the winter for the most vulnerable segment of the population. Recommended near-term actions are more cost-effective and in some cases reflect recommendations that could result in long-term benefits and institutional changes.

Generally, this report addresses the import of fuels (cost, transportation, and storage) and the development of indigenous hydrocarbon resources. Clearly, importing electrical energy could eliminate much of the present pressure on the systems. However, this option cannot be considered as long as the border dispute continues. The power lines which in the past have served Armenia from Turkey, Russia via Georgia, and Azerbaijan cannot be considered a reliable option for the upcoming winters during the present conflict.

The information in this report regarding the expected demand for various types of fuel is presented with the basic assumptions underlying the evaluation. This basic information is followed by an indication of the options available to the GoA. These options are a combination of emergency humanitarian requirements, short-term actions that could be implemented to ease the effects of next winter, and near-term actions that could assist in the return to a more stable economy. However, no implied documentation of the various levels of energy requirements has been made. The minimum levels of energy supply discussed in this report must be considered as order-of-magnitude estimates used to establish capacities and capabilities of transport, storage support facility requirements, and survival-level quantities.

12

This report also makes no attempt to create a national energy policy or to determine how the presented options might be funded. The cost and schedule requirements are indicated for each option, and an attempt was made to present the options as independent items that could be funded by any source. However, there may be some connection between specific options. Each option must be evaluated in the context of all other similar activities that together should effectively address a subsector.

1.5 PERIODS OF EVALUATION

Throughout this report, reference will be made to two general time periods: emergency term and near-term. The emergency term identifies that period between the present day and the upcoming winter. The near-term means the next two winters after the upcoming winter. The near-term will generally reflect sufficient time to establish policies and practices to initiate an expansion of the Armenian economy beyond pure survival of the population.

Section 2
Liquid Fuels Assessment

2.1 EMERGENCY-TERM REQUIREMENTS

Armenia is totally dependent on imported liquid fuels. At present, however, the liquid fuel supply is significantly lower than not only the demand but also the supplies called for by intergovernmental agreements. As a result, there is minimal stock buildup of fuels in the country. For a period of 23 days last winter, the country was shut off from any imported fuels and an emergency condition resulted.

The main reasons for Armenia's acute reduction in supplies are:

- Railways and gas pipeline blockade (higher demand, reduced supply)
- Economic crisis
- Fuel price escalation

Fuel supply is not expected to improve in the near future; therefore, it is essential that the Government of Armenia (GoA) store liquid fuels sufficient to meet consumption needs during the severe winter period and in the event of emergency conditions. Emergency conditions will be determined by the GoA where the potential for severe loss of life exists.

The key fuels necessary to maintain essential services and the survival of the population are:

- Diesel for transportation, agriculture and food industries
- Kerosene for domestic heating and cooking
- Mazout for power generation, district heating, and industrial needs

In general, the description of periods of fuel usage in this report will involve the terms "critical" and "restricted." The term "restricted" will denote the time period where the use of fuels and power production is restricted by the intergovernmental agency, SHTAB. This intergovernmental agency is responsible for control of the distribution of all national energy resources to government, industry, and the population during periods of shortage. During the most extreme portion of the winter, SHTAB may require curtailment of power generation and industrial fuel usage. This period is assumed to last for 100 days during the winter season for estimating purposes in this report.

The term "critical" is used when this period of shortage is further degraded to a condition where the survival of a segment of the population is in question. Estimates for this period are based on 30 days in winter.

2.1.1 Diesel

Critical Diesel Use

Based on the fuel shortage experienced during the 1992/1993 winter, it is assumed that a life-threatening critical condition would not last longer than 30 days. The actual critical period will be determined by the GoA. The annual amount of diesel fuel required for critical purposes is presented in Table 2-1, based on information from the Ministry of Transportation and Agriculture.

Table 2-1
Annual Diesel Fuel for Critical Conditions

Use	Diesel (tpy)	Diesel (t/30 days)
Transportation	51,000	4,190
Harvesting (Summer)	55,900	-
Animal Farming	30,000	2,466
Food Production	75,000	6,164
Total	211,900	12,820

Based on this information and ETIP's evaluation, it is recommended that 13,000 tons of diesel for critical purposes be purchased from Russian refineries, shipped to Batumi, and transported by rail to Yerevan. Other possible methods of providing this quantity of fuel may become available as present conditions and commitments change.

To put this quantity of fuel into perspective, at 51 tons per railroad car, the total purchase of 13,000 tons would require 255 cars - approximately nine trains from Batumi to Yerevan. According to the Department of Railroads, this is a feasible proposition. The estimated cost for this purchase is presented in Table 2-2, based on information obtained from the Ministry of Energy and Fuels and the most recent freight bills from the Department of Railroads.

15

Table 2-2
Estimated Cost of Purchasing and Transporting 13,000 Tons of Diesel Fuel

Item	R (billion)	U.S.$ (million)*
Diesel: 13,000 tons @ R 104,000/ton	1.352	1.352
Transportation: 13,000 tons @ R 5,000/ton**	0.065	0.065
Total	1.417	1.417

* Unless indicated otherwise, the exchange rate used for all cost information in this report is R 1,000 = U.S.$1.

** Excludes loading and unloading fees.

This diesel fuel should be stored in guarded storage tanks dedicated for critical use only.

Restricted Diesel Use

Based on information from the Ministry of Transportation and Agriculture, the current restricted use of diesel fuel for transportation is 76,000 - 90,000 tons per year (tpy). Restricted consumption rates for agriculture were not available. Consensus from discussions with the Ministry officials and ETIP's assessment estimates these rates to be 1.5 times the critical rates, the total restricted use of diesel for agriculture is 290,000 tpy, as shown in Table 2-3.

Table 2-3
Restricted Use of Diesel Fuel

Use	Consumption (tpy)
Transportation	76,000
Harvesting	56,000
Animal Farms	45,000 (estimated)
Food Production	113,000 (estimated)
Total	290,000

The storage capacity for 100 days of restricted consumption would be considered prudent and would amount to 80,000 tons of diesel fuel.

16

2.1.2 Mazout

Mazout is mainly used for power generation. ARMENERGO stores mazout at its power plants, which have a total storage capacity of 358,000 tons, as shown in Table 2-4.

Table 2-4
Mazout Storage at Power Plants

Power Plant	Tons
Hrazdan	210,000
Yerevan	72,000
Kirovakan	40,000
Others	36,000
Total	358,000

Critical Mazout Use

According to ARMENERGO, under emergency, life-threatening conditions, 640 tons of mazout per day would be required for power generation of 2 million kWh/day — in addition to the 11 million kWh/day generated by hydroelectric power plants. Power would be supplied only to vital facilities, including hospitals, bakeries, and other critical food industries, water supply and sewer system pumps (and irrigation systems during summer), transportation systems (railroad, subway, stations, airport), communications (post office, telephone, telegraph), some boiler houses, lighting of public houses, selected street lighting, electric heating for 3 to 4 % of the houses, security, and traffic control. (This list of vital facilities was prepared prior to the breakup of the USSR.)

Therefore, 30 days' supply, or 19,200 tons of mazout should be purchased to establish a dedicated 30-day critical supply. It is recommended that the mazout be purchased prior to colder months in a fashion similar to the purchase of diesel - i.e., from Russian refineries and transported to Armenia via Batumi. With 55 tons/car, a total of 350 rail cars will be needed - equivalent to about eleven 32-car trains. Based on information from the Office of Finance and Economy of the Ministry of Energy and Fuels, and from the Department of Railroads, the cost involved is estimated at R 1.094 billion or U.S.$1.094 million, as shown in Table 2-5.

17

Table 2-5
Cost of Purchasing and Shipping Mazout from Batumi to Armenia

Item	R (billion)	U.S.$ (million)
Mazout: 19,200 tons @ R 52,000/ton	0.998	0.998
Transportation: 19,200 tons @ R 5,000/ton*	0.096	0.096
Total	1.094	1.094

* Excludes loading and unloading fees.

Restricted Mazout Use

During periods of restricted energy use, thermal power plant loads will be reduced to 12 million kWh/day, as shown in Table 2-6. Industrial use of mazout during this period is determined by SHTAB as supplies and raw materials are available. There is no attempt to estimate the restricted use of mazout for industry in this report.

Table 2-6
Restricted Power Plant Loads

Type of Station	kWh/day (million)
Hydroelectric	12
Gas-fired	6
Mazout-fired	6
Total	24

The mazout required for 6 million kWh/day of power is 2,000 tons per day (tpd).

To cover the severe winter season, storage for 100 days of consumption is assumed — i.e., 200,000 tons of mazout. The existing 358,000-ton storage capacity at the power plants is more than adequate to meet this condition. The estimated cost for this quantity of fuel is $11,400,000.

2.1.3 Kerosene

Traditionally, kerosene was not a frequently used household fuel. Household electricity was mainly for lighting; space heating was provided by the district heating system; and most residences received gas for cooking. Kerosene was a specialty fuel consumed in relatively small quantities. Because of the scarcity of electricity and natural gas, people have

18

increasingly been using kerosene for heating and cooking. At present, the supply and distribution of kerosene is controlled by the private sector; last winter kerosene was available at relatively high prices, 300-400 R/liter.

To determine the size of the critical supply for kerosene, the following assumptions have been made:

- Kerosene is primarily needed by apartment dwellers in the larger urban areas, including Yerevan, Gumri and Kirovakan. It is assumed that people in single-story housing in urban areas, as well as people in rural areas, have other options available to them — primarily coal and wood. However, under critical conditions apartment dwellers have no heat and a very limited supply of electricity that cannot be used for heating as the electrical distribution system is not designed to carry the additional load required by electric heaters.

- At present, kerosene is available in the marketplace and most likely will continue to be available in Armenia during a winter emergency. However, prices will undoubtedly reflect conditions of scarcity stemming from difficulties experienced by the private sector in bringing the fuel into Armenia. As a result, prices are expected to be high and a sizable part of the population will not be able to afford to buy kerosene. Specifically, it is assumed that 50% of those who depend on kerosene for survival will not be able to afford it. During the winter of 1992/1993, for example, the average pensioner's income was 4,000 R/month and kerosene was selling at 300-400 R/liter.

- In line with the criteria that establish minimum levels of use, it is assumed that a household will require a minimum of 3 liters per day (lpd) to satisfy basic needs for cooking and heating. Even at this level of consumption, it will only be possible to heat part of an apartment for a limited amount of time.

- Although it is assumed that the emergency event will last 30 days at most, the emergency period is calculated to last slightly longer because of difficulties experienced by householders with no jobs or income. Accordingly, a critical period of 50 days is assumed, or a third of the 150-day winter period.

With the above assumptions, the level of critical supply for kerosene is estimated as follows: The total population in the main urban areas is estimated at 1.5 million people, with about 0.5 million living in single-story/detached houses. Thus, the total number of apartment dwellers in the larger urban areas is estimated at 1 million. Fifty percent of these people, averaging four persons per household, represent the population at risk. It follows that 125,000 apartments will have an acute lack of energy. These are the apartments that will need to be supplied with the critical supply of kerosene and will need to have access to an

19

affordable stove to burn it. Thus, the total amount of kerosene to be established as a dedicated emergency supply can be calculated as 3 x 50 x 125,000 liters or 18,750,000 liters = 15,500 tons.

Since the GoA is presently not involved in the supply and distribution of kerosene, the Ministry of Energy and Fuels is unable to provide information on the cost of purchasing kerosene. As a substitute for using this source, the following procedure was used to estimate the cost associated with purchasing kerosene. Based on a comparison of the price for gasoline purchased by the GoA and the price for gasoline charged by the private sector, it was found that the latter was on average twice the GoA price. This private sector markup varied over time, with considerably higher gasoline prices occurring during the winter. Using the same markup percentage for kerosene with a current market price of about R 285/liter, it is assumed that the GoA should be able to buy kerosene in the summer for R 140/liter, including transport cost. Based on this assumption, the total estimated cost for the emergency supply of kerosene and 125,000 stoves is R 3.188 billion or U.S.$3.188 million, as shown in Table 2-7.

Table 2-7
Estimated Cost of Emergency Kerosene Supply

Amount of Kerosene and Stoves	R (billion)	U.S.$ (million)
Kerosene: 18.8 MM liters @ R 140/liter	2.625	2.625
Stoves: 125,000 @ R 4,500/Stove	0.563	0.563
Total	3.188	3.188

20

2.2 NEAR-TERM REQUIREMENTS

2.2.1 General

At present, most of Armenia's liquid fuels are imported from Russia through Georgia, then stored and used by the various sectors, as indicated in Table 2-8.

Table 2-8
Liquid Fuel Use by Sector

Sector	Mazout	Diesel	Gasoline	Kerosene	Jet Fuel	LPG
Power/Heat	x					
Industry	x					x
Transportation		x	x		x	x
Construction		x				
Agriculture		x	x			
Household		x	x	x		x
Commercial		x	x			x

ARMOIL is the state company primarily responsible for the import, transportation, storage, and distribution of liquid fuels. ARMGAS is the state company responsible for the import of gas, construction and maintenance of gas pipelines, LPG and LNG storage facilities (including salt caverns), and distribution of gas (including bottled LPG).

2.2.2 Fuel Consumption by Major Sector

Private Sector — Fuel Distribution

In the past, the import, transportation, and distribution of all liquid fuels were controlled by the government. The government-operated gas stations and other distribution facilities had their own transport mechanisms to distribute fuels throughout the country. Currently the import, transport, and distribution of gasoline, diesel, and kerosene for private sector use are run by the private sector. Diesel and gasoline are primarily imported by truck from Georgia or Iran. Private entrepreneurs often rent storage capacity from ARMOIL and pay for it with cash. As a result, the government has little information on private sector use of gasoline, diesel, or kerosene. The GoA distributes these fuels only to state organizations in the agricultural and transportation sectors, other government institutions, and some officials. The private sector can no longer buy fuel from the government.

21

Fuel Consumption by Agriculture

The Ministry for Agriculture has developed a detailed plan on how much diesel will be needed during the 1993 growing season. Fuel consumption is concentrated in the period from the end of March to the end of November. The plan is based on a region-by-region evaluation of fuel requirements associated with plowing, seeding and harvesting acres that will produce wheat, potatoes, watermelon, vegetables, natural grass (hay), fruits, grapes, and some other products such as tobacco. In addition, the Ministry has evaluated fuel requirements for animal farms and related operations. The total fuel requirements are as follows:

55,893 tons of diesel for plowing, seeding, and harvesting

30,000 tons of diesel for livestock and related work

Total: 85,893 tons of diesel

To complete the work in the field, farmers need 22,170 tons of diesel. At present, 5,000 tons of diesel have been reserved, and the GoA has approved the above requirements for the 1993 season. There are no plans for reducing the level of these requirements because 85,893 tons of diesel is the minimum amount required by farmers to do their work.

Under normal circumstances, the agricultural sector has the following additional energy requirements:

- 30,000 tons of gasoline
- 5.5 million kWh/day for irrigation pumps
- 15 million kWh/day for greenhouses, animal farms, chicken farms, and the like

There is no present plan to meet these additional energy requirements. During emergency conditions there is a total supply of only 0.6 million kWh/day to run equipment. Priority is given to repair shops for agricultural machines, water supply pumps, pump station repair, removal of animal waste in animal farms, and other pressing needs. Some organizations get no power at all, while others get power only 2 to 3 hours per day.

Fuel Consumption by Industry

In the past, the annual consumption of liquid fuels for industry (excluding lubricants) was 400,000 to 450,000 tpy. Use of electricity by industry amounted to 27 million kWh/day out

22

of a total consumption of about 45 million kWh/day. At present, industrial use of electricity is about 15 to 16 million kWh/day. As with all fuel use, SHTAB retains ultimate control of fuel allocation. The quantity available to industry is determined on a case-by-case basis. Those industries that generate foreign exchange and possess raw materials receive preference.

Fuel Consumption by Transportation

Liquid fuels in public transportation are used as follows: Gasoline for trucks, buses, taxis, and official cars; diesel for trucks and buses; LPG for taxis; and CNG for some trucks and some buses. Recent and current quantities of these fuels required for public transport are listed in Table 2-9.

Table 2-9
Liquid Fuel Consumption by Public Transport

Fuel	Normal 1988/1989	Received in 1992	1993 Requirements for Normal Operations
Gasoline (1,000 t)	150-170	13.611	74
Diesel (1,000 t)	85-90	51.0	76
LPG (1,000 t)	17-18	1.0	13
CNG (million m^3)	5-6	5.0	4

It is noted that in 1992 liquid fuels were used only for the transport of wheat, flour, bread, fuel, and passengers. Virtually nothing else was transported. As such, 1992 liquid fuel consumption was historically low.

Under critical conditions, the highest priority is given to bread trucks, then to passenger transport, followed by the transport of commodities such as wheat and seeds. As in other sectors, SHTAB has overall control of allocation of fuels. However, SHTAB does not generally become involved with these basic priorities.

2.2.3 Liquid Fuels Import Agreements

Several agreements exist between Armenia and various suppliers to import liquid fuels (mazout, gasoline, diesel, jet fuel, and LPG).

A preliminary agreement was signed on January 1, 1993, between Armenia and Russia to import the following products during 1993:

- Gasoline: 128,000 tons
- Diesel: 150,000 tons
- Mazout: 460,000 tons
- Jet fuel: 10,000 tons

This is a barter agreement that took 3 months to complete (from early January until late March 1993). Deliveries began in April 1993 and will last through December 1993. In terms of procedure, ARMOIL "pays" the Ministry of Material Resources (MMR), which subsequently buys the fuel from Russia and arranges for delivery of bartered goods in exchange. The quantities of products to be supplied from Russian refineries are shown in Table 2-10.

Table 2-10
Liquid Fuel Supplied by Russian Refineries

Fuel	Volgograd (1,000 tons)	Samara (1,000 tons)	Saratov (1,000 tons)	Grosni (1,000 tons)	Total (1,000 tons)
Gasoline	43	45	40		128
Diesel	75		75		150
Mazout			160	300	460
Jet Fuel	10				10

An agreement was signed between Armenia and Russia under which Russia will ship 800,000 tons of crude oil to the Batumi refinery in Georgia. The crude is refined at Batumi and products are shipped by rail from Batumi to Armenia. The GoA must pay Russia through barter for the 800,000 tons of crude. Armenia has resold 30% of the crude to Georgia as partial payment for the processing of their crude by the Batumi refinery. The Batumi refinery has a 3-million-ton annual capacity and a utilization factor of approximately 10%. So far, the Russians have shipped 100,000 tons of crude oil to Batumi under this agreement. The 65,000 tons destined for Armenia have been refined with the following yield:

- Gasoline: 14% or approximately 9,100 tons
- Diesel: 24% or approximately 15,600 tons
- Mazout: 40% or approximately 26,000 tons
- Jet Fuel: 0.6% or approximately 390 tons

24

- Bottoms: 9% or approximately 5,850 tons (unusable)
- Losses 13.4%

Delivery of the above products began on February 10, 1993. The following quantities have arrived in Armenia:

- Gasoline: 8,944 tons
- Diesel: 15,740 tons
- Mazout: 26,000 tons
- Jet Fuel: 350 tons
- LPG: 0 (411 tons should have been received)

2.2.4 Alternative Schemes for Liquid Fuel Transportation, Exclusive of Mazout

In addition to bringing liquid fuels by rail through Georgia, an alternative scheme has been evaluated by the GoA to supply the southern region of Armenia. This involves transport from Volgograd (by rail in winter and by ship along the Volga river during summer) to Makhachkala on the Caspian Sea, and then by ship to Enzeli in Iran. From Enzeli, the fuel is trucked to Meghri in southern Armenia. A shipment of 20,000 tons of diesel fuel via this route was planned with the first delivery of 2,500 tons expected in 1993. The success of this effort was not available to the ETIP team.

Because northern Iran is also short of diesel fuel, it is expected that Iran may use the incoming diesel in Enzeli, and provide Armenia with diesel trucked from Tabriz to Meghri. Trucking liquid fuels from Tabriz to Meghri is a viable alternative. Using the existing rail line from Tabriz to the Armenian border is not a viable option because it would involve the transfer of fuels from railroad tank cars to trucks for which there are no facilities at the border.

Additional alternatives involve rail transport of fuel via Turkey to Gumri. However, this route is currently closed due to political conflicts. Another option involves a modification of the transport route through Georgia. Although ARMOIL does not think that the capacity of the Batumi-Yerevan line can be increased, the fuel could be unloaded and stored at Akhaltsikh, an area in Georgia where Armenians comprise 30% of the population, and then trucked to Armenia. This would eliminate having to travel through areas in Georgia populated by Azerbaijanis — the Marneuli region. This option has not been used because of the Armenian concern for the possibility that people living in the area might seize the fuel.

Finally, the issue of airlifting fuel was evaluated. At present, jet fuel and gasoline are brought in by air. The gasoline is shipped by rail from different areas of Russia to Sochi on

25

the Black Sea, then loaded into the Llyshin 76 for a short (half hour) flight to Yerevan. Since December 1992, some 5,000 tons of gasoline have been brought in this way. The transport capacity of one plane is 28 tons, or 35,000 liters. The transport cost was R 120/liter in December. At present, this cost is R 200/liter.

The idea of a liquid fuel pipeline from Batumi to Armenia is unrealistic. Cost and security are the predominant drawbacks. The pipeline, shown on the map between Batumi and Tbilisi, through Georgia, is part of a crude pipeline from Baku to Batumi and cannot be used as a liquid fuel pipeline (see Figure 3-1). A liquid fuel line from Iran to Armenia is realistic, but it would not provide an immediate solution to current problems.

2.2.5 Transportation of Mazout

In general, mazout requires rail transport. It cannot be imported from Iran due to differences in rail size. At present, the only way to import mazout is by rail through Georgia. If the rail line through Turkey were open, it could be transported to Gumri.

2.2.6 Transportation Cost

Fuel transportation costs from Batumi to Armenia, obtained from the Republic of Georgia Railroad Authority in July, 1993, were as follows:

- Crude oil: R 7,400/ton
- Kerosene: R 8,000/ton
- Gasoline: R 8,680/ton
- Diesel: R 7,530/ton
- Mazout: R 6,830/ton

These rates were exclusive of loading and unloading, and increased after April 1, 1993, when Russia increased its prices and all other sources followed suit. The cost of air freight for transportation of liquid fuels, excluding mazout, from Russia to Yerevan is R 2 to 3 million/60 tons.

2.2.7 Liquid Fuel Prices

Fuel prices charged by Russia as of April 1, 1993 are listed below. Armenia has not yet purchased fuel at these prices, which correspond to product prices of the 800,000 tons of crude to be refined in Batumi.

26

- Mazout: R 52,000/ton
- Diesel: R 104,000/ton
- Gasoline: R 130,000/ton

Table 2-11 lists current market prices that people in Armenia are paying to the private sector for specific fuels. These prices are not controlled by the GoA.

Table 2-11
Current Liquid Fuel Market Prices in Armenia

Fuel	Winter 1992 (R/liter)	Summer 1993 (R/liter)
Diesel	350	180
Gasoline	400-600	210-250
Kerosene	400	250-320
LPG*		

* In June 1993, a shipment of LPG brought in through Azerbaijan was sold for R 350,000/ ton and R 400/kg.

2.3 BATUMI REFINERY

2.3.1 General and Product Description

The Batumi Oil Refinery was built in 1928/1929 by an American company. Designed to process sweet, light crude oil with a sulfur content below 0.6%, its original design capacity was 5.2 million tpy of crude oil. During its lifetime, the plant was somewhat modified, but due to equipment aging and shortage of spare parts for adequate maintenance, the plant maximum capacity was reduced to below 3 million tpy with a daily maximum oil processing rate within 6,000 - 10,000 tpd. The plant normally produces the following products:

- Benzine (regular grade gasoline and 93 octane aviation fuel)
- Jet fuel
- Diesel fuel
- Mazout No. 100 and No. 40
- Bitumen

Data characterizing some of these products is presented in Table 2-12.

Table 2-12
Properties of Batumi Oil Refinery Products

Product	Gravity	Sulfur (%)	Viscosity (CS@50 °C)	Boiling Point (°C)	Yield (%)	Vapor Pressure (mm/Hg)	NaCl (%)
Crude Oil	0.8385	0.500	N/A	58	100	N/A	30
Benzine	0.7200	0.006	N/A	35-180	13.8	4.40	-
Jet Fuel	0.7820	0.015	1.25	150-250	7.1	N/A	-
Diesel Fuel	0.8300	0.200	3.00	180-360	24.2	N/A	-
Mazout No. 100	0.9155	0.600	20.0	320-500	40.3	-	-

Presently, due to the shortage of crude oil, the plant operates at approximately 10% of its annual capacity, mostly processing Russian crude oil for Armenia. The plant can operate at as low as from 8 to 10% of its design annual capacity.

The price of Russian crude oil was R 100,000/ton (U.S.$100/ton vs. $135/ton on world markets, according to June 1993 data).

According to the agreement between Georgia and Armenia, 30% of the crude oil transported to Armenia through the plant facilities is to be sold to Georgia at the same price as the cost

28

to Armenia. The remaining oil can be processed at the refinery for Armenia at the price of R 6,500/ton (approximately $0.9/bbl).

2.3.2 Liquid Fuel Storage and Loading/Unloading Facilities

The Batumi Oil Refinery has significant storage capacity for crude oil and liquid fuels, as follows:

- Jet fuel: 12,000 m^3
- Diesel fuel: 40,000 m^3
- Mazout: 40,000 m^3
- Crude oil: not less than 100,000 m^3

Plant managers stated that although the plant did not normally handle regular kerosene, the tanks used for diesel fuel storage could be cleaned and used to store regular kerosene, provided the sulfur content does not exceed 0.3% and the flash point is not lower than 45°C. The flash point limitation is a safety consideration to reduce the risk of fire due to aged kerosene-handling equipment.

Among the tanks allocated for mazout storage, four 5,000 m^3 tanks were provided with steam heaters. However, plant management refused to commit those tanks to storage of Armenia's mazout on the grounds that it would be difficult to empty and isolate the tanks from normal plant operations for a special mazout shipment. The main problem is that the unloading facilities in the Port and fuel transfer lines between the Port and the refinery tanks are not heated, limiting to six months - April 15 to October 15 - the period when mazout shipments can be received. Ambient temperatures between October 15 and April 15 drop below the mazout freezing point, which is 25°C for Mazout No. 40 and 42°C for Mazout No. 100.

Although located in the Port, the liquid fuel unloading facilities are owned, maintained, and operated by refinery plant personnel.

The unloading rate is determined by a ship's pumping capacity, but in general it is within the range of 700 tons per hour (tph) to 1,030 tph, depending on the product type and ambient temperature. The distance between the Port unloading station and the refinery storage tanks is approximately 1 mile, and the pressure loss through the transfer line is approximately 7 atm at a 900 tph flow rate for crude oil. The rated pressure of the system is 15 atm.

The refinery has separate terminals for loading each product into the railroad tank cars. The loading terminal for mazout/crude oil has 15 nozzles that allow 15 tank cars to be filled simultaneously, while the loading terminal for diesel fuel/regular kerosene has 9 nozzles that

29

allow 9 tank cars to be filled simultaneously. The filling time of a 60 m^3 tank car is approximately 2 hours, resulting in a maximum daily loading capacity for the terminals of:

- Mazout/crude oil: 15 x (24/2hrs) x 60m^3 = 10,800m^3 (180 cars)
- Diesel fuel/regular kerosene: 9 x (24/2hrs) x 60m^3 = 6,480m^3 (108 cars)

The distance between the plant's storage tanks and liquid fuel loading terminals is between 50 and 100 meters. The loading nozzles and the tank cars are provided with heaters that allow use of these facilities for loading and unloading operations as well as for the transportation of mazout during the winter if the hot product from the refinery is used before cooling occurs. This provides a way to supply Armenia with mazout in the winter. Alternatively, crude oil, which is easily unloaded from the ships in cold weather, can be brought to Batumi and processed at the refinery throughout the winter. Immediately following production, mazout usually has a temperature of about 90°C. The plant processes a minimum of 8,000 - 10,000 tpd of crude oil to ensure that the continuous flow of hot mazout maintains a high enough temperature in the storage tanks to allow its transfer into the railroad tank cars. As stated previously, the sulfur content of crude oil must not exceed 0.6%.

2.3.3 Tariffs

Tariffs for unloading, storing, and loading crude oil or its products into the railroad tank cars is either:

a) Flat U.S.$12/ton (U.S.$1.6/bbl)
or b) U.S.$8/ton + X% of the product quantity

where

$$X\% = \frac{12-8}{A} \times 100$$

A = the world price for the product in U.S.$.

That is, the second (b) type of tariff is a combination of money and product.

30

Table 2-13 shows the cost of unloading representative samples of liquid fuels for Armenia in the Port of Batumi at $12/ton.

Table 2-13
Cost of Unloading Liquid Fuel in the Port of Batumi*

Fuel	Quantity (tons)	Cost (U.S.$)
Kerosene	15,000	180,000
Diesel Fuel	30,000	360,000
Mazout	20,000	240,000
Sub Total	65,000	780,000
Port Charge		130,000
Total		910,000

* Port of Batumi authorities charge a U.S.$1.5 - $2/ton fee for liquid cargo since the fuel unloading facilities and transfer lines on land belong to the Port.

2.3.4 Conclusions

- The Batumi refinery has sufficient capacity to process 6,000 -10,000 tpd of crude oil and can be used to produce mazout to meet Armenia's needs during the winter (a yield of approximately 40%). The plant can also be used to produce diesel fuel from crude oil (a yield of approximately 25%). The Batumi refinery option is expected to be less expensive than the option of bringing those products from outside since the processing cost is only R 6,500/ton (approximately $0.9/bbl). Other products from the same shipment of crude oil can be sold on local markets or bartered for regular kerosene.

  To satisfy Armenia's critical need for 30,000 tons of diesel fuel, taking into consideration that Georgia will withhold (and pay for) 30% of the product for its own use, the required amount of crude oil is:

  $$\frac{30{,}000 \text{ tons}}{0.25 * (1 - 0.3)} = 171{,}430 \text{ tons}$$

  This amount should be brought to Batumi in several increments so that the system is not overloaded.

31

- Regular kerosene cannot be produced at the refinery and must be brought from the outside. The refinery does not have a separate storage area for kerosene, but part of the diesel fuel storage capacity can be allocated for kerosene, if properly cleaned. Refinery personnel must be given advance notice of the upcoming shipment so that they have enough time for preparations. Also, the shipments must be properly scheduled with respect to plant storage and railroad capacities.

  Caution: The flash point of the kerosene must not be lower than 45 °C; sulfur content must not exceed 0.3%

- Liquid fuel is normally unloaded from the tankers at the unloading facilities belonging to the refinery plant to the plant's storage tanks, and from there into the railroad tank cars. The unloading facility capacity is within 700 tph (for mazout) and 1,030 tph (for crude oil) range. It allows simultaneous unloading of crude oil (or mazout) and diesel fuel (or kerosene).

- Mazout cannot be unloaded from the tankers from October 15 to April 15 because the transfer pipelines are not heated.

2.4 LIQUID FUEL STORAGE

2.4.1 Existing Storage Capacity

ARMOIL considers their storage capacity to be adequate under present fuel use conditions. In its view, the order of priorities are, first, transportation, followed by the ability to pay for the fuel, and, last, storage. ARMOIL has a sound plan for increasing their storage capacity, but considers implementation of the plan a low priority, given the current lack of funds and unused storage capacity. Therefore, it has halted construction of the new facilities in Yergvard, which are 70% complete.

ARMOIL has no plans to set aside fuel for the winter. Whatever comes in is used almost immediately.

Liquid fuels are stored by:

- ARMOIL
- ARMENERGO
- Individual industries
- Community/municipal systems (at boiler houses)
- Airport authorities (total capacity: 15,000 tons of jet fuel)

ARMOIL has storage facilities for liquid products and lubricants at 24 locations (18 existing and six under construction). Table 2-14 gives the storage capacity of existing facilities and those under construction by type of liquid fuel.

Table 2-14
ARMOIL's Existing and Future Liquid Fuel Storage Capacities

Fuel	Exist (tons)	Under Construction (tons)	Total (tons)
Gasoline	198,290	6,010	204,300
Diesel	51,590	2,945	54,535
Fuel Oil	8,073	237	8,310
Mazout	25,725	815	26,540
Lubricants	11,222	12,866	24,088
Kerosene	1,373	946	2,319
Jet Fuel			15,000

ARMOIL currently has the capacity to store 196,903 tons of liquid fuel and lubricants. On completion of the new facilities, they will maintain storage for 220,092 tons of these products. ARMOIL also stores kerosene at their tank farms, where they clean the tanks before changing the product to be stored.

ARMENERGO maintains a total storage capacity of 358,500 tons for mazout at its power plants, distributed according to Table 2-4.

Industries have facilities to store mazout at many different locations, with a total capacity of 565,400 tons. Community/municipal systems have a 32,300-ton storage capacity for mazout, resulting in a national total mazout storage capacity of 955,700 tons.

2.4.2 Future Storage Requirements

Motivated by the energy crisis, the GoA intends to implement a policy on fuel storage calling for three different types of storage:

- *Operational storage* is needed to accommodate the difference between quantity, time of delivery, and the rate of fuel consumption. As an example, for the case of natural gas, under normal circumstances 12% of annual consumption would be required for operational storage. The supply comes in at an average flow rate of 10 million m^3/day throughout the year; but in summer, demand typically drops to 5 million m^3/day, while in the winter it peaks at 18-20 million m^3/day.

- *A strategic reserve* is created to maintain a long-term reserve, much like the strategic petroleum reserve in the United States. At present, Armenia does not have this type of reserve, which should be around 10-15% of annual consumption.

- *An emergency reserve* should be maintained to accommodate supply interruptions stemming from unforeseen events such as destruction of the railroad bridge. Statistics indicate that this type of storage should be 5 to 6% of annual consumption.

As a general rule, the government plans to allocate about 25% of annual consumption to be divided among the above types of storage. In the case of natural gas, with a supply under normal circumstances of about 6.5 to 7 billion m^3/year, 1,625 million m^3 should be stored - or seven to eight times the storage capacity at Abovian. In its 1992 report, *Energy, Special Program,* the GoA summarized the 1991 liquid fuel storage situation. The results are shown in Table 2-15.

34

Table 2-15
GoA Summary of 1991 Storage of Fuels*

Fuel	Annual Consumption	Required Storage	Available Storage	Required Storage Available (%)
Natural Gas (M m^3)	6,207	1,474	299	20.3
Mazout (1,000 tons)	2,019	598	982	164.2
Coal (1,000 tons)	296	75	0	0
Gasoline (1,000 tons)	950	226	98	43.5
Diesel (1,000 tons)	510	121	52	42.7
Jet Fuel (1,000 tons)	233	55	15	27.3

* Note that the above available storage for gas also includes storage capacity associated with the uncompleted LNG facility. Including all fuels, the GoA estimates that available storage is about 60% of what is required. Storage capacity of mazout is very unevenly distributed. Although the total storage capacity is almost 50% of total annual consumption, ARMENERGO has about 80% of required storage capacity, while industry and others account for more than 500% of required storage capacity. There is a need to redistribute storage capacity from industry to ARMENERGO.

Section 3
Gaseous Fuels Assessment

3.1 GENERAL

With no gas production of its own, Armenia has been totally dependent on imports from Turkmenistan through pipelines entering via Azerbaijan and Georgia. Throughout the 1980s, gas consumption continued to rise and in 1989 reached a peak of 5.87 Bcm/yr when it provided for 50% of the country's primary energy consumption. About one third of this amount was for power generation; the remainder went to the industrial, commercial, and the residential sectors. Since 1989, the conflict with Azerbaijan has resulted in a cessation of the supply from Azerbaijan and in interruptions and severe constraints of the supply from Georgia.

The natural gas pipeline system that delivers gas to Georgia and Armenia travels from Turkmenistan through Kazakhstan to Mozdok in Russia, and continues southward to Vladicaucas in Ingoushetia. From there, it crosses the Caucasus Mountains to Kvesheti, Saguramo, Airoum, and, finally, Abovian.

Figure 3-1 shows the route of the natural gas transmission pipeline from Georgia to Airoum. This fuel can be made available to most of Armenia through an extensive transmission and distribution system, as shown in Figure 3-2.

Natural gas is of particular importance for power; it is used to generate both power and heat in the Hrazdan, Yerevan, and Kirovakan power stations, which have a combined capacity of 1,756 MW, or 50% of Armenia's total installed generating capacity. The plants are dual fired with natural gas and mazout, and in 1989 consumed 2.11 Bcm of natural gas (35% of total consumption). After closure of the nuclear plant in 1989, dependence on natural gas and mazout for power generation increased, but consumption declined to 1 Bcm in 1991 due to the energy blockade.

Natural gas consumption by household and official and municipal consumers accounted for 2.1 Bcm/yr in 1989, declining to 1.7 Bcm/yr in 1991. Interruptions of the fuel supply became critical in the 1992/1993 winter. Figure 3-3 shows that in 1992 and during the first few months of 1993, the natural gas supply was significantly less than the demand as well as the agreed-upon supplies in intergovernmental agreements. (In 1992, the agreement amount was 5.2 Bcm/yr; the supplied amount was 1.75 Bcm/yr.)

The economic crisis in Armenia — the price escalation for energy resources and decrease in Armenia's solvency — caused a reduction of planned natural gas supply for 1993 to 3.6 Bcm. However, even this reduced quantity cannot be delivered because of supply problems as well as Armenia's lack of funding.

36

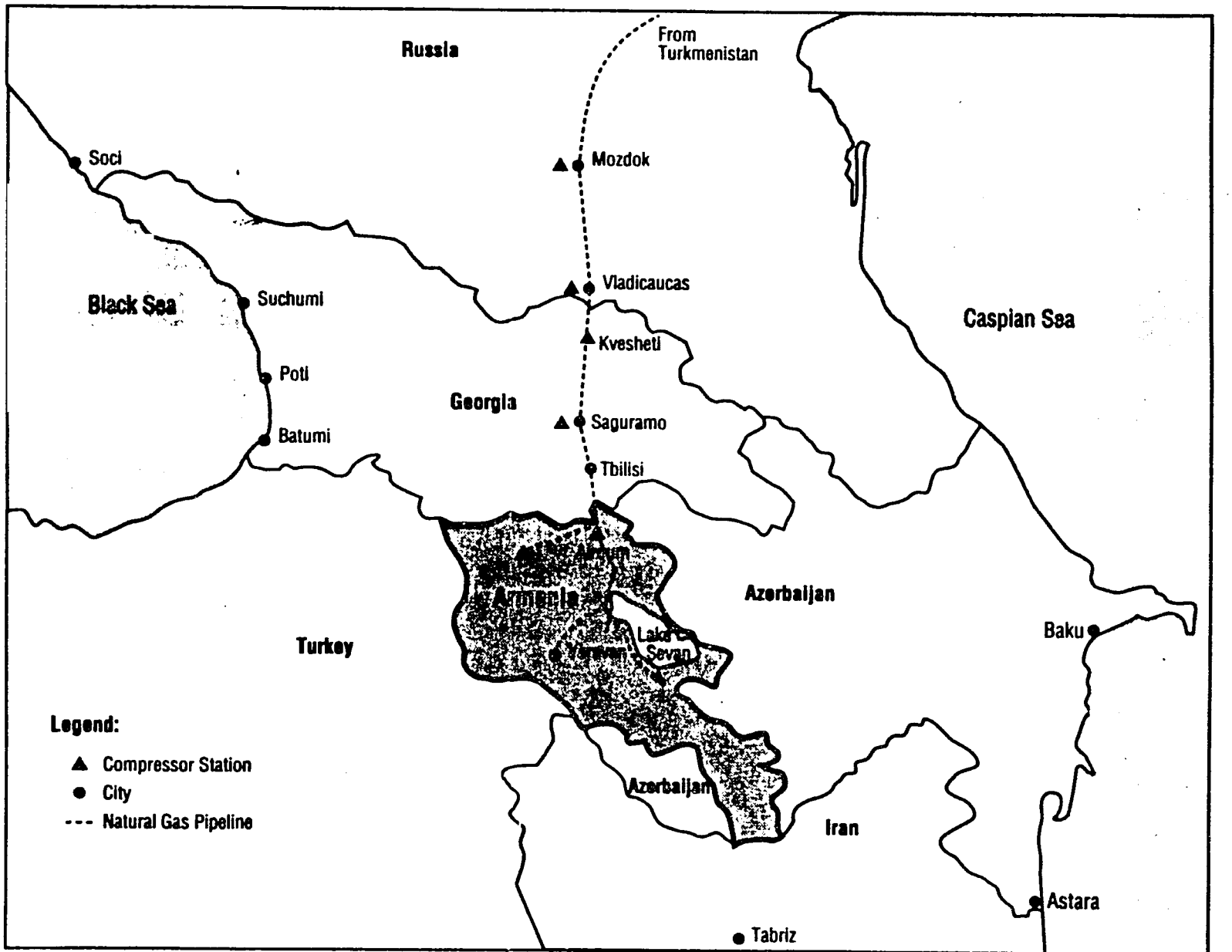

83-3212b 012 9-16-83 zr/ag:7

Figure 3-1 Natural Gas Transmission Pipeline

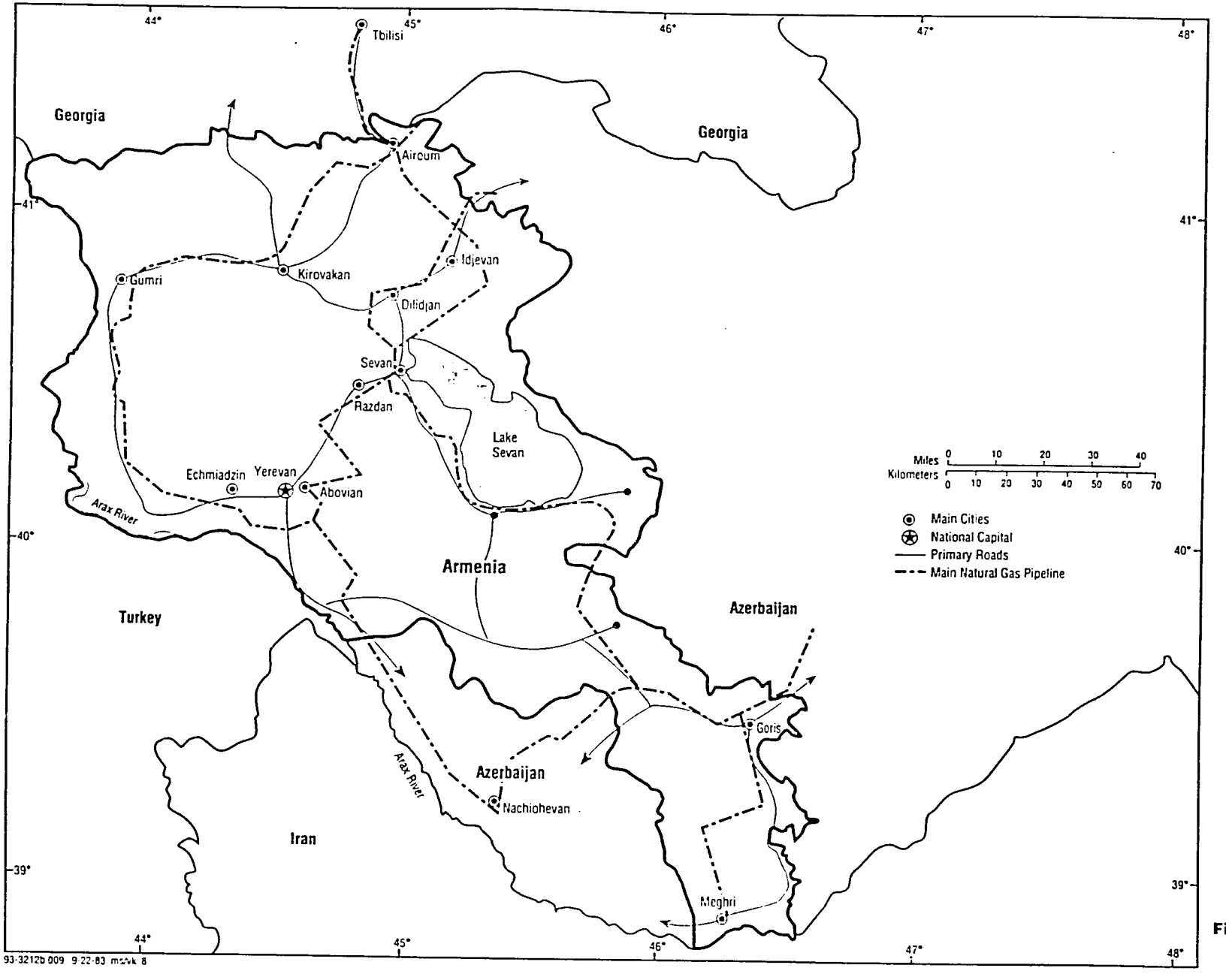

Figure 3-2 Gas Distribution System in Armenia

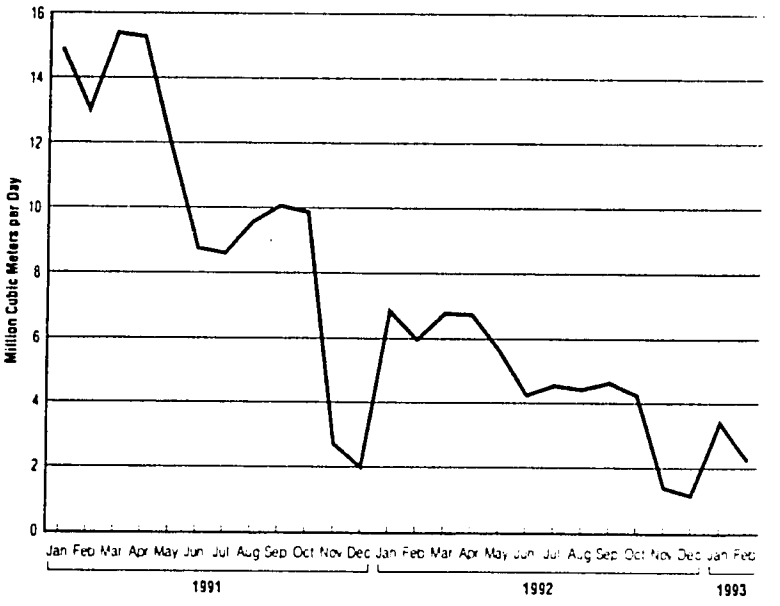

Figure 3-3 Average Daily Consumption of Natural Gas in Armenia

In 1987, the USSR Central Planning Committee initiated a master plan to increase the throughput of the pipeline system from Mozdok to Armenia and to extend the line to Iran. The system design capacity was approximately 60 million m^3/day. To achieve this objective, it was planned to add a second parallel line and to install compressor stations at several points along the line — at Vladicaucas, Kvesheti, Saguramo, and Airoum. Some parts of the system have been constructed, some are under construction, and others have not yet begun construction. Two pipeline segments were completed in August 1993. A 24-km segment on the discharge side of Kvesheti underwent hydrostatic testing in late June 1993. The second 84-km segment between Saguramo and Airoum was in place awaiting block-valves. Figure 3-4 schematically shows the system configuration with planned and completed compressor stations and pipelines. Currently, only the Mozdok and Kvesheti compressor stations are operable.

Completion of the additional pipeline segments at Kvesheti and between Saguramo and Airoum will substantially increase the throughput capability to handle both Georgia's and Armenia's gas needs — approximately 20 million m^3 for Georgia and 10 million m^3 for Armenia. This can only be achieved with an operating compressor station at Mozdok.

Currently, due to the energy shortage, many of the branch pipeline connections in Georgia are isolated, so that the major industrial complex and population center of Tbilisi may be served. The main pipeline originally designed to serve Armenia through Azerbaijan is also valved off, and a new substitute line has been built to connect to the Armenian grid. As in

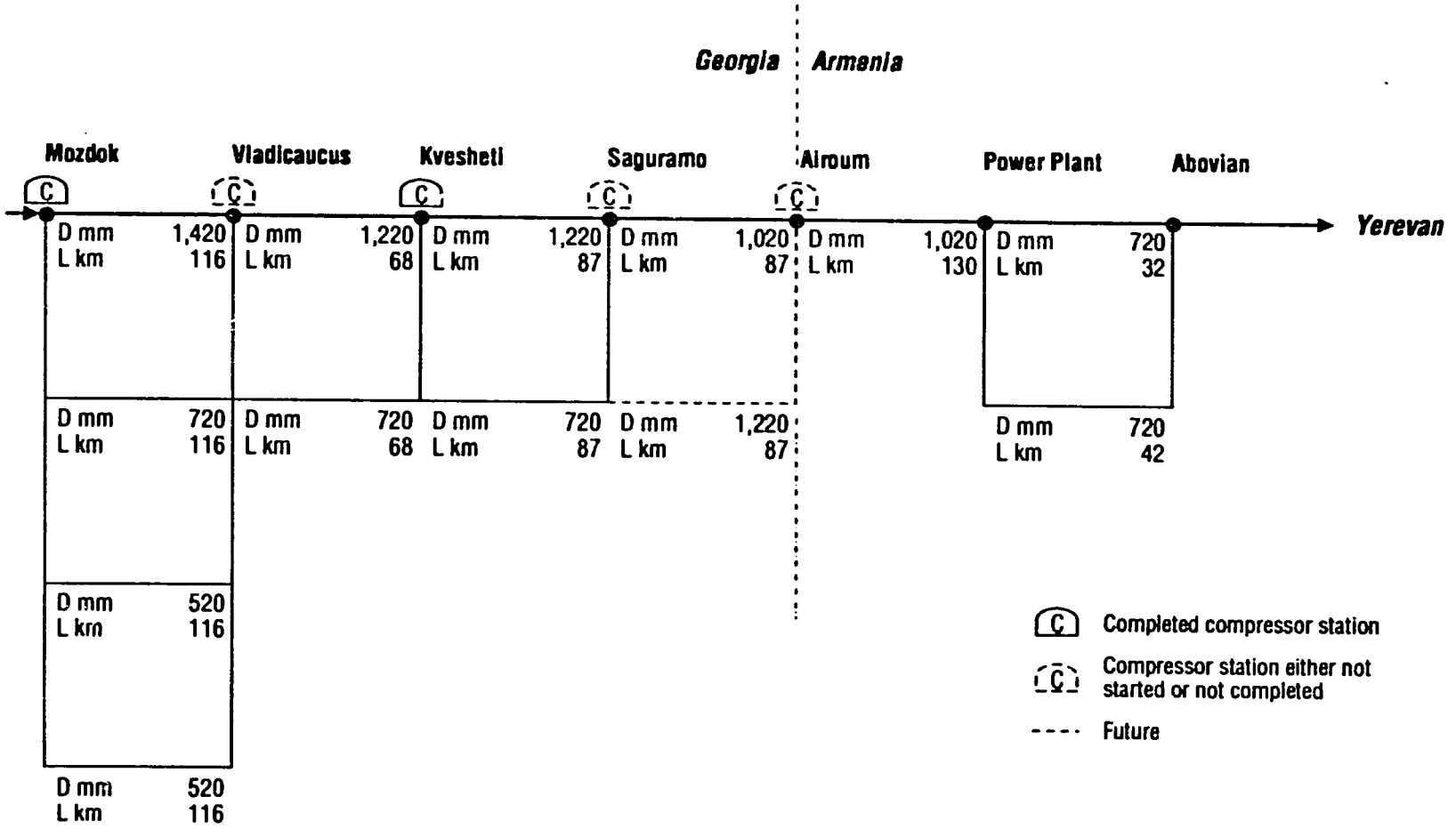

This sketch shows pipeline and compressor stations that were to be constructed according to the 1987 Central Committee Plan of the former USSR.

Figure 3-4 Gas Pipeline System from Mozdok to Abovian*

93-3212b 014
9-15-93 tg/tg 2

Georgia, many of the branch pipeline connections in Armenia are isolated in order to assure service to residential and industrial sectors in Yerevan.

The present supply of natural gas is approximately 100,000 m^3/hr, or 2.4 million m^3/day. Presently, operable pipelines and gas compressors are capable of delivering more gas than is currently contracted for by both Georgia and Armenia: 10 million m^3/day for Georgia and 5 million m^3/day for Armenia.

3.2 EMERGENCY-TERM REQUIREMENTS

The emergency conditions are defined as the curtailment of all natural gas supplies. Therefore, there is no "emergency" supply of natural gas. In the short term, several interrelated factors account for the mentioned level of natural gas imports:

- The GoA has established increasingly lower levels (annual quota) for the planned imports, primarily due to the lack of funds. The general purchase agreements with Turkmenistan, the supplier of natural gas, was for 5.2 billion m^3 in 1992, and was set at 3.6 billion m^3 for 1993.

- Actual deliveries, made possible through barter arrangements, have been consistently lower than those stipulated by the purchase agreement. In 1992, 1.827 billion m^3 of gas were delivered, and in the first two months of 1993 the deliveries were 104.7 and 60.2 million m^3, respectively. Summer deliveries in 1993 were approximately 2.4 million m^3/day.

- The price of gas from Turkmenistan has risen rapidly and may approach world market prices in the not too distant future.

- Armenia is at the end of a rather complex gas supply route with Georgia being first in taking deliveries. Gas destined for Armenia invariably arrives at the Armenian border in reduced quantities. There is, however, no physical limitation on supplying the required flow rates to Armenia.

According to GoA estimates, the nation requires a minimum electrical energy supply of 24 million kWh/day during winter. Hydropower plants generate 12 million kWh/day. The remaining 12 million kWh/day is planned to be generated at thermal power plants: 6 million kWh/day on mazout and 6 million kWh/day on natural gas.

When the production of electrical energy and heat is combined, natural gas consumption by thermal power plants is 2.4 million m^3/day. During the 100-day portion of winter season, fuel requirements would be 2.4 million m^3/day x 100 days = 240 million m^3/day. This level of fuel supply would allow the minimum of industrial production required to generate foreign exchange and barter goods.

Present import levels are at a critical low level. Although natural gas is allocated and distributed daily to the most needy enterprises, including the power sector, households and other industries are suffering severe shortages. Continuation of this situation throughout the summer and into the winter will create conditions similar to those of the 1992/1993 winter when households had no gas and industries were forced to shut down.

The longer essential industries are without gas, the more difficult it will become for the GoA to manufacture products that can be bartered to keep the economy afloat. Therefore, an additional quantity of gas should be purchased and paid for to guarantee the industrial output that will reverse the decline in output.

As soon as additional gas can be delivered to Armenia, a course of action could be to fill the natural gas storage caverns in Abovian, which can hold 210 million m^3. While these storage caverns are normally used for operational purposes, under present conditions they could be filled to create an emergency gas supply for the winter. For the last two years, the caverns were not utilized because of lack of supplies. To fill the caverns, a minimum natural gas suction pressure of 8 atm for the storage facility compressors must be achieved. Without additional gas supplies over and above the current 2.4 million m^3/day, it is doubtful that the storage caverns can be filled and a dedicated emergency gas supply created.

To determine the minimum level of additional gas to be purchased to fill the existing storage caverns, the following assumptions have been made:

- September 15 is the start date of additional natural gas deliveries
- November 20 is the winter start date
- The time available until the start of the next winter is 15+30+20= 65 days
- The daily minimum level of additional natural gas deliveries is 210 million m^3 ÷ 65 = 3.23 million m^3/day

A target level of 5.7 million m^3/day (2.4 + 3.3) is about 38% of the normal summer level of use, significantly below the daily equivalent of the 1993 planned quota of 9.9 million m^3/day (3.6 Bcm/year ÷ 365 days).

An engineering assessment of the operating natural gas pipeline configuration indicates that with the present facilities, flow could exceed 9.9 million m^3/day (current contractual flow rate). Providing that the minimum suction pressure of 8 atm is available at Abovian, the required gas volume can be stored in the caverns.

Near-term remedial needs for the natural gas delivery system that will enhance the critical deliveries now being received comprise pipeline equipment and supplies. Since the present configuration is capable of delivering whatever gas is available, all that is needed is to assure continuity of service. Two types of emergencies have been identified: terrorist or man-made, and natural disasters such as landslides in the rugged mountainous terrain or earthquakes. Both of these emergency situations have been occurring with disturbing frequency.

3.3 LONG-TERM REQUIREMENTS

Armenia is faced with a number of long-term issues and investment decisions that will have a major impact on the restoration and further development of the natural gas subsector. These include the need to:

- Resume gas deliveries via Georgia up to the pipeline design capacity of 20 million m^3/day.

- Diversify gas imports to improve security of supplies. There are several alternative sources of natural gas: Turkmenistan, Russia, and Iran. Armenia may also be able to supplement their needs from indigenous resources because some encouraging moves are being made by the GoA toward development of oil and gas.

- Restructure consumer prices and implement natural gas metering to provide sufficient revenues to pay for gas imports, operations, and maintenance costs; to promote conservation; and to contribute to the financing of network rehabilitation and expansion.

- Pay serious attention to natural gas pipeline dispatching, custody transfer, automation, and communications. A multi-channel microwave system adaptable to all of these functions would resolve present dispatching problems.

- Clean, repair, and replace the transmission and distribution infrastructure that suffered considerable damage in the 1988 earthquake. Inspection of high-pressure natural gas transmission systems, neglected due to more urgent survival questions, is overdue. As gas flow rates and pressures return to near

normal, serious explosions can be avoided by introducing "smart" pigging of older lines to identify defects. This should be done under contract by highly skilled experts.

- Upgrade the pipeline systems, including flow efficiency enhancement and preventive maintenance for piping and compressors. This will increase service reliability and reduce operating costs while increasing gas throughput.

44

Section 4
Solid Fuels Assessment

4.1 COAL

Cost is usually the key to understanding the desirability of mining indigenous coal in Armenia. The mere presence of coal resources may not justify mining. The heating value of coal and the cost of delivering that heating value to homes in cities must also be considered in a framework that includes all sources of heat. Using information collected in Armenia, Table 4-1 shows the relative value of indigenous coal with respect to these other alternatives.

Although the table shows that indigenous coal can probably be produced at costs competitive with buying Georgian coal, the status of the programs to prove the quality, quantity, and suitability of domestic coal to home heating is not adequate to allow development of these deposits before the winter of 1993/94. According to Armenian law, these deposits may not be developed until the results of geologic and technical sampling and testing have been presented to and approved by the Commission on Reserves of Underground Resources of the GoA. Figure 4-1 shows the location of Armenia's coal, peat, and bituminous shale deposits.

According to representatives of the Commission of Reserves of Underground Resources, geologic and technical sampling have been hampered by a lack of diesel fuel, inadequate insufficient drilling equipment, lack of funding for camp facilities, and lack of laboratory facilities in which to perform tests. At present, the only work being performed in this area is a small experimental mining effort at Idjevan, expected to produce 12,000 tons before winter for use in Idjevan, and some prospecting trenching underway at Djadjur.

The Department of Underground Resources indicates that if the required drilling equipment, laboratory equipment, and fuel were available, it would be possible to present data on the feasibility of the Djadjur coal deposit to the commission by March 1994. This would allow sufficient time for development of the mine to produce coal for the winter of 1994/95.

To meet Armenia's long-term needs for coal, the following materials are required:

- Coal testing laboratory equipment adequate to perform 100 analyses per day for proximate analysis (heating value, volatile material, ash, moisture, and sulfur), plus additional equipment to perform technical tests such as coking characteristics, ash fusion, and sink/float.

- A sufficient number of drilling rigs to drill four coal deposits simultaneously. These drilling rigs must have considerable mobility to enable them to move over rough terrain. They must also be capable of drilling to depths from 90 mm to 1,000 meters as well as drilling at an angle - horizontally, if

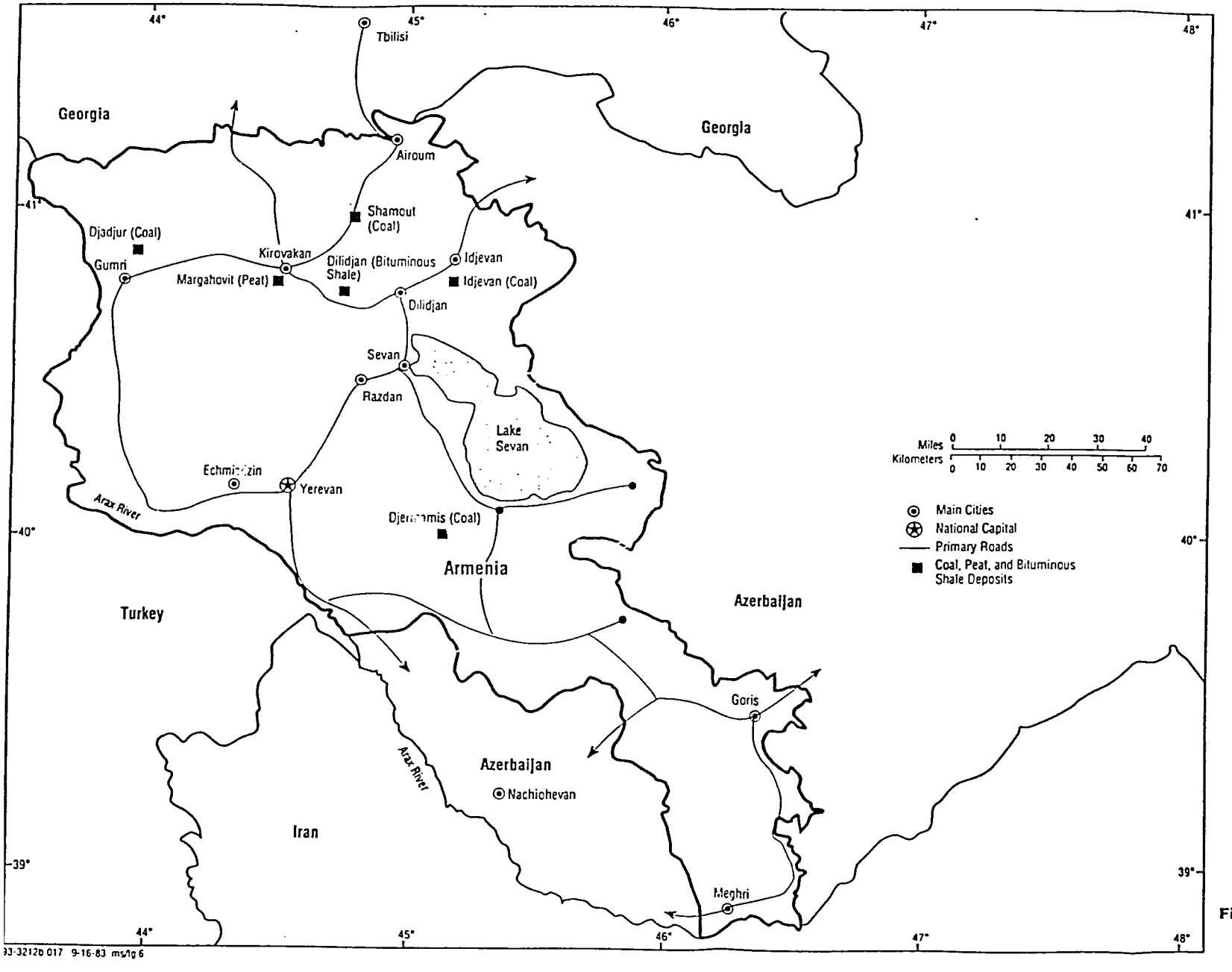

Figure 4-1 Coal, Peat, and Bituminous Shale Deposits in *Armenia*

Table 4-1
Home Heating Fuels - Comparison of Costs For Various Heat Sources [1]

Source of Heat	Heating Value (kcal/kg) [2]	Unit Price [3] (R)	Cost of Heat (R/kcal)	Cost Equiv. to Kerosene	Cost to Heat 125,000 APTS (million U.S.$)[4]
Kerosene [5]	10,300	600/liter	0.075	1.00	42.0
		700/liter	0.087	1.17	649.0
		800/liter	0.100	1.33	756.0
Mazout [6]	6,500	148.5/kg	0.023	0.31	12.78
		49.5/kg	0.008	0.10	4.29
Wood [7]	2,440	10,000/m^3	0.005	0.06	2.56
		20,000/m^3	0.009	0.12	5.13
		30,000/m^3	0.014	0.18	7.69
Georgian Coal [8]	4,000	9,000/ton	0.002	0.03	1.27
		20,000/ton	0.005	0.07	2.82
		30,000/ton	0.008	0.10	4.22
Djadjur Coal [9]	4,000	10,200/ton	0.003	0.03	1.44
		23,300/ton	0.006	0.08	3.28
Idjevan Coal [10]	6,650	26,150/ton	0.004	0.05	2.21
Idjevan Coal and Peat Briquettes [11]	5,000	16,000/ton	0.003	0.04	1.80
		18,800/ton	0.004	0.05	2.12
		23,500/ton	0.005	0.06	2.65

Notes:

1. All costs are based on the best information available from the Ministry of Energy and Fuels. (The conversion rate used in this table is: R 1,100 = U.S.$1.)
2. Heating values are calculated on an "as received basis," which includes moisture.
3. Unit prices include delivery to Yerevan and distribution within the city.
4. Heating of each apartment is assumed to take 2.0 kW per home for 120 days (equivalent to 5 liters of kerosene per day).
5. The expected price of kerosene next winter is R 600/liter. Higher costs are shown for sensitivity analysis.
6. Mazout is a heavy heating oil. It is included here for reference only since it cannot be used in home stoves.
7. The range of wood prices begins with the price in winter 1993, with higher prices shown for sensitivity analysis.
8. The price of Georgian coal starts with the price in winter 1993, with higher prices shown for sensitivity analysis.
9. The lower cost for Djadjur coal assumes best mining conditions and Armenian equipment, and the higher cost assumes poor conditions and U.S. equipment.
10. The cost for Idjevan coal assumes good wall rock conditions and Armenian equipment. Idjevan coal may not be suitable for home heating due to its friable nature.
11. These figures are based on briquetting, using 50% Idjevan coal and 50% Margahovit peat. The range in costs assumes a median estimate minus 15% and plus 25%.

43

possible. The Department of Underground Resources estimates they will require 8 drills; however their calculations are based on a rate of 4 to 5 meters per day, which is low by U.S. standards. A new U.S. drill rig can drill from 50 to 75 meters per day.

- Fuel for the drilling programs. Based on past experience, the Department of Underground Resources estimates the fuel consumption of a drill to be 40 tons per month (~47,000 liters) plus 1 ton of lubricants. They also estimate the gasoline requirement for each coal deposit to be about 10 tons per month (~14,000 liters). Based on past experience using two drills per site for 8 months of the drilling season, the total requirement for each site for one year would be approximately 750,000 liters of diesel fuel and 112,000 liters of benzene. [Should U.S. drilling rigs be used, the amount of fuel required would probably be much lower than this due to the faster drilling rate.]

- Auxiliary field equipment. To support the drilling programs, it will be necessary to have equipment for building and maintaining roads, storing water, and housing personnel. The Department of Underground Resources estimates these requirements to be four housing trailers, one water truck, two storage tanks, one bulldozer, and one car for each coal evaluation site.

- Electric logging equipment. This kind of equipment allows geologists to determine the depth and thickness of coal seams without core drilling. Using these techniques would accelerate the drilling programs since core drilling is much slower than ordinary rotary drilling. Some core drilling is still required to obtain samples for testing, but intermediate holes drilled primarily to define the structure of the coal seams can be made using this less expensive technique. The Department of Underground Resources says that they have people capable of operating this type of equipment; however, they do not have access to such equipment at this time.

- Assistance in coal resource evaluation. Once the drilling is complete, it is still necessary to correlate the information and make the maps and cross sections upon which a mine plan is based. Performing this work by hand is labor intensive and takes a long period of time. Using computer methods, most firms in the U.S. have been able to accelerate these evaluations; however, such computer software is not available in Armenia. The Department of Underground Resources feels that it would be helpful if such analyses could be performed by a U.S. firm.

Satisfaction of the above requirements will accelerate the evaluation of known Armenian coal deposits. It is also possible that Armenia has coal deposits of greater quantity and/or quality

that have not yet been found. If the geology of the deposits in Armenia are similar to those found in surrounding countries (Georgia, Iran, and Turkey), this is almost certain to be true. However, the difficulty in Armenia is that it is covered by volcanic lavas and tufts that hide the resources underneath. Drilling through these volcanics is expensive, especially when done on a prospecting basis. There are devices in the U.S. that have been successfully used to detect the structure of carbonaceous strata such as coal, oil, and gas by sensing the geotelluric fields of the earth. These devices do not require any drilling, but they work best if they can be calibrated to a known occurrence.

A list of the minimum equipment and the estimated costs for coal exploration are presented in Section 9, Table 9-3.

4.1.1 Status of Coal Prospecting in Armenia

The evaluation of all ore and coal deposits Armenia is conducted by the Department of Underground Resources. These solid fuels are listed in Table 4-2, ranked from the lowest to highest heating value.

Table 4-2
Heating Value of Solid Fuels in Armenia

Material	Heating Value
Asphalt	Lowest
Peat	↓
Burning Shale (oil shale)	
Lignite/Brown Coal	
Hard Coal (bituminous coal)	
Anthracite	Highest

All deposits progress through four stages in the evaluation process, which usually takes 5 years. After all four stages have been completed, the resulting data are presented to the Commission on Reserves of Underground Resources for approval of the deposit. If approved by the Commission, the GoA requests one of the design institutes to prepare a mining plan. If the mining plan is acceptable, then the GoA may instruct the Ministry of Energy & Fuel to develop the project. Each of the four evaluation stages and the percentage of time required to complete them are shown in Table 4-3.

Table 4-3
Stages of Evaluation for Solid Fuel Deposits

Stage		% of Total Time
0.	No development	0
1.	Prospecting	10
2.	Prospect Evaluation	20
3.	Preliminary Exploration	30
4.	Detailed Exploration	40

Since the time of Armenia's independence in 1990, the Department of Underground Resources has identified over 50 sites of solid fuels and has selected 15 promising deposits for priority evaluation. Table 4-4 lists these 15 deposits by type of solid fuel and current status with regard to the evaluation stages listed in Table 4-3. The deposits furthest along in the process are mostly those that were evaluated before independence — and the majority of these occurred prior to 1980. In every case, a decision was made not to develop the deposit due to the availability of coal from other sources within the USSR.

4.1.2 Descriptions of Key Coal and Peat Deposits

Following are descriptions of the most promising deposits shown in Figure 4-1.

Dilidjan

This deposit is an occurrence of low-grade oil shale in the resort city of Dilidjan in the north central part of the country. It has a thickness of about 2 meters and a heating value of between 500 and 1700 kcal/kg (Dry Basis). The strata are heavily folded in the vicinity of the outcrop. The material at the outcrop that was inspected is quite weathered and friable; however, it is reported to be much more competent where it was encountered in an audit. The 850-meter-long audit was excavated in a hill in Dilidjan in order to drain the slope for stability purposes after the large earthquake in 1988. The strata underground were not inspected due to the lack of electricity in the audit. This oil shale has been used in combination with peat during briquetting experiments conducted by the Department of Underground Resources. Total estimated reserves are unknown at this time.

46

Table 4-4
Solid Fuel Deposits in Armenia*

Deposit Name	Type of Fuel	Stage
1. Idjevan	Hard Coal (coking coal)	3
2. Djermanis	Hard Coal	3
3. Shamout	Hard Coal	3
4. Djadjur	Brown Coal/Lignite	4
5. Antaramut	Brown Coal	3
6. Sodk	Brown Coal/Lignite	0
7. Yeghegis	Brown Coal/Lignite	0
8. Sisian	Brown Coal/Lignite	0
9. Dilidjan	Burning Shale (oil)	2
10. Aramus	Burning Shale (oil)	1
11. Garni	Asphalt	0
12. Carnout	Asphalt	0
13. Taush	Hard Coal	0
14. Svarants	Hard Coal	0
15. Aravik	Brown Coal/Lignite	2

* Occurrences of peat are not included in this table.

Idjevan

This hard coal, reported to be suitable for coking, occurs in a deposit near the city of Idjevan in the northeast corner of Armenia. The deposit occurs as a coal and parting sequence about 17 meters thick, dipping to 45 to 65°. The outcrop of the coal roughly parallels a steep mountain ridge and dips into the hill. The lower 8 meters of the sequence contain the least amount of parting material; the upper portion contains the most. Within a short distance horizontally from the outcrop, the strata are cut by an even steeper fault that strikes within 20° of the coal, limiting the amount of coal below the fault.

The coal deposit has an eastern flank and a western flank. The eastern flank is about 600 meters long and is the site of an experimental open cast mine where samples are being taken

and a large face of coal is exposed. The coal reserves in the eastern flank are estimated to be about 500,000 tons. The oxidized zone is expected to be from 8 to 10 meters from the surface; however, determining this depth is one purpose of the experimental mine. The heating value of the coal is said to be 7,000 to 8,000 kcal/kg (dry basis) with an ash content of about 30%. If the argillite partings are included, the ash content increases to about 42%. The western flank extends for about 2,000 meters and is estimated to contain about 12 million tons of coal.

Since the Idjevan deposit occurs in a forested area, it is desirable to limit the mining impact on the surface. The deposit is very close to the railroad, allowing easy transport of the coal. Underground mining methods will require a beneficiation plant to remove the argillite partings.

Margahovit

This is a series of peat deposits occurring in a farming area in the north central part of Armenia. The thickness of the peat is 1.5 to 2.0 meters with a heating value of about 3,000 kcal/kg (dry basis). The potential reserves from three areas, comprising about 2 hectares each, are estimated to be about 200,000 tons. The use of this peat is seen as a binding material in briquettes made from a mixture of 50% coal and 50% peat. Experiments with Idjevan coal have produced briquettes with a heating value of about 5,000 kcal/kg. In this procedure, only pressure is used to make the briquettes; however, the heat generated serves to drive off much of the moisture as well. The GoA currently has two briquetting machines with a reported capacity of 12 tph each. One machine, located at Margahovit, was shown to ETIP. The other machine is reported to be at Dilidjan. There are other known deposits of peat known in Armenia, but these have been reserved by the Ministry of Agriculture for fertilizer.

Shamout

This hard coal deposit, near the industrial city of Alaverdi in the north central part of the country, is recognized at outcrop for over 10 km. Although the total thickness of the sequence is about 20 meters, the best portion is at the bottom of the sequence where three seams of about 2 meters each are separated by 0.5 meter of argillite partings. The roof of the entire sequence is a layer of argillite about 25 meters in thickness, and the floor of the sequence is a tuff. There is no particular faulting; however, there is localized folding/deformation, thought to be caused by intrusive dikes below. The zone of oxidation extends about 25 meters vertically from the surface.

The extent of the seams' down dip is unknown. The dip is approximately 25°, and the direction of the dip is coincident with the topography. The depth of the seam quickly exceeds 100 meters, so mining will most probably have to be executed by underground

methods. The quality of the coal is said to be from 3,000 to 5,000 kcal/kg (dry basis). Spontaneous combustion of the coal has been observed in an old exploration audit that smoked for over 1 1/2 years. Data was unavailable for total estimated reserves.

Djadjur

This lignite deposit in the northwestern corner of Armenia has a strike distance of about 2 km before it is truncated by faulting. It consists of upper and lower sequences, thought to be a repetition due to reverse faulting, that dip into the hill at 15 to 20°. Recent work suggests that the structure of the upper sequence is more complex than originally thought, but the lower sequence, which has been mined in the past, appears to be unfaulted from the outcrop to about 100 meters of down dip where it is truncated by the reverse fault.

The lower sequence has two seams of commercial value. The upper of the two seams is about 1.2 meters thick and has a heating value of about 5,200 kcal/kg (dry basis). The lower seam is about 2.5 meters thick and has a heating value of about 4,700 kcal/kg (dry basis). Both seams could probably be mined by open cast methods. The lower seam was previously mined by underground methods during 1943/45 and the upper seam has undergone minor workings. The mined material was used for home heating and central heating systems. The total amount mined was about 50,000 tons. According to one of the men who mined the coal in the 1940s, the coal tends to form lumps with few fines and has no appreciable clay partings. The material between the two seams is mostly argillites. Reserves remaining at Djadjur are estimated to be in the range of 400,000 to 500,000 tons.

Djermanis

This hard coal deposit, about 75 kilometers south of Yerevan by road, occurs as the remnant flanks of a plunging anticline created by faulting and sloughing. The strike length of the northwestern portion of the deposit is about 1,300 meters. One seam of interest has a thickness of 0.5 to 0.7 meters and a heating value of about 8,000 kcal/kg (dry basis). The moisture value is about 5%. Two other seams in the northwestern portion are only 0.1 and 0.2 meters in thickness but they serve to define the structure. The seams in the southeastern portion of the deposit are 0.5 meters and 0.7 meters, separated by about 8 meters, and have a strike length of about 600 meters. All of the seams dip at 30 to 40°.

The coal is reported to make good lump once it is away from the outcrop where it is weathered and breaks up easily. The elevation of the coal seams is about 2,200 meters. The hope of the expedition is that the coal in the southeastern portion of the deposit continues at depth as a major reserve. Drill holes are planned to explore this possibility with the idea of accessing such reserves via an audit at the level of the river that cuts through this rugged terrain. Data for total estimated reserves was unavailable.

4.2 PEAT

Peat is not a primary source of fuel for homes because there are not sufficient reserves of peat in Armenia. Most of the existing peat reserves are utilized by the Ministry of Agriculture for fertilizer.

Some experimental work is being carried out in Margahovit where mixtures of peat and coal are molded into briquettes for home use. A 50%-50% mixture of coal and peat is compressed with the aid of one of two briquetting machines to form 12 tph. The heat of compression of the machine drives off the moisture to provide the best results.

It appears that the use of peat is relegated to the local population for heat and soil additives. The most active deposits, found near Lake Sevan, have been nearly depleted. There is some concern that continued exploitation of the peat fields could create a hazard for the lake where they serve as a filter for inflow. Any further large scale development opportunities for peat will be closely coordinated with the Ministry of Ecology.

4.3 WOOD

This Ministry of Forests is responsible for developing some system to make wood available to the population and to prevent the indiscriminate cutting of trees. However, only a few forested areas are available in the country - generally in the northwest and southwest.

The GoA has plans for importing fuel wood and stockpiling sanitary cutting. However, it has no program for utilizing indigenous forests in the present crisis.

4.4 CONCLUSION

1. Georgian coal is the most cost-effective, short-term alternative fuel for home heating in Armenian cities during the 1993/94 winter; the second most cost effective fuel is wood.

2. Peat is probably not a primary source of fuel for home heating. However, peat may have a use as a binder in making coal briquettes for local home heating use.

3. Equipment and fuel sufficient to evaluate at least one coal deposit site should be supplied to Armenia in order to accelerate the development of indigenous coal for home heating in the 1994/95 winter. The cost of such equipment is estimated to be approximately U.S.$900,000.

4. Rapid coal-prospecting tools, such as geotelluric sensing devices, should be used to determine the best locations for continued coal exploration in Armenia.

Section 5

Indigenous Oil and Gas Exploration

5.1 GENERAL

Armenia has never produced measurable quantities of indigenous oil or gas. However, the existence of indigenous oil and gas has been documented over the past 40 years, and substantial exploration and testing confirm the existence of such reserves. Over 55 wells have been drilled and 2,250 km of seismic lines produced. The testing of these wells is documented. Twelve promising geological structures have been identified - some of them approved for production drilling prior to the collapse of the USSR.

Production of indigenous oil and gas in Armenia is part of the nation's long-term energy strategy. However, to reduce dependency on unreliable fuel supplies, a short-term drilling program could be pursued immediately, utilizing private funding. If such a short-term program yields positive results, it will attract foreign investors for further oil and gas exploration and development.

5.2 PROSPECTIVE SITES

In reviewing studies conducted by the Armenia Institute of Geologic Sciences, four oil and gas prospects were identified whose geologic structures have been mapped with considerable detail. United States industry experts have indicated that these prospects have excellent potential for hydrocarbon reserves and warrant serious consideration for drilling.

The major features of the prospects are presented in Table 5-1. Their location is shown on the map in Figure 5-1.

Table 5-1
Prospect Features

Prospect	Distance From Yerevan	Hectares	Depth to Known Oil and Gas	Estimated Potential Recoverable Reserves	
				Oil (million tons)	Gas (billion m^3)
Shorahbur	15 km NE	1,134	1,800 3,500 4,500	5.4	
Sevaberd	45 km SW	1,215	2,100 2,600	1	0.4-0.6
Octembarian	45 km SW	446	1,000 1,700 2,750		0.6-0.8
Getashen	45 km SW	648	1,450	Insufficient Data	Insufficient Data

Shorahbur

Shorahbur is located about 15 km northeast of Yerevan near Vokhchaberd village and is accessible by road from Yerevan. The prospect is located in extremely steep hills with relief variation of about 600 meters from the paved road elevation to discovery well No. 31. It is bounded by steep hills, controlled by a major fault with surface exposure on the northern rim, and by steep hills on the southern rim. The eastern rim also has steep hills, while the western side slopes downward, providing drainage to lower off-prospect areas. Water for drilling the discovery well was obtained from a creek that crosses the prospect. This creek would still be available as a water source if the original earthen dam were restored.

Mud disposal from well No. 31 was accomplished by means of impoundment in a natural pocket just east of the well. An oil sheen can still be observed by disturbing the pit. A stationary drilling rig still stands erect at the well site; four steel mud tanks and the original oil field road are also still in place. However, the road will require generous applications of locally available gravel because it winds down steep grades that may hinder site access by heavy vehicles during icy conditions in winter.

52

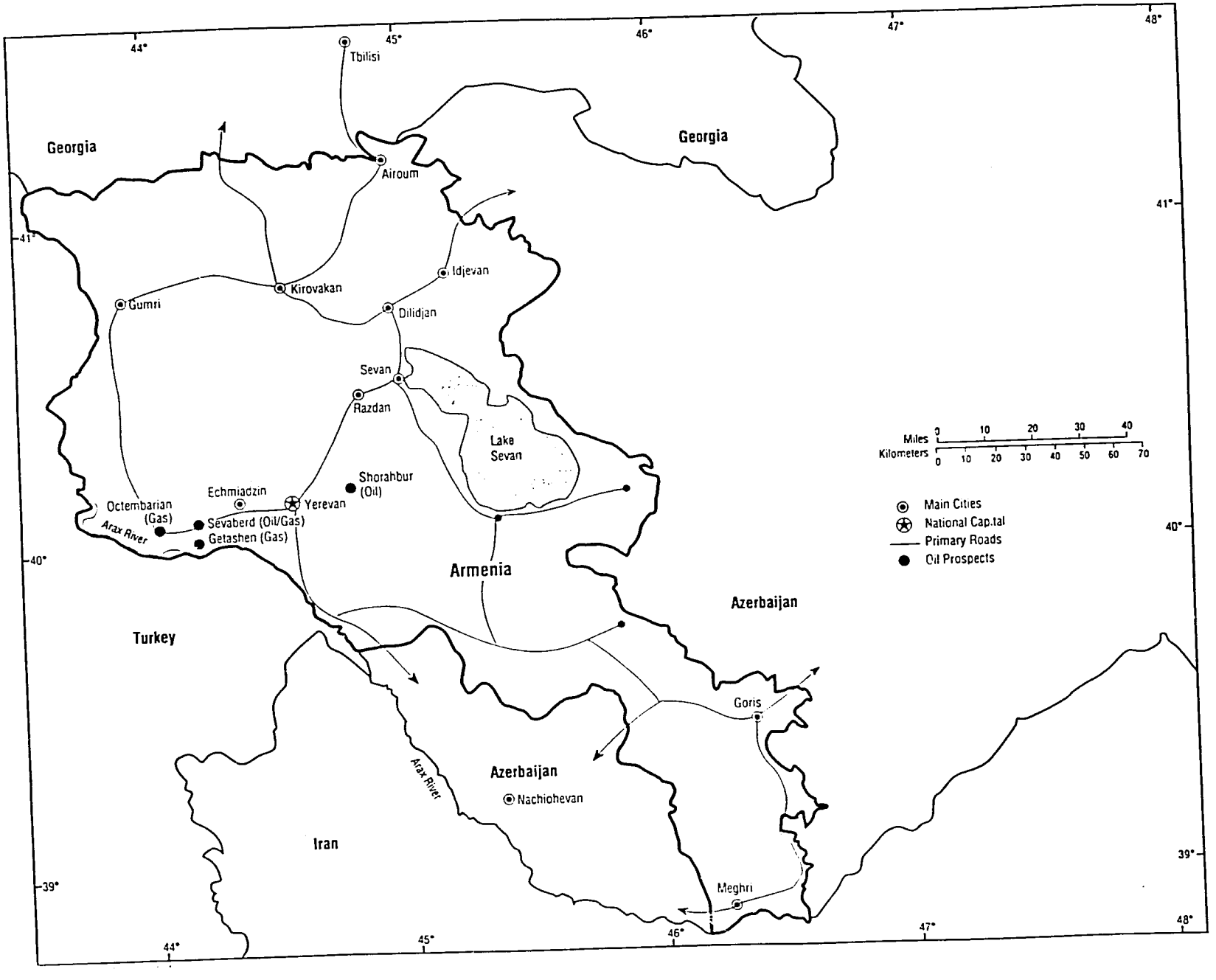

Figure 5-1 Oil and Gas Prospects in Armenia

The Armenian expert, Dr. Yuri Kagramanov of the Institute of Geological Sciences, who originally mapped the prospect, thinks that duplicating well No. 31 should be the first attempt at commercial production from this site. He would locate such a well about 150 meters southeast of No. 31. He has found three fault blocks in the prospect that need proving, all of which he expects to be oil productive; however, he expects no gas production.

Discovery well No. 31 produced small quantities of oil through perforated casing from the Middle Eocene and from an open hole through casing from the Upper Paleocene. Dr. Kagramanov thinks that the prospect may require seven wells for initial development. A controlling feature of this prospect is a thrust plate that tends to rise as it thrusts from well No. 31 to well No. 3. The producing formation is sandstone of unknown physical characteristics.

Reserves from the Middle Eocene (about 1,800 meters) are expected to be about 5 million tons (geologically); with 20% recovery, about 1 million tons of oil should be produced. The Upper Paleocene (about 3,500 meters) is expected to contain about 22 million tons of oil (geologically) that with a 20% recovery rate should produce 4.4 million tons of oil.

Sevaberd

Sevaberd is located about 45 km southwest of Yerevan. It lies in an easily accessible, gravelly plain, smoothed out by erosion and the action of the Arax River. It resides in the floodplain of the Arax, but the likelihood of flooding is not known. Oil field roads and the site laydown area can be prepared easily by spreading locally available gravel and ditching. Irrigation water abounds in this highly cultivated area and should be available from cement channels that traverse the countryside. However, another source of water may be required during the winter. Discovery well No. 18-P was plugged 28 years ago; however, the concrete structure, damaged by blasting, still exists. No environmentally sensitive situations were obvious. Paved roads transect the prospect in two directions.

Dr. Kagramanov suggests that one well be drilled to confirm the commercial potential of this prospect, which he expects to be productive of both gas and oil. He thinks the new well should be a duplicate of the No. 18-P discovery well. The number of wells required to fully develop this prospect is not yet known. The entire prospect is covered with a clay cap about 900 meters thick.

Reserves are estimated at 2 to 3 billion m^3 of gas (geologically). A 20% recovery should produce 0.4 to 0.6 billion m^3 of gas from the Upper Eocene. Oil was indicated in the Middle Eocene in the amount of 5 million tons (geologically), which should produce an estimated 1 million tons of oil.

54

Octembarian

The Octembarian prospect is also located in the Arax River floodplain. The site should be easily accessible by road after improvement with locally available gravel. Four to 5 km of road will require improvement with ditching and gravel. The permanent derrick used to drill discovery well No. 1 is still standing. This prospect is inside a guarded fenced area along the Arax River, across the border from Turkey. Based on available data, the reserve does not cross the river.

The Octembarian prospect is thought to be productive only of gas. The gas sands have a gross thickness of about 1,400 meters. Six potentially productive horizons out of a total of nine have been identified in the Oligocene. Individual sands are expected to be about 60 meters thick. One thick sand found in the Upper Eocene is thought to be productive. All of these sands appear to have water drive, and water contacts have been preliminarily identified. Core tests show the porosity of the sands ranges from 7 to 30% and show permeabilities ranging from 4 to 30 millidarcies. The best sands were not cored, so known values are thought to be low. The productive horizons are sandstone or layered clay-sandstone. The entire prospect is covered with a clay cap about 900 meters thick.

The Oligocene is estimated to contain 5 to 6 billion m^3 (geologically) of gas that may give 1 to 1.2 million m^3 of recoverable gas. The Oligocene sands are between 1,000 and 1,700 meters deep. The Upper Eocene is expected to contain 3 to 4 billion m^3 (geologically) of gas, which could produce 0.6 to 0.8 billion m^3 of the fuel.

Getashen

Getashen is located in the same flat easily accessible terrain as Sevaberd. Oil field roads and site laydown areas can easily be constructed of local gravel. Water should also be available from the concrete irrigation grid system. This prospect appears to exist in both Armenia and Turkey. It is bisected by the Arax River and situated in a guarded zone behind a fenced area. No environmentally sensitive areas were noted from the observation point. About 3 km of oil field road must be improved to make the site accessible.

Only one well has been drilled in this prospect - discovery well No. 47-K. This well was cased, perforated, and an attempt made to flow test it. Dr. Kagramanov indicated that the test was not successful due to massive sand and mud production. The well perforations were from 1,432 to 1,478 meters. Only gas is expected from this prospect.

5.3 DRILLING PLAN

Based on the available geological information and the indications of the presence of oil and gas, the four geological prospects discussed above are considered to be drillable.

It is assumed that confirmation drilling will commence as soon as funds are available and the proper investigation and arrangements for drilling can be made. A hypothetical drilling program is presented in this report simply to indicate the magnitude of cost and scope of such an initial program.

The program involves drilling a well at each of the four sites with two drilling rigs. Assuming one dry well will be encountered, the total number of wells drilled will be five.

5.4 DRILLING ACTIVITY

Since Armenia has no suitable drilling equipment, the following options for obtaining such equipment are available:

- Importing all equipment and supplies from the U.S. by air
- Using U.S. rigs presently inactive and stored in Russia
- Importing Russian rigs and modifying them for U.S. drilling practices
- Importing rigs from Europe, the Middle East, or Greece

The last two options are probably less costly than using U.S.-based equipment exclusively, but they are less likely to result in efficient operation.

The costs and scheduling of the hypothetical drilling program are based on the conservative assumption that all equipment, except the two rigs, supplies, and supervisory personnel will be transported by air from the United States. In this scenario, two existing U.S. drilling rigs presently inactive in Russia — and their auxiliary equipment — will be shipped by rail from Russia to Yerevan and transported to the drilling sites by truck.

5.5 COST OF DRILLING

The timing and costs of a shallow (3,000-meter) drilling program are presented in Table 5-2.

Table 5-2
Hypothetical Drilling Program

Steps in the Program	Months	U.S.$1,000
Initial Study and Prospectus Development	1.3	230
Prospectus Presentation and Acceptance	0.5	115
Mobilization of First Two Wells	4.0	3,269
Drill First Two Wells (dry hole cost)	2.0	3,916
Complete First Two Wells	0.5	1,333
Total, First Two Wells	8.3	8,863
Mobilization, Next Three Wells	0.5	1,311
Drill Next Three Wells (dry hole cost)	4.0	4,886
Complete Next Three Wells (including one dry hole)	0.5	1,333
Total, Next Three Wells	5.0	7,529
Total, First Five Wells (including one dry hole)	13.3	16,392

If a deeper drilling program of 4,500 meters is contemplated, it will cost more than double the shallow drilling program.

Production rates from gas wells may be expected to range from 28,000 to 708,000 m^3 of gas per day. Oil wells could range from 31 to 307 tons of oil per day. The data in Table 5-3 put this potential in perspective relative to Armenia's critical winter need by showing the number of wells required to deliver the equivalent energy in either gas or oil.

Table 5-3
Hypothetical Well Production to Meet Critical Need

Type of Well	Flow Rate	Number of Wells Required
Gas	28,320 m^3/day	145
Gas	708,000 m^3/day	6
Oil	30.66 tpd	124
Oil	306.6 tpd	12

57

5.6 GAS AND OIL USERS

Gas from the prospective wells can be piped and connected to the gas distribution system and used to generate power and heat. However, the gas will have to be processed and dried before introduction into the gas distribution system. The pressing method will be determined after the gas is sampled and analyzed.

Given the energy supply crisis and the absence of refining capability in Armenia, unrefined crude oil can be used as fuel in power plant boilers. Tests conducted on samples of crude oil recovered from previous drilling show that the oil is of high quality and has a relatively low sulfur content with an API gravity greater than 30°. If the oil produced from the indicated reserves is similar to this sample, it would be an appropriate fuel for use in thermal power plants.

Direct firing of crude oil is not the most efficient use of this energy source; however, it is the best short-term strategy in the present crisis. Longer term arrangements should be made to refine the crude oil into petroleum products for more efficient fuel utilization.

The successful production of either gas or oil would enable Armenia to begin to supply itself with a portion of the energy demand for next winter. Not only would this modestly improve the energy-supply situation, but it would be a tremendous boost to the morale of the country. Moreover, a demonstration that oil or gas is present in Armenia in economic quantities would provide the most persuasive evidence possible for the future development of a petroleum sector by private industry.

Section 6
Emergency Stoves

This section evaluates the in-country manufacturing capability for both coal- and kerosene-fired units. Under the current emergency conditions, apartment dwellers have no heat and a limited supply of electricity for heating because the electrical distribution system is not designed to accommodate electric heaters. Without heat, apartment dwellers are exposed to very serious health risks during winter.

Kerosene stoves provide a heating option in areas where district heat is curtailed. Given the cost of electric heat in both operating cost and the cost of damage to overburdened distribution systems, kerosene heat is desirable. Although kerosene prices are high (world market or higher), the fuel was available last winter. As discussed in Section 2.1.3, it is estimated that 125,000 apartments will need affordable stoves in which to burn kerosene.

To evaluate the in-country capability to manufacture coal- and kerosene-fired units, a survey was conducted and several plants were visited in July 1993. Table 6-1 details the results of the survey and plant visits. Figures 6-1 through 6-4 show a variety of stove designs ranging from fairly sophisticated and expensive (U.S.$15 to U.S.$17) to simple and cheap (U.S.$2 to U.S.$4).

Although none of the visited plants alone are capable of manufacturing 125,000 stoves, these plants represent only a small portion of the total number of similar and larger facilities in Armenia that, in total, could manufacture the required number of simply designed, inexpensive stoves. For example, the Rasdanmash plant, which previously manufactured military installations for the former USSR's Defense Ministry, is capable of manufacturing more stoves than any of the listed plants.

During discussions with plant managers regarding terms of payment, they indicated that privatization has not yet taken hold in the industry and that all plants are still owned and managed by the State. MEF officials informed the ETIP team that the State and the Ministry had opened accounts in foreign banks in different countries, including the United States. Therefore, there should be no problem with money transfers. At this point, all payments to the plants would be made by the State.

A review of the information presented in Table 6-1 leads to the following conclusions:

- Armenia's industry is capable of manufacturing the required amount of stoves.
- The absence of reliable sources of material (sheet metal) is a major problem that could be overcome with financing. This material supply task should be the responsibility of the GoA and its enterprises.

- Advanced financing is urgently required to enable stove production to begin as soon as possible since any delay will jeopardize the program. The amount of the advance should be approximately U.S.$150,000.

Table 6-1
Indication of Armenian Stove Manufacturing Capacity

Item	Armenergoremont	Machine Tool Plant at Kirovokan	Ardvin Plant at Kirovokan	Gasmash Plant
Material Required for 1 Stove	15 kg[1]	8 kg	15-20 kg	5 kg
3 months' Plant Capacity (9/1/93-(12/1/93)	25,000[4]	5,000	2,000	45,000
Amount of material currently at the plant	None	Enough for 50 stoves	None	None
a) Sources of Material Supply b) Means of Transportation c) Lead Time	None[2]	a) Ukraine[3] b) Thru Georgia by railroad[3] c) 1 month[3]	a) Internal Market b) Auto transport c) 3 weeks	None[2]
Required Advance Payment	U.S.$46,000 (30% of total cost of U.S.$230,000)	Cost of material apprx. U.S.$10,000	U.S.$3,000	U.S.$40,000
Cost of Production or Price	U.S.$9.2 cost/@ 25,000 ordered	U.S.$12 cost; U.S.$15 market price	U.S.$12 cost; U.S.$17 market price	U.S.$1.8 cost; material not included
Energy Supply Availability and Reliability	The plant is on electricity supply priority list	The plant is on electricity supply priority list	Reliability of electricity supply is estimated as 70% of req'd.	Electricity supply is available but not reliable
Availability of Premanufactured Parts	Not required	For 5,000 stoves	For about 500 stoves	Not required

Notes:

1. In all cases, sheet metal is the main material.
2. Requested that material be supplied by the GoA.
3. Private sector can provide approximately 50 tons of sheet metal @ U.S.$250/ton.
4. For coal use.

61

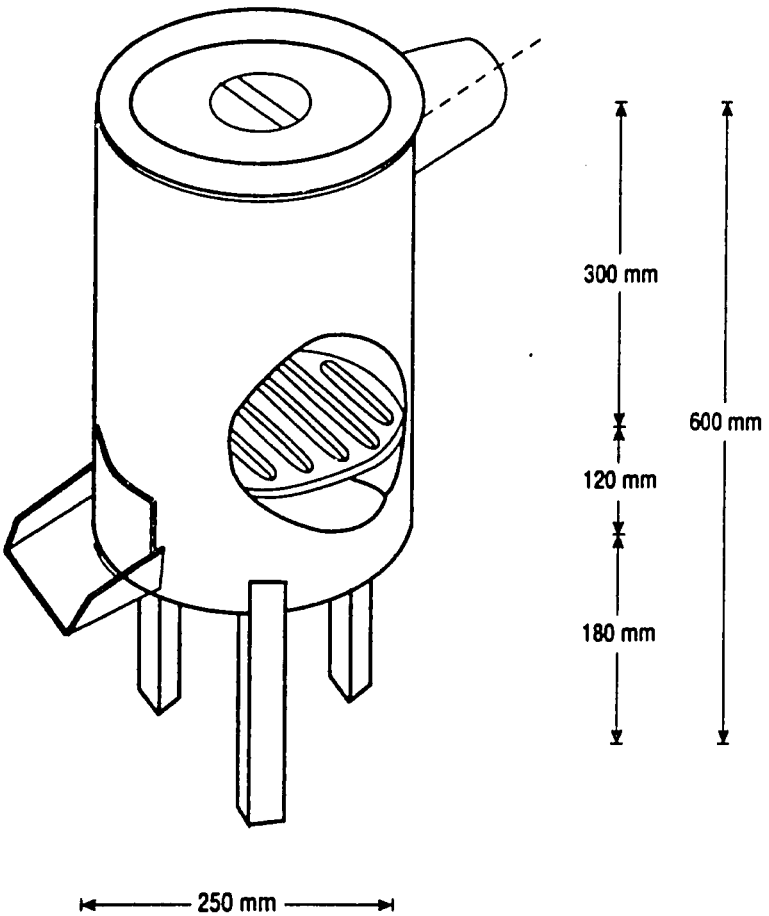

Figure 6-1 Sketch of Coal Stove Manufactured at the Armenergoremont Plant

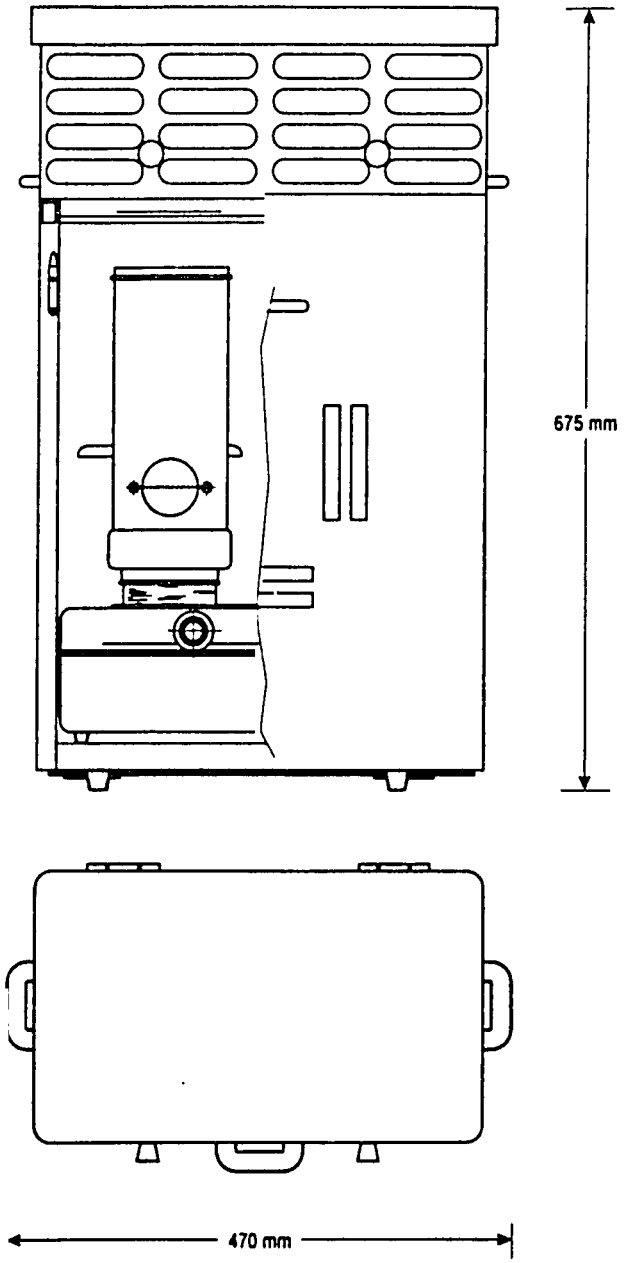

Figure 6-2 Sketch of Kerosene Stove Manufactured at the Ardvin Plant in Kirovokan

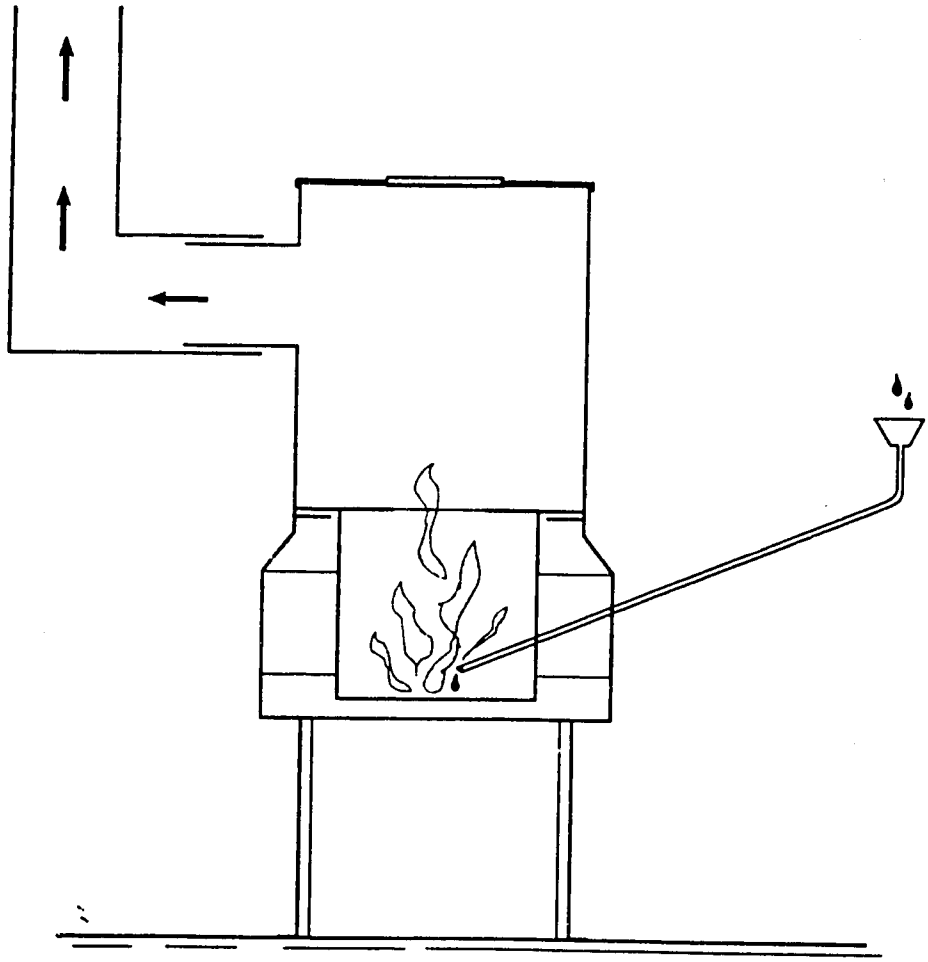

Figure 6-3 Sketch of Kerosene Stove Manufactured at the Gasmash Plant

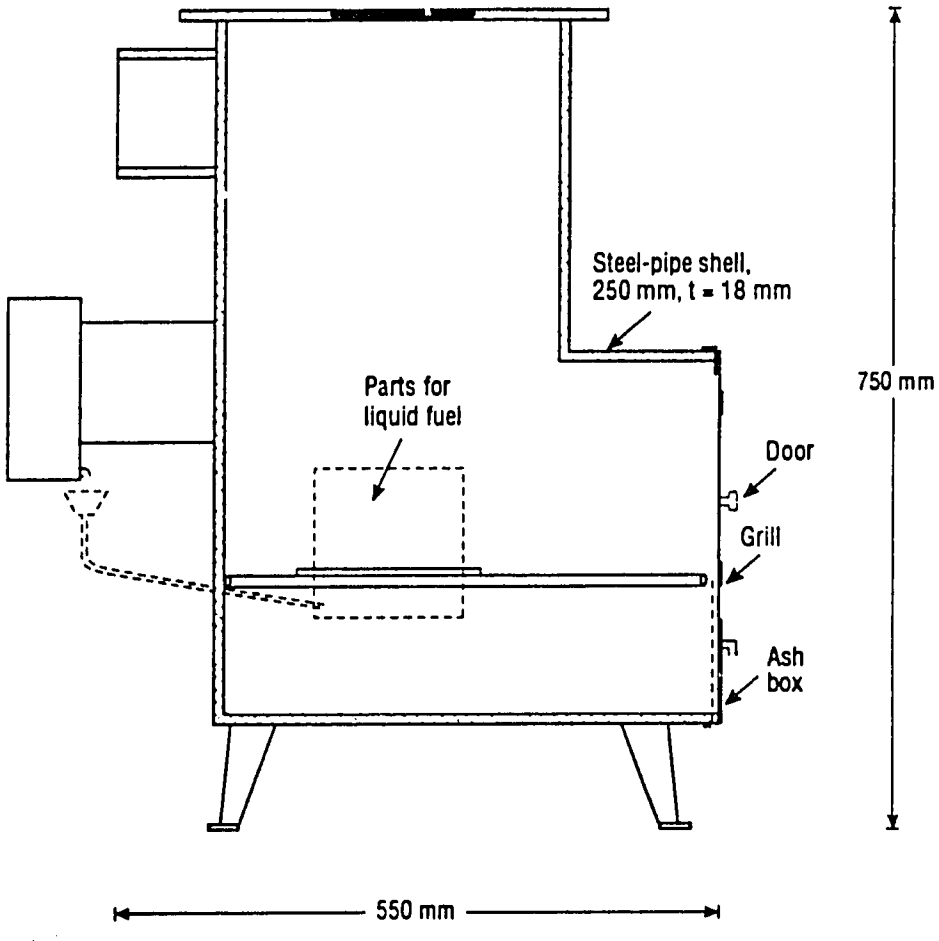

Figure 6-4 Sketch of a Universal Stove (Coal, Wood, Kerosene, Diesel Fuel) Manufactured at O.G.E.U.'s O.E.Z. Plant

Section 7
Transportation

7.1 PORT OF BATUMI

7.1.1 General Description

The Georgian Port of Batumi is located in the southeast corner of the Black Sea and open year-round for shipping activities. It has an annual capacity of 7 million tons, of which about 1.5 million tons are dry cargo such as grain, other loose cargo, and metals. The rest is crude oil or other liquid fuels such as mazout and diesel fuel. The Port has eleven berths that specialize in handling different types of cargo. The twelfth berth, located outside the breakwater, is used for tankers up to 40,000 tons. A description of the Port of Batumi, taken from *Lloyds' Ports of the World* (1987), is presented on the following page.

During a visit to the Port, facility capacities and other features relating to the shipment of cargo to Armenia were checked. A schematic of the Port configuration giving the characteristics of each berth is shown on Figure 7-1. The unloading facilities for liquid cargo belong to the refinery, which is located adjacent to the Port area. (See Section 2.3 for further detail.)

The location of the cranes and their respective capacities are shown on Figure 7-2. As can be seen in this schematic, the capacity of crane Nos. 30 through 33 are within the 10- to 20-ton range. The rest of the cranes have capacities in the 5- to 10-ton range. Therefore, a floating crane with a 100-ton capacity is needed to handle the biggest pieces of cargo.

Railroad spurs alongside berth Nos. 6 through 9 allow the direct transfer of general cargo from ships to railroad cars. Figure 7-3 shows the configuration of berths and railroad spurs.

66

From *Lloyd's Ports of the World (1987):*
BATUMI, Black Sea
Lat 41° 39' N; Long 41° 39' E. Situated at the head of Batumi Bay, on the S part of the Caucasian coast. Year round navigation.
Admiralty Chart: 2247 **Admiralty Pilot:** 24
Time Zone: GMT + 4 h **UNCTAD Locode:** SU BUS
Principal Facilities:

P	Q	Y	G	B	T					

Authority: Port of Batumi Authority, Gogebashvili ul. 20, Batumi 384500. *Tel:* 32959, *Cables:* Morport Batumi
Approach: The recommended anchorage area is located NNE of the E side of Burun-Tabiya Point in depths ranging from 15 m to 20 m. Anchorage in the inner roads can only be obtained with prior permission of the Harbour Master and at the discretion of the pilot. Vessels without cargo must enter port with ballast on board ensuring draught force not less than 1.5 to 1.8 m. Vessels entering or leaving port are not allowed to pass by tankers loading at the outer side of the Oil Jetty at a distance of less than 80 m
Pilotage: Compulsory. Pilot boards at the Reception Buoy in the outer roads, or in the inner port roads. Masters of vessels should contact the Port Authority 48 hours before expected arrival and again at 24 h and confirm 4 h prior to ETA with request for pilot. 24 h service is available
Radio Frequency Information: Port call sign UFA. Batumi Radio: 500 & 2182 kHz (calling and working). Batumi Radio 2, Port Controller: VHF Channel 16, 156.8 mHz
Weather: Winds from the SW, W and NW can be particularly troublesome, causing a strong variable current with surge in the port. This phenomenon is known as the Tyagun, and although not frequent, usually occurs between October and May. At the time of the Tyagun, vessels are recommended to cease loading/discharging operations, vacate the berth and anchor off, or secure to mooring buoys or put to sea
Accommodation: Harbour protected from N and E winds by two moles. There are a total of twelve berths with depths alongside ranging from 8 m to 13 m. Five general cargo berths are located on the S side of the basin with depths of 8.2–9.6 m. There is a passenger terminal and a shallow coastal trade harbour
Storage: Covered warehouses and concreted open storage areas are available
Cranes: Mobile electric portal cranes of up to 20 t cap, floating cranes up to 30 t and one of 100 t cap, also various other cargo handling equipment is available
Provisions: Supplies of fresh provisions are plentiful. ISSA members available
Water: Fresh water available at the quays and also by barge
Bulk Cargo Facilities: Equipment for grain handling includes air-powered loaders with a cap of 120 t/h
Tanker Terminals: Three berths for tankers are located alongside Neftyanoy Mole, max d 9.5 m. There is also a buoy berth outside the breakwater, accommodating tankers of up to 40 000 dwt. A large oil refinery is situated on the SE shore of the bay
Bunkers: Available at the oil berths and also by barge
Shiprepairs: Only minor repairs can be effected
Towage: Compulsory for berthing and unberthing
Principal Imports and Exports: Exports: Oil and oil products. Other cargoes handled include alumina, bulk grain, sugar, metals and general cargo
Medical Facilities: There is a hospital in the town
Shipping Agents: Batumi Inflot Shipping Agency, Gogebashvili ul. 20, Batumi 384500. *Tel:* 32307 & 27415, *Cables:* Inflot Batumi, *Telex:* 412673
Lloyd's Agents: Ingosstrakh Ltd., Pjatnitskaja ul. 12, Moscow M-35, *Tel:* 231 1677, *Cables:* Ingosstrakh, *Telex:* 411144 INGS SU

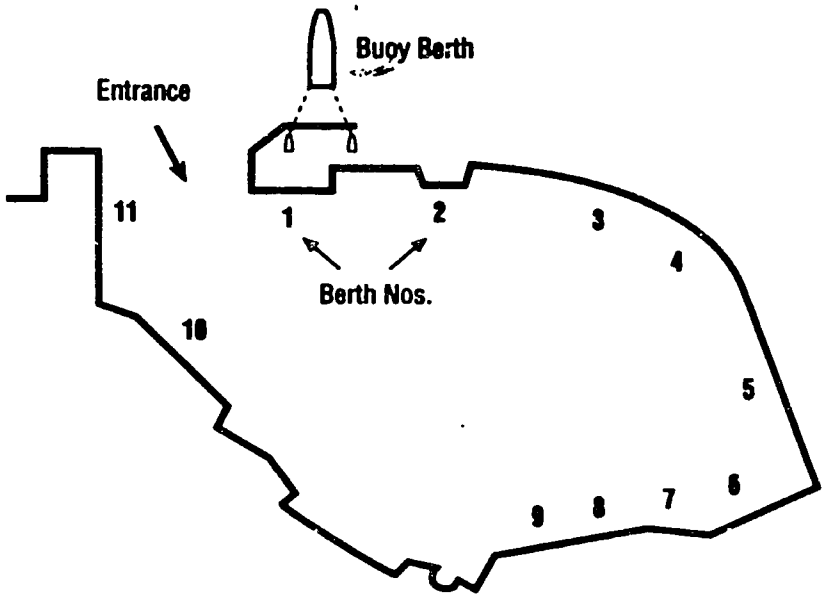

Note: Overall depth of the channel varies from 12.5 to 90 m.

Berth Characteristics			
Berth No.	**Length (m)**	**Depth (m)**	**Purpose**
1	200	11	Liquid Fuels
2	140	9.4	Liquid Fuels
3	165	9	Liquid Fuels
4	–	–	Under Modification
5	–	–	Under Modification
6	186	7	Metal
7	250	10.5	Grain, Metal
8	180	9.5	Grain, Clay
9	195	9.3	General Cargo
10	220	11	General Cargo
11	190	7.5	Passenger Terminal
Buoy Berth	250	12.4	Liquid Fuels

Capacity (tpd)	
General Cargo	– 600
Grain	– 1,000-3,500
Metal	– 600-800

Figure 7-1 Port of Batumi Schematic

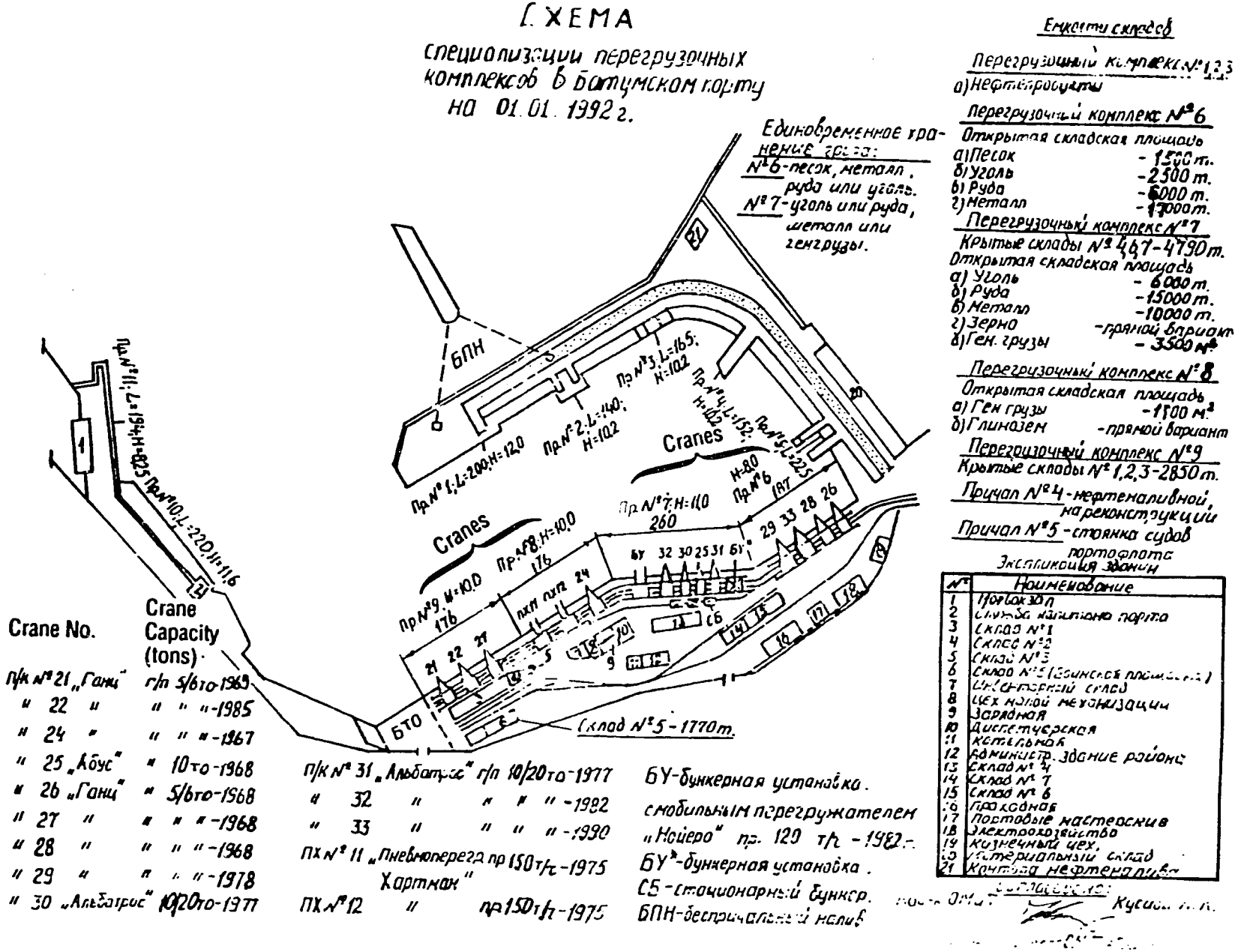

Figure 7-2 Location and Capacity of Cranes at the Port of Batumi

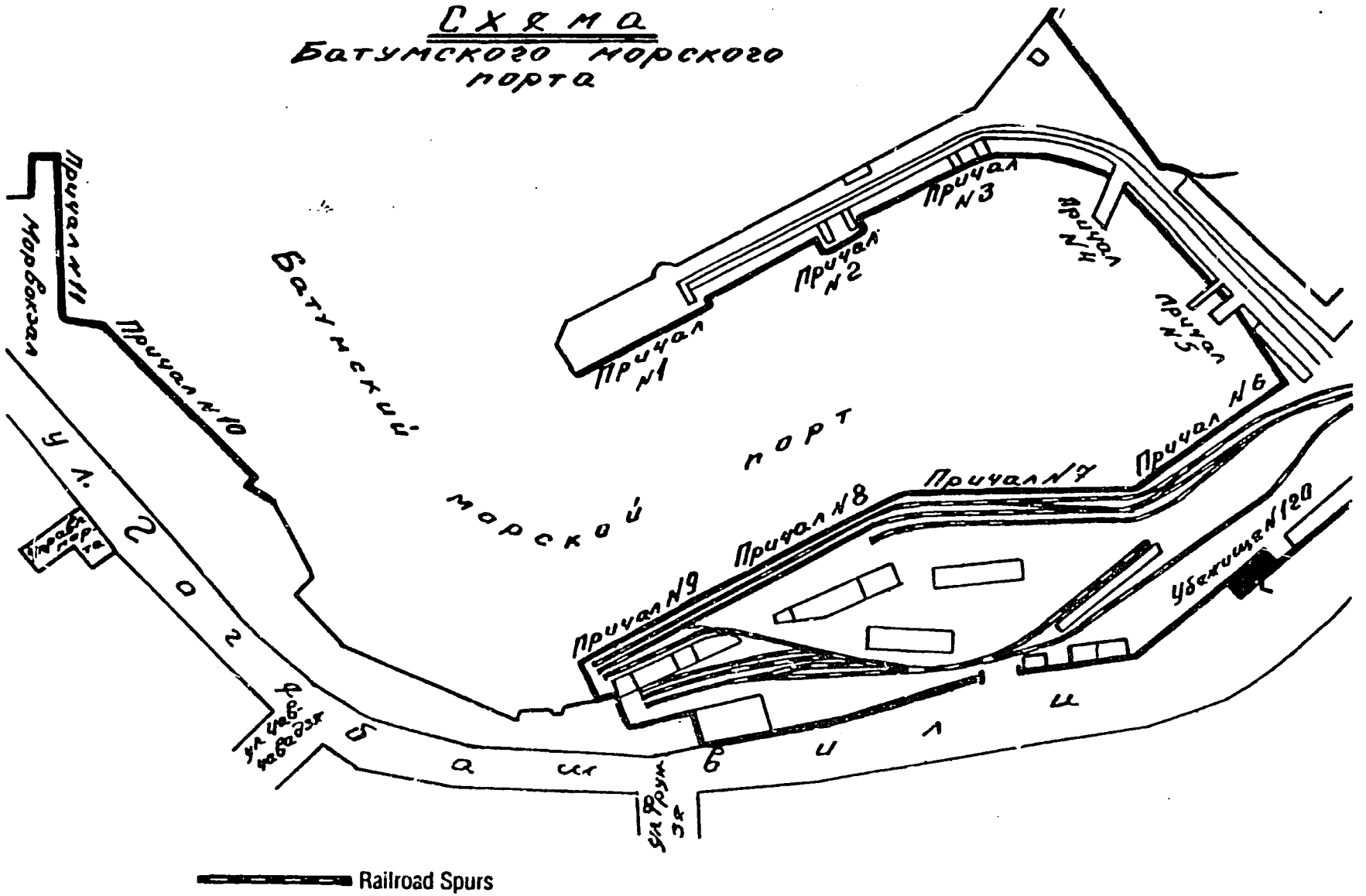

Figure 7-3 Port of Batumi Railroad Spurs

70

7.1.2 Port Charges and Tariffs

Terminal and Other Port Charges

The Port Authority determines the terminal and other Port charges, based on the following:

1.	Towage dues	U.S.$0.194/ton
2.	Light dues (lighthouse, etc.)	U.S.$0.0029/ton
3.	Berth dues	U.S.$0.0022/ton
4.	Sanitary dues	U.S.$0.0014-0.0018/ton
5.	Pilot in	Based on vessel's size
6.	Towage in	Based on vessel's size
7.	Mooring in	Based on vessel's size
8.	Pilot out	Based on vessel's size
9.	Towage out	Based on vessel's size
10.	Mooring out	Based on vessel's size

Regular charges for items 5 through 10 are calculated as follows:

$$L(m) \times W(m) \times D(m), (m^3)$$

where D = Draught, L = Length, W = Width

The resulting value should be close to the tonnage of the ship. The charge is applied on weekdays between 8 a.m. and 4 p.m. Outside these weekday hours and on weekends and holidays, the charges increase.

Unloading Tariffs for Liquid and General Cargo

Section 2.3.3, Tariffs, discusses the cost of unloading liquid fuel at the Port of Batumi.

The unloading tariffs for general cargo are computed as follows: General cargo of standard size (less than 20 tons): U.S.$10 - $15/ton. If the cargo weight exceeds 20 tons, a floating crane is required. A 100-ton floating crane belonging to the Port of Batumi has temporarily been moved to the Port of Poti. The U.S.$12/hr rate for this crane was charged for CIS cargo. For a 35-ton floating crane from the Port of Novorossisk, which was at the time in the Port of Batumi, the rate was U.S.$30 - 40/hr.

In general, tariffs vary according to fuel cost and seem to be set arbitrarily. For grain (or other loose cargo), the rate was $6/ton for the pneumatic unloader and $4/ton for the bucket unloader.

7.1.3 Conclusions

The Port of Batumi facilities are capable of unloading cargo from ships onto flatbed railroad cars, but the heaviest items should not exceed 30 tons. There is no technical problem that would prohibit the transport of fuels and other commodities from the Port of Batumi to Armenia.

Liquid cargo unloading facilities are adequate - with the exception of mazout, which can be unloaded only during the warm part of the year from April 15 to October 15, as discussed in Section 2.3.2.

7.2 RAILROAD

7.2.1 General Information

Before the blockade four rail lines served Armenia — two from Azerbaijan, one from Georgia, and one from Iran (Tabriz) through Nikachevan (Azerbaijan territory). Eighty percent of all cargo, including fuels, used to come from Azerbaijan directly. The remaining 20% came over the Tbilisi-Yerevan rail line, a line that was primarily used for passenger trains. In addition, from Turkey there is a rail line to the Turkish-Armenian border, near Gumri. However, the gauge of the Turkish railroad is different from the one in Armenia. Currently, only the Georgia line is open, all others are closed.

Most rail lines in Armenia and Georgia are electrified. It is estimated that the Georgian line can carry a maximum of 3.5 to 4 million tons of cargo per year, including liquid and solid fuels, food, and goods for barter. This is the total capacity allocated to Armenia on this line. With an average load of 55 tons per car and 30 cars per train, the average (maximum) capacity is about 10 trains per day for each day of the year, or about 18,000 tpd.

The line to Tbilisi goes through the Marneuli region, located on the Armenia-Georgia border and occupied by Azerbaijanis. It is in the Marneuli region that both a railroad bridge and pipeline were destroyed, stopping all fuel transport into Armenia. At Tbilisi, the rail line connects with the main rail line to Russia, via the Ukraine. This line travels along the Black Sea and through the Abkhazia region, where there is current conflict. As a result, this line is closed, and direct rail transport to Russia is not possible.

72

An alternate rail line between Tbilisi and the Black Sea ends at the Port of Batumi near the border of Turkey and Georgia. It is this line that is used to bring cargo into Armenia, as shown in Figure 7-4. Liquid products from Russia are shipped by freighter from Novorossisk to Batumi, then transferred to rail cars. At present, the number of trains arriving in Armenia is far less than the maximum. In January and February, the average was about one train per day. As a result, many goods are not being transported. Coal is an example of a commodity that is unavailable due to transport limitations.

Since bridges and pipelines have been periodically destroyed, the GoA has entered into an agreement with Georgia to safeguard the rail line and gas pipeline. However, Georgia is not able to assure the security of these facilities. Now the GoA has agreed with Georgia to use mutual forces to guard the lines.

The total length of Georgia's railroads is about 1,586 km, of which the two track line length is 295 km. The length of the railroad between Batumi and Yerevan is about 750 km. The railroad is primarily electrified. The Georgian rail transportation equipment includes:

- 290 electric engine cars
- 205 locomotives
- 1,340 passenger cars
- 14,826 cargo cars, including:
  - 4,117 covered-top cars (for cargo that requires protection against rain)
  - 1,355 open flatbed platforms
  - 3,402 all-metallic open-top cars
  - 1,982 tank cars (liquid cargo)
  - 85 refrigerating cars
  - 3,885 other types of cars

The general condition of the equipment and the railroad tracks has been deteriorating since the dissolution of the USSR. As an example, the average number of cars per train was reduced from 40 to 30, with a maximum net weight per train of 1,800 tons (weight of cargo). The average speed of the trains was also reduced from 40-50 km/hr to 25-30 km/hr. The causes behind these changes are as follows:

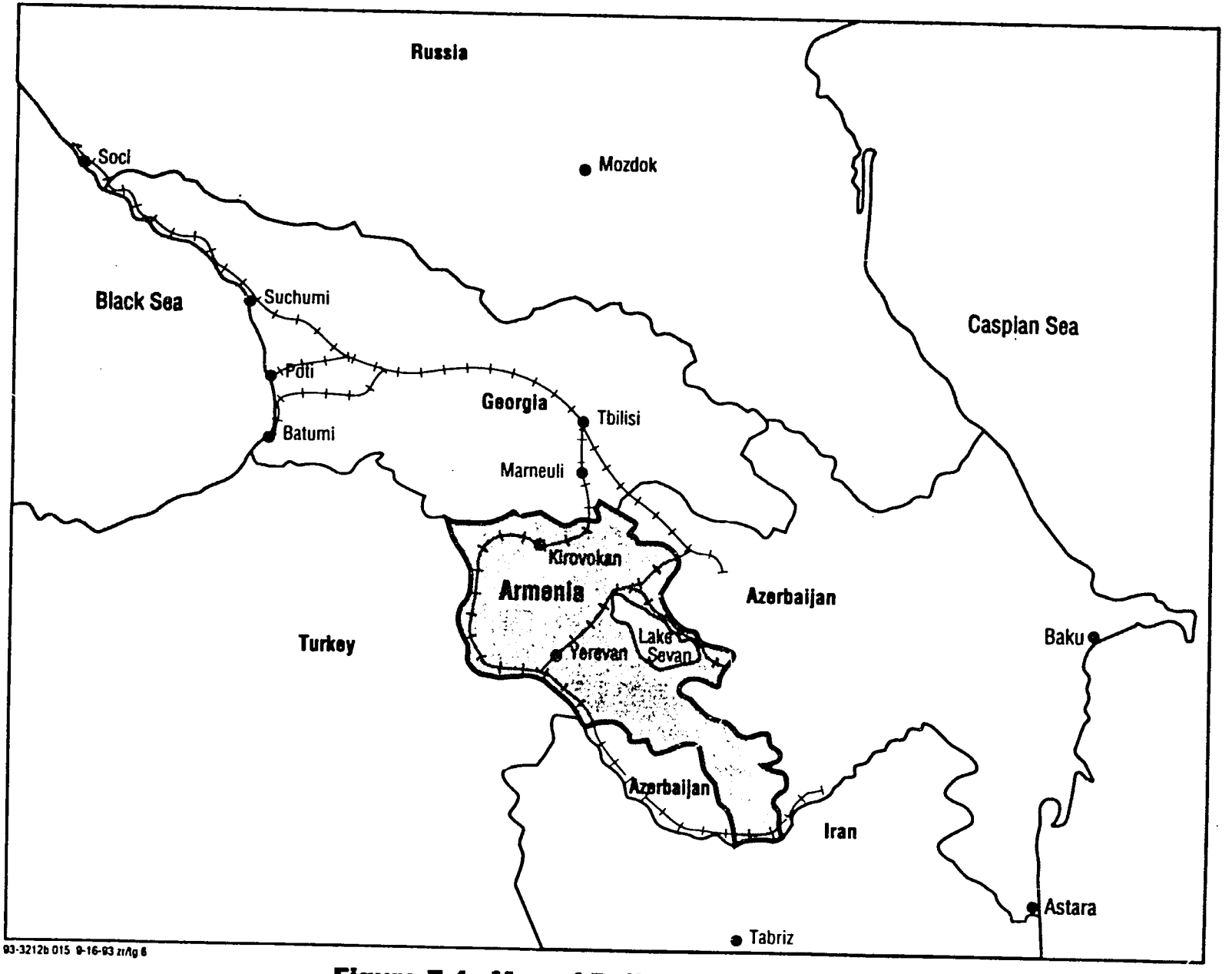

Figure 7-4 Map of Railroad System from the Port of Batumi to Yerevan

- Difficulties maintaining electrical engines in a proper state
- Deterioration of the rail support structure, although maintenance work is ongoing
- Lower than normal electrical power, especially during the winter period
- A deteriorating communications and dispatching system, exacerbated by the theft of copper wire and equipment

However, in spite of the current adverse conditions, there are no technical problems involved with shipping all cargo to Armenia.

The actual number of tank cars loaded at the terminals is lower than the terminal design capacity. Light fuels (diesel fuel, benzine, kerosene) are being loaded only during daylight (approximately 12 out of 24 hours) to avoid the theft of the fuel. Additionally, the same section of railroad track is being used for passenger trains, as shown on the overall plan of the Batumi railroad station in Figure 7-5.

Therefore, the number of tank cars that can realistically be filled each day is:

- Mazout, crude oil: 60 tank cars/day (3,600 tpd)
- Diesel fuel, kerosene: 30 tank cars/day (1,500-1,800 tpd)

At this rate, the Armenian needs can be accommodated.

It was also found that there will be no problems in shipping heavy machinery, such as drilling rig equipment, from Batumi to Yerevan via the railroad. The biggest piece of the disassembled rig is a mud pit with overall outline dimensions of 3 x 2.4 x 13 meters, weighing approximately 27 tons. The heaviest piece is a draw pump, somewhat smaller than the pit, but weighing approximately 29 tons. The load capacity of a flatbed car is 60 tons. If cargo installed on a flatbed car does not exceed the overall dimensions of 2.7 meters wide x 3.1 meters high x 14.5 meters long, it is considered "normal," as shown in Figure 7-6. The "height" dimension includes the height of the car. However, if the cargo exceeds these dimensions, it is considered to "require special permission." In all cases, the cargo must not exceed 3.4 meters wide x 5.3 meters high x 25 meters long.

Therefore, special permission is required for some pieces of a drilling rig, but the transport of drilling rigs is not prohibited.

- Difficulties maintaining electrical engines in a proper state
- Deterioration of the rail support structure, although maintenance work is ongoing
- Lower than normal electrical power, especially during the winter period
- A deteriorating communications and dispatching system, exacerbated by the theft of copper wire and equipment

However, in spite of the current adverse conditions, there are no technical problem involved with shipping all cargo to Armenia.

The actual number of tank cars loaded at the terminals is lower than the terminal design capacity. Light fuels (diesel fuel, benzine, kerosene) are being loaded only during daylight (approximately 12 out of 24 hours) to avoid the theft of the fuel. Additionally, the same section of railroad track is being used for passenger trains, as shown on the overall plan of the Batumi railroad station in Figure 7-5.

Therefore, the number of tank cars that can realistically be filled each day is:

- Mazout, crude oil: 60 tank cars/day (3,600 tpd)
- Diesel fuel, kerosene: 30 tank cars/day (1,500-1,800 tpd)

At this rate, the Armenian needs can be accommodated.

It was also found that there will be no problems in shipping heavy machinery, such as drilling rig equipment, from Batumi to Yerevan via the railroad. The biggest piece of the disassembled rig is a mud pit with overall outline dimensions of 3 x 2.4 x 13 meters, weighing approximately 27 tons. The heaviest piece is a draw pump, somewhat smaller than the pit, but weighing approximately 29 tons. The load capacity of a flatbed car is 60 tons. If cargo installed on a flatbed car does not exceed the overall dimensions of 2.7 meters wide x 3.1 meters high x 14.5 meters long, it is considered "normal," as shown in Figure 7-6. The "height" dimension includes the height of the car. However, if the cargo exceeds these dimensions, it is considered to "require special permission." In all cases, the cargo must not exceed 3.4 meters wide x 5.3 meters high x 25 meters long.

Therefore, special permission is required for some pieces of a drilling rig, but the transport of drilling rigs is not prohibited.

76

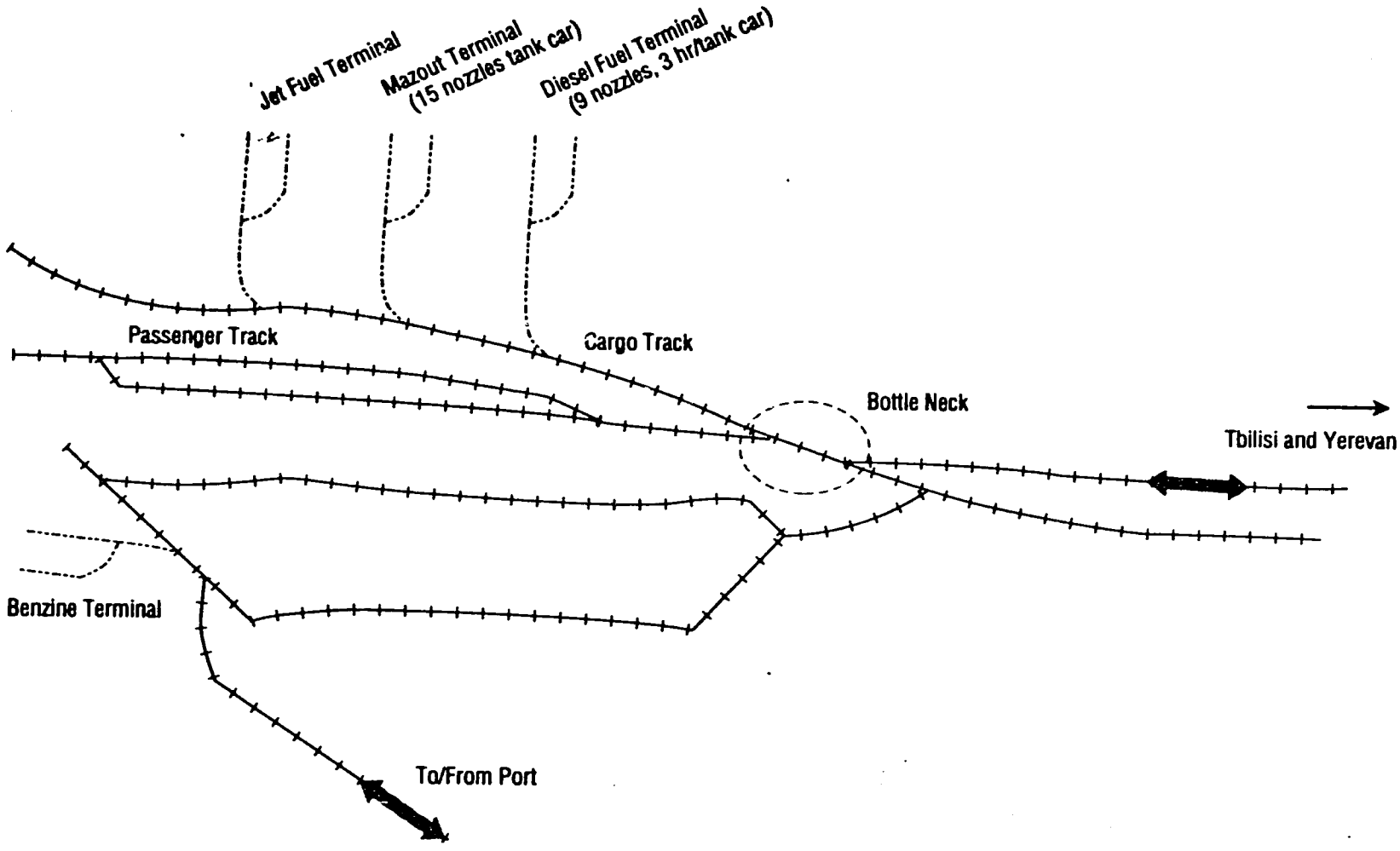

Figure 7-5 Plan of Batumi Railroad Station

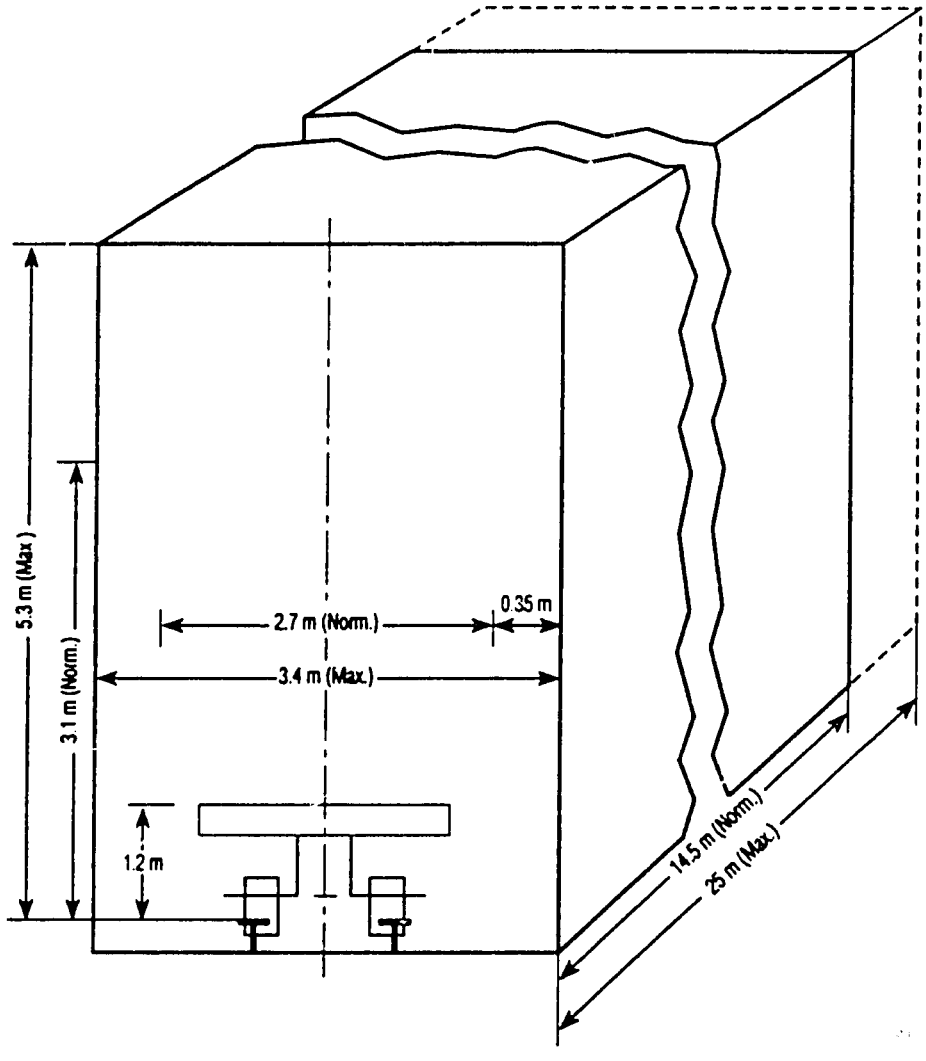

Figure 7-6 Normal and Maximum Allowable Dimensions of General Cargo on Flatbed Cars

7.2.2 Tariffs

Transport regular tariffs and fees are generally a function of car type and distance. The fees include a state tax of approximately 14% and additional taxes of 34% of the regular tariff. Transport fees may also include the cost of guarding the car, if required.

Table 7-1 provides some information on rail car tariffs.

Table 7-1
Rail Car Tariffs

Car Type	Unit	Regular (U.S.$)	State Tax, 14% (U.S.$)	Other Taxes, 34% (U.S.$)	Security Guard (U.S.$)	Total U.S.$
Tank car	ea	218	31	74	50	373
Flatbed car	ea	168	25	57	50	299
Covered top wagon (grain)	ea	212	30	72	50	364

The charges listed in Table 7-1 apply strictly to the distance between Batumi and Yerevan. Table 7-2 summarizes the data collected on railroad transport for sample quantities.

Table 7-2
Liquid Fuel Transportation Data

Fuel	Quantity (tons)	Number of Cars Req'd	Number of Trains Req'd	Cost (U.S.$)	Delivery Time (days)
Kerosene	15,000	300	8-9	111,900	10-11
Diesel Fuel	30,000	600	16-17	223,800	20-21
Mazout	20,000	333	11	124,200	12-13

According to the regular schedule, it takes from 24 to 32 hours for a train to get from Batumi to Yerevan.

7.2.3 Conclusions

- The capacity of the railroad limits the amount of liquid fuel brought into Armenia since it can accommodate only 60 tank cars/day (3,600 tpd) of

mazout and 30 tank cars/day (1,650 tpd) with diesel fuel or kerosene. However, the railroad has enough tank cars to deliver the required amount of liquid fuel for emergencies to Yerevan within a reasonable period of time.

- Drilling rig equipment can also be transported by railroad from Batumi to Yerevan. A request for special permission is necessary at least a month prior to shipment.

7.3 TRUCK TRANSPORT

A highway connects Batumi with Yerevan, a distance of about 750 km. At a truck's average speed of 45 km/hr, a round trip should take 33 hours. The total traveling time for a round trip might exceed two days, including maintenance, loading/unloading, and resting time for a driver.

Considering the 65,000 tons of liquid fuel required to meet Armenia's emergency needs, approximately 450 10-ton trucks would be required to transfer the fuel in 30 days. It would be extremely difficult to organize such a large number of trucks for this effort. Therefore, in our view, truck transport does not present a viable option for transportation of the required amount of fuel.

80

Section 8
Yerevan Electrical Distribution System

8.1 PRESENT SYSTEM STATUS

The electrical distribution system for the city of Yerevan and the surrounding communities has been in service since the early 1930s. Although the system equipment is old and in poor repair, it has extensive redundant protective devices, far beyond those that would be necessary in the United States. The system utilizes 110 and 35 kV transmission and 35, 10, 6, and 0.4 kV distribution networks. The distribution system does not operate with automatic control and switching but relies on telephone links and radio communication for load dispatching and control. The system is operated and maintained by ARMENERGO, a government-owned utility.

In the past three years, repair and replacement of defective and damaged equipment has not been possible for economic reasons. It also appears that the replacement of fuses and breakers was not accomplished in a timely fashion and, in more than a few cases, the protective devices were bypassed, creating a situation where the system was not adequately protected from overload conditions.

Consequently, the distribution system sustained considerable damage during the past winter due to overloads. The system was not completely under the control of the utility operations personnel and, with the deletion and disabling of many of the protective devices, it was reduced to a fraction of its previous capability by the destruction of transformers, cable, substations, and switchgear. A list of the equipment required to implement a critical portion of the necessary repairs is presented in Table 9-3 in Section 9.

During the past winter, electricity was used extensively for space heating, but the system was not designed for this type of service. As the winter became more severe, more of the population began to use electric resistance space heaters to supplement the meager heating available from other sources. Where areas were not served by power due to previous damage, "pirate" extension lines were utilized by the innovative customers to tap neighboring power supplies. Additionally, the ability to curtail residential service and maintain critical services (hospitals, food production, police, and the like) was never a feature of the system. The electric service for a hospital could not be isolated from the neighborhood in which the hospital was located. Therefore, the dispatching and control of power became very difficult.

During the coldest part of last winter, the single gas pipeline serving Armenia was destroyed by terrorists, and for 23 days the nation had no fossil fuel. The only available electric power came from hydropower stations and was consumed voraciously for heating, resulting in extensive destruction of the remaining electric distribution system in the city.

81

8.2 REMEDIES

ARMENERGO has prepared an extensive list of the replacement equipment and cable required to return the system to service. The total cost of this equipment is approximately $55 million. However, the utility is aware that other issues must be addressed such as the basic philosophy governing operation of the power distribution system during both normal and crisis periods. This issue includes the need to isolate critical facilities so that power to an area can be curtailed without disturbing the facility. This particular design feature is the subject of a GoA policy decision termed "Decision 61," which requires that power be assured to those facilities determined by the Ministries to be critical to the survival of the population. The equipment necessary to implement Decision 61 is listed Table 9-2 of Section 9.

Another issue involves the need for assurance of the integrity of system protection features and devices. The issue difficult to address because it concerns basic protective security as well as general operating philosophy. The system may be operated at substantially higher power levels for short periods of time without placing the equipment at risk. However, the period of time and operating power level are a function of the installed equipment and must be individually determined for each subsystem. The operation of the entire system on a rolling blackout basis could be accomplished for limited application during emergencies. The protection of the replaced electrical equipment could be assured by a combination of similar actions.

The power system is operated without metering of even the most basic nature. The utility is not able to determine power consumption at any level of service — district or individual residence. Since residential users are not metered, they are unaware of their own level of consumption and the consequences of inefficient usage. To stimulate conservation among these users, it has been suggested that residential meters be installed and a reasonable rate charged.

This report discusses the minimum level of equipment necessary to return the system to near normal operation. It does not address the systemic infrastructure remodeling required to assure protection of the equipment.

Section 9

Energy Supply Options

The information contained in this report has been used to assess potential courses of action to address Armenia's critical energy supply needs. The assessment presents a number of options that could be taken by the GoA to significantly reduce the effects of the winter season as well as promote the long-term health of the economy. These options can be selected individually or in combination with other similar options; and they could be undertaken by institutions or agencies as possible lending or support opportunities. Section 9.1 summarizes the 23 options assessed by ETIP.

Section 9.2, Table 9-5, presents a preliminary cost estimate to implement the options, including — in most cases — the differential cost between CIS and Western sources. Some of the 23 options have not been fully developed in the cost estimate because they are deemed appropriate only for the longer term — beyond the scope of this report — or no longer viable. However, references to these options have been retained in the table for the sake of continuity.

Section 9.3 provides a preliminary schedule for the emergency- and near-term options, indicating their specific activities and time requirements.

9.1 ENERGY SUPPLY OPTIONS SUMMARY

9.1.1 Option 1 — Purchase Dedicated Fuel and Stoves for Survival

Under present conditions, providing residential heating during the winter will be extremely difficult for the general population, but the ability to heat living spaces will be critical for the segment of the population that has no affordable alternative to central heating. This segment of the population is estimated to live in large apartment structures and number approximately 125,000. The residents of single family dwellings are assumed to be capable of some minimal, alternative heating.

The estimate of heating needs is based on a survival period of 30 days. The assumed quantity of heating fuel (kerosene) needed to heat one room for one day is 3 liters. The designation of a 30-day period is based on experience from last winter when the natural gas pipeline was destroyed and out of commission for a period of 23 days. It represents an attempt to indicate the minimum quantity of kerosene that should be acquired to provide some measure of protection in similar circumstances.

The estimate for this option also assumes that the family unit which is unable to afford additional fuel will also not be capable of acquiring a stove to utilize the fuel. As indicated in Section 6, the capability exists in Armenia to manufacture the simple stoves required for

this purpose. Therefore, the option includes providing the indicated number of stoves to those unable to purchase them.

Option 1a is to provide diesel fuel for a similar period of time to ensure continued delivery of food to the population.

9.1.2 Option 2 — Purchase Dedicated Supplies of Mazout

The indicated quantity of mazout required to last a 30-day period is determined to be 19,200 tons. This will provide for power generation during one critical period similar to the past winter.

9.1.3 Option 3 — Implement Emergency Electricity Supply to Critical Facilities

This option implements the GoA's requirement to provide emergency power to "Critical Facilities" during periods of extraordinary energy conditions, as described in a document called "Decision 61."

- The facilities determined by the GoA to be critical to the survival of Armenia include hospitals, bakeries, communications centers, and police. The design for modifications to the city network is being prepared by the Yerevan Design Institute (YDI).

- The materials required to implement Decision 61 are listed in Table 9-1. This equipment will provide for the installation of dedicated electrical power circuits as well as emergency diesel generators. These dedicated circuits will ensure an uninterrupted power supply to the critical facilities mentioned above. In cases where it is impractical to run dedicated circuits, emergency diesel generators will be utilized.

- The prices indicated for the materials in Table 9-1 were obtained by the YDI and are based on data applicable on January 1, 1993.

9.1.4 Option 4 — Procure and Install Electrical Equipment for the Repair of the Distribution Network (Yerevan)

The list of equipment in Table 9-2 was requested by the power transmission operating company, ARMENERGO, to repair the electrical distribution network damaged during last winter. It represents the bare minimum of equipment needed to return large areas of Armenia to electrical service. An extensive amount of additional similar equipment would be required to repair the entire system.

84

Table 9-1
"Decision 61" Materials

Item	Description	Qty	Units	Unit Cost	Extension	Mgf	Lead Time
1	**Transformers and Substations**						
	6 kV (Assume 630 kVA)	80	units	$15,100	$1,208,000	ABB	18 weeks ARO
	10 kV (Assume 630 kVA)	80	units	$13,200	$1,056,000	ABB	18 weeks ARO
	35 kV (Assume 630 kVA)	-	units				
2	**Direct Burial Cable, Pb or Al Sheathed**			$/MFt			
	10 kV, 3/c,185 sq.mm,Al	60	km	$6,707	$1,320,337	Okonite	18 weeks ARO
	10 kV, 3/c,120 sq.mm,Al	20	km	$5,684	$372,983	Okonite	18 weeks ARO
	10 kV, 3/c, 95 sq.mm,Al	80	km	$4,818	$1,264,626	Okonite	18 weeks ARO
	10 kV, 3/c, 70 sq.mm,Al	100	km	$3,516	$1,153,597	Okonite	18 weeks ARO
	1 kV, 4/c, 120 sq.mm,Al	20	km	$6,098	$400,150	Okonite	18 weeks ARO
	1 kV, 4/c, 95 sq.mm,Al	10	km	$4,107	$134,750	Okonite	18 weeks ARO
	1 kV, 4/c, 70 sq.mm,Al	10	km	$3,906	$128,156	Okonite	18 weeks ARO
3	**Connection or Pull Boxes**						
	CC-110 (10kV)	300	units	$770	$231,000	Hoffman	10 weeks ARO
	CC-100 (10kV)	100	units	$840	$84,000	Hoffman	10 weeks ARO
	CC-90 (10kV)	600	units	$630	$378,000	Hoffman	10 weeks ARO
	CY-60 (1kV)	750	units	$62	$46,500	Hoffman	10 weeks ARO
4	**Switchgear**						
	10 kV Switches	320	units	$10,000	$3,200,000	ABB	22 weeks ARO
	10 kV Fuses (per 3phase set for above)	640	units	$1,500	$960,000	ABB	22 weeks ARO
	400V Circuit Breakers in Switchboards	640	units				
5	**Diesel Generators**						
	30 kV	68	units	$13,300	$904,400	Onan	3 mo ARO
	60 kV	161	units	$17,600	$2,833,600	Onan	3 mo ARO
	100 kV	60	units	$22,300	$1,338,000	Onan	3 mo ARO
6	**Diesel Fuel**						
7	**Disconnectors**						
	TOTAL				$17,014,098		
				Diesel /Gen only =	$5,076,000		

Notes:

1. Add 20% for export packing and freight cost from USA to Armenia.
2. The price for the transformers is based on the assumption that a 630 kVA transformer is for a unit substation with a 400 V secondary and a primary voltage as listed.
3. The D/G are 220/380v, 3 ph., 50 Hz. They are skid mounted with 12 hr fuel tanks.

Table 9-2

LIST OF MATERIALS AND SPARE PARTS NEEDED FOR MAINTENANCE OF THE DISTRIBUTION NETWORK OF ARMENERGO FOR THE WINTER OF 1993/94

ITEM NO	DESCRIPTION	UNITS	QTY	CIS COST IN MILLION RUBLES			TOTAL CIS	TOTAL	T/R
				MAT'L	TRANS	TOTAL	US $	WESTERN	
1	Transformer Oil	t	800	480	70	550	$550,000	$600,000	T
2	EHV Circuit Breakers - 3 ph.								
	110kV - 1200A - 31.5kVA	ea.	3	13.5	1	14.5		$225,000	T
	220kV - 1200A - 31.5kVA	ea.	3	9	2.3	11.3		$435,000	T
	Total			22.5	3.3	25.8	$25,800	$660,000	
3	Direct burial cable, Pb sheathed								
	10kV, 3/c, 185 sq. mm, Al	km	100					$2,200,562	T
	10kV, 3/c, 240 sq. mm, Al	km	150					$3,553,314	T
	Total		250	800	315	1115	$1,115,000	$5,753,876	
4	1kV Direct Buried Cable, Pb or Al sheathed								
	1kV, 3/c, 50 sq. mm, & 1/c, 25sq.mm, Al	km	5					$55,022	T
	1kV, 3/c, 70sq. mm, & 1/c, 35sq.mm, Al	km	15					$189,723	T
	1kV, 3/c, 95 sq. mm, & 1/c, 50sq.mm, Al	km	35					$553,274	T
	1kV, 3/c, 120 sq. mm, & 1/c, 70sq.mm, Al	km	35					$1,037,302	T
	1kV, 3/c, 150 sq. mm, & 1/c, 70sq.mm, Al	km	35					$1,101,208	T
	1kV, 3/c, 185 sq. mm, & 1/c, 95sq.mm, Al	km	25					$580,736	T
	Total	km	150	375	95	470	$470,000	$3,517,264	
5	Transformers, 6, 10kV/0.4kV								
	160kV,6 or 10kV - 400V	unit	40					TBD	T
	250kV,6 or 10kV - 400V	unit	60					TBD	T
	400kV,6 or 10kV - 400V	unit	50					$660,000	T
	630kV,6 or 10kV - 400V	unit	50					$755,000	T
	Total	units	200	500	25	525	$525,000	$1,415,000	
6	Aluminium overhead conductors								
	35 sq. mm - 63lb/Mft	t	90					$661,500	T
	50 sq. mm - 99lb/Mft	t	60					$308,700	T
	Total	t	150	30	21	51	$51,000	$970,200	
7	ACRS Overhead Conductors								
	50 sq. mm - 130 lb/Mft	t	15					$55,973	T
	70 sq. mm - 170 lb/Mft	t	25					$75,554	T
	120 sq. mm - 300 lb/Mft	t	10					$20,874	T
	185 sq. mm - 527 lb/Mft	t	30					$41,297	T
	400 sq. mm	t	20					TBD	T
	Total	t	100	20	14	34	$34,000	$193,698	
8	Pole line Air Switch, 10kV, 3ph	units	400	35	3.5	38.5	$38,500	$800,000	R
9	Voltage Transformers								
	6kV	set	40	1	0.2	1.2		$44,000	R
	10kV	set	120	2.4	0.6	3		$192,000	R
	35kV	set	40	0.8	0.2	[illegible]		$148,000	R
	Total			4.2	1	5.2	$5,200	$384,000	
	Splices, 3 conductor, 10 kV, 185/240mm								
10	Cover	unit	4000	25	1.5	26.5	$26,500	TBD	R
11	Internals, wrap, oil, splices	unit	4000	60	5	65	$65,000	TBD	R

Table 9-2 (Cont'd)

LIST OF MATERIALS AND SPARE PARTS NEEDED FOR MAINTENANCE OF THE DISTRIBUTION NETWORK OF ARMENERGO FOR THE WINTER OF 1993/94

ITEM NO	DESCRIPTION	UNITS	QTY	CIS COST IN MILLION RUBLES MAT'L	TRANS	TOTAL	TOTAL CIS US $	TOTAL WESTERN	T/R
12	Indoor Cable Terminations, 10kV	unit	1000	14	2	16	$16,000	TBD	R
13	Compact Transformer Substations, 6-10kV/0.4kV, with disconnector, fuses, switches and meters								
	630 kVA	unit	30					*	T
	400kVA	unit	20					*	T
	Total		50	400	-	400	$400,000	*	
14	Metal Enclosed Switchgear 10kV, w/ disconnector, circuit breaker, CT, relay protection, and metering								
	K 104	t	30	11	3	14		*	
	K 59	t	30	11	3	14		*	
	K 67	t	30	11	3	14		*	
	Total			33	9	42	$42,000	*	
15	Cells for Distribution Substation								
	KCO-366, (6, 10kV)	unit	150	30	4	34		*	R
	KCO-272, (6, 10kV)	unit	100	50	7.5	57.5		*	R
	SCH0-70, (0.4kV)	unit	750	55	10	65		*	R
	Total			135	21.5	156.5	$156,500	*	
16	Fuses - 10kV	unit	2000	3	0.5	3.5	$3,500	*	R
17	Fuses - 0.4kV	unit	10000	2	0.5	2.5	$2,500	*	R
18	Insulators, 10 kV	unit	10000	2	0.5	2.5	$2,500	*	R
19	Disconnectors, 0.4 kV								
	250A		1500					*	T
	400A		1500					*	T
	Total	unit	3000	30	2	32	$32,000	*	
20	Insulated Conductors								
	16 sq. mm	km	10					TBD	T
	25 sq. mm	km	20					TBD	T
	35 sq. mm	km	20					TBD	T
	50 sq. mm	km	30					TBD	T
	75 sq. mm	km	30					TBD	T
	95 sq. mm	km	30					TBD	T
	120 sq. mm	km	10					TBD	T
	Total		150	30	4	34	$34,000	TBD	T
21	Wood for poles	cu. m	400	100	20	120	$120,000	*	R
	TOTAL			3100.7	614.3	3715	$3,715,000	$14,294,038	

Notes: 1. Entries with the designation "*" are considered OEM replacement parts and therefore should be purchased by the original supplier.

2. Western prices do not include transportation costs.

3. T = Tender (for ICB), R = Replacement Component (use OEM)

84

9.1.5 Option 6 — Ensure Minimum Gas Allocation

Natural gas is one of the most important fuels in the energy economy of Armenia. An extensive natural gas transport and distribution system was designed to import on the order of 7.5 billion m^3/year, or an average of 20.5 million m^3/day. Most households, industries, and the power sector depended heavily on natural gas as a convenient, low-cost, clean-burning fuel. This dependency was clearly evident when import levels of natural gas were significantly reduced: Households had no gas during most of last winter; industries had to drastically curtail their use of gas; and power plants had to resort to the far less desirable mazout to generate power.

The reduction in the amount of gas delivered to Armenia is a process that has continued over the last two years. Until the end of next winter, the GoA should maintain a minimum natural gas import level of 9 million m^3/day, generally allocated as follows:

- Population: 3 million m^3/day
- Industry: 4 million m^3/day
- Power plants: 2 million m^3/day

A target level of 9 million m^3/day is about 60 percent of the normal summer level of use, and about one-third of the normal winter level. This amount will provide the following benefits:

- Prior to the winter, the population will receive enough fuel to enable them to prepare for an expected energy emergency; and during the winter, a minimum amount of energy will be available for cooking.

- Most important, industries will be able to start production again, thereby helping Armenia begin to reestablish itself.

To put this target level in perspective, the 1993 quota of 3.6 billion m^3 is equivalent to about 9.9 million m^3/day. Thus, setting a target level of 9 million m^3/day merely reaffirms the level that the GoA attempted to reach at the beginning of 1993.

As soon as additional gas can be delivered to Armenia, the first course of action should be to fill the natural gas storage caverns, which can hold 210 million m^3. Although this storage capacity is normally used for operational purposes, it is recommended that under present conditions the existing caverns be filled to create an emergency supply for next winter similar to the emergency fuel supply for diesel, kerosene, and mazout. Thus, gas stored in the caverns would only be used under emergency conditions in which survival of the population is at stake. Last year the caverns were not used because of a lack of supplies.

To fill the caverns, special actions will be required to achieve the minimum suction pressure for the storage facility compressors (i.e., 8 atm). However, it should be noted that without additional gas supplies, over and above the current 1.5 to 2.5 million m^3/day, it is doubtful that the storage caverns can be filled and a dedicated emergency gas supply created.

9.1.6 Option 8 — Drill for Indigenous Oil and Gas

The existence of indigenous oil and gas has been documented for the past 40 years by substantial exploration and testing. Over 55 wells have been drilled and 2,250 km of seismic lines produced. Twelve promising geological structures have been identified — four of which were approved for production drilling just prior to the collapse of the USSR.

Based on this information, it seems appropriate for Armenia to undertake production. Public funding would be the preferred method of capitalizing such a program. However, due to the magnitude of the investment required, it is not expected that public funding will be available.

Therefore, the first recommendation under this option is to develop a prospectus describing the potential for oil and gas reservoirs in Armenia. This document would be provided to various foreign companies who would be potential joint venture partners. The second recommendation under this option is to initiate the drilling effort as soon as possible in order to extract some oil and gas for immediate internal consumption. Evaluations of the potential reservoirs indicate that both the oil and gas could be fired directly.

To interest a foreign company in such a venture, the present status of exploration, drilling, testing, transportation, infrastructure, licensing terms and conditions, and taxes must be presented in a comprehensive package. Not all geophysical and testing data need be presented, but the package should contain sufficient data describing production potential.

The package would be provided to potential partners and should include the kind of detail that will inform them of the nature of the field and the intentions of the GoA. The package would be advertised in various oil and gas journals, and technical presentations would be made to potential investor groups in an effort to contact all interested parties.

9.1.7 Option 10 — Clean and Upgrade Natural Gas Lines from Mozdok to Yerevan

The natural gas supply to Armenia originates in Turkmenistan. The pipeline traverses Kazakstan, continues to Mozdok, then travels through the Caucasus Mountains to the border of Armenia at Airoum. Throughout the length of the pipeline, many alternating high and low points occur. At the low points, the condensing liquids in the gas stream collect and impede efficient gas flow. Consequently, the gas delivery pressure in Armenia is adversely affected, resulting in much lower pressure at critical points than was called for in the design.

At present, some positive measures are being taken in Georgia to remedy the pressure loss. Provisions for pipeline cleaning have been implemented by the installation of pipe cleaning devices which are propelled by gas flow. Also, compressor station additions in both Georgia and Armenia are planned to overcome the resistance to gas flow.

Pipeline flow efficiency in the trans-Caucasus lines is approximately 35%. The efficiency rate would be greater than 90% if the line were liquid free, flowing close to design pressure. Additional pipe cleaning stations and some repairs in the pipeline from Mozdok to Yerevan are required to allow pipe cleaning on a regular basis.

Once the line is cleaned, any damage due to corrosion may be found and repaired. Additionally, the piping may be retested to restore the design pressure rating for future full pressure (55 atm) operation. This higher pressure capability will be required to accommodate the larger gas flows when Armenia returns to normal consumption rates.

9.1.8 Option 11 — Relocate and Upgrade Airoum Compressor Station

This long-term option restores the Airoum compressor station to service in a new, protected location. At present, the station is on the border with Georgia and Azerbijian. It is reported that this station has been extensively damaged by Azerbijian. The new location would be well within Armenia's borders, protected from attack. Operation of this station will be required at some future date to boost the gas flow into Armenia when normal consumption rates are resumed.

Designs are being prepared to install a new compressor station approximately 7 km south of the border. The compressors will be powered by three units of natural-gas-fired reciprocating engines because the original units were destroyed long ago. The Armenian Gas Design Institute indicates that the total price for the new station will be R 4.5 billion (January 1993).

9.1.9 Option 12 — Exploration of Indigenous Coal and Peat Deposits

At present no coal is commercially produced in Armenia, although coal exploration has occurred at various times in the past. The work was done by Russian geologists from institutes in Rostow and Artemovsk, starting as early as 1939; the latest work was done from 1973 to 1977. During World War II, some coal was mined by simple tunneling; 50,000 tons were taken out at Djadjur. It is also reported that besides the seven known coal deposits, some 50 outcrops have been observed and 50 large coalfields identified.

In early 1992, several actions were taken:

- The Department of Underground Resources, or geological department, developed a plan for simultaneous geological exploration of all known deposits. Exploration of peat and other deposits was also started. This broad approach was based on the rationale that it was not clear where to start first.

- Because Idjevan had the best prospect, it was selected for early exploitation. Responsibility for mining this deposit was given to the Ministry of Energy and Fuels (MEF), with the Department of Underground Resources doing all the geological work. MEF started at Idjevan with the development of an experimental surface mine.

Implementation of the plan for geological investigations started with the second quarter of 1992 and will continue until the second quarter of 1995. The first-year budget allocation for the program was R 16.4 million. The budget includes provision for materials, fuel, equipment, salaries, services, and administration, but, by and large, it is far from sufficient. Hence, the long time required for exploration.

In addition, most drilling equipment is very old and constantly being repaired. Because of the Ruble devaluation, it is expected that the budgets will increase accordingly, but these increases will not be used to buy new equipment. They will merely maintain the status quo.

At present, expedition teams are exploring each of the seven coal deposits, and two expedition teams began conducting peat investigations in the second quarter of 1993. The total number of people currently working in the field is approximately 150, including about 40 geologists and engineers. The largest team is at Idjevan with 20 to 25 people, plus 6 to 7 geologists and engineers and 10 to 15 people from MEF. It is expected that some 1 million tons of coal can be mined at Idjevan and made available for use prior to 1995.

Idjevan coal is a coking coal, with layers from 0.3 to 17 meters, to be mined by underground mining. The length of the coal seam is estimated at 2.5 km, the depth at 650 meters. The experimental mine is being developed where a multi-layered vertical seam, interspersed with rock, breaks the ground surface in thick forest. The total area allocated for this purpose is 1 ha - 0.4 ha for the access road and 0.6 ha for the surface mine. The plan is to excavate about 22,000 tons out of this mine. At today's prices, it costs about R 2,500 to R 3,000 per ton to mine this coal. (For comparison, underground coal from the Donets basin in the Ukraine costs about R 15,000 per ton FOB.) To date 2,000 tons have been mined at Idjevan. This coal has been used with good results in boilers at the Idjevan hospital and at a local school. At present the coal from Idjevan is planned for power generation. However, the quality is too good for this purpose. It could be used for metallurgical purposes, or for barter with steam coal from Ukraine (Donets) or Georgia. In a barter arrangement, it is

expected that 1 ton of Idjevan coal would equal 3 tons of Donets coal or 5 tons of Georgian coal.

Based on the above information, the following is concluded:

- Domestic coal and peat are potentially viable alternatives to imported fuels. Although it is too early to determine the extent to which domestic coal and peat can contribute to Armenia's energy needs, there is good reason to support the present exploration efforts, especially under current conditions. Every ton of domestically produced coal and peat replaces an equivalent amount of imported fuel at considerable foreign exchange savings. The startup of the experimental mine at Idjevan should ascertain the technical and economic feasibility of domestic coal production.

- The current exploration effort is handicapped by several factors, including the following: (1) Insufficient budgets to execute the necessary geological exploratory work as fast as possible; (2) lack of adequate equipment and materials to support the geological teams currently in the field; (3) lack of a coal research infrastructure — for example, adequate laboratory facilities in which to perform proximate and ultimate analyses of coal. On the other hand, as demonstrated above, a cadre of highly qualified professional geologists and engineers is available to do the necessary work.

- Coal, imported from Russia, was used in Armenia in moderate quantities — about 300,000 to 400,000 tons. Since these coal imports used to be transported by rail from Russia through Georgia, shipments have come to a halt because of internal strife in the Abkhazia region of Georgia. Initial domestic production of coal can help to replace these imports and alleviate the need for alternative liquid fuels or wood. Thus, there is an immediate use for domestic coal as well as a potential future use in power plants.

In view of the above conclusions, two energy-supply-oriented actions are recommended - acceleration of current geological investigations and development of a mining plan to expedite both surface and underground mining at Idjevan.

Acceleration of Current Geological Investigations

This action is aimed at reducing by half the time necessary for geological exploration. Thus, instead of finishing the program in 1995, it is expected that the necessary field work can be completed by 1994. Based on discussions with the GoA, it is recommended to procure four sets of equipment and materials to accelerate the exploratory work at the four most promising deposits:

- Idjevan
- Djermanis
- Shamout
- Djadjur

The minimum amount of equipment necessary to accelerate exploration of these four coal deposits is listed in Table 9-3.

Table 9-3
Estimate of Minimum Equipment Necessary for Coal Exploration

Equipment Description	Source	Est. Cost (U.S.$)
Coal-Testing Equipment (including drying oven, ashing oven, and calorimeter)	U.S.	$100,000
Exploration Drill (similar to Acker Model CS-2000 with CPWL wireline tools)	U.S.	$600,000
100,000 Liters of Diesel Fuel	Armenia	$50,000
10,000 Liters of Gasoline	Armenia	$8,000
(2) Housing	Armenia	$4,000
(1) Water Truck	Armenia	$2,000
(2) Storage Tanks	Armenia	$2,000
(1) Bulldozer	Armenia	$4,000
(1) Car	Armenia	$3,000
Digital Electric Logging System (includes gamma, gamma-gamma, resistivity, and caliper)	U.S.	$110,000
Contingency		$17,000
Total		$900,000

Development of a Mining Plan to Accelerate Surface and Underground Mining at Idjevan

This recommendation recognizes the well-known fact that in most coal mining situations, production can be greatly accelerated by relatively simple means. Except for large-scale, commercial surface and underground mining operations, most mining ventures start with simple excavation methods, using simple, available equipment such as small bulldozers. The objective of this recommendation is to provide technical assistance to the GoA to develop a

plan for such small-scale mining to accelerate development and production of Idjevan coal. The costs associated with this recommendation would be covered by technical assistance already available to the GoA.

9.1.10 Option 13 — Provide Technical Assistance for Contract Negotiations on Southern Pipeline

Before the dissolution of the Soviet Union, Armenia was assured of a supply of natural gas at controlled prices. The situation has changed. Neither the price nor the quantity of gas is known from month to month, although the price is approaching the world market value.

In the attempt to diversify their gas supply, the GoA considers the southern border to be a gas-rich option, but initial attempts to explore this area have met with limited success. This option would provide for assistance in contract negotiations with Iran for the purchase of gas and refined oil products and the construction of a pipeline to transport these products. This assistance would guide Armenia through the vagaries of international energy trading — an area not well understood by larger nations with considerably more experience — and provide advice in the area of free market borrowing practices for pipeline projects.

9.1.11 Option 14 — Construct a Southern Pipeline for Both Gas and Liquid Products

This option is intended to address the actual construction of a pair of pipelines from Iran. Since the need for a gas pipeline from the south to promote energy diversity is understood, Armenia should also investigate the advantages of constructing a parallel liquids pipeline. This set of lines could transport a good measure of Armenia's gas requirement and also gasoline, diesel, kerosene and jet fuel. Figure 9-1 presents a schematic of the proposed gas and liquid fuel pipelines.

It appears that the installation of a gas pipeline from the south would benefit Armenia both as a consumer and as a gas transmission partner for marketing southern gas in other CIS countries. Though the cost of construction of gas transmission pipelines is a considerable barrier at this time, it may be possible to implement long-term barter agreements to complete such a project. The long-term health of the nation could be enhanced by such leveraging of the price of gas.

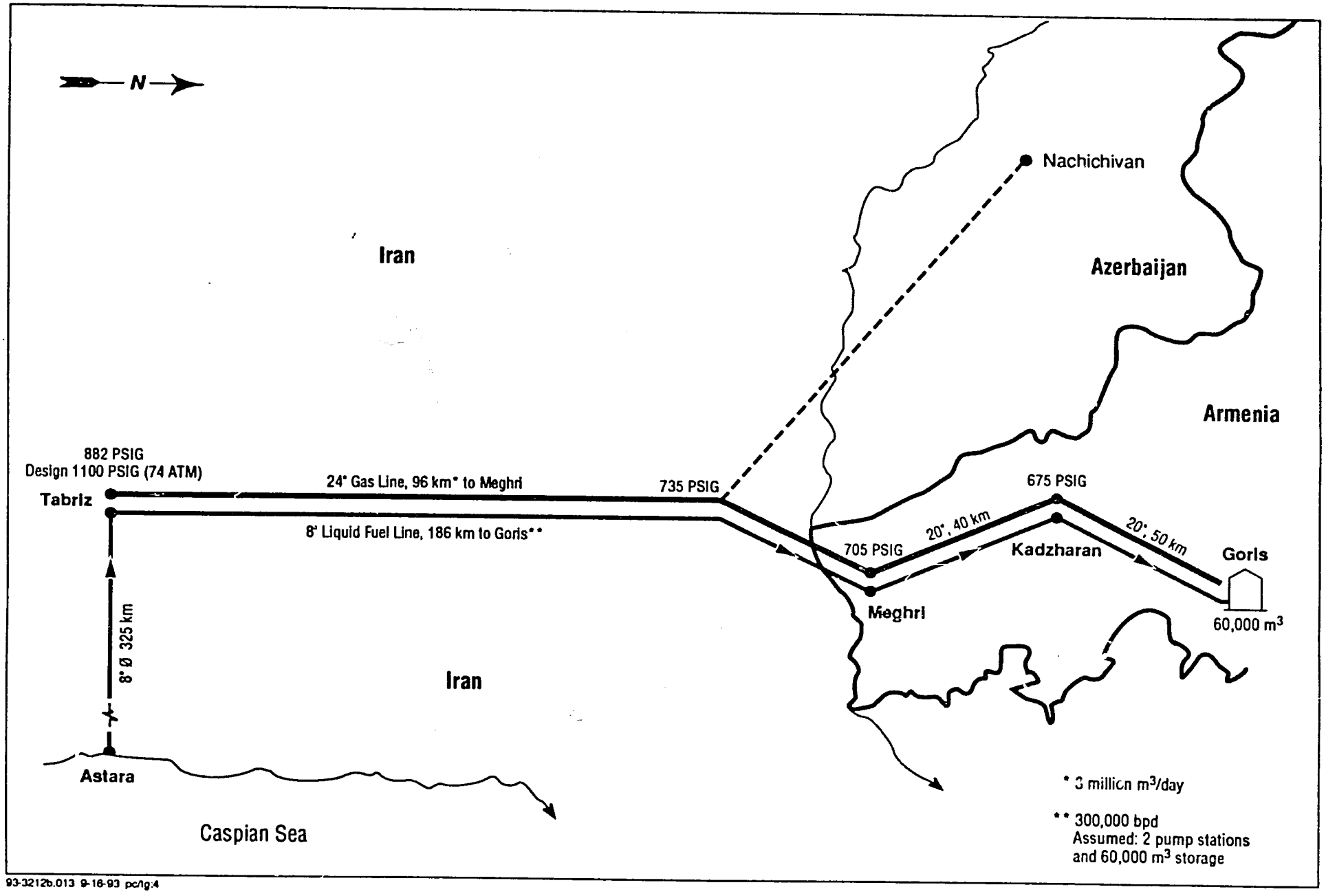

93-3212b.013 9-16-93 pc/lg:4

Figure 9-1 Schematic of Southern Gas and Liquid Fuel Pipelines

In normal circumstances, Armenia requires over 1.5 million tons of liquid fuels per year. This equates to approximately 30,000 bbl/day and would completely load an 8-inch pipeline. If agreements could be reached to lay parallel pipelines over the same right-of-way, economies in costs could be achieved. The current problems in Armenia would make pipeline construction difficult at present, but this option should be considered as a potential means of assuring Armenia a position in the world economy.

9.1.12 Option 15 — Increase Long-Term Fuels Storage Capacity (Study)

Storage capacity and the need to store fuels are important issues for the GoA. Under current conditions, the ability to lessen the impact of supply interruptions through increased storage is crucial to the ability to meet energy needs. On the other hand, the sharply reduced energy supplies coming into the country have made it impossible to maintain even minimum storage levels. As a result, there is virtually no fuel stored in the country.

Motivated by the energy crisis, the GoA intends to implement a policy on fuel storage, calling for three different types of storage:

- *Operational Storage.* This type of storage is needed to accommodate the difference between the amount and time of delivery and the characteristics (amount and time) of fuel consumption. In the case of natural gas, and under normal circumstances, as much as 12% of annual consumption may be required for operational storage.

- *Strategic Reserve.* This type of storage is created to maintain a long-term reserve for strategic purposes. In general, it is estimated that the strategic reserve should be around 10 to 15% of annual consumption.

- *Emergency Reserve.* This type of storage should be maintained to accommodate supply interruptions stemming from events in Armenia such as the destruction of the gas pipeline or the railroad bridge. Statistics show that this type of storage may require 5 to 6% of annual consumption.

The GoA plans to set aside about 25% of annual consumption to meet these three types of storage needs.

9.1.13 Option 16 — Install LPG Recovery Plant for Indigenous Gas

Armenia has the potential for production of high pressure, indigenous natural gas that has been shown to contain commercial concentrations of valuable helium and nitrogen. The test well that provided this information shows a potential for producing gas at well over 600 atm.

In the event that this resource produces substantial quantities of gas (approximately 368,000 m^3/day), it would be prudent to consider utilizing Armenia's inactive LNG facility to strip the valuable components as well as produce LNG. With such a high inlet pressure to the LNG facility, the economical operation of the plant would be assured. The valuable products could be fractionated while saving the LNG for storage and winter use. Additionally, LPG could be removed in the early expansion/cooling stages of the modified LNG plant and stored in the existing LPG salt caverns for winter peaking service.

9.1.14 Option 18 — Procure and Install Gas Meters — Develop Rate Collection Program

In 1982, Moscow requested that an earlier study of Yerevan's gas distribution system be evaluated and revised to accommodate the increase in population. There were very few responses; however, one study resulting from the request concluded that a savings of up to 30% of domestic gas use could be expected if customers were metered. This conclusion is consistent with western experience where the tariff charged for energy use is collected.

This option would provide for the purchase and installation of gas meters in residences and commercial facilities. Such a program would require approximately four years to complete. It would include an evaluation of the cost of the gas in order to determine the appropriate price to charge residential and commercial customers.

9.1.15 Option 19 — Optimize Gas Distribution System

As indicated in Option 18 above, an evaluation of Yerevan's gas distribution system was made in 1982. In addition to recommending the use of gas meters, the report expressed concern about the potential for overpressure in the domestic gas system. Overpressure is created by both corrosion in the piping and the high pressures required to provide service in congested, new urban developments. The existing system may be insufficient to accommodate the present and future population.

Therefore, it would be prudent to evaluate the gas distribution system with respect to current demographics. Such a study would provide plans to correct current bottlenecks in the low-pressure delivery system. The plans would include modifications to modernize the system such as using plastic mains (where practical), installing gas meters, and incorporating preventive maintenance facilities. Such ideas should be developed and cost estimates prepared to determine the potential payback that would justify the work.

97

9.1.16 Option 20 — Procure Additional Fuel Distribution Equipment

ARMOIL has expressed a need for fuel distribution and safety equipment to facilitate fuel unloading. Their equipment list, shown in Table 9-4, contains a variety of items necessary to assure the efficient transfer of fuels as well as personnel and facility safety.

Table 9-4
Equipment Required for Fuel Distribution

Quantity	Description of Equipment	Unit Price (U.S.$)	Total Price (U.S.$)
10 ea.	Light Oil Centrifugal Pumps with Electric Motors	$22,000	$220,000
5 ea.	Mazout Pumps with Motors	$22,000	$110,000
20 ea.	Tank Trucks	$51,000	$1,020,000
30 ea.	Fuel Oil Pumps with Motors	$16,000	$480,000
4 ea.	Fire Trucks	$41,000	$164,000
4 ea.	Tank Cleanup Equipment	$9,000	$36,000
10 ea.	Side Grab Barrel Elevators	$1,900	$19,000
1 ea.	Ladder Truck	$54,000	$54,000
	Total		$2,103,000

9.1.17 Option 21 — Systematic Testing of High and Low Pressure Gas Distribution Piping

Armenia has a high-pressure (55 atm) loop system designed to deliver gas throughout the country. There are "City Gate" metering and regulating stations, and metering and regulating stations for industry. Downstream of these metering and regulating stations, the pressure is reduced by order of magnitude. The pressures are reduced another order of magnitude prior to servicing the residences. All of the piping systems were originally designed to accommodate a pressure one and one-half times the working pressure.

Due to extreme lows in gas volume and pressure for several years, the systems have not even approached design pressures and flow rates. Additionally, some systems have been isolated for years. In the interest of public safety, both the high-pressure and the low-pressure systems must be cleaned and inspected to prepare for the increased flows that may be expected as the economy recovers. This essential testing would be similar to that recommended for the main distribution piping of Option 10, except on a smaller scale; but it would make use of electronic devices that would be traversed through the system.

9.1.18 Option 23 — Install an LPG Recovery Plant for the Southern Pipeline (Study)

As indicated in a previous option, Armenia is at present negotiating a natural gas agreement with Iran. This nation has a high-pressure pipeline that extends northward to a location near the southern border of Armenia. Armenia may desire to extend the pipeline to its border in order to receive the gas. The delivered gas pressure is significantly higher that the Armenian pipeline design and would therefore require pressure reduction at some point near the border. As the gas pressure is reduced from the supply pressure to a pressure acceptable to the Armenian pipeline, the gas would be chilled significantly. The chilling would cause freezing around the pipeline and create an unsafe condition for the piping material. Additionally, natural gas liquids would condense and impede the flow of the gas. If, at this point, a modern turbo-expander LPG/natural gas liquids recovery plant were available, the pressure reduction would produce additional benefits as well as eliminate the ill effects.

9.2 COST ESTIMATE

Table 9-5 presents a summary cost evaluation of the foregoing energy options.

9.3 OPTIONS SCHEDULE

Figure 9-2 presents a preliminary schedule for the viable emergency and near-term options discussed in Section 9.1.

Table 9-5
COST EVALUATION OF ENERGY OPTIONS
SUMMARY

MATERIALS		MATERIAL		LABOR	FREIGHT	TOTAL COST		
Item	Quantity	WESTERN	CIS	Cost	Cost	WESTERN	CIS	IN-COUNTRY
1. Purchase dedicated fuel and stoves for survival								
a) Procure kerosene - from Russia through Batumi	18,750,000	$2,600,000	$3,500,000	Included	$102,500	$3,000,000	$3,602,500	$0
b) Fabricate stoves for heating using coal or kerosene	125,000 ea	$0	$600,000	$150,000	$18,000	$0	$0	$768,000
c) Secure storage of materials	40 persons	$0	N/A	$6,400	N/A	$0	$0	$6,400
1a. Purchase dedicated diesel fuel								
a) Procure diesel fuel - from Russian through Batumi	13,000 ton	$2,210,000	$1,802,667	N/A	$86,667	$2,535,000	$1,839,333	$0
b) Secure storage for fuel	40 persons	$0	N/A	$6,400	N/A	$0	$0	$6,400
2. Purchase dedicated supplies of mazout								
a) Purchase mazout - from Russia through Batumi	19,200 ton	$1,344,000	$1,331,200	Included	$128,000	N/A	$1,459,200	$0
3. Implement emergency electricity supply to critical facilities (Decision 61)								
a) Purchase and install dedicated electrical circuits	See Table 9-2	$11,938,100	$7,402,133	$1,909,900	$222,064	$14,325,720	$7,624,197	$1,908,900
b) Purchase and install dedicated diesel generators (70% ex-country)	289 ea	$5,076,000	$3,540,000	$424,200	$106,200	$6,091,200	$3,646,200	$424,200
c) Purchase and store dedicated diesel fuel	15,000 ton	$2,550,000	$2,080,000	Included in 1a above	$100,000	$2,925,000	$2,180,000	$0

93-3212c.009d

Table 9-5 (Cont'd)
COST EVALUATION OF ENERGY OPTIONS

SUMMARY

MATERIALS		MATERIAL		LABOR	FREIGHT	TOTAL COST		
Item	Quantity	WESTERN	CIS	Cost	Cost	WESTERN	CIS	IN-COUNTRY
4. Procure and install electrical equipment for repair of distribution network (Yerevan)								
a) Procure electrical equipment	See Table 9-3	$55,022,200	$3,400,000	N/A	$102,000	$66,026,640	$3,502,000	$0
b) Install / replace equipment	500 persons	N/A	N/A	$80,000	N/A	$0	$0	$80,000
~~5. Implement joint security measures for rail and pipeline through Georgia~~								
~~a) Negotiate with Georgia~~								
~~b) Provide military personnel~~								
6. Ensure minimum gas allocation								
b) Provide payment for gas shipment	2.0 BCM/yr	N/A	$100,000,000	$0	$32,520,000	$0	$132,520,000	$0
~~7. Purchase dedicated LPG~~								
~~a) Purchase LPG~~								

93-3212c.009d

Table 9-5 (Cont'd)
COST EVALUATION OF ENERGY OPTIONS
SUMMARY

MATERIALS		MATERIAL		LABOR	FREIGHT	TOTAL COST		
Item	Quantity	WESTERN	CIS	Cost	Cost	WESTERN	CIS	IN-COUNTRY
8. Evaluate drilling data for potential commercialization								
a) Initial study of available data to develop a prospectus		N/A		$360,000		$345,000	$0	$15,000
8a. Drill for indigenous oil and gas								
a) Mobilize and drill five (5) wells Shallow depth (3000m)		$13,529,000	$0	$943,000	$1,920,000	$16,087,000	$0	$305,000
b) Mobilize and drill five (5) wells greater depth (4500m)		$31,713,000	$0	$1,318,000	$1,920,000	$34,573,000	$0	$378,000
~~9. Re-wash existing salt caverns~~								
~~a) Liner for salt settling pond~~								
~~b) Washing operation~~								
10. Clean and upgrade natural gas lines from Mozdok (Russia) to Yerevan								
a) Install pig traps and repair pipe		$1,728,000	$518,400	$103,680	Included	$1,728,000	$518,400	$103,680
b) Clean and "pig" (inspect) lines		$288,000	$96,000	$86,400	Included	$288,000	$96,000	$86,400
c) Employ "smart pigs" to evaluate pipeline		$1,440,000	Western Supply only	$172,800	Included	$1,440,000	Western Supply only	$172,800
d) Repair damage discovered in c) above		$1,392,000	$464,000	$417,600	Included	$1,392,000	$464,000	$417,600
e) Hydrostatic test repaired lines		$366,000	$549,000	$73,200	Included	$366,000	$549,000	$73,200

93-3212c.009d

Table 9-5 (Cont'd)
COST EVALUATION OF ENERGY OPTIONS
SUMMARY

MATERIALS		MATERIAL		LABOR	FREIGHT	TOTAL COST		
Item	Quantity	WESTERN	CIS	Cost	Cost	WESTERN	CIS	IN-COUNTRY
11. Relocate and upgrade Aircum compressor station								
a) Relocate compression station		$12,000,000	$3,400,000	$1,000,000	$102,000	$13,200,000	$3,502,000	$1,000,000
12. Indigenous coal and peat deposit								
a) Provide material and equipment to accelerate geological investigation	See Table 9-4	$1,200,000	$400,000	N/A	$12,000	$1,219,000	$412,000	$0
b) Determine mining plan for accelerated production of Idjevan	2 persons	N/A	N/A	$115,000	N/A	$100,000	$0	$15,000
13. Provide technical assistance for contract negotiations on Southern pipeline								
a) Provide consultants	2 persons	N/A	N/A	$600,000	N/A	$600,000	N/A	N/A
14. Construct Southern pipeline for both gas and liquid products								
a) Prepare feasibility study		N/A	N/A	$1,300,000	N/A	$1,200,000	N/A	$100,000
b) Design and construct gas line - Tabriz to Meghri (119 km)	15,240 ton	$60,380,000	$31,000,000	$4,114,800	Included	$62,025,920	$31,000,000	$2,468,880
c) Design and construction liquid pipeline from Astra to Goris (419km)	19,220 ton	$61,376,000	N/A	$51,500,000	Included	$109,526,000	N/A	$3,350,000

Table 9-5 (Cont'd)
COST EVALUATION OF ENERGY OPTIONS

SUMMARY

MATERIALS		MATERIAL		LABOR	FREIGHT	TOTAL COST		
Item	Quantity	WESTERN	CIS	Cost	Cost	WESTERN	CIS	IN-COUNTRY
15. Increase long term fuels storage capacity (STUDY)								
a) Develop a plan for emergency, strategic and operational storage of liquid fuels	1 ea	N/A		$175,000	N/A	$150,000	$0	$25,000
16. Install LPG recovery plant for indigenous gas								
a) Preliminary evaluation of capability		N/A	N/A	$150,000	N/A	$125,000	N/A	$25,000
~~17. Add LPG storage capacity~~								
~~a) Drill and wash caverns~~								
18. Procure and install gas meters - develop rate collection program								
a) Gas meter procurement	350,000 ea	$10,500,000	$19,950,000	Included	N/A	$11,340,000	$0	$19,950,000
b) Installation	350,000 ea	$0	$3,500,000	$23,333	N/A	$0	$0	$3,523,333
c) Rate determination and collection	1 ea	N/A	N/A	$850,000	N/A	$750,000	N/A	$100,000

Table 9-5 (Cont'd)
COST EVALUATION OF ENERGY OPTIONS
SUMMARY

MATERIALS		MATERIAL		LABOR	FREIGHT	TOTAL COST		
Item	Quantity	WESTERN	CIS	Cost	Cost	WESTERN	CIS	IN-COUNTRY
19. Optimize gas distribution system								
a) Review and evaluate		$0	$0	$200,000	N/A	$185,000	$0	$15,000
b) Develop optimization plan		$0	$0	$550,000	N/A	$535,000	$0	$15,000
20. Procure additional fuel distribution equipment								
a) Liquid fuel loading/ unloading equipment	See Table 9-5	$2,103,000	$701,000	$0	$420,600	$2,523,600	$750,070	$0
21. Systematic testing of high and low pressure gas distribution piping								
a) Clean and "pig" (inspect) lines		$179,600	$59,867	$53,880	$1,796	$179,600	$61,663	$53,880
b) Employ "smart pigs" to evaluate pipeline		$2,930,000	Western Cost Only	$351,600	N/A	$2,930,000	N/A	$351,600
c) Repair damage discovered in c) above		$1,158,000	$386,000	$347,400	$11,580	$1,158,000	$397,580	$347,400
d) Hydrostatic test repaired lines		$676,200	$225,400	$540,960	$6,762	$676,200	$232,162	$540,960
e) Test Yerevan distribution system		$3,500,000	$1,166,667	$85,000	$35,000	$3,500,000	$1,201,667	$85,000
Total		$8,443,800	$1,837,933	$1,378,840	$55,138	$8,443,800	$1,893,071	$1,378,840
~~22. Construct new natural gas storage caverns~~								
~~a) Drill and wash caverns~~								
23. Install LPG recovery plant for Southern pipeline (STUDY)								
a) Prepare design study		N/A	N/A	$42,000	N/A	$32,000	$0	$10,000

93-3212c.009d

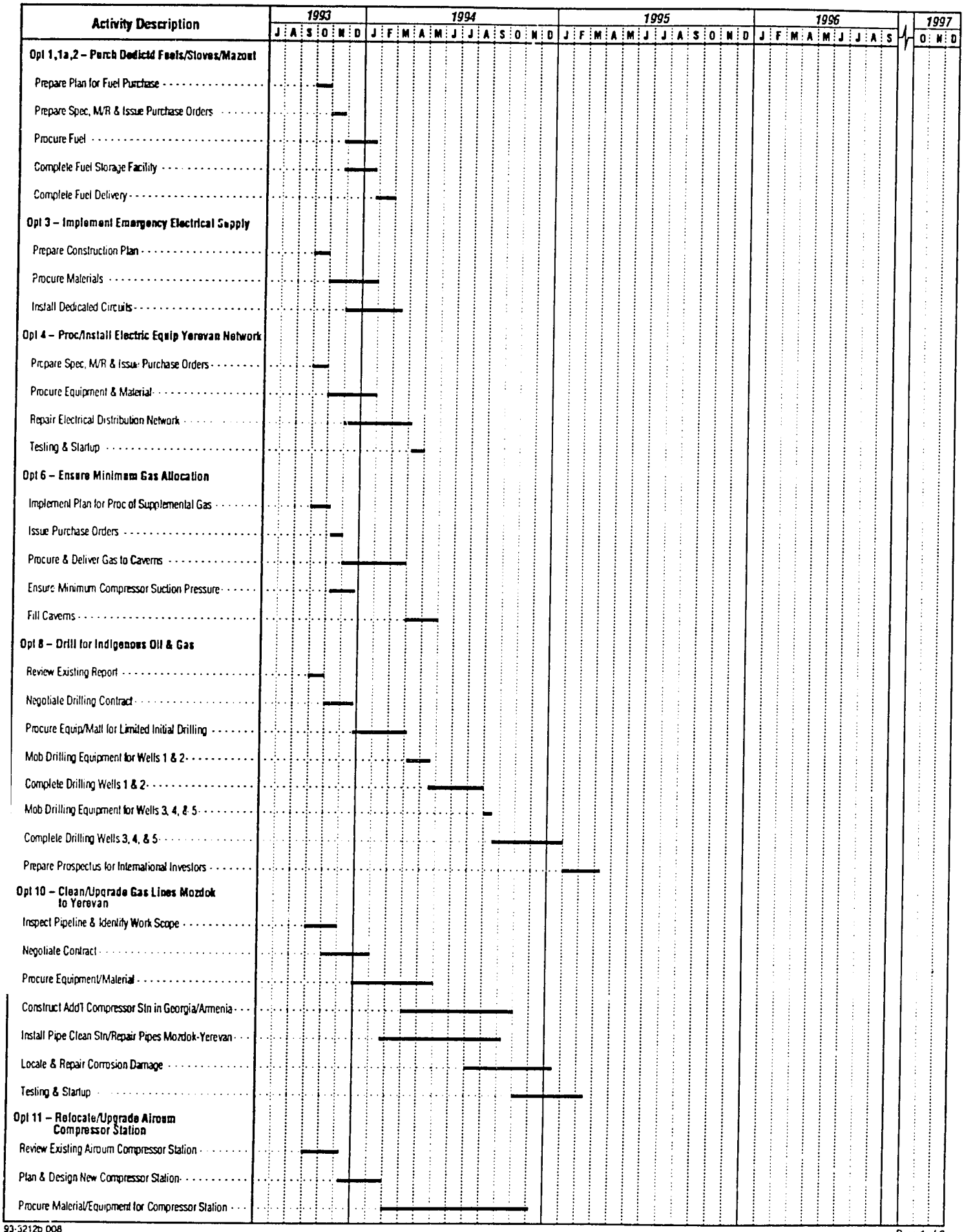

93-3212b 008
9-20-93 lg/vk.5

Page 1 of 2

Figure 9-2 Energy Supply Options Schedule

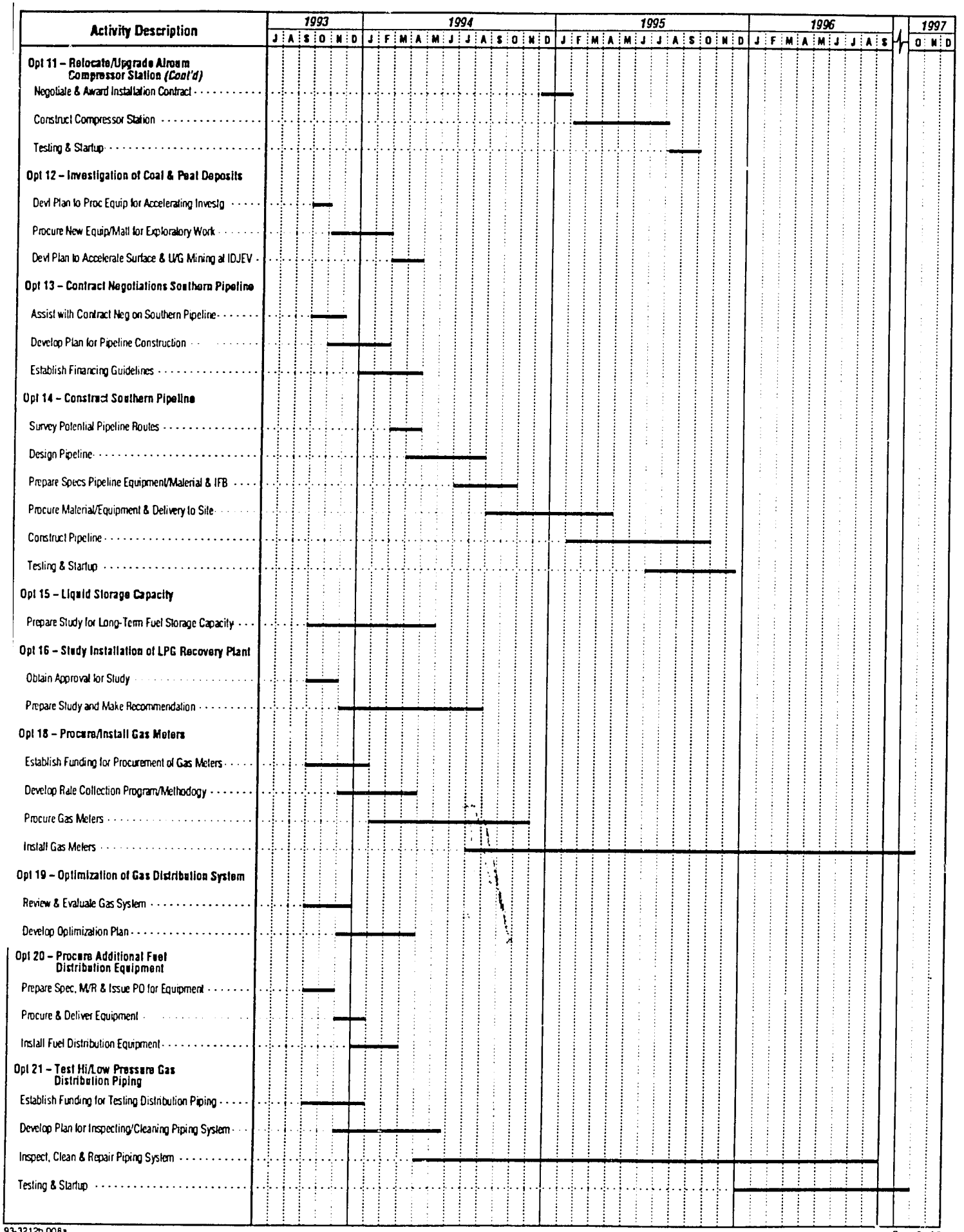

93-3212b 008a
9-20-93 tg/vk 5

Page 2 of 2

Figure 9-2 Energy Supply Options Schedule (Cont'd)