PN ABS-001
89285

NATURAL RESOURCES MANAGEMENT PROJECT

BAPPENAS – Ministry of Forestry
Assisted by
USAID

POLICY TOWARDS PROTECTED AREAS IN INDONESIA
FINAL REPORT

Associates in Rural Development
for
Office of Agro–Enterprise and Environment
USAID – Jakarta

AID Contract No. 497 – 0362

April 1994

REPORT NO. 38

Table of Contents

Preface i
Executive Summary ii
Acronyms iv

I. Introduction 1
1.1 Biodiversity Assets 1
1.2 Protected Areas Officially Set Aside 1
1.3 Definition of Protected Areas 2
1.4 Indonesia's International Commitments in Conservation 3
1.5 Implementation of Conservation Area Programs 3
1.6 Need for Policy Review 3

II. Historical Development of Protected Areas in Indonesia 5

III. Present Framework of Protected Area Management 8
3.1 Present Policy 8
3.2 Institutional Framework 10
3.3. Legal Framework 12

IV. Assessment of Management and Management Policy 16
4.1 Policy 16
4.2 Institutional Aspects 18
4.2.1 Administrative Structure 18
4.2.2 Coordinating Mechanisms 20
4.2.3 Role of Local Communities and NGOs 22
4.3 Legal Framework 24

V. Conclusions and Recommendations 28
5.1 Major Lessons for the Future 29
5.2 Elements of an Implementation Strategy 38

Appendices:

Appendix 1: Consultant's TOR.

Appendix 2: Major conservation projects in Indonesia supported by donors in Indonesia.

Appendix 3: Nature conservation and recreation area, 1982.

Appendix 4: a. Conservation area by categories, 1992/93.
b. Protection forest, 1990/1.

Appendix 5: Development of PHPA budget and area under PHPA jurisdiction.

Appendix 6: Conservation policy objectives in the First 25-Year Plan and Repelita V.

Appendix 7: Recreational forests managed by private enterprises, 1992/93.

Appendix 8: List of Agencies playing a role in marine and coastal management

Appendix 9: Case Studies:

#1 Social Forestry Development Project, Sanggau
#2 Resource Rights Program
#3 Java Social Forestry Program
#4 National Integrated Pest Management Project
#5 Arfak Nature Conservation Area
#6 Kerinci Seblat National Park Integrated Conservation and Deveopment Project
#7 Keluru Village Forest Program
#8 Rinjani National Park
#9 Wasur National Park
#10 Kayan-Mentarang Nature Reserve
#11 Biodiversity Conservation Project, Flores and Siberut
#12 NRMP - Bunaken Marine National Park
#13 NRMP - Bukit Baka - Bukit Raya National Park
#14 Dumoga Bone National Park
#15 Gunung Leuser National Park
#16 Kutai National Park
#17 Mangrove Conservation Project
#18 Kepulauan Seribu Marine National Park
#19 Mapping Community-managed Territories in Indonesian Forests
#20 Integrated Management Plan for Coastal Resources of Segara Anakan Lagoon
#21 Cyclops Mountain Conservation Area

Appendix 10: Bibliography

Preface

This report is one of a number of reports produced under the Government of Indonesia's Natural Resources Management Project (NRM) that is assisted by the United States Agency for International Development (USAID).

The NRM Project, working with the Indonesian National Planning Board (BAPPENAS) and the Department of Forestry (Departemen Kehutanan), provides through a specially established project Policy Secretariat advice to BAPPENAS on natural resource issues relating to long term and short-term national planning. In addition, working with the Department of Forestry the NRM project carries out field activities in two pilot project areas one in West/Central Kalimantan and one in North Sulawesi including the preparation of management plans for the Bukit Baka - Bukit Raya National Park in Kalimantan and the Bunaken National Park in North Sulawesi. Each report addresses an aspect of the planned NRM project activities that are agreed on and laid out in an annual NRM Implementation Plan and each report aims at providing specific recommendations for future work in the area addressed.

This report .....

Executive Summary

Indonesia's protected area system is one of the most comprehensive in Southeast Asia, if not in Asia. The strategy the Government of Indonesia (GOI) pursued to establish this system was to first set aside a large portion of the country (by now about 18 %) as protected area rather than starting with a time-consuming research program gathering data on the genetic resources and the biodiversity assets of its forests, marine and coastal areas. With such a step the GOI clearly documented its political commitment to protection and conservation. However impressive this development may be on paper, as yet little protection is actually provided in the field. The objective of Indonesia's natural resource policy today therefore is to provide concrete protection. The country is now looking for practical solutions "on the ground" and has become increasingly open to new approaches and experimentation.

The array of innovative projects in resource management in Indonesia, which address most of the problems in conservation identified and laid down in Indonesia's Biodiversity Action Plan (1993), is impressive. It is premature, however, to draw generic conclusions as a basis for a policy on protected areas that focuses on implementation at regional level. While more empirical evidence seems to be needed, certain elements of such a policy are beginning to take shape.

While many things are in flux, the purpose of the present paper is primarily to draw attention of decisionmakers to ongoing approaches in protected area management in Indonesia and thereby to stimulate dialogue and discussion, particularly on institutional issues which are likely to be focal in a policy towards protected areas.

On the basis of an analysis of over 20 ongoing natural resource management projects in Indonesia mostly focusing on protected areas, a series of lessons have been drawn that are applicable for the design of Indonesia's policy towards protected areas. The major policy implications have been grouped into the following areas:

(1) Integration of conservation into the Indonesian development process.

(2) New role of PHPA (Directorate General of Forest Protection & Nature Conservation)

(3) Institutional development.

(4) Local communities.

(5) Private sector involvement.

(6) Marine and coastal areas.

(7) Traditional land use rights.

(8) Independent monitoring and evaluation.

Drawing upon these findings elements of an implementation strategy are suggested that lend themselves for immediate implementation and which, above all, support the learning process of those involved in the issue of protection and conservation at the local level.

Acronyms

BAPPEDA I	Provincial Planning Board
BAPPEDA II	District Planning Board
BAPPENAS	National Development Planning Agency
Biphut	Balai Inventorisasi dan Perpetaan Hutan (Provincial Unit for Inventory and Land Use Planning)
BPN	Badan Pertanahan Nasional
Bupati	Regent
ICDP	Integrated Conservation and Development Project
INTAG	Directorate General for Forest Inventory and Land Use Planning
IPAS	Integrated Protected Area System
LIPI	Indonesian Institute of Sciences
LKMD/LMD	Village level administrative body
MoF	Ministry of Forestry
ODA	Overseas Development Agency
PHPA	Directorate General of Forest Protection and Nature Conservation
SBKSDA	Sub Office of Natural resource Conservation
WWF	World Wide Fund for Nature

I. INTRODUCTION

1.1 Biodiversity assets

With its wide range of natural habitats, species richness and generic varieties within those species Indonesia is recognized as a major center for biodiversity in the world. On account of its island character local species have evolved that are locationally unique or "endemic".

Indonesia's biological diversity is the country's greatest natural wealth. Yet it has not been adequately inventoried or described by science. The potential economic values of its forests and marine gene pools and their species diversity and endemism are still largely unknown. It is assumed, however, that its wild and natural areas contain a wealth of genetic resources which may be important sources of natural chemicals, or possess genetic characteristics that can be used in breeding. Moreover, the potential of these natural areas to generate revenues from ecotourism has not been realized.

The Government of Indonesia (GOI) recognizes that many sectors of the nation's economy are largely dependent on the diversity of natural ecosystems and the environmental functions they protect.

1.2 Protected Areas officially set aside

To ensure the sustainability of these functions and future opportunities for recreation as well as to maintain genetic pools for future economic exploitation, the GOI has already set aside about 16.2 million ha (=8.5% of Indonesia's land area) for conservation[1] and 18.0 million ha (9.5 %) as protection forest[2] of the country's land area and 2.5 million ha of its seas for conservation purposes, thereby attempting to maintain the ecological service functions of intact ecosystems.

---

[1] BAPPENAS 1993, p.23. According to an IUCN classification 17.8 million ha (= 9.3% of the total land area of Indonesia) had been classified as protected in 1990. Even this figure which does not include protection forests is one of the highest in Asia, only Bhutan (19.7%) and Sri Lanka (11.9.%) had more land set aside for conservation (World Resources Institute, World Resources 1992-93, Washington 1993, p.299).

[2] Data on protection forests differ according to source. Here more conservative figures mentioned in a recent article were followed (Economic & Business Review Indonesia No.78, Oct.9, 1993, p.32). The data mentioned in the Biodiversity Action Plan for Indonesia (BAPPENAS 1993) of 30 million hectares would amount to over 15 % of the country set aside for protection forests alone.

1.3 Definition of Protected Areas

Protection is one of the major functions of the Ministry of Forestry (MoF). It is responsible for the protection of nature (samples of ecosystems and diversity of plant and animal species) and of genetic resources both terrestrial and marine and for the protection of forests in watershed areas to preserve soil cover and the yield of water.

Hence the term "protected areas" as applied in Indonesia and in this study comprises reserves and protection forests as well as marine and coastal protected areas[3] (MoF 1991, vol.1,p. 40). It consists of:

I. Reserves

(a) Sanctuary Reserve
Nature Reserve (Cagar Alam) (marine + terrestrial)
Wildlife Sanctuary (Suaka Margasatwa) (terrestrial)

(b) Nature Conservation Areas
National Parks (Taman Nasional) (marine + terrestrial)
Grand Forest Parks (Taman Hutan Raya) (terrestrial)
Nature Recreation Forest Park Area (Taman Wisata Alam) (marine + terrestrial)

II. Protection Forest (Hutan Lindung)

This category comprises all land over 40% slope and not earmarked for conservation whose primary function is to protect watershed areas. Although protection forest accounts for over 50% of the area set aside as protected area, the focus of Indonesia's efforts has clearly been on conservation. This is also reflected in the present analysis. It is recognized, however, that protection forests need far greater attention in the future and that the recommendations made here apply to all forms of protected areas.

III. Hunting Parks (Taman Buru)

Such reserves are of low conservation importance or have conservation values that are not threatened by hunting/fisheries activities [4]

---

[3] This definition is used since 1990 (MoF 1991, vol.1, p.40). Prior to 1990 a different definition was in use based on the Basic Forestry Law of 1967 and instituted in 1983: I. Protection Forests II. Conservation Forests (a. Nature reserves b. Wildlife sanctuaries c. National parks d. Hunting parks/reserves e. recreation forest parks)

[4] In 1990 there were only 13 hunting parks with 0.37 million ha (MoF/FAO 1990, p. 70f).

1.4. Indonesia's international commitments in conservation

Indonesia's efforts aimed at preserving its rich biotic wealth have to no small extent been supported by international actions highlighting awareness and support for biodiversity conservation. On the basis of the global biodiversity strategy produced by WRI, IUCN and UNEP in collaboration with FAO and UNESCO (and in conjunction with the United Nations Conference on Environment and Development (UNCED) in Rio in 1992), Indonesia was encouraged to develop a Forestry Action Plan (1991) and a Biodiversity Conservation Action Plan (1993) which includes a national strategy for implementation of the plan.

The identification of protected area site priorities was assisted by FAO and WWF in the first National Conservation Plan of Indonesia (MacKinnon et al. 1981-82), the Protected Areas System Plan for Marine Resources in Indonesia (Salm and Halim 1986) and the Conservation Plans for Irian Jaya (Petocz and Raspado, 1983, 1987, 1989).

These programs have generated a number of project profiles which were recommended for technical assistance and investment. Donors and NGO's have shown particular interest in supporting conservation projects in Indonesia (for details see Annex # 1).The government's focus has been on developing its parks as Indonesia's centerpiece for conservation.

1.5 Implementation of conservation area programs

While the national system of conservation areas is generally considered adequate on paper to ensure the survival of most of Indonesia's biological resources, the implementation of programs for protected areas seems to be difficult providing little actual protection on the ground.

These programs are frequently controversial as, for instance, conservation areas management proceeds without specific guidelines and government regulations for the interpretation of existing protected areas legislation.

1.6 Need for policy review

The need to address conservation issues in the context of the national development effort is increasingly acknowledged at the political level. With the signing of the Agenda 21 of the 1992 United Nations Conference on Environment and Development (UNCED) in Rio, Indonesia committed itself to sustainable development. An evolution of GOI-policy from pure conservation to conservation-cum-economic development has taken place.The hard work of identifying and implementing policy shifts "on the ground" has hardly begun. As GOI, NGO and foreign donors put increasing resources into the field

of sustainable development, a review of the policy environment seems to be necessary.

The present study proposes to contribute to the process Indonesia is currently undergoing of easing the tension between preserving the biodiversity within natural ecosystems on the one hand and demands for their economic exploitation on the other.

In the view of the author it is premature to advance "solutions" at this stage of the process. Under these circumstances it seems advisable to continue the quest for viable options by learning from experience and by further supporting innovative approaches. This study specifically aims at strengthening the awareness of decision makers on developments that may require policy shifts "on the ground" whereby reference is made to experiences gained from ongoing activities in this field.

II. HISTORICAL DEVELOPMENT OF PROTECTED AREAS IN INDONESIA

At the time of Independence, 15,048 sq. km of reserves had been gazetted and only 500 sq. km were added by 1975 (MoF/FAO 1990). As the impact of economic development on natural habitats became more apparent in the seventies, largely as a result of extensive logging and transmigration schemes, the GOI became more aware of the need for conservation, and gazettement of nature reserves was accelerated. Significant strides in nature conservation were made between 1979 and 1984 during the period of the GOI/FAO National Conservation Plan project when roughly 100,000 sq.km of reserves were added. By 1982, 11.9 million ha of a planned 18.7 million ha had been set aside for nature conservation which included nature reserves, wildlife sanctuaries and recreation areas (for details see annex # 3).

By the end of 1992, 16.2 million hectares of land (= 8.5 % of Indonesia's land area)[5] and 18 million hectares of protection forest (=9.5% of Indonesia's land area) existed throughout the country, bringing the figure of protected areas up to 35 million hectares or almost 18 percent of the country's land area[6] (for details on conservation area see Annex # 4).

Already proposed for inclusion as protected area are another 7 % of the country, bringing the figures for conservation area to 19.0 million ha (10 % of the country) and of protection forests to 30.0 million ha (16 % of the country) by the end of Repelita VI (MoF/FAO 1991), in addition to 30 million ha as marine conservation areas by the year 2000 (BAPPENAS 1993, p.23). This seems to be a very ambitious objective. Guidelines are being developed for integrated marine protected area management coordinated by the Ministry of Environment for PHPA as lead agency.

The rationale for establishing these protected areas was to incorporate most important reserves (priority reserves) in each major habitat type within each of Indonesia's seven major,

---

[5] Consisting of nature reserves (31 national parks, 170 nature reserves, 44 wildlife reserves, 62 nature recreation areas and seven marine parks (BAPPENAS 1993).

According to Sloan and Sugandhy (1993) there are currently 24 marine areas (covering 2.5 million ha) in Indonesia, six of which are national parks . Three marine protected areas have management plans, but they have not been approved by PHPA and thus they remain unimplemented. Three other areas have management plans in preparation. But progress is slow as PHPA lacks resources as do the regional forestry office (Kanwil) responsible for management implementation.

The total area under national parks is 7,910,592 ha. 11 parks are legalized by surat keputusan MoF and 20 parks by surat pernyataan Mentan/Menhut. 12 parks are managed by Technical Management Units and the remainder by SubBKSDA or as projects (see MoF, Pola Penanganan Nasional secara Terpadu. In: Rumus Hasil Lokakarya Peningkatan Peran Serta Masyarakat dalam Kegiatan konservasi Taman Nasional Rinjani. Mataram 12 - 13 Aug.1993).

[6] According to Economic & Business Review Indonesia No.78, Oct.1993, p.32.

biogeographical zones: Sumatra, Java Bali, Kalimantan, Sulawesi, Nusa Tenggara, Maluku and Irian Jaya. These Priority Reserves (86) deserve urgent attention. The premise for this approach was that in order to ensure biodiversity in the country equal attention needs to be given to each of its major zones of diversity. The areas' site priorities for conservation were largely identified and documented by the government, assisted by FAO and WWF, in the National Conservation Plan for Indonesia (McKinnon et al 1981-82), The Protected Areas System Plan for Marine Resources in Indonesia (Salm and Halim, 1984), the Irian Jaya conservation development strategy and the Asian Wetland Bureau's Indonesian Wetland Inventory.

The conservation of biodiversity has been the overriding aspect for the creation of the protected area system. A new dimension was introduced in 1982 when the III World Conference on National Parks, held in Bali, drew particular attention to the relationship between protected areas and human needs and showed the need for reconciling conservation with development. The Bali Congress led to innovative approaches to the establishment and management of protected areas, e.g. at Dumoga-Bone National Park.

Indonesia has seen a period of rapid growth of area set aside for protection particularly in the last decade. The protected area system of the country is impressive. Yet, it may still be inadequate to conserve all habitats and all species. For instance less than 5% of species-rich lowland forests has been included in the present system (BAPPENAS 1993). The conservation of wetlands and endemic ecosystems needs special attention.

Whether such an ambitious target can be met at all, remains to be seen given the fact that little or no effective management of the country's protected areas has occurred so far. Conservation of wetland and marine resources will require special innovative approaches to management, such as e.g. community management of coral reefs as PHPA is utterly lacking resources.[7]

It is evident that institutional development has not kept pace with the rapid creation of new protected areas in Indonesia. (See development of PHPA budget against protected area; annex # 5)

The realization that conservation needs to become part of the foundation of national development requires stronger links with other sectors of the economy, more effective working relationship with local people, effective economic incentives, etc.

---

[7] Given the lack of resources, Sloan and Sugandhy (1993) argue that it might be preferable to concentrate on a few well managed protected marine areas rather than to have many marine areas on paper.

These and other crucial issues have been identified and laid down in Indonesia's Biodiversity Action Plan which is to constitute the biodiversity component for the Second Long Term Development Plan and for Repelita VI (1994/95 - 1998/99) and which provides an excellent basis for policy, legal and institutional reforms.

III. PRESENT FRAMEWORK OF PROTECTED AREA MANAGEMENT

3.1 Present Policy

(a) Indonesia's policy related to conservation clearly maintains that all forms of natural life and examples of all ecosystems in the country must be preserved for present and future generations. The GOI is committed to the perpetuation of these natural resources in the process of development (MoF/FAO 1990, p. 65). This commitment set the stage for the identification of a comprehensive national protected areas system elaborated with the help of FAO and WWF/IUCN and PHPA between 1981 and 1984. The National Conservation Plan, the Marine Conservation Plan and the Irian Jaya Conservation Plan continue to form the basis for site selection for management.

The legal basis for this comprehensive protected area system (unclear whether it included protection forests) was created by Act No. 5 of 1990 concerning the Conservation of Living Natural Resources and their Ecosystems.

In order to ensure that all protected area plans so far elaborated fulfill the requirement set out in the aforementioned Act, a number of plans (terrestrial, marine and wetland environments) are being reviewed under a PHPA-project supported by the World Bank.

(b) While goals related to protected areas were somewhat vague in Repelita V (see Annex # 6). the Biodiversity Action Plan of Indonesia, first drafted and presented in 1991, became the most detailed and comprehensive framework for biodiversity conservation and hence also for about 50 % of its protected areas Indonesia has ever had. This plan provided guidance during Repelita V and outlines conservation priorities for Repelita VI and for the Second 25-Year Long Term Development Plan period. The latter two are under preparation. The plan sets out a strategy for action in the following fields:

- in-situ conservation inside terrestrial protected areas (reserves and protection forests)
- in-situ conservation outside the protected area network
- in-situ marine and coastal conservation
- ex-situ conservation

The establishment of a National Biodiversity Commission is specifically suggested with representatives from all key government agencies concerned with the management of biodiversity (MoF, PHPA, Agriculture, Fisheries, Environment, Interior, LIPI-Lembaga Nasional Oseanologi). The commission should meet regularly under an independent chairman drawn from

the Indonesian academic community. Advisors from national and international NGOs and other agencies could also be invited. Major issues addressed in the Plan are:

The implementation of the Plan will require legal and institutional reform and institutional strengthening.

The active participation and support of local communities as de facto managers of the forests, wetlands and marine resources will be crucial.

The Plan calls for greater collaboration between government agencies, local communities and NGOs.

The management of protected areas and of the buffer zones should be left in the hands of local authorities working with local agencies and NGOs. Thus the focus is expected to be on local government and local community management to place responsibility in the hands of those most likely to benefit from sound management.

Emphasis will be put on enhancing dialogue, coordination and feedback between the key players involved in biodiversity programs at national, provincial and local levels.

New funding strategies and mechanisms are proposed to ensure initial investments and to cover recurrent costs of biodiversity programs as well as economic incentives and penalties to promote conservation.

The Biodiversity Action Plan calls for close monitoring and regular evaluation and reviews. It is not regarded as a static document.

(c) The Biodiversity Action Plan of Indonesia clearly reflects the concern of the government to re-examine its role in protected areas. It thereby acknowledges that after a phase of rapid gazettement and creation of protected areas on paper proper management at ground level cannot be assured unless the government finds partners for joint management of these areas. Indonesia hopes to get financial support from the Global Environmental Facility (GEF) administered jointly by the World Bank and UNDP/UNEP. Kerinci Seblat National Park is one of the projects currently under review for GEF funding.

(d) The Biodiversity Action Plan calls for experimentation with new institutional arrangements. Under the coordination of BAPPENAS and in conjunction with MoF/PHPA a new approach has been pursued in 8 national parks on a trial basis for the last

two years.[8] It is known as the Integrated Conservation and Development Project (ICDP), an approach which attempts to link biodiversity conservation in protected areas with social and economic development in surrounding communities. While the management of national parks itself is expected to be improved, the incomes of the local people living adjacent to the park is also increased so that they support the conservation efforts in the park.

There are currently eight national parks (G. Leuser, Kerinci-Seblat, Gede-Pangrango, Halimun, Bromo-Tengger Semeru, Kutai, Dumoga-Bone, Lore Lindu) included in the test phase which is accompanied by closer dialogue between the government agencies involved at local levels (coordinated by Bappeda Tingkat I) and at national levels (coordinated by Bappenas).

Based on the experience gained from these cases national guidelines on the responsibilities of the parties involved in the management of national parks and their surroundings are to be formulated. A number of donors has shown interest in supporting ICDPs. Eventually national guidelines for the integrated management of all types of conservation areas are expected from this exercise.

ICDPs seek the systematic devolution of management responsibility closer to the people living around the protected area. ICDPs imply a steady decentralization of management authority over the conservation area, including budgetary and staffing responsibilities.

3.2 Institutional Framework

(a) Protected areas

The designated government authority responsible for the stewardship of the protected area system is the Directorate General of Forest Protection and Nature Conservation (PHPA) within the Ministry of Forestry (MoF). PHPA's mandate covers the planning, designation and the management of all terrestrial, wetland and marine protected areas, and the planning and supervision of protection forests.

---

8 A forum (Rapat Koordinasi - RAKOR) was created by BAPPENAS and MoF under a program called "Pola Penanganan Masalah Taman Nasional Secara Terpadu" with the objective to foster coordination of agencies working in or around a national park and to help generate action plans for the area surrounding the parks. The RAKOR last convened in November 1993.

(b) Institutional setup at regional level

At the provincial level PHPA is represented by the Natural Resources Department (Kantor Sumber Daya Alam or KSDA) which falls under the authority of the Provincial Forestry Department (Kantor Wilayah Kehutanan), headed by a representative (Kepala Kanwil Kehutanan) of the Minister of Forestry. In addition, there are regional representatives of the PHPA-Director General called Balai KSDA which may cover several provinces. These again have Sub-Balai KSDA with at least one office in each province.

Most national parks are managed by special bodies, Kantor Taman Nasional (or UPT Taman Nasional) whose heads are directly responsible to the PHPA Director General and to the Kanwil Kehutanan of the Province. Projects funded by MoF are usually implemented by Technical Management Units (Indonesian: UPT), consisting of MoF personnel.

The responsibility for survey and demarcation of protected areas boundaries in the field rests with the Directorate General of Forest Inventory and Management (INTAG).

The mandate to enforce legislation on protected areas is with PHPA in cooperation with the police department.

(c) Protection forests

These forests are administered and managed by the provincial forestry service (Dinas Kehutanan) which is responsible to the governor. In Java it is the state-owned forest company PERHUTANI which is directly responsible. Supervision and planning is, however, in the hands of PHPA.[9]

(d) The Ministry of State for Environment (LH)

It advises the government on conservation, environmental and biodiversity policy. It is particularly active in raising conservation awareness.

(e) Other government agencies

There is a series of other government institutions with responsibility for managing biological resources. These include the Institute of Science (LIPI), the Ministries of Home Affairs,

---

9 According to Peraturan Pemerintah (PP) No.64 of 1957 in conjunction with PP No.33 of 1970.

Mining, Agriculture, Public Works and Transmigration. BAPPENAS played a key role in promoting and sponsoring the development of the Biodiversity Action Plan for Indonesia of which the protected areas component is a major part. In the provinces the planning boards (BAPPEDA Tingkat I and Tingkat II) play important roles in coordinating all planning and advising and monitoring development programs and thereby becoming indirectly responsible also for conservation.

(f) Non-governmental agencies

The role NGOs play in protected area management has been in the field of raising public awareness in conservation issues and urging government to strengthen legislation and action research.

(g) Local communities

They do not participate in the planning and management of protected areas.

(h) Private sector

They do not participate in planning and management of protected areas.

(i) Creation of protected areas

PHPA is responsible for the creation of protected areas. Earmarking and gazettement is done by PHPA in close cooperation with the regional planning boards (BAPPEDA Tingkat I and II) which contribute to the environmental, socio-economic and management surveys. Formally the governor of the province has to suggest the area to be protected to the MoF for gazettement.

3.3 Legal Framework

(a) Basic Forestry Law No 5 of 1967

The basic legal framework through which the MoF addresses the issues of forest protection and wildlife conservation is primarily the Basic Forestry Law No. 5 of 1967. It specifies the responsibilities of the government covering all aspects of conservation as well as the relationship between the people and State regarding forest ownership and use. This law provides for protection of conservation areas but does not specifically recognize adat community property issues nor is it compatible with in-situ conservation outside protected areas (Bappenas 1993).

(b) Law No.5 of 1990 on the Conservation of Living Natural Resources and their Ecosystems

This law stresses Indonesia's commitment for the conservation of its biological resources and provides a legal basis for the enactment of national parks. The implementing regulations are being drafted.

This law refers only to conservation - hence all protected area categories except protection forest. For national parks a zoning system is stipulated which includes a core zone, a utilization zone and others (including a wilderness zone (=rimba), traditional use zone and rehabilitation zone) depending upon the park's particular needs for nature conservation. The law is unclear as to the responsibility of regional bodies.

The concept of participation expressed in this law (§ 37(1)) is essentially 'top down' in contrast to what is conveyed in Environmental Management Law No.4 of 1982 (§ 3(1) +(2)). Both laws of 1967 and 1990 give the MoF authority to administer and manage all designated forest land and conservation areas.

(c) Regulations and Legislation relating to the Management of Protected Areas

- Minister of Forestry Decree No. 687/Kpts-II/1989 sets the framework for exploitation of national parks, and terrestrial and marine reserves.

- Minister of Forestry Decree No. 688/Kpts-II/1989 sets criteria for obtaining permission for commercial exploitation of national parks as well as forests and marine reserves.

- Minister of Forestry Decree No. 441/Kpts-II/1990 sets provisions for setting fees and collecting dues in forests, national parks, forest and marine reserves.

- Law No. 9 of 1985 on fishery resources regulates all activities related to the management and use of fisheries/marine resources.

- Presidential Decree No. 32 of 1990 addresses the management of protected areas in far broader terms than simply conservation areas mentioned in Basic Law No. 5 of 1990.

(d) Environmental Management Law No. 4 of 1982

This law states basic provisions for the management of the living environment by linking the principles of sustainable environmental management to improving human welfare. It emphasizes a holistic

approach in planning and calls for the involvement of local communities in environmental planning as far as that is practical. The law provides for the assessment of environmental impacts of development projects. Under the associated Government's Regulation No. 29 of 1986 each ministry is expected to assess the EIAs (Amdal) for ongoing and proposed projects which might have adverse environmental impacts. PHPA is charged with that mandate for logging concessions.

(e) Spatial Management Law No.24 of 1992

This law coordinates and integrates the sustainable management of sea, land and air resources in a spatial context. It provides regulation on spatial arrangement at national, regional and local level. No executing agency has been named and no implementation plan has been completed.

(f) Law No.10 of 1992 on Population Development and Development of Happy and Prosperous Families

This law guarantees territorial rights of traditional communities (Masyarakat rentan) so that their traditionally developed areas will not be overwhelmed by newcomers.

The application of this law to forest dwelling communities, for instance the construction of a logging road without the consultation of a local indigenous community, may be reviewed in administrative court proceedings. This law may lead to changes in the legal landscape.

(g) Regulation related to management coordination

No official regulation relating to management coordination in and around protected areas between the MoF, the Provincial administration and the Regional Autonomy Division (PUOD) of the Ministry of Home Affairs has yet been issued.

In the case of Kerinci Seblat National Park which straddles four provinces in Sumatra, a committee was formed in 1991 comprising BAPPENAS, the Ministry of Home Affairs (PUOD) and other agencies which produced a draft manual for coordinating measures to tackle problems arising in the management of Kerinci Seblat National Park.[10] It may serve as a guideline for the management and coordination of national parks located in more than one province.

---

10 BAPPENAS, Pedoman Koordinasi Penanganan Masalah Taman Nasional Kerinci Seblat disiapkan oleh Kelompok Kerja: S.K. MENDAGRI Nomor 423.205/752/PUOD tanggal 19 Agustus 1991

(h) Guideline for national park management

The management of protected areas is not yet regulated by government. What is available at present is only a guideline for the management of national parks issued by PHPA (Pedoman Penyusunan Rencana Pengelolaan Taman Nasional, Bogor, Mei 1993) based on a decree of the Director General of PHPA No. 59/Kpts/DJ-VI/1993.

(i) Buffer zone

Buffer zones (mintakat penyangga) were officially introduced by a decree of the Director General of PHPA (Decree of 12 December 1987)[11] and were initially applied to five parks (Leuser, Bromo-Tengger-Semeru, Baluran, Bali Barat, Dumoga-Bone). While these have been mapped, boundaries have not yet been defined in the field. Specific regulations and procedures related to the organization of management for buffer zones have yet to be designed.

---

11 DHV-Consultants et al.: Buffer Zone and Research Management for Indonesian National Parks. World Bank Park Project. Inception Report. September 1989, p.10.

IV. ASSESSMENT OF MANAGEMENT AND MANAGEMENT POLICY

4.1 Policy

(a) Trickle-down of policy recommendations

The policy recommendations outlined in the Biodiversity Action Plan of Indonesia have not yet been brought to the attention of agencies and communities at ground level.

(b) Supporting innovative approaches of management

It is encouraging to see that the government currently seems to be more inclined to support innovative approaches of protected area management. One example is the Integrated Conservation and Development Project (ICDP) approach as presently pursued by BAPPENAS in cooperation with PHPA in 8 national parks on a trial basis with assistance of several donors.[12] BAPPENAS acts as a coordinating agency at national level while emphasis is put on decentralized forms of planning and management. At provincial and district levels BAPPEDA Tingkat I and Tingkat II are in charge of coordination and management. In a few of these sub-project task forces, working groups and joint implementation groups (JIG) have been formed under BAPPEDA Tingkat I (e.g. ODA - Central Kalimantan, ODA mangrove project). Further examples of new forms of management include the official recognition of traditional forest management practices by local communities at Keluru village (Kerinci Seblat) and a participatory forest concession management by local agroforesters at Sanggau, West Kalimantan.

(c) Marine and coastal protected areas

So far the conservation of primarily terrestrial areas has dominated the discussion and thinking of policy makers in Indonesia. There is a general lack of understanding on the management issues of marine conservation areas as well as coastal wetlands, particularly as regarding ecology and its socio-economic aspects (e.g. Bunaken, North Sulawesi). This bias is reflected in the recently issued guideline for national parks.

---

[12] Under a program known as "Penanganan Masalah Taman Nasional" ("Handling of National Park Problems") started in Kerinci Seblat National Park in 1991/92 and since 1992/93 extended to Dumoga-Bone, Gunung Leuser, Bromo-Tengger-Semeru, Kutai, Lore Lindu, Gunung Gede Pangrango and Halimun.

Marine conservation requires, as a rule, coordinated planning of a greater number of agencies, particularly as the MoF is not seen as the major player in marine affairs. Spatial planning and zoning require different approaches as compared to terrestrial areas. While terrestrial zonation, for instance, often consists of a series of concentric rings with increasing protection levels towards the central core zone, such a system is not applicable in marine ecosystems.

For coastal resources, particularly sub- and inter-tidal habitats such as, coral reefs an open access system is conspicuous. With a few exceptions in Eastern Indonesia there is no sense of ownership of these resources by local communities and hence no incentive to manage them carefully.

While in theory mangroves are government property, in the field an open access system occurs. Local communities in North Sulawesi, for instance, have the feeling that they are "stealing" when in fact they utilize mangroves any way. As a result uncontrolled clandestine mangrove cutting occurs which is more difficult to control than if controlled use rights for local communities were initiated (Usher 1993).

(d) Involvement of private side

In trying to encourage the private sector to take a greater share in the management of conservation areas, in the last four to five years the government has shown a considerable willingness to allow new forms of private involvement to develop, for instance in the context of recreational forests which are to be managed by private enterprises (Annex #7).[13] In 1990 an innovative initiative linking conservation with development had been taken by local industry, P.T. Kaltim Prima Coal which funded an action plan for the management of Kutai National Park (carried out jointly by WWF-Indonesia Program, the Research Institute for Nature Management/Netherlands) and Euroconsult with PHPA). The MoF/PHPA (1991) report contains 12 proposals for projects amounting to US$ 8.5 million for which funding is sought from both the private sector and international donors. The company implemented environmental monitoring on its mining activities. Other industrial enterprises in the vicinity of the park have expressed their willingness to assist in the implementation of the development plan. This initiative establishes an important precedent which demonstrates the catalytic role which the private sector can play (see Bachruddin et al. 1992).

---

13 The list shows that while up to 1987 only government owned companies figured as entrepreneurs, private companies have entered the field since then.

(e) Indigenous resource management

Despite general statements mentioned in the law recognizing traditional rights of local people, forestry policy has - broadly speaking - not yet taken any of the positive aspects of indigenous resource management regimes into consideration (See also Moniaga 1991).

(f) Buffer zone

Although the establishment of buffer zones around conservation areas is required by Law No. 5/1990, no clear government policy on how to develop such zones has yet emerged. With a few exceptions there seems to be a lack of working models with buffer zones. At Gunung Leuser and Kerinci Seblat buffer zones were attempted with little success due to unclear understanding of the concept.

(g) Management plans

Such plans are only required for national parks and not for other forms of protected areas.

(h) Strict nature reserve

The concept of strict nature reserve (cagar alam) has proved unworkable in a number of regions and needs to be reviewed (ADB 1992; Usher 1993).Frequently too many people are already living inside these reserves so that resettlement becomes too costly or impossible for lack of nearby alternative land. In these cases a reclassification to national park status is attempted.

4.2 Institutional Aspects

4.2.1 Administrative Structure

1. Given the rapid expansion in the number and overall size of protected areas PHPA's resources have not kept pace to ensure proper protection. PHPA has been put under great pressure and is asked to do more with the same limited resources (annex # 5).

   PHPA is often not in a position to tell what type of assets it has in terms of flora, fauna, marine and terrestrial ecosystems and what is happening to them. It has no apparatus to intervene in case of infringement. Law enforcement is hampered by a lack of specific work plans, reporting schedules, limited logistical facilities, incentives for good performance, and generally very low salaries which do not enhance staff dedication. Likewise, no in-depth training on

participatory planning techniques with local communities is provided.[14] Mapping of boundaries of protected areas is usually done by INTAG without full consultation of local communities.

There is a lack of public awareness and support for protected areas. Extension programs are limited in duration. They are generally absent in the outer islands.

2. The effectiveness of government conservation programs is considerably constrained by under-funding [total budget for 1992/93 is Rp 456 mio (including allocations from the reforestation fund)]. Resource allocation tends to be unbalanced with most resources of PHPA (64%) managed by headquarters while only 36% is managed by the regions (PHPA Statistics 1992/93). There are insufficient funds for essential new equipment as well as for the upkeep and maintenance of existing equipment. National parks as the government's centerpiece of the conservation system receive the major share of the protected areas funds.

   PHPA's manpower is greatly insufficient, particularly in terms of trained and skilled technical and management personnel in the field. Of PHPA's staff of 4,548 (1993)[15] more than one third are assigned to headquarter posts in Java. Many protected areas outside Java exist only on paper; they have hardly any professional staff with management skills, very limited budgets and hardly any protection and management. As far as marine and coastal conservation is concerned there are almost no trained marine biologists at PHPA to take care of this field professionally. Several donors seem to be willing to aid such an expansion. Yet it remains highly questionable whether an 'orthodox' conservation method such as an increase of qualified staff will be the answer to the problem of protecting the conservation areas.

3. There is a lack of understanding of ecological and particularly socio-cultural conditions in protected areas. Heavy-handled government involvement in dealing with local

---

[14] Under the National Parks Development and Research Management Project supported by the World Bank, Japan and the Netherlands a training course for buffer zone management was designed at the School of Environment and Conservation Management at the Forestry Training Institute (BLK). The training courses included rapid rural appraisal methods (adjusted by the KEPAS group), and goal oriented project planning (ZOPP) techniques.

[15] According to Secretariat Directorate General of PHPA, Statistics 1993/4, personnel totals are:

- Headquarters:	551
- National Parks:	1,662
- 8 BKSDA + Sub BKSDA:	2,335
	4,548

populations without profound understanding of their culture has been a frequent cause of conflict, e.g. at Cyclops Mountains in Irian Jaya (Mitchell, A. et al. 1990).

4. There is considerable evidence for conflicts caused by competing functions of protection and production. Usually the short term economic considerations prevail.

5. The degree of degradation is particularly high in protection forests for which no management plans are required.

4.2.2 Coordination Mechanisms

1. Coordination among sector agencies

The government agencies concerned with protected areas cover a wide range of responsibilities which include policy, planning, management and monitoring at various levels within the government structure. These agencies operate within a framework of laws and regulations. However comprehensive this conservation system may be, it becomes increasingly evident that institutional links which bridge and harmonize goal-oriented, cross-sectoral development are frequently missing with the result that conservation issues tend to be neglected.

Overlapping functions of agencies and confusion over authority and jurisdiction have impeded the management at regional level, e.g. at Segara Anakan-Cilacap, South Central Java. In a number of instances community programs in health, education, agriculture and infrastructure[16] and even forest concessions are carried out within protected areas, e. g. G. Leuser, Lorentz, Kutai, Kerinci Seblat, Lore Lindu, Kepulauan Seribu and Cyclops Mountains/ Irian Jaya.

There does not seem to be a reliable administrative mechanism to ensure communication or to resolve conflicts of interest between PHPA and other groups wishing to utilize the resources in the protected areas for non-conservation purposes. Thus these sites are frequently in conflict with minerals and petroleum concessions (e.g. Kutai with coal; gold mining in Dumoga Bone, Kerinci Seblat (Bengkulu) and Halimun/West Java).[17] There seems to be no clear policy regarding the exploration and development of minerals and oil in protected areas, nor are there guidelines for the rehabilitation of degraded lands or for infrastructure development. Inconsistent perceptions of various government agencies towards the

---

[16] Intrusions are also caused through the granting of forest concessions adjacent to protected areas which frequently led to more encroachment in nearby protected areas as a result of the building of logging roads (e.g. Kerinci Seblat).

[17] Until 1990 under special conditions mining was permitted in strict nature reserves.

conservation area led to confusion in implementation. This was the case in Kutai National Park where the provincial government wanted to remove the local population living inside the park while PHPA and the approved management plan did not suggest such a move (Petocz et al.1990).

The management of marine and coastal protected zones has been rendered particularly difficult for imperfect coordination and sectoralism. These zones require the involvement of a great number of agencies at both national and provincial level (annex # 8).

2. Conservation and timber exploitation

As most protected areas are in the realm of forested areas in Indonesia, the agency responsible for conservation - PHPA - is therefore part of the Ministry of Forestry (MoF). While this has certainly facilitated the allocation of forest land to protected status, the focus of MoF continues to be on the exploitation of timber,at times even infringing upon protected areas (e.g.Kutai, Gunung Leuser, Kerinci Seblat).

3. Integration with regional and spatial planning

Most planning and management of protected areas is done isolated from regional as well as spatial planning. The areas for conservation have been set aside without consideration of regional economic development (e.g. Bukit Baka, Dumoga Bone, Gunung Leuser). The design of protected area boundaries is frequently done without consulting local communities. The boundary committee (panitia tata batas) at regional level does not exert any control on the forest boundary plans submitted by the Provincial Forestry Department (INTAG). Buffer zones, for instance, are not dealt with explicitly in spatial plans. Moreover, Law No.5 of 1990 does not say anything on how to create them.

4. Role of local government

While PHPA is officially mandated with the management of conservation areas, both marine and terrestrial environments, for lack of resources and enforcement mechanisms the role of local authorities may be crucial for the success of the protection activities. In the case of Dumoga-Bone National Park the local government successfully supported the protection activities. In other cases it led to conflicts as was the case of Taman Nasional Pulau Seribu where in 1989 a Decision of the Governor of DKI Jakarta (No. 1814) provided guidelines for the development of the sub-district of Kepulauan Seribu. The decision only identified 14 islands as part of a native reserve, instead of 70 for which the park had already established zoning. The decision outlines general

land use planning for each island of the archipelago and repeatedly identifies the governor as the sole authority for development of the islands although these are essentially declared as conservation areas by a MoF/PHPA (Yates 1993, p. 10).

5. Coordination with local communities

Because of lack of coordination between traditional community institutions and government agencies, conflicts with traditional land use is not infrequent, e.g. at Kayan Mentaran/ East Kalimantan where almost one quarter of the village of Long Uli land overlaps with the nature reserve and 26 % is protection forest (Sirait 1992, p.87).

6. Interprovincial coordination

In cases where a protected area covers parts of more than one province the present mechanism for coordination does not suffice (e.g. Kerinci Seblat).

4.2.3 Role of Local Communities

1. Traditional law

There are numerous instances in Indonesia where traditional law has been most effective in protecting natural resources. Crucial for the success seems to be the

- exclusive access of the community to the resources, and;
- clear sanctions enforced in case of non-compliance (e.g. Sangeh/ Bali)

2. Management plan and boundary setting

The management plans and boundary descriptions of protected areas, specifically of national parks have - as a rule - been made with little consultation of local communities. As these boundaries are often poorly enforced, local people tend to ignore them. Further confusion is caused in the field when boundary prescriptions by PHPA are ignored during survey and boundary setting by INTAG (e.g. Kutai, Pulau Seribu).

3. Institutionalizing participation

Participation is specifically required by Law No. 5 of 1990, §37. In the absence of implementing regulations no guidance (e.g.

methodology) is provided on how to institutionalize the involvement of local people.[18] Educational programs for local communities aimed at raising environmental awareness and strengthening their role in local resource management are considered a prerequisite in the process of institutionalizing participation.

4. Traditional usufruct rights

There seems to be considerable ambiguity in people's rights to utilize forest resources in and around protected areas. Conflicts are reported between PHPA managers and local governments over granting land tenure to forest edge communities and over differing views about intensification and diversification of agriculture in buffer zone management strategies. As a result community relations tend to be strained.

5. Organizational capacity of local communities

Local communities in a number of cases do not seem to have sufficient organizational capacity or funds to actively participate in the planning and management of protected areas and to become accepted partners of government agencies and other resource users. For the promotion of local responsibility in resource management the intervention of professional NGOs proved useful (e.g. Wasur, Java Social Forestry Program).

6. Groups of local resource users

There is evidence that resource user groups can play important functions in resource management, such as representation and advocacy, planning management action and self-regulation, devising mechanisms for dispute resolution, as well as enforcement and policy (e.g.traditional community forest at Kera/Sangeh(Bali)).

7. Professional facilitator

To bridge the gap between local communities and other resource users - above all government agencies - professional facilitators (e.g. NGOs) played an important role. The qualifications needed for

---

[18] In 1992 the Ministry of Environment coordinated a national policy on coastal community development in which the bottom-up approach was emphasized but no guidance was provided on how to institutionalize it. The action program suggested will be conducted at three locations and encompasses:

- infrastructure development according to bottom-up perceptions of basic needs linked to local conditions
- socioeconomic improvements in incomes, education, community cooperation and village environmental quality
- optimal sustainable use of marine and coastal resources while maintaining the environment.(Sloan and Sugandhy 1993, p.10)

such a difficult role are, however, seldom found locally and even rare in Indonesia.

8. Incentives

In order to gain the acceptance of the local community towards ideas of participatory planning and management of protected areas concrete measures that benefit the local population and which served as incentives proved helpful. In the Java Social Forestry Program farmer groups (KTH) were formed with the help of professional facilitators (Bina Swadaya). Concrete economic activities were developed at the beginning of the project from which farmers derived direct benefit. This was followed by training courses attended by both the farmer groups and the local staff of the State Forestry Corporation (Perum PERHUTANI) who were acquainted with social aspects of resource management, participation and community development. As a result the atmosphere between the state and the community has greatly improved. Close monitoring and evaluation was done by IPB Bogor.

4.3. Legal Framework

(a) Legislation

The body of laws and regulations pertaining to protected areas or parts of them is impressive.

The development of the laws reflects Indonesia's rising concern for the conservation of its natural resources and ecosystems. The current legislation has however not yet fully taken account of the need for greater interaction/integration between conservation and development.

The lack of implementing regulations particularly of Law No. 5/1990 has rendered the work at ground level difficult, particularly with respect to the issue of participation of local communities, traditional resource rights and the involvement of the private sector in the management of conservation areas.

(b) Protection forests

For these forests which are part of the protected area system no specific guidelines or legal basis, on zoning, buffer zones etc. as well as on their integration with development in surrounding areas have been developed.

(c) Local forest and marine management

In essence, none of the positive aspects of indigenous resource management regimes have yet been taken into consideration at ground level. No provision has been made by law for local forest management utilization.

(d) Hunting forest

For this category of protected area no decree has been issued that regulates its management (Wartapura 1993, p.35), although some twelve locations have already been designated as hunting forests, e.g. Taman Buru Moyo (Sumbawa).

(e) Community and adat rights

The Basic Forestry Law No. 5/1967 (Articles 2(2) and 17) acknowledges private property community rights and adat (customary) rights. As there are no implementing regulations, the implementation of the law never really materialized to the extent that e.g. local communities are having the feeling of harvesting products illegally from their adat gardens located in protection forests. The only category of protected areas for which traditional community rights have been explicitly mentioned in Law No. 5/1990 (Article 32) is national parks where the so-called "zona pemanfaatan tradisionil" or traditional use zone is feasible as part of the "zona lain". This law states that the zoning system of a national park should include a "sanctuary zone" where no human interference is permitted. Where for practical reasons such a zone cannot be established - as in the case of Wasur National Park where traditional collecting, planting and hunting (with bow and arrow) occurs throughout the park, the whole park was declared "traditional use zone".

Strong legal status of strict protection of a certain area would in fact have hampered conservation efforts raising mistrust and suspicion amongst local government and communities. This pragmatic and flexible approach to park management is believed to have the greatest chance of succeeding in securing resources and biodiversity and in becoming a precedent in Indonesia (Craven et al. 1992).

(f) Buffer zone

In the absence of concrete implementing regulations of Law No. 5/1990 which also stipulates the establishment of buffer zones around all types of conservation areas, there is a lack of understanding of how they should be formed and what should be done in these zones (ADB 1992, p.17).

(g) Boundary setting

Boundaries around protected areas as far as they exist have been established by government with little or no consultation of local communities. In many cases clear boundaries do not exist at all or boundary markers had been removed by the population (pers.comm. with A.Fraser,ODA Forestry Advisory Group).

(h) Coastal Zone Management

In the present legislation the complex issues of coastal zone management which involve a series of agencies, traditional land tenure etc. have not yet been addressed. Due to the absence of objective indicators to determine the ecological importance of coastal and marine areas, the assessment of the suitability of such areas for reserve purposes is currently haphazard.

(i) Management plans

Experience from Bunaken National Park shows that the format of management plans stipulated by the official guideline from PHPA since 1993 has serious limitations. It is considered overly pedantic and stringent in some aspects (e.g., type setting, page layout, cover color) and overly vague in others (e.g., zoning). Moreover, this guideline was primarily formulated for terrestrial parks.

(j) Creation of conservation areas

According to Law No. 5/1990, the creation of conservation areas is to be regulated by an implementing regulation. At present the only basis available is a guideline issued by PHPA according to which the Director General of PHPA in close cooperation with regional agencies proposes the gazettement of a particular area for conservation purposes to the MoF.

The classification of protected areas, especially marine areas, needs to be more clearly defined. Bunaken, for example, was originally gazetted as a Strict Nature Reserve (cagar alam) which proved to be inappropriate given the size of the resident population exploiting the park's resources (Usher 1993). The criteria for the zoning of national parks including enclaves are not well defined. There is no common understanding of the functions of "zona inti", "zona pemanfaatan". Experience with the existing system at Bunaken (NRMP) showed that functions and regulations pertaining to each zone need to be clearly defined. A management zoning system exists only for national parks.

(k) Involvement of local communities

How to involve local people and local communities in protected area management remains a highly complex issue which does not seem to lend itself readily for regulation. While according to Law No. 5/1990 it is the government that directs and mobilizes people's participation through extension and education, in Law No. 4 of 1982 participation is expected to be generated by the people themselves.

(l) Competing types of land use

There is considerable potential for conflict resulting from competing uses of natural resources in protected areas. Present legislation does not provide clear guidance. A case in point is mining and energy activities which according to Basic Forestry Law No. 5 of 1967 and government regulations No. 33/1970 and No. 28/1985, upon request could be granted operation permits in most conservation areas (strict nature reserve, wildlife reserve, recreational parks and hunting parks). Law No. 5/1990 does not allow exploration and exploitation in whatever form in conservation areas. In the absence of an implementing regulation of this law, the old Basic Forestry Law of No.5/1967 and its interpretations persist.

The cases where conflicts occurred are many despite a joint decree of the Ministers of Forestry, and Mining and Energy (Surat Keputusan Bersama No. 0120K/10/M.DE/1984 of February 27, 1984) and No. 029/Kpts-II/1984. Conflicts are also reported in marine areas with fisheries.[19]

[19] NRMP - Developing Regulation and Guidelines for Protected Areas in Indonesia. Draft Final Report, August 1993, pp.37-38.

V. CONCLUSIONS AND RECOMMENDATIONS

This study has reviewed the experience of more than 20 projects, most of them in an early stage of development. The lessons drawn from their analysis for the formulation of policy recommendations and the development of a strategy towards protected areas are necessarily limited. It became evident that many of the parameters of social and physical environment under which these projects are operating cannot easily be changed. Many if not most of the factors causing the degradation of protected ecosystems originate from outside the protected areas. These encompass the overexploitation of timber, the encroachment of shifting cultivators, cattle holders and other resource users, the insufficient capacity of the government to protect land owned by the public, economic forces over which local communities living adjacent to the protected areas have no control, among many others.

It is for these reasons that solutions frequently need to be sought outside the protected areas. They usually require the highest levels of government. One of the most pressing questions is whether the government of Indonesia is capable of managing 18 % of the country's land area (in addition to marine parks) soon reaching a targeted 25 % set aside for conservation and protection given the budgetary constraints the state is facing. Even with the possible involvement of the people it is an open question whether for 25 % of the country scattered in pieces across the archipelago effective protection can be provided. Degazettement of a portion of these areas or reduction of the scope of the government's involvement in a good many of these areas may well be the options.

The quest for satisfactory answers to these and other issues related to protected areas in Indonesia continues. The present paper therefore only provides a state of the art review, thereby essentially attempting to support the search for institutional solutions. The quest can be a long one. The process of institutional development is considered paramount in the context of protected areas and cannot be avoided as the process itself is part of the "solution". Thus more practical experience needs to be gained on the ground under different physical, social and administrative conditions.

The major lessons for the future gained from the analysis of over 20 projects forms the first part of this chapter. As it is impossible for the government to address all of the issues raised simultaneously , in the second part of this chapter a few concrete suggestions have been made as elements of an implementation strategy which should receive priority.

5.1 Major Lessons for the Future

1. Political commitment

Indonesia's protected area system, as far as the land area set aside for protection is concerned, is very impressive. It is a result of the growing awareness and concern of the GOI to act fast before it is too late. The system has expanded particularly fast since the 1980's, although important habitats such as wetlands and marine areas are not yet adequately protected. This expansion reflects a strong political commitment to the objective of improved natural resource management. In view of the rising number of conservation versus development conflicts in and around protected areas unequivocal political commitment will be even more decisive in the future.

2. Integration of conservation into the Indonesian development process

It is widely recognized that conservation cannot be ensured unless it is embedded in local regional economic development. The need arises to adjust and develop mechanisms for that purpose. The idea essentially is that the establishment of protected areas through investments directed towards community and regional economic development and the participation of adjacent and enclave communities places the protected areas in focal positions of development. The ICDP approach clearly emphasizes the improvement of institutional mechanisms and the delegation of responsibility, including budgeting and staffing responsibility, to the level of operation.

The ICDP approach is currently pursued in Indonesia in five national parks on a trial basis. Since these trials started only recently, it is too early to derive generic lessons from these projects. The problems that individual ICDPs are attempting to address differ greatly. Moreover, given their comparatively small budgets one should not expect decisive impacts. The ICDP concept does not lend itself readily for implementation given the large number of actors involved and the high demands on management skills required. With more experience in a greater number of protected areas under different conditions an answer may be found on whether instead of pursuing a fully integrated approach the concentration on a few elements of ICDP will prove to be more realistic.

In pursuing this integrated approach further, the following elements need to be kept in mind:

- Direct greater shares of the development effort to the rural population living in or adjacent to protected areas.

- Decentralize protected area management and coordinate ICDP programs with local and provincial needs.

- Make community participation an integral part of planning and management in and around protected areas including zoning. Encourage local communities to fully participate in the formulation and implementation of development program. which directly affect them.

- Encourage PHPA to improve its relationship with local communities.

- Encourage local PHPA staff, local government, local community as well as other resource users(e.g.forest concessionaires) to jointly develop management plans for protected areas and its surroundings, to identify the most pressing needs in those areas, to clearly demarcate and assign management zones, design management programs and identify additional integrated development options and their costs.

- Do not create separate planning processes for protected areas but integrate them with regional development and spatial planning. Ensure that provincial and Kabupaten level strategies (Pola Dasar), Provincial Five-Year Plans (Repelita Daerah) and annual plans reflect the management plans of at least all conservation areas - preferably all protected areas - within the jurisdiction of the province/kabupaten.[20]

- Make communities living nearest protected areas and in enclaves major target groups for investment and assistance with the purpose of making them less dependent on exploitative use of the forest resource.

- Allow traditional communities whose activities are considered benign or without detrimental impact on the protected areas to evolve at their own rhythm.

- Develop broad scale conservation education and awareness programs as an integral part of extension services.

- Promote coordination between participating communities, NGOs and government agencies through working together in participatory workshops, monitoring and evaluation and informal coordination meetings.

In order to avoid conflicts arising from the fact that the same ministry is responsible for protection and timber production a suggestion was repeatedly made to put protection under a different arm of government, e.g. a Nature Conservation Council or a National Park Authority (for national parks only). This idea cannot be

---

[20] See also NRMP, Policy Brief No. 1/Oct. 1993. A first attempt to integrate spatial planning with marine and coastal management in Indonesia was reported for the Brantas River region of East java in 1992. This may become the method for integrated marine and coastal resource management in Indonesia (Sloan and Sugandhy, 1993)

endorsed for the following reasons:

- it would weaken the authority of the BAPPEDA Tingkat I and Tingkat II (levels I and II) of a specific region and hence the local government, and finally run counter to the idea of decentralization.

- as the greatest professional experience in managing ecosystems in Indonesia lies with personnel of the MoF, it makes sense to draw on this specialized expertise instead of creating a new body and duplicating that knowhow in a separate organization.

3. New Role of PHPA

The planning and management of protected areas is severely hampered not only by financial constraints and limited manpower of government agencies but also by the vertical organization structure of PHPA. It is widely accepted that solutions for the protection of these areas are to be found outside the precincts of the protected areas in the context of local development. Hence a series of agencies and actors at local level need to become partners in planning and management.

In such a round PHPA's role would essentially be:

- to evaluate and monitor the integrity and the biodiversity of the protected areas.

- to identify genetic resources and to map environment with scientific assistance from LIPI.

- to identify people-park interaction (together with other resource users), specifically

  * to map resources and present land use

  * to map areas of conflicting interests

- to become a facilitator to function at village and community levels.

As far as skills are concerned **PHPA would need to develop greater horizontal links at province or district level to optimize coordination with local line agencies, district heads and local resource users.** New issues need to be addressed in protected areas management like integrated conservation and development planning, conflict resolution, community management, participatory rural appraisal, participatory planning, etc. PHPA staff should acquire these skills to deal with social and participation issues as facilitators.

As the issue of how to protect conservation areas is essentially a matter of conflicting resource use the development of new instruments/mechanisms should be encouraged and initiatives be supported that help resolve such conflicts.[21]

For the purpose of management planning PHPA staff at local level will have to have a thorough understanding of the ecological and socio-cultural conditions of the specific area to be protected. Research and inventories should therefore be initiated drawing largely on the expertise of universities. Research lags far beyond the needs of protected area management throughout the country. Increased research should also lead to sustained utilization of biodiversity and genetic resources.

To enable decisions to be taken by local PHPA representatives greater regional autonomy of PHPA management is essential. Greater regional autonomy requires the establishment of self-funding mechanisms (swadana) to cover costs for operational purposes. Local government at provincial and district levels make charges for their services. One of the largest sources of revenue from charges comes from regional hospitals and clinics which use the funds to operate the hospitals.[22] The introduction of a charge system for national parks would therefore seem to be consistent with what is practiced already at provincial level. Moreover, new ways of funding should be explored which would allow the private sector to get involved in co-financing (see also below No.6 of this chapter).

4. Institutional development

It needs to be recognized that PHPA, even after considerably strengthening its capacities, will never be in a position to impose conservation and protection all by itself throughout Indonesia. A series of other government and non-government agencies and local communities need to be involved and greater coordination of capabilities are required.[23] To improve the management of protected areas the emphasis should be on institutional development

---

[21] The University of Indonesia is currently conducting an Ecological Anthropology Research program which focuses on the analysis of processes and mechanisms by which conflicts between local forest dwelling people and logging concessionaires develop and how they are settled. Field work is done throughout Indonesia. (e.g. Tjitradjaja 1993).
The issue of resolving and managing conflicts in protected areas has also come to be an issue of international concern. IUCN is making efforts to compile the major lessons from throughout the world and has drafted some guidelines (Lewis 1993). Some guidance for designing protected area projects to reduce conflicts with local people is given by Caldecott (1991).

[22] See Keputusan Departemen Dalam Negeri No.445/2483/PUOD of June 1986, in particular Section IV. See also Nick Devas,1989. Financing Local Government in Indonesia. Ohio University, Monograph in International Studies.Southeast Asia Series No.84. Ohio.

[23] A particularly close cooperation is needed with Badan Pertanahan Nasional (BPN) with respect to land titling and land use issues ; with Min. of Transmigration with respect to the resettlement of forest encroachers; with Min. of Mining and Energy with respect to gold mining.

in its widest sense thus encompassing public and private institutions as well as NGOs. Yet it is premature to say now what institutional structure would best suit and fit Indonesia in the future to protect her natural resources.

The strategy recommended should therefore be to facilitate this process of institutional development by, above all, increasing interaction and dialogue among the stakeholders or resource users, for instance by stimulating problem-oriented "round-tables" at various levels of government.

The development of appropriate coordination mechanisms for planning and implementation at regional level needs to be promoted. It is essential that all major stakeholders are involved in land use planning/spatial planning, in the development of management plans and, as far as possible, also in the management of individual zones both within and around protected areas to establish a feeling of "stewardship". Management plans could become a tool to enhance coordination. They should be required for all types of protected areas and regular reviewing and updating be ensured.

Indonesia has realized the importance of such a strategy and is more inclined to consider alternative, innovative, institutional approaches aimed at decentralizing decision making and involving local resource users. The new institutional arrangements will require new legislation and new enforcement mechanisms which can be more cost-effective than approaches which frequently led to conflicts and inadequate protection.

5. Local communities

The idea of incorporating local communities into the design of protected area management schemes has been a recurrent issue. It is often considered the key to the success of conservation programs and projects. It is believed that local responsibility decreases the need for costly outside enforcement, that community management is adaptive and responsive to variation in local social and environmental conditions and changes in those conditions. Local community control is finally believed to bring a measure of stability and commitment to management.

Intensive awareness raising campaigns and strengthening of community structures (including local NGOs) need to be launched to enable local communities to take greater responsibilities in protected area management and to engage in dialogue with competing environmental actors. [24]

---

[24] In marine conservation which is characterized by a particularly great number of agencies involved, WWF is currently supporting a PHPA program in Eastern Indonesia aimed at developing a strategy to improve communication among the many actors involved. Improved communication is crucial in the context of the planning and establishing new marine parks.

This aspect has frequently been neglected in the past. Their participation in planning and management of these areas[25] can only come gradually as they succeed in organizing themselves and become competent partners in the round of competing resource users. Promoting trust-building activities aimed at rapid income generation will greatly support this process.

In practice it is far from easy to bring participation about. There is certainly no common approach for eliciting participation. The problem starts with identifying community representation. A guideline may provide a general orientation but eliciting participation "on the ground" must be worked out on a case by case basis.

Community participation is necessary but hard to obtain without first gaining community trust. For this concrete evidence needs to be provided that demonstrates that the protected area will benefit the people living in or around these areas. Apart from these initial trust-building activities aimed at rapid income generation village funds (possibly endowment funds) should be created to enable each community to manage some of its affairs independently from yearly allocations. Such funds could be generated from 'dana reboisasi', from donors or directly from the private side.The idea of creating a nation-wide funding mechanism, possibly through an independent foundation which may support the establishment of local-level endowment funds to be used by forest dwelling communities is currently being discussed and promoted by the World Bank in Indonesia.

The crucial issue will, however, be to identify persons and institutions who are able to act as facilitators. The few cases in Indonesia where such a process has been skillfully "orchestrated" but not steered are Arfak Mountains and Wasur National Parks in Irian Jaya and the Social Forestry Program in Java. What these cases all had in common is the fact that the services of professional "facilitators" were recruited.This professional support (e.g. larger national or international NGOs) seems to be particularly necessary if local community structures are not yet prepared to participate in dialogues with competing resource users. Local NGOs should be trained to become facilitators.

Support in the fields of empowerment (capacity building), bridging between population and government and advocacy should be provided to both traditional local institutions, such as religious groups, village communities, village councils, etc., and to modern institutions like LKMD/LMD (e.g. Wasur) or management councils as suggested for Bukit Baka-Bukit Raya National Park (Heppell 1993,

---

[25] The participation of local communities in the management of protected areas seems to be feasible in National Parks ("zona pemanfaatan tradisionil"), protection forests and Nature Recreation Forest Parks while their role is likely to be very limited in the management of Nature Reserves and Wildlife Sanctuaries.

p.58). Institutionalizing participation may take time and patience.

The involvement of local communities in the planning and zoning of the protected and surrounding areas from the outset of any intervention, specifically in discussing and devising management plans, seems to be crucial. [26] Their active participation is equally important in reaching agreements on boundaries and reserve regulations as well as on demarcating boundaries in the field (e.g. Arfak Nature Conservation Area; Kayan-Mentarang Nature Reserve).

These activities should assist the local population to build up and strengthen local institutional capacity needed to enable them to better look after protected areas in the future.

6. Private sector involvement

It seems essential to recognize that the demands caused by various forms of development on the resources in protected areas cannot be coped with by merely further strengthening and expanding the public sector agencies involved in the management of the protected area system. It is acknowledged that for financial reasons alone it is unlikely that the government will ever be in a position to ensure proper protection of the protected area system. Greatly increased investments will be needed in the future if Indonesia is to retain its major biodiversity assets.

Increased involvement of the private sector in conservation and sustainable resource management activities should be encouraged. A laudable initiative in this direction has been taken by P.T.Kaltim Prima Coal at Kutai National Park which together with 5 other private companies operating in or around the park is currently negotiating a co-financing arrangement of roughly US $ 3.0 million over 5 years with PHPA. Legislation to allow innovative strategies of private management of protected areas to develop would have to be amended. New forms of funding (e.g. community administered endowment funds) and flexible guidelines for funding protected area management schemes will also have to be investigated.

Private sector involvement should also be explored in the context of forest concessions which can provide an effective buffer against encroachment of adjacent protected areas. The idea of requiring the concessionaire to provide protection of the entire area, such as protected area and forest concession, is therefore quite intriguing (see also Wind 1991; Sumardjo et al. 1992).

---

[26] In order to avoid "enclave"-land use solutions, i.e. isolated village specific solutions unrelated from one village to the other from emerging a new concept of "usaha desa" (i.e. regional land use associations) is being discussed by the Department of Internal Affairs (Dept.Dalam Negeri).

7. Marine and coastal areas

The management of marine and coastal affairs is rendered quite complex due to the lack of integration and coordination of numerous national agencies with marine mandates. A super agency with an overall mandate as often suggested is unlikely to overcome the institutional bottleneck.More realistic seems to be **the creation of a "coordinating agency" for the management of marine and coastal areas at ministerial or subministerial levels in which only key stakehclders would be represented leaving the mandates of participating agencies largely untouched.** For the formation of such a body a Presidential Decree would suffice(see also Sloan and Sugandhy 1993). This coordinating agency should foster inter-agency collaboration and promote integrated coastal zone management (ICZM) programs. ICZM is a toolbox to develop coastal resources in a sustainable manner and to mitigate conflicts between users. There is no absolute methodology that can be prescribed to advise ICZM. However, there is a series of encouraging examples of ICZM throughout ASEAN countries that is of relevance to Indonesia and which may inspire the creation of similar programs in this country (Chua and Fallon Scura 1992).

8. Traditional land use rights

The state in Indonesia has traditionally adopted a custodial and exclusionary policy towards forests and forest dwellers. Still, the management of common property, such as protected areas, can, for financial and other reasons, not solely be left to the state.The community's role in preservation is likely to increase if the traditional rights of utilizing certain resources (deer, plants, etc.) in a sustainable way are legitimized. Well documented examples of such land use systems are damar (resin from Shorea javanica)forest gardens in South Sumatra (Michon 1991),jungle rubber in eastern Sumatra (Guyon et al. 1993), tengkawang (illipe nut) gardens of West and Central Kalimantan, impressive fruit forests of East Kalimantan ("lembo") (Michon and de Foresta 1990) and old rattan-enriched secondary forests in Kalimantan and Sumatra (Siebert et al.1992). They provide excellent protection in and around protected areas but are jeopardized in their existence among others because of lack of official recognition as a land use system in its own right. **The use and access of forest and marine commons in and around all protected areas should therefore be regulated by recognizing the multiple use of such areas by local communities and their traditional resource management systems.** This view seems to gain ground particularly at local levels. The experience gained so far in a few projects needs to be closely monitored and testing in other locations should be encouraged.

In the context of national parks a provision has been made for the establishment of a special traditional use zone. For the first time in Indonesia, at Wasur National Park this provision has been

applied in a flexible way to the extent that traditional collecting, planting and hunting is permitted throughout the park. Hence there is no sanctuary zone(or core zone) where no human activity occurs. For other forms of protected areas no such provision exists.The recognition and establishment of a sustainable traditional use zone requires extremely good communication and cooperation between PHPA, other forest departments, government agencies and the local community. Close monitoring is necessary to ensure that traditional internal regulations on harvesting of forest products are adhered to.

A common objection to management options that recognize traditionally sanctioned resource regulations is that the systems tend to break down under population pressure. Traditional land use systems should not be romanticized. Research in the outer islands of Indonesia has shown, however, that agroecosystems evolve and can support far higher populations than anticipated. Productivity of traditional systems can be increased if high yielding tree crops, for instance, are introduced into traditional forest "gardens".

In order to allow sustainable resource management systems in traditional use zones to develop further and even to be changed new forms of communal tenure, which maintain the close ties and responsibilities between the communities and their resources, should be investigated.[27] The implementation of such concepts implies evolving forms of resource use - (e.g. the development of new forest products) and a close coalition of interested parties (academic, government agencies, NGOs, private users and the community).

For local resource planning which should manifest itself in a management plan detailed maps are essential as well as collaborative research by NGOs and villagers about their land use, culture, migration, etc. Putting the plan into effect will require collaborative efforts between PHPA and the local community. This underlines the need for a strong community organization that can maintain the management of local resources thereby ensuring the protection of protected areas and acting as a liaison between the community, government agencies and other land users. Here NGOs can play an important role in professionally facilitating community organizations.

The recognition of traditional usufruct rights implies that communities currently residing in protected areas should not be removed against their will. Instead alternatives and incentives should be developed to stimulate emigration from protected areas.

---

[27] The "extractive reserve system" in Brazil may be of interest (see Zerner 1990, p62).

9. Independent monitoring and evaluation

To ensure that the rules of participatory resource management are adhered to and the protected areas are efficiently safeguarded **an effective monitoring and evaluation system needs to be established for ongoing independent review.**

Such a system, could consist of independent monitoring units attached to ICDPs consisting of university researchers, representatives from local government and national government agencies, NGOs, etc. This is similar to what is being planned for eco-labelling in Indonesia. A set of key indicators to monitor the impact of the projects in terms of biodiversity and socio-economic impacts would also have to be developed.

5.2 Elements of an Implementation Strategy

Drawing upon earlier discussions and findings, this chapter sets out the elements of an implementation strategy. At this stage of protected area development the emphasis should be on furthering learning processes, encompassing local and national government agencies as well as local communities and the private sector, rather than on adopting an approach that follows strict, still ill-defined, targets. This implies, above all, the support of a series of initiatives and pilot programs which focus on communication, dialogue and interaction of all actors as well as monitoring and evaluation of this process of institutional development.

From the analysis it became clear that given the great variety of local physical, cultural, economic and administrative conditions no blue-print approach can be taken in planning and management of protected areas in Indonesia. Within a given framework local solutions will develop. To ensure that the rules of participatory resource management are adhered to and the protected areas are efficiently safeguarded an independent monitoring and review system should be established, perhaps similar to what is being planned for eco-labelling Indonesia. To that end it is suggested to create a council consisting of representatives from government agencies, academe, private sector and NGOs. Its main task would be to oversee that the new more development oriented approach pursued in Indonesia's policy towards protected areas is implemented and provides effective protection on the ground. Moreover, this council would see to it that the information on this new approach is disseminated to the actors at ground level. Finally, the council would continuously evaluate the results, update the strategy and suggest the next steps to be taken. The work of the council could be supported in the form of technical assistance, e.g. setting up a monitoring system.

In view of the mounting threat Indonesia's protected areas are facing the emphasis is on steps that lend themselves for immediate

implementation. They have been grouped into four areas. No priority ranking has been attempted.

1. Ensure full involvement of local communities including local business in the planning and management of protected areas.

This means participation in decision making, in problem identification, in project design and implementation, and in project monitoring and evaluation. In order to establish a process of local participation, it is suggested to start by:

* mapping present resource use and conflict areas in and around protected areas whereby the staff of the local PHPA should perform a facilitating role. Short term training of PHPA personnel in techniques of participatory rural appraisal could be provided by larger Indonesian NGOs and universities, for instance the research group for agroecosystems (KEPAS). For detailed planning the experience gained with such an approach in the Java Social Forestry Program (JSFP) (see case study # 3) and in Long Uli Village, East Kalimantan (see case study # 19) should be drawn upon.

* mapping environmentally sensitive areas with the help of local universities and Environmental Studies Centers (PSL).

* involving local population in boundary demarcation. For this of particular interest is the experience gained in the Resource Rights Program in Jambi and Central Kalimantan (see case study # 2) with the strengthening of the boundary demarcation committees (Panitia Tata Batas) chaired by the Bupati whose members include village heads, BPN, and the Forestry, Agricultural and Transmigration Departments. The committee would crystallize the views of all stakeholders and demarcate boundaries based on existing land use.

* developing community forestry areas. Community forests and other resource management systems managed traditionally by local communities in a sustainable way in or around protected areas should be legitimized by the local Bupati or even by higher-level authorities. The two case studies of Keluru Village in Kerinci Seblat National Park (case study # 7) and the Social Forestry Development Project in Sanggau/West Kalimantan (case study # 1) provide concrete examples for further guidance.

These four concrete suggestions are considered as a first step only to ensure full involvement of the local community and local business in the planning and management of protected areas. Depending on the experience made with the implementation of these suggestions more activities would have to follow, e.g. the support of the development of resource management plans, local spatial plans and regional development plans for the area involving all stakeholders, and the strengthening of local community organizations with the help of professional trainers.

2. Redirect PHPA efforts in dealing with local communities and other actors.

The challenge of linking ecosystem protection with local economic development can only be met if government agencies, non-governmental groups, local resource users and private organizations seek close collaboration. A precondition of such a partnership is that PHPA field staff gets familiar with its new role of community development agent. This implies:

* training PHPA staff in new skills, e.g. participatory rural appraisal, participatory planning, conflict resolution, participatory monitoring and evaluation, with the help of professional facilitators. In order to enhance and update methods of improving communication with local resource users with new insights and tested formats, a working group within the MoF/PHPA should be created.[28] Approaches developed under the Java Social Forestry Program (case study # 3) and Wasur National Park (case study # 9) are suggested for closer study.

* expanding the ICDP approach currently tested in 5 national parks (under the "Penanganan Masalah Taman Nasional"-Program coordinated by BAPPENAS) to all national parks, thus providing more on-the-job training possibilities for PHPA staff to learn from. With facilitation of BAPPENAS, PHPA-staff and representatives of local government agencies are acquiring experience in developing pragmatic solutions for integrating protected area issues into local development.

3. Ensure that government programs support the protected area system.

* A greater share of the development efforts of government programs should be directed to the rural populations living in or adjacent to protected areas. As eliciting local participation takes time, especially if new local institutions are to be established, long term program, rather than short term financial inputs should be envisaged. Care should be taken, however, that these areas do not become overly attractive to people from outside which may lead to immigration and uncontrolled development.

* experience has shown that local responsibility for the resources to be protected can be enhanced or generated only gradually. The learning process needed should be supported by allocating more budgets directly to local government coordinating bodies (Bappeda I and II) rather than through central agencies like MoF.

---

[28] One should also draw upon the expertise that has been created already in the MoF (see footnote No.14).

4. Promote the development of support mechanisms.

As it is recognized that the government alone does not have the financial and personnel resources to provide adequate protection of the protected area system additional ways of funding should be explored. Immediate steps to be taken are to

* stimulate the increased involvement of the private sector in conservation and sustainable resource management. The arrangement which is currently being negotiated by a group of six companies located in and around Kutai National Park and PHPA may become a precedent for further initiatives.

* investigate new forms of funding, e.g. self-funding (swadana) through a charge systems for national parks, as widely practiced already with regional hospitals in Indonesia, or the establishment of local endowment funds for forest dwelling communities which be used to finance community-based activities.

Appendix 1: Consultant's TOR
A Study of Policy Toward Protected Areas in Indonesia

I. Introduction

As approved by the NRM Project Coordinating Committee, the Policy Secretariat is undertaking a study that analyzes policies toward protected areas in Indonesia. The purpose of this consultancy is to carry out this study. To do this recruitment of an international consultant with expertise in protected area policy in Indonesia is urgently required by the Policy Secretariat.

II. Tasks

The consultant will carry out the following tasks:

(a) After initial discussion on the framework of the study with the Policy Secretariat, GOI counterparts particularly MoFr (PHPA) and Home Affairs collect and analyze all existing information and data on protected areas in Indonesia and policies for them. In addition information from projects supported by donor agencies should also be collected and analyzed.

(b) Based on (a) propose a scope, approach, and methodology for the study.

(c) Carry out the study utilizing whatever resources are available and consulting with NRM/ARD, USAID and GOI counterparts.

III. Outputs

i) A draft final report of the study for discussion with USAID and GOI.

ii) Presentation of a draft and a final report to the Government and to USAID.

IV. Level of Effort

Up to 82 working days from October 1993 through to May 1994.

V. Reporting

The consultant will report to the NRM/ARD Chief of Party working closely with BAPPENAS and MoFr (PHPA) counterparts on a day-to-day basis. The final report will be submitted the NRM/ARD Chief of Party for forwarding to the Government and USAID.

VI. Qualifications

The consultant should have:

(1) a Ph.D. degree in natural resource management, conservation or an environmental related area.

(2) 10-15 years experience working in the general field of environmental management, preferably related to protected areas.

(3) at least 5 years working experience in Southeast Asia, with work experience in Indonesia preferred.

(4) good spoken and written English and preferably Bahasa Indonesia

Appendix 2: Major conservation projects currently supported by donors in Indonesia

The World Bank: Components of the Forestry Institutions and Conservation Project (FICP I and FICP II) loan packages (both still current) focus on investment for management and infrastructure development and/or improvement of altogether 15 national parks.

FICP I concentrated on information gathering and analysis. It included Gunung Leuser, Dumoga-Bone, Baluran (East Java) Bali Barat and Bromo-Tengger National Parks. These investments were supplemented by a World Bank supported buffer zone development.

FICP II moved closer to implementation and included (Package A) revision of National Parks Management Plans of 10 parks: Gunung Gede, Pangrango, Pulau Seribu (marine park) in Java: Way Kambas and Bukit Barisan in Sumatera; Tanjung Puting and Kutai in Kalimantan; Lore Lindu (Sulawesi); Manusela (Maluku) and Wasur and Teluk Cendrawasih in Irian Jaya.

Package B includes the revision of the National Conservation Plan of 1981-82 in the terrestrial and marine sectors while

Package C focuses on the sustainable and multiple use of mangrove forests with a management plan for a mangrove reserve.

Forestry III loan package is under preparation and may include a major initiative to promote the participation of forest dwelling and adjacent communities in sustainable management of production forests, conservation and protection areas.

At present the World Bank is involved in a major biodiversity investment which is expected to be funded through the Global Environment Facility and will include the development of the Kerinci Seblat National Park and the Kutai National Park, East Kalimantan.

The Asian Development Bank is providing support to the Biodiversity Conservation Project Siberut Island National Park and the Ruteng Grand Forest Park (Taman Hutan Raya) of Flores.

The Natural Resources Management Project (NRMP) of the U.S Agency for International Development comprises two nature reserves in Kalimantan (Gunung Palung and Bukit Baka/Bukit Raya) and the management and development of Bunaken Islands Marine Park in North Sulawesi.

The United States, Japan and Indonesia are supporting The Indonesian Biodiversity Conservation Program. The U.S component (US $ 20 million over 5 years)is to support the establishment of an independent, self-sustaining grant-making foundation whose grants will support regional and local biodiversity programs. Japan plans to assist biological resources research and in-situ conservation programs (up to US$ 20 million).

The European Economic Community is going to support the management and infrastructure of Gunung Leuser (North Sumatera/Aceh).

The World Wide Fund for Nature Indonesia Program (WWF) developed protected areas project concepts for a series of priority sites which are crucial for the conservation of biological diversity. They have, for instance, been incorporated into project profiles for the Biodiversity Action Plan. WWF has implemented innovative conservation and development approaches in the Arfak Mountains and at Wasur National Park of Irian Jaya. The great number of management plans and resource inventories made with the assistance of WWF continue to form the basis for investment by other agencies.

The Ford Foundation has supported the Java Social Forestry Program since 1987 which seeks to establish a new form of coordination and cooperation between the local communities and the State Forest Corporation PERHUTANI. The Foundation has supported social forestry activities in buffer zones of the Cyclops Mountains, butterfly farming among forest edge communities in the Arfak Mountains, both located in Irian Jaya. In Nusa Tenggara a consortium of government and non-government agencies has been formed in 1992 supported by the Foundation aimed at developing and implementing buffer zone activities in some of the most biologically significant protected areas of this part of Indonesia.

An innovative agricultural development program among forest edge communities surrounding Gunung Wanggameti reserve in East Sumba/Nusa Tenggara Timur has been supported by World Neighbors in cooperation with a local NGO for the last 12 years.

Appendix 3: Nature Conservation and Recreation Area, 1982

NATURE CONSERVATION AND RECREATION, 1982

Location	Nature Reserves	Wildlife Refuges	Recreation Parks				Total Area of Parks & Reserves	Percentage of Total Area
			Tourist	Hunting	Marine	Total		
	000 ha							per cent
Sumatera	429.9	2,551.8	28.8	200.3	2.6	231.7	3,213.4	27.06
Java	307.4	168.4	4.5	12.4	-0-	16.9	492.7	4.15
Kalimantan	1,871.3	511.6	0.4	-0-	-0-	0.4	2,383.3	20.07
Sulawesi	397.9	546.3	128.0	72.2	-0-	200.2	1,144.4	9.64
Bali/Nus.Teng.	4.1	127.6	5.6	44.4	-0-	50.0	181.7	1.53
Maluku	nd	nd	nd	nd	nd	nd	nd	nd
Irian Jaya	3,550.0	907.0	2.8	-0-	-0-	2.8	4,459.0	37.55
TOTAL	6,560.8	4,812.7	169.3	329.3	2.8	501.2	11,874.5 = ca. 119.000 km²	100.00
Percentage	55.24%	40.53%	1.43%	2.77%	0.02%	4.22%	100.0%	—

n.d. = no data given

Source:

Statistik Kehutanan Indonesia, 1984.

BEST AVAILABLE COPY

Appendix 4 a: Conservation Area by Categories, 1992/93

).11. REKAPTULASI KAWASAN KONSERVASI DI INDONESIA
SAMPAI DENGAN TAHUN 1992/1993

No.	JENIS KAWASAN KONSERVASI	Luas (ha)	Keterangan
A.	KAWASAN KONSERVASI DARATAN		
	1. Cagar Alam	6.111.458,33	
	2. Suaka Margasatwa	3.635.121,10	
	3. Taman Wisata	231.957,19	
	4. Taman Hutan Raya	211.934,00	
	5. Taman Nasional	5.617.437,00	
	6. Taman Buru	235.198,70	
	Jumlah A.	16.043.106,32	
B.	KAWASAN KONSERVASI LAUT		
	1. Cagar Alam Laut	253.780,00	
	2. Suaka Margasatwa Laut	66.120,00	
	3. Taman Wisata Laut	151.568,81	
	4. Taman Nasional Laut	2.284.955,00	
	Jumlah B.	2.756.423,81	
	TOTAL	18.799.530,13	

nber : Direktorat Taman Nasional dan Hutan Wisata, Ditjen PHPA (1993)

BEST AVAILABLE COPY

Appendix 4 b: Protection Forest, 1990/91

B.1. KEADAAN LUAS HUTAN LINDUNG DI TIAP PROPINSI DI INDONESIA DALAM TAHUN 1990/1991

NO.	PROPINSI	LUAS WILAYAH PROPINSI (Ha)	LUAS HUTAN LINDUNG MENURUT TGHK (Ha)	PERSENTASE TERHADAP LUAS WILAYAH (%)	LUAS HUTAN LINDUNG YANG DITUNJUK (Ha)
1	Di Aceh	5.539.000,00	1.051.406,00	18,98	558.832,00
2	Sumatera Utara	7.168.068,00	1.391.129,25	19,41	858.839,00
3	Sumatera Barat	4.229.730,00	1.206.624,00	28,53	1.094.681,00
4.	Riau	9.456.160,00	390.000,00	4,12	46.418,00
5.	Sumatera Selatan	10.277.500,00	774.700,00	7,54	405.758,00
6	Jambi	5.100.000,00	181.200,00	3,55	176.775,00
7.	Bengkulu	1.978.870,00	441.090,00	22,29	141.282,00
8	Lampung	3.201.545,00	336.100,00	10,10	314.858,00
9	DKI Jakarta	59.000,00	-	-	272.685,00
10.	Jawa Barat	4.630.000,00	229.454,64	4,96	322.250,00
11	DI Yokyakerta	317.000,00	3.245,60	1,02	72.163,00
12	Jawa Tengah	3.421.000,00	65.542,90	1,92	3.200,00
13	Jawa Timur	4.791.970,00	255.817,85	5,34	436.322,00
14	Kalimantan Barat	14.680.700,00	2.047.125,00	13,94	2.047.125,00
15.	Kalimantan Selatan	3.700.000,00	432.486,00	11,69	414.525,00
16.	Kalimantan Tengah	15.300.000,00	800.000,00	5,23	90.147,00
17.	Kalimantan Timur	21.144.000,00	3.643.860,00	17,23	3.626.300,00
18.	Bali	563.286,00	130.909,30	23,24	247.570,00
19	Nusa Tenggara Barat	2.015.315,00	481.681,80	23,90	1.071.250,00
20.	Nusa Tenggara Timur	4.738.920,00	677.601,00	14,30	1.122.406,00
21.	Sulawesi Utara	2.751.501,00	285.430,00	10,37	1.996.070,00
22.	Sulawesi Tengah	6.360.925,00	1.764.720,00	27,71	84.059,00
23.	Sulawesi Tenggara	3.814.000,00	420.795,00	11,03	524.394,00
24	Sulawesi Selatan	6.292.650,00	2.004.070,00	31,85	44.800,00
25.	Maluku	8.572.800,00	1.550.356,00	18,08	1.550.356,00
26.	Irian Jaya	41.066.000,00	8.648.610,00	21,06	5.711,00
27.	Timor Timur	1.460.937,00	435.277,00	29,79	435.274,00
	JUMLAH	192.638.877,00	29.649.231,34	14,89	17.964.050,00

Sumber : Direktorat Perlindungan Hutan, Ditjen PHPA (1991)

BEST AVAILABLE COPY

Appendix 5: Development of PHPA Budget and Area under PHPA Jurisdiction

Protected Areas

	Conservation area terrestrial (million ha)	marine	No. of parks	Protection Forests (mio.ha)	Development Budget PHPA (Rp.thousand)	Total PHPA Budget
1984/85	12.235	0.075	15		4.660.621	n.d.
1989/90	12.384	1.001	24		2.617.808	6.497.243
1992/93	16.042	2.742	31		10.118.572	26.495.065

Source: Directorate General of PHPA

Appendix 6: Conservation Policy Objectives in First 25-Year Plan and Repelita V

Conservation policy objectives

4.8 GOI policies affirm that all forms of natural life in the different ecosystems will be preserved for future generations.

4.9 The main policies on forest conservation are that:

- nature reserves will be established to conserve the flora and fauna;
- nature reserves will be managed rationally and wisely without jeopardizing their functions;
- natural resources and the living environment will be managed wisely to provide maximum social benefit;
- appropriate technology will be employed to sustain the high quality of natural resources and the natural environment;
- nature reserves will include coastal and marine areas as well as forest areas;
- extension and conservation education programmes will be conducted; and
- *ex-situ* conservation will be encouraged where appropriate.

4.10 The specific policy objectives of Repelita V emphasize the proper utilization of resources as well as the need to:

- ensure the conservation of animal and plant species, and their habitats;
- control threats to forestry and forest security;
- improve the management of conservation areas;
- increase people's and NGO participation in conservation efforts;
- further develop ecotourism to increase national income and foreign exchange earnings, and to improve employment opportunities;
- establish demarcation of conservation areas and buffer zones;
- intensify research and development; and
- improve training.

4.11 These policies point to the imperative of protecting and managing all forests in an appropriate and sustainable manner, which GOI has committed itself to achieve by the year 2000.

BEST AVAILABLE COPY

D.4. JUMLAH DAN LUAS HUTAN WISATA YANG DIKELOLA SWASTA DALAM TAHUN 1992/1993

No.	Lokasi Kawasan TAMAN WISATA	Pengelola	Surat Ijin Usaha		Luas (Ha)	Keterangan
			Nomor	Tanggal		
1.	Lau Debuk-debuk	Pemda TK. II Kab. Karo	65/IX/1972	-	7.0	
2.	Lembah Harau	Pemda TK.II Kab. Lima Puluh Koto	399/SLK/1986	-	27.5	
3.	Tangkuban Perahu (Jawa Barat)	Perhutani Unit III Jawa barat	133/Kpts/DJ/II/1980	14-07-1980	370.0	
4.	Kawah Kamojang (Jawa Barat)	Sementara Perhutani Unit III Jabar	133/Kpts/DJ/II/1980 973/578/Perek/1987	14-07-1980 03-07-1987	500.0	
5.	P. Pangandaran (Jawa Barat)	Kop. Rafiesia Karyawan SBKSDA Pangandaran	709/DJ-IV/1987 11/Kpts/BKSDA-III/6	03-06-1987	37.7	
6.	Telaga Sodas	Perhutani Unit III Pemda TK.II Kab. Garut	133/Kpts/DJ/II/1980 974.556/SK.2/Huk/85	14-07-1980 03-01-1985	23.85	
7.	Gn. Papandayan (Jawa Barat)	Perhutani Unit III Jawa Barat	133/Kpts/DJ/II/1980	14-07-1980 03-01-1985	221.0	
8.	Linggarjati (Jawa Barat)	Perhutani Unit III Jawa Barat	133/Kpts/DJ/II/1980	14-07-1980	11.5	
9.	Cimanggu (Jawa Barat)	Perhutani Unit III Jawa Barat	133/Kpts/DJ/II/1980	14-07-1980	154.0	
10.	Cantla (Jawa Barat)	Perhutani Unit III Jawa Barat	133/Kpts/DJ/II/1980	14-07-1980	95.0	
11.	Situ Gunung (Jawa Barat)	Perhutani Unit III Jawa Barat	133/Kpts/DJ/II/1980	14-07-1980	150.0	
12.	Jember (Jawa Barat)	Perhutani Unit III Jawa Barat	133/Kpts/DJ/II/1980	14-07-1980	50	
13.	Telaga Warna (Jawa Barat)	Perhutani Unit III Jawa Barat	133/Kpts/DJ/II/1980	14-07-1980	23.25	
14.	Telogo Warno/Pangilon (Jawa Tengah)	Perhutani Unit I Jawa Tengah	133/Kpts/DJ/II/1980	14-07-1980	39.6	
15.	Gn. Selok (Jawa Tengah)	Perhutani Unit I Jawa Tengah	133/Kpts/DJ/II/1980	14-07-1980	126.20	

Appendix 7: Recreational Forests Managed by Private Enterprises, 1992/93

BEST AVAILABLE COPY

No.	Lokasi Kawasan TAMAN WISATA	Pengelola	Surat Ijin Usaha		Luas (Ha)	Keterangan
			Nomor	Tanggal		
16	Tuk Songo (Jawa Tengah)	Perhutani Unit I Jawa Tengah	133/Kpts/DJ/II/1980	14-07-1980	6,8	
17.	Sumber Semen (Jawa Tengah)	Perhutani Unit I Jawa Tengah	133/Kpts/DJ/II/1980	14-07-1980	17,1	
18.	Tretes (Jawa Timur)	Perhutani Unit II Jawa Timur	133/Kpts/DJ/II/1980	14-07-1980	10	
19.	Gn. Baung (Jawa Timur)	Perhutani Unit II Jawa Timur	133/Kpts/DJ/II/1980	14-07-1980	195,5	
20.	Ranu Pani Regulo (Jawa Timur)	Perhutani Unit II Jawa Timur	133/Kpts/DJ/II/1980	14-07-1980	96,0	
21.	Grojogan Sewu (Jawa Tengah)	PT. Duta Indonesia Jaya	305/Kpts/Um/8/1969 974/240/1985	22-08-1969 09-05-1985	64,3	
22.	Plawangan Turgo (DI. Yogyakarta)	Dinas Kehutanan Yogyakarta	347/Kpts/Um/1975	20-08-1975	131,0	
23.	Bantimurung (Sulawesi Selatan)	Pemda TK.II Maros Sulawesi Selatan	179/Skpts/954/VIII/85	13-08-1985	18	
24.	Danau Kelimutu (Nusa Tenggara Timur)	Pemda TK.II Kab. Ende Nusa Tenggara Timur	3 Tahun 1984	-	5.356,5	
25.	Pulau Besar (Nusa Tenggara Timur)	PT. Sao Wisata	209/Kpts-II/1987	01-08-1987	300,0	
26.	TL. Maumere dsk (Nusa Tenggara Timur)	PT. Sao Wisata	209/Kpts-II/1987	01-08-1987	59.450,0	
27.	Kawasan Hutan Prapat Benoa	PT. Tourdevco	217/Kpts-II/1987	05-07-1987	40,0	
28.	TB/TWL P Moyo	PT. Moyo Safari Abadi	555/283/006	26-05-1989	40,0	
29.	TW.Panelokan	PT. Moncol Gurni (Rest Batugarden)		20-11-1975	150,0	
30.	TW Kawah Ijen Merapi Ungup-ungup	PT. Candi Ngrumbi	268/Kpts/DJ/II/1982	11-12-1982	30 000,0	
31.	Sebagian TB dan TL Pulau Moyo Propinsi Dati I NTB.	PT. Moyo Safari Abadi	313/Kpts-II/1992	04-03-1992	12 000,0	
32.	TWA Pelangan Propinsi Dati I Nusa Tenggara Barat	PT. Teluk Mekaki Indah	548/Kpts-II/1991	07-08-1991	200,0	

Sumber : Direktorat Taman Nasional dan Hutan Wisata, Ditjen PHPA (1993)

BEST AVAILABLE COPY

Appendix 8: List of Agencies Playing a Role in Marine and Coastal Management

National Indonesian Agencies and their Roles Relating to the Marine and Coastal Environment

Agency	Role
Ministry of State for Environment (LH) / Environmental Impact Management Agency (BAPEDAL)	national coordination of marine and coastal management and policy development; BAPEDAL manages the AMDAL (Environmental Impact Assessment) process
National Planning Board (BAPPENAS)	drafts, coordinates and implements national 5-year development plans (REPELITA)
Department of Home Affairs / Directorate General for Regional Development (BANGDA)	manages regional development policy, planning and coordination from the national perspective
Department of Agriculture/Directorate General of Fisheries	management, development and administration of fisheries and aquaculture
Department of Forestry / Directorate General of Forest Protection and Nature Conservation (PHPA);	marine conservation; mangrove harvest management; PHPA is responsible for marine protected area planning, designation and management
Department of Communications / Directorate General of Sea Communications	responsible for ports, shipping, navigational aids and safety; lead agency for marine emergency preparedness and response (e.g. oil spills)
Department of Mining and Energy / Directorate General for Oil and Gas	regulates oil and gas exploration and production over the sea bed and oil industry environmental safety
Department of Education and Culture/Universities	marine science education and research
Department of Security and Defence / Navy	security in territorial waters, hydrographic mapping
Department of Industry	administers industrial development/waste management
Department of Public Works	engineering coastal infrastructure and erosion control
Department of Tourism, Post and Telecommunications	marine tourism development
Indonesian Institute of Science (LIPI) / Research and Development Centre for Oceanology	marine research and scientific advice to other agencies
Ministry of State for Science and Technology / Technology Assessment and Application Board (BPPT)	natural resource inventory and evaluation
National Coordinating Agency for Surveys and Mapping (BAKOSURTANAL)	coordinates data on coastal and marine mapping from other agencies such as the Navy, etc.
Coordinating Committee for National Jurisdiction and Sea Bed Problem Solving (PANKORWILNAS)	marine boundries, jurisdiction and Law of the Sea issues
Coordinating Board for Marine Security (BAKORKAMLA)	security issues such as piracy, foreign fishing intrusion, pollution and smuggling

BEST AVAILABLE COPY

Appendix 9: Case Studies

1 Social Forestry Development Project, Sanggau

2 Resource Rights Program

3 Java Social Forestry Program

4 National Integrated Pest Management Project

5 Arfak Nature Conservation Area

6 Kerinci Seblat National Park integrated Conservation and Development Project

7 Keluru Village Forest Program

8 Rinjani National Park

9 Wasur National Park

10 Kayan-Mentarang Nature Reserve

11.Biodiversity Conservation Project Flores and Siberut

12 NRMP - Bunaken Marine National Park

13 NRMP - Bukit Baka - Bukit Raya National Park

14 Dumoga Bone National Park

15 Gunung Leuser National Park

16 Kutai National Park

17 Mangrove Conservation Project

18 Kepulauan Seribu Marine National Park

19 Mapping Community-managed Territories in Indonesian Forests

20 Integrated Management Plan for Coastal Resources of Segara Anakan Lagoon

21 Cyclops Mountains Conservation Area

Case study # 1

Name: Social Forestry Development Project (SFDP)

Location: Sanggau, West Kalimantan

Duration: 1990 - 1993 (1.phase); total: at least 10 years.

Funding: GOI/ GTZ (German Agency for Technical Cooperation)

Main features:

The purpose of the project is to enable "the rural population living in forest regions to apply agroforestry-based land use systems in an economically and ecologically increasingly sustainable way."

The first phase of the project is viewed as an orientation phase to test and develop pilot models to reduce shifting cultivation and reforest 60,000 ha logged-over concession area (54,000 ha forest and open land plus 6,000 ha protection forest). The major significance of this project has been its ability to negotiate an official decree (SK 196/ 1992) from the government of Kabupaten Sanggau recognizing the right of the local community living within the forest area to manage the concession as a HPH Masyarakat (Participatory Forest Management Area). This decree was issued prior to consultation with the community (DHV Consultants 1993, p.A 6-5). Preliminary steps have been taken to create a Supervisory Council (Badan Pengawas Pengembangan Wilayah Model Pengelolaan Hutan Partisipatif Kabupaten Sanggau as legally endorsed by the aforementioned decree), in which the local government, the Forestry Service and the local population (the future concession holder) are represented.

Project staff are now working with the communities of 6 villages in developing an institutional and management system for the area. The ZOPP methodology (participatory goal oriented planning) with local villagers, kecamatan, kabupaten and MoF staff is applied to increase the capacities of the local population to develop management plans for the area. The project also attempts to increase the capacities of extension institutions in promoting social forestry in selected locations in the Sanggau district.

In phase II (1993 - 1995) SFDP will focus inter alia on

- the development of appropriate reforestation models for areas with forest protection function, forest production function and agroforestry production function
- the design of a resource management plan for the PFM model area
- the design of a regional development plan for the PFMA model area and surrounding
- the initiation of participatory management structures
- the initiation of appropriate supervision mechanisms

Although the approach is restricted to a forest concession area it could also be applied to other types of land.

Sources:

Kuester, Ernst. 1993. Pengalaman lapangan dalam rangka penciptaan strategi perhutanan sosial di pedesaan Kaliman Barat. Dalam: Prosiding Seminar Sehari "Peranserta Masyarakat Lokal dalam Pengelolaan Hutan di Indonesia" Jakarta 9.Feb.1993 diselenggarakan oleh Program Pascasarjana Universitas Indonesia dan Direktorat Jenderal Pengusahaan Hutan, Departemen Kehutanan, Jakarta, pp.55-65.

Kalimantan. In: GFA (Gesellschaft für Agrarprojekte m.b.H.) (Ed.) Innovation and Development. Policies, Concepts and Cases for Agriculture and Forestry in International Cooperation. Kiel. pp.15-25.

DHV Consultants, Integrated Conservation and Development Project (ICDP) Kerinci Seblat National Park. Case study. Jakarta 1993.

Case study # 2

Name: Resource Rights Program

Location: Jambi and Central Kalimantan

Duration: 1993 -

Funding: GOI/ ODA (U.K.)

Main features:

(Largely drawn from DHV Consultants 1993a, Annex 6). This program addresses sustainable forest management in Production Forests (KPHPs) by local people. It is seen as a viable alternative to converting (degraded) natural forests to plantations. The concept involves leaving the land permanently as productive forests, recognized as such by all land users in the vicinity, enabling the boundaries to be established. The concept also requires that each KPHP should be a viable business unit and that the users' rights and boundaries of the forest are clearly established. At the moment, rights and boundaries are rarely clear which results in villagers and others using forest resources in an indiscriminate, unsustainable way.

Fixing forest product utilization rights and KPHP boundaries is pivotal in the program. At the same time it is necessary to obtain agreement from all involved parties about the status of the area as permanent production forest. To do this, the program uses a process of consultation, negotiation and consensus building, the objective of which is the universal approval of both the precise location and the status of the land which is contained within them. The boundary demarcation committee (Panitia Tata Batas) chaired by the Bupati whose members include village heads, BPN, and the Forestry, Agriculture and Transmigration Departments is central in boundary demarcation (for the institutional relationship of this committee see following diagram). So far this committee has tended to merely endorse the forest boundary demarcations established in the field by INTAG, a special section of the Kanwil Kehutanan at province level.

The project intends to strengthen the committee in its original function as controller and boundary demarcator by crystallizing the views of all stakeholders. The committee would thus walk the boundaries together with the stakeholders and demarcate boundaries based on existing land use. Following this, boundaries are fixed and management plans are drawn up which involve a 35-year cutting cycle, designation of blocks and production forecasts. The net effect of this approach to sustainable forest management is gaining both institutional and local agreement concerning the boundaries and status of KPHP and to establish production units in which all parties agree to respect the boundaries, stop illegal logging and encroachment.

The concept is being tried out and further developed by ODA in a few pilot areas since 1993. Although the program is restricted to forest land it could also apply to other types of land. The Panitia Tata Batas could also provide a useful institutional model for demarcating the boundary between protected areas, community land, tree crop estates and forest concessions.

RELATIONSHIP OF THE GOVERNMENT, PRIVATE & NGO ORGANIZATIONS TO KPHP IMPLEMENTATION

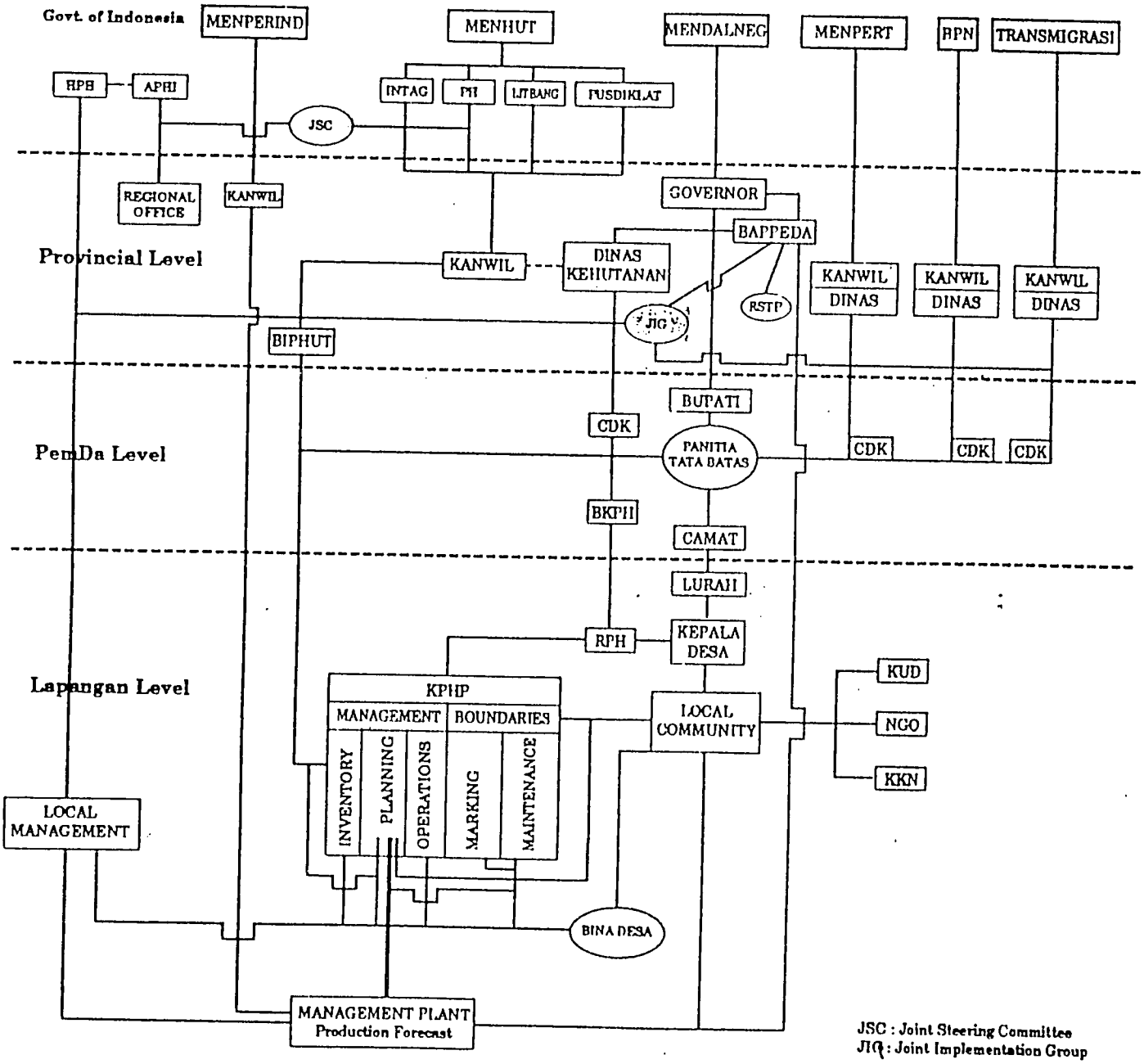

BEST AVAILABLE COPY

Case study # 3

Name: Java Social Forestry Program (JSFP)

Location: Throughout Java

Duration: Since 1986

Funding: Perum Perhutani (State Forest Corporation - SFC))/ Ford Foundation

Main features:

The JSFP was started in 1986, when the SFC started to implement 13 pilot projects in which social forestry concepts were to be applied throughout Java. For some time prior to that change of policy the SFC had already been engaged in social forestry programs, starting with the Prosperity Approach , the Mantri-Kehutanan - Lurah Desa (MA-LU) system and the Pengembangan Masyarakat Dalam Hutan (PMDH) (Development of Forest Community Program). Perhutani was attempting to introduce a new approach to forest management in Java. The modifications implied new agroforestry techniques. Under the tumpang sari system used in Indonesia since the second half of the last century farmers were granted access to forest land and allowed to cultivate annual crops in between the tree seedlings in exchange for site preparation, planting and tending the forest trees. Usually after 2 to 3 years when the trees had gained a certain height and the tree canopy closed, no more farming was allowed.

In the late 1980s the system was modified. Farmers were allowed to plant crops which were previously not allowed on tumpang sari plots. They had more time for their crops because the timber tree species are spaced more widely. Thus farmers could plant until the timber is harvested. More significant has been the change of the relationship between the SFC and the farmers. With the help of a big NGO, Yayasan Bina Swadaya, training was provided to Perhutani field staff to change their behavior and to enable them to adopt the role of community development agents rather than as police officials. Farmers are organized into Forest Farmers Groups (Kelompok Tani Hutan) and enter into management agreements with SFC on a collective basis. The program has been expanded to include media development and consulting services provided by Bina Swadaya staff seconded to provincial Perhutani offices and the strengthening of Perhutani's training center in Madiun.

Currently Bina Swadaya is trying to facilitate collaboration between Perhutani and local NGOs who could provide assistance to the forest farmer groups. The NGOs are mainly assisted in the field of empowering and bridging.

Sources:

Arihadi, Y.1993. Social Forestry in Java. A Compromise that is Working. In: Forests, Trees and People Newsletter No.20, April 1993: pp10-14.

Kartasubrata, Junus et al.: Research Support to Perhutani Social Program on Forest Land in Java 1984 - 1992. Center for Development Studies. Bogor Agricultural University. Bogor 1993.

Yuniati, Sih: Pembinaan Peran Serta Masyarakat dalam Pengelolaan Pemanfaatan Hutan Melalui Progam Perhutanan Sosial. (Suatu Rangkaian Pengalaman Bina Swadaya). Jakarta, 1993.

Witoelar, Wimar: Java Social Forestry Program Institutional Evaluation. Final Report. Jakarta 1991

Peluso, Nancy Lee: Excerpts from the Evaluation of the Java Social Forestry Program.(Unpublished) Jakarta Dec.30, 1991.

Peluso, Nancy Lee et al.: Reorienting Forest Management on Java. In: Poffenberger, Mark (ed): Keepers of the Forest. Land Management Alternatives in Southeast Asia. Manila 1990, pp.220 - 236.

Arihadi, Y. Social Forestry in Java. A Compromise that is Working. In: Forest, Trees and People Newsletter No.20, April 1993, pp. 10-14.

Case study # 4

Name: National Integrated Pest Management Project (IPMP)

Location: Nationwide

Duration: Since 1989

Funding:

Main features:

The IPMP has developed an impressive program of Ministry of Agriculture (MoA) staff and farmer training in IPM. It has captured farmers' interest and enthusiasm and, coupled with adjustments in pesticide policy, has resulted in substantial reduction in pesticide usage on rice, with no reduction in rice output. The project has been very successful in development and application on a significant scale, an experiential learning approach. Farmers can use their knowledge and understanding of an agro-ecosystem of their rice field to make rational crop management decisions based on their own assessment of physical conditions.

The project encompasses activities in the following fields:

1. The institutional and policy support includes assistance for strengthening the national project administration, for monitoring and evaluation, establishment of a Pesticide Information Unit. It includes funds for university training for fulltime program field managers.

2. The organizational design of the project includes:
   - inter-ministerial coordination, policy oversight and input mobilization from BAPPENAS
   - decentralized management of field activities within MoA
   - building supportive links with local government for planning and funding of field activities
   - increased reliance on farmers'organizations for village-level institutionalization and dissemination.

The central management structure includes an advisory board, a steering committee, a working group and a central secretariat.

Source:

DHV Consultants: Integrated Conservation and Development Project (ICDP) Kerinci Seblat National Park. Case study 1993.

Case study # 5

Name: Arfak Nature Conservation Area

Location: Irian Jaya

Duration:

Funding: WWF

Main features:

In 1982, 45.000 hectares of the area were declared strict nature reserve. In 1987, a WWF team recommended to change the status to nature reserve (kawasan konservasi alam) with a total area of 65.300 hectares. It was found that the area could no longer be protected against encroachers unless the local population become fully involved in the planning and management of the area, under the guidance of PHPA, and was able to freely practice their ecologically friendly forest-based economic activities.

In 1988, WWF actively promoted the creation of 13 conservation village management committees (KPSA) composed of Hatam elders who signed agreements concerning the conservation of the Arfak Nature Reserve with WWF/PHPA. Based on these agreements the local population (Hatam people) became involved in:

- the demarcation.of the reserve boundaries
- the development of an agroforestry buffer zone in which economic and non-economic incentives (butterfly farming, home gardening) were used.
- the management of sections of the reserve
- the placing of signs indicating conservation area
- the control of the access to the reserve by outsiders
- further regulations chosen and enforced by Hatam conservation management committees.

It seems that the people see the importance of actively participating in forest management and decision making if they are allowed to secure their land tenure in the mountains.Community participatory management of the conservation area has benefitted from the enthusiastic local project personnel who have maintained its momentum. Bureaucratic involvement has remained low.
Local communities which have played a role in determining and marking the western boundary of the reserve have obeyed the regulations and boundary lines. In contrast, the boundary on the eastern side of the Arfak reserve, marked by BIPHUT without community participation, has been plagued by infractions of the rules, including farming within the reserve and destruction of the marker posts (Zerner 1990).

Sources:

Womsiwor, Daud; Nevilla, Duncan; Mandosir; Sius, Pengelolaan Kawasan Penyangga Pada Cagar Alam Pegunungan Arfak, Manokwari, Irian Jaya. In: WWF (1990), Prosiding Seminar Nasional Pengelolaan Kawasan Penyangga, Jayapura tgl.16-17 Oktober 1990, pp.121-135.

World Wide Fund for Nature (WWF) 1987. Arfak Mountains Nature Conservation Area, Irian Jaya Management Plan 1988-1992. Bogor.

World Wide Fund for Nature (WWF) 1988. Pemanfaatan Sumberdaya Hutan Pegunungan Arfak Secara Lestari: Suatu Metoda Pengelolaan. Paper presented at Seminar Implementasi Rencana Pengelolaan Kawasan Pelestarian Alam Pegunungan Arfak, Manokwari 12 Abril 1988.
World Wide Fund for Nature (WWF) 1993. Hatam Community Management Committees. In: Conservation Indonesia Vol.9, No.2, 1993: p.9.

Case study # 6

Name:	Kerinci - Seblat National Park Integrated Conservation and Development Project (KSNP-ICDP)
Location:	Jambi, Bengkulu, South Sumatra, West Sumatra
Duration:	25 year ICDP-process suggested to obtain a "sustainable" park
Funding:	Project financing will probably be through IBRD loan, IBRD grant, GEF grant and GOI. The total will be about US $ 28 million. The current preparation of the project is covered by a UNDP grant.

Main features:

A preparatory study was completed in June 1993. The purpose of that study was to prepare an ICDP-model for the Kerinci-Seblat National Park and surroundings and to elaborate a conceptional approach to biodiversity conservation and to define the conceptional and strategic framework of the ICDP.

A World Bank facilitation mission assisted in the ICDP preparation from July to September 1993 by providing further information on ICDP components and on strategies to deal with issues of resettlement and intrusions.

In order to save Indonesia's largest National Park urgent action is required, particularly in the fields of encroachment control, boundary establishment and enforcement and resource right rationalization. The park is said to have one of the largest enclaves in the world. About 8000 families are converting large portions of the park into cash crop estates (coffee and cinnamon).

No definite project concept has been approved yet, as a number of activities will need a long process of design, learning, redesigning and experimentation before full-scale implementation is possible. The project has turned out to be particularly complex as it encompasses four provinces with nine kabupaten, 250 villages and a great number of implementing agencies.For an initial phase of 5 years the consultant suggested to implement the following components:

1. Strengthening ICDP management, inter alia in the field of project coordination and monitoring.

2. Regional/spatial planning: Strengthening the planning capacity in the project area (problem: lack of detailed spatial plans).

3. Resource right rationalization: Removing the current uncertainty about resource rights. For this national level guidance is required, for instance in the field of dispute resolution and park boundary rationalization.

4. People/park interaction: Strengthening local area planning, inter alia through incorporating conservation considerations in local planning, resource rights rationalization and local area development, involvement of local communities, local government, strengthening of village level planning capacity.

5. Park management including park boundary enforcement, biodiversity inventory etc..It is proposed to explore new ways to undertake park management and to collaborate with NGOs and with the private sector.

6. Forest concession management: Logging schemes surround the park in a 2 - 20 km wide layer.of production forests. Concession management is to be improved. Community forestry in logged-over areas is to be introduced.

On the basis of the study a series of further suggestions developed. No final decision has been taken yet as to the format of a GEF supported biodiversity project. Of these suggestions the following seem to be of particular interest:

1. Implementing arrangements:

   Project Coordinator at central level: BAPPENAS, chairing the steering committee that includes a number of key sectoral agencies

   Coordinator at provincial level: Bappeda I, chairing a task force that reports to the Governor

   Coordinator at Kabupaten level: Bappeda II, chairing a task force that reports to the Bupati.

2. Regional planning
   A comprehensive spatial plan for the entire area is needed to include a development plan for the park for which the existing PHPA park management guideline (PHPA 1993) provides a format, and a development plan for the area bordering the park. For this park buffer zone provincial level spatial plans need to be developed that focus on the provincial capitals rather than on the park.

3. Local area development
   In addition to infrastructure development that supports growth centers in the development region enterprise development activities are strongly suggested. The latter would focus on specific target groups (park encroachers, landless laborers living in the buffer zone) as well as on special credit based incentives for enterprise development, skills training and marketing support.

Sources:

DHV Consultants, WWF, 1993. Integrated Conservation and Development Project ICDP) Kerinci Seblat National Park. Project Brief.

Background Reports consulted:
3. Local Area Development and Resource Rights Rationalization
4. Micro-Regional Development and Planning
7. Participation and Promotion
10. Concepts and Strategies in Designing ICDP for Protecting Indonesian Biodiversity Assets

WWF. 1993. The Enclave Dilemma in Kerinci Seblat National Park. In: Conservation Indonesia vol.9, No.1, Jan-March 1993.pp.17-18.

Case study # 7

Name: Keluru Village Forest Program

Location: Keluru Village, Jambi Province

Duration:

Funding: GOI/ WWF

Main features:

A 28 hectare customary woodlot (Tanah milik adat Keluru-TMDK) at Temedak managed on the basis of traditional customary rules established in 1927 by consensus of the traditional adat leaders. In 1934 Dutch colonial authorities officially registered the forest as belonging to Keluru adat leaders thereby restricting claims by outsiders to the traditionally managed area. The Keluru woodlot seems to work well. In the late 1980s it was studied extensively and in 1990 it was decided to start a "village forest program" based on the Keluru model.

Boundaries were marked in the field and the land was mapped by the villagers with the help of WWF. Official certification of traditional land use rights was done by BPN.

Based on this experience a decree of the Bupati of kabupaten Kerinci in 1992 officially endorsed the Keluru cultural forest (hutan adat) as part of the management of the buffer zone of KSNP. Along with this decree 11 regulations have been adopted by the community to protect the Temedak Forest. These regulations clarify community rights and obligations in the management of Temedak and also establish the fines and compensation in case of infringement.

The Keluru Forest has become a model of people participation using local cultural wisdom for the utilization and conservation of nature. The Bupati has encouraged other villages to establish their own cultural forests.

For details:

Keluru Cultural Forest: Kerinci Traditional Wisdom and Conservation. In: Conservation Indonesia (WWF)vol. 9, No. 1 1993: 21.

DHV Consultants, WWF, 1993. Integrated Conservation and Development Project ICDP) Kerinci Seblat National Park. Project Brief.

Case study # 8

Name: Rinjani National Park

Location: Lombok

Duration:

Funding: WWF provided support for a workshop

Main features:

In 1990 the strict Rinjani Nature Reserve (Suaka Margasatwa) was officially reclassified and changed to Rinjani National Park (41.330 hectares). Encroachment of the park has reached an alarming degree. In August 1993 a workshop was held in Mataram with all major stakeholders on how to increase the participation in conservation activities of the park and the surrounding zone (about 85.000 hectares) consisting of protection forest, production forest, limited production forest and recreation reserve.

The workshop emphasized the need for

- the development of coordinating mechanisms concerning the management of the core area (e.g. National Park) and the surrounding area involving all major stakeholders
- the strengthening of community structures
- the identification of economic activities (small scale enterprises, agro business)
- participatory agroforestry
- the support of traditional institutions beneficial to the environment
- the participation of the local communities.

Source:

Rumusan Hasil Lokakarya Peningkatan Peran Serta Masyarakat dalam Kegiatan Konservasi Taman Nasional Rinjani, Nusa Tenggara Barat. 12 - 13 Augustus, 1993.

Case study # 9

Name: Wasur National Park

Location: Irian Jaya

Duration:

Funding: WWF

Main features:

On the park fringes there are about 65.000 people living in urban areas, while inside the park's 13 villages 2.550 people live of whom about 2.000 are traditional inhabitants. Each clan and family has traditional sites called "dusun" where hunting, gardening and spiritual matters take place. All land is claimed by WWF together with a local NGO, Yaspel, which landowners found out when they met hundreds of "dusun" sites in the 413.810 ha of the park.

To enable the local population to access their "dusun" an agreement was reached at a workshop held in September 1992 attended by all major stakeholders (government, private and non government). The workshop was convened to assist the development of the Wasur National Park Management Plan. Agreement was reached on zoning, particularly on the establishment of a traditional use zone, the first for Indonesia based on Conservation Law No. 5 of 1990.

The workshop engendered decisions, for instance, that required settlers and cattle ranchers to leave the park. Based on this meeting and research work it was decided that the entire park become a traditional use zone, where only customary-like, traditional style hunting is allowed and restricted to local traditional people.

Organization

The Community's longterm involvement is expected to be secured through government village organizations (LMD) which are being strengthened to increase economic activities. They provide a forum for decision making, management and planning of activities. These councils have direct and regular contact with ranchers and higher ranking park staff. Two members of each council will be on the planned park residents' advisory body which will meet twice a year to provide input to the park administration at the highest level.

The advisory body will also be the executive of the National Park NGO. The latter will focus on National Park compatible community development in the thirteen villages inside the park, including marketing, monitoring, and financial management. It started work in July 1993 under the umbrella of the locally successful NGO Yaspel. After two years the national NGO will obtain its own legal status. WWF will then hand over the community development work to this NGO.

To strengthen the Wasur National Park Management the suggestion was made at the workshop to upgrade it to a National Park Authority (NPA).

Regional Development

The park has been acknowledged by local government in regional planning consequently, the Bupati of Merauke decided to create a new kecamatan that includes only the park. The interrelatedness of park development and regional development is fully understood and recognized. Economic activities such as kayu putih aromatic oil harvesting and processing, orchid cultivation and assisting tourism efforts are promoted.

The Community's involvement in the preparation of the Park Management Plan through awareness programs, discussion forums and the like are essential elements of the approach.

In order to strengthen the villagers' self support efforts and thereby also the management of the park it was felt that more detailed research needs to be done concerning implementation of legislation on village government structure and on village area development.

Sources:

Craven, Ian. 1993. People Participation in Wasur National Park. In: Conservation Indonesia Vol.9, No.2, 1993: pp.13-14.

Craven, Ian. 1993. People Participation in Wasur National Park. In: Economic and Business Review Indonesia No.79, October 16, 1993, pp.32-33

WWF 1992. WWF Project ID0105 - Development of Wasur National Park. Recommendations of the Wasur National Park Workshop in Merauke Sept. 17-19, 1992.

Case study # 10

Name: Kayan - Mentarang Nature Reserve

Location: Kalimantan Timur

Duration:

Funding: WWF

Main features:

The objective of this project (started in 1990) is to develop a longterm conservation management plan integrated with sustainable economic development at a regional planning scale. Integral elements of the plan are cooperation with and participation by local communities in the use of scientific methods as a basis for decision making. About 10.000 Dayak people living in and around the protected area (cagar alam), near a remote part of the Indonesian/Malaysian border, practice forest/fellow shifting cultivation.

Rights to land are held individually within village territories, which also include community "protected forests" (tana ulen) which are protected but not cleared. Access to these areas is regulated under adat (customary law).

The area was made a strict nature reserve of 1.6 million hectares in 1982 but no management activities were planned or implemented until 1990. A resettlement project aimed at stemming out-migration from the border area in the early 1980s together with regular village development programs (Bangdes) have been carried out by the government. Some parts of the reserve boundaries were marked by Biphut without consulting the KSDA, about the time the WWF project began. There is no PHPA staff in the reserve.

The overall goal is to establish a protected area system that benefits and is supported by local communities. The system as envisaged will include a large, uninhabited core zone surrounded by various "traditional use" or limited exploitation zones and a support or buffer zone, all in the context of a national park. Management of the use zones and buffer zone will be based in part on traditional elements, such as the community protected forests under adat regulation together with economic development initiatives and scientific research and monitoring. New boundaries in zones must be established and management plans developed with participation by local residents, government agencies, and private enterprises.

Surveys and research have been conducted by WWF with LIPI and others on many aspects of land use and forest use, including farming, hunting, medicinal plants, rattan collecting and management, history of settlement and migration, and related cultural themes from adat and oral literature. This has involved mapping of customary lands and forest resources together with analysis of inconsistencies and overlap of these with the existing forest use zones. A field staff has been established, including a "community cooperation team" that works with residents and local government officials to discuss conservation and development issues, map resources and resource use (together with a small mapping team), and plan conservation management at the local community level.

PHPA has accepted in principle the proposal to make Kayan-Mentarang a national park, within revised boundaries and zones based on cooperation with local communities.

Problems

Outsiders (people not residing in local communities) frequently enter community forests and the nature reserve to collect forest products without permission from or giving compensation to the traditional owners. Government does not support adat rights to these lands. Similarly, community forests within logging concessions are not recognized. Roads are planned through parks of the reserve and community forest lands.

There is inadequate participation by PHPA in the field owing to a lack of staff. Furthermore, KSDA staff are not trained to work with communities.

Coordination among government agencies is poor. There is little NGO activity in the area other than the churches and WWF.

Sources:

Jessup, Timothy C. and Bernard J.L. Sellato, 1993. Culture and Conservation in East Kalimantan. Report on the first phase of training and field work, 1991-1992, in the Kayan Mentarang Nature Reserve and Vicinity. n.p.

Jessup, Timothy C.; Herwasono Soedjito; Kuswata Kartawinata, 1992. The Proposed Kayan Mentarang Biosphere Reserve: A New Approach to Conservation and Development in East Kalimantan. WWF. n.p.

Puri, Rajindra K. 1992. Mammals and Hunting on the Lurah River: Recommendations for Management of Faunal Resources in the Cagar Alam Kayan-Mentarang. Preliminary Report. Samarinda.

WWF, 1992. Conservation Management in the Kayan Mentarang Nature Reserve, East Kalimantan, Indonesia, 1993-1995. A proposal by the WWF indonesia Program to the European Community. Jakarta.

Case study # 11

Name:	Biodiversity Conservation Project Flores/Siberut
Location:	West Flores NTT and Siberut Island (West Sumatra)
Duration:	6 years (starting 1993)
Funding:	Asian Development Bank (loan US $ 24.5 million). Total cost: US $ 40.8 million.

Main features:

The project aims at conservation of forest lands and the ecosystem while at the same time helping to institutionalize biodiversity conservation and management activities on a self-sustaining basis. Direct beneficiaries of the project will be an estimated 26.000 families living within the vicinity of the protected areas.

The Integrated Protected Area System (IPAS) approach as originally suggested by the appraisal mission (Deutsche Forest Consult et al. 1992) was similar to what is currently attempted in Indonesia with ICDP and which gives responsibility for coordination to BAPPEDA I and II in the provinces and districts. Institutionally this project did not, however, emulate the ICDP idea. PHPA will be the executing agency and will have overall responsibility for project implementation and coordination. At the project sites, implementation will be carried out by project management units (PMUs) headed by full time project managers from PHPA, staffed by personnel from regional forestry and associated departments, and assisted by a team of consultants and local NGOs. The project will strengthen the institutional capability of PHPA, specifically the monitoring and inspection capabilities of the agency. Boundaries will be delineated through a participatory and mutually acceptable approach. Local communities will be provided with income generation opportunities in the buffer zone in adjacent areas.

The success of the project will largely depend on the participation of rural communities at each project site. Obtaining this will require sustained, village-level inputs in the form of education, awareness-raising, participatory planning, guidance and assistance to aid the introduction of new ideas and procedures. It is for this reason that an integrated community awareness, mobilization and extension program (CAMEP) will be launched at each project site. CAMEP will emphasize environmental education, conservation awareness, social forestry and agroforestry extension, tourist guide organization and training, marketing of products, introduction of new techniques and assistance with the definition of village development priorities.

An important feature of CAMEP is the use of part time project employees at the village level, to act as longterm contacts for the project, whose role will be to transmit information from the project to the communities through a day-to-day contact with the members of the household groups (comprising 40 to 60 households per group) and to transmit reactions, perceptions and concerns from the communities to the project. In addition desa development advisors will be required to mediate between the village level and the project management and its technical advisors. They will help each household group devise a local development plan in accordance with project objectives. They will help identify the need for specific inputs by the project to each

village and will participate in the presentation of advice, training and extension services to the local inhabitants.

The CAMEP will be preceded by a preliminary awareness program (PAP), the aim of which is to sensitize communities that are likely to be affected by the project to the nature and aims of the project, while also identifying the first group of potential recruits among the local inhabitants, who can later be employed under the CAMEP.

Sources:

Deutsche Forest Consult, Germany and PT Hasfarm Dian Konsultan. 1992. Management and Conservation of Tropical Forest Ecosystems and Biodiversity. Final Report. Project T.A. 1430-INO of the Asian Development Bank and the Directorate General of Nature Conservation and Forest Protection, MoF.Jakarta.

Asian Development Bank, 1992. Appraisal of the Biodiversity Conservation Project in Flores and Siberut. Manila.

Case study # 12

Name: Natural Resource Management Project (NRMP)

Location: Bunaken National Park, North Sulawesi

Duration: 1992 - 1997

Funding: USAID (US$ 18.5 million.)/BAPPENAS/MOF. Total cost: US$ 36.0 million.

Main features:

The project is aimed at developing improved policies and practices for managing natural resources in order to support continued economic growth. One of two components of the project is the field testing of policies and viable approaches for the multi purposes management of protected areas (both terrestrial and marine). Bunaken/North Sulawesi was chosen as a marine testing site.

The management of the park, one of the finest marine parks in Indonesia, encompasses many of the features encountered also in other marine parks in Indonesia, including:

- substantial indigenous population (nearly 20,000 persons) living within the park
- intersectoral disputes of jurisdiction, particularly between local and central government agencies
- heavy pressure from the commercial sector for tourism development
- uncontrolled and unsustainable utilization of coastal marine resources, due to lack of sense of ownership and thus lack of incentive for sustainable management. The park is threatened by:
  * harvesting of live coral by local people for the use as building material
  * overfishing and use of destructive fishing techniques in harvesting reef fish
  * uncontrolled harvesting of mangrove forests
  * the loss of coral habitat due to indiscriminate anchoring
  * pollution from local communities and tourism development

Given the inadequate resources to manage the park the local PHPA office has realized that the full involvement of the local communities, NGOs and the private sector (in particular the marine tourism operators) and the local government is essential. A series of activities are being pursued, among others:

- conducting baseline studies of the parks habitats and socio-economic profiles of communities within and surrounding the park.
- sponsoring detailed thematic mapping of the park.
- assisting PHPA staff and NGOs with regular visits to the park for applied research and establishing close contacts with local communities.

- training in conservation, field skills, production of public awareness materials, community organization.

- developing a strategy for the production of public awareness materials and its implementation.

- formulating a management plan for the national park as a result of a process of discussion involving PHPA, local communities, NGOs and other key players. To date 5 meetings have been held over a period of two years. Agreement has been reached with the private sector to abstain from building major hotels within the park.

Special efforts are planned to elicit the cooperation of local communities. For this a series of activities are planned among others:

- village or dusun level community forums

- an information center and the production of public awareness materials

- development of patrolling procedures involving community and PHPA personnel

- establishing community reef sanctuary areas for coastal villages to enhance local reef fisheries

- promoting local participation in tourism development in the park and other income generating activities (aquaculture, handicraft)

- discussion of the proposed management zones (suggested in the draft management plan) and their feasibility.

The management plan, one of the first for marine parks in Indonesia, is nearing completion and is expected to be submitted for final ratification by the Minister of Forestry by mid-1994. The project will then focus its activities on the implementation of the plan. Key elements of the proposed plan include:

- establishing the three primary functions of the park: conservation, supporting the livelihoods of local communities and tourism.

- establishing a multi-sectoral coordinating committee (once the management plan is ratified and agreement is reached on zoning) for reviewing and planning strategic management of the park.

- establishing community groups to assist with creating and enforcing zonation of the park including village core zones to enhance renewable resource use (e.g. fisheries).

- promoting requests for development projects from local communities and supporting these as much as feasible, e.g. improved agricultural activities, handicraft and tourism facilities.

- promoting active participation by local tourism groups in the management of zonation of the park, e.g. self-monitoring of diving practices, installing and maintaining dive boat moorings.

- promoting involvement of NGOs in park management.

Sources:

Hutomo, M. et al..1993. Marine Conservation Areas in Indonesia: Two Case Studies of Kepulauan Seribu, Java and Bunaken, Sulawesi. Paper presented at the UNEP/COBSEA/NOSTE Workshop EAS 25: Case studies in planning and management of marine protected areas/parks/reserves, Penang, Malaysia, February 1993.

BAPPENAS, MoF, USAID, ITTO. 1993. Joint Implementation Plan for the Natural Resources Management (NRM) and the Sustainable Forest Management (SFM) Projects 1991/1992 to 1994/1995. Jakarta.

NRM Project Coordinating Committee. 1993. Progress Report (Aug. 1990-Dec.1993). Jakarta.
Palete, Romon, Jerry Bisson, Graham Usher. 1992. The Role of Ecotourism in Supporting the Management of the Bunaken-Manado Tua National Marine Park. In: MoF (ed) 1992..Indonesia's Papers for the IVth World Congress on National Parks and Protected Areas. Caracas, Venezuela 10-21 Feb.1992: pp.135-143. Jakarta.

Case study # 13

Name: Natural Resources Management Project (NRMP)

Location: Bukit Baka - Bukit Raya National Park, Kalimantan Barat, Kalimantan Tengah

Duration: 1992-1997

Funding: USAID (US$ 18.5 million)/ BAPPENAS/MOF. Total cost: US$ 36.0 million.

Main features:

The project is aimed at developing improved policies and practices for managing natural resources in order to support continued economic growth. One of two components of the project is the field testing of policies and viable approaches for the multi purposes management of protected areas (both terrestrial and marine). The terrestrial testing site is Bukit Baka - Bukit Raya Strict Nature Reserves on the border of West and Central Kalimantan which became a national park (181.590 hectares) in 1992 while Bunaken/North Sulawesi was chosen as a marine testing site. The park is comparatively isolated, without proper boundaries, threatened by private interests (logging and gold mining) and unlikely to receive proper protection and management by government alone.

This project component focuses on the design and implementation of a management plan for the protected area in Kalimantan. It works with local communities, the village level administrative body (LKMD), the private sector (forest concession holders), provincial officials. and local NGOs.

The strategy pursued to achieve the objective is:

a) to establish working relationships with local communities and non-governmental organizations in the management of the National Park

b) to hold frequent informal meetings with local communities to obtain their assistance in gathering information on local culture, livelihood activities, land use and land tenure, etc.

c) formulating the draft 25 year development plan, draft first 5 year development plan and draft first operational plan for Bukit Baka - Bukit Raya National Park.

A number of approaches are being tried to design mechanisms for involving stake-holders in park planning, management, and development activities. For instance, the project is looking at fostering local village representatives to participate in bi-annual national park development (steering) meetings. Local communities participate in planning and developing a national park zoning system. They provide inputs and guidance on national park biological features and species patterns of distribution. Local people will help define and trace the national park zoning system.

To establish credibility the project works with farmers by demonstrating new activities (e.g. provision of drinking water). Self-help activities are being encouraged to enhance local community livelihoods without creating dependence on the project., e.g. vegetable gardens and tree crops. Several of these national park community development programs, initially sponsored by NRMP, are currently run entirely by local communities. NRMP-sponsored awareness activities are also run mainly through local villagers. NRMP also supports NGOs in the field of capacity building with the aim of getting them involved in actual implementation of project activities.

National park rangers are being encouraged to work together with local people on community development issues, through extension activities such as agroforestry and social forestry. A partnership relationship between local people and national park officials is being fostered.

The project also attempts to test the feasibility of village traditional forest areas (TFAs) in areas adjacent to the park to act as "collaboration buffer zones". Such TFAs include land where local communities will be allowed to harvest forest products in traditional ways that do not destroy the forest ecology. The harvesting of timber products for community consumption only will be allowed. The land proposed so far for this purpose is logged over concession holdings where the primary forest ecosystem has been disturbed considerably. Hence an agroforestry system needs to be reestablished which includes the development of a village management plan, village-level land use zoning, etc. It is also envisaged to establish such TFAs on land currently designated as protection forest.

In a sketch mapping exercise the villagers are encouraged to map their traditional land use practices in the national park region as a means to assess the possibility of designing a ladang rotation system with local people and to document tenure security and traditional forest extraction rights. The project attempts to examine the feasibility of formally acknowledging customary rights based on LKMD review and adat law in determining territories, scope of rights, responsibilities and legal status of village forest concessions.

Considerable attention will be given to the establishment of an environmental education and awareness program/strategy working with local NGOs and local communities.

Sources:

BAPPENAS, MoF, USAID, ITTO. 1993. Joint Implementation Plan for the Natural Resources Management(NRM) and the Sustainable Forest Management (SFM) Projects 1991/1992 to 1994/1995. Jakarta.

NRM Project Coordinating Committee. 1993. Progress Report (Aug. 1990-Dec.1993). Jakarta.

Associates in Rural Development. 1993. Integration of Provincial Regional Development Planning into the Bukit Baka - Bukit Raya National Park Management Plan.. NRMP Report No.20. Jakarta.

Case study # 14

Name: Dumoga - Bone National Park (since 1993 known as Bongani Nani Wartabone National Park)

Location: North Sulawesi

Duration: 1980 - ?

Funding: World Bank (total loan for national park and irrigation projects: US$ 60 million

Main features:

The establishment of the 3000 square kilometer park (in 1982-84) was closely linked with the development of two irrigation projects in the Dumoga valley. In 1960 the population of the fertile Dumoga valley was about 8000 who cultivated about 110 sq.km of rice fields. By 1980, migrants and transmigrants had increased the number to almost 50,000. This rapid expansion - linked with improved road access, land speculation, absentee landlords and traditional agricultural practices - contributed to increasing pressure on the region's forests. The existing Kosinggolan irrigation scheme was only partly functional in 1980, and interruptions in the water supply was attributed to deforestation of the catchment area. The World Bank was asked for a loan to complete this scheme and to develop the second scheme. The disbursement was made conditional upon the governments halting deforestation of the catchment areas, to ensure a constant water supply for irrigation. This was achieved through strict enforcement, and the national park was established in 1982. More than 400 farmers were evicted from the park in 1983, and each family was provided with about 2 hectares and a house. The first irrigation scheme was completed in 1984 benefitting 3,700 farmers whose income doubled or tripled during the following 6 years. The second scheme was finished in 1988 benefitting 4,800 farmers. The deforestation was halted after a period of three years.

The project demonstrated how a strong linkage can be established between effective park management and local economics in a situation where watershed protection is critical for adjacent agriculture. Dumoga is considered the first national park in Indonesia where PHPA has started with the implementation of the ICDP approach, where it attempted to work with farmer groups and helped create a buffer zone.

Several factors contributed to the initial success:

- the presence of a project which ensured rapid funding of infrastructure development.
- data collected on illegal settlers provided an important input to resettlement plans and law enforcement action.
- the provincial government played a highly supportive role in tackling the problems of land tenure, land speculation, encroachment into the national park and continues to cooperate effectively with the park management.

the loan funds included substantial budgets for park guard patrols and extension programs by local government representatives.

forest concessions at the park borders were canceled.

Effective enforcement against landless migrants and, more recently, gold prospectors has been the principal approach to protecting the park.

The project had, however, considerable shortcomings which hamper the development today:

forest boundaries of the Dumoga catchments were marked by the government without the active involvement of the local population.

pressure upon the forest could have been less had more attention been paid to the culture of the local population and its adaptability to change. The original Dumoga inhabitants were used to ladang or dry-land agriculture and could not adapt in time to irrigated rice cultivation. They were adversely affected by the park. Some were bought off their land while others sold their land to land speculators, transmigrants, absentee landlords and migrants. Local people were thus the main groups who invaded the protected forests. They should have been given a far greater share in the project scheme. Extension campaigns and self-help programs should have prevented them from false expectations, land speculation, forest clearance and cash crop planting in the reserve and have speeded up their adaptation to intensive forms of agriculture. Shifting cultivation and encroachment of protected areas is still a problem today (about 200 ha and 230 farmers). The lack of compliance with current regulations pertaining to the national park by these farmers is also due to the fact that illegal gold mining is not adequately prosecuted by government authorities.

no institutional provisions were made to ensure ongoing dialogue and coordination of the stakeholders after the end of the World Bank supported project. It is in this field where most of the current problems facing the development of the national park are found.

no adequate financial provisions were made for the time after the project. It is recognized that the project's fast development was largely possible because of the substantial funds allocated to infrastructure.

Sources:

Wells, Michael and Brendon, Katrina with Lee Hannah, People and Parks. Linking Protected Area Management with Local Communities. The International Bank For Reconstruction and Development. Washington 1992.

Wind, Jan and Sumardja, Effendy A.. Dumoga - Indonesia. Wolrd Bank Project for Irrigation and Watercatchment Protection. Paper presented to the International Institute for Environment and Development Conference on Sustainable Development, London 28 - 30 April, 1987.

Departemen Kehutanan, Dirjen PHPA, Rangkuman Hasil Rapat Koordinasi di Daerah. Penanganan Masalah Taman Nasional. TN. Gunung Leuser, Kerinci Seblat, Gunung Gede Pangrango, Kutai, Bongani Nani Wartabone. Jakarta 1993.

Case study # 15

Name: Gunung Leuser National Park

Location: Aceh and North Sumatra

Duration:

Funding: The European Economic Community

Main features:

Gunung Leuser became Indonesia's first national park in 1980. Five reserve areas were combined to create the 9,000 sq.km national park. It is considered as one of the most important tropical moist forest areas in the world. The park's ecosystem is critically threatened by illegal hunting, logging and agricultural expansion.

The park is now bisected by a road which was improved in the early 1980s. As a result of the improved access, the park's lowland forests within 1 to 5 kilometers of the road, which contain the greatest biological diversity, are being severely degraded by illegal logging and agricultural encroachment. No enforcement of park regulations is evident. National park personnel appear to have no effect on the rate of forest destruction. Under staffing and lack of equipment and park personnel is conspicuous.

The critical constraint appears to be the local resentment toward the park, at village and higher political levels. The lack of local support for the park is attributed to the fact that in Kabupaten Aceh Tenggara, where 82 % of the land has been set aside for conservation, virtually all of the land suitable for agriculture has already been colonized, and much of it in the park. The expanding population has little choice but to clear more forest. Any new initiatives to safeguard the park appears to be doomed without a fundamental shift in the relationship between the park, the Government of Aceh Tenggara and the local communities. In 1992 there were 2100 families living in the park who were targeted to be resettled outside the park.

The government is unlikely to support more rigorous enforcement measures in the politically sensitive Aceh region. However, there are at least two sites outside the national park boundaries that appear to have the potential for the development of irrigated agriculture. They may offer an opportunity for an integrated approach to development that can conserve the park.

Of major concern seems to be the increasing encroachment of the park. The access to the area was accelerated by the improvement of a road that cuts the park into two portions and which has become a barrier to movement for many wildlife species. The kabupaten government of Aceh Tenggara has sought to expand its agricultural area through conversion and clearing of state forest area including protection forest and national park forest. In 1987 it requested the governor of Aceh to convert 105, 000 ha of the park forest to agricultural land use.

In 1989, a Leuser National Park Development Coordination committee consisting of PHPA and the regional government authorities of Aceh decided to redesign the buffer zone which was - different from its current definition in Indonesia - inside the national park. Within the buffer zone,

"harvest rights" are granted to farmers who badly need land for cultivation, with the caveat to assist in safeguarding the national park from theft and cutting of timber, forest clearing, hunting, etc.. The "harvest right" holder is allowed to pick fruits, tap latex, pick leaves but not to cut trees.

While these measures benefitted only a few people, the search for long term solutions for the park boundary problems continue. A new effort to harmonize conservation objectives with local resource needs and development objectives has been made since 1992 with the facilitation provided under the ICDP scheme supported by BAPPENAS which now includes 5 national parks.The main focus of this new effort is to improve the relationship and communication among the actors. Coordination is locally with the BAPPEDAs of the two provinces.

Sources:

Wells, Michael and Brendon, Katrina with Lee Hannah, People and Parks. Linking Protected Area Management with Local Communities.. The International Bank For Reconstruction and Development. Washington 1992.

Departemen Kehutanan, Dirjen PHPA, Rangkuman Hasil Rapat Koordinasi di Daerah. Penanganan Masalah Taman Nasional. TN. Gunung Leuser, Kerinci Seblat, Gunung Gede Pangrango, Kutai, Bongani Nani Wartabone. Jakarta 1993.

Wind, Jan (ed.), Gunung Leuser National Park Border Problem Plan: Harmonizing Park Protection Objectives with Local Resource Use and Development Options in the Aceh Tenggara District. Project outline. Universitas Sumatra Utara. Medan 1988.

Bappeda Tkt.I Sumatra Utara. Penanganan Masalah Taman Nasional Gunung Leuser di Daerah Sumatra Utara. Bahan Paparan pada Rapat Koordinasi Taman Nasional di Cipanas 11 -12 Nop.1993.

Case study # 16

Name: Kutai National Park

Location: East Kalimantan

Duration:

Funding:

Main features:

The park was established as a reserve in 1936, and gazetted in 1984. In 1991 the park area was reduced by 1,371 ha. The management plan for the period 1985 - 1990 still awaits implementation which is hampered by budgetary and personnel constraints. Meanwhile a new master plan for 1990 -1995 has been devised. Since its establishment the park has suffered from human impacts and natural calamities (like forest fires in 1982-83, and drought in 1983). Parts of the park have been threatened by logging encroachment, shifting cultivation, estate speculation, squatting and industrial developments. Presently the establishment of a public road traversing the park, potential mining concessions, and new industrial developments around the park could amplify the threats. Roughly 2000 families are living inside the park.

In the early 1990s, it was realized that these mounting problems could not be dealt with adequately with the approach still pursued in the above plans as they started from the premise that a shortage of skills, funds and hardware were the main reasons for poor management performance. While there is certainly a need to improve the management structure and capacity of the park authority, the training of the park staff needed to be re-oriented towards a greater integration of conservation objectives with regional development planning needs. A development plan for the period 1992 - 1996 was prepared with financial support from the private sector (P.T.Kaltim Prima Coal). The involvement of the private sector is hitherto unique in Indonesia. In this plan, 17 projects were proposed ranging from conservation management, estate management, recreation management to training projects. A few of the projects have been funded already. The majority (totalling US $ 7.5 million), however, still awaits funding and implementation.

Part of the funds may be secured from the private sector (6 local companies operating adjacent and even partly inside the park) once an agreement is signed with PHPA which is expected to happen in the first half of 1994. Each of the 6 companies is prepared to contribute US $ 100,000 per year during the 5-year project period. For the remaining sum, international financial assistance is being sought. The establishment of a steering or supervisory committee is envisaged consisting of representatives of PHPA, local government agencies and the private sector, as well as an operating committee.

An additional effort to harmonize conservation objectives with local resource needs and development objectives has been made since 1992 with the facilitation provided under the ICDP scheme by BAPPENAS which includes 5 national parks. The main focus of this new effort is to improve the relationship and communication among the actors. Coordination is locally provided by the East Kalimantan BAPPEDA.

Sources:

Bachruddin, Memet A., Alan Irving, Kathy MacKinnon.1992. Local Industry Support for Kutai National Park. In: MoF (ed) 1992.. Indonesia's Papers for the IVth World Congress on National Parks and Protected Areas. Caracas, Venezuela 10-21 Feb.1992. pp.93-108. Jakarta.

MoF/ PHPA. 1991. Kutai National Park Developmental Plan 1992-1996, Operating Plan 1992, Framework for Management. Sept.1991. Jakarta.

Departemen Kehutanan, Dirjen PHPA. 1993. Rangkuman Hasil Rapat Koordinasi di Daerah. Penanganan Masalah Taman Nasional (TN. Gunung Leuser, Kerinci Seblat, Gunung Gede Pangrango, Kutai, Bongani Nani Wartabone). Puncak 11-14 Nop.1993. Jakarta.

Westcott, Julie. 1993. Buku Panduan Taman Nasional Kutai, Kalimantan Timur. P.T.Kaltim Prima Coal. n.p.

Case study # 17

Name: Mangrove Conservation Project (Package C)

Location: Pantai Timur Mangrove Forest Strict Nature Reserve, Jambi, Sembilang proposed Wildlife Reserve, South Sumatra Solo-Brantas coastline, East Java.

Duration: 12/1992 - 12/1994

Funding: The World Bank/ GOI 2nd Forestry Institutions and Conservation Project, Loan IBRD/WB(Package C)

Main features:

The objective of the project which is being implemented through PHPA is to enhance the capacity of PHPA to manage mangrove forests for nature conservation in coastal environments where human, social and economic needs and established land and resource use patterns need to be accommodated. The focus for the work is the preparation of management plans for each of the three locations. These areas have been chosen to represent contrasting ecological, socio-economic conditions and quite different administrative arrangements and opportunities. In all cases it is sought to link the conservation of nature to the socio-economic development of the people living within or adjacent to the sites. Integrated sustainable multiple use of landscapes is the goal.

The significance of the project is that it allows the analysis of the interaction of particular ecological, social, economic and administrative circumstances. It is intended that in accordance with Laws No.5/1990 and No.24/1992 (spatial use management) appropriate attention will be given to the involvement of the community and the development of local area management solutions.

The thrust of the management planning in the two locations in Sumatra is towards the development of policy and the establishment of infrastructure and staffing consistent with initiatives occurring throughout the MoF insofar as they are concerned with sustainable multiple use and local area management. The focus is on the management of the land and its resources in a sustainable way rather than in the perpetuation of single purpose, monosectoral approaches to land management involving the identification and isolation of special land types. In both locations in Sumatra the focus of management is on the people and on the economic pressures which arise internally and externally causing non-sustainable levels of resource exploitation. Coastal dynamics and the intrinsic ecological properties of the coastal ecosystems create a biophysical environment which is essentially resilient provided certain management guidelines are followed.

In East Java the management planning requirements are quite different. The area of investigation does not compromise any Forestry land nor is it administered in any way by that ministry. Here the objective of integrated sustainable multiple use depends upon mechanisms for understanding and cooperation among many government agencies at the central, provincial and local levels of government and with the private sector. The problems of management are essentially concerned

with regulating and managing rapid change to the coastal environment driven by rapid urban population growth and industrial expansion.The planning issues require a rapprochement of traditional top-down decision-making and the need to understand and accommodate bottom-up needs.

Source:

Davie, Jim et al.1993. Development of integrated management plans for nature conservation and sustainable, multiple use of mangrove areas: preliminary analysis of issues and proposed methodology for phase II. Bogor. Sept. 1993

Case study # 18

Name: Kepulauan Seribu Marine Park

Location: Java Sea, north of Jakarta

Main features:

The national marine park was created in 1982 to combat further degradation of the islands, particularly its corals and fish population, which had reached a crisis stage by the early 1980's as a result of destructive fishing practices and pressure from tourism. Most of the traditional inhabitants of Kepulauan Seribu (about 9500) are fishermen. Activities within the park which encompasses more than 70 of the over 100 islands of the archipelago, were to be regulated through a system of zoning. Despite these efforts degradation continued, caused by blast fishing, coral gathering for building material and uncontrolled tourism development which led to pollution. The islands have also been exposed to threats arising from industrial and domestic pollution emanating from the mainland (mainly discharges from Jakarta).

The park management regime failed to provide proper protection to the park resources from the outset, specifically the zoning system did not sufficiently take into account the varied economic conditions and use patterns of the target groups (developers, indigenous islanders and owners of private islands). Fishermen were excluded from fishing grounds, and resorts already in operation became part of the wilderness zone. Thus the park policy failed to include the needs and economic realities of local people. The users of the coastal resources (fishermen and tourism operators) need to be included in the design process of a coastal management system.

The problem of coordination with the provincial level was even more serious. In the absence of an implementing guideline for the park the governor of DKI Jakarta, under whose jurisdiction the islands happen to come, issued the Decision no.1814 of 1989 providing guidelines for the development of the sub-district (kecamatan) of Kepulauan Seribu. The Decision identified only 14 such islands, far fewer than the 70 for which the park had already established zoning. Moreover, the decision outlines general land use planning for each island in the archipelago, in several cases designating uses directly contradictory to park zoning. Thus the real management of the islands has occurred at the provincial level rather than through PHPA. The latter has been hopelessly underfunded and understaffed and its staff was inadequately prepared to deal with provincial representatives on issues of regional development. Thus the implementing agency for a coastal management plan must be carefully chosen. There are, however, signs of hope. In August 1992 a resolution of the zoning conflict had been reached.

Sources:

Yates, Brian F. 1993. The Implementation of Coastal Zone Management Policy: Kepulauan Seribu Marine Park, Indonesia. (Draft).

Hutomo, M. et al..1993. Marine Conservation Areas in Indonesia: Two Case Studies of Kepulauan Seribu, Java and Bunaken, Sulawesi. Paper presented at the UNEP/COBSEA/NOSTE Workshop EAS 25: Case studies in planning and management of marine protected areas/parks/reserves, Penang, Malaysia, February 1993

Halim, M.H.; Rili H. Djohani. 1992. Pulau Seribu Ten Years Later: A Marine Protected Area in Indonesia. In: MoF (ed) 1992. Indonesia's Papers for the IVth World Congress on National Parks and Protected Areas. Caracas, Venezuela 10-21 Feb.1992. pp.440-449.

Case Study # 19

Name: Mapping Community-Managed Territories in Indonesia's Forests

Location: Long Uli Village, East Kalimantan

Duration:

Funding: GOI (PHPA/MoF), WWF/East West Center/Walhi

Main features:

The Long Uli mapping exercise constitutes a pioneering effort in the attempt to demarcate historic community territorial boundaries, in using sophisticated mapping techniques, like the Global Positioning System (GPS) and GIS methodologies, and ethnographic methods, like oral histories, sketch maps, etc. It showed that traditional village management areas can be mapped with precision and that the overlapping areas between village managed territories and MoF designated forest zones including production and protection areas, can be specified. The Long Uli exercise did not only pinpoint areas of overlapping claims among property rights claimants, it also made an attempt to articulate practical, harmonious solutions to competing interests and claims to forest territory and resources. The exercise demonstrated rational means of dispute resolution, using these maps, thereby increasing sustainable resource management. The authors of this exercise suggest that mapping will facilitate better communication between villagers and foresters.

Sources:

Zerner, Charles. 1992. Indigenous Forest-Dwelling Communities in Indonesia's Outer Islands: Livelihood, Rights and Environmental Management Institutions in the Era of Industrial Forest Exploitation. Unpubl.ms, n.p..

Sirait, Martua Thomas. 1992. Mapping Customary Land: A Case Study in Long Uli Village, East Kalimantan, Indonesia. In: Fox, J., Flavelle, A., Podger, N. (eds.) Voices from the field: Fifth annual scocial forestry writing workshop.

Sirait, Martua et al. Mapping Customary Land in East Kalimantan, Indonesia: A Tool for Forest Management. Unpubl.ma. n.d., n.p.

Case Study # 20

Name: Integrated Management Plan for the Coastal Resources of Segara Anakan Lagoon and Vicinity

Location: Cilacap, West Java

Duration: 1986-1990

Funding: Under the ASEAN-US Coastal Resources Management Project

Main features:

The primary intention of this pilot project (study) has been to formulate coastal resource management plans to achieve sustainable management of the vulnerable resources in the area and to address the low socioeconomic status of the communities.

The area chosen is representative of a heavily used area rich in a variety of resources. It has the largest remaining mangrove habitat in Java and supports an offshore and lagoon fishery for shrimp and fish of economic significance. It is an important breeding and resting area for vulnerable wildlife and houses several traditional villages dependent on the lagoon and forest for livelihood. The lagoon is shrinking in size as sediment accumulation from upland erosion and from engineering projects to enhance lowland irrigation. Without active management intervention in the near future the resources will be lost. On the other hand the socioeconomic status of the already poor inhabitants is declining.

It was found that a lack of coordination among the many government (national and local) agencies typically involved in the management of coastal areas, is one of the main causes for the poor management of the Anakan Segara lagoon.

The study provides a detailed analysis of the resource management, environmental and socioeconomic issues which confront Anakan Segara and those agencies managing the area. The land use conflicts contribute to the poor economic well being of the communities. In turn, local residents are not cooperative in abiding by law and resource management guidelines which could be to their benefit.

The study suggests policies to be adopted to effectively address the causes of the management issues and provide the thrust to support the plan strategies and actions suggested. The authors of the study came to the conclusion that institutionally the coordination would best be ensured by the Bappeda II and the Bupati consisting of representatives from local and central government agencies and the local communities as it will only be through their participation, as investigation showed, that most of the plan recommendations have a chance of being implemented.

Source:

ASEAN/USAID/International Center for Living Aquatic Resources Management. 1990. Integrated Management Plan for the Coastal Resources and Land Uses of Segara Anakan Lagoon and Vicinity, Cilacap, Indonesia. ASEAN/US Coastal Resources Management Project, Indonesia. Jakarta.

Case Study # 21

Name: Cyclops Mountains Conservation Area

Location: Irian Jaya

Duration: 1986 -

Funding: WWF/Ford Foundation

Main features:

In 1984, WWF prepared a management plan for the Cyclops Mountains Conservation Area (established in 1978) which proposed a system of buffer zones, or low-intensity use zones . These were to be managed by and for the benefit of the local communities, which view forest access as a traditional right. The Cyclops Mountains plan represents one of the first attempts in Indonesia to establish community-managed zones within and around the periphery of a nature reserve.
Since the boundaries between state forest land and tribal land have never been clarified, this pilot project provided the opportunity to stabilize reserve boundaries and to develop a new process through which local government and forest-dependent communities could agree on land-use management methods and responsibilities.

Since the reserve was established, it had been threatened by shifting cultivation, illegal logging, hunting and particularly by land sales to immigrants along the reserve's southern boundary which weakened tribal control of some areas. Indigenous communal land has also been leased through unwritten agreements to immigrant tenants. Such land transfers, coupled with the loss of indigenous control, pose the greatest threat to the reserve.

The objective of the project is primarily to stabilize the reserve boundaries and minimize land clearance by identifying and strengthening tribal ownership and responsibility for land management. To improve forest management, traditional land tenure and management should be legitimized, particularly on lands bordering the reserve.

The project staff was recruited from the pilot site villages and after some training to increase their problem-solving abilities as community organizers were placed in communities where they knew the tribal conditions and the language. Senior staff from the provincial forestry service, the Irian Jaya Rural Development Foundation and WWF were responsible for field cooperation and supervision. Training involved field exercises in the use of rapid rural appraisal techniques, group interviews, and procedures for helping communities formulate forest management plans and formalize them with government agencies.

Despite clear progress the project has been hindered by problems resulting largely from unclear agency responsibilities which affected coordination by forest department staff and consequently the initiatives of field staff. Heavy bureaucratic involvement made project management cumbersome. There was no follow-up and coordinated supervision to the training which led to increased disenchantment of the field staff. The project attempts to control illegal hunting, encroachment, land sales and logging. Had the local people originally been actively involved in the demarcation of the reserve boundaries, many of the problems could have been avoided.

No village councils for land management - like in Arfak where the tribes have organized themselves into village communities - were created in the Cyclops Mountains. The lack of follow-through has stifled individual initiatives. The involvement of Jakarta and provincial officials has slowed project implementation. The authorities failed to recognize the traditional institutions for land management including tribal land rights and the dewan adat with its traditional laws. Specifically they did not avail themselves of the land management role this dewan adat can play.

The ultimate success of the community-managed areas of the Cyclops Mountains will depend on the management capacity of the tribal organizations, the extent to which land-use agreements reflect community needs, and the establishment of good communication between the community and the forestry department based on mutual incentives.

An early error was the misidentification of community members with whom dialogue and cooperation would be most effective.

Sources:

Mitchell, Arthur et al. 1990. Community Participation for Conservation Area Management in the Cyclops Mountains, Irian Jaya, Indonesia. In: Poffenberger, Mark (ed): Keepers of the Forest. Land Management Alternatives in Southeast Asia. Manila 1990, pp.237-252.

Sardjito, Social Forestry di Sekitar Cagar Alam Cyclops dan Lembah Baliem Sebagai Salah Satu Bentuk Pengelolaan Kawasan Penyangga. In: WWF (1990), Prosiding Seminar Nasional Pengelolaan Kawasan Penyangga, Jayapura tgl.16-17 Oktober 1990, pp.171-176.

Appendix 10: Bibliography

Arihadi, Y.1993. Social Forestry in Java. A Compromise that is Working. In: Forests, Trees and People Newsletter No.20, April 1993: pp10-14.

Asian Development Bank (ADB), MoF/PHPA. 1992. Management and Conservation of Tropical Forest Ecosystems and Biodiversity. Project T.A. 1430-INO. Deutsche Forest Consult, P.T. Hasfarm Dian Konsultan.

Association of Southeast Asian Nations (ASEAN), United States Agency for International Development, International Center for Living Aquatic Resource Management. 1990. Integrated Management Plan for the Coastal Resources and Land Uses of Segara Anakan Lagoon and Vicinity, Cilacap, Indonesia. ASEAN-US Cooperative Program on Marine Sciences: Coastal Resources Management Project. Jakarta.

Bachruddin, Memet A., Alan Irving, Kathy MacKinnon.1992. Local Industry Support for Kutai National Park. In: MoF (ed) 1992. Indonesia's Papers for the IVth World Congress on National Parks and Protected Areas. Caracas, Venezuela 10-21 Feb.1992. pp.93-108. Jakarta.

Bappeda Tkt.I Sumatra Utara. Penanganan Masalah Taman Nasional Gunung Leuser di Daerah Sumatra Utara. Bahan Paparan pada Rapat Koordinasi Taman Nasional di Cipanas 11 -12 Nop.1993.

BAPPENAS. 1991. Pedoman Penanganan Masalah Taman Nasional Kerinci Seblat. Disiapkan oleh kelompok kerja: S.K. MENDAGRI Nomor 423.205/ 752/ PUOD ganggal 19 Agustus 1991.

BAPPENAS. 1993. Biodiversity Action Plan for Indonesia. Jakarta.

Caldecott, Julian O.. 1992. Designing Protected Area Projects to Reduce Conflicts with Local People. In: IVth World Congress on National Parks and Protected Areas. Caracas, Venezuela 10-21 Feb.1992. pp.93-108.

Chua, T-E; Fallon Scura, L.(eds.).1992. Integrated Framework and Methods for Coastal Area Management. Iclarm Conf.Proc.37.

Craven, Ian; Fretes, Yance de. 1987. Arfak Mountains Nature Conservation Area, Irian Jaya. Management Plan 1988 - 1992.

Craven, Ian, Wahjudi Wardojo, B.Klanit. 1992. Conflicts Between Integrating Traditional Peoples into Protected Area Management Systems and Park Zoning. Case Examples from Irian Jaya, Indonesia. In: MoF (ed) 1992.. Indonesia's Papers for the IVth World Congress on National Parks and Protected Areas. Caracas, Venezuela 10-21 Feb.1992. pp. 201-213. Jakarta.

Davie, Jim et al.1993. Development of Integrated Management Plans for Nature Conservation and Sustainable, Multiple use of Mangrove areas: preliminary analysis of issues and proposed methodology for phase II. Bogor.

Departemen Kehutanan, Dirjen PHPA. 1993. Rangkuman Hasil Rapat Koordinasi di Daerah. Penanganan Masalah Taman Nasional (TN. Gunung Leuser, Kerinci Seblat, Gunung Gede Pangrango, Kutai, Bongani Nani Wartabone). Puncak 11-14 Nop.1993. Jakarta.

Departemen Kehutanan. 1993. Pedoman Penyusunan Rencana Pengelolaan Taman Nasional. Jakarta.

Devas, Nick. 1989. Financing Local Government in Indonesia. Ohio University. Monograph in International Studies. Southeast Asia Series No.84. Ohio.

DHV Consultants. 1985. Buffer Zone and Research Management for Indonesian National Parks. Inception Report. The World Bank National Park Project. Bogor.

DHV Consultants. 1992. Bufferzone and Research Management. Final Report. National Park and Development Project Buffer Zone and Research Management. World Bank, Govt. of Japan, Govt. of the Netherlands. Bogor.

DHV Consultants/ WWF. 1993a. Integrated Conservation and Development Project (ICDP) Kerinci Seblat National Park. Project Brief. Bogor.

DHV Consultants/ WWF. 1993b. Integrated Conservation and Development Project (ICDP) Kerinci Seblat National Park. Case Study. Jakarta.

Gouyon, A.; H. de Foresta; P.Levang. 1993. Does "Jungle Rubber" Deserve its Name? An Analysis of Rubber Agroforestry Systems in Southeast Sumatra. In: Agroforestry Systems 22. 1993: 181-206.

Halim, M.H.; Rili H. Djohani. 1992. Pulau Seribu Ten Years Later: A Marine Protected Area in Indonesia. In: MoF (ed) 1992. Indonesia's Papers for the IVth World Congress on National Parks and Protected Areas. Caracas, Venezuela 10-21 Feb.1992. pp.440-449.

Heppel, Mike. 1993. 25 Year Management Plan Bukit Baka-Bukit Raya. NRMP. Jakarta. Draft.

Hutomo, M. et al..1993. Marine Conservation Areas in Indonesia: Two Case Studies of Kepulauan Seribu, Java and Bunaken, Sulawesi. Paper presented at the UNEP/COBSEA/NOSTE Workshop EAS 25: Case studies in planning and management of marine protected areas/parks/reserves, Penang, Malaysia, February 1993.

Kartasubrata, Junus et al.:1993. Research Support to Perhutani Social Program on Forest Land in Java 1984 - 1992. Center for Development Studies. Bogor Agricultural University. Bogor.

Kuester, Ernst. Pengalaman lapangan dalam rangka penciptaan strategi perhutanan sosial di pedesaan Kalimantan Barat. Dalam: Prosiding seminar "Peranserta Masyarakat Lokal dalam Pengelolaan Hutan di Indonesia" Jakarta 9.2.1993 diselenggarakan oleh Program Pascasarjana Universitas Indonesia dan Direktorat Jenderal Pengusahaan Hutan, Departemen Kehutanan, pp.55-65.

Kuester, Ernst. 1993. Concept of the Social Forestry Development Project in West Kalimantan. In: GFA (Gesellschaft für Agrarprojekte m.b.H.) (Ed.) Innovation and Development. Policies, Concepts and Cases for Agriculture and Forestry in International Cooperation. Kiel. pp.15-25.

Lewis, Connie. 1992. Parks and People in Conflict . A Framework for Analysis and Action. Paper presented at the IVth World Congress on National Parks and Protected Areas, Caracas, 10-21 Feb.1992., Symposium I, Workshop 1.9.

Lewis, Connie 1993. Resolving and Managing Conflicts in Protected Areas. Guidelines for Protected Area Managers. International Union for the Conservation of Nature (IUCN). Draft.

MacKinnon, J.M. et al. 1981-82. National Conservation Plan for Indonesia. Vols.1-7. FAO FO/INS/78/061 Field Reports. Bogor.

Michon, Genevieve and Hubert de Foresta. 1990. Complex Agroforestry Systems and Conservation of Biological Diversity (I). Agroforests in Indonesia: The Link Between Two Worlds. Communication presented in Kuala Lumpur, 12-16 June 1990,to the Int.Conf.on the Conservation of Tropical Biodiversity, "In Harmony with Nature".

Michon, Genevieve. 1991. The Damar Gardens: Existing Buffer Zones at Pesisir Area of Sumatra Selatan National Park, Lampung. In: Wind, Jan (Ed.. 1991. Rain Forest Protection and National Park Buffer Zone Development. Proceedings of the Symposium, Jakarta, 7 Feb.1991. National Parks Development Project. Main Papers. pp. 38-48.

Ministry of Forestry (MoF). I1991. Indonesian Forestry Action Program. 3 vols.. Jakarta.

Ministry of Forestry (MoF)/ FAO. 1990. Situation and Outlook of the Forestry Sector in Indonesia. Vol.4: Social, Environmental and Institutional Aspects. Directorate General of Forest Utilization. Jakarta.

Mitchell, Arthur et al. 1990. Community Participation for Conservation Area Management in the Cyclops Mountains, Irian Jaya, Indonesia. In: Poffenberger, Mark (ed): Keepers of the Forest. Land Management Alternatives in Southeast Asia. Manila 1990, pp.237-252.

MoF, PHPA. Kutai National Park Developmental Plan 1992 . 1996, Operating Plan 1992 Framework for Management. Jakarta, Sept. 1991

Palete, Romon, Jerry Bisson, Graham Usher. 1992. The Role of Ecotourism in Supporting the Management of the Bunaken-Manado Tua National Marine Park. In: MoF (ed) 1992..Indonesia's Papers for the IVth World Congress on National Parks and Protected Areas. Caracas, Venezuela 10-21 Feb.1992: pp.135-143. Jakarta.

Peluso, Nancy Lee: Excerpts from the Evaluation of the Java Social Forestry Program.(Unpublished) Jakarta Dec.30, 1991.

Peluso, Nancy Lee et al.: Reorienting Forest Management on Java. In: Poffenberger, Mark (ed): Keepers of the Forest. Land Management Alternatives in Southeast Asia. Manila 1990, pp.220 - 236.

Petocz, R. G. et al.. 1990. Kutai National Park. Planning for Action. World Wide Fund for Nature (WWF). Jakarta.

Petocz, R.G.; Raspado, G.P.1983. Recommended Reserves for Irian Jaya Province: Statements prepared for formal Gazettement of 31 Conservation Areas. WWF/IUCN Project 1528. Special Report in two parts. WWF. Bogor.

Petocz, R.G.; Raspado, G.P. 1987. Konservasi Alam dan Pembangunan di Irian Jaya. WWF/IUCN. Jakarta.

Petocz. R.G. 1989. Conservation and Development in Irian Jaya. Leiden, New York, Kobenhavn, Köln.

Rumusan Hasil Lokakarya Peningkatan Peran Serta Masyarakat dalam Kegiatan Konservasi Taman Nasional Rinjani, Nusa Tenggara Barat. 12 - 13 Augustus, 1993.

Rutherford, Danilyn Fox. 1990. The Prospects for Legal Approaches to Securing Forest Tenure Rights in Indonesia's Outer Islands. A strategy paper submitted to The Ford Foundation as part of a professional internship. Unpubl.ms..

Salm, R.V.; Halim, M..1984. Marine Conservation Data Atlas for Indonesia. IUCN/WWF Project 3108. Bogor.

Siebert, Stephen F.; Jill M. Belsky; Kurnia Rauf. 1992. Rattan Management for Sustainable Livelihoods and Forest Conservation: The Case of Kerinci Seblat National Park, Indonesia. In: MoF (ed) 1992. Indonesia's Papers for the IVth World Congress on National Parks and Protected Areas. Caracas, Venezuela 10-21 Feb.1992.

Sirait, Martua Thomas. 1992. Mapping Customary Land: A Case Study in Long Uli Village, East Kalimantan, Indonesia. In: Fox, J., Flavelle, A., Podger, N. (eds.) Voices from the field: Fifth annual social forestry writing workshop.

Sloan, N.A.,; Sugandhy, A. 1993. An Overview of Indonesian Marine and Coastal Environmental Management. Unpubl.ms.

Sumardjo, Tony, Sumarsono, Titus Sariyanto. 1992. Management of Protection and Production Forests and Industrial Forest Plantation as Buffers for Protected Areas in Indonesia. In: MoF (ed) 1992.. Indonesia's Papers for the IVth World Congress on National Parks and Protected Areas. Caracas, Venezuela 10-21 Feb.1992. pp.388-405. Jakarta.

Tjitradjaja, Iwan. Differential Access to Resources and Conflict Resolution in a Forest Concession in Irian Jaya. In: Ekonesia Vol.1, No.1,1993: pp 58-69.

Usher, Graham. 1993. Expected Impacts of Pilot Project Activities on Marine Conservation Policy and Practices (Draft). Manado.

Wells, Michael and Brendon, Katrina with Lee Hannah.1992. People and Parks. Linking Protected Area Management with Local Communities. The International Bank For Reconstruction and Development. Washington.

Wind, Jan (ed.), Gunung Leuser National Park Border Problem Plan: Harmonizing Park Protection Objectives with Local Resource Use and Development Options in the Aceh Tenggara District. Project outline. Universitas Sumatra Utara. Medan 1988.

Wind, Jan.(ed) 1991. Symposium on Rain Forest Protection and National Park Buffer Zones. Jakarta Feb.7, 1991. Main Papers. National Parks Development Project Buffer Zone and Research Management. Bogor.

Wind, Jan. 1991. Buffer Zones. Vol.1: A Concept for Park Protection and Community Participation. DHV Consultants BV/ Rijn. Bogor.

Wind, Jan and Sumardja, Effendy A.. Dumoga - Indonesia. Wolrd Bank Project for Irrigation and Watercatchment Protection. Paper presented to the International Institute for Environment and Development Conference on Sustainable Development, London 28 - 30 April, 1987.

Witoelar, Wimar, 1991. Java Social Forestry Program Institutional Evaluation. Final Report. Jakarta.

World Bank. 1992. Conserving Biological Diversity: A Strategy for Protected Areas in the Asia Region. Washington. D.C. Draft.

World Wide Fund for Nature. Keluru Cultural Forest: Kerinci Traditional Wisdom and Conservation. In: Conservation Indonesia (WWF)vol. 9, No. 1 1993: 21.

Yates, Brian F., 1993. The Implementation of Coastal Zone Management Policy: Kepulauan Seribu Marine Park, Indonesia. (Draft).

Yuniati, Sih, 1993. Pembinaan Peran Serta Masyarakat dalam Pengelolaan Pemanfaatan Hutan Melalui Progam Perhutanan Sosial. (Suatu Rangkaian Pengalaman Bina Swadaya). Jakarta.

Zerner, Charles, 1990. Community Rights, Customary Law, and the Law of Timber Concessions in Indonesia's Forests: Legal Options and Alternatives in Designing the Commons. Forestry Studies UTF/INS 065. n.p. (unpubl.ms

NRM/ARD CONSULTANCY REPORTS

NO.	TITLE	AUTHOR
1.	Procurement Plan For Research Equipment at Bukit Baka and Equipment Installation at Samarinda Forestry Research Station	Roy Voss
2.	Agroforestry in Bukit Baka/ Bukit Raya	W.G. Granert
3.	Pengukuran dan Pemetaan Topografi Sebagian Daerah Taman Nasional Bukit Baka/Bukit Raya	Sahri Denny, cs
4.	Applied Research Recommendations for Production Forest Management An Economic and Ecological Review of the Indonesian Selective Cutting and Replanting System (TPTI)	Lisa Curran & Monica Kusneti
5.	Balancing Forest and Marine Conservation with Local Livelihoods in Kalimantan and North Sulawesi	Jill M. Belsky
6.	Proposal to the GOI and USAID for the Development of Comprehensive Environmental and Natural Resources Accounts (CENRA) for Economic Planning and Management	Henry Peskin & Joy Hecht
7.	Bukit Baka Mini–Hydraulic System Implementation Plan	Michael Johnson
8.	Final Report: Bukit Baka – Bukit Raya 1992	Roy Voss
	Station Protocol: Bukit Baka – Bukit Raya 1992	Roy Voss
	Research Protocol: Bukit Baka – Bukit Raya 1992	Roy Voss

NO.	TITLE	AUTHOR
9.	Environmental Education and Awareness in Bukit Baka (vol.1)	Nancy Bergau
	Environmental Education and Awareness in Bukit Baka Guide to Environment and Fire Campaign (vol.2)	Nancy Bergau
10.	Recommendations for Controlled Timber Harvesting in the SBK Forest Concession	John Hendrison
11.	Cruiser Identifications at SBK and Local Uses of Trees by Local People	Jim Jarvie
12.	Community Water Supply Feasibility Study for Bukit Baka–Bukit Raya, Kalimantan	Rick McGowan & Alfonso Rieuwpassa
13.	Report on NRM Library Consultancy September – December 1992	Dachlan Cartwright
14.	Livelihoods Strategies and Marine Resource Among Residents of Bunaken National Park, North Sulawesi: Recommendations for Local Involvement in Park Management	Jill M. Belsky
15.	A Competitive Awards Scheme for Applied Forest Management and Nature Conservation	Peter R. Burbridge
16.	Design of a Management Information System for the Natural Resources Management Project	Joy Hecht
17.	Environmental Education and Awareness Strategy for Bukit Baka – Bukit Raya National Park (volume 1)	Nancy Bergau
	NGO Training for a Local Environmental Education and Awareness Strategy (volume 2)	Nancy Bergau
18.	Water Supply and Sanitation (WS&S) Program in Bukit Baka – Bukit Raya, Kalimantan Program Status Report	Rick McGowan

NO.	TITLE	AUTHOR
19.	The Role of NGOs in Supporting the NRM Project in Bukit Baka – Bukit Raya National Park	Marcel de Brune
20.	Integration of Provincial Regional Development Planning into the Bukit Baka – Bukit Raya National National Park Management Plan	E. Edwards McKinnon
21.	Communications, Information, and Education Strategy for Bunaken National Park	Nancy Bergau
22.	Report on the Preparation of a Design for a Study of the Natural Resource Impacts of Marine Sector Policy During the Second Long–Term Development Plan Period	Andrea S. Katz
23.	Management Information System for the Natural Resources Management Project Report on the Second Mission to Jakarta July – August 1993 (Volume 1)	Joy Hecht
	Management Information System for the Natural resources Management Project User Manual and Technical Documentation (Volume 2)	Joy Hecht
24	Water Supply and Sanitation Program in Bukit Baka – Bukit Raya, Kalimantan Status Report No. 2	Jonathan Hodgkin
25.	Report on Communities Living Within Reach of The Bukit Raya National Park in Kalimantan Tengah	Michael Heppell
26.	Effective Protection and Natural Resource Management in Indonesia	Janis Togashi
27.	Biological Conservation in the Sustainable Management of Production Forest	Jim Jarvie
28.	Economic Issues Associated with the TPTI Management System	Steven E. Dennison
29.	A Review of Planning Arrangements for Sustainable Management of Natural Production Forest on Forest Concessions in Indonesia An Interim Report	Ian Armitage
30.	Eco–Tourism Development in Bunaken National Park and North Sulawesi	Richard Sandler

NO.	TITLE	AUTHOR
31.	Environment and Development in Indonesia An Input – Output Analysis of Natural Resource Issues	Clive Hamilton, et al
32.	Survei Pemanfaatan Tumbuhan Obat di Nanga Juoi, Kecamatan Menukung, Kalimantan Barat	Izefri
33.	Mid Term Report: Guidelines and Implementation Issues Concerning Naturai Production Forest Management	Art W. Klassen
34.	Village Sketch Mapping at Bukit Baka – Bukit Raya National Park, West Kalimantan	Alix Flavelle
35.	Pengkajian Lembaga Swadaya Masyarakat (LSM) Terpilih di Kalimantan Barat dalam Memperkokoh Proyek Pengelolaan Sumber Daya Alam (NRMP)	Sih Yuniati & Haryono
36.	Strategi Produksi Media Penyadaran Masyarakat untuk Taman Nasional Bunaken dan Perencanaan Produksi Prioritas Pertama dan Kedua	Harijanto Suwarno
37.	Avoidable Logging Waste Draft Report	A.W. Klassen