PN-ABR 948
89283

NATURAL RESOURCES MANAGEMENT PROJECT

BAPPENAS – Ministry of Forestry
Assisted by
USAID

MID TERM REPORT: GUIDELINES AND IMPLEMENTATION ISSUES CONCERNING NATURAL PRODUCTION FOREST MANAGEMENT

Associates in Rural Development
for
Office of Agro–Enterprise and Environment
USAID – Jakarta

AID Contract No. 497 – 0362

December 1993

REPORT NO. 33

TABLE OF CONTENTS

Preface i
Executive Summary ii

1.0 Introduction 1
1.1 The NRM Project 1
1.2 Natural Production Forest Management 1
1.3 Terms of Reference 1
1.4 PT Sari Bumi Kusuma (P.T. SBK) 2
1.5 The Study Area 2
1.6 Organization of Report 3

2.0 Review of Existing Guidelines 4
2.1 Concession Renewal and Issuance of New Concessions 4
2.2 Long Term Management Plans (RKPH) 4
2.2.1 Forest Land Use By Consensus 5
2.2.2 Determination of Annual Allowable Cut 6
2.3 5-Year Working Plans (RKL) 6
2.4 Annual Working Plans (RKT) 7
2.4.1 Reporting 8
2.4.2 Cut Control 8
2.5 Indonesian Selective Cutting and Planting System (TPTI) 9
2.5.1 Working Area Organization 10
2.5.2 Inventory Before Felling 11
2.5.3 Infrastructure Establishment 12
2.5.4 Logging 13
2.5.5 Liberation 13
2.5.6 Inventory of the Residual Stand 14
2.5.7 Seedling Procurement 16
2.5.8 Planting 16
2.5.9 Stand Tending - Liberation, Weeding, Thinning 16
2.5.10 Protection and Research 17

3.0 Description of P.T. SBK Activities 18
3.1 Long Term Management Plan 18
3.1.1 Annual Allowable Cut 18
3.1.2 Maps and Photographs 19
3.2 5 - Year Operational Plan 19
3.3 100% Cruising 19
3.3.1 Logistical Commitment 19
3.3.2 Implementation 20
3.3.3 Contouring 20
3.3.4 Mapping 21
3.4 Road System Planning, Location, Survey and Mapping 21
3.5 Road Construction 22
3.5.1 Road Construction Standards 23
3.5.2 Use of Logs in Road Bed Stabilization 23
3.5.3 Salvage of Right-of-Way Logs 24
3.5.4 Drainage Structures 24
3.5.5 Some Road data 24

3.6 Logging 25
3.6.1 Production Report 25
3.6.2 Production Planning 26
3.6.3 Organization of the Work 26
3.6.4 Felling and Bucking 27
3.6.5 Log Measurements, Numbering and Production Reporting 27
3.6.6 Royalty Assessment and Monitoring 28
3.6.7 Transportation 28
3.7 Post Logging Activities 29
3.7.1 Inventory of the Residual Stand 29
3.7.2 Forest Nursery 33
3.7.3 Liberation and Planting 36
3.7.4 Stand Tending 37
3.7.5 Research 38

4.0 Study Proposals 43
No.1 Quantification of Avoidable Logging Waste 44
No.2 Quantification of Commercial Wood Loss Due to Current Road Construction Practices 50
No.3 Comparison of Sampling Intensities 53
No.4 Development and Field Testing of a Diagnostic Silvicultural Survey Procedure 55
No.5 Low Impact Logging: Planning and Implementation 59
No.6 Construction of Simple Box Culverts 63
No.7 A Comparative Study Between 100% Cruising Data and 100% Post Harvest Assessment Data 65

Appendices

Appendix 1: Consultant's TOR

Appendix 2: Selected References

Appendix 3: Mill Tour P.T. SBK

PREFACE

This report is one of a number of reports produced under the Government of Indonesia's Natural Resources Management Project (NRM) that is assisted by the United States Agency for International Development (USAID).

The NRM Project, working with the Indonesian National Planning Board (BAPPENAS) and the Department of Forestry (Departemen Kehutanan), provides through a specially established project Policy Secretariat advice to BAPPENAS on natural resource issues relating to long term and short-term national planning. In addition, working with the Department of Forestry the NRM project carries out field activities in two pilot project areas one in West/Central Kalimantan and one in North Sulawesi including the preparation of management plans for the Bukit Baka - Bukit Raya National Park in Kalimantan and the Bunaken National Park in North Sulawesi. Each report addresses an aspect of the planned NRM project activities that are agreed on and laid out in an annual NRM Implementation Plan and each report aims at providing specific recommendations for future work in the area addressed.

EXECUTIVE SUMMARY

This is an interim report and is submitted half way through a five month consultancy in compliance with contract obligations.

The two primary purposes of this report are:

1. To provide a brief review of the various guidelines covering natural production forest management and, to document the observations of management activities made during field visits to the concession of PT. Sari Bumi Kusuma (PT.SBK).

2. To suggest a number of practical study proposals concerning specific issues in the natural production forest management system. The intention is that one or more of these study proposals will be implemented jointly by the NRM Project and PT.SBK during the second half of the consultancy with the objective of providing a direct benefit to both the concessionaire and the Ministry of Forestry.

The report does not attempt a detailed analysis of the guide[illegible] nor does it provide conclusions or recommendations. These as[illegible] of the study will be submitted as a crucial part of the fi[illegible] report at the end of the consultancy.

Observations, impressions, and study proposals were drawn from two intensive field tours to the concession of PT.SBK as well as numerous meetings and discussions with company staff and management in the concession and at the company offices in Pontianak and Jakarta.

Kanwil and Dinas officials in Pontianak and Palangkaraya were kept informed of ongoing activities and provided many useful suggestions at presentations given in both provincial capitals.

In addition, two other forest companies were visited in Central Khalimantan at the request of Kanwil. The Consultant benefited from these visits in terms of building a broader base of understanding of the management guidelines and operational realities. The Consultant has also visited five other Indonesian concessions in another recent consultancy.

Observations of the management practices at PT.SBK suggest that:

1. PT.SBK has achieved a remarkably high degree of compliance with Ministry of Forestry Guidelines.

2. Where clear advantages in terms of improved planning capability or operational efficiency exists, the company has often exceeded guideline requirements.

3. Where guidelines do not provide a clear rationale or statement of objectives or, appear to lack technical validity, company performance was often found to be less than adequate or appeared to serve very little useful purpose in it's organizational structure of activities.

1.0 INTRODUCTION

1.1 The NRM Project

The Natural Resources Management Project (NRMP) is a policy and research driven programme within the Indonesian National Planning Board (BAPPENAS) and the Ministry of Forestry (MoFr). The programme is funded by the United States Agency for International Development (USAID) and the International Tropical Timber Organization (ITTO), and implemented by Associates in Rural Development (ARD), a private consulting firm.

The natural production forest management, community development, research, and park planning elements of the project which are situated in West and Central Khalimantan, rely heavily on the participation of the private sector cooperant, PT. Sari Bumi Kusuma (PT.SBK) of the Alas Kusuma Group.

1.2 Natural Production Forest Management

Under the NRMP, the MoFr has chosen to examine policies and practices with the aim of improving the management of natural production forests. Recent developments in the project have identified the need to strengthen the existing team of experts with the addition of two, coordinated consultancies in the area of natural production forest management. The first consultancy deals with evaluation of existing plans. The subject of the following report is the midterm observations of the complimentary consultancy dealing with implementation of existing planning and regulatory requirements in the production forest.

1.3 Terms of Reference (TOR)

The position of "Forest Management Implementation Specialist" is the second part of a dual consultancy in the area of natural production forest management and is the signatory of this report. Completed terms of reference are available in Appendix I. The tasks assigned to this consultancy are presented in brief as a point-of-reference for this presentation.

* Assess PT.SBK's implementation of the guidelines covering RKPH, RKL, and RKT.

* Based on an understanding of the field activities of PT.SBK, provide technical recommendations on how to improve the present silviculture, cutting, and harvesting methods of the TPTI system.

* Provide training for PT.SBK staff as required.

The terms of reference are strongly orientated towards an examination of the field practices as they are currently being implemented under the direction of various guidelines and regulations. The intent of the consultancy is to carry out an analysis of these guidelines in the context of an operating forest concession (HPH) and to provide both the concessionaire and the MoFr with recommendations on how to improve the practices involved in natural production forest management.

1.4 PT. Sari Bumi Kusuma (PT.SBK)

PT.SBK is a member of the Alas Kusuma Group which, in 1991 was ranked as the country's fifth largest timber company with concession holdings totaling 1,789,000 ha. P.T. SBK itself owns two concessions as follows:

* PT.SBK (KALBAR) in West Khalimantan
  - established under licence letter KMP No. 125/Kpts-IV/1986
  - total area 66,000 ha.

* PT.SBK (KALTENG) in Central Khalimantan
  - established under licence letter KMP No.666/Kkpts/Um/10 /1979
  - total area 270,000 ha.

It is the SBK.KALTENG concession in central Khalimantan which is the focus of the NRMP's involvement in the natural production forest management. The SBK.KALTENG concession is divided into two physically distinct blocks:

* Seruyan Hulu River Block
  - 186,000 ha of which 180,300 ha is commercial forest.
  - Access development began in 1979/80
  - Logging began in 1980/81

* Delang River Block
  - 84,000 ha of which 73,000 ha is commercial forest.
  - Access development began in 1991/92
  - Logging began in 1992/93

1.5 The Study Area

All observations made during this consultancy relate solely to the Suruyan Hulu block of the PT.SBK (KALTENG) concession.

The Suruyan Hulu block lies on the eastern slopes of the hills which form the border between West and Central Khalimantan. The Sungai, Ketingan, Potai, Pilang, Kaburai, Seruyan Hulu and Derap

River systems drain the very broken and hilly terrain which makes up the Suruyan Hulu block.

Access into this part of the HPH is by way of a major corridor road constructed from the Melawi River, over the western slopes of the hills separating West and Central Khalimantan, and down into the HPH.

Terrain conditions present serious problems in infrastructure development and extraction. The HPH is, therefore, classed as a "limited production forest" which is distinguished from a normal production forest under the Indonesian Selective Cutting and Planting System (TPTI) primarily through the application of a 60 cm minimum diameter felling limit.

1.6 Organization of Report

This is an interim report intended, primarily, to present observations as well as proposals for further action related to the second half of this consultancy.

Detailed analysis and recommendations will be a major part of the final report to be submitted at the end of the second term of this consultancy.

The report has been organized into a number of chapters which reflect the approach used in dealing with the TOR. A brief review of the guidelines covering the long term, 5 year, and annual planning requirements is provided. A more detailed review of the TPTI guidelines is included in the same chapter.

Chapter 3 is the result of observations and discussions and describes the technical detail of PT.SBK's operations in a chronological order.

The fourth chapter is devoted to the specific action proposals which seek to address technical issues arising from the interim examination of the management activities and the MoFr guidelines. The immediate purpose of these proposals is to provide a focus for the second part of this consultancy and to suggest potential benefits to PT.SBK through active participation in implementation.

2.0 REVIEW OF EXISTING GUIDELINES

Descriptions of the existing guidelines for the complete range of planning, forest management, operational and silvicultural practices, have been prepared in a wide range of studies carried out in the forestry sector. It is not the intention to present a detailed discussion of the current requirements in this report, however, a synopsis is provided for the sake of completeness. The main emphasis will be in the subsequent sections of this report were actual practices, as observed at PT.SBK will be described and analyzed in the context of the quidelines.

2.1 Concession Renewal and Issuance of New Concessions

The system of Forest Concessions (HPH) had its beginnings with Government Regulation 21 issued on May 21, 1970. Small licences issued previous to this date have since been consolidated under various arrangements including regulation 21.

Although most of the natural forest resources of Indonesia have been committed to HPH's or to other land uses, a few concessions are still being issued under Ministry of Forestry (MoF) regulation 269/Kpts-II/1989 issued May 30, 1989. This regulation also sets out the procedures for renewal of a concession licence which are slightly different than the requirements for a new concession. Concessions which were due to expire within two years of May 30, 1989, were granted an extension up to May 30, 1991 to provide time for meeting all the requirements of extension.

The conditions for renewal include an approved Long Term Management Plan (RKPH), an approved environmental impact evaluation (SEL), and a 1-5% inventory of the concession. Since many concessions did not have an approved RKPH, the MoF permitted the submission of a Project Proposal under regulation 649/Kpts-II/90. This was basically a simpler version of the RKPH based on interpreted aerial photography and vegetation maps as well as the 1-5% inventory.

The main difficulty has been in obtaining the aerial photographs. Further instructions were issued dealing with interim measures in this regard.

2.2 Long Term Management Plans (RKPH)

The Natural Production Forest Management Consultant, Mr. Ian Armitage, has prepared a detailed description of the requirements for the RKPH. The concessionaire is expected to provide a comprehensive company profile. The plan is expected to report on past and proposed forest management activities including concession boundary establishment, inventory, forest management plans,

logging, silvicultural activities, forest products, marketing, protection, development of local communities, as well as proposals for research and conservation. A 20 year cash flow, profit and loss statements, and production projections are also required. The concessionaire is expected to make commitments regarding protection, conservation, use of lesser known species, development of non wood products, training and dealing with shifting cultivation.

2.2.1 Forest Land Use By Consensus (TGHK)

In 1981, on the instructions of the Minister of Agriculture, the governors of the provinces outside of Java, embarked on a forest land use classification exercise involving the various concerned ministries and departments. In a relatively short time, provincial maps were prepared at a scale of 1:500,000 classifying all forest land under the following categories:

* regular production forest
* limited production
* conversion
* conservation
* protection, or,
* other forest land use.

The immediate impact of this forest land use classification is that it reduced the area available for timber production on all HPHs issued up to that time. Reductions in annual allowable cut (AAC) were, however, not enacted simultaneously with this removal of forest land from the HPHs. In 1991, the Director General of Forest Utilization instructed Dinas and KANWIL to ensure that the remaining unlogged forest be divided into 5 year working blocks based on a 35 year cutting cycle, and that the AAC be reduced accordingly.

Owing to the hurried nature of the TGHK planning and mapping exercise and to the lack of suitable maps and ground data, it has become fairly clear that large discrepancies in land use classification exist. The need to revise this classification, perhaps on a "case by case" basis, has been acknowledged, however, an widely accepted mechanism for this exercise has not yet been developed.

It has been noted that the "conversion forest" category, which in many areas follows the river systems, is the source of a very large portion of the illegal logging since there is virtually no jurisdictional control over these areas.

2.2.2 Determination of Annual Allowable Cut

The RKPH includes a calculation of the annual allowable cut (AAC) as follows:

$$AAC = \frac{A \times V}{35}$$

where:
- A = area of available virgin forest
- V = average volume of commercial species per hectare 50 cm dbh and up (60 cm dbh and up for a limited production forest) from the HPH inventory.
- 35 = cutting cycle.

Since this is a very simplistic equation which does not reflect loss due to waste, breakage, decay or other losses, two correction factors have been introduced which are used to arrive at the Annual Production Quota or Jatah Produksi Tahunan (JPT) as follows:

$$JPT = AAC \times 0.7 \times 0.8$$

where:
- 0.7 = the exploitation factor which is an allowance for decay, waste, and breakage.
- 0.8 = a "safety" factor which acknowledges the damage to the residual stand during logging.

2.3 5-Year Working Plans (RKL)

The RKPH divides the concession area into seven equal blocks, each covering a five year working period. Boundaries of the five year blocks typically conform to the geometric configuration determined by the 100 hectare blocks (petaks) which are the area basis for all subsequent management activities.

A prerequisite for submission of the RKL is a systematic 5% inventory of the five year working block. Prior demarcation of the block boundary is required.

Only commercial species need to be sampled down to a diameter of 10 cm dbh. Data on the stocking of saplings and seedlings of the commercial species is also collected by subplots. Stand and stock tables are produced for the entire five year block area for total inventory data as well as on a per hectare basis. There is no stratification of the inventory.

Two recent adjustments to the regulations governing the preparation of the five year working plans merit elaboration. In 1991, a letter of instruction No. 1291/IV-RPH/1991 issued by the Director General of Forest Utilization, specified that all five year working blocks were to be mapped on a vegetation map based on interpretation of aerial photographs, satellite, or radar imagery not more than two years old. It also required that buffer zones

be left adjacent to national parks, protection forest and water courses. These buffer areas were to be mapped and excluded from the allowable cut calculation of the RKL.

In 1992, the earlier letter of instruction was reenforced by the Minister of Forests in decree 114/Kpts-II/92. This required that all concessionaires submit a new 5-Year Working Plan within one year based on photo mosaics and an interpreted forest cover map of 1:50000 or 1:100000 scale.

The new RKL format requires the submission of no less than 46 tables providing data on the past five years as well as projections for the next five years. Except for statements of management goals and objectives and a description of how the RKPH will be implemented through the RKL, all submissions are in tabular form. The data required includes: a map showing the boundary of the 5-year working block; income and expenditure projections; details of forest management, wood utilization, industrial processing and marketing; organizational structure; equipment and infrastructure; manpower and training; as well as information on the past and proposed activities in community development and research.

The map of the 5 year working block is divided into annual working blocks, generally further divided into 100 hectare petaks. An approximate main road projection is usually included in the map.

2.4 Annual Working Plans (RKT)

In February, 1992 the Director General of Forest Utilization issued new guidelines for preparing, evaluating and approving RKTs. All the same data required in the RKL is again required in the RKT. In addition the results of the 100% cruise and the residual stand inventory is also required along with more detail on the stand tending activities. Except for the statement on forest management objectives and goals, the information required is strictly tabular in nature.

The plan reports on the current year's activities, however, since it is required for approval at least four months prior to the commencement of logging activities, the reporting period does not correspond with the full year.

The RKT is used to initiate many of the operational activities of concession management. It also provides the data and the framework for reporting and cut control.

2.4.1 Reporting

The concessionaire is required to submit monthly, quarterly and annual reports of all TPTI activities as well as quarterly and annual reports of log production. These reports are used to monitor the performance of the concessionaire by comparing the reported achievements against the approved targets. This is strictly an exercise in tabular comparison and contains little flexibility for deviation, irregardless of justification. It also fails to assess the qualitative aspects of the activity.

2.4.2 Cut Control

In theory, a very significant instrument of control is the manner in which the MoFr attempts to force compliance with the regulations by tying harvesting approval to the degree of compliance.

The gross AAC which is calculated for the entire HPH is adjusted periodically to reflect the findings of the 5% inventory carried out for the five year operational plans. This volume is reduced by the "safety factor" and the "exploitation factor" (see section 2.2.2).

The 100% cruise required for the preparation of the RKL is used to set the annual production quota. Both area and volume are used to regulate the annual harvest. This can best be illustrated by example. If a company's annual production quota (JPT) is 5,000 ha or 200,000 cu. m., the anticipated recovery is 40 cu. m./ha. If however, the 100% cruise shows a volume of 50 cu. m./ha., actual production volume is monitored till the JPT volume is achieved and further cutting approval is suspended. In this example, the area harvested in that year would be 4,000 instead of 5,000 ha.

Since there are no controls on the level of utilization during the logging activities, the company has no incentive to make maximum use of the volume cut and will tend to high-grade the stand until it achieves it's annual production quota or it reaches it's annual harvest area target.

A theoretically powerful mechanism for persuading compliance is found in the manner in which the MoFr can adjust the JPT based on evaluation of performance as follows:

$$\text{Approved JPT} = \left(\frac{\text{Administrative Rating}}{100}\right) \times \left(\frac{\text{TPTI Rating}}{100}\right) \times \text{JPT}$$

where:

Administrative Rating is a total score out of a potential of 100 based on the completion of 16 administrative requirements.

TPTI Rating is a total score out of a potential of 100 based on the completion of 4 major activities required under the TPTI system.

JPT = AAC x 0.7 x 0.8 (see section 2.2.2)

The scoring system is based, in part, on submissions required during the course of the year for the administrative items, and on field inspections usually carried out once a year by a joint Dinas/Kanwil team. Dinas reports the results and makes recommendations to the provincial Kanwil who generally endorses these recommendations and submits them to the MoFr in Jakarta. The MoFr then have the discretion to adjust the JPT accordingly.

Although the field inspection requires an independent sampling of the various activities, the sheer volume of the task and the limitation of time and resources make this virtually impossible. The evaluation, therefore, becomes primarily a paper exercise and is easily influenced by subjective considerations, hence, it has the potential to become a major avenue for misuse and a detraction from more meaningful and more objective control of forest management practices. It would be safe to say that if this evaluation mechanism were to be rigorously applied, very little legal logging would be carried out in Indonesia.

2.5 Indonesian Selective Cutting and Planting System(TPTI)

The TPTI system replaces the Tebang Pilih Indonesia (TPI) or, Indonesian Selective Cutting System. It was introduced in 1989 by two decrees, namely; Decree of the Minister of Forests No. 485/Kpts-II/1989 and Decree of the Director General of Forest Utilization No. 564/Kpts-IV/BPHH/1989. The eleven steps which make up the TPTI system are best illustrated in tabular form.

A brief review of the main requirements of these 11 steps is necessary, but first, mention should be made of the underlying assumptions of the TPTI system.

The objective of the TPTI system is to regulate the development and utilization of the natural production forest. Explicit in this objective is the intention to enhance the quality and quantity of wood in the residual forest for future cutting cycles. The most basis assumption is that through the application of this system, a perpetual supply of raw material to the forest industry can be assured without compromising the protective functions of the forest or the basic resources of soil and water.

Table 1 TPTI Activity Schedule

No.	TPTI ACTIVITY	TIME RELATIVE TO FELLING (ET)
1	Working Area Organization (Boundary)	Et-3
2	Inventory Before Felling (100%)	Et-2
3	Infrastructure Establishment (Roads)	Et-1
4	Felling (Logging Activities)	Et
5	Liberation	Et+1
6	Inventory of Residual Stand	Et+1
7	Seedling Procurement	Et+2
8	Planting/Enrichment	Et+2
9	Tending/First Phase	Et+3
10	Subsequent Tending	
	(a) Liberation	Et+4
	(b) Thinning	Et+9, 14, 19
11	Protection and Research	Continuously

The system assumes the following parameters:

* Minimum stocking of nucleus trees before logging is 25 trees/ha. Nucleus trees must be 20 cm to 49 cm dbh and of a commercial species.

* The felling cycle is set at 35 years with an assumed diameter increment of 1 cm per annum.

* Tolerable loss of nucleus trees during initial exploitation is not stated but 10% could be considered as reasonable.

* Mortality of nucleus trees during the cycle is not acknowledged. FAO studies suggest a loss of 1% per annum.

Based on these assumptions, 16 trees with a diameter range of 55 to 85 cm dbh (mean dbh of 70 cm) would be available for harvest at year 35.

2.5.1 Working Area Organization

Working area organization (Penataan Areal Kerja) deals with the procedures for demarcating the annual working blocks and the compartments within these blocks.

Geometric compartments one kilometer by one kilometer square form the basis for implementing and regulating all subsequent

activities. It is stated in the guidelines that petak boundaries established on a geometric basis prior to logging may be adjusted after logging to coincide with natural boundaries such as ridge tops, permanent water courses or roads.

Boundary demarcation, mapping, and reporting standards are clearly defined in the guidelines.

2.5.2 Inventory Before Felling

The guidelines require a 100% cruising of the annual working blocks based on the the 100 hectare petaks. The stand inventory requires the marking, mapping and recording of:

* The species, number and volume of the trees to be felled. Diameter limit is 60 cm for limited production forest, 50 cm for production forest, and 35 cm for swamp and mixed ebony forests.

* The species, number and diameters of nucleus trees (pohon inti) in the diameter range of 20 cm to 49 cm to be left for the next cutting cycle (15 to 34 cm in swamp and mixed ramin forests).

* The species, number and diameters of protected trees.

Sampling and measurement procedures are detailed in the guidelines. Nucleus trees are clearly marked and protected trees are signified by a yellow paint line.

Gross volume tables are used to determine the volume of the main bole up to the first main branch. The volume equation used to generate the gross volume tables is given is given as:

$$V = \frac{D\ H}{4 \times 10{,}000} \times 0.7$$

where:

D = Tree diameter overbark at dbh (1.3 m) or 20 cm above the top of the buttress.

H = Bole length from the ground line to the first major branch or fork.

V = Gross volume underbark for bole length above the stump.

0.7 = Form factor to adjust for taper, bark and volume of the stump.

Stock maps at a scale of 1:2000 are required and must show trees to be cut, nucleus trees, and protected trees.

In general dryland forest conditions, the guidelines require 25 nucleus trees per hectare. Where less than 25 nucleus trees, the guidelines specify the number of pole size trees needed to replace one nucleus tree.

2.5.3 Infrastructure Establishment

Infrastructure establishment (Pembukaan Wilayah Hutan) deals with the planning, location, survey, mapping, construction, maintenance and administrative requirements pertaining to forest roads. Standards for forest roads are given as follows:

Table 2 Forest Road Standards

	MAIN ROADS		SECONDARY ROADS	
	Surfaced	Unsurfaced	Surfaced	Unsurfaced
Road Life	permanent	5 years	3 years	1 year
Period of Use	all year	dry season	all year	dry season
Subgrade Width(m)	12	12	8	8
Running Surface(m)	6 to 8	--	4	--
Depth of Surfacing(cm)	20 to 50	--	10 to 20	--
Max. Favorable Grade	10	10	12	12
Max. Adverse Grade	8	8	10	10
Min. Radius of Curve(m)	50 to 60	50 to 60	50	50
Min. Load Capacity(tons)	60	60	60	60

In general, the guidelines covering infrastructure development deal with most of the essential items necessary to achieve good implementation. There is, however, very little guidance on how to achieve an adequate level of road system planning. In addition, where technical detail is given as in the road standards, technical rationale is lacking.

It is felt that the mixture of very specific technical detail with general statements make the guidelines difficult to implement and do not provide the basis for effective enforcement. Field situations vary a great deal and are dealt with by the industry according to it's interpretation of the guidelines and it's machinery capability.

The guidelines are specific on procedural requirements for obtaining approval and for reporting activities. Dinas deals with all permits and reporting inside the HPH while permits for access roads into the HPH are processed through the provincial level and through the MoFr in Jakarta. Requirements for the mapping of all roads and skid trails are clearly defined.

2.5.4 Logging

The logging activity is the fourth step in the TPTI schedule of activities and is referred to as "Penebangan" or, "felling". This is the reference year (Et) or, year "0" in the schedule of activities which make up the TPTI system.

Felling, in this context, includes felling, bucking, skidding and transportation of logs and is more commonly referred to a logging.

Logging can only be carried out in the annual working blocks as identified in the annual working plan approved by Kanwil.

The guidelines specify the diameter limit according to classification of the forest as production, limited production, or swamp and mixed ebony forests. In the case of PT.SBK, the forest is classed as limited production with a felling diameter limit of 60 cm.

Preservation of biodiversity receives some attention in the guidelines which specify that only trees of commercial species may be cut and trees considered sacred to local people, trees marked as protected in the 100% cruise, trees not marked to be cut, and trees within 50 m of a watercourse, nature reserve, game reserve, or highway or, 100 m from an area of aesthetic or scientific value, or any tree within 200 m from a river or coastline may not be cut. Rivers or water courses are not defined.

The guidelines specify that the stock maps produced in the 100% cruising should form the basis for directing all logging activities in the annual working block and petaks. Although the importance of directional felling is mentioned, no further guidance is given on how the concessionaire is to implement control of the logging activities by using the petak maps.

In general, the guidelines covering the logging are a mixture of general statements of objectives and principles and specific technical detail with no rationale given. There is virtually no basis for objective evaluation or enforcement in the guidelines as they now stand.

2.5.5 Liberation

Liberation is proscribed to be conducted one year after logging with the intention of improving the residual stand by releasing the nucleus trees and commercially valuable trees smaller than nucleus trees from competing vegetation. The guidelines prescribe horizontal releasing to remove bushes, climbers and other low growing vegetation from around the

future crop trees. Vertical release is intended to remove noncommercial and malformed competing trees by girdling or chemical poisoning. It is anticipated that liberation will result in an improved growth rate of the remaining crop trees. There are no indications in the guidelines regarding target stocking levels for poles, saplings or seedlings.

Liberation is done either concurrently or immediately after the post harvest assessment.

Existing guidelines regarding the timing and technical detail of the liberation activity appear to be a common subject of misinterpretation and questionable technical validity for the following reasons.

* Some areas are rapidly invaded by pioneer vegetation while others remain relatively free of competing vegetation.

* Mortality of in the residual stand remains high for the first few years after logging.

* Growth release of seedlings and saplings already existing in the stand can be very rapid after logging.

* Good seed production is know to occur approximately every 4 years in Dipterocarp forests.

* Identification of commercial poles, saplings and seedlings is a major constraint in the successful implementation of the liberation activity.

2.5.6 Inventory of the Residual Stand

The stated purpose of the residual stand inventory is to:

* Determine the stocking of nucleus trees and future crop trees.

* Assess the damage o nucleus trees and protected trees.

* Determine enrichment planting needs.

Sampling takes place over 100% of the logged over area using the same compartment boundaries and sampling strips as the original 100% cruise.

Stocking data is recorded by using a nested plots which sample progressively smaller tree sizes in order to determine the

need for enrichment planting according to the following decision rules. The three sample plot sizes are illustrated in Figure 1.

1. 20 x 20 m plot: If 1 or 2 undamaged pohon inti (20 to 49 cm) of commercial species are present, the plot is considered stocked. If not present, got to . . .

2. 10 x 10 m subplot: If 1 pole size tree (10 to 19 cm dbh), of good quality and commercial species is present in this subplot, the entire plot is considered stocked. If not present, go to . . .

3. 5 x 5 m subplot: If 1 sapling size tree (1.5 m tall to 9 cm dbh), of good quality and commercial species is present in this subplot, the entire plot is considered stocked. If not present, the entire plot is recorded as unstocked.

Pohon inti are numbered and their position recorded. A stock map, similar to the one produced for the 100% cruising is prepared. This map, usually at a scale of 1:2000, should correspond closely with the original petak map for comparison purposes.

Seedlings are not considered in this assessment. There is also no attempt provide an assessment of the brush condition or of the illumination category as a guide to further silvicultural decision making.

Figure 1 Post Harvest Assessment - Sampling Design

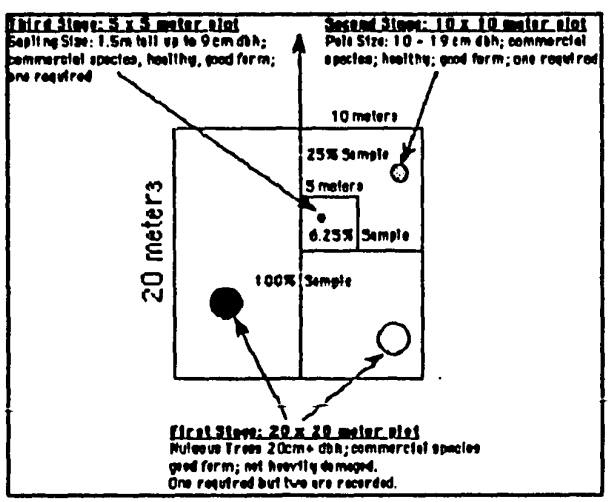

The guidelines set the criteria for determining if a pohon inti has received excessive damage during logging. A tree with excessive damage should not be tallied. This includes trees where:

* The roots have been cut off or one third of the buttress has been damaged,

* There is a scar more than 1.5 m long and one quarter of the circumference of the bole, or,

* 30% or more of crown has been damaged or a main branch or fork has been broken off.

2.5.7 Seedling Procurement

The guidelines require that all concessions establish nurseries to supply planting stock as identified by the residual stand inventory. the guidelines provide detailed instructions on the establishment of nurseries and the rearing of seedlings from seed, cuttings, or from forest stock collected as "wildlings".

Acceptable stock is specified with either local or exotic, light demanding species recommended for skid trails, road sides and landings and native species recommended for enrichment planting needs.

The guidelines also specific that each nursery should be run by a forest technician or forester who has received nursery training.

2.5.8 Planting

Technical guidelines provide a thorough basis for directing the planting of seedlings. Site preparation, use of forest litter as a micorhizal innoculum and other technical detail, is prescribed in publications to assist the concessionaire in this activity.

2.5.9 Stand Tending - Liberation, Weeding, Thinning

The TPTI guidelines (Table 1) break down the stand tending activities into first phase tending and subsequent tending. The first phase involves weeding of the planted seedlings to control competing vegetation and also to replace seedlings which have died. At the same time, a general horizontal liberation is also to be carried out to free nucleus trees and natural regeneration from undesirable competition.

Subsequent tending involves another liberation treatment 4 years after logging. Thinning activities are proscribed 9, 14, and 19 years after logging. No guidance is given regarding the target spacing for the future crop trees.

The technical need for all of the prescribed activities is not clearly established. Technical guidance for the activities are poorly defined, furthermore, the economics of these activities are highly questionable. These factors combined will make universal implementation of these guidelines very difficult to achieve.

2.5.10 Protection and Research

The guidelines require that all concessionaires conduct research which will help them improve yield and sustain timber production on their concession. Both the 5 year and the annual plan guidelines require details on proposed research.

The concessionaires are referred to the Agency for Forest Research and Development (LITBANG) for assistance in developing research projects.

Recent additions for protection requirements call for the establishment of an organizational infrastructure and staffing to meet the needs of protecting the HPH from illegal incursion and from natural threats.

3.0 DESCRIPTION OF PT.SBK ACTIVITIES

The choice of PT.SBK as a cooperant with the NRMP was motivated in part by the fact that the company provided one of the more outstanding examples of compliance with the MoFr standards, regulations and guidelines. An analysis of how the company achieved such a level of compliance, is therefore also a *de facto* analysis of the guidelines.

This section is primarily descriptive in nature and presents in some detail, the various activities of PT.SBK. The activities are covered in chronological order and correspond approximately with the topics covered by the existing requirements and the TPTI guidelines.

A subjective critique of the companies performance together with an assessment of the guidelines which regulate the activities, will be presented in the final report along with recommendations arising out of this assessment.

3.1 Long Term Management Plan

The company has just prepared a new, long term management plan and is in the process of submitting it to the MoFr.

The plan reports on the achievement of the first 13 years and presents various forecasts for the remaining 22 years of the first cutting cycle including a recalculation of the AAC based on the remaining stock of virgin forest.

Declared production figures for the first 13 years are given in section 3.6.1.

3.1.1 Annual Allowable Cut

Despite some reductions to the initial area of the HPH and the production forest area, the company still seems in a good position within the 35 year cutting cycle.

The long term management plan indicates a net available area of limited production forest of 120,405 ha remaining in the 35 year cutting cycle. This indicates an available harvest area of 5,472 ha per year for the remaining 22 years

Cruise figures estimate a stand commercial volume of 8,275,000 cu.m. The company applies a reduction of 80% for both the waste and defect and the safety factor. Annual allowable cut for the remaining 22 years of the 35 year cutting cycle has, therefore, been calculated as:

$$AAC = \frac{8,275,000}{22} \text{ cu.m. } \times 0.8 \times 0.8 = 240,700 \text{ cu.m./yr}$$

The company has projected it's annual production targets for the remaining 22 years at an average of 207,523 cu.m., well below the calculated AAC.

3.1.2 Maps and Photographs

At the close of the first half of the consultancy, aerial photographs were still not available for review. The opportunity to review the maps accompanying the long term management plan also did not present itself, hence the only spatial data of the HPH which has been reviewed was a poor quality satellite image of very little value.

Assessment of the position of the HPH within the 35 year cutting cycle can not be completed reliably without a review of spatial data.

3.2 5-Year Operational Plan

A detailed review of the current 5-year plan will be carried out during the second half of the consultancy.

3.3 100% Cruising

3.3.1 Logistical Commitment

Cruising activities are conducted much as proscribed by the TPTI guidelines. Four, 11 man teams are employed year round to carry out the 100% cruising. Field work is done from forest camps established for approximately one month at a time. This is followed by a month off during which field data is tabulated and plotted in the office. Tree location and measurements are recorded separately from the contour information. One team can complete two (100 ha) petaks during a month of field work.

It appears that PT.SBK conducts 100% inventory for all of it's area. Evidence of tree numbering was seen on all field trips over a wide range of areas.

The Consultant was advised that the cruising teams were on their days off during the visit to the concession, hence field observations of the activities were not possible. The following description of the activities is based on office discussions and a review of the consultancy reports by Jarvie and Cohen.

3.3.2 Implementation

Petak boundaries established during the 5% reconnaissance inventory form the framework for the 100% sampling. The petaks are divided into 50 strips with a width of 20 m each. Tree data is gathered and analyzed on the basis of 20 x 20 m plots along these strips.

Diameter breast height is sometimes measured as circumference and converted to diameter. Diameters of buttressed trees and height to first branch are estimated. Recognizable commercial species are recorded. Protected trees are also recorded as prescribed in the guidelines.

Non commercial and commercial trees considered by the cruiser to be excessively defective, are not tallied

All commercial trees 20cm+ and trees which are prescribed as protected under the TPTI regulations are recorded and tagged. A metal tag giving the petak number, line number and tree number is attached to the tree. Protected trees are signified by a yellow paint line on the metal tag. Non commercial trees are generally not recorded or tagged.

Cruise summary reports (Laporan Hasil Cruising, or, LHC) are prepared on a per petak basis and submitted to Dinas along with copies of the field notes.

3.3.3 Contouring

Although not required in the existing cruising guidelines, the company carries out field contour mapping concurrent with the 100% cruising.

Measurement interval is set at 20m to coincide with the sample plot measurement. Slope is recorded in degrees. Horizontal distance and accumulated horizontal distance is recorded in the field. Vertical difference and accumulated vertical difference is not always determined during the field work. Planimetric detail is sketched in a narrow column opposite the accumulated distance entry and a rough sketch of topography is represented by uncontrolled form lines in the note book. Sketch mapping in the field notebooks is not done to scale.

3.3.4 Mapping

Maps combining the stock mapping and contours are prepared at a scale of 1:1,000. Individual commercial species 60 cm+ are identified on the maps by the use of symbols. Pohon inti (nucleus trees) between 20 - 59 cm in diameter are indicated by a common symbol, not according to species.

Planimetric detail such as streams, swamps, etc. are shown. Contours are drawn in at an interval of 1.5 meters. The starting datum is an assumed elevation. It is not clear where this starting datum is or how far elevations from this datum are being carried. No elevations are given on the maps.

A field check in the active logging area at km 108 showed large inaccuracies in the contour map. The Consultant was advised that prior to 1992, no fixed interval was used when preparing the contour maps. Presumably maps prepared prior to 1992, therefore, show only form lines without relative elevation control and have only limited value for development planning or other map related activities.

The accuracy of the maps produced in the last two years appears to be quite good based on a limited field check. A detailed office review of the surveying and mapping procedures indicates no reason to doubt accuracy of the maps produced since the new procedures were initiated.

The cruisers also use the 1:1,000 petak maps to propose a road location plan. This is subjected to a planning process using adjacent maps as well as a composite planimetric map showing the drainage system but not the contours, at a scale of 1:10,000

Terrain categories are also sketched on working copies of the petak maps. The categories do not appear to have any utility for development planning but seem to be used primarily as a means of monitoring field reports of specific operating problems during the logging activities.

3.4 Road System Planning, Location, Survey and Mapping

Forest road engineering is carried out in the following stages:

1. Plan and paper location made on the 1:1000 petak maps by the cruising crew.

2. Field location by engineering crew.

3. Field survey using hand instruments with ties to the cruise lines and petak boundaries.

4. Construction.

5. As-built survey using theodolite with ties to petak boundaries.

There was no evidence that the company carried out road planning and location according to clearly established standards. The guidelines on infrastructure development which provide some guidance with respect to road standards, appear to be the nominal standard for the company, however, the grade guidelines are largely ignored as can be seen by the excessive road grades on all roads.

The main survey of the forest roads takes place after the road is constructed. This is a fairly high order survey involving the use of a theodolite.

The theodolite survey is plotted using the latitude and departure system. Scale of the plotting is 1:10000 . The plotted roads are then transferred onto the 1:10000 planimetric maps.

Some miscellaneous observations need to be mentioned on the company's survey procedures:

* Road system planning appears to be done on the composite 1:10000 planimetric maps. It is not clear to what extent topographic or other control features influence planning decisions for the road network.

* All surveys are carried out using magnetic bearings. No adjustments for magnetic declination to the plotting and mapping of field data are made.

* Pre and post harvest surveys are carried out using hand held Suuntoo compasses. It is very easy to get incorrect readings from such an instrument when making optical sightings in steep terrain such as exist on the PT.SBK concession.

3.5 Road Construction

Field trips were taken to a road construction site where a minor branch road was being built. Some of the newly constructed roads into the 1993/94 logging area were also visited. General observations while travelling on the road system, completed the picture concerning the road construction at PT.SBK.

This concession is in a difficult access position since the main extraction road has to climb over a low range of hills to develop the entire concession which is down slope from the height of land dividing West from Central Khalimantan. In addition, the road network must cross the headwaters of all the drainages in the concession. This has understandably resulted in a road system which has a lot of adverse grade and a lot of relief in the vertical alignment.

Standard of construction, however is very high. Main roads are well formed, surfaced with river gravel or occasionally with decomposed rock from borrow pits. Prompt and efficient maintenance keeps the running surface and roadway shape in top condition.

3.5.1 Road Construction Standards

In theory, PT.SBK follows the road standards guidelines. In practice, however, maximum grades are frequently exceeded. Favorable grades as high as 35% and adverse grades in excess of 20% have been recorded on many branch roads. PT.SBK has not developed an independent and formalized set of standards designed to guide road system planning, location and construction.

It is not clear to what extent the lack of an overall contour map has resulted in excessive road system grades due to the lack of overall control information. PT.SBK recognizes the importance of improved planning and is moving rapidly in the improvement of it's information base and field methodology.

The lack of formalized road standards within the company plus the well established practice of following ridge tops has resulted in severe road gradients throughout the road network. It is felt that the company has not fully appreciated the impact of excessive gradients on hauling costs, road maintenance cost, and truck maintenance costs as well as reduced productivity. More work needs to be done in developing a more rigorous approach to road location and construction so that all cost factors are brought into the decision making process during road planning and location.

3.5.2 Use of Logs in Road Bed Stabilization

The use of logs in road bed stabilization is common on wet areas or on areas were a narrow saddle or ridge is being crossed. Tree length logs are positioned in the subgrade to form a continuous matte. Fill material is pushed over the matte and capped with a bearing surface of gravel on the main roads. Logs are generally tree length and are taken from the

right-of-way. On many roads it is estimated that this practice consumes the majority of the right-of-way logs, irregardless of species or quality.

3.5.3 Salvage of Right-of-Way Logs

An visit to some of the 1993/94 logging area roads revealed a significant number of logs remaining in the right-of-way. These logs will not have a salvage value when the logging operation moves to the area. Although the company indicated that right-of-way logs were extracted during the road construction process, the amount of logs used in the subgrade construction and observed as one year old logs in the right-of-way, would suggest that any extraction of commercial right-of-way wood represents a relatively low level of recovery.

3.5.4 Drainage Structures

Side drains are well constructed and maintained. The undulating nature of the topography results in frequent opportunities to direct run-off water away from the road. A problem, however, does exist with respect to the installation of cross drains and the construction of major drainage structures.

Except for the occasional use of hollow logs or the random placement of logs across the road alignment during construction, no attempt is made to install properly constructed or premanufactured culverts. The result is the frequent ponding of water along all roads and the resulting loss of growing site. Although these ponds act as settlement areas for soil eroded from the ditch line, it is felt that they are unnecessarily large.

Very little attempt is made to preserve natural drainage. This is considered to be primarily a problem of perception. The need to maintain natural drainage with adequate cross drainage structures has not been acknowledged and is lacking in the company policy on road construction.

3.5.5 Some Road Data

The company has penetrated deep into the concession in the early years of operation and is now forecasting a reduction in the annual road construction targets for subsequent years.

In 1989 and 1990, the company reported road construction as follows:

	1989	1990
Total Road Construction	50.50 km	51.37 km
Total Area Developed	5,300 ha	4,300 ha
Road Density	9.53 m/ha	11.95 m/ha

Projections for the 8 year period beginning in 1993/94 show an average annual road construction target of 34.8 km with an average development of 5,348.9 ha/yr. This results in an average road density of 6.51 m/ha. Certainly some variation could be anticipated due to differences in terrain conditions, however, the fact that these are only projections may be the primary explanation for such a major reduction.

3.6 Logging

A number of visits were made to active logging areas on the concession. The observations made during these field visits together with discussions with company staff, form the basis for the following sections.

3.6.1 Production Report

For the first 12 years of operation on the PT.SBK (KALTENG) concession, logging occurred only in the Seruyan Hulu block which represents approximately 71% of the total commercial forest area.

Declared production figures are as follows:

Table 3 Annual Production Achievements

Year	Area (ha.)	Volume (cu.m.)	Vol./ha. (cu.m.)
80/81	195	14528	74.5
81/82	1421	96535	67.93
82/83	1035	87967	84.99
83/84	2500	103063	41.22
84/85	4250	168666	39.69
85/86	4300	136520	31.75
86/87	4200	109361	26.04
87/88	3200	118864	37.15
88/89	2800	136874	48.88
89/90	5000	181256	36.25
90/91	4300	198820	46.24
91/92	4300	210822	49.03
Total	37501	1563279	
Average	3125	130273	48.64

At 71% of the total area and an assumed equivalent representation of the total AAC, logging to-date has been well within the limits for the Seruyan Hulu portion of the HPH where the proportional annual volume and area allocations would be expected to be 3,885 ha and 170,900 cu.m. respectively.

3.6.2 Production Planning

The 5% inventory conducted at the 5-year planning stage, identifies the annual production blocks and estimates the anticipated volumes as the first stage in the production planning.

One year before logging, a 100% cruise is conducted. The information generated by this cruise should theoretically guide all subsequent production planning, control and monitoring. Examination of the 100% stock maps showed a very uniform distribution of commercial stems.

Although the company acknowledged the theoretical purpose of the stock mapping, there was also an acknowledgement that the stock maps contribute very little to planning or implementation of the logging activities. The notable exception is the utility of the contour maps produced simultaneously with the stock mapping. There seemed to be a very well developed recognition of the value of this contour map for road planning and location. At this point in time, however, the utility of these maps appeared to end with the planning and location of the road system. It is felt that a great deal of potential exists for day-to-day use of these maps in logging planning and control and for subsequent post logging activities.

3.6.3 Organization of the Work

All aspects of the logging activities are under direct company control. Field activities are controlled on a petak basis. Logging areas are assigned to a production crew consisting of a faller, his helper and a bulldozer for skidding the logs to road side. Once the area has been allocated, the crew is free to develop and work the area as it sees fit.

No attempt is made to use the 100% stock maps to control or plan any of the logging activities.

The logging crews are paid on a production basis.

3.6.4 Felling and Bucking

A faller works progressively through his assigned area felling all commercial trees greater than 60 cm in diameter as long as they do not have the yellow strip on the zinc tag designating them as a protected tree, and, as long as in the opinion of the faller, the tree will yield a reasonable volume for his efforts. If the faller thinks that a tree marked for felling is too defective, he will not cut it.

Trees are generally felled downhill on sloping terrain since that is the usual direction of any existing lean. Once felled, the tree is bucked into logs according to a rough estimation of what the bulldozer can pull. The maximum log length is 15 m if the diameter is 70 cm or less. Shorter logs are cut in bigger diameter wood.

The company imposes very strict bucking standards. Tolerance for defect is very low, resulting in significant portions of the main bole of the tree being left in the forest or bucked off at the landing. Field supervisors indicated that fallers were strictly controlled in this matter and that they would not get paid for sections of the log which did not meet the tough quality standards.

It is not clear why high grading occurs. It is, however, clear that the industrial plant at Pontianak is not a constraint in terms of being able to utilize the wood now being left in the forest. A proposal to quantify the magnitude of this apparently avoidable waste is included in section 4.0 of this report.

3.6.5 Log Measurements, Numbering and Production Reporting

Logs are debarked at road side to reduce the danger of beetle attack.

Logs are measured and volumes taken from government issued volume tables. Defect deduction is made according to prescribed procedure. Logs are numbered on both ends using paint and a company hammer mark is stamped on the ends.

The information painted on the logs is illustrated in Figure 2.

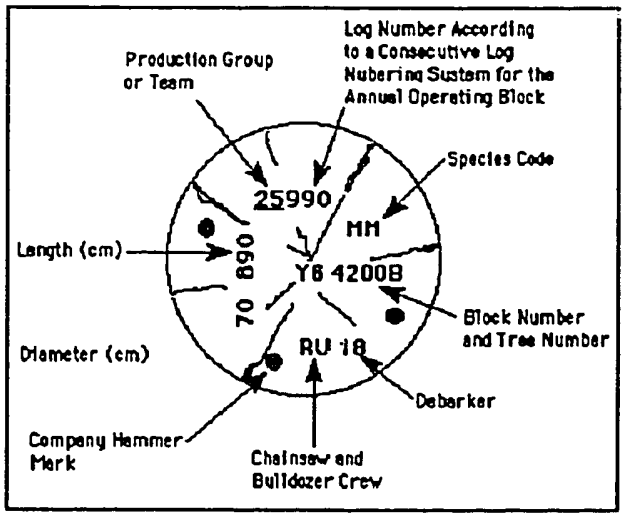

The block and tree number is recorded on the production report document (LHP) and is a continuation of the recording process initiated with the LHC, or cruising report.

The company also numbers each log consecutively for the year's production area by production teams for internal control purposes.

3.6.6 Royalty Assessment and Monitoring

Royalty is assessed according to the measurements taken for the LHP. A Dinas inspector is supposed to be in the active logging area at all times. A second Dinas inspector is stationed at the logging administration headquarters at kilometer 35. His job is largely administrative and he is required to sign off all LHP and log transportation reports (SAKB) which must accompany each log movement.

3.6.7 Transportation

Prior to loading, "S" nails are driven into the ends of the logs in an attempt to minimize end checking.

The company operates two fleets of logging trucks. Six wheel drive, fixed chaises trucks are used to forward the logs from the logging area to a central log yard. These trucks are capable of operating under extreme road and weather conditions

and enable the company to keep it's production going in all but heavy rain.

The current logging area is centered around 109 kilometer. The main log yard is at 94 kilometer with a secondary log depot at kilometer 54. Sorting at the log depots is done on the basis of "floater" and "sinker" logs and are handled separately during all subsequent transport.

The main trucking fleet consists of Renault CBH 280 and CBH 350 conventional long haul trucks with a carrying capacity of 50 to 60 cubic meters. Logs are transported from the kilometer 94 depot to the log pond or to the kilometer 54 depot depending on weather conditions along the transportation corridor. The fixed chaises trucks are also used to haul oversized logs directly to the log pond.

At the log pond, floaters are formed into small rafts and moved downstream to Sintang where they are reboomed into larger rafts for the final transport down to Pontianak. Sinkers are stockpile and transported on barges direct to Pontianak. Each log boom is accompanied by a SAKB documenting the pieces, volumes and species.

3.7 Post Logging Activities

3.7.1 Inventory of the Residual Stand

PT.SBK conducts a residual stand inventory in the year following logging. As far as could be determined, all logged areas are inventoried and the procedures prescribed by the TPTI guidelines are closely followed.

Logistical Commitment

The Company's commitment to this activity is demonstrated in part by it's staffing arrangements. Three inventory teams totaling 27 men are engaged full time in the residual stand inventory. A team is divided into two, four man crews which split the functions of line establishment and data collection. The nineth member of the group is engaged as camp attendant.

In general, the crews spend a month in the field and then take a month off. During the office days, the crew leaders compile the results of their previous months work and produce the petak maps. A crew is expected to cover three petaks per month of field work (300 hectares).

Sampling Design and Criteria

Based on a verbal description, general TPTI procedures are followed. Original petak boundaries are reestablished and on-line trees are marked with blazes and red paint. The petaks form the basis for all post logging assessment. The sampling design matches the 100% cruising. The petak is divided into 20 meter wide strips and the following sampling intensity and decision making criteria is applied to the systematic assessment of the logged over area. (Figure

1. **20m x 20m plot for pohon inti (nucleus trees).** Size range is 20 cm Dbh and up. Bole height to the first branch is estimated. Sampling intensity is 100%. Although the plot is considered stocked if one pohon inti is present, the cruiser will select and record the best two trees.
   If no pohon inti is present;

2. **10m x 10m subplot for pole size trees.** Size range10 - 19cm Dbh. Sampling intensity is 25%.
   If no pole size tree is present;

3. **5m x 5m subplot for sapling size trees.** Size range 1.5m tall to 9cm Dbh. Sampling intensity is 6.25%. If no sapling is present, the 20 x 20m primary plot is considered unstocked and is indicated with an "X" on the petak map.

Theoretically, only trees of good quality should be recognized. It was noted, however, the selection of pohon inti commonly included trees which, although of commercial species, would be considered of noncommercial form or quality if present harvesting criteria were applied. A maximum of two pohon inti are recorded per plot.

It was stated that all pole and sapling size trees of commercial species are recorded if the second or third stage sampling is required. Observations in the field did not confirm this. Each stage of the sampling requires that only one suitable tree be available for the sampling to stop at that stage. Trees which are considered as protected or sacred are included in the tally. In the case of PT.SBK, these include Tengkawang, Durian and Ulin/Belian.

All measurements are estimated and are very approximate.

A subjective assessment of damage and form is applied as specified in the guidelines. Trees which exceed the allowable damage criteria or which are of poor form are theoretically

not considered in the assessment. The extent of compliance with this subjective assessment criteria appears to be low and is not reflected in any tabular form.

Data Presentation

A petak map is prepared at a scale of 1:2,000. This map is divided into 20m wide strips and shows the following information. Tree information is represented by symbols.

1. Roads and major skid trails apparently sketched to scale,
2. Swamps/ponds sketched to scale
3. Streams
4. Nucleus trees (pohon inti) 20 - 49cm; Dipterocarps/Non Dipterocarps
5. Mature trees (pohon induk) 50cm+; Dipterocarps/Non Dipterocarps
6. Pole size trees(permudaan tingkat tiang) Dipterocarps/Non Dipterocarps
7. Sapling size trees (permudaan tingkat pancang) Dipterocarps/Non Dipterocarps
8. An "X" represents a 20 x 20m plot which has no stocking (not including the nonforested features identified above.

The petak map is accompanied by a tabular summary consisting of three tables.

Table 1: Summary of Pohon Inti

Tree numbers and volumes are recorded under five diameter classes; (20-29, 30-39, 40-49, 50-59, 60cm+) against three broad categories of trees; Dipterocarp, Non Dipterocarp and Other Commercial. These classes area each divided into "floaters" and "sinkers" and individual species are further broken out under these headings. Totals are included for all categories.

Average numbers and volume per hectare are also given in this table, however, this average is only for the 20 x 20m plots which have a pohon inti. The result is invariably that the average number of pohon inti is 25 and the average volume per hectare is quite high since it is not representative of the total petak area.

Table 2: Report of the Average Number of Trees per Hectare For Pohon Inti, Poles, and Saplings.

The averages are given by the individual species identified in Table 1. The "miscellaneous" category represents a very large percentage of the total. In the petak examined it was about half of the total for the pohon inti and approximately 78% for the pole and sapling sizes.

The total average is expressed as the total minimum stocking requirement, for example, it is 25/ha for the pohon inti, 100/ha for poles, and 400/ha for saplings. The individual average values for each size category and species are therefore, very misleading.

This report conforms to the regulations which require that minimum stocking levels be achieved.

Table 3 Report of Non Stocked Area

Unstocked area in hectares is summarized for each 20m wide strip according to two categories "disturbed" and "undisturbed". The disturbed area includes roads, skid trails, rivers, streams and ponds while the undisturbed area represents areas which simply do not have a suitable pohon inti, pole or sapling.

In the examples viewed, totals were not provided.

This is useful data but it does not differentiate between "permanently non productive" and "temporarily non productive" or unstocked. Road surfaces, water courses and water bodies could be considered permanently non productive while skid trails and roadside spoil material are usually planted up and should be considered simply as unstocked. Although this table is presented in accordance to the guidelines, PT.SBK does use the original data to calculate the number of seedlings required to plant up the skid trails and other disturbed sites.

The three tables together with the map could provide potentially valuable data for planning subsequent silvicultural activities and for assessing the condition of the stand. There are, however, some problems with the presentation of the data which tend to portray a misleading image and make the data of marginal utility for any subsequent decision making or silvicultural assessment.

The utility of the 100% post logging assessment in meeting any of the objectives of improved forest management is highly questionable since:

* lot of data but very limited use of data
* no analysis
* imprecise measurements
* incomplete measurements
* no recognition of seedlings (under 1.5m) and yet if saplings are not available, planting of seedlings is prescribed.
* very incomplete assessment of soil disturbance

3.7.2 Forest Nursery

Logistical Commitment

As part of it's commitment towards fulfilling the TPTI guidelines, PT.SBK has established three nurseries. The main nursery is located at the old logging camp at kilometer 54. Field nurseries are also located at kilometers 73 and 93 on the presently active logging road. These nurseries are designed to meet the needs of planting up road sides, old skid trails, heavily disturbed sites, and enrichment planting within the general forest area. The nurseries are well maintained and appear adequate for the intended purpose

The three nurseries are manned by five supervisors and the ongoing work is carried out by laborers hired according to need.

Nursery Production

Nursery stock originates from a variety of sources. Exotics such as Sengon (Albizia) and Gmelina are planted as seed which is obtained from sources in Pontianak, Bogor and other locations as available. Certain species, particularly from the Meranti group, are collected as wildlings. Gmelina and Sungkai are also propagated from cuttings.

Some local seed collection is carried out. Seven seed and wildling collection areas have been identified based on the abundance of suitable species and the quality of the growing stock.

Table 4 indicates the range of species cultivated in the PT.SBK nurseries. Tables 5 and 6 give an indication of the size of the nursery programme. Data is obtained directly from internal reports on nursery production. Additional reports are prepared showing the details of the seedling disbursement to the planting areas (petaks) as well as additional mortality which occurs during transportation and field storage.

Table 4 Species Cultivated in PT.SBK's Nurseries

Species	Local	Exotic	Propagation Method	Comments
Meranti (red/white)	x		wildling, some seed	enrichment planting; partial shade preferred
Sengon (Albizia) (Parashoreanthes falcataria)		x	seed (external source)	disturbed open area
Podocarpus	x		wildling	disturbed open area
Gmelina		x	cutting	disturbed open area
Stergulia sp.	x		wildling	disturbed open area
Sungkai	x		cutting	disturbed open area
Lamtorogung		x	seed (external source)	disturbed open area
Tengkawang	x		seed	enrichment planting/ bina desa
Kempas	x		wildling	disturbed open area
Bengkirai	x		wildling	enrichment planting
Rotan sega	x		seed	distribution to bina desa
Rambutan	x		seed	distribution to bina desa
Durian	x		seed/fruit	distribution to bina desa
Ulin	x		seed	not yet planted out
Keruing	x		wildling	enrichment planting

Table 5 **Nursery Production for 1992/93**

Species	Nursery	Production	Mortality	Distribution	Year End Stock Balance
Meranti	54 km	97,834	4,822	54,252	38,260
	73 km	56,867	7,651	47,516	1,700
	93 km	29,031	4,713	23,143	1,175
Sengon (Albizia)	54 km	44,435	13,977	20,402	10,056
	73 km	103,974	12,330	85,442	6,203
	93 km	50,397	10,295	40,102	-
Podocarpus	54 km	2,882	339	2,163	320
Gmelina	54 km	2,882	1,963	1,260	1,064
Stergulia	54 km	3,314	-	25	3,289
Sungkai	54 km	10,546	-	6,406	4,140
Lamtorogung	54 km	875	-	-	875
Tengkawang	54/73 km	3,270	341	405	2,532
Kempas	73 km	4,000	-	-	4,000
Bangkirai	73 km	12,000	-	-	12,000
Totals	All	**422,307**	**56,131**	**281,116**	**85,614**

Table 6 **Nursery Production for 1993/94 (up to September)**

Species	Production	Mortality	Distribution	Year To-Date Stock Balance
Meranti	99,665	3,107	10,993	85,565
Sengon	166,505		46,700	119,805
Podocarpus	5,040			5,040
Gmelina	1,935	60	36	1,839
Stergulia	3,289			3,289
Sungkai	6,103	100	4,083	1,920
Rotan soga	2,018			2,018
Rambutan	400		70	330
Durian	2,166		10	2,156
Bangkirai	28,143	463	1378	26,302
Tengkawang	1,634	863	521	250
Keruing	1,690		50	1,640
Ulin	54			54
Kempas	3,157			3,157
Totals	**321,799**	**5,279**	**64,144**	**244,376**

Trials at vegetative propagation of Meranti, Tengkawang, Bangkirai and Keruing have recently been initiated. Rooting hormone is applied to leader cuttings with very promising results. Cutting stock has been planted in order to conduct further vegetative propagation trials.

Arboretum

A natural arboretum is being developed at 54 km. Labels for many of the native species are already in place and limited planting of both native and exotic species have been established. Regular measurements are taken of selected trees to monitor growth. The arboretum could form an excellent basis for training in species identification.

3.7.3 Liberation and Planting

Liberation

Liberation is usually carried out immediately after the 100% post logging assessment. This is a horizontal weeding which appears to have very limited utility in achieving any of the desired silvicultural objectives. The first liberation treatments were begun in 1990.

An on-going liberation activity was visited. The area had been logged in 1992/93. Pioneer and scrub vegetation was well established with pioneer tree species along the roadsides already as tall as five meters. Successful regeneration and sapling release of commercial tree species was in strong evidence. Unfortunately the liberation cutting appeared to be misdirected in that virtually all new vegetation and much of the sapling size trees were cut. The primary guiding principle seemed to be that if it could be cut with a parang, it was cut. The effect was one of retarding the recovery process rather than assisting it.

Vertical liberation is not generally carried out. A chemical poisoning was conducted on approximately 100 trees in the past few months. Evaluation of the trial has not yet taken place.

Planting

First plantations on the PT.SBK concession were established in 1986/87 when a 1000 ha Meranti enrichment plantation was established in the general vicinity of km 53. This plantation was set out under the HTI programme. Skid trails and road sides were planted up with Eucalyptus sp. Maintenance activities were carried out on the plantation for the next two years.

In 1989/90, planting began under the TPI programme. In the next year the planting programme was modified according to the regulations introduced in the new TPTI guidelines.

Table 4 indicates the site conditions in which the various nursery species are planted out. The general spacing rule is 5 x 5m for enrichment planting and 3 x 3m for planting on the skid trails and other heavily disturbed sites.

The planting activities appear to take place promptly (Et+2) according to the requirements in the regulations. The most obvious sign of planting is along the road sides and skid trails. Tree positions are marked by sticks at 3 x 3 m spacings. Holes are dug into which is placed a small amount of organic matter from the surrounding forest. Leaf mulch is often placed around the planted seedling on the very exposed sites.

3.7.4 Stand Tending

Stand tending activities in PT.SBK did not start till 1990 following the introduction of the TPTI guidelines.

Weeding takes place in Et+3 and Et+4. Table 7 gives the accomplishments for the various silvicultural activities. The 1993/94 entries are target data.

Table 7 Silvicultural Activities

	Seedling	Area	Planted(ha)		
Year	Production	Disturbed	Enrichment	Liberation(ha)	Weeding(ha)
91/92	285000	121	234	3100	1500
92/93	423000	161	395	3300	2100
93/94	296000	130	130	3100	4300

Two visits were made to a site which had been liberated, planted, and weeded. Large areas remained unstocked since the regeneration had been cut during these tending activities. It is felt that:

1. The staff in-charge are uncertain as to the objectives of the guidelines covering both the liberation and stand tending activities, and,
2. A serious problem of species identification exists in the labour force being employed to do this work.

It is very clear that the practice of liberation cutting and weeding as presently being carried out by PT.SBK is not achieving any of the desired management objectives, in fact, it is retarding stand rehabilitation and regeneration.

3.7.5 Research

PT.SBK has taken a number of initiatives in establishing growth studies which should be mentioned. In addition to the numerous measurements being taken around the camp 54 km and the adjacent nursery on both native and exotic species, the following studies are of particular significance.

Permanent Sample Plots

Two hundred permanent sample plots have been established to measure growth of selected trees in an 800 hectare area. A field visit was made to view the implementation of the plot establishment in two of these plots in petak number 662.

The objective of the study is not very clear. It would appear that it is limited to monitoring growth of selected commercial species in the natural, logged over forest. Guidelines for establishment of the plots were received from the Pontianak office although it is not clear whether the sampling design and criteria follows any procedure set down at a national level.

Background Data

* General area location is between kilometers 67 and 74 along the main active logging road.
* Eight contiguous petaks were chosen as follows: Petaks no. 633, 662, 695, 696, 734, 774, 775, and 815.

Sampling Design

* Plots were randomly distributed according to subjective criteria. The plot area had to be forested, contain a mixed stocking of the different sizes to be sample, and not include a road, skid trail, swamp, river or other disturbed or nonproductive area.

* Trees of different size categories are selected, tagged and measured using nested plots as follows:

* Pohon inti (20 cm+ dbh) two trees per 20 x 20 m plot

* Poles (10 - 19 cm dbh) one tree per 10 x 10 m plot; 4 plots per 20 x 20 m plot.

* Saplings (1.5 m tall - 9 cm dbh) one tree per 5 x 5 m plot; 1 plot per 10 x 10 m subplot

* Seedlings (less than 1.5 m tall) one tree per 2 x 2 m plot; 1 plot per 5 x 5 m subplot

  Therefore, in each 20 x 20 m primary plot, the following number of trees are selected, measured, and monitored.

  2 pohon inti
  4 poles
  4 saplings, and,
  4 seedlings.

* Selection criteria for choosing a tree for each category in order of diminishing priority: meranti, other dipterocarp, major other commercial, minor commercial species. All trees chosen have to be healthy and of good form

Measurements

* Pohon inti and pole size trees have a dbh line painted around the tree at 1.3 m above point of germination or 20 cm above buttress.

* Total tree height is measured for all categories.

* Diameter is measured for seedlings and saplings at 20 cm above point of germination or at dbh if first branch is above 1.3 m.

* A metal tag is fixed to the tree. Information on the tag includes petak number, plot number, tree number, diameter, and height.

* Three measurements have been taken thus far. For each measurement, a tag is placed on the tree. An obvious bias exists since the measurer can see the results of the previous measurement in the field.

Future Plans

The plots will continue to be measured on an annual basis. An interest has been expressed to expand the permanent sample plot network although there seems to be some uncertainty regarding the best design, procedure, and objective of such a commitment.

Survival and Growth

In 1987 a 100 ha area was systematically enriched with meranti mera in the 53 km area using a 5 x 5m spacing. The original planting lines are being maintained and a comparative growth study was initiated to determine the relationship between growth and various site variables such as competitive vegetation and edaphic variations.

A systematic study of meranti (both red and white) has been established in the km 57/58 area not far past the proposed research station. This study is referred to as:

Complete Harvesting and Regeneration Study

Pertinent background and design information concerning this study are:

* General area logged in 1983/84.

* Study area prepared in 1990 and planted in 1991.

* Study divided into six adjacent blocks measuring 500 x 250 m; three of the blocks are aligned North/South and three are aligned East/West.

* In each of the six blocks, six "treatment" strips, each 10 m wide and evenly distributed, have been established along the longitudinal axis of the blocks. These treatments consist of two duplications of:

  1. removal of all trees 20 cm+
  2. removal of all trees 30 cm+
  3. removal of all trees 60 cm+

* A two meter wide line has been cleared in the center of each strip and planted with meranti (both red and white) at two different spacing intervals; 5 m and 3 m.

* Manual weeding is carried out every six months on the two meter wide strips.

* Height and diameter measurements are taken on 25% of the the strip lines planted with meranti.

* Adjacent natural meranti regeneration is also measured for comparative purposes. Criteria for their selection could not be ascertained.

* A 1:5,000 area map and 1:1,000 block maps of the study have been prepared.

Measurements are ongoing and no definitive results have been released. The following comments and observations can, however, be made.

1. This study, along with other research efforts reviewed during the field tour, demonstrates a keen interest and considerable level of sophistication on the behalf of PT.SBK to further the basic knowledge of forest management and silvicultural issues within the context of an operational HPH.

2. It was noted that natural regeneration of both the planted species was very abundant in the study area and appeared to be growing better than the planted stock in many areas.

3. It was noted that the removal treatments were very narrow and that trees from the adjacent leave strips strongly influence the amount of light reaching each treatment. The validity of the design for these treatments is therefore questionable.

4. A high percentage of mortality was noted in the planted stock. Cursory observations suggest that the mortality was highest in heavy shade areas.

5. It is not know if illumination was considered in the original data collection. Research data from other tropical growth and survival studies suggest that the amount and quality of illumination can be a significant factor in survival and growth.

Miscellaneous

Around the camp area at Km 54, a number of small plantations have been established which are being monitored. Exotics such as Sengon, Gmelina, and Eucalyptus sp. (deglupta) have been planted along with local pioneer species and a variety of commercial species. Two areas totaling approximately 1.5 ha were planted with Sengon (Albizia) in 1990 and underplanted

with Red Meranti in 1992. Various other small trials with different species and varied spacing have been established in the vicinity of the camp.

4.0 STUDY PROPOSALS

The study proposals were developed after extensive observations of the management practices and operational activities and after lengthy discussions with numerous PT.SBK staff.

The proposals address some of the issues arising from these observations and are intended to produce tangible benefits by:

* Generating data which will help to convince company officials to improve management practices for both immediate economic benefit and towards achieving sustainable forest management.

* Providing a better, factual basis for further analysis of the TPTI guidelines with the ultimate intention of providing specific recommendations for improvements to the guidelines.

The study proposals are presented as "stand alone" entries in this report.

STUDY PROPOSAL No. 1

STUDY

Name: Quantification of Avoidable Logging Waste

OBJECTIVE

Objective:
To quantify the volume of waste left in the forest or at road side due to the present bucking standards.

Benefit:
Lower the fixed, per unit volume costs such as road construction, road maintenance, skidding, etc. through improved recovery and volume production.

Implications:
Either an increase in the AAC or an extension of the supply of old growth timber beyond year 35 should be actively pursued if a significant potential for improved recovery can be demonstrated.

If company management is convinced of the desirability of improving forest utilization, new bucking rules would have to be adopted to guide the felling activities.

Overall economic benefits include greater government royalties and increased "down stream" benefits through employment in manufacturing and in export revenue.

RATIONALE

Logging waste is a topic discussed by virtually every study conducted in the forestry sector in Indonesia. Estimates of 30% or more are commonly attributed to logging waste left in the forests yet hard data is virtually impossible to find.

Field observations at PT.SBK suggest that a very significant potential exists for improving the recovery of the primary stem volume. It is felt that improved recovery through the control of bucking standards can have an immediate beneficial effect in terms of lowering the fixed costs of road construction and maintenance as well has helping reduce some of the other logging costs.

Less obvious but just as real, are the longer term benefits of obtaining either an increase in AAC through better utilization

or, of extending the life of the old growth volume. The implications for the revenue side are equally significant.

Primary stem volume waste at PT.SBK occurs in two stages. Firstly, through the application of very high quality bucking standards which leaves a large portion of the main stem volume in the forest, and secondly, by end checking of the logs during transportation. By lowering the bucking criteria in the forest, it is felt that the overall recovery of first quality wood can be significantly improved since the losses due to end checking during transportation will be incurred in the slightly poorer quality wood rather than in the best quality wood. (see illustrations).

An examination of the industrial complex at Pontianak indicates that a great deal of flexibility exists in utilizing main stem volume which is presently being left in the forest. Extraction of this volume would, however, have to be as part of existing logs due to the economic constraints of transporting short wood.

By conducting a study to quantify the main stem volume presently being left in the forest, it is felt that an economically convincing argument can be developed for improving present utilization standards.

IMPLEMENTATION

Methodology:

1. Definition of "Avoidable" Waste: Meet with SBK in Pontianak to prepare first draft of improved utilization criteria(bucking guidelines) which would form the basis of assessing avoidable waste.

2. Choice of Study Area: Chose study area based on operational maps. Study area should be at least 20 hectares in which all logging has been completed within the past few months.

3. Field trip to study area to calibrate the revised utilization and measurement criteria.

4. Implementation: Demarcate the study area and set up a systematic sampling procedure.

   Visit all skid trails and all felling sites in the study area and measure all wood which should have been recovered under the revised utilization criteria.

   Measurements to be conducted as per existing procedures.

Volume calculation and deduction for defect to be carried out as per existing procedures.

5. Compilation of Data and Summary Report

6. Presentation of Findings

Manpower requirements: (SBK & NRMP):
Two measurement crews will collect data under the supervision of the consultant. Each crew will be headed by a technical person from SBK and NRMP and will require a maximum of two labours per crew.

NRMP - Consultant plus two technical support staff.
SBK - Two technical counterparts plus 4 laborers.

Material requirements:
Measuring tapes, note books, pocket calculators, volume tables.

Activity Schedule:

No.	Activity	Days	Location
1.	Definition of avoidable waste	4	Pontianak
2.	Choice of study area	1	km 35 office
3.	Field trip	1	study area
4.	Implementation	10	study area
5.	Data Compilation	4	km 54 camp
6.	Presentation	1	Pontianak

Total time required to complete the study (including travel) is estimated at four weeks.

EXPECTED OUTPUT

1. A brief report outlining the objective, rationale, methodology and results.

2. A draft submission of "bucking standards" which would be needed for implementation at the field level.

3. An estimate of the "volume per hectare" waste which could have been extracted under the proposed bucking standards. If the potential for improving volume recovery is found to be significant, further action regarding implementation will be at the discretion of PT.SBK management.

Figure 3 Waste Categories

CLASSIFICATION OF LOGGING WASTE

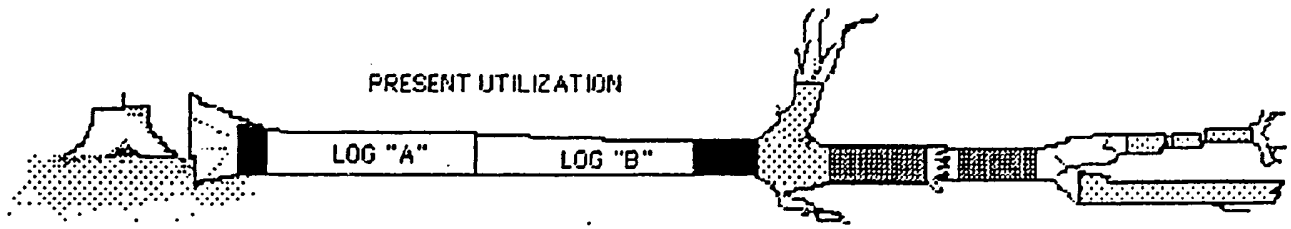

CLASS I or "AVOIDABLE" WASTE

CLASS II WASTE - unavoidable under current grading rules and company standards except in special situations.

CLASS III WASTE - unavoidable for the foreseeable future; special economic conditions required for utilization.

Figure 4 Utilization Waste - Class I

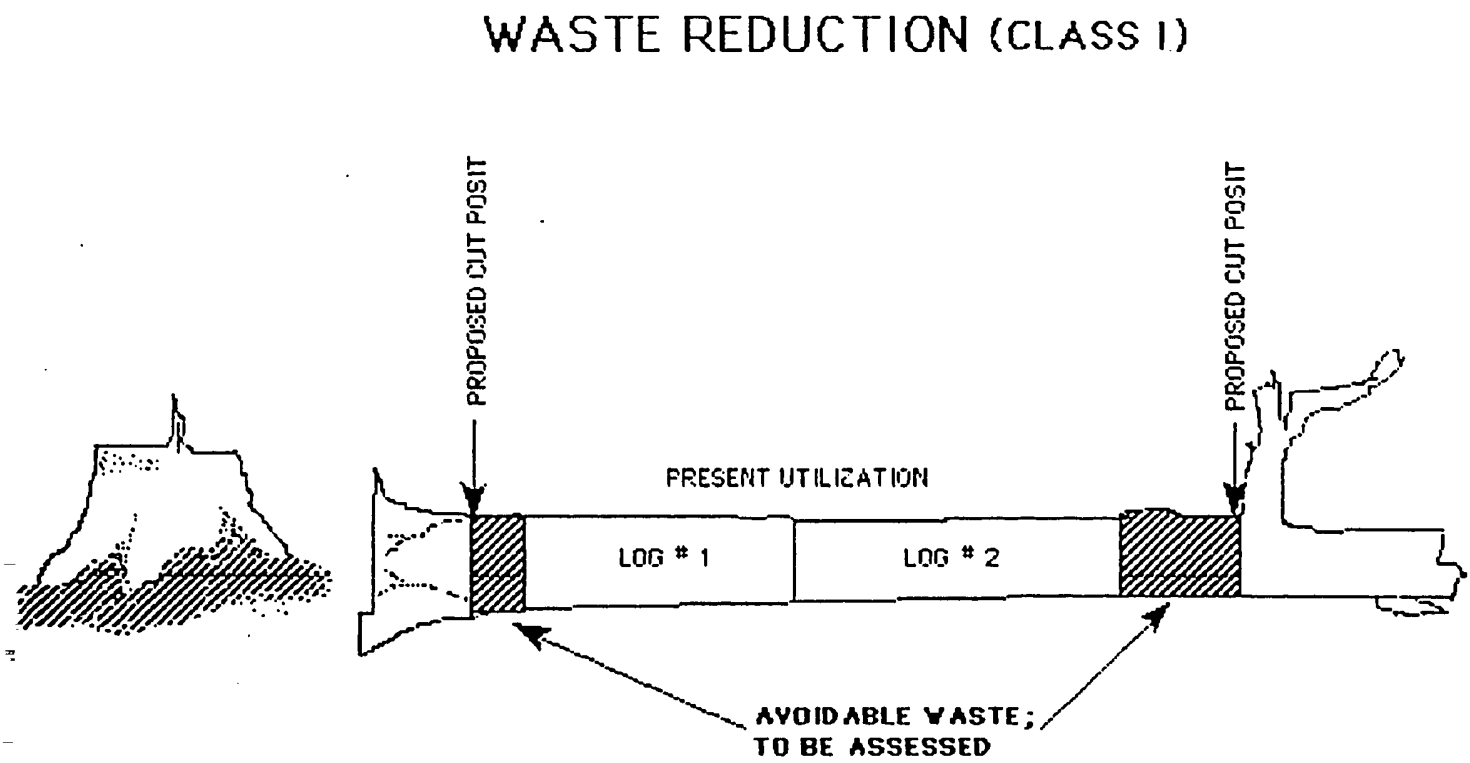

Figure 5 Transportation Waste

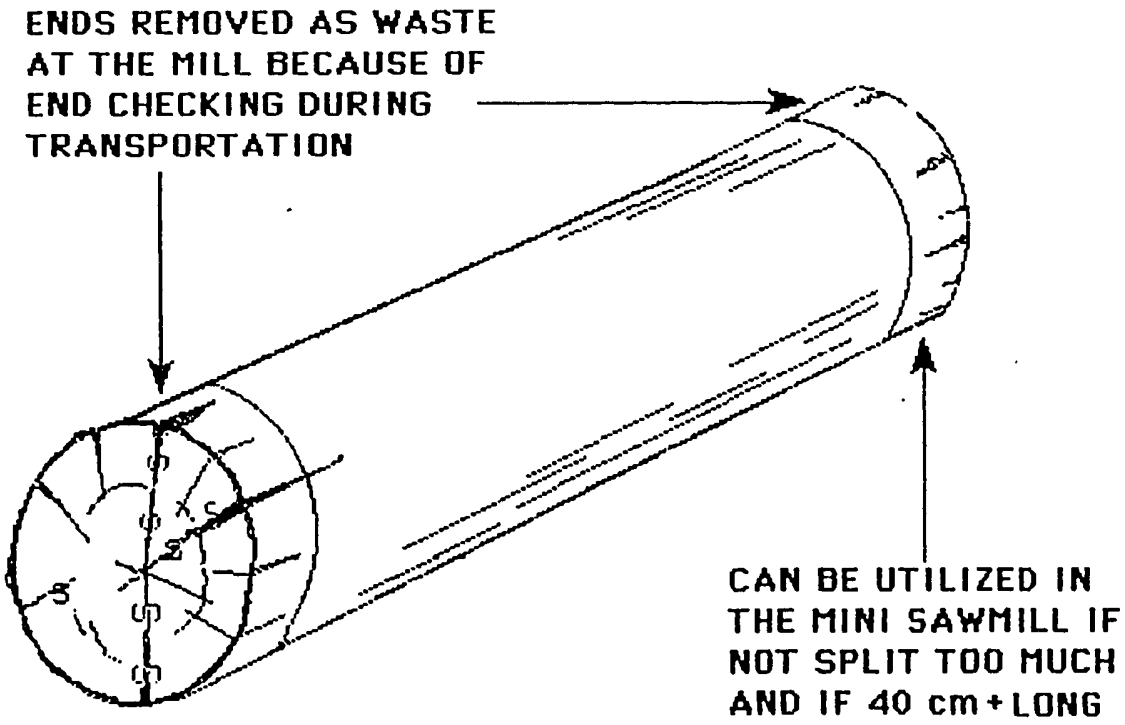

STUDY PROPOSAL No. 2

STUDY

Name:

Quantification of Commercial Wood Loss Due to Current Road Construction Practices.

OBJECTIVE

Purpose:

To quantify the amount of commercial wood which is being lost due to present road construction practices.

Benefit:

An increase in the volume/hectare recovery means a decrease in the per unit volume road construction and road maintenance costs.

Improved recovery of commercial wood means an improved supply of wood for the industrial complex.

Implications:

Alternative technical solutions will have to be adopted in the road construction activity. Improved right-of-way log recovery procedures will have to be adopted.

The possibilities of increasing the AAC or of extending the 35 year cutting cycle should be activity pursued if a significant potential for improved recovery can be demonstrated. This may require a change in the policy governing the calculation of AAC.

RATIONALE

It has been repeatedly observed that current road construction practices consume much of the right-of-way log volume. It is understood that company policy calls for the recovery of this volume whenever possible, however, field observations indicate that much room for improvement exists.

The waste of valuable right-of-way logs is occurring in three ways:

1. As road bed stabilization material.

2. In present bridge construction practices which use excessive amounts of logs.

3. In the failure to remove all right-of-way logs from the road side at the time of construction. When logging activities begin one year after construction, these logs have deteriorated and no longer have a commercial value.

These observations have been noted in past study tours, most notably by the US Forest Service study team on road construction in August,1993, and also by the Consultant during his visit to the road network into the 1993/94 proposed logging area.

A quantification of the volume lost to PT.SBK's industrial plant will help to focus the attention of management on the need and advantageous of maximizing the recovery of right-of-way logs.

IMPLEMENTATION

Study Design:

The study will involve the sampling of a predetermined percentage of the road distance on the roads built for the 1993/94 logging area. The total area is approximately 5,000 hectares having a total road distance of approximately 110 km. 1:10,000 road system maps will be used to chose a representative sample of main and branch road segments to be sampled up to the target sampling intensity (suggested to be approximately 10%).

Methodology:

Mutually agreeable criteria defining "avoidable" loss will be established at the beginning of the study.

Avoidable loss will be measured and recorded by waste category as identified above. Two crews will conduct the field measurements on the predetermined road sections totalling approximately 11 kilometers (10% of the 1993/94 road system).

Data will be compiled as per existing volume estimating procedures.

Manpower requirements (SBK & NRMP):

Two measurement crews will be used to cover the road sections chosen for the study. Each crew will be headed by a technical person from PT.SBK and NRMP and will require a maximum of two labours.

NRMP - Consultant plus two technical support staff.

SBK - Two technical counterparts plus 4 laborers.

Material requirements:

Measuring tapes, note books, pocket calculators, volume tables.

Activity Schedule:

No.	Activity	Days	Location
1.	Definition of avoidable waste	3	Pontianak
2.	Choice of study area	1	km 35 office
3.	Field trip	1	study area
4.	Implementation	6	study area
5.	Data Compilation	5	km 54 camp
6.	Presentation	1	Pontianak

Total time required to complete the study (including travel) is estimated at three and a half weeks.

EXPECTED OUTPUT

1. A brief, illustrated report outlining the objective, rationale, methodology and results with recommendations for alternative approaches to road construction practices which result in the current level of waste.

2. A volume estimate of the avoidable wood losses due to current road construction practices. This can be expressed as a potential increase in the recovery volume per hectare.

STUDY PROPOSAL No. 3

STUDY

Name: **Comparison of Sampling Intensities**

OBJECTIVE

Purpose:

A study intended to compare the volume estimates arrived at from the 5%, 25% and 100% sampling intensity.

Benefit:

Provide a factual basis for further examination of the statistical need to conduct the 100% cruising in it's present form.

Test the reliability (quality of the data presently being collected in the 5% versus the 100% inventory.

Implications:

Provide a factual basis for the assessment of the present guidelines governing cruising activities.

If there is an inadequate correlation of the data between the 5% and the 100% cruise for the same sample strips, a need to field check the actual field measurements and procedures would be indicated.

RATIONALE

The 100% inventory is very central to the TPTI system. Much doubt has been expressed about the technical need for a 100% sampling and a widespread consensus in the industry concurs with this doubt.

The requirement of a 100% inventory places the emphasis on "quantity" rather than "quality" of data collected. An investigation will be made using the 5% and 100% data recorded for the identical areas to compare the results as a potential measure of the consistency and quality of the data.

IMPLEMENTATION

Methodology:

Agree on matters concerning the purpose and implementation of the study.

Select appropriate petaks on which to conduct the data analysis.

Collect data at Km. 35 office of PT.SBK and analyze data at the NRMP office at Km. 54 camp.

Schedule of activities

No.	Activity	Days	Location
1.	Agree on implementation	2	Pontianak
2.	Select study area	1	Km 35 office
3.	Data collection	3	Km 35 office
4.	Data analysis	5	Km 54 camp
5.	Preparation of report	2	Km 54 camp
6.	Presentation	1	Pontianak

Total implementation should be completed within two and a half weeks.

Manpower requirements: (SBK & NRMP)

SBK - Assistance with data retrieval at the Km 35 office.

NRMP - Consultant plus a technical assistant.

Material requirements:

To be supplied by NRMP

EXPECTED OUTPUT

Objective data to assist in the evaluation of the need for the present requirement of 100% prelogging inventory.

Policy guidelines regarding the need and application for the 100% cruising requirement.

A factual basis for the need to examine the emphasis on "quality" rather than "quantity" in the collection of cruising data.

STUDY PROPOSAL No. 4

STUDY

Name:

Development and Field Testing of a Diagnostic Silvicultural Survey Procedure

OBJECTIVE

Purpose:

Develop a diagnostic silvicultural sampling procedure designed to assess the residual stand and to produce more useful data than is now being collected. Procedure to include measurement and qualitative assessment of the nucleus trees 20cm+. The procedure will also require the sampling of pole, sapling, and seedling stages and will assess the need for further silvicultural action.

Benefit:

Demonstrate that improvements in the quality, precision, and quantity of information gathered about the residual stand can be achieved with less effort and at less cost than the present post harvesting assessment procedure.

Develop a procedure to allow for a more realistic assessment of the potential of the residual stand for future cutting cycles as well as a quantifiable assessment of the damage caused by the logging.

Provide a more realistic basis for assessing the need for specific silvicultural intervention.

Develop an effective diagnostic tool to permit external assessment of the performance of concessionaires in complying with Ministry of Forestry guidelines.

Implications:

Establish a basis for a more factual assessment of the technical necessity and appropriateness of the existing TPTI guideline concerning post harvest assessment with the intention of improving the guideline.

RATIONALE

The purpose of the existing 100% post harvest assessment is stated as:

* determining the stocking of nucleus trees (pohon inti),
* determining the stocking of poles and saplings,
* assessing the damage to pohon inti and protected trees, and,
* determine enrichment planting needs.

The existing procedure involves a hierarchical, nested sampling requiring minimum stocking levels of 1 or 2 pohon inti, or, 1 pole size tree, or 1 sapling of commercial species in decreasing plot sizes. There is no attempt to generate a qualitative description of the residual stand based on total species stocking nor of the potential of the residual trees to form future crop trees. The procedure does not provide a means of documenting damage to the residual stand. Trees damaged beyond a certain tolerable limit are simply not to be tallied.

The procedure does not take into account the actual stocking of poles or saplings or the presence of commercial seedlings.

The existing procedure does not provide an accurate measure of site disturbance or of permanently non productive sites.

The existing procedure provides very little basis for extrapolating the development of the stand to the next cutting cycle nor does it form the basis for any meaningful decision making. Assessment of planting needs on disturbed site can be determined much more effectively by direct measurement of skid trails and disturbed areas.

A sampling procedure will be developed which will:

* Assume acceptable quality and species criteria for future crop trees in the different size categories,
* Assume target stocking levels for the different size classes,
* Record diameter and bole height of all residual trees over 20 cm dbh.,
* Provide a qualitative assessment of each tree sampled over 20 cm dbh,
* Record all pole size and sapling trees of acceptable quality and species within a subplot,
* Record seedlings of acceptable species and quality within a smaller subplot if minimum stocking in the larger size categories are not satisfied,

* Record the percentage of nonproductive area and disturbed area in the main plot,
* Assess planting requirements if stocking standards are not satisfied,
* Assess the need for further silvicultural activity such as weeding or liberation,
* Provide the basis for the preparation of forest type maps according to the intensity of logging.

IMPLEMENTATION

Methodology:

Implementation of this study proposal is expected to occupy most of the 2.5 month consultancy. Development of the standards, criteria, and sampling methodology will involve the appropriate personnel in the Ministry of Forestry in Jakarta and appropriate research agencies.

A sampling intensity of 20% is proposed. This is subject to change during the formulation period.

Field testing of the procedure is expected to involve both the staff of the NRMP and PT.SBK.

Manpower requirements: (SBK & NRMP)

NRMP - Consultant plus two technicians for the field sampling.

PT.SBK - Two technicians and 4 laborers for the field sampling.

Material requirements

Measuring tapes, diameter tapes, note books.

Schedule of activities

No.	Activity	Weeks	Location
1.	Development of sampling criteria and sampling methodology.	2	Jakarta
2.	Preparation for implementation	0.5	Pontianak
3.	Logistical arrangements	0.5	Km 35 office
4.	Selection of study area	0.5	Km 35 office
5.	Field sampling	4	Field location
6.	Data analysis	1	Km 54 camp
7.	Preparation of report	1	Jakarta
8.	Presentation of final report	0.5	Jakarta

Total implementation should be completed within the 2.5 month consultancy period.

EXPECTED OUTPUT

Final report providing:

* A description of sampling criteria and methodology.
* An analysis of the results and a synthesis of the applicability of the procedure for wider application.
* Recommendations regarding adjustments to the criteria and sampling procedure and intensity.
* Estimates of time, cost, and practical implications of adopting the silvicultural sampling procedure in place of the present requirement.
* An evaluation of the appropriateness of the procedure for assessing the status of the residual stand and for guiding decision making for further silvicultural treatments.
* An assessment of policy implications concerning the wider adoptions of such a procedure.

STUDY PROPOSAL No. 5

STUDY

Name: **Low Impact Logging: Planning and Implementation**

OBJECTIVE

Purpose:

Using existing information and capabilities, it is intended to demonstrate the potential for reducing the environmental impact of the logging activities and improve the cost effectiveness of the log extraction process.

The first phase of this study will involve planning of extraction trails using the 1:1000 contour maps, skid trail construction, extraction and monitoring, and analysis of the results.

The second phase of the study will require a longer time frame and will involve additional Technical Assistance and the lease or purchase of a rubber tired skidder.

Implementation details will be provided here only for the first phase of the study.

Benefit:

The intended benefits are to reduce the environmental impact to the soil and residual stand and to make the skidding activity more efficient, hence more cost effective.

Implications:

A successful demonstration of the first phase could lead to the second phase with trials of different felling techniques and different skidding equipment.

RATIONALE

The logging activities of felling and skidding have by far the biggest impact on the soils and the residual stand and, therefore, on the suitability of the stand to provide a reliable basis for the second cutting cycle. The need to examine technical alternatives to existing practices has been widely acknowledged if sustainable forest management is to be assured.

Studies in other countries with tropical forests and ongoing studies in Indonesia, give strong indication that damage reduction up to 25% can be achieved on an operational scale. Improvements in extraction efficiency and cost savings have also been demonstrated.

PT.SBK carries out the necessary field activities and has the necessary technical staff to make successful implementation of operational trials into technical improvements to the logging planning and skidding activities possible.

IMPLEMENTATION:

PHASE 1 - Logging Planning, Engineering and Controlled Extraction.

Methodology:

Existing information and capabilities will be employed to demonstrate the potential for lowering both the impact of the extraction and the extraction cost through improved planning and preparation for the logging.

A study area of approximately 20 ha will be chosen with a control area of similar size nearby. Basis for choosing the study area will be clearly recognizable topographic logging limits such as creeks or ravines. The study area must be covered by the 1:1000 contour maps which are produced during the 100% cruising and must represent typical terrain conditions.

All major skid trails will be planned on the contour maps using topography and stocking of commercial species as primary location criteria. Major skid trails will then be located in the field, traversed, and plotted on the contour maps.

Skid trails will be constructed by bulldozer prior to the commencement of felling activities. Time/cost of skid trail construction will be recorded.

Systematic felling and extraction will be carried out and productivity will be monitored. Extraction will be controlled to utilize preconstructed trails as much as possible.

Upon completion of the extraction, water bars will be established across steep skid trails as necessary to minimize run-off erosion.

A sampling procedure will be developed and implemented to determine percent site disturbance and damage to the residual stand. Both the study area and the unregulated control area will be sampled for comparison.

Manpower requirements: (SBK & NRMP)

PT.SBK - The ideal situation would be to have two technical staff to work jointly in choosing the study area, plan the skid trail location, and locating and traversing the skid trails. During the field layout and post logging sampling, four laborers would also be required. Bulldozer operator plus helper during the skid trail construction; normal logging crew for felling and extraction

NRMP - Consultant plus one or two technical assistants.

Material requirements:
Compass, clinometer, measuring tape, notebooks. Bulldozer for skid trail construction plus normal logging operation.

Schedule of activities

No.	Activity	Weeks	Location
1.	Project liaison	0.5	Pontianak
2.	Logistical arrangements	0.5	Km 35 office
3.	Selection and demarcation of study area	1	Field location
4.	Planning of study and paper location of skid trails	0.5	Km 35 office
5.	Field location of skid trails	1	Field location
6.	Logging and monitoring	2-4	Field location
7.	Development of impact sampling methodology	0.5	Km 35 office
8.	Field sampling	1.5	Field location
9.	Analysis of impact assessment	1	Km 54 camp
10.	Preparation of final report	1	Jakarta
11.	Presentation of final report	0.5	Jakarta/ Pontianak

Total implementation should be completed within the 2.5 month consultancy period.

EXPECTED OUTPUT

An illustrated report giving:

* A description of objectives and methodology of implementation,
* An analysis of the results of the trial including an assessment of cost and a comparison with normal production,
* An analysis of the sampling of logging impact,
* Conclusions and recommendations
* A detailed proposal for the second phase in low impact logging will be developed as an output in the final report of the first phase.

Phase Two - Trials in Low Impact Extraction

Using combinations of tracked and rubber tired skidding equipment as well as different felling techniques, the study will test the feasibility of achieving a reduced impact over conventional skidding using D-7 bulldozers. A control area will be set up for comparative studies

STUDY PROPOSAL No. 6

STUDY

Name:
Construction of Simple Box Culverts

OBJECTIVE

Purpose:
To establish a technique for the installation of simple box culverts using existing equipment.

To monitor cost of actual installation

Benefit:
To improve overall road construction standards.

To reduce erosion problems due to seasonal flooding caused by lack of cross drains on the road system.

To avoid productive forest site loss by eliminating the excessive ponding of water caused by present road construction practices.

Implications:
Reduce environmental criticisms with regard to impeding natural drainage patterns.

It is recognized that a slight increase in road construction costs may result from general acceptance of this activity.

RATIONALE

Due to the very broken nature of the topography in the PT.SBK concession, deeply gullied seasonal and permanent water courses are frequently crossed by the road construction. Current practices either ignore the issue of providing cross drainage or result either in the piling of logs at the bottom of the gully or the installation of a hollow log in the upper portion of the fill.

These attempts to provide cross drainage have a very high failure rate as can be seen by the frequent ponding of water upstream of the road fill. This leads to a permanent loss of growing site as well as providing a potential for overflow during peak run-off periods and the resulting erosion or the road surface and softening of the subgrade.

IMPLEMENTATION

Methodology

Prepare sketches of box culvert.

Chose a section of road under construction as a study area and make logistical arrangements.

Construct at least two box culverts. Time and costs will be recorded.

Prepare brief report detailing results including photographs of the procedure used for construction.

Schedule of activities

No.	Activity	Days	Location
1.	Preparation and discussion	1	km 35 office
2.	Choice of study area	1	field
3.	Logistical arrangements	2	study area
4.	Construction of 2 culverts (min)	5	study area
5.	Preparation of report	2	Jakarta
6.	Presentation	1	Pontianak

Total implementation should be completed within a three week period.

Manpower requirements: (SBK & NRMP)

NRMP: Consultant plus one technical staff.

SBK: Machine operator and chockerman, chainsaw operator plus helper, 2 laborers.

Material requirements:

Bulldozer with winch, chainsaw, sledge hammer and wedges, axes.

EXPECTED OUTPUT

Demonstration of technical alternatives to the present practice.

Qualification of the potential costs involved in adopting this activity as a general practice in the construction of forest roads.

A final report complete with illustrations.

STUDY PROPOSAL No. 7

STUDY

Name:

A Comparative Study Between 100% Cruising Data and 100% Post Harvest Assessment Data

OBJECTIVE

Purpose:

To compare the 100% cruising data with the 100% post harvest assessment data in an attempt to assess the impact of the logging activity.

To test the utility of the 100% post harvest assessment activity as an effective basis for further decision making and as a basis for assessing the quality of the logging activity.

To test the reliability of the 100% post harvesting data collection as a means of providing meaningful information about the potential of the future crop and about the need for further silvicultural intervention. This will be achieved by applying a 10% field check on the initial data.

Benefit:

The study will provide some factual data which can be used to further the argument for or against these activities and, if necessary, indicate the need for changes to the activities in the interest of a more efficient and useful procedure.

Implications:

This comparative study should indicate whether there is a good or a poor correlation between tree measurements/estimates and thereby determine whether an actual field check on the initial field activities would be beneficial.

Data collected in this study could provide a useful input into policy decisions affecting these activities in the TPTI system.

RATIONALE

In theory, a major purpose of the requirement for the 100% post harvest assessment in the TPTI system, is to provide a mechanism for assessing and monitoring the logging activity and for assessing the marking and tree mapping carried out in the 100% cruising.
There is, however, almost no evidence that such comparisons have or can be done on a operational basis.

It has been observed that the 100% post harvest assessment achieves very little in terms of guiding future management decisions and in assessing the performance and impact of the logging activity. This study, therefore, seeks to determine whether the assumptions underlying the requirement for the 100% post harvest assessment are technically valid.

Field observations suggest that data collected may have marginal value in terms of accuracy and completeness in guiding decision making concerning the future of the stand and the need for further silvicultural intervention.

IMPLEMENTATION

Methodology:

At least one petak will be chosen as a case studies. A prerequisite will be that 100% cruise and 100% post harvesting data and maps are available for the petaks.

A comparative study will be made of as many parameters as possible to determine the relationship between the two data sets and the usefulness of the post harvest assessment data in providing meaningful information for further silvicultural decision making.

A 10% check cruise of the post harvesting data will be carried out in the field to determine the reliability of the data collected and to assess the usefulness of the data. The check cruise will use actual measurements and will record all information as suggested in Study No. 4.

Manpower requirements: (SBK & NRMP)

PT.SBK - One technicians and one laborer for the check cruising; general office support for data retrieval.

NRMP - Consultant plus one technician.

Material requirements:

Compass, measuring tape, diameter tape, clinometer, note books and petak maps and record books.

Schedule of activities:

No.	Activity	Days	Location
1.	Agree on implementation	1	Pontianak
2.	Set check cruise parameters	4	Pontianak
2.	Select study area	1	Km 35 office
3.	Visit to study area	1	Field location
4.	Carry out check cruise	5	Study area
5.	Analysis of data	4	Km 54 camp
6.	Preparation of report	4	Km 54 camp
7.	Presentation	1	Pontianak

Total implementation should be completed within four weeks.

EXPECTED OUTPUT

Objective data on the accuracy of the data gathered during the initial post harvest assessment.

A factual measure of the usefulness of the 100% post harvest sampling for purposes of assessing the quality of the logging through comparison with the initial 100% cruise data, for assessing damage to the residual stand, and for guiding decision making for further silvicultural intervention.

A report detailing objectives, methodology, and results of the study.

APPENDIX 1: TERMS OF REFERENCE NATURAL PRODUCTION FOREST MANAGEMENT CONSULTANT

Terms of Reference
NATURAL PRODUCTION FOREST MANAGEMENT CONSULTANT

BACKGROUND

Under the USAID-assisted Natural Resources Management (NRM) project, the Ministry of Forestry is testing policies and practices to improve the management of natural production forests. To do this a team of advisors has been assigned to work in the Ministry of Forestry, and in the Bukit Baka-Bukit Raya National Park. This includes a Forestry Advisor in Jakarta working in MoFr, and a Forestry Research Advisor/Team Leader, a Agroforestry Advisor, a Nature Conservation Advisor and a Social Forestry Extension Advisor working in Bukit Baka. However as the project moves toward with the implementation of field activities there is an urgent need to strengthen the present field team with additional assistance in the area of natural production forest management.

This terms of reference is for two consultants, one with expertise in planning and the second with experience implementing natural production forest management efforts. The planning specialist will primarily examine the current plans and make recommendations for improvements; the implementation specialist will examine how forest utilization plans are currently implemented in the field and make recommendations on improving these practices. The two consultants will overlap and coordinate their work to ensure complementarity of efforts. An illustrative schedule for their activities is attached to this TOR.

FOREST MANAGEMENT PLANNING SPECIALIST

I. TASKS

1. Based on field inputs, review and provide recommendations to improve the following three forest utilization plans:

   a. The RKPH (Rencana Karya Pengusahaan Hutan), long-term planning for forest utilization working with the Kanwil and the Dinas in West Kalimantan and the concessionaire (PT SBK). The consultant will:

      i. review the existing guidelines for formulating an indicative plan for a long-term forest utilization (RKPH);

      ii. review how the plan can be revised to more realistically reflect general forest information in different concession areas;

      iii. identify procedures to collect general information on economic projections of the concession's forest products as well as identify the potential harvest for non timber forest products;

BEST AVAILABLE COPY

iv. provide guidance for planning forest fire mitigation programs;

v. identify what procedures should be used by the Ministry of Forestry to more easily review the plan; and

vi. prepare options for improving the guidelines in formulating a long-term plan if the existing plan requires improvement.

b. The RKL (Rencana Karya Lima Tahun = Five Year Operational Plan). The advisor will review the MoFr guidance for the plan, including: identification of the plan's strength and weaknesses relative to field implementation; degree of accuracy in implementation of the plan, how to monitor progress indicating what benchmarks should be used, volume counting system of harvested logs and recommendations for improvement of these plans to enable MoFr to conduct better performance evaluations of the concession holder. He will ensure that the plan provides clear direction to subsequent logging operational plans of the concessionaire.

c. The RKT (Rencana Karya Tahunan = Annual Logging Plan). The advisor will review the existing guidelines for formulating the RKT, and provide technical recommendations for improvements.

2. The advisor will work closely with NRMP advisors and GOI officials, and coordinate work plans, approach, and outputs with the Natural Production Forest Management Implementation consultant.

II. OUTPUTS

1. A mid-term report to be completed roughly halfway through the consultancy on work completed and changes needed in the RKPH, RKL and RKT submitted through the NRMP COP to MoFr and USAID.

2. Completed field visits to PT SBK to check the RKPH, RKL and RKT in the field.

3. Brief monthly reports on work carried out to the NRM Chief of Party, the Kanwil in West Kalimantan and the NRM PIU in the Directorate General of Forest Utilization.

4. A final report submitted to GOI and USAID by the end of the consultancy detailing findings and recommendations as outlined under Tasks above.

5. Presentations to USAID and relevant GOI officials before the submission of the mid-term and final reports.

BEST AVAILABLE COPY

III. REPORTING

The consultant will report to the NRMP Chief of Party working closely with the MoFr (Kanwil and Dinas) in Pontianak and Palangkaraya. Also with the NRM/ARD Forestry Advisor (MoFr), the NRM/ARD Team Leader/Forestry Research Advisor and the NRM/ARD Agroforestry Advisor in Pontianak and Bukit Baka. He will also liaise closely with the NRM Project Implementation Unit in the Directorate General of Forest Utilization (MoFr).

IV. LOCATION

Jakarta with frequent travel to Pontianak and Bukit Baka as well as other areas as required.

V. DURATION

Six months devided into two separate consultancies of approximately three months each.

VI. QUALIFICATIONS

1. A masters or preferably PhD degree in Forestry.
2. Ten to fifteen years experience working on forestry management issues in Indonesia and/or Southeast Asia.
3. Good spoken and written English and Indonesian.

FOREST MANAGEMENT IMPLEMENTATION SPECIALIST

I. TASKS

1. Assess the implementation by PT SBK of the plans (RKPH, RKL and RKT). Guidelines for better implementation should be prepared where necessary and training provided to SBK staff (see No. 3 below).

2. Based on field work being carried out by PT SBK, provide technical recommendations on how to improve the present silviculture, cutting, and harvesting methods of the TPTI system. Also make recommendations on the feasibility of implementing the newly developed TJTK system (Tebang Jalur Tanam Konservasi = Strip Logging and Conservation).

BEST AVAILABLE COPY

3. Provide training where necessary for SBK staff to help improve the implementation of the RKPH, RKL, and RKT plans.

4. Coordinate efforts with the short-term Planning Specialist and assist the NRM/ARD long-term Agroforestry advisor working on the natural production forest management aspect of the NRM project in the PT SBK concession area.

II. OUTPUTS

1. Completed field visits to PT SBK with recommendations on implementation practices and areas of improvement by the SBK staff.

2. Recommendations based on field work on improvements needed in logging, silviculture and cutting practices as well as on the general TPTI system.

3. A mid-term report to be completed and submitted to GOI and USAID at the end of the first consultancy detailing work completed to date and preliminary implementation recommendations as in Nos. 1 and 2 above.

4. A brief monthly reports on work carried out submitted to the NRM Chief of Party, the Kanwil in West Kalimantan and the NRM PIU in the Directorate General of Forest Utilization.

5. A final report submitted to GOI and USAID by the end of the consultancy detailing findings and recommendations.

6. Presentation to USAID and relevant GOI officials before the submission of the mid-term and final reports.

III. REPORTING

The consultant will report to the NRMP Chief of Party working closely with MoFr (Kanwil and Dinas) in Pontianak and Palangkaraya. Also with the NRM/ARD Forestry Advisor (MoFr), the NRM/ARD Team Leader/Forestry Research Advisor and the NRM/ARD Agroforestry Advisor in in Pontianak and Bukit Baka. He will liaise closely with the Project Implementation Unit in the Directorate General of Forest Utilization (MoFr).

IV. LOCATION

Pontianak with frequent travel to Bukit Baka, and Jakarta as well as other areas as required.

BEST AVAILABLE COPY

V. DURATION

Five months divided into two separate consultancies of approximately 2.5 months each.

VI. QUALIFICATIONS

1. A masters or preferably PhD degree in Forestry.
2. Ten to fifteen years experience working on forestry management issues in Indonesia and/or Southeast Asia.
3. Good spoken and written English and Indonesian.

BEST AVAILABLE COPY

APPENDIX II: SELECTED REFERENCES
NATIONAL RESOURCE MANAGEMENT PROJECT

1. **Proceedings of the Fourth Round-Table Conference on Dipterocarps**, Bogor, Indonesia, 12-15 Dec. 1989. Biotrop Special Publication No. 41, Published by Southeast Asian Regional Centre for Tropical Biology (SEAMEO BIOTROP) P.O. Box 17, Bogor, Indonesia, 1991, 576 pp.

2. **Applied Research Recommendations for Production Forest Management:** An economic and Ecological Review of the Indonesian Selective Cutting and Replanting System (TPTI), May 1992, Lisa M. Curran and Monica Kusneti, Natural Resources Management Project, Report No.4, USAID - Jakarta, 291 pp.

3. **Cruiser Identifications at SBK and Local Uses of Trees by Local People**, December 1992, Jim Jarvie, Natural Resources Management Project, Report No. 11, USAID - Jakarta, 33 pp.

4. **Recommendations for Controlled Timber Harvesting in the SBK Forest Concession**, August 1992, John Hendrison, Natural Resources Management Project, USAID - Jakarta, 48 pp.

5. **Forest Management for Sustainable Production and Conservation in Indonesia**, October 1992, Ian Armitage and Muhammad Kuswanda, DG of Forest Utilization, MoF, GOI and FAO Field Document No.I-2

6. **Tropical Rain Forests of Indonesia:** An Analysis of Current Harvesting Practices with Recommendations for Improvement to Achieve Sustained Yield and Conservation of Biodiversity, Sept. 1992, P.F. Burgess, a report prepared for the Centre Technique Forestier Tropical Nogent-sur-Marne, France. Burgess, ABW Associates Ltd., Jeffreys Building, St. Johns Innovation Park, Cowley Road, Cambridge CB4 4WS England.

7. **Damage Controlled Logging in Managed Tropical Rain Forest in Suriname**, December 1990, J. Hendrison, Agricultural University, Wageningen, PUDOC, P.O. Box 4, 6700 AA, Wageningen, The Netherlands.

8. **Action Plan for Forestry Sector Development in Indonesia**, March 1991, Dir. Gen. of For. Util., Ministry of Forestry, Jakarta, Indonesia.

9. **Design and Construction of Forest Roads**, Trip Report, USDA Forest Service Visit to Indonesia, Aug. 31-Sept. 13, 1993

10. **ITTO Guidelines for the Sustainable Management of Natural Tropical Forests**, May 1990, Permanent Committee on Reforestation and Forest Management, 19 pp.

11. **Some Information About Alas Kusuma Group Regarding to USDA's Forest Service Engineering Team Visit to Indonesia**, Sept. 1993, Alas Kusuma Group, Pontianak.

12. **Harvesting and Transportation of Timber in Indonesia**, Oct. 1989, Angelo G. Mordeno and Djaban Tinambunan, FAO, Field Document No. I-4.

13. **Status and Potential of Non-Timber Products in the Sustainable Development of Tropical Forests**, Proceedings of the International Seminar, 17 Nov. 1990, ITTO

14. **Forest Concessions in Indonesia: Institutional Aspects**, July 198), John A. Gray and Soetrisno Hadi, FAO Field Document No. VI-1

15. **Directional Felling**, 7 January 1993, M. Sudijono, Letter to the Editor in Tropical Forest Management Update, ITTO, Vol. 3, No. 1.

16. **Concession Management and Inspection Services Project**, 1993, Reid, Collins and Associates with Pt.Citra Teknik Nasional Sejati, for the, Ministry of Forestry, Directorate of Forest Utilization.
    - Vol. 1 Executive Summary
    - Vol. 2 Main Report
    - Vol. 3 Systems Design Support Documents, Vol. 1 of 2
    - Vol. 4 Systems Design Support Documents, Vol. 2 of 2

17. **Indonesia Forestry Action Programme**, Nov. 1991, Ministry of Forestry, Rep. of Indonesia.
    - Vol. 1 Executive Summary
    - Vol. 2 Country Brief
    - Vol. 3 A Portfolio of Profiles of Technical Assistance and Investment Projects

18. **Alternatives to Deforestation:** Steps Toward Sustainable Use of the Amazon Rain Forest, date ?, edited by Anthony B. Anderson, Columbia University Press, New York

19. **Rencana Karya Pengusahaan Hutan Yang Meliputi Jagka Waktu Pengusahan** (Sementara), PT. Sari Bumi Kusuma, Periode: 1993/94 - 2014/15

20. **Guidelines for Evaluating Logging Operations in Indonesia's Natural Forests**, Rainforest Alliance, Revised Draft - Aug. 1991

21. **Review of Forest Management Systems of Tropical Asia**, FAO Forestry Paper 89,(Case studies of natural forest management for timber porduction in India, Malaysia, and the Philippines), 1989, FAO, Rome

22. **Situation and Outlook of the Forestry Sector in Indonesia** UTF/INS/065/INS: Forestry Studies, Technical Report No. 1, 1990 D.G. of Forest Utilization, MoF, Gov't. of Indonesia/FAO
    Vol. 1 Issues, Findings, and Opportunities
    Vol. 2 Forest Resource Base
    Vol. 3 Forest Resource Utilization
    Vol. 4 Social, Environmental, and Institutional Aspects

23. **Natural Management of Tropical Moist Forests: Silvicultural and Management Prospects of Sustained Utilization** edited by Mergen, Francois, and Jeffrey R. Vincent, 1987 Yale University, School of Forestry and Environmental Studies New Haven, CT 06511,

24. **Management Systems of Natural Forests in Indonesia** ITTO/JOFCA - PT AJI Buana Asri, 1992

25. **The Forest Management Practices of P.T. Kayu Lapis Indonesia;** a report by The Tropical Forest Conservation Programme of the International Union for Conservation of Nature and Natural Resources to, The ADB and the MoF, Government of Indonesia; Peter F. Burgess and Dominique Laurent, Feb. 1989

26. **Log Bridge Construction Handbook**, 1980, M.M. Nagy, J.T. Trebett, G.V. Wellburn, published by the Forest Engineering Research Institute of Canada, 201-2112 West Broadway,Vancouver, B.C., Canada, V6K 2C8

27. **Manual For Roads and Transportation**, Volume I, 1976, D.C. Holmes, D.A. Vink, and "Volume II", 1984, D.C. Holmes published by the British Columbia Institute of Technology, 3700 Willingdon Avenue, Burnaby, B.C., Canada, V5G 3H2

APPENDIX 3: MILL TOUR
P.T. SBK
October 19, 1993
Pontianak

OBJECTIVE

The objective of this tour was to assess the mill's capacity to utilize varying qualities of raw material inputs as a backdrop to analyzing the utilization standards in use by PT. SBK's forest operations.

BACKGROUND

During the first field visit to the PT.SBK concession, it was noted that log quality being delivered to the log pond was very good. A field visit to the active logging area resulted in the observation that a significant portion of the main bole volume of many trees was being left in the forest. This utilization waste was clearly caused by company policy as reflected in the bucking standards which were being administered at the field supervisor level.

It was not clear whether the current utilization standard was set by constraints on raw material input as dictated by the breakdown machinery of PT. SBK's industrial complex. The decision to request a mill tour was therefore made in order to seek clarification within the context of possible industrial constraints on forest utilization.

ACKNOWLEDGEMENTS

The mill tour was organized courtesy of Pak Mamat Mulyan. The Consultant was escorted to the mill site by Pak Sunyoto from the Pontianak office of PT.SBK. At the mill site, the Consultant was met by Pak Latif Kuswanto, general manager, who very graciously answered the many introductory questions. An excellent tour of the industrial complex was provided by Pak Yosep Ryadi, industrial works manager.

OBSERVATIONS

The following observations relate primarily to the raw material supply and utilization at the mill. The main focus was to see the quality of the raw material reaching the mill and to assess the flexibility of the mill in being able to utilize raw material of varying quality and size.

Raw Material Demand

The industrial complex consists of a plywood factory and a sawmill and moulding mill. Log requirements were given as:

Plywood mill	25,000 cu.m./month
Sawmill	2 - 3,000 cu.m./month
Total log input	28,000 cu. m./month

Raw Material Supply

All logs are received by river transport. Most logs are foaters and are transported as flat rafts. A relatively minor percentage of sinkers are transported on barges. Sinker logs are stockpiled at the rivers edge.

Approximately 80% of the logs originate from the HPH of PT.SBK (made up of 60% from the Kalteng Block in Central Khalimantan and 20% from the Kelbar Block in West Khalimantan). The remaining 20% of the log supply comes from the Bulin HPH belonging to a sister company in the Alis Kusuma Group.

Transportation from PT.SBK's log pond at Popoi takes approximately two weeks to Sintang where logs are reboomed into larger rafts. Transport time from Sintang to the mill in Pontianak takes another two weeks.

Logs received by the industrial complex are generally of consistently high quality. Payment of logs is handled as an internal transfer price based on a historic average quality but does not necessarily reflect true log value.

Log Processing at the Mill Site

Sinker logs are bucked to final length according in input requirements on the log yard at the river side. Logs are transported to the input machine by front end loader. This is a relatively inefficient process and results in waste (end cut) accumulation on the log yard. Fortunately sinker volume is not large as a percentage of total log consumption.

The majority of logs are floated along an excavated canal to a crane where they are placed on a conveyor and cut to the required lengths by a log breakdown saw. Distribution to the different lathes in the plywood mill is via an internal log pond accessed by overhead cranes. Short lengths and lower quality wood is channeled to the sawmill.

Plywood Mill

The plywood mill consists of two separately owned production lines under one roof. Raw material input and final product output is differentiated by size.

PT.SBK	3 Lathes	one 4' and two 8'
	Products:	1.65, 2.4, 5.2, 11.5, and 14.9 mm plywood
PT.HTL	3 Lathes	one 5' and two 9'
	Products:	2.7, 3.0, 3.6, and 18.0 mm plywood

Log inputs are recorded separately for each mill. It is assumed that this is primarily to monitor manufacturing recovery.

The lathes have a diameter limitation of 170 cm. An unknown percentage of the log volume is in excess of this diameter and is directed to the sawmill for conversion to lumber as input to the moulding plant.

Sawmill

A moderate size sawmill utilizes species unsuitable for plywood production, lower quality logs, and oversize (greater than 170 cm) logs.

The sawmill breakdown line consists of:

- one 60" band saw as the primary breakdown machine feeding,
- two 48" secondary breakdown band saws feeding,
- four 42" tertiary band resaws with accompanying edgers.

Down-stream processing consists of kilns and a variety of moulders.

Mini Sawmill

An integrated mini sawmill handles peeler cores, short logs, and end cuts to a minimum length of 40 cm. A special short log carriage makes use of the high quality end cuts which have become severely checked during transportation and are consequently unsuitable as inputs to the lathes.

The mini sawmill also produces dimension lumber for the moulding plant. Short wood production is destined primarily for window and door manufacture. Lower quality sawn output from the peeler cores is used as packing and shipping material.

Secondary Products and Waste

Second quality output from both sawmill lines is shipped to another factory for conversion into blockboard. Large sized waste is bundled and shipped to a sister company for conversion into particle board. Waste wood, veneer trimmings, and other mill waste is fed to the boilers for conversion into steam energy needed in the dryers.

OVERVIEW

Approximately 95% of the total industrial production is exported. The remaining 5% is sold domestically.

This mill is approximately 12 years old and appears to have been well amortized. Some obvious inefficiencies exist at the raw material end, however, the industrial complex is well equiped to handle a variety of piece sizes and quality standards.

The industrial complex has good flexibility to handle logs with defects such as holes and irregular form. ***There does not appear to be any mill determined constraint to better utilization of the raw material in the forest.*** Further investigations will have to be made to determine if there are any economic or logistical reasons why better utilization cannot be practiced at the logging site.

It was noted that raw material supply does not appear to be a problem at the mill despite brief seasonal transportation problems due to low water levels in the river. This may contribute to a corporate perception of an abundance of raw material and therefore, be reflected in exacting utilization standards as practiced by the logging operation.

NRM/ARD CONSULTANCY REPORTS

NO.	TITLE	AUTHOR
1.	Procurement Plan For Research Equipment at Bukit Baka and Equipment Installation at Samarinda Forestry Research Station	Roy Voss
2.	Agroforestry in Bukit Baka/ Bukit Raya	W.G. Granert
3.	Pengukuran dan Pemetaan Topografi Sebagian Daerah Taman Nasional Bukit Baka/Bukit Raya	Sahri Denny, cs
4.	Applied Research Recommendations for Production Forest Management An Economic and Ecological Review of the Indonesian Selective Cutting and Replanting System (TPTI)	Lisa Curran & Monica Kusneti
5.	Balancing Forest and Marine Conservation with Local Livelihoods in Kalimantan and North Sulawesi	Jill M. Belsky
6.	Proposal to the GOI and USAID for the Development of Comprehensive Environmental and Natural Resources Accounts (CENRA) for Economic Planning and Management	Henry Peskin & Joy Hecht
7.	Bukit Baka Mini–Hydraulic System Implementation Plan	Michael Johnson
8.	Final Report: Bukit Baka – Bukit Raya 1992	Roy Voss
	Station Protocol: Bukit Baka – Bukit Raya 1992	Roy Voss
	Research Protocol: Bukit Baka – Bukit Raya 1992	Roy Voss

NO.	TITLE	AUTHOR
9.	Environmental Education and Awareness in Bukit Baka (vol.1)	Nancy Bergau
	Environmental Education and Awareness in Bukit Baka Guide to Environment and Fire Campaign (vol.2)	Nancy Bergau
10.	Recommendations for Controlled Timber Harvesting in the SBK Forest Concession	John Hendrison
11.	Cruiser Identifications at SBK and Local Uses of Trees by Local People	Jim Jarvie
12.	Community Water Supply Feasibility Study for Bukit Baka–Bukit Raya, Kalimantan	Rick McGowan & Alfonso Rieuwpassa
13.	Report on NRM Library Consultancy September – December 1992	Dachlan Cartwright
14.	Livelihoods Strategies and Marine Resource Among Residents of Bunaken National Park, North Sulawesi: Recommendations for Local Involvement in Park Management	Jill M. Belsky
15.	A Competitive Awards Scheme for Applied Forest Management and Nature Conservation	Peter R. Burbridge
16.	Design of a Management Information System for the Natural Resources Management Project	Joy Hecht
17.	Environmental Education and Awareness Strategy for Bukit Baka – Bukit Raya National Park (volume 1)	Nancy Bergau
	NGO Training for a Local Environmental Education and Awareness Strategy (volume 2)	Nancy Bergau
18.	Water Supply and Sanitation (WS&S) Program in Bukit Baka – Bukit Raya, Kalimantan Program Status Report	Rick McGowan

NO.	TITLE	AUTHOR
19.	The Role of NGOs in Supporting the NRM Project in Bukit Baka – Bukit Raya National Park	Marcel de Brune
20.	Integration of Provincial Regional Development Planning into the Bukit Baka – Bukit Raya National National Park Management Plan	E. Edwards McKinnon
21.	Communications, Information, and Education Strategy for Bunaken National Park	Nancy Bergau
22.	Report on the Preparation of a Design for a Study of the Natural Resource Impacts of Marine Sector Policy During the Second Long–Term Development Plan Period	Andrea S. Katz
23.	Management Information System for the Natural Resources Management Project Report on the Second Mission to Jakarta July – August 1993 (Volume 1)	Joy Hecht
	Management Information System for the Natural resources Management Project User Manual and Technical Documentation (Volume 2)	Joy Hecht
24	Water Supply and Sanitation Program in Bukit Baka – Bukit Raya, Kalimantan Status Report No. 2	Jonathan Hodgkin
25.	Report on Communities Living Within Reach of The Bukit Raya National Park in Kalimantan Tengah	Michael Heppell
26.	Effective Protection and Natural Resource Management in Indonesia	Janis Togashi
27.	Conservation Areas in Production Forest	Jim Jarvie
28.	Economic Issues Associated with the TPTI Management System	Steven E. Dennison
29.	A Review of Planning Arrangements for Sustainable Management of Natural Production Forest on Forest Concessions in Indonesia An Interim Report	Ian Armitage
30.	Eco–Tourism Development in Bunaken National Park and North Sulawesi	Richard Sandler

NO.	TITLE	AUTHOR
31.	Environment and Development in Indonesia An Input – Output Analysis of Natural Resource Issues	Hamilton, C. et al
32.	Survei Pemakaian Tumbuhan Obat di Nanga Juoi, Kecamatan Menukung, Kalimantan Barat	Izefri