PN-ABR-771 ISN=88619

09001-020-030

October 28, 1982

SYSTEM REQUIREMENTS ANALYSIS AND DESIGN STUDY FOR AN OFFICE AUTOMATION SYSTEM IN THE OFFICE OF THE ADMINISTRATOR AND FOUR SUPPORTING OFFICES

Agency for International Development
Washington, D.C.

BOOZ·ALLEN & HAMILTON INC.

4330 EAST WEST HIGHWAY • BETHESDA, MARYLAND 20814 • TELEPHONE: (301) 951-2200 • TELEX: 710-824-0552

BOOZ·ALLEN & HAMILTON INC.

4330 EAST WEST HIGHWAY • BETHESDA, MARYLAND 20814 • TELEPHONE: (301) 951-2200 • TELEX: 710-824-0552

October 28, 1982

Mr. Linwood A. Rhodes
SER/DM/IM
Agency for International Development
Washington, D.C. 20523

Subject: IQC No. AID/OTR-I-1860, Work Order No. 8, ES/EXRL Requirements Analysis and Design Study -- Final Report

Dear Mr. Rhodes:

Booz, Allen & Hamilton Inc. is pleased to submit this final report of our study to determine the requirements and design for an office automation system in the Office of the Administrator, Executive Secretary, Bureau for External Relations, Office of Legislative Affairs and Office of Public Affairs. The findings, conclusions and recommendations concerning the office automation strategy and equipment configuration discussed in the report were presented in draft form to the ES/EXRL working group.

As specified in the work order, the thrust of this effort has been to determine the requirements and design of an office system to meet the word processing needs of the subject offices. A secondary objective was to survey the data processing interests among the offices and assess the implications of these interests for the advanced office system.

Chapter I of the report presents key background information on the study. Chapter II describes the current environment in the offices with respect to their document preparation work load and data processing interests. Chapters III through VI of this report concern the recommended office system, word and data processing applications to be operated on the system, system management and implementation of the system. Chapter IV also describes the nature of additional design and development work which will be necessary to pave the way to meet ES/EXRL's data processing needs. Chapter VII presents a cost-benefit analysis of the recommended system.

We have enjoyed the close cooperation of the ES/EXRL and SER/DM/IM offices throughout the study.

Very truly yours,

BOOZ·ALLEN & HAMILTON Inc.

John C. Newman
Vice President

TABLE OF CONTENTS

		Page Number
	MANAGEMENT SUMMARY	1
I.	BACKGROUND	I-1
II.	CURRENT ENVIRONMENT	II-1
III.	EQUIPMENT CONFIGURATION	III-1
IV.	SYSTEM APPLICATIONS	IV-1
V.	SYSTEM MANAGEMENT	V-1
VI.	IMPLEMENTATION PLAN	VI-1
VII.	COST-BENEFIT ANALYSIS	VII-1
APPENDIX A -	ADP SYSTEM INTERESTS	A-1
APPENDIX B -	WORK LOAD DOCUMENTATION	B-1
APPENDIX C -	SYSTEM MANAGEMENT STAFF RESPONSIBILITIES	C-1
APPENDIX D -	PROCEDURES	D-1
APPENDIX E -	OUTLINE OF OIS TRAINING MANUAL	E-1
APPENDIX F -	BACK-UP FOR ESTIMATED WORK DAYS RELEASED	F-1

MANAGEMENT SUMMARY

MANAGEMENT SUMMARY

In July 1982, the Office of Data Management contracted with Booz, Allen and Hamilton Inc. to design an advanced office automation system for several top-level elements of the Agency for International Development. This management summary highlights the major results of this study to define a system meeting the study offices' word processing needs and advanced applications.

1. THE DIVERSE NATURE OF AGENCY MANAGEMENT AND STAFF FUNCTIONS PERFORMED BY THE STUDY OFFICES IS REFLECTED IN THE MIX OF WORD AND DATA PROCESSING REQUIREMENTS IDENTIFIED

The Office of the Administrator (A/AID) is responsible for the overall direction of U.S. Economic Assistance Programs and administration of appropriations made available under the Foreign Assistance Act. The Office of the Executive Secretary (ES), Bureau for External Relations (EXRL), Office of Public Affairs (OPA) and Office of Legislative Affairs (LEG) perform a variety of management functions in support of A/AID and the Agency's operating components.

The information processing requirements and intersts of these offices include a mix of word and data processing applications.

- The annual typing work load in the subject offices is approximately 69,500 pages (original and revision pages). Approximately 59,000 pages, or 85 percent of the total annual typing work load, represents the applicable word processing work load. This consists of various internal and external memoranda, correspondence, analytical and summary reports, news articles and publications.

- The majority of the ADP systems interests identified involve the generation of reports or inquiries from a file or files of standardized data. Many of these applications are currently manually operated and have not been completely developed; others are in the conceptual design phase, while a limited number are operational on the Agency's main computer.

A portion of the current typing work load and, to a limited extent, the data processing applications, are prepared and operated on eight stand-alone word processors. Use of this equipment varies in each office depending upon location of the equipment (vis-a-vis staff access), machine capabilities and operator knowledge, ability and training in the use of the equipment.

2. AN ADVANCED WORD PROCESSING SYSTEM IS RECOMMENDED TO MEET THE OFFICES' AUTOMATION NEEDS BECAUSE OF ITS SUPERIOR CAPABILITIES AND CONVENIENCE

Advanced word processing equipment is recommended for the ES/EXRL study offices because it is capable of accommodating not only the word processing work load, but also the majority of the records processing work load in these offices. This equipment is more sophisticated than the equipment currently in use and is more capable of performing the types of information manipulation and word processing needs identified.

ES/EXRL's equiment configuration is based on the Wang Office Information System (OIS) 140 Model III. (AID joined the State Department in an exclusive service contract with this vendor for word processing equipment.) The OIS 140 is a shared-logic word processing system consisting of workstations and other equipment connected to a central processing unit. It offers several advantages over the existing equipment, which stem from the following set of capabilities.

- Shared-logic design -- Several characteristics of a shared-logic system, such as on-line storage and access of information on the system, multiple user access to the same set of on-line information, and between workstation communications, offer additional flexibilities over the current stand-alone equipment in use.

- Advanced word processing features -- In addition to efficiently processing typed documents, this system includes several standard and optional features which store, retrieve, and reorganize information, thus, providing higher levels of automated support to the study offices.

- Expansion Capacity -- As ES/EXRL's work load and office automation needs change, other pieces of equipment can be attached to the system and its on-line storage capacity can be increased.

Linkage to computers and other automated systems -- It is technically feasible to connect this system to the Agency's central computer and to office automation systems in all other AID offices if the need arises.

ES/EXRL's existing word processing and data processing work load estimates demonstrate a need for a total of 13 workstations and 8 printers, which should be located in the study offices, primarily on the basis of work load levels, as follows:

Organization	Workstations	Printers
A/AID	2	1
ES	5	3
EXRL	1	1
LEG	2	1
OPA	3	2

One of the ES workstations should be situated in the room housing the OIS central processing unit, as a control module. In addition, it is recommended that two Wang 5-3 stand-alone word processors currently in use be retained, one each by EXRL and OPA. Finally, the appropriate software to operate the system and the applications identified is recommended.

3. THE BASIC AND ADVANCED CAPABILITIES OF THE OIS 140 ARE SUITABLE FOR THE OFFICES' WORD AND DATA PROCESSING APPLICATIONS

The word processing features of the OIS 140 will be useful to the study offices primarily in the preparation of textual and tabular documents. With the increased capacity of the recommended OIS configuration, the total applicable word processing work load in the offices can be automated. Currently, an estimated one-half to two-thirds of the total annual typing work load is produced on the eight stand-alone word processors. Other benefits of the OIS will be enhanced quality and timeliness of document preparation, as well as greater convenience due to the OIS's advanced functions, including:

- Powerful editing -- facilitiates document revision by permitting a variety of revisions to be made to all or selected portions of text or tables through replacing, deleting, inserting, reformatting, adding, or reorganizing their contents.

- Glossaries -- facilitates the use of repetitive keystrokes which are stored in the system and can

be recalled as required. This is particularly advantageous for producing documents that have standard formats and/or repetitive text or tables.

Document merge -- facilitates document revision and standard correspondence production by permitting the merging of two or more documents into one.

The advanced features of the OIS 140 will support the majority of the ADP system applications identified by the study team. The size of these applications and the complexity of the manipulations required suggests that at least two of the software features available on the OIS 140 can be used to perform them -- List Processing and Sort. List Processing is an administrative record keeping and information processing function that permits the creation, storage and retrieval of subsets of information from a file or files of standard format records. Sort is a text editing feature that groups records in ascending or descending order in a file according to user-specified instructions. Seven of the applications identified are described in Chapter IV, in flowchart and narrative form, in order to model how the OIS would be used to automate them. These models are among the highest priority of the applications identified and include:

- A/AID, ES -- Executive Correspondence and Control and Tracking System
- A/AID -- Meetings System
- A/AID, ES -- Reception Invitations System
- EXRL -- External Groups System
- EXRL -- Conferences Attended
- LEG -- Telephone Inquiries System.

These will serve as the basis for the detailed design and implementation work required to automate the systems.

4. THE SUCCESSFUL IMPLEMENTATION OF THE OFFICE SYSTEM HEIGHTENS THE NEED FOR SENIOR MANAGEMENT ATTENTION TO NEW SYSTEM MANAGEMENT AND CONTROL STRUCTURES

As an ES/EXRL-wide system, a single source of decision making and control is required to plan, operate, maintain, and monitor the OIS 140. This is especially critical since the study offices are independently managed and perform a diversity of management and information processing functions. It is recommended that this management responsibility be assigned to ES where two staff members should

be selected for the central management roles of system manager and assistant system manager. This recommendation is based on the current organizational perspective, responsibility, and authority of ES which cross-cuts all the study offices involved. In addition, each office director should select a lead operator to coordinate all office-level OIS activities, as well as designated operators for each workstation. Descriptions of the roles and responsibilities of these key system staff are included in Chapter V and Appendix C to this report.

To promote successful operation of the system, a number of activities must be performed in a standardized manner. These new operating policies and procedures will be incorporated into an ES/EXRL-specific manual and provide guidance on how the system is organized, its capabilities and use, who and how it should be operated.

Equally as important is the development of a training strategy to develop fundamental equipment operation skills in system operators and to orient all system users to the OIS. Vendor-provided training must be supplemented with in-hours training available and incorporated into the training strategy as a basis for planning and obtaining the additional resources needed to train ES/EXRL managers, users, and operators.

I. BACKGROUND

I. BACKGROUND

In July 1982 the Office of Data Management contracted with Booz, Allen & Hamilton Inc. to design an advanced office automation system for several top-level elements of the Agency for International Development (AID). This background chapter presents the specific objectives of the assignment, its scope and approach. The last section outlines the organization of this design document.

1. THE PURPOSE OF THIS STUDY IS TO DESIGN AN OFFICE AUTOMATION SYSTEM FOR WORD PROCESSING SUPPORT AND ADVANCED APPLICATIONS FOR FIVE TOP-LEVEL ORGANIZATIONAL ELEMENTS OF AID

This study is part of the ongoing implementation of advanced office automation systems under the direction of the Office of Data Management (M/SER/DM). The five organizational units which comprise the organizational scope of the design are:

- The Office of the Administrator (A/AID)
- Office of the Executive Secretary (ES)
- Bureau for External Relations (EXRL)
- Office of Legislative Affairs (LEG)
- Office of Public Affairs (OPA).

As this design study shows in subsequent chapters, the offices' automated applications needs fall into the categories of word processing or one of the advanced features. Word processing support is directed at the creation and revision of textual material in any form. The advanced features address the document preparation tasks involving highly formatted textual material which is produced repetitively or the creation and updating of records in files, including some manipulation of their data.

In the AID context, an office automation system design contains the following elements:

- A detailed equipment configuration, which describes the type, number, and location of necessary hardware

- Associated software which is provided by the equipment vendor to operate the system and provide special functions, such as list processing

- Specific document-related applications which will be performed on the system

- Management arrangements to operate the system

- An implementation "blueprint," including identification of training requirements, to guide installation and start-up.

Each of these elements has been designed and is described in subsequent chapters. This design provides the foundation for pursuing the subsequent tasks of implementation.

2. THE DESIGN WAS DEVELOPED IN CLOSE CONSULTATION WITH THE FIVE OFFICES INVOLVED AND M/SER/DM

With the help of the Working Group appointed by the offices involved, the study team developed a basic understanding of their organizational structure, work flows, work load, and existing and desired applications for an office automation system. The primary vehicle for this data collection was interviews with professional and support staff presently or prospectively concerned with the new system.

During the design study, an effort was made to frequently confirm intermediate findings and conclusions. For example, work load estimates and the basic description of each application were confirmed with the offices. Likewise, the preliminary configuration and its underlying rationale was the subject of a meeting with the Working Group, which was briefed on system requirements using a detailed outline.

The M/SER/DM project officer, who worked closely with the team throughout the study, reviewed earlier findings, conclusions, and recommendations, particularly the detailed equipment configuration.

3. BOOZ, ALLEN & HAMILTON HAS BEEN RETAINED TO PROVIDE IMPLEMENTATION SUPPORT FOR THE FIVE OFFICES INVOLVED IN THE STUDY

At this writing, Booz, Allen has been engaged by M/SER/DM to provide additional effort over a four-month period to assist ES/EXRL with selected implementation support. This support includes:

- Development of a policies and procedures manual

- Preparation of general training materials for system users

- The detailed design, programming, and demonstration of the advanced applications described in Chapter IV of this report, including provision of programming documentation and users' manuals.

4. THIS REPORT PRESENTS THE DETAILED DESIGN ELEMENTS IN SIX CHAPTERS

This design document is organized as follows:

- Chapter II describes the current environment for office automation, including organizational structure, functions, documents prepared, and work load in quantitative terms

- Chapter III, based on the environment and a sizing of present and prospective work load for word processing and advanced functions, presents the recommended equipment configuration, including the number and disposition of workstations and printers

- Chapter IV describes in considerable detail the seven candidate applications for advanced function support (list processing, glossary)

- Chapter V recommends specific management arrangements for the system, including a description of the positions and additional duties which are involved

- Chapter VI presents the detailed implementation plan for the system

- Chapter VII, per the requirements for a justification of the equipment acquisition, presents a discussion of the estimated costs and benefits of the system.

Appendices to the body of the report provide detailed supporting information for several sections.

II. CURRENT ENVIRONMENT

II. CURRENT ENVIRONMENT

This chapter presents study findings on current document preparation and information processing/handling activities in the subject offices. These activities, and the opportunities they present for automation, shape the system design presented in the chapters which follow.

1. THE SUBJECT OFFICES REPRESENT A DIVERSITY OF AGENCY MANAGEMENT AND STAFF FUNCTIONS AND INFORMATION PROCESSING/HANDLING NEEDS

The Office of the Administrator (A/AID) is responsible for the overall direction of U.S. Economic Assistance Programs and administration of appropriations made available under the Foreign Assistance Act. The four subject staff offices perform a variety of management functions in support of A/AID and the agency's operating components. Approximately 90 full-time staff are employed to carry out the responsibilities of these offices.

The current organizational structure of the subject offices is presented in Exhibit II-1, on the following page. A review of the major functions of each of these offices and their information processing/handling needs illustrates the diverse nature of the work performed.

(1) Office of the Administrator (A/AID)

The Office of the Administrator consists of the Administrator, Deputy Administrator and Counselor. This office has 12 staff positions, including special assistants and administrative/clerical personnel. The major decision-making functions performed by this office include:

- Policy recommendations on foreign assistance to the President and Secretary of State
- Decisions on AID policy, management and program direction
- Selection among alternative policies and actions formulated by AID staff.

EXHIBIT II-1
Offices Included in the Office Automation Design Study
For The A/AID and Four Supporting Offices

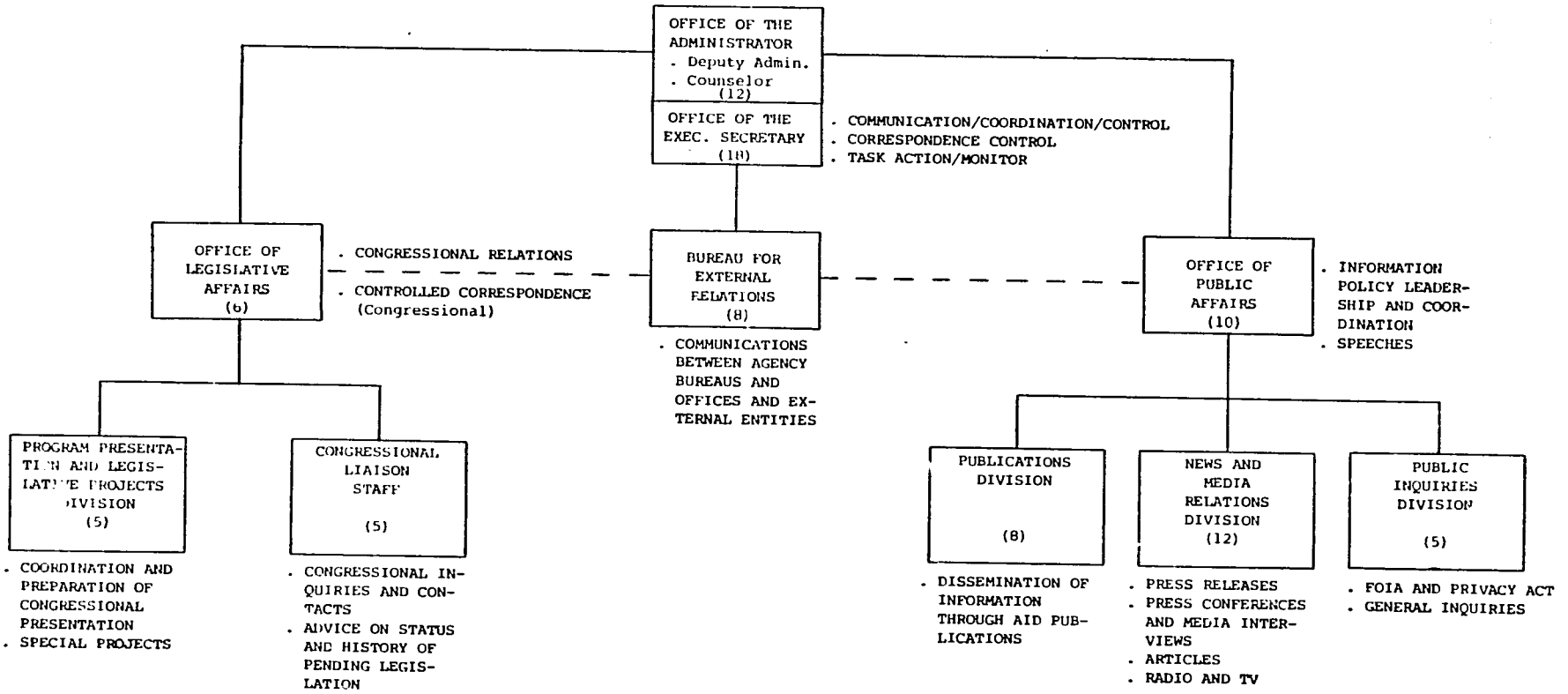

SOURCE: January 1982 AID Organization Chart, Office of Management Planning
Numbers in parentheses reflect total staff on-board 7/12/82.

The nature of these responsibilities requires a high level of interaction, consultation and coordination with top-level Administration Officials, members of Congress, foreign government officials and individuals in the development assistance community. The need for comprehensive and timely information to support the decision-making process at this level is critical to policy direction and guidance eminating from this office. This information cross-cuts all areas of Agency administrative management and programmatic operations, as well as relations with the development assistance community. The media of information flows typically include executive correspondence, top-level action, briefing and information memoranda, and highly summarized digests of significant activities.

(2) Office of the Executive Secretary (ES)

The Office of the Executive Secretary serves as the primary hub for communications and coordination between A/AID and the Agency's senior staff. With a staff of 18 professional and administrative/clerical personnel, ES performs several critical support functions for A/AID including:

- Control of executive correspondence and virtually all other information directed to and handled by A/AID
- Assignment and follow through on A/AID tasks assigned to the bureaus, offices and selected individuals
- Coordination of A/AID and senior staff scheduling and meeting preparation
- Anticipation of other A/AID information and logistical support needs.

These ES functions require a high level of verbal and written communications. These activities and their associated information processing and handling responsibilities require ES to:

- Control the information flow to limit top-level handling to essential documents only
- Track information to ensure timely response to tasks and executive correspondence

- Track A/AID's scheduled meetings and events and their associated document handling requirements to ensure timely preparation

- Document selected meetings and events to provide reference information for future meetings.

(3) Bureau for External Relations (EXRL)

This Bureau, which employs a staff of eight professional and clerical personnel, identifies organizations and other entities outside AID that have an interest in AID policies and programs. Along with this ongoing identification process, communications and productive relations in areas of common interest are facilitated between AID and these outside entities.

The information processing/handling needs of this Bureau include:

- Descriptive information about outside entities which is useful for facilitating communication on appropriate topics

- Capacity to produce correspondence to selected entities for a variety of purposes

- Capacity to perform analysis of the way AID communicates with outside entities, e.g., publications review.

(4) Office of Legislative Affairs (LEG)

This office serves as the central point of contact between the Agency and the Congress. In addition, LEG advises the Administrator and the Agency on legislative developments concerning AID and coordinates the preparation, production and submission of the (annual) Congressional Presentation (CP). LEG has a staff of 16 professional and administrative/clerical personnel who are divided between two organizational units.

As the focal point for Congressional relations, LEG's information processing needs are highly focused, yet extensive, and include:

- Legislative activities tracking

- Legislative documents inventory

- Control of legislative correspondence
- Capability to edit CP sections prepared by AID Bureaus
- Provision of background information on participants and issues to support and prepare for congressional meetings.

(5) Office of Public Affairs (OPA)

OPA is responsible for public information policy leadership and coordination to ensure that information about AID policies, objectives and operations is properly disseminated to the public and the press. This includes publicizing AID programs through periodic publications and information releases and responding to inquiries from news organizations and the general public. In addition, OPA prepares speeches for A/AID and maintains resources for use by the AID Speakers Bureau. A staff of 35 professional and support personnel divided among three divisions is employed in this office.

The information needs of this office focus on the production and dissemination of written communications and include:

- Capacity to produce and revise various types of copy for AID publications
- Capacity to rapidly prepare information releases and responses to inquiries
- Mailing lists and address label storage and production capabilities.

2. THE INFORMATION PROCESSING REQUIREMENTS AND INTERESTS OF THE OFFICES INCLUDE A MIX OF WORD AND DATA PROCESSING APPLICATIONS

During the course of this study, Booz, Allen documented the major characteristics and work processes of information handling and document preparation activities in the subject offices. The results of this effort are discussed in the following sections.

(1) The Word Processing Applications of the Offices Include Memos and Other Textual Documents, Lists and Correspondence

Word processing applications, in general, involve preparation and revision of textual and tabular documents. These documents do not require any manipulations of data, such as parametric search or computation. The large majority of the document production work load in the offices consists of various internal and external memoranda, correspondence, analytical and summary reports, news articles and publications. These documents are prepared for a unique purpose and, thus, are "one-time" in nature as compared to regular periodic reports.

Exhibit II-2, on the following page, presents a representative listing of the documents prepared in the offices which are suitable for word processing applications. Samples of many of these documents were reviewed by the study team during the data collection effort of this study.

(2) The Offices Have Considerable Interest In Acquiring Data Processing Capabilities

Data processing applications, in general, involve the generation of reports or inquiries from a file or files of standardized data. This is accomplished through parametric search, sort or other complex manipulations. (Parametric search is the process used to select and retrieve records from a file(s) based on user specified criteria, or characteristics, common to each record.)

As described in Chapter 1, a secondary objective of this study is to identify the ADP interests in these offices for future detailed analysis and possible application on advanced word processing equipment. Exhibit II-3, following Exhibit II-2, lists the names of the applications identified. Many of these applications are currently manually operated and have not been completely developed; others are in the conceptual design phase, while a limited number are operational on the Agency's main computer. Appendix A provides a full description of each identified ADP system interest.

EXHIBIT II-2
List of Documents Prepared/Applications
Suitable for Word Processing

OFFICE OF THE ADMINISTRATOR AND EXECUTIVE SECRETARY

- A/AID Calendar
- Memos
- Correspondence
- Briefing Papers
- Speeches
- Misc. Lists
- Cables

EXRL

- Memos
- Correspondence
- Misc. Form Letters
- Briefing Books
- Misc. Lists

LEG

- CP (mainly revision of material prepared by bureaus)
  - Summary Volume
  - Central Programs Volume
  - Geographic Bureau Program Volumes
- CP Briefing, Mark-up, Floor, and Conference Books
- CP Distribution List
- Legislative Reports
- LEG Daily Report
- LEG Weekly Schedule of Events
- LEG Action Log
- Legislative Action Calendar
- Bio Briefing History Book
- Contract Award Notification Letters
- Congressional Notification Log
- Misc. Lists
- Memos
- Cables
- Correspondence
- Cong. Record Review Distribution Form

EXHIBIT II-2 (Continued)

OPA

- News and Other Information Releases
- Articles
- Speaker's and Press Kits
- Speeches
- Form Letter/Mailing List Merge
- Background Papers
- "Front Lines" Monthly
- "Horizon" Magazine
- Misc. Pamphlets
- Publications Indexing
- Responses to FOIA, Privacy Act, and General Inquiries
- Revision of FOIA and Privacy Act Handbooks
- Correspondence and Memos
- Mailing and Other Lists
- Misc. Reports and Tables
- Misc. Logs

EXHIBIT II-3
ADP Systems Interests

OFFICE OF THE ADMINISTRATOR AND EXECUTIVE SECRETARY

- Executive Correspondence Control
- Task Assignment Tracking
- Meetings Data
- Reception Invitations List
- ES Cable Log

EXRL

- External Groups
- Task Assignment Tracking
- Personnel Data
- Communications Review Board
- Advisory Committees
- Invitations List
- Conferences Attended

LEG

- Congressional Correspondence Control
- Congressional Documents Notebook
- Contracts Award Data
- Congressional Tracking System (c)
- Telephone Inquiries Log
- Access to Budgetary Data

OPA

- Mailing Lists Storage/Label Production (c)
- World Development Letter/Indexing (c)

(c) Denotes that system is currently operational on the Agency main computer

3. THE AGGREGATE WORD PROCESSING WORK LOAD IN THE OFFICE IS APPROXIMATELY 59,000 PAGES PER YEAR

The annual typing work load in the subject offices is estimated at approximately 69,500 pages. This includes both original and revision pages which are produced on either standard typewriters or word processors currently in use. However, not all of the annual typing workload is applicable to word processing equipment. Of the total annual typing work load, approximately 59,000 pages, or 85 percent represents applicable word processing work load.

(1) The Word Processing Work Load Is A Subset Of the Total Typing Work Load in the Offices

The principal advantage of word processing equipment over standard typewriters is in the ease with which documents can be revised. There is, generally, no advantage in using word processing equipment to prepare documents that are not subject to revision or repetitive production. As indicated previously, nearly 59,000 pages per year represents the applicable word processing work load in the subject offices. This figure excludes one time unique purpose documents such as selected cables, standard agency forms and notes (less than one page in length) prepared by the subject offices which are not subject to revision or repetitive production.

Exhibit II-4 on the following page, presents a breakdown, by office, of the total typing work load ("one-time" and revisable documents) and word processing work load (revisable documents only). Approximately 55 percent of the total applicable word processing work load is prepared in OPA. Within the individual study offices, the applicable word processing work load ranges from 45 (ES) to 97 (OPA) percent of their total typing work load (for those offices).

Exhibit II-5, following Exhibit II-4, presents a breakdown of the applicable word processing work load into original and revision pages. As shown, slightly more than 50 percent of the estimated annual word processing work load involves revision pages. However, the ratio of original to revision pages, which approximates 1:1.2 in total, ranges from a low of 1:0.15 in EXRL to a high of 1:2.45 in OPA.

EXHIBIT II-4
Total Typing Work Load and Portion
Applicable to Word Processing

OFFICE	TOTAL TYPING WORK LOAD* (pages)	APPLICABLE W/P WORK LOAD* (pages)
A/AID	7,274	5,456
ES	12,611**	5,632
EXRL	4,684	4,266
LEG	11,289	10,694
OPA	33,732**	32,738
TOTALS	69,500	58,786

* Includes both original and revision pages
** Includes notes and other documents @ less than 1 page.

Source: Work load data developed in conjunction with the offices

EXHIBIT II-5
Breakdown Of Original and Revised Pages
For Estimated Annual Word Processing Work Load

OFFICE	ORIGINAL	REVISED	TOTAL
A/AID	1,810	3,646	5,456
ES	4,024	1,608	5,632
EXRL	3,708	558	4,266
LEG	7,385	3,309	10,694
OPA	9,492	23,246	32,738
TOTALS	26,419	32,367	58,786

EXHIBIT II-6

Current Word Processing Equipment

Office	Equipment
DA/AID	IBM Display Writer
ES	Wang 5-3
EXRL	Wang 5-3
LEG	Wang 5-3
	Xerox 850 LD
OPA	Wang 5-3 (2)
	Xerox 850 LD
TOTALS	5 Wang 5-3s
	1 IBM Display Writer
	2 Xerox 850 LD

Overall, the estimated number of revision pages may seem low in comparison with the document production of a typical office environment as previously reported in the other bureaus/offices. This is, in part, due to the nature of the operations performed within these individual offices. For example, aside from the documents prepared by ES, this office reviews and clears a substantial amount of correspondence prepared in other bureaus/offices. Rather than editing and revising these documents, as required, they are typically returned to the originating bureau for correction. In addition, when revisions are made to selected documents reviewed by these offices, it requires the rekeying of the entire document (because of the variety of the typing font styles of the various brands of typewriters and word processors in AID) and, consequently, is included in the original page count.

(2) A Portion of the Current Typing Work Load Is Prepared On Eight Stand-Alone Word Processors

Exhibit II-6, following Exhibit II-5, lists the model and location of the word processors currently in use by the subject offices. This includes the equipment of several manufacturers which has been leased or purchased. Use of this equipment varies in each office depending upon location of the equipment (with respect to staff access), machine capabilities and operator knowledge/ability/training in the use of the equipment.

4. THE REQUIREMENTS ANALYSIS SUGGESTS THAT ALL BUT A FEW OF THE DATA PROCESSING INTERESTS CAN BE PERFORMED ON ADVANCED WORD PROCESSING EQUIPMENT

Several of the ADP systems interests identified by the study team and listed in Exhibit II-3 can be performed on the advanced word processing system envisioned for these offices. Two of the applications would require computer support which cannot be performed on the word processing equipment without degrading the system's performance. Three of the ADP applications listed are currently operating on the AID main computer and would not be converted to the advanced word processing equipment.

(1) Two Applications Appear to Need Some Computer Support/Linkage

Our survey of the general ADP interests, expressed by the staff interviewed, indicates that the EXRL Personnel System and LEG access to budgetary data can more efficiently be performed through the AID computer.

- EXRL Personnel System probably requires computer support due to the anticipated large size of the data base

- Access to budgetary data for use in the CP preparation would involve tapping into the Program Budget Data System (PBDS) which resides on the AID main computer (this is not an immediate need, according to LEG).

Given that the advanced word processing system has limited data processing capabilities, these applications should be included in an ADP systems requirements analysis to determine the design and development effort required to implement them.

(2) The Remaining Interests Appear to be List Processing or Sort Applications, Based On The Functions That Such Processing Is To Accomplish

At least two of the software features available on the advanced word processing equipment can be used to perform the remaining ADP systems interests included on Exhibit II-3. Based on the nature and complexity of the information processing requirements associated with these systems, it appears that either the list processing or sort applications would be the most complex manipulations required to perform them.

List processing is an administrative recordkeeping and information processing function. It is an optional software package available on the advanced word processing equipment. This capability permits subsets of information to be created from a file or files of standard format records. These records can be retrieved from a file based on conditions or "parameters" specified for the selection process. The parameters correspond to one or more variables, or "fields", by which the records in the file are classified. The resulting subset of records selected can be subject to sorting or arithmetic computation and formatted, as required, into a report. A parametric

search is the central function required for these applications. Although useful for this type of storage and selective retrieval application, list processing is not a general substitute for data processing. For example, relatively large applications such as those described in the previous section are generally processed more slowly and the data involved cannot be manipulated at the same level of complexity as through data processing.

Sort is a text editing feature that groups records in ascending or descending order in a file according to a user specified field. This field is a characteristic common to all the records in a file. The sort function can also be used to arrange lists of information into ascending or descending order, according to a user-specified field. This would include sorting multiple pages of a single document or combining and sorting several documents into one final document. The specifications of a particular sort can be saved on the system and recalled at a later time.

Exhibit II-7, on the following page, summarizes key characteristics about these ADP interests. These characteristics include the estimated record length and maximum number of records to be maintained, estimated output frequency and most complex manipulation required. Since the file sizes of the systems are within the limits manageable by an advanced word processor and the output frequencies for report preparation would not, individually, pose a problem for system responsiveness, the study team has concluded that they can be performed on advanced word processing equipment. In addition, some of the reports produced and data bases maintained for selected applications, e.g., LEG phone inquiries and EXRL communications review board, are currently performed on the stand-alone word processors used by these offices.

(3) <u>There Currently Are Two ADP Applications Operating On The AID Main Computer</u>

In addition to utilizing automated word processing, two of the subject offices are users of data processing in AID. Currently there are two data systems, one of which is operated by LEG, the other by OPA. Summaries of these two systems are as follows:

EXHIBIT II-7
ADP SYSTEMS INTERESTS SUMMARY

Org	System*	Status	Estimated Record Length		Estimated Max. No. Records	Estimated Output Frequency	Most Complex Manipulation	Application
			Fields	Char.				
A	Meetings	Manual	10	150	300	Bi-weekly	Search	L/P
A	Receptions	Manual	10	150	1000	Bi-weekly	Search	L/P
ES	Tasking	Manual	10	150	100	Daily	Search	L/P
ES	Correspondence	Manual	30	600	600	Daily	Search	L/P
ES	Cable Log	Manual	10	150	500	Weekly	Sort	W/P
EXRL	Ext. Groups	Conceptual	20	300	600	Weekly	Search	L/P
EXRL	CRB	Manual	10	100	1000	Monthly	Search	L/P or ADP
EXRL	Adv. Committees	Manual	20	350	200	Monthly	Search	L/P
EXRL	Invitations	Manual	10	150	1000	Bi-weekly	Search	L/P or ADP
EXRL	Tasking	Manual	10	150	300	Daily	Sort	L/P or W/P
EXRL	Conferences	Manual	10	150	150	Bi-weekly	Sort	L/P or W/P
LEG	Contracts	Conceptual	TBD	TBD	TBD	TBD	TBD	TBD
LEG	Documents	Manual	10	150	500	Weekly	Sort or Search	W/P or L/P
LEG	Phone Inquiries	Manual	10	150	100	Weekly	Sort	L/P or W/P

*Excludes systems interests that clearly require the processing capabilities of a computer: EXRL--Personnel; LEG--Budget Data System Access

Key: TBD: To be determined; L/P: List Processing; W/P: Word Processing (Sort): ADP: Automated Data Processing (via computer)

- LEG - Congressional Tracking System -- is the system used to support AID Congressional relations activities by maintaining Congressional reference data and tracking Congressional contacts. This system has been developed and, currently, the data base is being automated in preparation for first run reports. The reports produced will be used to summarize Congressional contacts, analyze various data field content and respond to inquiries of individual records maintained.

- OPA-Mailing List/Label Generator -- is a system used to maintain name and address files for OPA mailing lists and batch print mailing labels. Because of the high volume of name and address labels (about 25,000) they are printed on a high speed printer.

These offices use remote data processing terminals for data system operations and individual applications. Due to the size of these applications and the fact that they are currently performing at a satisfactory level to the users, conversion of these applications to an advanced word processor is not necessary.

5. ANALYSIS OF AID'S CABLE OPERATIONS AND STATE'S CORRESPONDENCE CONTROL AND CABLE SYSTEMS PROVIDES USEFUL INFORMATION TO BE INCORPORATED INTO ES/EXRL'S SYSTEM DESIGN

As part of the data collection effort associated with the requirements analysis for word and data processing needs in the study offices, the study team analyzed AID's cable operations and the State Department's Executive Correspondence Control System and cable operations. The objective of this analysis was to identify useful concepts and procedures to AID and to determine equipment compatibility for possible integration into the ES/EXRL automated system. The results of this analysis and its impact on the system design, described in the next chapter, are presented in the following sections:

(1) Several Useful Correspondence Control Concepts and Procedures Were Identified in the State Department's Executive Correspondence System

The State Department Executive Correspondence System is responsible for processing over 40,000 pieces, or nearly four times the amount handled by ES/CCS, controlled correspondence annually. It is

fully automated in terms of records processing, correspondence tracking, storage, maintenance, and retrieval. (State cable traffic, estimated at over one million pieces annually, is handled on a separate system.) Despite the differences in volume and automated retrieval support, there are some similarities in the process and controls, work load distribution, staff assignments, and status reporting between the State and AID systems. In addition, several techniques associated with the State system can be used in the ES Correspondence Control System. These techniques would improve the efficiency and effectiveness of AID's correspondence control system in the following areas:

- Process and controls -- Summary abstracts of each piece of correspondence are input into State's automated system and can be retrieved according to user-specified criteria, e.g., subject, country, key words or phrases. In addition, a seven-digit control number is assigned, in sequential order, to each document. These techniques reduce the time required to retrieve records stored on the system and on microfilm (permanent storage medium).

- Accountability -- Each reviewing office in the (State) executive correspondence flow is responsibile for updating the correspondence record in the system. This technique enhances control over correspondence tracking and improves the accuracy of status reports generated.

These techniques have been incorporated into the ES correspondence control system as presented in Chapter IV -- system applications.

(2) Several Issues Need To Be Resolved To Determine the Potential Interconnection Possibilities Between AID Cable Operations and the Office Automation System

The Remote Automated Reproduction and Collating System (RARCS) is the (automated) cable system instituted by AID in March 1980. This system, designed and modeled after the State cable system, uses XEROX hardware and software to "process" cables between AID and State. In addition, AID plans to automate the distribution (assignment only, not delivery) of AID cables using XEROX software.

The potential to interconnect the AID cable system with the advanced word processing system envisioned in the study offices will require resolution of three technical and operational issues.

- Equipment compatibility -- the technical requirements and feasibility of establishing telecommunications linkages between the AID cable system (XEROX) and Wang office system would require further detailed analysis.

- Security -- cables categorized as classified are subject to State Department security criteria for determining distribution. This is a procedural barrier which could arise, depending upon the extent to which automation is used in cable preparation, distribution, and transmission.

- Authentication -- All AID cables must be initialed by an authorized sending organization. The Communications Center reviews each cable received to determine if it has been initialed by an authorized individual. Names of AID individuals authorized to send cables are maintained in the AID Communications Center. If the systems are connected, responsibility for this control measure would have to be resolved, e.g., responsibility could fall back to the originating office if the process were automated.

Until these issues are resolved by responsible AID officials, the office automation system envisioned in the study offices can be used to automate certain aspects of the cable communications process. As recommended in previous systems designed for AID bureaus and offices, cables can be produced on the advanced word processing equipment using the specified cable format created and stored in a word processing glossary on the system. These cables can be output to a printer using an OCR (optical character recognition) printing element, initialed, and delivered to the AID Communications Center for review and transmission. These (equipment) capabilities are discussed in detail in Chapter IV of this report.

(3) <u>Use of Non-Secured Advanced Word Processing Systems for Classified or LOU Documents Is Not Permitted Under Current Regulations</u>

Government-wide regulations prohibit use of non-secured word processing or computer systems for

the preparation and storage of classified documents. For a variety of reasons, including a limited volume of classified documents to be prepared and stored, and the inability to shield long stretches of connector cable, a secured (Tempest) system is not envisioned for ES/EXRL. Although the current volume of classified documents will continue to be prepared on manual typewriters, not all procedures involving classified documents must be excluded from the advanced word processing system. It is within regulations, for example, to store non-classified abstracts of classified documents on the system. Such summarization will be necessary for use on the OIS to control executive correspondence.

III. EQUIPMENT CONFIGURATION

III. EQUIPMENT CONFIGURATION

This chapters describes the office automation equipment configuration recommended for the Office of the Administrator, ES, EXRL, LEG and OPA and presents the office locations recommended for equipment placement.

1. AN ADVANCED WORD PROCESSING SYSTEM IS RECOMMENDED TO MEET THE OFFICES' AUTOMATION NEEDS BECAUSE OF ITS SUPERIOR CAPABILITIES AND CONVENIENCE, COMPARED WITH COMPUTERIZED APPROACHES

Based on analysis of the ES/EXRL office automation needs described in the previous chapter -- needs which include both word and records processing types of applications -- advanced word processing equipment is recommended as the basis of the ES/EXRL office system.

(1) An Advanced Word Processor Is Capable of Accomodating the Majority of Records Processing, As Well As the Word Processing, Work Load In the Offices

Advanced word processing equipment is recommended for the ES/EXRL study offices because it is capable of accommodating not only word processing work load, but also the majority of the records processing work load in these offices. Advanced word processing equipment is more sophisticated than the stand-alone word processing machines now in use in ES/EXRL offices and is capable of the types of information manipulation needed to automate most of the ES/EXRL ADP systems interests identified in Chapter II. Advanced equipment also has greater word processing capabilities than stand-alone word processors.

Thus, while the word and records processing applications in ES/EXRL could be performed on a computer-based office system, an advanced word processing system would meet the same requirements.

(2) Implementing A Word Processing-Based Automation Strategy Requires Significantly Less Acquisition Time and Maintenance Effort Than a Computer-Based Strategy

A second advantage of the recommended word processing-based office automation strategy is that equipment acquisition time and required maintenance effort will be, respectively, shorter and less complex. Procurement and installation of a word processing-based office system can be accomplished in nine to twelve months less time than is required for a computer-based system. This is due to more elaborate justification, ordering, and facilities modification requirements for computers. Operating and maintaining a computer-based system also requires a level of skill and effort beyond that required for word processing systems. The lack of significant data processing experience among the ES/EXRL offices is another factor that contributed to the word processing-based approach to ES/EXRL office automation.

2. AN OIS 140 MODEL III IS THE RECOMMENDED WORD PROCESSING SYSTEM FOR THE OFFICES UNDER STUDY

Within the Wang family of office automation equipment, which AID utilizes under an exclusive agreement, an OIS 140 Model III advanced word processing system is recommended for the ES/EXRL system. The OIS 140-III has the functional capabilities and storage capacity necessary to meet most of the ES/EXRL office automation needs.

(1) The OIS 140 System Has A Shared-Logic Design

The "shared-logic" design of the OIS 140 system refers to the system's organization. There is a central processing unit and central storage medium in the OIS 140 design, to which workstations and printers are connected. The shared-logic design has a number of advantages over the stand-alone word processors now used in ES/EXRL, including:

- On-line storage and access of information on the system, as contrasted with diskette-only storage and access of stand-alone word processors. (This obviates frequent input-output from-to diskette.)

- Multiple user access to the same set of on-line information. (This, too, obviates frequent input-output of diskette information.)

- Between-workstation communications.

- Other flexibilities over the stand-alone machines currently in use.

(2) <u>The Model III Will Provide The Necessary Storage Capacity For ES/EXRL Applications</u>

The largest OIS 140 disk capacity, the Model III, is recommended for the ES/EXRL system. The Model III has a capacity of 80.4 megabytes (million characters) of on-line storage. This is the equivalent of some 36,000 single-spaced pages of text. (The system will also have virtually limitless off-line storage capacity through use of "floppy" diskettes.)

Based on estimates of the ES/EXRL storage requirements, the study team believes the Model III system will provide a comfortable "cushion" of space to allow for any error in the estimates and growth in storage requirements. The storage needs categories and their estimated requirements are as follows:

- Word processing documents (e.g., CP tables, glossaries, frequently used documents and tables, form letters): 10,000 pages, or - 22 megabytes

- List processing files, processing workspace, software: 10 megabytes

- OIS software, system overhead: 10 megabytes

- Total estimated needs: 42 megabytes.

The total estimated need of 42 megabytes allows about 22 megabytes for growth and for error in the estimates. (The remaining 16 megabytes of capacity should not be utilized for storage, as the system's responsiveness is degraded when storage utilization exceeds 80 percent of capacity.)

(3) <u>If Work Load Outgrows the Capacity of the Word Processing System, There Are Three Alternatives Available to Handle the Overflow</u>

Although not likely to occur within the first year or so of operation, it is possible that increased use of the OIS will result in the need for additional storage capacity. This may be especially true if the

number of list processing applications grows, or the currently identified applications grow or become more demanding of the system. In this event, several alternative strategies will likely be available to accomodate the additional capacity requirements, including:

- Conversion of too-large or too-complex applications into computerized applications, to be operated on the Agency central computer or through a distributed processing arrangement

- Upgrading the word processing system to the next appropriate level--whether that be third-generation word processing equipment or a mini-computer

- Development of the smaller, new systems for micro-computer application.

This possibility should not concern ES/EXRL for the foreseeable future.

3. A TOTAL OF 13 WORKSTATIONS AND 8 PRINTERS IS RECOMMENDED TO MEET THE WORD AND DATA PROCESSING WORK LOAD

Workstations are the components of the system through which an operator keys in (types) documents and provides functional commands to the system. A workstation consists of a display screen (cathode ray tube) and a keyboard. Archiving workstations have an additional component that permits information to be copied for storage onto floppy diskette, and also permits entry of information into the OIS from diskette. Printers are devices that convert the stored electronic information on the system to typed copy. A total of 13 workstations and 8 printers is needed in the ES/EXRL system configuration to meet estimated work load requirements. Exhibit III-1, on the following page, presents the recommended allocation of equipment by office. The allocations were based on work load estimates and other considerations. The following sections describe the configuration within each office. Supporting documentation for determining equipment needs is contained in Appendix B.

(1) Offices of the Administrator, Deputy, and Counselor

For analysis purposes, these three "front" offices were considered together based on their physical

EXHIBIT III-1
Recommended Equipment Allocation
By Organizational Unit

OFFICE	ARCHIVING WORKSTATION	WORK STATION	DAISY PRINTER	TWIN SHEET FEEDER	WANG 5-3
A/AID	1	1	1	1	-
ES	2	2	2	2	-
EXRL	1	1	1	1	1
LEG	1	1	1	1	-
OPA	1	2	2	2	1
CPU ROOM	-	1	1	-	-
TOTAL	6	7	8	7	2

proximity and close working relationships. Two workstations and one printer were recommended for these offices.

One of the workstations, the archival unit, and a printer, should be located in the area of the Deputy Administrator's Office. The two secretarial staff stationed there would be the principal operators of this equipment, using it to produce memos, correspondence, and other documents. Additionally, the equipment will be used to log controlled correspondence into and out of the office.

A non-archiving workstation should be located in the reception area of the Administrator's and Counselor's offices. This machine will be used by the three secretarial staff situated there, for types of documents similar to these produced in the Deputy's office. Additionally, the workstation will be used for correspondence control logging and for the several list processing applications of the Administrator's Office. No printer is recommended, as the minor volume of printing associated with the work load here will be printed either on the Deputy's or ES's printers, located nearby.

(2) Executive Secretary

A total of four workstations and two printers is recommended for the ES staff. One archival and one regular workstation, and one printer, should be located in the outer office of the Executive Secretary. These machines will be shared among the three secretarial staff situated there. Documents to be produced include memos, correspondence, speeches, and papers. Considerable time will be spent operating the workstations for correspondence control, task assignment system input, and correspondence/task assignment weekly report generation.

The central processing unit and disk drive unit for the system should be located near the ES staff who will perform the system management duties.

The other archival and regular workstations and printer should be located in the Correspondence Control Section, principally for use in inputting correspondence briefs and making inquiries to the correspondence control files.

(3) External Relations

One archiving workstation and one printer should be located in the fifth floor EXRL offices. This equipment will be used for both word processing document production and list processing operations, although the latter is expected to constitute the larger work load.

The EXRL staff located on the third floor should be provided with the stand-alone Wang 5/3 word processor now used by the EXRL staff on the fifth floor. The third floor staff will not ordinarily need the shared-logic or advanced features of the OIS. When they do, they should arrange to use the fifth floor workstation. Use of the Wang 5/3 will provide flexibility, given the possibility of providing a workstation for the third floor staff. Once OIS cables are laid to a location, it is expensive and time consuming to re-lay them to accommodate an office move. The Wang 5/3 is easily portable.

(4) Office of Legislative Affairs

One archival and one regular workstation, and one printer should be located in LEG. The archival workstation and printer should be located where the Wang 5/3 is currently located, near the CLO staff. The regular workstation, at LEG's suggestion, should be located near the PD staff offices. Output from this workstation should be printed on the printer near the archival workstation. The front office of LEG would share the use of the regular workstation as the need arises.

(5) Office of Public Affairs

A total of three workstations and two printers is recommended for OPA. Locations for the equipment cannot be recommended at this time due to uncertainty over possible office space reconfiguration and movement of the second floor Public Inquiries staff to the fourth floor. Organizationally, the following primary assignment of equipment is recommended:

> Two workstations (one archival, one regular) and one printer should be located with the Publications Division.

- One regular workstation and one printer should be located to be accessible to both the news and media staff and the OPA front office.

- One Wang 5-3 stand-alone word processor should be located with the Public Inquiries Division staff. The work load in the division does not require OIS advanced functions, and the possibility of an office move suggests that a 5-3 is the most sensible choice.

The remaining workstation and printer should be located in the CPU room in order to serve as a system management control console.

The above discussion of equipment location implies a correspondence between organizational unit and equipment, which to some degree is intended. However, it must be emphasized that a given workstation or printer is not "owned" by an organization or individual operator. This approach, taken throughout AID/W, ensures adequate equipment utilization and minimizes the risk of excessive acquisition. Workstations should be located so as to be accessible to more than one operator. Although it is necessary to designate the primary workstation a given group of staff are to utilize, this designation should not preclude their use of other workstations if their primary one is unavailable. Disciplined scheduling is essential in this regard.

* * * * *

The ES/EXRL equipment configuration described above is intended to meet the current work load of the five offices involved. As work load may change, the equipment configuration may be added to or subtracted from. The recommended ES/EXRL equipment configuration can thus be viewed as an initial system. It should be periodically evaluated as to its adequacy given the current work load.

IV. SYSTEM APPLICATIONS

IV. SYSTEM APPLICATIONS

An important factor in determining the ultimate utility of an office automation system is the degree of understanding that office management, users, and equipment operators acquire about the system's capabilities. As has been pointed out by staff in the offices presently under study, the full utility of the stand-alone word processors currently in use has not been realized because few of the equipment operators understand how to use more than the equipment's basic text editing functions. Some of the applications that could have been performed on the current equipment have not been. Because the recommended OIS 140 system has more numerous and advanced capabilities than the current stand-alone word processors, to realize the system's full utility will require an even greater level of staff understanding.

The purpose of this chapter is to describe how the OIS 140 can be utilized to automate that portion of the offices' work load identified in Chapter II as suitable for word and records processing applications. The chapter begins with summaries of major OIS 140 capabilities and features. Descriptions are then presented of how these capabilities can be used to support textual document preparation (word processing) in the offices. Lastly, models are presented to show how the OIS 140 can be used to automate the (presently manual and semi-automated) records processing applications of the offices. These models, developed for a representative group of applications, will serve as the basis for further design and programming/documentation work necessary to implement the applications.

1. MAJOR OIS 140 CAPABILITIES AND FEATURES

The following numbered points summarize the major capabilities and features of the office system that will serve the Office of the Administrator, ES, EXRL, LEG, and OPA.

(1) Shared-Logic Design

This refers to the central, disk-based storage medium of the system, to which all peripherals (workstations, printers, and miscellaneous optional equipment) are connected. Thus, the documents stored on the system, as well as the system software (programs for the various OIS capabilities), can be accessed by

each workstation (depending upon the password organization specified by the users). Also, this design promotes sharing of equipment, for example, selective routing of output to any of the system's printers. The shared-logic design, in addition, makes interconnection of other OIS systems and computer resources possible.

(2) Document Storage

Storage can be on the central system disk and/or floppy diskette. The disk storage is "on-line", permitting rapid retrieval. On-line storage is organized by "libraries", which can be associated with organizational units. Document ID Numbers are the means by which a particular document is designated and "known" to the system and user. Documents reside in libraries on the disk, and individually on diskette.

(3) Powerful Editing

Powerful editing is the set of standard document preparation and revision features that permit text insertion and deletion, reorganization, margin change, search, global editing, spacing and tab changes, and automatic pagination. One principal advantage is that "correct" information in a document undergoing revision does not need to be rekeyed or proofread more than once.

(4) Glossaries

Glossaries are convenient means to store and retrieve keystrokes that are used frequently or repetitively. Glossaries can be used to store form letters and programmed instructions specifying formats and operator prompts. Cable formats are one example of a glossary application.

(5) Sort

Sorting is the capability to rearrange a list of information based on specified criteria, for example, to rearrange a list of names into alphabetical order. Both the word and list processing modes have a sort function, called "document sort" and simply, "sort", respectively. List processing's sort is the more powerful of the two, permitting more than one sort key to be used at a time.

(6) Document Merge

Merging is the capabilitly to create individual documents by combining standard (e.g., form letter) with variable (e.g., mailing list) information. Both sets of information to be merged may be stored on documents and combined through a single set of operator instructions.

(7) Mathematics Support

This is a package that permits operation of the four basic arithmetic functions (+, -, ÷, x) on rows and columns of numbers. This feature is useful for checking totals on revised tables, calculating proportions, and other simple applications.

(8) Security

Security features provide the abilitly to protect libraries/documents from unauthorized access through the use of passwords.

(9) List Processing

This capability will permit subsets of information to be created from a file of standard format records. One or more variables, or "fields", by which the records are classified can be specified in list processing as the basis for selecting the records desired in the subset. For example, from a file of all AID projects, whose fields include dollar amount of project and type of project, a subset could be created of all irrigation projects over $2 million. Although useful for this type of storage and selective retrieval application, list processing is not a general substitute for data processing. For example, relatively large applications are generally processed more slowly, and the data involved cannot be manipulated at the same level of complexity as with data processing.

Discussions of how these features should be applied to the study offices' document preparation processes are contained in the following section.

2. WORD PROCESSING APPLICATIONS

The word processing features of the OIS 140 will be useful to the study offices primarily for preparation of textual and tabular documents. As discussed earlier, the principal advantage of word processing is the ease with which documents can be revised, merged, or produced repetitively, as compared with standard typing. The types of

documents in the study offices appropriate for word processing application were listed in Chapter II and represent the majority of the total typing work load in the offices.

Currently, an estimated one-half to two-thirds of the word processing work load in the offices is being produced on eight stand-alone word processors (two of which are limited-display machines). With the increased capacity of the recommended OIS configuration, the total applicable work load in the offices can be automated. Apart from the capacity gain, the other benefits of the OIS will be enhanced quality and timeliness of document preparation as well as greater convenience due to the OIS advanced functions.

The following points identify the principal word processing functions or features that will be applied to the offices' work loads.

(1) Powerful Editing Will Facilitate Document Revision

Document creation and revision will be performed on the OIS in essentially the same way it is now performed on the stand-alone Wang 5-3 word processors used in the study offices. The OIS powerful editing features operate in much the same fashion as the 5-3 editing features. These permit a variety of revisions to be made to all or selected portions of text or tables by replacing, deleting, inserting, reformatting adding, or reorganizing their contents. These features can be used to revise documents created in the offices or in other bureaus/offices within AID that have access to Wang equipment.

An illustration of how the OIS should be used in document creation and revision is shown on Exhibit IV-1, on the next page. The exhibit indicates, in a flowchart format, how preparation of the Summary Volume of the Congressional Presentation (CP) can be accomplished by LEG with input from the bureaus. The following numbered points are keyed to the circled numbers in the flowchart.

1. For the Summary Volume of the CP, LEG drafts a considerable portion of the text and prepares some summary tables. The LEG draft material will be keyed into the OIS, into separate document ID numbers for each chapter of the volume. (Using separate word processing documents for each chapter of a report or large document achieves convenience. It allows revisions to be made to more

EXHIBIT IV-1

LEG -- Preparation of the Summary
Volume of the Congressional Presentation

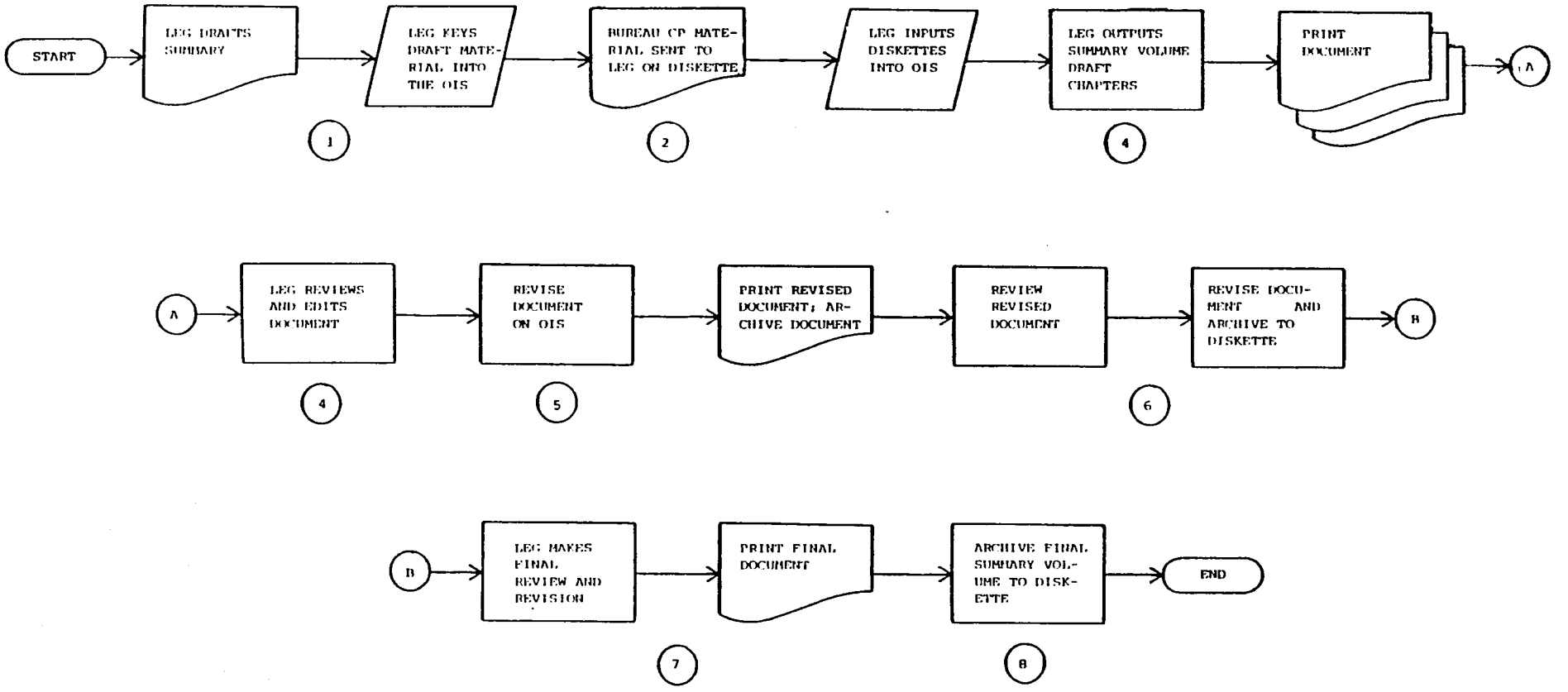

than one section of the volume at one time, and also minimizes reprinting of revised pages if not all chapters are affected during a given revision cycle.)

2. Although LEG drafts a considerable portion of the CP Summary Volume, the various AID bureaus also contribute text and tables. The second step shown on the flowchart is to receive the bureau material on diskette (all but the LAC bureau now have Wang equipment) and input it into the appropriate Summary Volume chapter that, from step 1 above, is already established on the OIS. Diskette transfer saves rekeying of the bureau material. LEG has utilized this feature in the past.

3. Next, LEG will print out all of the Summary Volume draft chapters. Because the chapters are stored in separate document ID numbers on the system, each document will have to be individually printed out.

4. Once the draft Summary Volume chapters have been printed and assembled, LEG will conduct its regular initial review and edit. Insertions, deletions, and other editing changes to be made are indicated directly on the hardcopy of the draft by professional staff in LEG. Reviewers may not "cut and paste" or otherwise obscure how the document contents are actually stored on the OIS. Deletions should have a simple line drawn through them; movement of a paragraph to another location in the document should be indicated by notes and/or arrows. (It is essential that the handmarked revised document reflect what is stored on the system, as well as the revisions to be made.)

5. The LEG OIS operator makes the revisions, as indicated on the hardcopy drafts, and prints out the revised document for distribution and further review. The operator should archive the CP chapters thus prepared onto diskette, as well as maintain them in on-line storage, as a back-up measure.

6. The review process iterates, involving markup of the hardcopy document and revision by the LEG OIS operator. These revisions typically involve changes to the dollar amounts in the budget tables as well as to the budget discussion in the text. After each revision has been made, the

updated versions of the chapters should be archived to diskette for back-up purposes.

7. After LEG has obtained final review and revision of the Summary Volume content, it makes the final revisions and prints out the final version for publication. (Note that revisions to the various other volumes of the CP will likely occur simultaneously with changes to the Summary Volume. (Near the end of the CP process, when the changes to the individual bureau volumes are fewer and less voluminous than at the start, LEG may well utilize a similar process as shown for the Summary Volume to make the changes rather than return the documents to the bureaus. Given the volume of changes in the early stages of the CP process, it is unlikely that LEG would have the staff resources to handle all of the changes by itself.)

8. The final step is for LEG to archive the Summary Volume of the CP onto diskette for permanent storage. (Because of the need to continue to revise tables and prepare information for committee hearings throughout the several months of the CP process, it will be useful for LEG to copy those sections of the CP volumes that will continue to be used into separate documents for online storage. Thus, when a change occurs, a revised table, etc., can be produced quickly and easily.)

Although the flow of IV-1 is fairly simple, it nonetheless is representative of the flows for the majority of the text and tabular work load in the study offices. Any number of the word processing applications identified in Chapter II would, if charted, appear similar to the CP flow presented above, including diskette input from other offices, multiple revisions, and archiving for backup and permanent storage.

(2) <u>Glossaries Will Facilitate The Use of Repetitive Keystrokes</u>

The glossary function will be advantageous for producing documents that have standard formats -- and thus, standard margins, tabs, headers, etc. -- and/or repetitive text or tables. The repetitious keystrokes that would be necessary on a standard typewriter can be obviated through glossary, which stores the keystrokes for recall.

An example of a glossary used for formatting purposes is a cable glossary, which promotes adherence to the rigorous margin and other format requirements for cable preparation. To produce a cable, the workstation operator "attaches" the cable glossary to his/her workstation, and keys in the required information, including:

- Sender
- Addressee
- Date
- Text of cable.

The glossary not only restricts the keyed information to the proper margins and spaces, it prompts the operator as to what information is required. To produce the hardcopy cable, cable forms are inserted into the OIS printer's paper feed and an OCR (optical character readable) printing element is substituted for the regular print wheel. After use, the cable glossary is returned to the glossary library.

Other glossary applications identified during the study include:

- Memos, correspondence, and other formatted textual documents
- Statistical table formats
- Standard text correspondence
  - Contract award notification letters (LEG)
  - Miscellaneous "cover" memos (most offices)
  - Responses to general inquiries (OPA).

(3) <u>Document Merge Functions Will Facilitate Document Revision and Standard Correspondence Production</u>

OIS functions that permit the merging of two or more documents into one document will be useful to the offices for several applications. Primarily, these will be applications in which the offices are compiling documents or portions of documents prepared separately into a single final document, and applications in which a standard letter must be individually typed to a distribution list of addresses.

As exemplified by the CP application described earlier, document preparation in the study offices at times involves compilation of material drafted in other bureaus. In such instances, the OIS document merge function will be used to merge the text of the various documents involved. Upon merger, the several documents will be in a single new word processing document contained in the OIS. The integration of text from the component documents (rearranging, insertion, deletion, etc.) can then be accomplished using the powerful editing and other OIS word processing functions.

For other types of merge applications, it may not be necessary or desireable to create an entirely new document. For example, to produce, periodically, letters to the same addressees all having the same text but with individually typed address blocks and salutations, it is advantageous to use the merge-print function. With this function, a standard letter, for example a co er letter accompanying an AID publication, could be merged with a variable set of information -- a mailing list -- to automatically produce an individually typed, personalized letter. The merge-print function electronically merges the address and salutation information with the standard letter body at the printer, rather than in a separately created document, as in the earlier document merge example. When the letter production process is completed, the mailing list is intact and unchanged and can be used again.

The applications for which merge-print would be appropriate include all mass mailing applications to stable lists of addresses. Such applications are currently in (manual) operation OPA, EXRL, and LEG. Some of these mailings are currently produced with support of Wang 5-3s, but do not utilize the automatic merge-print function; rather, the address block and salutation are manually inserted into the standard letter body. The mailing application of merge-print can utilize lists contained on either word processing documents (as some offices now have) or list processing files (such as those contemplated by some offices). Using a list processing file, the first step of a mailing would be to select the intended addresses from the master file of addresses via subject or other code associated with each addressee listed. The merge print function would then be performed with the selected addresses.

In order to convert for merge-print use the address lists that some of the offices now store on their Wang diskettes, two steps must be completed:

- Standardize Lists -- The address blocks of the mailing lists must be made uniform as to number of lines, etc., so that their format does not vary.

- Indicate Merge Codes -- Second, merge codes, which indicate to the OIS where and how to merge the addresses into other documents, must be coded into the mailing lists. (This can be done via a one-time, global insertion function for large lists where individual insertion would be time consuming.)

The mechanics of performing the various word processing functions on the OIS are more involved than described here, and as such will require training and further thought on the part of the offices. The possible applications described above are only intended to point out the various utilities of the OIS, not to serve as an instruction manual.

3. SIX MODELS OF LIST PROCESSING APPLICATIONS HAVE BEEN DEVELOPED TO ILLUSTRATE HOW THE OIS CAN SUPPORT THE OFFICES' RECORD PROCESSING INTERESTS

In Chapter II and Appendix A, sixteen "ADP" or records processing concepts were identified that the offices have an interest in developing. These applications are currently either "manually" performed or are purely conceptual. Fourteen of these applications were determined to be suitable for the OIS with the other two requiring the support of computer resources. In this section, seven of the fourteen applications are described in flowchart and narrative form in order to model how the OIS would be used to automate them. The structure and function of the automated processing reflected in the model applications are representative of all fourteen. The models described are among the highest priority of the sixteen applications, from both the offices' and Booz, Allen's perspectives. Thus, they will serve as the basis for the detailed design and implementation work required to automate the systems. The applications selected for modelling include:

- ES -- Executive Correspondence Control and Tasking Systems

- A/AID, ES -- Meetings System

- A/AID, ES -- Reception Invitations System

- EXRL -- External Groups System

- EXRL -- Conferences Attended

- LEG -- Telephone Inquiries System.

The format of the description for each model includes sections on the:

- Purpose of the application and its current state of development

- Model of how the application would be automated using the OIS

- Summary of the major development tasks needed to implement the application. (A discussion of system development and implementation in general, and the estimated level of effort required to implement these priority applications, is included in Chapter VI, Implementation Plan.)

4. ES -- EXECUTIVE CORRESPONDENCE CONTROL AND TASK ASSIGNMENT SYSTEM

As is the case in most large government agencies, the AID executive correspondence control (CCS) system is one of several key tools used by top management to conduct the day-to-day business of the Agency. The AID correspondence system serves a number of related purposes for the Administrator, including:

- Controlling, in large part, the written communications the Administrator sees from sources outside and inside the Agency.

- Tracking the assignment and completion of responses to incoming correspondence and other communications prepared for the Administrator.

- Responding to inquiries from the Administrator or AID staff about particular items or general types of archived correspondence.

In addition to the CCS, another key management tool relied upon by the Administrator is the task assignment system, which is also operated by the Executive Secretary staff. The purpose of this system is to record the assignment and track the completion of tasks assigned by the Administrator to AID bureaus and offices. Most tasks require the preparation of written material, either briefing memos or correspondence; other tasks require non-written

action, such as a follow-up phone call to provide additional information to an official who recently met with the Administrator.

(1) Current CCS and Tasking System Operations

The current CCS operation controls executive correspondence in two major respects: (1) determining the appropriate disposition of incoming or internal correspondence directed toward the Administrator, and (2) tracking the status of the correspondence as Agency components prepare responses or other documents for management, and as top management reviews, signs, or otherwise makes use of the material prepared. The following example describes the control process for a typical piece of incoming correspondence addressed to the Administrator that requires a written reply.

After being sorted and delivered through the AID mailroom and the Executive Secretary mailroom, the incoming correspondence is reviewed by a correspondence analyst in ES. The analyst makes several determinations, including:

- Which AID component should be assigned to prepare the response
- Which components should clear the response
- Which components should receive info copies of the incoming letter
- Due date of response
- Other particular instructions for the component assigned to respond.

These decisions are noted on an action assignment form which is then transmitted along with the incoming correspondence to a staff assistant.

The staff assistant is responsible for completing a four-part correspondence control form ("brief") for each piece of correspondence, which contains some 15 information items, including:

- Name and address of correspondent
- Date of letter
- Date received
- AID addressee
- Subject of letter
- Abstract of letter (one paragraph)

- Action office
- Due date
- Clearances required
- (Misc. other items)

After this brief is typed by the assistant (on a standard typewriter) the four parts of the form are filed and the correspondence is sent for reproduction and distribution.

The parts of the brief are filed in several different places, including in a master file of all briefs completed and in a suspense file that is organized by due date of the (action bureau's) response. These files serve as the basis for tracking the status of the correspondence as it is being responded to by the action office, and as the basis for searches to identify the control number or other characteristic about an item that may be the subject of an inquiry by the Administrator.

When the action office's response is received, the analyst reviews it for content, format, clearances, etc. After the response has been approved, it is given to the assistant who updates the brief to reflect receipt from the action office. The assistant then prepares a correspondence folder, which contains the response, for transmittal to and signature by the Administrator.

En route to the Administrator, the correspondence folder is reviewed by one or more of the following:

- Correspondence Control Supervisor
- Executive Secretary and/or deputy
- AID Counsellor
- AID Deputy Administrator
- Special assistants.

Currently, as correspondence folders are routed among these stations, a manual log is kept by each office to record the folders' movements. These logs are the basis for locating documents and determining their status through the front-office review points.

After the Agency's response, to the incoming correspondence, is signed by the Administrator, it proceeds back down to the correspondence control staff through essentially the same review points as on the route up. The same control logs are also used to record the correspondence status on the return path. When the folder eventually returns to the CCS staff,

the signed correspondence is reproduced, distributed, and dispatched to the addressee. The assistant notes the signature date and any comments on the brief, and files a copy of the signed letter with the incoming original. The brief copies are also permanently filed at this time.

(Although the process described above depicts the flow for incoming correspondence, it also applies to material sent to the Administrator originating from sources inside AID, except that there is usually no due date and tracking involved. Variations of the flow may also occur, mainly consisting of iterations caused by an insufficient action office reply, special clearance routing, etc.)

The operation of the task assignment system overlaps considerably with correspondence control operations because the majority of tasks assigned by the Administrator involve preparing a written product for the Administrator's review and/or signature. The ES staff receives instructions from the Administrator to assign tasks. ES prepares a short task memo instructing the action office (usually identified by the Administrator or otherwise easily determined by the task subject) and assigns a due date. The task is summarized and entered into Wang 5-3 word processor as a means of recordkeeping and eventual status reporting. A copy of the task is sent to the CCS staff, which "briefs" the task and files the brief in its suspense file, just as for incoming correspondence. CCS is thus responsible for tracking the response and preparing it for front office review when received. In essence, the majority of task responses become "correspondence" items for CCS purposes.

The tasks that do not involve written responses are tracked by ES, which also tracks the tasks involving written response (duplicating the work of CCS). ES reviews the information stored on the Wang 5-3 and, as required, follows up with the action office assigned.

The reports prepared weekly on correspondence control and task assignment status are based on manual compilations of information in the CCS brief files, correspondence logs, and task summaries stored on the Wang 5-3 in ES. The reports indicate the items that are:

- Overdue from action offices
- Due in the next week
- Completed as of the present week.

The items included on these reports are organized by AID components. The reports are distributed to all components and are intended to remind and alert the components of their correspondence/task assignments.

(2) Expected Benefits of Automation

Currently, the correspondence and task assignment systems are operated separately from one another for the most part. However, because of the overlap between them and a desire to merge the reports generated from them, it is intended that these systems be integrated with one another through the use of automation. This would improve report generation efficiency and readability.

Apart from correspondence and task assignment system integration, there are other goals or anticipated benefits to be achieved through automation:

- CCS -- Simplify recordkeeping -- It is expected that the currently voluminous amounts of paper involved in manually controlling correspondence will be reduced through electronic storage and retrieval.

- CCS -- Simplify reporting -- Automation is expected to simplify and make more efficient the production of the weekly correspondence status reports, which now involve tedious manual compilation and analysis of information kept in the manual files maintained by correspondence analysts. Ad hoc inquiries about correspondence status would, likewise, be improved.

- CCS -- Enhance archival searches -- It is expected that electronic storage of summaries of correspondence handled in the past and now archived will be enhanced, resulting in more thorough and efficient retrieval. For example, a request to see all correspondence on a particular subject from a particular correspondent during a particular time period would now involve considerable search time. It is expected that OIS list processing will make this process easier, overall.

- Tasking System -- Simplify report preparation -- Electronic storage of tasks assigned by the Administrator is expected to yield similar benefits as those anticipated for

the correspondence system. In particular, report preparation is expected to be simplified.

(3) Conceptual Design for an Automated Correspondence Control and Task Assignment System

The recommended strategy for the combined CCS and task assignment system is to automate three aspects of their current manual operation, including the:

- Correspondence briefs
- Correspondence control logs
- Report preparation procedures.

In addition to these three aspects, automated support is recommended for the permanent archiving and document retrieval aspect of correspondence control. Exhibit IV-2, beginning on the following page, illustrates in flowchart format how automation would support correspondence control operations for incoming correspondence, under the recommended strategy. Additional flowcharts, presented later, describe how automation would support the task assignment and reporting portions of the overall system. The following numbered paragraphs describe the operations represented on the flowchart in Exhibit IV-2.

1. The flowchart represents activities from the point that the ES mailroom receives correspondence addressed to the Administrator. Under the automated system, the mailroom functions would not change. It would continue to open, date and time stamp, and assign a document control number to each piece of correspondence before transmitting it to a correspondence analyst.

2. As in the current system, the correspondence analyst reviews each piece of correspondence. This review is conducted to determine the distribution/action required, action office, and establish a due date if a response is required. The analyst, then, manually prepares an action assignment form, which, along with the correspondence, is transmitted to the assistant. The action assignment form provides guidance to the assistant for completing the correspondence "brief" and reproduction/distribution requirements.

EXHIBIT IV-2
Correspondence Control Operations
-- Incoming Correspondence

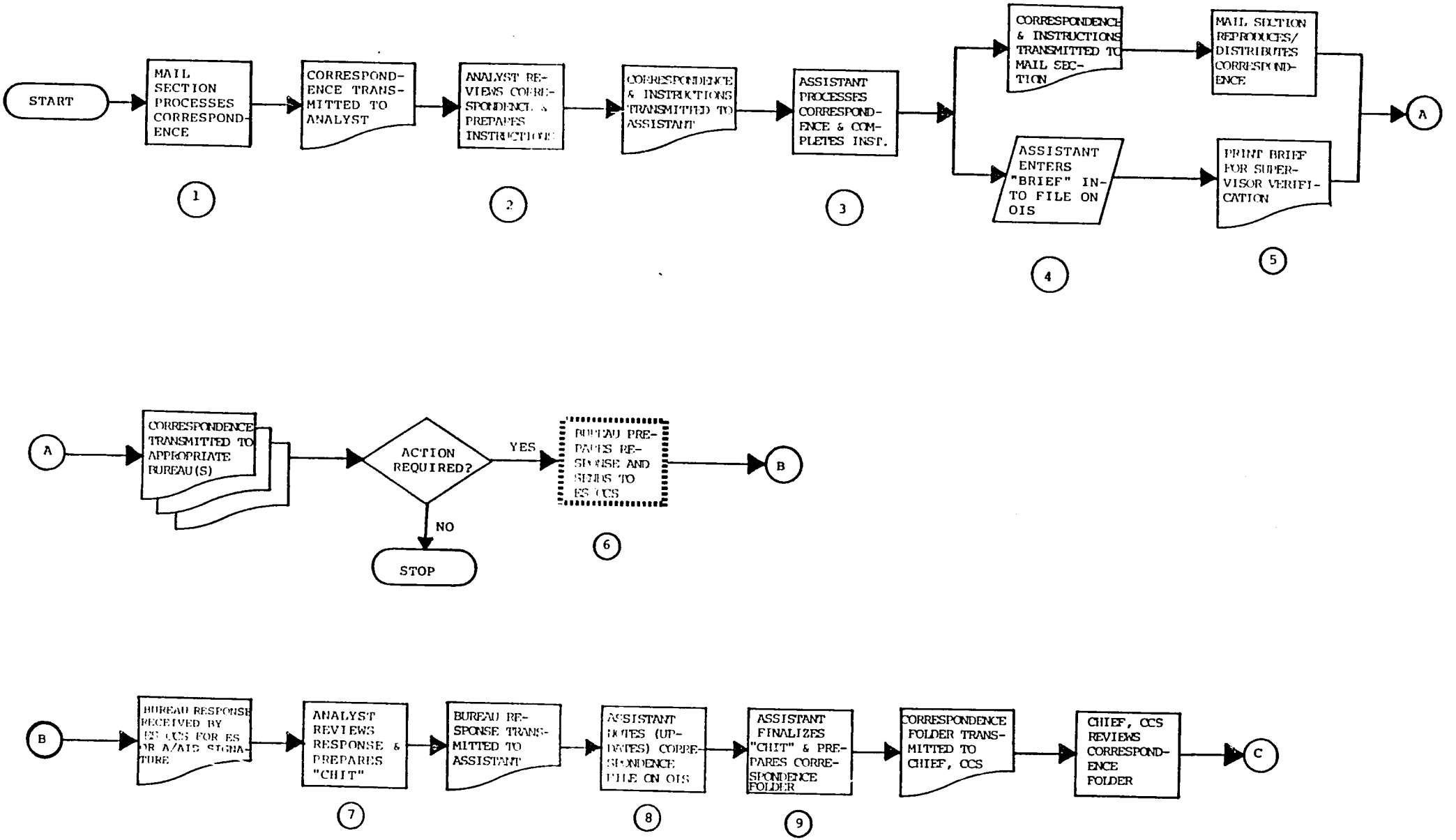

EXHIBIT IV-2(2)
Correspondence Control Operations
-- Incoming Correspondence

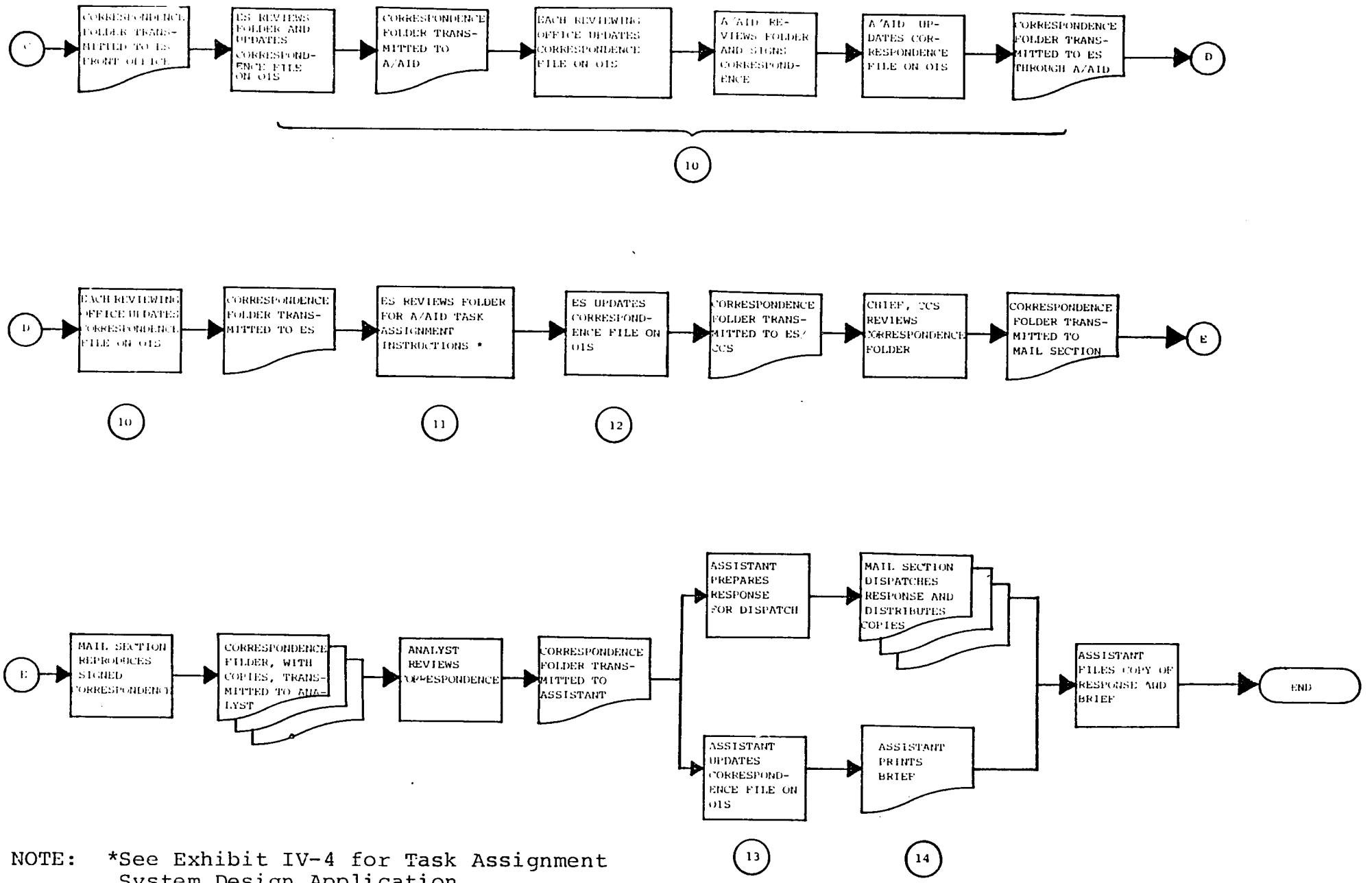

NOTE: *See Exhibit IV-4 for Task Assignment System Design Application

3. For each piece of correspondence received, the assistant currently "slugs" the correspondence, completes the reproduction/distribution instructions on the action assignment form and manually prepares transmittal slips, as required. This process would not change under the automated system.

4. Under the automated system, the "brief" prepared for each piece of correspondence would no longer be manually produced. The information contained on this "brief" form would, instead, be keyed into the appropriate correspondence file created and stored on the OIS. Each piece of correspondence received would represent a new record established in the file. The format for each record stored on the system would contain the same data elements as currently included on the hard copy brief. New data fields for each record will need to be established and updated in order to automate the tracking and controlling functions of the front office logs. (A preliminary list of all needed data fields is presented in Exhibit IV-3, on the following page.)

5. Verification of the data entered into the file is necessary to ensure its accuracy and completeness. This is critical to the success and timeliness of subsequent tracking, search, and retrieval activities. The supervisory verification process is performed by the analyst, after the record is added, by visually comparing the recorded information placed in the file with a copy of the correspondence and related notes previously prepared. This requires the operator to output, via the printer, a copy of each new record added. (An initial quality control check can also be accomplished by the assistant through visual examination of the information displayed on the workstation screen as the record is added to the file.) Once the verification process is complete, the analyst can dispose of the hard copy of the brief or place it in a working file. It is recommended that this verification process be continued for at least six months or until the operator has achieved a satisfactory level of performance in operating the equipment.

6. If a written response to the correspondence is required, the action office will prepare it and obtain all necessary clearances before submitting the response to ES/CCS. This process will not change under the automated system.

EXHIBIT IV-3
Preliminary List of Data Elements
For the Correspondence Control System

The following list of data items represent the preliminary set of data fields to be formatted for each record created and stored in the controlled correspondence file(s) on the OIS. These data items are similar to those currently included on the (manually prepared) correspondence brief completed for each piece of controlled correspondence processed by CCS. Additional data fields are identified to allow for automated tracking of the correspondence, by CCS, as it transmitted through each reviewing office in the controlled correspondence flow. The data elements will be finalized and documented during the detailed design and implementation stage of this application.

1. Document Control Number (A, B, C)

    - Incoming correspondence (A)
    - Outgoing correspondence (B)
    - Internal correspondence (C)

2. Identification of Writer (A)

    - Name
    - Title
    - Organization
    - Street Address
    - City
    - State
    - ZIP Code
    - Country

3. AID Addressee (A)

4. Date of Letter (A)

5. Drafting Organization and Officer (B)

6. Signature (B)

7. Addressee(s) (B, C)

8. Document Originating Office (C)

9. Document Drafting Office (C)

10. Date of Memo (C)

11. Date Received by ES (A, B, C)

12. Due Date of Response (A, C)

13. Action Office (A)

14. Action Required (A)

15. Coordinating Office(s) (A)

16. Coordination Required (A)

17. Clearances Required (A, B, C)

18. File Subject Code (A, B, C)

19. Summary (A, B, C)

20. Date Received from Action Office (A)

21. Date Forwarded by CCS (A, B, C)

22. Received by Reviewing Office (A, B, C)

    - Date
    - Office Symbol

23. Forwarded to (A, B, C)

    - Date
    - Office Symbol

24. Date of Signature (A, B)

25. Date of Decision (C)

26. Disposition (C)

27. Date Returned to CCS (A, B, C)

28. Distribution (A, B, C)

29. Comments (A, B, C)

Note: Each type of controlled corespondence, such as incoming or outgoing, has both similar and unique data elements associated with it which must be completed when the correspondence record is created in the appropriate correspondence file on the OIS and as it is tracked through the controlled correspondence flow. The letters (A, B, C) next to each data element indicates the type(s) of controlled correspondence to which it is applicable.

7. As is currently done, the correspondence analyst reviews the response prepared by the action office. A draft "chit" is prepared, which includes a summary of the response, and is sent, with the reply, to the assistant analyst.

8. Upon receipt of the reply and draft chit from the correspondence analyst, the assistant updates the record in the file established on the OIS. This process is similar to the current process except that the brief and updated information is stored and made on the record in the file. After accessing the appropriate file and specifying the search criteria (usually the document control number which is assigned to the incoming correspondence) the required status information is entered into the appropriate data field(s) on the record selected.

9. After the update process is complete, the assistant will finalize the chit and prepare the correspondence folder for A/AID review and signature. The contents of this folder as well as the current procedures associated with the "in for signature" folder (retained by the assistant) would not be affected by the system. After assembling the folder and updating the correspondence record on the OIS, the assistant will forward the folder to the CCS supervisor for review.

10. Under the current correspondence control system, each reviewing office (which includes the Deputy and Executive Secretary, special assistants, and Counsellor and Deputy Administrator) manually records the receipt and transmittal of correspondence received in a communications log. Automating this system will not change the flow of correspondence but will eliminate the need to manually maintain this log. In this application, each reviewing office will update the "brief" record stored in the file on the OIS. The update will entail entering the status information in the appropriate data field(s) for each record. This information will allow ES/CCS and or any other responsible individual to track the status and location of the correspondence as it goes through the review and signature process. (This is a critical step in the process described because of the tracking and reporting implications involved. Each reviewing office must accurately and promptly update the appropriate record(s) to ensure that ES/CCS tracking is effectively controlled and accurately reported.) Automating the

tracking process will reduce the time required to control and track the correspondence.

11. Under the current and automated correspondence control system, ES reviews each correspondence folder returned from A/AID. This review includes the identification of notes/comments from the Administrator which form the basis of the taskers prepared and assigned, by ES, to the bureaus for follow-up and response. This task assignment process is presented in Exhibit IV-3 and discussed in the accompanying text.

12. Prior to transmitting the correspondence folder to ES/CCS for dispatch and final "brief" update, ES will update the record on the OIS. This is the same process described previously in Step 10 of the flowchart, intended to indicate that the folder has been returned to ES/CCS.

13. When the signed correspondence folder reaches the assistant, several steps would be performed concurrently. As is currently done, the assistant will prepare the signed correspondence for dispatch. In addition, close-out of the correspondence record on the OIS will occur. This process, as described in Step 10, will include entering in the appropriate data field(s), the date the signed response was dispatched and, as appropriate, any comments.

14. After the brief is updated for the final time (i.e., closed-out), the assistant will print it out. The printed brief will then be filed along with a copy of the signed correspondence and the original incoming letter in the CCS permanent files.

(4) Conceptual Design for an Automated Task Assignment System

As discussed in the previous section, task assignment is an outgrowth of the correspondence flow from the Office of the Administrator to ES. This is illustrated and briefly described in Exhibit IV-2, Step 11.

Exhibit IV-4, on the following page, illustrates in flowchart format how automation will support task assignment under the recommended strategy of a combined correspondence control and task assignment system. The following numbered paragraphs describe the operations represented on the flowchart in Exhibit IV-4.

EXHIBIT IV-4
Task Assignment System

INPUT/UPDATE

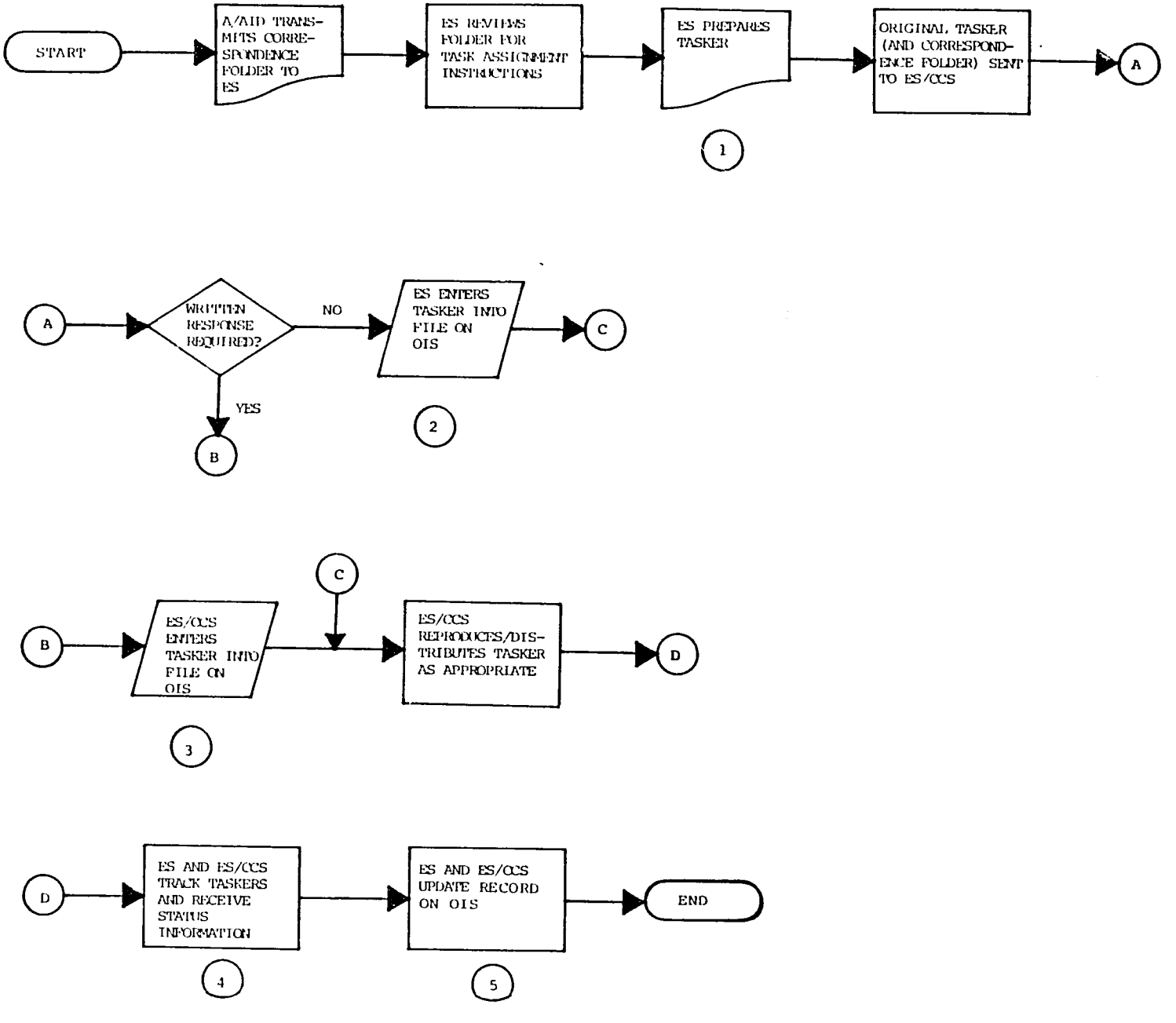

1. After the signed correspondence folder has been returned to ES from A/AID, it is reviewed to identify notes/comments from the Administrator. These notes/comments typically result in the preparation and assignment of tasks which must be completed by the bureaus. Under the automated system, the manual process for preparing the "tasker" would not change.

2. If no written response is required to complete the task assigned, ES would be responsible for entering the task record into the file created and stored on the OIS. As is currently done on the Wang 5-3, ES would input the appropriate information into the data fields formatted for each record in the file. This would include the action office, task assignment description, due date, clearances required and status/disposition. The process for creating a new record on the OIS is the same as that described in Step 4 of Exhibit IV-2.

3. The majority of the taskers assigned by ES, to the bureaus require a written response, e.g., correspondence, internal memorandum, report, etc. In this instance, ES/CCS would be responsible for entering the task assignment information into the record on the OIS. (This would be evident from a notation made on the tasker prepared by and transmitted from ES.) Each record entered into the file by ES/CCS would contain the same data fields formatted and completed by ES in its tasker file. As indicated in Step 2 of this flowchart, the same process for creating a new record on the OIS (reference Exhibit IV-2, Step 4) would apply.

4. ES and ES/CCS would both be responsible for tracking the status of their respective taskers assigned to the bureaus. The current methods for tracking taskers would not change under the automated system and include:

- Reference to previous hard copy reports generated
- Conduct of file searches to determine tasker status
- Telephone query to action office

- Telephone notation from the action office

- Review of documents received.

5. As this tracking information is received, the appropriate record(s) established in the file(s) would be updated. This would include keying in the status information into the appropriate data field(s) established for each record. This update process is the same as that previously described in steps 8, 10, 12 and 13 of Exhibit IV-2.

(5) Conceptual Design for Correspondence Control and Task Assignment Reporting

Under the recommended strategy for a combined correspondence control and task assignment system, automated report generation activities are consolidated. This represents a slight variation to current reporting procedures for both controlled correspondence and taskers. The current manual reporting procedures for controlled correspondence would be eliminated and production of the correspondence report would be incorporated (as currently) with the task assignment reporting procedures.

Exhibit IV-5 on the following page illustrates the general operation for generating reports and handling special inquiries for the correspondence control and task assignment system. The flowchart assumes the data base has been developed and is on an OIS storage medium (disk or diskette). The following description of the major steps of system operation are keyed to the flowchart.

1. On a weekly basis, ES would produce the task assignment and suspense and alert report. This combined report would include overdue, upcoming and completed items which are currently reported in the individual reports. To accomplish this step, list processing specifications need to be written to generate the report data. These specifications include the criteria established to search and select records from both the correspondence and tasker files. Having specified the criteria, the operator would execute the list processing function to identify the records in the files meeting the criteria established. The nature of the search would be determined by the correspondence and task file structures to be

EXHIBIT IV-5
Report Generation and Special
Inquiries for Correspondence
Control and Task Assignment System

TASK ASSIGNMENT AND SUSPENSE
AND ALERT REPORT (WEEKLY)

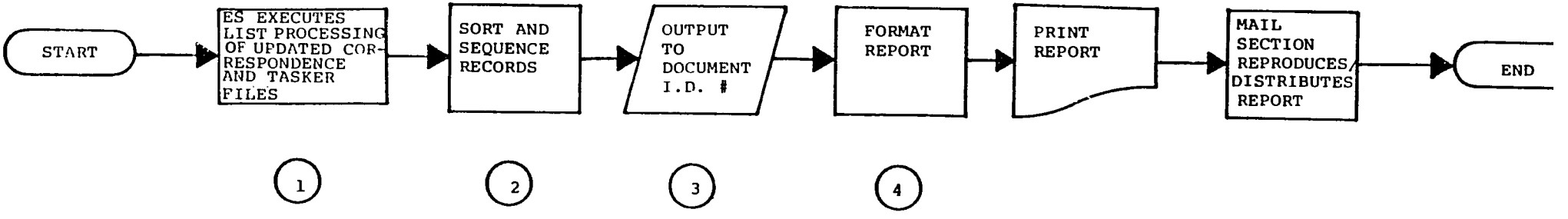

SPECIAL INQUIRY AND AD HOC REPORTS

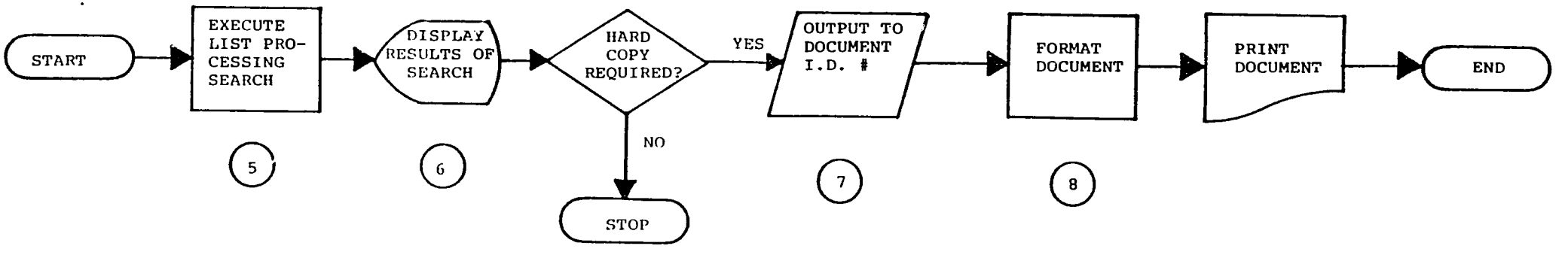

determined during the detailed design and implementation stage of this application.

2. When the search has been completed, the records selected can be arranged in the particular order required. This is done through the list processing Sort, which arranges the selected records within the list processing file. The order of the sort is designated by the operator and can include a chronological sort of the records selected, organized by Bureau.

3. The records selected/sorted and the specified date fields would be output to a word processing document. This document is stored electronically on the OIS and contains all the selected records in the sort format. This, then, allows the operator to manipulate (edit) the records output (which is described in step 4 of this flowchart), as required, without altering the master file(s). The document ID facilitates access and retrieval of the selected/sorted records for the report generation process.

4. Formatting the document allows the operator to edit the records output. This would include adding headers, inserting tabs, changing margins and or spacing and any other word processing functions available on the system to meet report requirements. For regularly produced reports, this format can be stored in a glossary on the system and attached to the report each time it is generated. Once the format instructions are completed, the records can be output (hard copy) to the printer.

5. Ad hoc reports to be generated from the correspondence and or tasker files will be based on special inquiries. These inquiries will provide the basis for initially determining the search criteria to select the records required. Multiple search criteria may be used as well. This process represents the same approach to be used by either ES or ES/CCS in tracking correspondence and taskers as they are processed through their respective flows. For example, if ES/CCS wanted to determine the status of selected correspondence transmitted to the Office of the Administrator, criteria would have to be specified for each file containing these records. The search criteria might include all correspondence transmitted to A/AID as of a particular date, dealing

with a particular subject matter and/or prepared by one or more of the bureaus. The number of search criteria specified will in part be driven by the amount and quality of information provided to conduct the inquiry as well as the nature of the inquiry itself and file structure(s) developed. The search would then, be conducted within the data field(s) specified for all records contained in the file(s) accessed. Having specified the criteria, the operator would execute the list processing application to select those records meeting the criteria specified.

6. When the list processing search has been completed, the operator may select the desired output format. This includes displayng the selected records on the terminal screen. This allows the operator to visually observe and compare the record(s) selected against the search criteria specified. Unless otherwise specified, each record selected would contain all field values formatted in the file(s) queried.

7-8. If a hard copy of the selected records is required, the operator can output these records and the specified data fields to a word processing document. This process is the same as that described previously in Steps 3 and 4 of this flowchart. However, for most special inquires or ad hoc reports, the format for organizing, arranging the document would not typically preexist (new format instructions would have to be specified each time a special inquiry is conducted or an ad hoc report produced).

(6) <u>Considerable Development Work is Needed to Implement This Application</u>

Although selected aspects of this system are currently automated, e.g., task assignment reporting, the integration and automation of the correspondence control and task assignment system will require a significant investment of time and effort to implement. This will include:

- Clarifying system objectives which will identify operational similarities/differences between the two systems

- Redefining report needs to incorporate modifications to current reporting formats and objectives

- Defining and finalizing data fields of the records and file structures to be developed for both controlled correspondence and taskers

- Developing file maintenance and storage procedures for those records on the system as well as those archived to diskette

- Developing list processing specifications for repetitive and standardized search and retrieval requirements, e.g., weekly reports

- Establishing the initial file(s) of information which includes the file structures and record formats for both controlled correspondence and taskers.

The effective transition of these systems from their current operation to an automated state requires considerable planning. To minimize potential problems in the systems' performance while maintaining current responsiveness to top management's needs, an incremental approach to the development and implementation of this application is envisioned. Through careful staging (e.g., by bureau) and coordination of the conversion process, an orderly transition can be achieved. Consequently, as this process is carried out, it may be necessary to run parallel systems until a satisfactory level of system responsiveness and operator performance is achieved.

5. A/AID -- MEETINGS

A/AID "Meetings" is a manual system currently used to provide a summary record of highlights of previous meetings held by the Administrator. It requires a manual search of logs and records maintained in A/AID, on an as-needed basis, to produce a listing of the meetings information required. At present, no systematic approach is used to record meetings data. However, the meetings' records that currently exist require minimal update and do not involve complex manipulations to generate reports.

Automating this system on the OIS will require a structured and systemmatic approach to the recordation, collection, processing, storage and retrieval of meetings' information. Initially, it will facilitate the development of a comprehensive and consistent (in format) data base for analytical and reporting needs. This data base could reduce subsequent search and retrieval effort required to produce reports or respond to special inquiries.

The flowchart in Exhibit IV-6 illustrates the general operation of A/AID's "Meetings" system. It represents a hypothetical design for this application in that the current manual system does not include the steps depicted in the chart. The chart summarizes the general steps for maintaining the system and generating ad hoc reports. The flowchart assumes the data base (meetings held by the Administrator during the fiscal year) has been developed and is on an OIS storge medium (disk or diskette).

The purpose of the system is to provide a record of meetings held by the Administrator in performing official duties. Included in this record would be pertinent information about the meetings such as topics discussed and participants. All reports would be generated through specific inquiries, however, they would provide similar types of data in a standard format. These reports would be produced an average of one time per week and include a listing of all meetings satisfying the criteria specified, e.g., all meetings in the past six months regarding Honduras. This would include any other meeting information such as location and date of meeting and personal notes, all of which would be maintained in the data base established.

The following description of the major steps of system operation, as described by A/AID and adapted by the study team, are keyed to the flowchart.

1. After each meeting (domestic and overseas) held by the Administrator, A/AID staff would complete a meetings form. This hard-copy form does not currently exist and would need to be designed. The format of the form should be consistent with the file structure to streamline file maintenance requirements. It is envisioned that the form would provide for the following information to be recorded:

- Date of meeting
- Location
  - City, State (domestic) or
  - City, Country (overseas)
- Topic of meeting
  - Geographical region(s) discussed
  - Specific country(s) involved

Exhibit IV-6
A/AID -- Meetings

INPUT NEW RECORDS

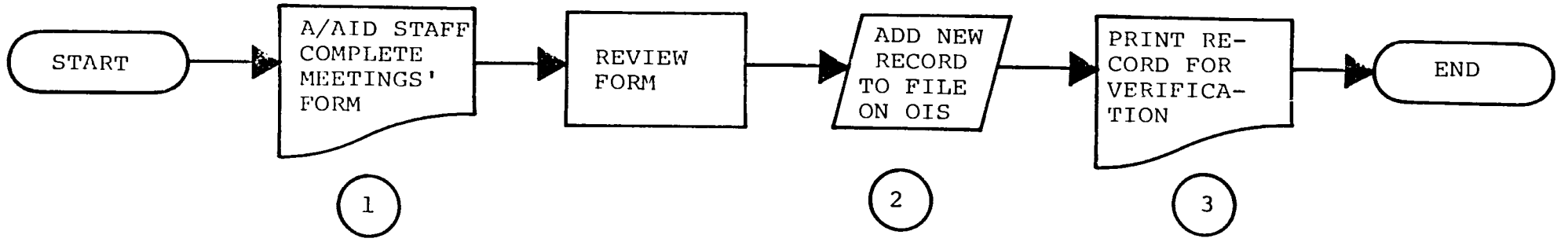

SPECIAL INQUIRIES

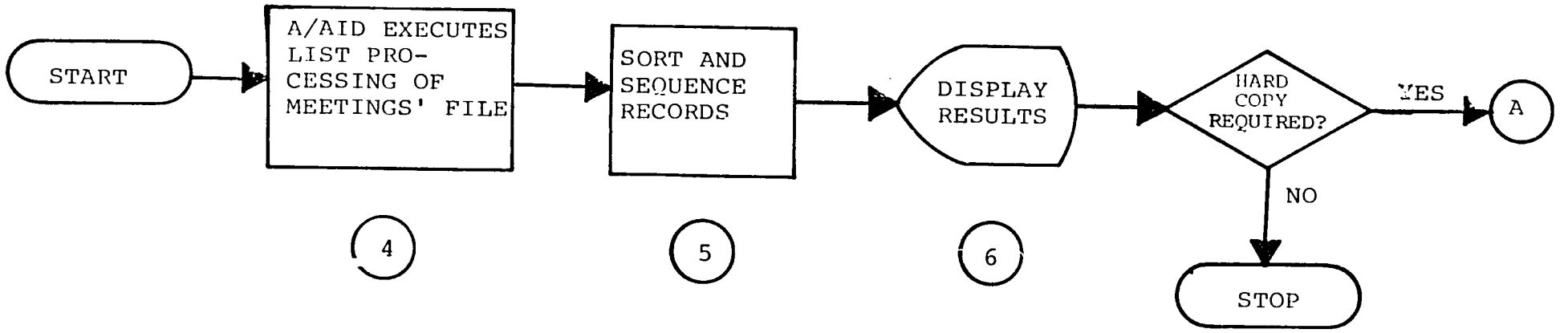

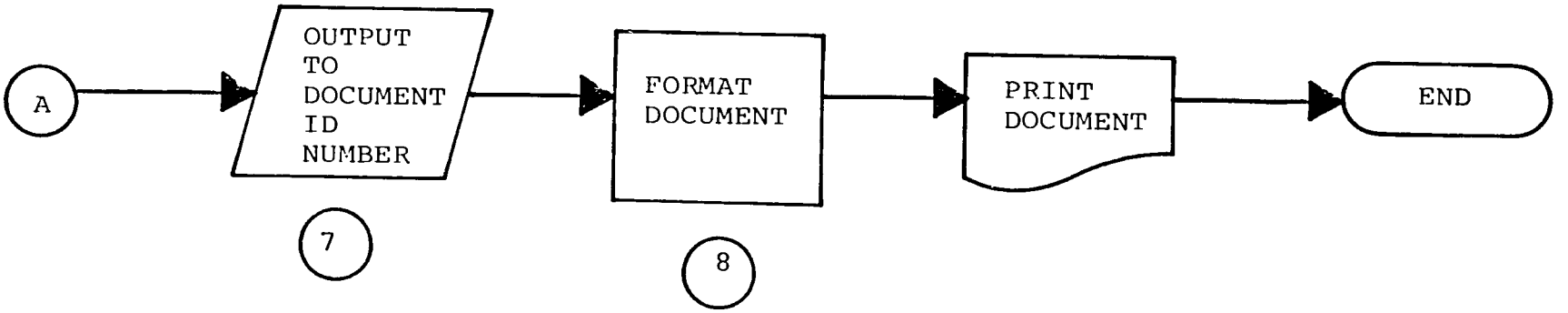

- Area(s) of interest/concern discussed

- Name and title/organization of individual(s) in attendance

- Comments -- follow-up required and or personal notes.

2. When the form has been reviewed by the system operator for completeness and appropriateness of the information recorded, it is added to the meetings file created and maintained on the OIS. This involves keying the input data (from the form) into the file. This is done once the appropriate file has been identified and accessed and the function for adding new records selected on the list processing application. Each meeting constitutes a new record. It is estimated that each record will contain 10 data fields totaling 150 characters. The maximum number of records to be maintained in the file on an annual basis is 300. These records can be annually archived to diskette and later re-input in the system for file queries, on an as-needed basis.

3. Verification of the data entered into the file is necessary to ensure its accuracy and completeness. This is critical to the success and timeliness of subsequent file queries. This should be performed by visually comparing the recorded informaton placed in the file with the hard-copy meetings (input) form after the record is added. This requires the operator to output to the printer each new record added. This can also be accomplished as the record is added by visually comparing the information displayed on the terminal screen with the completed meetings' form. Once the verification process is complete the meetings form can be disposed of or placed in a working file as backup to the system file.

4. As the need arises to produce special reports (no formal reporting required) from the file, new list processing specifications need to be written to generate the report data. These specifications include the criteria established to search and select records from the file. For example, a list of all meetings during the past six months regarding Honduras would require the operator to specify values for selected data fields in which the search would take place.

This would include the specific country involved -- Honduras -- and the appropriate range of dates required to identify all such meetings during the previous six-month period (values can correspond to either numeric or alphabetic fields of the records in the file). Having specified the criteria, the operator would execute the list processing function to identify the records in the file meeting the criteria established. In all cases, the nature of the search is dependent upon the file structure which will be determined during the detailed design and implementation stage.

5. When the search has been completed, the records selected can be arranged in the particular order required. This is done through the list processing Sort, which arranges the selected records within the list processing file. The order of the sort is designated by the operator and can include a chronological or alphabetical sort of the records selected.

6. When the list processing Sort has been completed, the operator may select the desired output format. This includes displaying the selected/sorted records on the terminal screen. This step allows the operator to compare the records selected against the search criteria specified. Each record selected would contain all field values formatted in the file.

7. If a hard copy of the selected/sorted records is required, the operator can output these records and the specified data fields to a word processing document. This document is stored electronically on the OIS and contains all the selected/sorted records in the sort format. This step allows the operator to manipulate (edit) the records output, as required, without altering the master file(s). The document ID facilitates access and retrieval of the selected/sorted records for the particular inquiry.

8. Formatting the document allows the operator to manipulate/edit the records output. This would include adding any headers, inserting tabs, changing margins and or spacing and any other word processing functions available on the system to meet report requirements. Once the format instruction are completed, the records can be output (hard copy) to the printer.

The above illustration indicates the general procedures involved in using list processing to achieve a limited data storage and retrieval application. It should be noted that considerable development work is needed for even this simple application. This would include:

- Clarifying system objectives
- Defining report needs
- Defining data fields of the records and file structure
- Developing file maintenance procedures and list processing specifications
- Developing file storage procedures
- Establishing the initial file(s) of information.

6. A/AID, ES -- RECEPTIONS INVITATIONS LIST

A/AID currently compiles and maintains several lists of individuals' names used to prepare invitations for monthly A/AID receptions. These lists are manually produced from information currently available and supplemented with information provided from sources within and outside the agency. According to A/AID personnel, the majority of these lists are incomplete, containing only the name and address of the individuals identified. The estimated file size of this application and non-complexity of the manipulations needed to generate reports appear to make it a viable candidate for OIS list processing application.

The flowchart in Exhibit IV-7 illustrates the general operation of A/AID's "Receptions Invitations" system. It is a hypothetical design for this application since the current system is manually oriented and incomplete and does not include the steps depicted in the chart. Consequently, automating this system on the OIS will significantly improve A/AID's report generation capability, and record keeping practices. With the establishment of a comprehensive and central data base, the effort required to produce reports can be reduced. In addition, special inquiries and file updates can be accomplished in a more thorough and timely fashion than currently.

The flowchart summarizes the general steps for maintaining the system and generating ad hoc reports in response to specific inquiries. As in Exhibit IV-6 -- A/AID

EXHIBIT IV-7

A/AID, ES -- Receptions Invitations List

INPUT NEW AND UPDATE OLD RECORDS

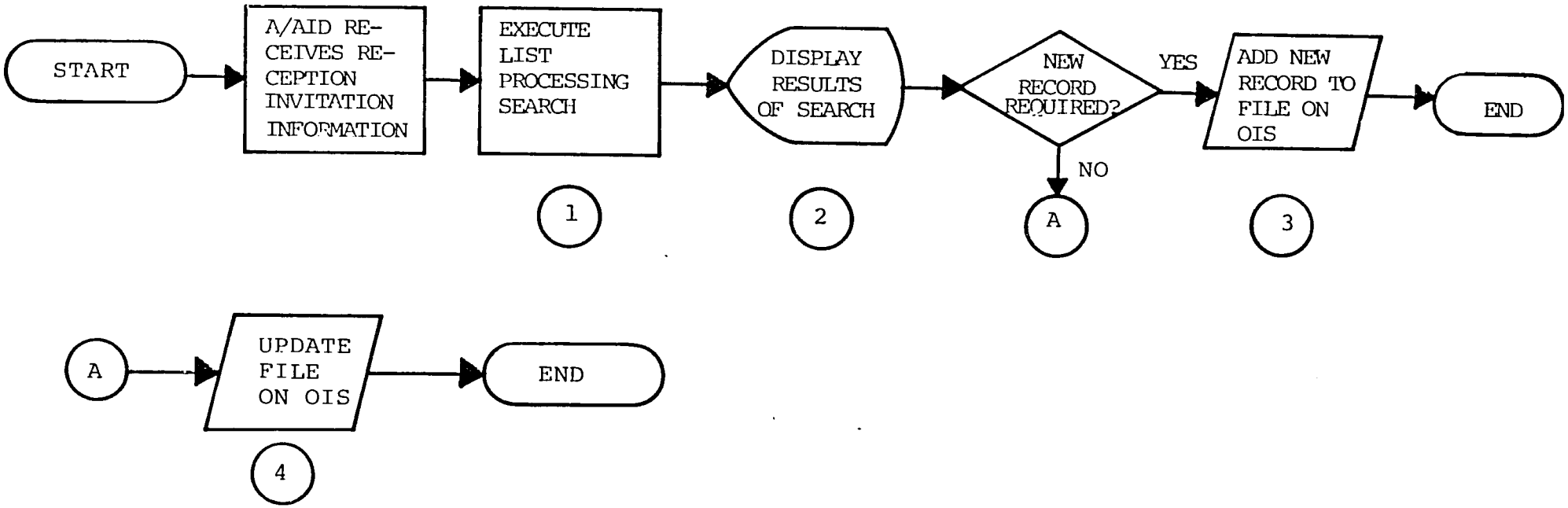

REPORT GENERATION (SPECIFIC INQUIRY)

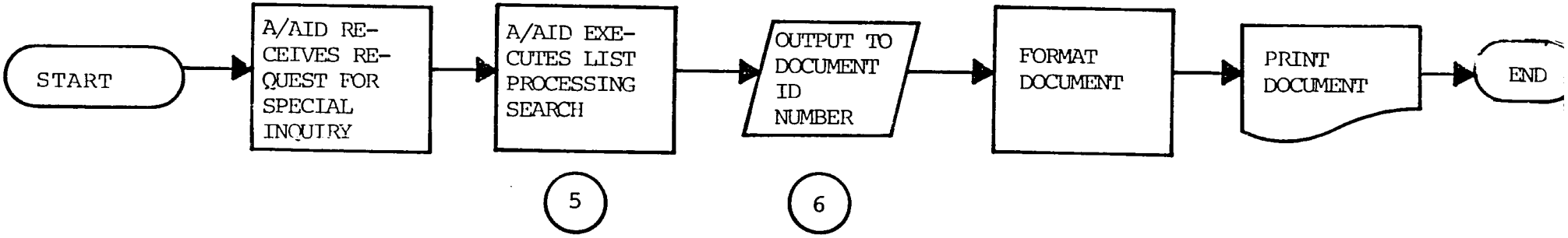

"Meetings" -- the chart assumes the initial data base has been developed and is on an CIS storage medium (disk or diskette).

The purpose of this system is to provide a means of maintaining and selecting names of individuals to attend A/AID monthly receptions. The individuals listed would include noted scholars, organization heads and other VIPs. These individuals could be categorized by program interest, organization and/or topical specialty for selection purposes. Invitation lists would be generated monthly, through specific inquiries within the data base, typically in response to the reception topic, e.g., irrigation.

The following description of the major steps of system operation, as described by A/AID and adapted by the study team, are keyed to the flowchart.

1. As A/AID receives receptions invitations information, the system operator would initiate a file search to determine if a new record needs to be established or an existing record revised/updated. (Although it may be evident from the information provided and operator's knowledge/familiarity with the records in the master file, the potential size of the file -- estimated to include nearly 1,000 records -- may necesitate that a search be initiated.) Having accessed the list processing file containing receptions invitations records, search criteria would be specified and the search initiated. The search criteria specified could include any one or combination of values for selected data fields stored on the system including individual name, organization, subject code or previously invited. The process for initiating the search will be determined by the file structure to be formatted during implementation. This discussion also assumes the quality and quantity of the information received is adequate to easily initiate a file search. The ability of the operator to perform this function on this system can vary with the nature of the information provided, e.g., consistency of information received, file structure and record format. The estimated number of new records and updates/revisions of existing ones is five per week.

2. The results of the search would be visually displayed on the terminal screen. This would allow the operator to determine which record(s), if any, meet the criteria specified and any other

additional search requirements that may be necessary in the event that more than one record meets the criteria specified.

3. If a new record needs to be created in the file, the system operator will execute the function for adding new records on the list processing application. This process will, as discussed in step 1, be determined by the file structure. New records can also be entered into the file via word processing. Although this process of adding new records does not require the operator to wait at the workstation and check each record as it is added to the file, it does necessitate that a word processing document, set up in the correct sort format, have a document ID assigned to it. Once the records have been added to the document, the system is instructed to read the document into the file. It is critical (using this method) that the field values entered into the word processing document are in the same order in which they were formatted in the list processing file. Each record will contain an estimated 10 data fields totaling 150 characters.

4. If the information received is in reference to an existing record stored in the file, the operator would complete the required record update/revision. This process would entail accessing the proper record through a coded sequence number identified with each record and entering the information provided in the appropriate data field(s). This edit process is an "interactive" (on-line) method of changing field values in an individual record which requires the operator to enter the information provided into each appropriate record in the file. However, this process could be accomplished through the batch method of file updating. This second method allows the operator to make global changes to a group (batch) of operator selected records. Individual records within a group can also be changed. This method is more suitable for a large number of similar changes within a file. For example, the batch method could be used to update the previously invited data field for all those individuals who attended a previous reception. File access by the operator is not required. The changes are made to a word processing document which contains the file changes required (same process as described in step 3). This method reduces amount of operator time required on the system and saves keystrokes.

5. Reports to be generated from the master "receptions" file will be based on specific inquiries. These inquiries will determine the search criteria required to select the names to be included on the reception invitation list. This would typically include the topic of the reception which has been cross-indexed to the subject codes maintained in each record. Multiple search criteria may be used, e.g., subject code and previously invited. Thus, the search would be conducted within the data field(s) specified for all records contained in the file. Having specified the criteria, the operator would execute the list processing application to select those records meeting the criteria.

6. When the list processing application has been completed, the operator would output the selected records and specified data fields to a word processing document (this process is a modified version of the one discussed in A/AID -- "Meetings" in that the list processing sort and display steps have been omitted). As discussed in step 7 of the narrative for Exhibit IV-6, this document is stored electronically on the OIS. The document ID facilitates access and retrieval of the selected records and allows the operator to subsequently format (edit) the document prior to the actual printing of it.

As with the system described in Exhibit IV-6, considerable development work is needed for this application. This would include establishing the initial data base on the OIS (file structure and initial keystrokes to input data) through defining report needs and developing procedures for file maintenance and storage. Of paramount importance is the file structure and maintenance procedures due to the estimated file size and potential duplications within records, e.g., program interests, which could affect the system's (performance) responsiveness in conducting a file search and retrieving selected records.

7. EXRL--EXTERNAL GROUPS

EXRL "External Groups" is currently in the conceptual design phase. The purpose of this system is to provide a record of organizations and other entities outside AID that have an interest in AID policies and programs. This information would be utilized, by AID, to maintain working relationships with these groups. At present, EXRL has compiled several lists of these organizations; however, the data are incomplete.

As envisioned, the system could reach an estimated 600 records within the file(s) established. Each record would include approximately 20 data fields totaling between 200 and 300 characters. Virtually all reports, e.g., listings of organizations meeting specified characteristics, would be produced on an ad hoc basis. Similarly, special inquiries would be handled as the need arises. Although the anticipated volume and frequency of file queries and updates required may vary, the update character volume will likely be insignificant as the data base should remain fairly stable.

The flowchart in Exhibit IV-8 illustrates the general operation of EXRL's "External Groups" system. The chart summarizes the general steps for maintaining the system, generating ad hoc reports and conducting special inquiries into the file. (These steps are similar to those included in both Exhibits IV-6 and IV-7). As with the other flowcharts, it is assumed that the data base (external groups) has been developed and is on an OIS storage medium.

The following description of the major steps of system operation, as described by EXRL and adapted by the study team, are keyed to the flowchart. Where appropriate, reference is made to desriptions of similar proceses and steps contained in the flowcharts previously described.

1. This step is similar to the process described in Step 1 of Exhibit IV-7, A/AID, ES "Receptions." This would include a file search to identify whether the information received requires creation of a new record or update/revision to an existing one. The search would be conducted based on specified criteria which are consistent with field values formatted for each record in the file. These data fields include:

   - Organization name
   - Address
   - Subject/interest or other categorization of topical interests
   - Names/title of principals.

   Additional data fields may be established during implementation. As in Step 1 of Exhibit IV-7, the ability of the operator to efficiently perform this function is dependent upon the consistency of the information received with the file structure and record format. It is estimated

EXHIBIT IV-8
EXRL -- External Groups

INPUT NEW AND UPDATE
OLD RECORDS

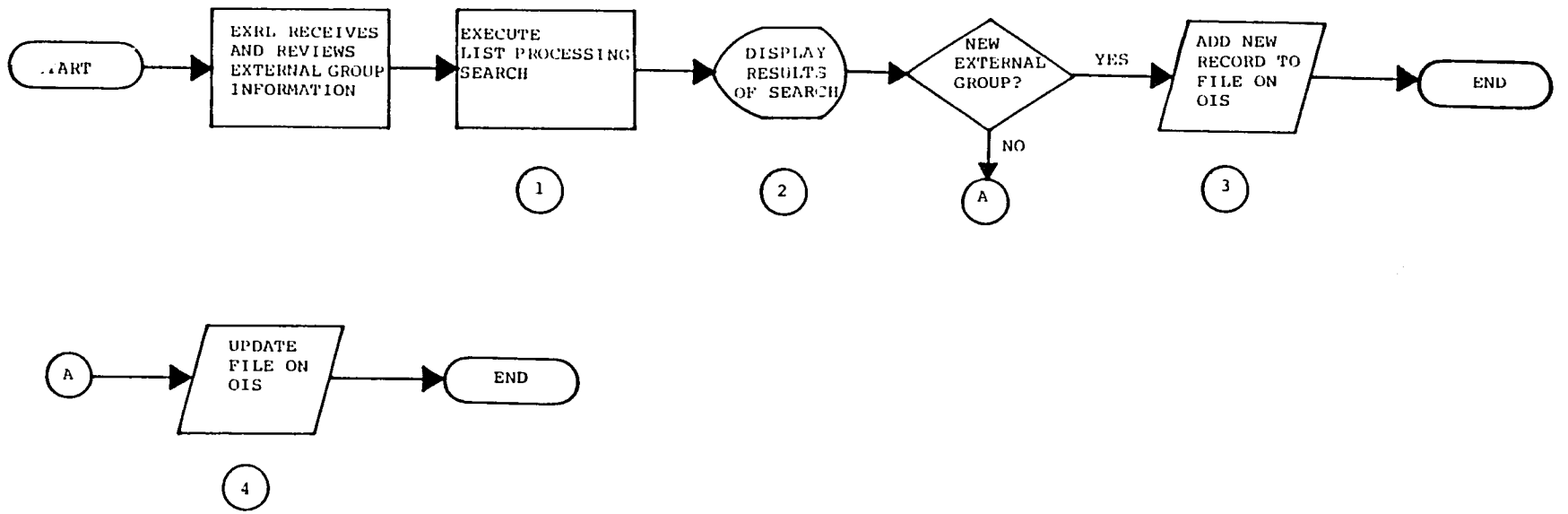

AD HOC REPORTS AND
SPECIAL INQUIRIES

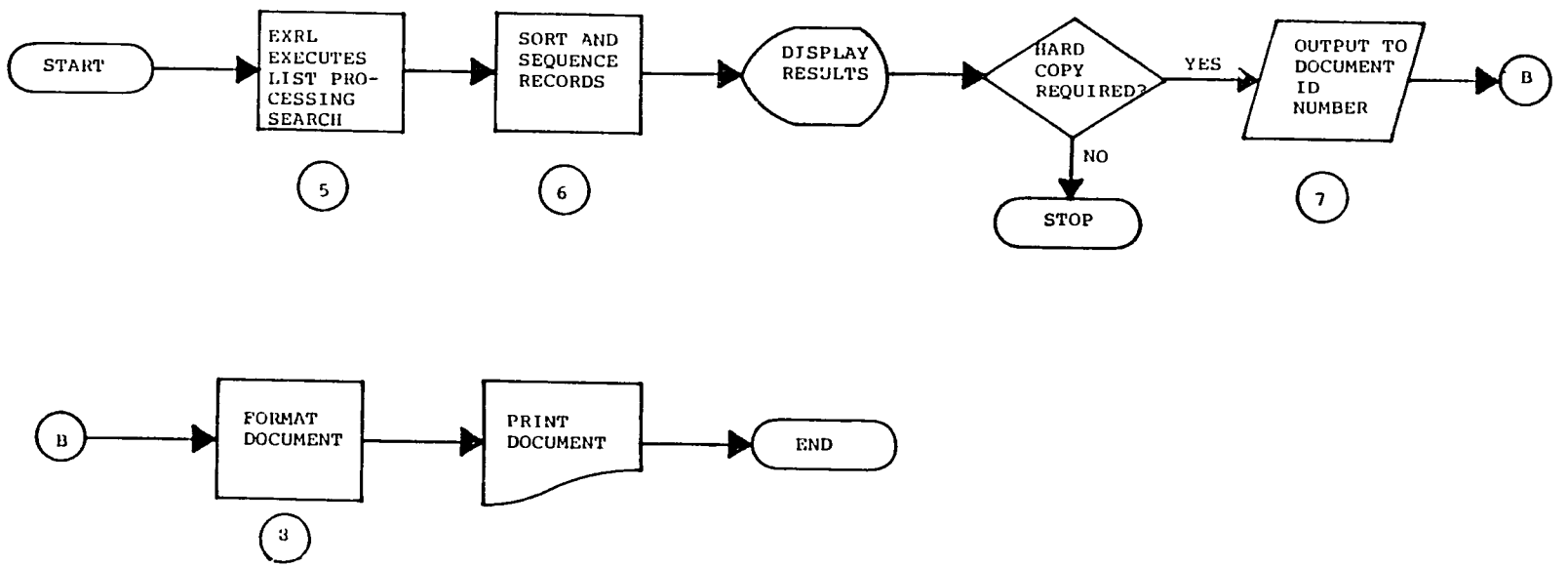

that on a weekly basis, five new records would be added and nearly 40 updates (to existing records) required. However, the update character volume will likely be small as the data base should remain fairly stable.

2. The results of the search would be visually displayed on the terminal screen. This allows the operator to determine whether additional search is needed (in the event that more than one record is displayed) or a new record must be entered into the file. Once the data base is established, it is assumed that the number of new records added to the file will diminish.

3. If a new record is added, it must be formatted in the same manner as the data fields established in the file. As this function is executed, the information received should be entered into the appropriate data fields. The alternative method for adding new records to the file, via word processing, was described in Exhibit IV-7 Step 3 and can be applied in this instance.

4. The process for updating existing records in the file was also described in Exhibit IV-7, Step 4. Briefly summarized this includes accessing the record through a coded sequence number identified with each record (and displayed on terminal screen) and entering the information into the appropriate data fields. This can also be accomplished through the batch method of editing records which is suitable for a large number of similar changes within a file. However, based on the nature of the system, it is assumed that the latter method would have limited utility since each record probably contains unique information which would not be duplicated in any other record. A typical update may require the addition/deletion of a principal in the organization, address change or some other minor revision.

5-8. The process for generating ad hoc reports and handling special inquiries is described in Exhibit IV-6, A/AID "Meetings"--Steps 4-8. Briefly summarized this includes:

> Developing list processing specifications to search and select records from the file

- Executing the list processing application to identify and select those records meeting the specified criteria

- Sorting the selected records within the file

- Displaying the selected and sorted records on the terminal screen

- Outputting the records to a word processing document (stored electronically) to manipulate the records, as required (if hard copy is needed)

- Formatting (editing) the document to organize the records output, as required, for print.

For example, if EXRL needed to identify all external organizations interested in investment opportunities in the Caribbean basin, the file could be accessed and searched on the basis of subject/interest data field. All those records selected would be sorted and sequenced in some predetermined order such as their geographical location. These records could then be viewed on the terminal screen and, if required, output, in hard copy, to the printer.

The unique requirements of this system, e.g., file structure, record format, etc., which would affect the procedures used in system operation, file storage and maintenance will be determined during detailed system design and implementation. Considerable development work will, therefore, be required and include those same elements briefly described in Exhibit IV-6, A/AID "Meetings".

8. EXRL -- CONFERENCES ATTENDED

EXRL "Conferences Attended" is a semi-automated system currently used to generate reports of upcoming conferences and meetings to be attended (or anticipated attendance) by agency staff. AID bureaus/offices submit, bi-weekly, conferences attended reports from which information is entered into a Wang 5-3 stand-alone word processor. No manipulations are currently performed on the information stored on the system. Bi-weekly reports are generated, by EXRL, listing (by month) upcoming and recently attended conferences. At present, no systematic and standardized approach for bureau reporting (to EXRL) has been established.

Automating this system on the OIS will provide the opportunity to improve information flows between the bureaus and EXRL and enhance report generation capabilities. Greater standardization in Bureau (input) reporting will increase the consistency of data entered into the system by EXRL. In addition, enhanced analytical and reporting capabilities can be realized within the data base established on the OIS. However, the required manipulations, such as search and sort, for report generation will be determined during the implementation phase.

As envisioned, the maximum number of records in the file(s) on the OIS is estimated at 150 at any one time. This will, of course, depend on archiving practices instituted and incorporated in the file maintenance and storage procedures to be developed. Each record would include approximately 10 data fields totaling 150 characters.

The flowchart in Exhibit IV-9, illustrates the general operation of EXRL's "Conferences Attended" system. The chart summarizes the general steps for maintaining the system and generating reports. These steps are similar to those included in Exhibit IV-8, EXRL "External Groups." Similarly, it is assumed that the data base (conferences attended) has been developed, and is stored on an OIS storage medium (This will require converting the existing data base on the Wang 5-3 to the OIS).

The following description of the major steps of system operation, as described by EXRL and adapted by the study team, are keyed to the flowchart. Where appropriate, reference is made to descriptions of similar processes and steps contained in the flowcharts previously described.

1. EXRL currently receives bi-weekly reports from the bureaus on conferences attended or scheduled. These reports provide EXRL with the information required to "update" the current system. Although the application presented in the flowchart does not anticipate changing the current information flow, it is envisioned that a new form would be designed. This new form would promote greater standardization in bureau reporting. In addition, the format of the form would be consistent with the file structure to streamline file maintenance requirements. The form would provide for the following information to be reported:

   - Date of conference
   - Conference name

EXHIBIT IV-9
EXRL -- Conferences Attended

INPUT NEW AND UPDATE
OLD RECORDS

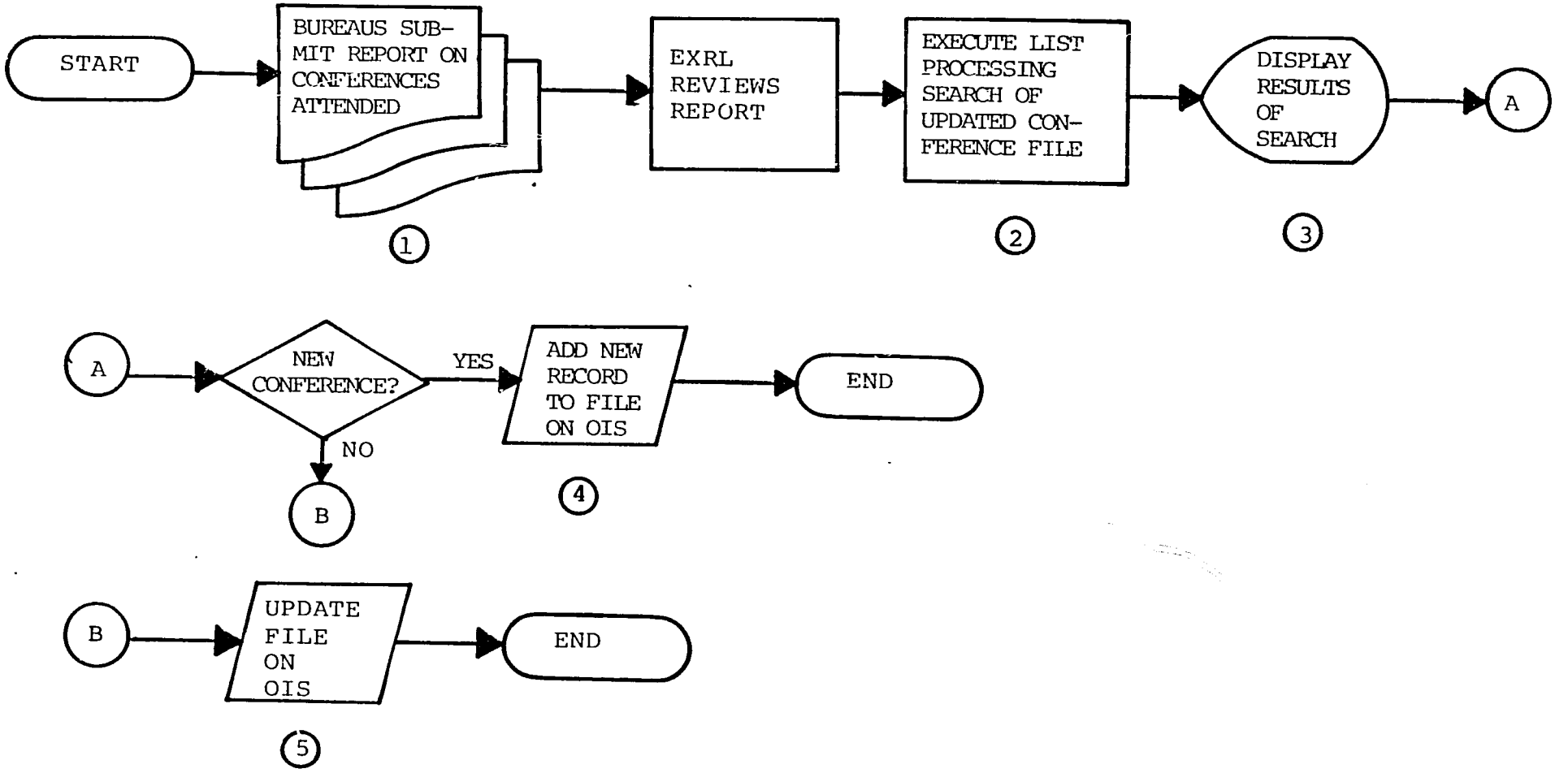

CONFERENCES ATTENDED
REPORTING

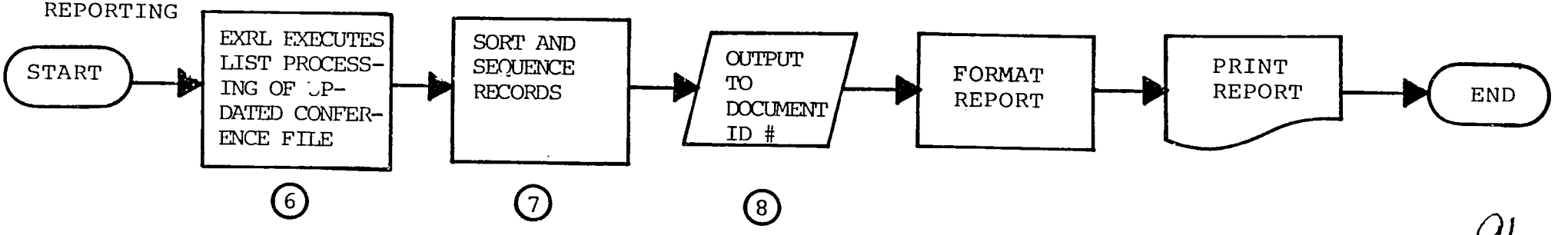

- Location

  - City, State
  - City, Country

- Subject/Purpose
- Bureau
- Bureau representative/attendee(s)
- Comments (as required)

These data elements would also be used to format each record within the conference file(s) established on the OIS.

2-5. These steps are similar to the process described in Exhibit IV-8, EXRL "External Groups" Steps 1-4 and Exhibit IV-7, A/AID, ES "Receptions" Steps 1-4. Briefly summarized this includes:

- Accessing the file and specifying search criteria

- Executing list processing application to identify and select record(s) meeting criteria specified

- Determining, through visual observation, whether the information provided is an update to an existing record or requires creation of a new one.

- Entering information into the file as a new record or update to an existing one. At present, the input (update and new records) frequency would occur several times during the week as the forms are received from the bureaus. In addition, the process for adding new records could be accomplished through either the interactive or batch method. However, updating existing records would probably be done through the interactive method since each record contains unique information which would not be duplicated in any other record.

6-8. EXRL is currently responsible for conference attended reporting. This is done on a bi-weekly basis and, under the system application described in the flowchart, would not change. The steps presented in this flowchart are similar to those

described in Exhibit IV-6, A/AID "Meetings" Steps 4-8. Briefly summarized this includes:

- Accessing the conference file and specifying search criteria
- Executing the list processing application to identity and select records meeting criteria specified
- Sorting the selected records in the required order, e.g. chronologically
- Outputing the selected records and the specified data fields to a word processing document
- Editing the records output to the word processing document prior to output (hard-copy) to the printer.

The unique requirements of this application with respect to report generation involve several elements of the process summarized in steps 6-8. Initially, the criteria specified to conduct the file search would typically involve a limited number of data fields. This would involve specifying the values associated with the data field containing the conference date information. In addition, those records selected would be chronologically sorted, by month, as is currently reported. Additional sorts may be conducted, as required. Further "customizing" of the report could also be made either through word processing edit, after the report is output to a word processing document, or by attachment of a specified format to the report which would be previously developed and stored in a word processing glossary.

It should be noted that some development work will be required for this application. Although it might be less than that required for the non automated or conceptual systems previously discussed, it will include:

- Defining file maintenance and storage procedures
- Developing list processing specifications

- Developing revised/standardized forms for Bureau reporting and data entry.

In addition, conversion of the existing data base to the OIS and, if necessary, redefining and developing report program(s), file structure and data fields would substantially increase the amount of development work required.

9. LEG -- PHONE INQUIRIES

LEG "Phone Inquiries" is a semi-automated system currently used to analyze and generate reports of Congressional phone inquiries received by AID. These phone inquiries are recorded by the bureaus/offices, on a Congressional telephone request form. This form is received, reviewed and stored in LEG. If a response is required, LEG either sends pre-printed material e.g. brochures, publications, etc., to the inquirer, prepares a standard reply or tasks a bureau/office to prepare a written response. This latter course of action would eventually be incorporated into the controlled correspondence flow for outgoing/Congressional correspondence. On a bi-weekly basis, data from these forms are entered into the Wang 5-3 stand-alone word processor to generate a report for internal (LEG) review and analysis. These forms require minimal update and do not involve complex manipulations to generate reports.

Automating this system on the OIS will improve records storage and retrieval and report generation capabilities. Establishing this data base on the OIS could reduce the search and retrieval effort required to respond to special inquiries and produce reports. This would depend upon the volume of Congressional phone inquiries received, special (file) inquiries required and frequency/nature of reports produced.

The flowchart in Exhibit IV-10 illustrates the general operation of LEG's "Phone Inquiries" system. The chart summarizes the general steps for maintaining the system, generating reports and responding to special inquiries. As with the flowcharts described previously, it assumes the data base has been established and is stored on an OIS storage medium. (LEG does not currently store this information (data base) on the Wang 5-3 word processor which is used to generate the bi-weekly report.)

As envisioned, the purpose of this system is to provide a record of Congressional phone inquiries made to LEG and the other bureaus/offices for analytical and reporting purposes. It has been estimated that new records would be

EXHIBIT IV-10

LEG--Phone Inquiries

TELEPHONE INQUIRY INPUT

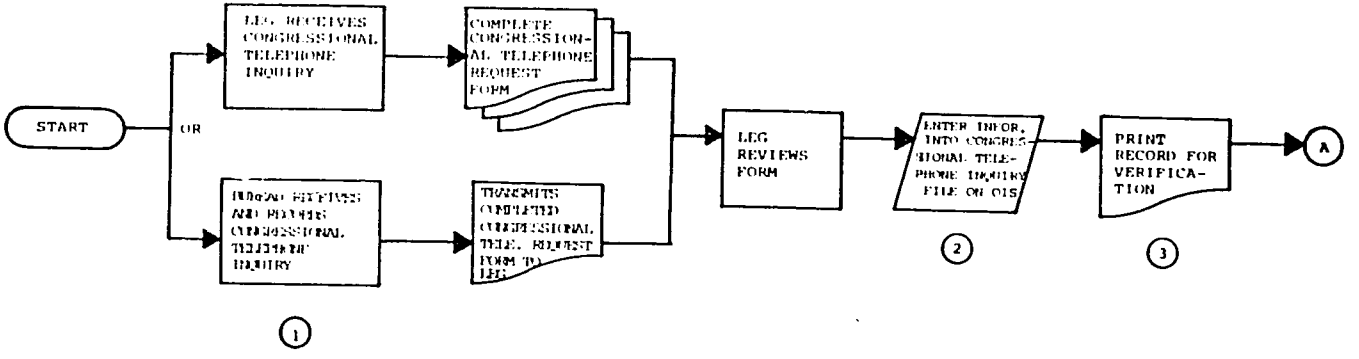

TELEPHONE INQUIRY REPORT

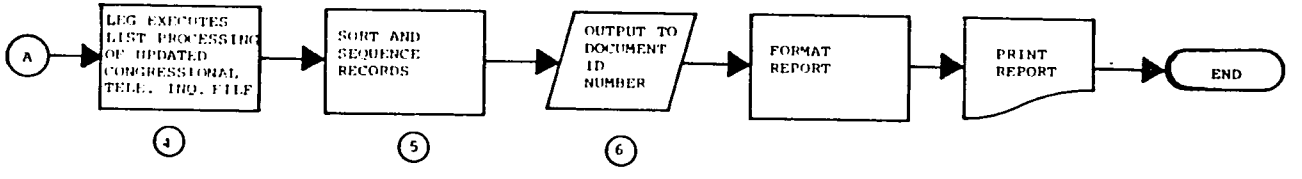

SPECIAL INQUIRY

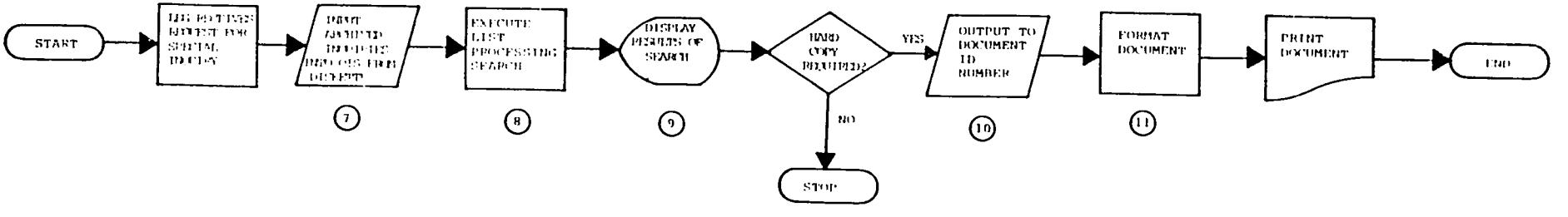

added to the file at the rate of 20 per week. Little updating of existing records is expected. The current Congressional telephone request form used by AID would provide the source of information for adding new records to the file. Reports would be prepared on a weekly or biweekly basis to analyze the inquiries received. These reports would provide a listing (e.g. from whom, received by, nature of inquiry, action required) and summary analysis of the inquiries received (by Bureau). Ad hoc file inquiries would also be performed.

The following description of the major steps of system operation, as described by LEG and adapted by the study team, are keyed to the flowchart. Where appropriate reference is made to descriptions of similar processes and steps contained in the flowcharts previously described.

1. Congressional phone inquiries recieved by AID are generally recorded on the Congressional telephone request form. Once completed, this form is sent to LEG (for calls received in the bureaus/offices) to determine the appropriate response, if any, required. (Most inquiries received do not require preparation of a written response.) Thus, the steps presented in this flowchart do not vary from current procedures.

2. When the form has been reviewed by the (LEG) system operator, it is added to the Congressional inquiries file created and stored on the OIS. This involves keying the input data (from the form) into the file. This is done after the file has been accessed and the function for adding new records selected on the list processing application. Each "inquiry" constitutes a new record. It is envisioned that the information to be input in the file (for each record) is similar to that recorded on the form and could include:

- Control Numbers (from the completed form)
- Bureau/office (received by)
- Inquirer
  - Name
  - Position
  - Staff assigned to
- Date Received
- Telephone (contact) number

- Received by (name)
- Referred to (Bureau/Office)
- Nature of request
- Action taken (if any)
- Date action taken
- Comments.

It is estimated that each record will contain 150 characters. The maximum number of records in the file(s) established is estimated at 100. These records can be archived to diskette and later retrieved for file queries, on an as-needed basis and in accordance with file maintenance and storage procedures developed.

3. Once the form has been entered into the Congressional inquiry file(s) a copy of the record should be printed. This hard copy would be used to verify the accuracy and format of the data input into the system with that recorded on the form. This will improve the ease and timeliness of subsequent file queries made. This step can also be accomplished as the record is added by visually comparing the information displayed on the terminal screen with the completed Congressional telephone request form. Once the verification process is complete, the form can be disposed of or placed in a working file as backup to the system file.

4-6. LEG currently prepares a bi-weekly report of Congressional inquiries received. It is assumed that this report would not change in the application illustrated. (Changes to this report and additional report requirements would be established and developed during the detailed design and implementation stage). The steps presented in this flowchart are similar to those described in Exhibit IV-6, A/AID "Meetings" Steps 4-8. However, the unique requirements of this application involve several elements of the process described in the flowchart. Initially, the criteria specified to initiate the file search would typically be conducted within the date received data field. The records selected would include all those inquiries received during the reporting period. In addition, those records selected would be chronologically sorted. Additional sorts may be conducted, e.g., by bureau, as required. Third, the information reported for each record selected need only include a limited number of data fields such as date received, bureau/

office, inquirer, nature of request, referred to, action taken and date action taken. As is currently reported, a summary analysis, by bureau, of the calls received during the reporting period could also be generated. Any additional editing to the report would be made either after it is output to the word processing document or by attaching a pre-specified report format which would be stored in a word processing glossary on the OIS.

7-11. This process is similar to that described in Exhibit IV-6, A/AID "Meetings" Steps 4-8, with one modification. This modification involves the sort and sequence process which, due to the nature of the inquiry and limited number of records to be selected, would not be needed in this application. However, it should be noted that this process does include a step (7) for retrieving previously archived records to conduct a file inquiry. Performance of this step 7 depends upon and is influenced by several factors including file maintenance and storage procedures developed, archiving practices used and the nature of time period involved with respect to the inquiry received. If necessary, the diskettes(s), with the records to be searched, are re-entered into the system. These records as well as those maintained on the OIS, if necessary, could then be included in the conduct of the file query. The current estimated number of file queries is 30 per year. Regardless of the number of special inquiries conducted, the steps presented in this flowchart would need to be performed.

Considerable development work will be required for this application. Although this application is currently semi-automated for report generation purposes, no data base has been created on the OIS. Consequently, it will be necessary to:

- Clarify system objectives
- Define report needs (or incorporate current report requirements)
- Redefine, as required, data fields of the records and file structure
- Develop file maintenance and storage procedures and list processing specifications
- Establish the initial file(s) of information.

V. SYSTEM MANAGMENT

V. SYSTEM MANAGEMENT

This chapter presents conclusions and recommendations on management arrangements for the OIS 140 as installed to serve the five offices. This discussion covers the overall management structure and its implications for staff responsibilities, new operational procedures and staff training needed to incorporate the system's capabilities into office practices.

1. A NEW, SPECIALIZED MANAGEMENT STRUCTURE IS NEEDED TO DIRECT AND CONTROL OPERATION OF THE OIS 140 IN THE FIVE OFFICES

Unlike the current stand-alone equipment in the offices, the OIS 140 equipment comprises a single, ES/EXRL-wide system. This, coupled with the OIS's shared-logic organization, results in the need for a single, clear management structure to plan, operate, maintain and monitor OIS 140 usage. This is especially critical since the study offices are independently managed and perform a diversity of management and information processing functions.

A new system management structure must be established to meet the OIS 140's requirements. While the introduction of the OIS 140 into the study offices will not significantly affect the basic content and flow of the five offices' work, it will affect some office routines. In addition, the current organizational structure and positions do not yet reflect the necessary system managment responsibilities required to manage the OIS 140.

Previous agency experience with the Wang OIS 140 operations reinforces the study team's conclusion that the OIS managment structure should be composed of the following staff roles:

- System manager who formulates and promotes compliance with the system policies and procedures for operations

- Assistant system manager who supervises routine daily system-wide operations

- Lead operators who guide daily system usage in their offices and coordinate workstation usage through the assistant system manager.

System management staff can be selected from ES/EXRL's current personnel who will assume these responsibilities on a part-time basis as additions (or in replacement of) their existing duties. Agency personnel policies and practices do not allow for full-time dedicated positions solely to administer an office automation system within a bureau or office. This does not represent a handicap to effective office automation operations since the tasks involved are less than full-time efforts for any position, following an intensive system development and implementation phase.

Appendix C to this report lists the set of responsibilities associated with each of these three staff roles. These responsibilities must be assumed as collateral duties by incumbent staff by incorporating these new responsibilities into their position descriptions.

2. THE SYSTEM MANAGEMENT STRUCTURE IS ORGANIZED ALONG FUNCTIONAL LINES, OPERATING WITHIN THE EXISTING MANAGEMENT AND ORGANIZATIONAL STRUCTURE OF THE FIVE OFFICES

The functional line of supervision between the system manager and other system management staff does not affect the direct supervisory line established in the ES/EXRL organizational structure. Staff assigned to these roles continue to report to and to be evaluated by their current supervisors. Performance evaluation, however, would include assessment of system management responsibilities.

Exhibit V-1, on the following page, illustrates the recommended OIS management structure. To assure that the system management role operates within the recognized decision-making structure and line of reporting, senior management in the study offices must determine the level of authority the system manager may exercise. One approach would be to delegate operational policy decisions to the system manager while retaining decisions affecting ES/EXRL staff and budget at existing management decision levels. Examples of operational policy issues under the purview of the system manager would include:

- Compliance measures to maintain system integrity and effectiveness
- Local office user reporting requirements to monitor and evaluate system performance
- Standards for implementation of advanced applications.

EXHIBIT V-1
Recommended ES/EXRL System Management Structure

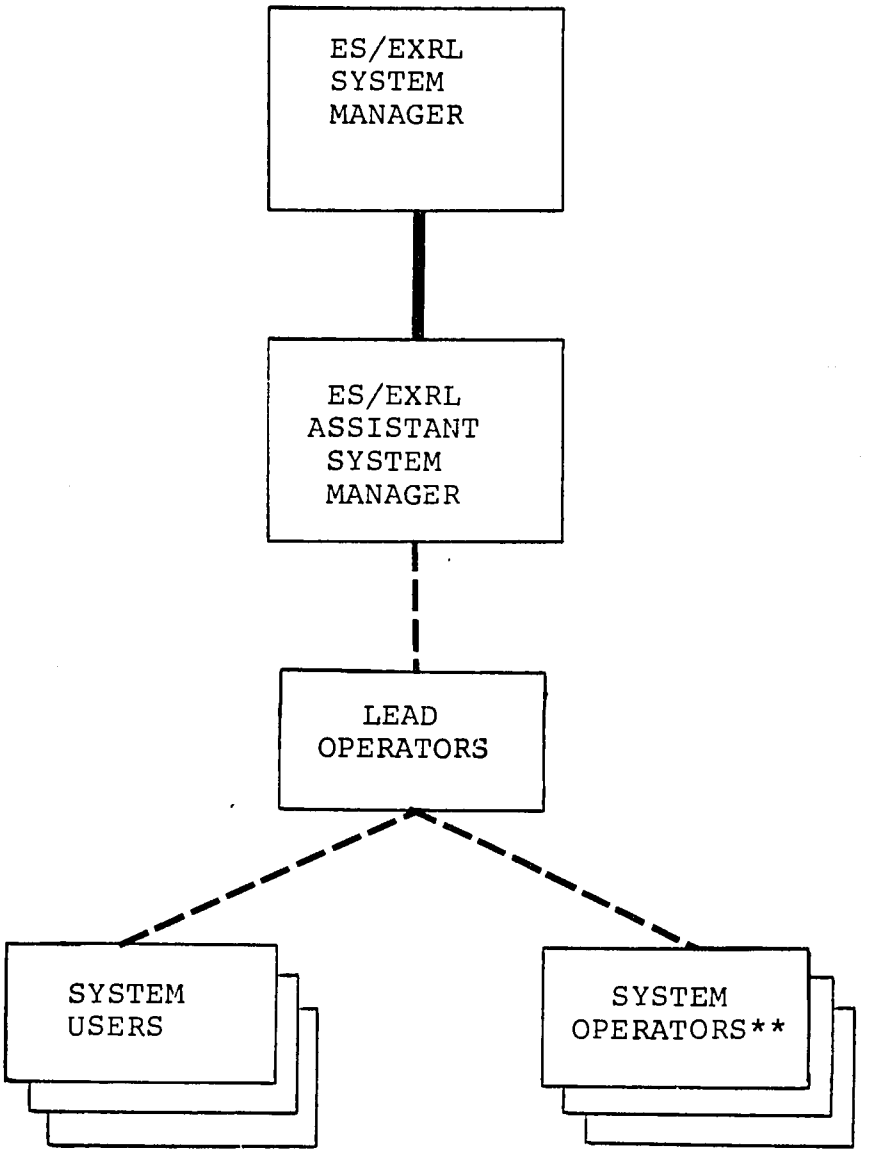

* Each office would select a single lead operator to guide office-wide use of shared equipment and to coordinate system usage by both users and operators. This arrangement would result in a total of five lead operators associated with the five bureau/office level organizational units.

**Each office would select designated operators who had primary responsibility for specific pieces of equipment whose use would be coordinated by the lead operator.

Decisions which should be retained by senior ES/EXRL management would include:

- System management roles and staffing
- Training strategy
- Major equipment modifications.

Such clarifications in authority would permit the system manager to carry out the responsibility for maintaining a smoothly operating and productive OIS system and to assume the lead role in defining system issues and options for senior management's consideration and clearance.

The OIS system management structure has an important mandate to serve ES/EXRL managers as well as system users and operators.

- Staff in system management roles are accountable to ES/EXRL managers for the performance of the office automation system in meeting the offices' document preparation needs

- System users, which refers to all staff whose work processes interact with, and benefit from, this OIS system, should expect response to their inquiries on potential system applications as well as support for their specific word processing needs in the ES/EXRL-wide system.

- System operators, which refers to all staff who directly operate OIS equipment components, should also expect responses to their questions on specific equipment features and applications as well as support and recomendations for system-related issues they may encounter, e.g., with training, work priority and other operational procedures.

The major responsibilities of each of the system management roles are outlined in the sections which follow.

(1) <u>The System Manager Has Primary Responsibility for System-Wide Management and Decision-Making</u>

The system manager role includes the following types of responsibilities:

- Supervision of system start-up

- Approve and assess training activities

- Development and enforcement of system operating policies and procedures

- Evaluate and recommend revised procedures as necessary

- Formulation of issues and recommended strategies in office automation for ES/EXRL senior management.

Management skills are more essential than technical expertise in performing these duties. It is anticipated that the initial start-up phase will demand considerable system manager time and be reduced as the system enters routine operations.

(2) <u>The Assistant System Manager Carries Out Routine System-Wide Operations Supervision</u>

The assistant supports the system manager by managing the system on a day-to-day basis and is the primary system resource to lead operators and other system operators. The major responsibilities of this role include:

- Provides expert technical assistance on operations on the OIS 140

- Carries out system-wide maintenance functions, i.e., brings the system up and takes it down

- Maintains supply (stock) inventory

- Monitors daily usage in accordance with established procedures, i.e., system storage

- Maintains utilization logs for all five offices for evaluation.

Following a brief transition period into the new responsibilities, the assistant system manager's role should require several hours a week.

(3) <u>Lead Operators Coordinate ES/EXRL Office-Level System Operations, and Designated Operators Are Responsible for Specific Workstations Under the Guidance of the Lead Operator</u>

The OIS is structured as an "office-wide" system in which workstations and printers are assigned to ES/EXRL's five office-level organizational units to support their document preparation work load. Workstations and printers are assigned on an office and/or division basis because both are intended to support the work processing work load of an entire office/division rather than individual staff members.

In ES/EXRL, it is anticipated that staff in a variety of job positions will operate the Wang equipment to support their work. However, to effectively manage this shared resource as well as to provide a clear line of system management responsibility, it is recommended that each office, e.g., EXRL, OPA, LEG, assign staff to two critical roles:

- A lead operator, who is the staff member responsible for directing office-wide utilization and administration of the OIS 140 by both users and operators.

- Designated operators, who are staff whose current job responsibilities include typing and related functions, thereby being the primary equipment operators.

The primary responsibilities of the lead operator's role are:

- Serve as the office's recognized expert on OIS operations

- Orient new operators and all system users to appropriate applications of the OIS's capabilities

- Supervise daily usage in accordance with established procedures

- Coordinate equipment access among the office's divisions and staff when conflicts cannot be resolved by the designated operators

- Represent their offices in ES/EXRL-wide consideration of system operational procedures and equipment issues which appear to require corrective action

- Bring system-related problems and initiatives to the attention of the system manager and assistant system manager.

In addition, the lead operator will maintain utilization logs for their respective offices, establish work priorities, and ensure that sufficient operating supplies are available on a daily basis. The lead operator is usually the staff member with existing responsibilities for orientation and coordination of the work of all staff in clerical and secretarial positions within the office-level organizational unit.

However, if no one individual has this responsibility, the lead operator may be selected from the office's roster of designated operators.

Designated operators are usually selected from staff in clerical and secretarial positions since the word processing system is intended to directly improve their document preparation activities. The number of designated operators assigned to the individual workstations would range between 13 and 20. This range reflects the potential for more than one operator assigned to a workstation due to workload and staff support arrangements. Specific workstations and printer locations should be assigned to the designated operators so these individuals can:

- Receive the level and specific type of training necessary to support the type of applications their office uses

- Assume responsibility for maintaining proper operations at their workstation and notify the lead operator of system needs (e.g., re-ordering of supplies as well as equipment malfunctions).

3. <u>THE SYSTEM MANAGER AND ASSISTANT MANAGER SHOULD BE IN THE OFFICE OF THE EXECUTIVE SECRETARY</u>

The system manager and assistant system manager roles should be associated with an office's function rather than with specific staff members', to ensure continuity and reinforce authority. Their organizational location should be based on the office whose mission and functions best support the office automation management responsibilities these two critical roles must carry out.

The following office functions are most supportive of the system manager and assistant system manager roles:

- Agency-wide service organization

- Management of shared "office" responsibilities

- Recognized authority to coordinate office-level activity in administrative areas, e.g., correspondence control

- Ability to make final decisions in administrative areas and to inform senior management of decisions requiring their approval, as well as the implications of alternatives for the offices as a whole.

Based on the organizational "fit" and discussions with ES/EXRL study offices, the Office of the Executive Secretary (ES) appears to the be the best location for these two critical roles. This rationale is supported by three facts:

- ES has the organizational perspective that covers all the study offices which has been expanded as a result of its lead role in the ES/EXRL working group during this study

- The responsibilities of the system manager's role complements ES's existing functions

- ES already has the authority to coordinate and control activities in direct support of the Administrator's office.

To promote coordination, the assistant system manager would also be located in ES to permit the frequent interaction and complimentary support needed between the two roles. Experience in other offices suggests that the system manager be selected from professional staff while the assistant system manager be selected from senior administrative or support staff.

4. AN OPERATING POLICIES AND PROCEDURES MANUAL WILL ASSIST ES/EXRL MANAGERS AND STAFF IN INTEGRATING THE SYSTEM INTO CURRENT OFFICE ROUTINES

In addition to requiring a new system management structure, the introduction of an office automation system also requires the development of new operating policies and procedures to assure effective use of the system and to minimize potential problems. These new procedures would be organized into an ES/EXRL-specific operating policies and procedures manual and should be developed under the direction of the system manager and approved by ES/EXRL management prior to dissemination to ES/EXRL managers and staff. Such a reference document provides a basic set of controls which should reduce staff frustration during start-up and avoid some risks which can seriously disrupt operations and productivity.

(1) Operational Procedures Need To Be Specified As Guidance On A Large Number Of Topics

ES/EXRL staff will need a wide range of information on how the system is organized and its capabilities, when it should be used, who should operate it, and how it should be operated. The procedural topics include the following information:

- Overview of the OIS 140 and operation
- Location of equipment
- Names and overview of system management and operations staff
  - System Manager
  - Assistant System Manager
  - Lead Operators
  - Other trained operators
- Overview of equipment capabilities
- Use of document ID numbers
- Content of the available glossaries
- Standard revision marks
- Establishment of document priorities
- Library availability
- Library maintenance
- Guidance for filing documents to diskette
- Back-up policy (copying to diskette)
- System security
- Care of diskettes
- Glossary origination
- Circulation of system update information
- Circulation of SER/DM system bulletins
- Supply acquisition
- Technical support acquisition
- Maintenance support acquisition
- Scheduling on-going training
- Recording equipment utilization statistics.

Appendix D to this report provides definitions of each of these needed procedures as a foundation for their specification in the ES/EXRL study offices.

(2) Experience in Other Offices Indicates Areas Where Operational Problems Are Most Likely To Appear

ES/EXRL can benefit from the lessons learned by other organizations during system start-up and ongoing operations. Some typical recurring procedural problems are identified below:

- Competing work priorities for system use
- Failure to label material with reference to document ID numbers
- Inadequate verification of original input data for data base maintenance and report generation
- Leaving material on-line with no back-up copy of diskette.

The establishment and enforcement of system procedures will address the serious consequences which could result from improper system usage.

Some examples help to illustrate the importance of procedures. If the system should go down, some work may be lost from the on-line storage disk. Back-up procedures to routinely transfer important information to diskettes will ease this problem. There may also be times when staff compete for limited time on the equipment, and some work may be delayed. Clear work priority guidelines and professional staff discipline in scheduling can manage this problem. Finally, there may also be instances when staff do not clearly label a document with its reference ID number, and a slow index search must be performed in order to identify and retrieve the work from the system. This problem can be largely prevented by maintenance of good document identification logs and staff support of this process.

(3) Developed By The System Manager, The Procedural Operations Handbook Can Become A Valuable Training Tool

System procedures should be drafted by the system manager, and reviewed and formally approved by the ES/EXRL senior management. The procedures manual can then be prepared for distribution to staff in all the study areas.

With some additions, this manual can be further expanded into a training tool for staff directly operating the equipment. Appendix E discusses the relationship between these two manuals. The additional sections would provide application and feature-specific guidance for staff to follow as they independently acquire skills or for staff to use as they provide instruction to others on usage of the Wang OIS 140.

5. SYSTEM MANAGEMENT STAFF SHOULD ORGANIZE AND COORDINATE OIS TRAINING

One of the key functions of system management is to organize the initial orientation and training of OIS operators and system users, and to otherwise coordinate the ongoing training activities that will be necessary. Because the initial total demand for training will be higher than the supply, training needs must be prioritized and scheduled accordingly. The system management staff should be the focus of this planning and coordination effort. (A recommended prioritization for training is presented in Chapter VI, Implementation Plan.)

In developing a training plan, system management will have two principal training resources to draw on -- equipment vendor-supplied training and Agency-supplied training. As ES/EXRL operators eventually become skilled in all facets of equipment operation, it may be feasible to develop a training program within the staff to orient and train new ES/EXRL staff or staff who may have missed out on the initial training. (Although this is a long-term possibility, not likely to be feasible in the first year of operation, an outline for such in-house training is included in Appendix E.)

The format of the vendor-supplied training is two operators may be trained free of charge per workstation purchased. Since this training is not likely to be available in the quantity and timing necessary to rapidly train all the lead and designated operators in ES/EXRL, it should be scheduled in conjunction with the Agency-supplied training. The training section in the Implementation Plan, Chapter VI, provides guidelines on who should be trained, for what purpose, and when.

VI. IMPLEMENTATION PLAN

VI. IMPLEMENTATION PLAN

Successful office system implementation in the ES/EXRL complex of offices will require careful planning and the phased completion of a number of tasks. These tasks include:

- Siting and installing the equipment
- Staffing the system
- Developing and carrying out a training strategy
- Developing and implementing advanced applications.

The following task statements describe the essential steps in each task, and as appropriate, recommend specific steps for ES/EXRL.

TASK 1-- SITE AND INSTALL THE OIS EQUIPMENT

The objectives of this task are to (1) determine the location of the OIS central processing unit (CPU), work stations, printers, and associated office furniture; (2) laying the cables and attaching the connectors to link the workstations and printers to the CPU.

The first of these objectives has been completed for all offices except OPA, whose equipment locations will be specified after possible changes in its office space have been decided. In conjunction with M/SER/DM/IM, Booz, Allen and the offices involved in the study, the OIS equipment locations were specified in late August. Cabling and facilities modification orders have been placed by M/SER/DM/IM.

As the cabling work proceeds and gives way to equipment installation, the DM/IM, SER/MO, contractor and equipment vendor staff will conduct the majority of this work without requiring support from ES/EXRL staff. ES/EXRL's role in this task should be to answer specific locational questions and to monitor the site work, to ensure consistency with the original plan. Until a system manager and assistant have been appointed, questions or concerns of the offices should be directed to the Executive Secretary's office.

TASK 2-- STAFF THE SYSTEM

The objective of this task is to tailor and assign the responsibilities of operating the OIS 140 system to staff in the ES/EXRL offices to be served by the system. As described in Chapter V of this report, the staff roles needed to operate the OIS include:

- System manager (SM)
- Assistant system manager (ASM)
- Lead operators
- Designated operators.

The sequence of activities needed to complete this task is as follows:

- Appoint the system manager and assistant. If the Booz, Allen recommendations of Chapter V are adopted, these responsibilities will be assigned to staff within the Executive Secretary's office.

- Tailor the lists of SM and ASM duties described in this report to the individuals selected for these assignments. Modify job descriptions as appropriate.

- Individual offices should appoint their own lead operators and designated operators. Some tailoring of the general duties described for these roles in this report, to fit the circumstances in each office, may be necessary. For example, the lead operator duties may be assigned to one of the designated operators rather than to a non-operator of the equipment. Again, job descriptions should be modified as appropriate. The SM should be provided with the names of the lead operators in each office.

TASK 3-- DEVELOP AND CARRY OUT A TRAINING STRATEGY

Given the initial high demand for OIS training and the limited availability of training opportunities, the challenge of this task is to phase the training among ES/EXRL study offices in the most efficient and equitable manner. The training strategy recommended for the offices has five levels of training priority:

- Level 1--The highest priority should be to provide basic OIS operator training to individuals in each of the offices. Basic operator training encompasses document creation, revision using the powerful editing functions, glossary use,

document storage, and several other fundamental OIS operations. Priority should be given to train the lead operators associated with each of the ES/ EXRL system's workstations. Second priority should be given to the system's designated operators, who are also associated with particular workstations.

- Level 2--The second highest priority training should be to provide advanced function training to operators in the two offices (ES,EXRL) which have the majority of the list processing and advanced function applications that will be run on the OIS. Advanced functions include merge, list processing, and other functions beyond the basic text preparation and editing functions of the OIS, and require special training to operate. Basic operator training is a prerequisite to advanced function training.

- Level 3--The third priority of training should be to familiarize management and officer staff with the OIS capabilities and procedures associated with its use. This training will help promote efficient and appropriate use of the system by staff who generate the majority of the work load to be prepared on the system.

- Level 4--The next priority is to train officer and management staff to access the OIS to print documents stored on-line or on diskette. This training is not intended to be full operator training; rather it is intended to make stored documents accessible to professional staff on weekends or after working hours.

- Level 5--The fifth priority should be to train staff in the basic operator functions who will be infrequent OIS operators. Most professional staff will fall under this category (although in some offices professionals will operate the equipment nearly as much as the secretarial staff).

The training content represented in the recommended five priority levels will be provided in courses conducted by the equipment vendor (Wang Laboratories) and AID's Office of Training (M/PM/TD/OT). The system manager (or assistant) should work with the ES/EXRL component offices to schedule training in accordance with the above priority recommendations. Training should be timed to coincide with system installation.

Training of the system manager and assistant manager is handled separately from operator or officer training. Depending upon the individuals appointed to the SM and ASM roles and their specific role definitions, the training requirements will vary. If, for example, the SM is defined primarily as a policy-making position, with little direct involvement in system operations, the ASM position will naturally assume the day-to-day aspects of system management. In this division of responsibility, only the ASM needs to have a full operational knowledge of the system; the SM need not be more than generally familiar with the system capabilities. If the division of responsibility is such that the SM has greater involvement in system operations, then both the SM and ASM should be fully trained in system operations.

The SM or ASM training consists of a special systems administration course provided by the equipment vendor. The basic operator and advanced function/list processing training are also necessary for the SM and/or ASM. It is recommended that the SM and/or ASM be among the first to be trained in OIS operations, as they will provide technical assistance to all offices as needed. The ASM should strive to be as knowledgeable about how the system functions as any of the lead operators.

TASK 4-- DEVELOP SYSTEM MANAGEMENT PROCEDURES

In order to ensure orderly and reliable operation of the OIS 140 system, a procedures manual should be developed by and distributed within ES/EXRL offices. The manual should provide guidance, to both the operators and staff generating the work to be prepared on the system, on the following:

- Overview of equipment capabilities
- Document preparation process
- System security
- Use of document ID Numbers
- Content of available glossaries
- Library maintenance
- Document back-up and permanent archiving
- Diskette care
- Supply acquisition
- Technical support acquisition.

Overviews of these and other procedural aspects of system operation are presented in Appendix D of this report.

In addition to operating procedures, ES/EXRL needs to establish broader policies for the system in several areas, including:

- Disk library allocation and maintenance
- Establishment of glossaries
- Circulation of system information memos
- Other standards as may be appropriate as the system becomes operational.

Development of the procedures manual will be supported with contractor implementation assistance to ES/EXRL staff. With similar manuals already developed for other AID/W offices, this task can proceed rapidly from a substantial base of material.

TASK 5-- DEVELOP AND IMPLEMENT ADVANCED APPLICATIONS

In two of the offices to be served by the OIS 140 system -- the ES and EXRL offices -- the system will be utilized for a variety of records processing applications, as described in other chapters of this report. For each of these applications an individual design and implementation effort will be necessary. This effort will involve many of the same steps involved in implementing conventional data processing applications including:

- Clariflying system objectives
- Define reports needed
- Define data fields of the record
- Design file structures
- Design file maintenance procedures
- Document list processing specifications
- Develop file storage procedures
- Develop initial files of information
- Prepare documentation
- Provide demonstration/training to users.

It should be noted that even seemingly simple list processing applications will involve most or all of these steps. Thus, before committing to develop a given system concept into a working application, ES/EXRL office management should fully weigh the need for each one.

SER/DM/IM has arranged for contractor assistance for list processing design and implementation work in ES/EXRL. Following completion of this OIS system design study, implementation will begin for the applications described in Chapter IV, based on the conceptual designs described in the chapter. The design and implementation for each system will require active involvement on the part of the client offices with the contractor to ensure the final systems meet expectations. It is advised that

the offices designate, as their working contacts, the individuals who will be responsible for the ongoing operation of the applications. These individuals will work with the contractor to determine system specifications and operating procedures.

VII. COST-BENEFIT ANALYSIS

VII. COST-BENEFIT ANALYSIS

This chapter presents five-year projections of the costs and benefits associated with the recommended OIS 140 system described in Chapter III, and compares them with those associated with the existing word processing equipment in the ES/EXRL study offices.

1. THE PROPOSED SYSTEM IS PROJECTED TO COST $316,000 OVER A FIVE-YEAR USEFUL LIFE

Using the conventional assumption of a five-year useful life for word processing systems, the recommended ES/EXRL OIS 140 system is projected to cost approximately $316,000 over its useful life. (This estimate also assumes the OIS will be acquired through purchase rather than lease. Lease costs for the same length of time would be roughly sixty percent more expensive.) As described in the following sections, the projected OIS costs are greater than the projected costs of the existing word processing equipment now in ES/EXRL offices.

(1) This Cost Analysis Is Based Upon Both One-Time and Recurring Costs for the Two Alternative Systems

A comparison of the equipment-related costs associated with the existing and the proposed system over a five-year period is summarized in Exhibit VII-1, on the following page. The cost elements included in the exhibit are defined below:

- Equipment Lease or Purchase

  - Existing system: the projected lease costs of the word processors not owned by the Agency

  - Proposed system: the projected purchase costs based on government discount rates for the equipment configuration described in Chapter III.

  Start-Up Costs, which are only associated with the proposed system and include:

  - Office furnture
  - Starter supply kit
  - Facilities modifications

EXHIBIT VII-1
Comparison of Existing and Proposed System
Equipment Costs

EQUIPMENT AND RELATED COST CATEGORIES	FIVE-YEAR COST PROJECTIONS	
	EXISTING SYSTEM	PROPOSED SYSTEM
Equipment Lease or Purchase	$38,000	$139,000
Start-up Costs	-0-	20,000
Recurring Maintenance	87,000	147,000
FIVE-YEAR TOTAL	$125,000	$316,000
INCREMENTAL COSTS OF PROPOSED SYSTEM		$191,000

- Recurring Maintenance and Supply Costs

  - The existing system incurs monthly maintenance fees on each piece of equipment. These costs assume a 14 percent annual increase in maintenance fees as well as the purchase of renewable supplies whose costs were calculated by a standard formula.

  - The proposed system incurs the same types of recurring maintenance and supply costs as the existing system.

(2) <u>The Proposed System Is Projected to Have an Incremental Cost of $191,000 Over the Existing Equipment Over Five Years</u>

The cost increment represented by the proposed system is approximately $191,000 over the costs of existing word processing equipment projected over five years. As is evident in Exhibit VII-1, the proposed system is more expensive in all cost categories. Besides the obvious fact that the proposed system includes almost twice as much equipment as the new system, the difference in cost is attributable to the following:

- Some of the current equipment is already owned by the agency, and thus does not count as new lease or purchase costs for the existing system

- There are no start-up costs associated with the existing system

- The maintenance and supply costs are greater for the proposed system because these costs are directly related to the amount of equipment involved.

2. <u>THE PROPOSED SYSTEM IS EXPECTED TO REDUCE THE ANNUAL NUMBER OF WORK DAYS REQUIRED TO PRODUCE THE CURRENT ES/EXRL WORK LOAD</u>

The proposed office automation system is anticipated to produce several near-term, measurable benefits for the ES/EXRL study offices. The three primary quantitative benefits of this system will be:

- Reduction in the days of secretarial effort required to produce the current document work load

- Reduction in the days of staff effort required to proofread the current work load.

- Reduction in the days of staff effort required to perform records processing applications, which are currently performed manually or with limited automated support.

While the proposed system will not change significantly the initial typing time needed to prepare an original page, it will reduce substantially the time required to revise typed pages. Typists need only retype the portions of the document which have been modified and no longer need to retype the whole document, or large sequential sections of it. These basic system capabilities also release officer and other staff time devoted to proofreading. Following this same principle, staff will not need to continue to proofread the entire corrected page but need only proof those portions of the page that were actually modified.

With regard to records processing functions, the OIS will permit more efficient updating, recall, selection, and processing of the various files of records maintained by ES/EXRL offices. Whereas manual search and selection is time consuming, automated search and selection is nearly instantaneous.

As indicated in Exhibit VII-2, on the following page, an estimated 260 work days per year will be saved by the recommended system due to its greater efficiency, compared to the existing level of automation, in the three categories of typing, proofreading, and records processing. Backup for the figures presented in VII-2 is contained in Appendix F.

3. <u>OVER A FIVE-YEAR PERIOD, ES/EXRL COULD POTENTIALLY HAVE 1,000 STAFF DAYS TO RE-DIRECT TO OTHER PURPOSES</u>

The five-year incremental costs and benefits associated with ES/EXRL's use of the OIS 140 are summarized in Exhibit VII-3 on the following page. It is estimated that during this period the release of approximately 1,000 staff days can be realized with the OIS 140. These staff days can be redirected towards other work load priorities in accordance with management discretion. (This assumes that no significant change in work load or work processes would occur during this time period.) The five-year total quantitative benefit statement takes into account the OIS management work day requirements, estimated to be approximately 313 days over five years. In addition to these quantitative benefits, there are substantial qualitative benefits to be derived from the proposed system.

EXHIBIT VII-2
Comparison of Work Days Required For The Existing and Proposed Systems

WORK LOAD CATEGORY	DAYS REQUIRED FOR EXISTING SYSTEM	DAYS REQUIRED FOR PROPOSED SYSTEM	EXISTING LESS PROPOSED
Typing	2,628	2,503	125
Proofreading	490	446	44
Records Processing	659	568	91
TOTAL	3,777	3,517	260

EXHIBIT VII-3
Comparison of Five-Year Costs and
Benefits Associated With the Proposed System

COSTS	FIVE-YEAR START-UP AND OPERATIONAL COSTS
Existing System	$125,000
Proposed System	316,000
Net Incremental Costs	$191,000

MESURABLE BENEFITS	QUANTIFIABLE FIVE-YEAR BENEFITS
Reduced Work Day Requirement for Typing	625
Reduced Work Day Requirement for Proofreading	220
Reduced Work Day Requirement for Records Processing	455
(Less System Administration Work Day Requirements)	(313)
Total	987

QUALITATIVE BENEFITS

Timeliness
Accuracy
Quality
Professional Appearance
New Capabilities

4. QUALITATIVE IMPROVEMENTS IN MANAGEMENT DECISION-MAKING, WORKFLOW AND DOCUMENT PREPARATION CAN BE EXPECTED FROM THE OIS 140

Several qualitative benefits can be expected from the recommended OIS 140 equipment configuration, including greater timeliness, accuracy, quality, and improved appearance in typewritten documents. In addition, the OIS will enable ES/EXRL offices to incorporate several new capabilities into their current information handling procedures.

Although the current word processing equipment in ES/EXRL offices already provides some of these qualitative benefits, the proposed equipment is expected to provide more of these benefits, mainly due to the fact there will be more equipment in the offices. Thus, document turnaround time, format accuracy, quality, and appearance should all be enhanced due to the greater ease of document revision possible with the equipment.

The OIS system will permit ES/EXRL offices to incorporate new capabilities into its information handling procedures in at least two respects:

- List processing will permit automation of several procedures that heretofore were not performed due to the large amount of time they would require if performed manually.

- The shared-logic design of the OIS will permit message transfer among workstations and lays the basis for possible inter-bureau communications at some future point.

APPENDIX A

ADP SYSTEM INTEREST DESCRIPTIONS

1. SYSTEM NAME DESCRIPTION	2. REPORTS TO BE GENERATED	3. DATA TO BE STORED	4. CURRENT STATUS	5. NUMBER OF RECORDS	6. INPUT VOLUME FREQUENCY	7. SOURCES OF UPDATING INFO.	8. DATA MANIPULATIONS
A/AID -- MEETINGS							
To provide a record of the meetings the Administrator holds in the course of his duties, and pertinent information about the meetings. The records must be searchable by various factors.	All reports would be generated through specific inquiries however, the reports would provide the same types of data and in the same format, e.g., all persons met in connection with country X or region y, on topic C. Frequency of reports would be once per week, on average.	. Region(s) . Country(ies) . Issue(s) . Date . Location . Participants . Comments	Conceptual; some meetings data have been recorded, but not systematically	Continually growing at rate of 300 per year; can be archived and later re-input for queries as needed. "Meetings" would comprise the records. Record length is LT 500 characters. Data base is approx. 150-200K characters at maximum	Continually, at rate of 300 added records per year; no updating of records	Forms completed by A/AID front office staff after meeting	Query to produce list of all meetings satisfying specified parameters, e.g., "all meetings in past 6 mos. regarding Honduras".

1. SYSTEM NAME DESCRIPTION	2. REPORTS TO BE GENERATED	3. DATA TO BE STORED	4. CURRENT STATUS	5. NUMBER OF RECORDS	6. INPUT VOLUME FREQUENCY	7. SOURCES OF UPDATING INFO.	8. DATA MANIPULATIONS
A/AID, ES--RECEPTIONS INVITATIONS LIST							
To provide a means of maintaining and selecting names of persons to attend A/AID monthly receptions. The individuals listed would include noted scholars, organization heads, and other VIPs, and would be categorized by program interest, organization, and topical specialty, for selection purposes. Based on a search of the data base, an invitatations list would be prepared.	All reports would be generated by specific inquiry. The search parameters would be selected on the basis of the topic of the reception, e.g., irrigation. Searches would be run at least monthly.	. Name . Organization . Address . Subject Code . Previously Invited	Several lists of names are now used to prepare invitation lists, manually. The lists are incomplete and contain only name and address, for the most part.	Could approach 1,000 names at maximum. Record length is LT 150 characters. Data base, at maximum, would be 150K characters.	Continually, at an estimated average rate of 5 weekly.	Various sources - within and outside of AID would provide names.	Parametric search to produce list of names meeting the specifications set for the search.

1. SYSTEM NAME DESCRIPTION	2. REPORTS TO BE GENERATED	3. DATA TO BE STORED	4. CURRENT STATUS	5. NUMBER OF RECORDS	6. INPUT VOLUME FREQUENCY	7. SOURCES OF UPDATING INFO.	8. DATA MANIPULATIONS
A/AID, ES-- TASK TRACKING							
To provide a record of tasks assigned by the A/AID, and a means of tracking the completion of these tasks. (This system is to be integrated with the ES correspondence system.)	. Regular Status Reports-- - List of tasks due to be completed during next week - List of tasks completed during past week - List of tasks overdue - List of remaining tasks not in the above three categories . Specific Inquiries - Status of particular tasks . List of all records in file	. Task description . Action bureau/ office . Due dates - Interim - Final . Clearance points . Status - Overdue - Alert (due next week) - Pending but not due next week - Completed . Completion dates - Interim - Final	Manual system for tracking; all tasks recorded on Wang 5 now	No more than 250 at any one time Record length is LT 100 characters Data base is approximately 250K characters at maximum	Daily updates; - add 10 - delete 10 - revise 5	Receipt of completed tasks, new tasks, and revisions to tasks trigger updates. No forms involved.	Parametric search: queries to select records meeting report specifications; no complex manipulations required Possible mgt. reports may require manipulation to compute percent overdue by bureau, avg. no. of days overdue, etc.

1. SYSTEM NAME DESCRIPTION	2. REPORTS TO BE GENERATED	3. DATA TO BE STORED	4. CURRENT STATUS	5. NUMBER OF RECORDS	6. INPUT VOLUME FREQUENCY	7. SOURCES OF UPDATING INFO.	8. DATA MANIPULATIONS
A/AID, ES--ES CORRESPONDENCE CONTROL SYSTEM							
To control correspondence flowing to the A/AID and to track the preparation of responses and memos prepared by the bureaus.	. Overdue Items . Alert Items . Completed Items . Remaining Items . Items Forwarded for Signature . Status of Individual Items . Various Management Reports	Various data items for records in each of four system files: . External . Outgoing . Internal . Tasking (The CCS is to be integrated with the A/AID tasking system.) Estimated lengths of records for each of the four files are: . External--600 . Outgoing--500 . Internal--500 . Tasking--500	CCS has a long-established set of manual procedures to control executive correspondence. The desired automation would not significantly alter those procedures.	Assuming that only "live" items are on the file (items not yet signed by A/AID) an estimated 500 items max. would be in the CCS file at one time. As items are signed, they would be archived, thus keeping the CCS file to a manageable size. The maximum expected data base size is approx. 300K characters.	On average, 40-60 records per day would be input into the CCS.	Correspondence analysts and assistants would abstract the correspondence items and input this data for each record. Updates would occur based on responses by bureaus and on progression through the A/AID review points.	Parametric search to produce the reports and to locate individual records would be the most complex function required.

1. SYSTEM NAME DESCRIPTION	2. REPORTS TO BE GENERATED	3. DATA TO BE STORED	4. CURRENT STATUS	5. NUMBER OF RECORDS	6. INPUT VOLUME FREQUENCY	7. SOURCES OF UPDATING INFO.	8. DATA MANIPULATIONS
A/AID, ES-- ES CABLE LOG							
To maintain a record of AID and State cables received by A/AID, and to provide a means of querying the record to identify received cables according to subject, author, or other criteria.	No regular reports are anticipated. Inquiries of the file would be made on an ad hoc basis, usually searching for one or several cables.	. Cable No. . Sender . Addressee . Distribution Made . Subject . Date . Disposition	Manual; log maintained in ES office. All inquiries require manual searching.	Continually growing at rate of 20 per week. Files could be kept small by maintaining only 3-6 mos. of cables on-line; rest could be archived after specified period.	Continually, 20 per week. Little or no updating of records after initial entry.	From cables received.	Parametric search to locate cables meeting specified conditions.

1. SYSTEM NAME DESCRIPTION	2. REPORTS TO BE GENERATED	3. DATA TO BE STORED	4. CURRENT STATUS	5. NUMBER OF RECORDS	6. INPUT VOLUME FREQUENCY	7. SOURCES OF UPDATING INFO.	8. DATA MANIPULATIONS
EXRL-- EXTERNAL GROUPS							
To provide a record of organizations and other entities outside of AID that have an interest in AID policies and programs, in order to utilize this information to maintain working relationships with these groups.	Virtually all reports envisioned would be ad hoc, to produce a list of all organizations) having specified characteristics, etc. as the need for such reports arise.	. Organization Name . Address . Subject, interest, other categorizations . Names of principals, titles . 10-12 other fields TBD	Conceptual; some lists of organizations have been compiled but data is incomplete. System is in conceptual design phase.	Continually growing until reaching an estimated maximum of 600 organizations. Record length will be an estimated 200 characters maximum. Data base size is an estimated 120K characters.	An estimated 5 records per week will be added. An estimated 30-40 updates will be made per week, at maximum. Update character volume will likely be small, as data base is fairly stable.	Multiple sources.	Parametric search is most complex and most frequent function expected.

1. SYSTEM NAME DESCRIPTION	2. REPORTS TO BE GENERATED	3. DATA TO BE STORED	4. CURRENT STATUS	5. NUMBER OF RECORDS	6. INPUT VOLUME FREQUENCY	7. SOURCES OF UPDATING INFO.	8. DATA MANIPULATIONS
EXRL-- COMMUNICATIONS REVIEW BOARD							
To provide a record of all publications reviewed by the CRB and maintain data on CRB actions, etc., with regard to each publication.	Regular reports on CRB activity would occur monthly. Special inquiries would likely occur once per week.	. Publication Title . Publication Type and or Subject Code . Bureau/ Office . Audience Code . Program Area . Cost Data TBD . Circulation No. . CRB Action . CRB Action Date . Other Fields TBD	Manual; currently CRB data is maintained on Wang 5 W/P equipment. No complex manipulations are performed. Some format and design work remain before CRB could be transformed to a L/P ADP, or scaled back to a W/P (sort) application.	Continually growing, with an estimated maximum of 1000 records. There is no clear need to maintain all records on-line, but archiving procedures remain to develop. Record length is an estimated 200 characters. Data base size will be an estimated 200K max.	Input will be at an estimated rate of 20 per month, added bi-weekly. Little or no updating of existing records will occur.	OPM is the main source.	The most complex function required is unclear. Further investigation needed to determine if W/P sorting would suffice for the limited selection required. Otherwise, the application will require L/P. If all records are to be available on-line, an ADP application will need to be developed.

1. SYSTEM NAME DESCRIPTION	2. REPORTS TO BE GENERATED	3. DATA TO BE STORED	4. CURRENT STATUS	5. NUMBER OF RECORDS	6. INPUT VOLUME FREQUENCY	7. SOURCES OF UPDATING INFO.	8. DATA MANIPULATIONS
EXRL-- ADVISORY COMMITTEES							
To provide a record of AID advisory committee members and committee activities	Virtually all reports would be ad hoc and consist of full listings of file contents, or possibly subsets selected based on one or more criteria. Estimated report frequency is less than once per month per each of the five AID advisory committees.	. Name . Address . Organization . Committee Assignment . Period of Term . Expertise . Interest . Meeting Attendance . Other Fields TBD	Manual; currently, committee member data is stored on Wang 5 W/P equipment. No sorting or other manipulations are performed. More clarification on reporting is needed to determine whether this is a W/P or L/P application.	A maximum of 200 records is estimated. Currently, there are 5 committees with 20 members each. The maximum estimated record length is 350 characters. The maximum data base size is an estimated 70K characters.	Monthly input and update is envisioned. A low input volume is expected.	Multiple sources.	The most complex function required is unclear; it will either be sorting or parametric search.

1. SYSTEM DESCRIPTION	2. REPORTS TO BE GENERATED	3. DATA TO BE STORED	4. CURRENT STATUS	5. NUMBER OF RECORDS	6. INPUT VOLUME FREQUENCY	7. SOURCES OF UPDATING INFO.	8. DATA MANIPULATIONS
EXRL-- INVIATIONS LISTS							
To provide a subject/interest classified universe of persons for possible invitations to speeches, receptions, and other Agency functions. (Distinct from A/AID, ES Invitations system.)	Most reports will be ad hoc, for a particular function. Estimated frequency is once per month.	. Name . Address . Affiliation . Telephone . Subject/interest classifications . Dates/Functions invited to . Other fields TBD	Conceptual; currently, some data is compiled on Wang 5; considerable design work is needed, especially for subjust/interest classification scheme.	Maximum number of records is unclear; perhaps as many as 1,000. Record length is an estimated 150 characters maximum. Data base size is 150K at maximum.	Input frequency is unclear for both pre- and post-steady state period.	Multiple sources.	Parametric search is the most complex manipulation required.

1. SYSTEM DESCRIPTION	2. REPORTS TO BE GENERATED	3. DATA TO BE STORED	4. CURRENT STATUS	5. NUMBER OF RECORDS	6. INPUT VOLUME FREQUENCY	7. SOURCES OF UPDATING INFO.	8. DATA MANIPULATIONS
EXRL--TASKING SYSTEM							
To provide a records of, and means of tracking, task assignments and completions for EXRL and interbureau affairs tasks.	Weekly reports on tasks and their status will also be necessary to check on the status of individual tasks.	. Task name . Person assigned . Due date . Comments . Other fields TBD	Manual; tasking system is now operational on Wang 5--for record keeping and revision purposes. No sorting or or other functions are now performed.	Estimated maximum number of records (tasks) is approx. 300. Record length is an estimated 150 charac-	An estimated 50 records will be input daily. Little updating of existing records will occur.	EXRL	Sorting appears to be the most complex function required. Thus W/P will provide sufficient manipulation power.

1. SYSTEM NAME DESCRIPTION	2. REPORTS TO BE GENERATED	3. DATA TO BE STORED	4. CURRENT STATUS	5. NUMBER OF RECORDS	6. INPUT VOLUME FREQUENCY	7. SOURCES OF UPDATING INFO.	8. DATA MANIPULATIONS
EXRL-- CONFERENCES ATTENDED							
To provide a record of all upcoming conferences to be attended by Agency staff.	Bi-weekly reports will be prepared, indicating upcoming conferences and conferences recently attended.	. Conference name . Attendee . Date . Location . Subject/Purpose . Bureau	Manual; currently, this data is on Wang 5 and is compiled in bi-weekly report. No manipulation is currently performed.	The maximum number of records is an estimated 150 at any one time. This will depend on archiving practices. The maximum record length is estimated at 150 characters.	Input frequency will be several times weekly, as input forms are recieved.	Current sources of updating info are forms completed by the bureaus. Greater standardization is needed in these forms.	More work is needed to determine whether parametric search or sorting is the required manipulation.

1. SYSTEM NAME DESCRIPTION	2. REPORTS TO BE GENERATED	3. DATA TO BE STORED	4. CURRENT STATUS	5. NUMBER OF RECORDS	6. INPUT VOLUME FREQUENCY	7. SOURCES OF UPDATING INFO.	8. DATA MANIPULATIONS
EXRL-- CANDIDATE PERSONNEL							
To provide a record of candidates for Agency appointment or direct hire.	Monthly regular report on activity. Ad hoc inquiries to identify individuals meeting specified criteria.	. Name . Address . Other Identifying Information . Area of Interest or Expertise . Other Fields TBD	Conceptual; currently a partial list of names has been compiled. This system will likely be too large for word processing system application; design of a mainframe application will likely be necessary.	An estimated 1000 or more records will be maintained in the completed system. The estimated record length is 350 characters. The estimated data base size is at least 350K characters.	An estimated 40 records per month will be added until the system data base reaches a maintenance level. Updates will occur daily, in an unknown number.	Multiple sources of input.	Parametric search is most frequent and complex function.

1. SYSTEM DESCRIPTION	2. REPORTS TO BE GENERATED	3. DATA TO BE STORED	4. CURRENT STATUS	5. NUMBER OF RECORDS	6. INPUT VOLUME FREQUENCY	7. SOURCES OF UPDATING INFO.	8. DATA MANIPULATIONS
LEG-- CONTRACTS AWARD DATA To receive notification of contract awards to domestic organizations that are above a specified amount. Contracts will include both AID/W and O/S awards.	At present, reports are envisioned to be ad hoc, generated for each award and containing data on only that award. A longer-range option envisioned is to maintain a file of all individual awards that would permit aggregation and cross-sectional analysis.	. Contractor . Amount . Address . Summary of contract objective . Type of contract . Contract No. . Project Desc. . Project No. . Awardee Contact . Subcontractor Names . Period of Contract . Misc. other data	Manual Currently, CM provides LEG with AID/W contract data as contracts are awarded. O/S missions were instructed via cable to notify LEG of awards. The procedures are not fully in place, and there is no assurance that CM and O/S missions will be able to submit notifications on every appropriate contract. A large systems development effort would be required to fully automate the process.	The maximum number of records to be stored would depend on archiving intervals and contract dollar thresholds for notification. Further clarification on system is needed to estimate file size.	Input frequency, as file size, will depend on several factors as yet undetermined	Determining how the two data sources, CM and O/S missions, will provide data is one of the key design issues to resolve. CM currently uses a form to submit the data on which O/S missions could use, also. The design challenge is to ensure that all appropriate contracts are captured by the system. Currently, manual procedures are used with uneven reliability, especially O/S.	Parametric search is the most complex manipulation envisioned for the analysis of the file of award notifications.

1. SYSTEM NAME DESCRIPTION	2. REPORTS TO BE GENERATED	3. DATA TO BE STORED	4. CURRENT STATUS	5. NUMBER OF RECORDS	6. INPUT VOLUME FREQUENCY	7. SOURCES OF UPDATING INFO.	8. DATA MANIPULATIONS
LEG-- CONGRESSIONAL DOCUMENTS							
To maintain a record of Congressional documents that are: . available . on order by LEG . received by LEG The file should be queryable by subject and by committee although this is not a pressing need at present.	Reports would be ad hoc, to search for a particular reference or to compile a list of references produced on a particular subject.	. Publication title and brief summary . Subject code . Issuing Committee . Date ordered . No. of copies . Jacknet No. . Misc. other data. The estimated record length is 150 characters.	Manuals. Currently, a manual log is maintained of such documents. Searches for particular references are made manually.	The number of titles runs into the hundres each year. An estimamated maximum file size of 500 records assumes yearly archiving of the file.	Approximately 5 new entries per week are received.	Notifications from the Congress constitutes the updating info source.	Parametric seach is the most complex data manipulution envisoned.

1. SYSTEM NAME DESCRIPTION	2. REPORTS TO BE GENERATED	3. DATA TO BE STORED	4. CURRENT STATUS	5. NUMBER OF RECORDS	6. INPUT VOLUME FREQUENCY	7. SOURCES OF UPDATING INFO.	8. DATA MANIPULATIONS
LEG--PHONE INQUIRIES							
To provide a record of selected phone inquiries made to LEG, and to provide a means of analyzing the inquiries.	Weekly or bi-weekly regular reports would be prepared to analyze the inquiries. Ad hoc file inquiries will also be performed.	. Inquirer . Date of inquiry . Nature of . Disposition . Other fields TBD	Manual; currently a short form is completed for each inquiry warranting a record. These forms are the basis for input to a Wang 5 W/P document, which is analyzed weekly. No complex manipulations are performed now by machine.	The maximum number records is an estimated 100. This number will depend on archiving practices. The estimated records length is 150 characters.	Input will be likely be several times each week, with an estimated 20 records input per week. Little updating of existing records is expected.	A form completed by the staff person taking the inquiry is the source of the file updating information.	More analysis is needed to determine whether sorting would be sufficient for the analysis required. Possibly, L/P parametric search will be necessary.

1. SYSTEM NAME DESCRIPTION	2. REPORTS TO BE GENERATED	3. DATA TO BE STORED	4. CURRENT STATUS	5. NUMBER OF RECORDS	6. INPUT VOLUME FREQUENCY	7. SOURCES OF UPDATING INFO.	8. DATA MANIPULATIONS
LEG-- CONGRESSIONAL TRACKING							
To provide a system that supports AID-Congressional relations activities by maintaining reference data and by tracking Congressional contacts.	Weekly reports summarizing Congressional contacts; ad hoc reports summarizing various data field content; and inquiries of individual records.	Approximately 150 fields.	Automated; system has been developed with assistance of SER/DM. Currently, the system data base is being automated in preparation for first report runs. System operates on AID IBM 370 mainframe via Datagraphics remote terminal and TI printer	535 records. Record length is approx. 4,900 characters. Total data base is approximately 2.61 megabytes.	Approximately 25-30 new records will be added on an annual basis, with a corresponding number deleted. Updates will be made daily, involving 30-40 records.	Various sources of updating information.	Parametric search: queries to select records meeting specified conditions. Some aggregation and other manipulation of data in records selected.

1. SYSTEM NAME DESCRIPTION	2. REPORTS TO BE GENERATED	3. DATA TO BE STORED	4. CURRENT STATUS	5. NUMBER OF RECORDS	6. INPUT VOLUME FREQUENCY	7. SOURCES OF UPDATING INFO.	8. DATA MANIPULATIONS
LEG-- ACCESS AID BUDGETARY DATA BASES							
To directly access the PBDS data bases maintained by PBDS in order to expedite preparation of the CP and respond to inquiries. LEG would like the ability to query PBDS/CP. (LEG recognizes this capability would require considerable though and development effort and thus is a "long-term" interest.)	Reports would include a range of program and organizational aggregations of updated budget allocations. These would not be expected to differ substantially from the reports/updates generated by PBDS/CP presently.	No new storage capability beyond that of the current CP subsystem is envisioned.	Currently, PPC is responsible for CP data generation, based on bureau updates and central programming decisions. LEG receives the CP data from PPC, and coordinates with PPC to produce CP revisions.	N/A because LEG desires assess only.	N/A	N/A	• Parametric search • Arithmetic Functions • Possibly, more complex manipulations.

APPENDIX B
WORK LOAD DOCUMENTATION

APPENDIX B
WORK LOAD DOCUMENTATION

This appendix presents supporting documentation on which the recommended equipment configuration was based. The number of workstations needed was determined on the basis of work load in two respects:

- Word processing work load, measured by estimated pages produced annually
- List processing operations time needed at a workstation for:
  - Inputting new records
  - Updating existing records
  - Generating reports.

Archival workstation needs were assumed to be one per organizational unit, unless proximity or other factors were considered to necessitate another allocation method.

Printer needs were based on the generally used assumption that one printer will adequately serve two workstations. This general rule was modified by factors such as proximity, space availability, and other office environmental factors.

The following two sections present the quantitative basis for the workstation needs analysis.

1. WORD PROCESSING WORK LOAD ESTIMATES

Exhibit B-1, on the following page, presents the workstation needs based on estimated page counts of documents produced by the offices. Page estimates were obtained from and verified with each office. As a rule of thumb, roughly 10,000 pages are needed to justify one workstation. This ratio is subject to modification due to several factors, including ratio of original to revised pages, proximity needs and organization needs.

2. LIST PROCESSING WORK LOAD

Exhibit B-2, presents the quantitative basis for the list processing work load estimate. The exhibit shows the total estimated hours of workstation availability needed

EXHIBIT B-1
Estimated Workstation Needs
For Word Processing

OFFICE	TOTAL ESTIMATED ANNUAL WORD PROCESSING PAGES*	WORKSTATIONS NEEDED FOR WORD PROCESSING
A	5,456	1**
ES	5,632	1**
EXRL	4,266	1**
LEG	10,694	2**
OPA	32,738	4**
TOTALS	58,786	9**

* Pages prepared for which word processing support is appropriate.

** Not fully utilized workstations, if based exclusively on work load.

EXHIBIT B-2
Estimated Workstation Needs
For List Processing Applications

OFFICE	APPLICATION*	ESTIMATED ANNUAL HOURS OF WORKSTATION USAGE	WORK STATIONS NEEDED ASSUMING 100% UTILIZATION	WORK STATIONS NEEDED ASSUMING 75% UTILIZATION
A	Meetings	33.0		
	Receptions	109.5		
	Correspondence**	600.0	.5	.7
		742.5		
ES	Tasking	250.0		
	Correspondence	2350.0		
	Cable Log	94.2		
		2694.2	1.5	2.0
EXRL	Ext. Groups	206.5		
	CRB	33.0		
	Adv. Comm.	51.0		
	Invitations	29.4		
	Tasking	83.2		
	Conferences	22.3		
		425.4	.3	.4
LEG	Cong. Documents	14.2		
	Phone Inq.	28.1		
	Correspondence**	75.0		
		107.3	.1	.1
TOTALS		3979.4	2.4	3.2

* EXRL Personnel, LEG Cong. Tracking, OPA Mailings and WDL Indexing Systems assumed to utilize remote ADP terminals.

** Assumes LEG and the Administrator's Office would update the executive correspondence control file via workstation.

for record input, update, and report generation for each list processing application shown. The figures in the 75 percent utilization column are the ones used for the equipment needs estimates.

The totals from Exhibits B-1 and B-2 were the basis for the recommended equipment allocation described in Chapter III.

APPENDIX C

SYSTEM MANAGEMENT STAFF RESPONSIBILITIES

SYSTEM MANAGER

The System Manager has primary responsibility for system-wide management and decision-making. The following lists the main duties performed by the SM with the delegation of the day-to-day activities to the Assistant System Manager:

- Advise senior management of the status of office automation operations and the need for any corrective action.
- Identify, develop and distribute operational procedures under the technical guidance of M/SER/DM
- Revise (as necessary) the operational procedures
- Develop training strategy
- Approve and assess training activities
- Maintain overview knowledge of system operations and document applications
- Serve as the in-house advisor on use of the system
- Oversee the distribution of technical and procedural information within ES and to M/SER/DM
- Resolve work station availability conflicts between offices that cannot be resolved by the offices
- Ensure the preparation of and review the system utilization statistics as required by M/SER/DM (e.g., operation logs) that identify amount of time equipment is in use and the amount of output produced
- Participate with M/SER/DM in operational reviews and post-implementation evaluations, as appropriate
- Participate in a group composed of office automation users, sponsored by M/SER/DM, to identify operational problems and solutions
- Receive M/SER/DM bulletins on office automation topics
- Maintain inventory of installed equipment

- Serve as advisor on equipment configuration modifications
- Consider new features and equipment as they become available
- Help justify equipment changes
- Define and revise (as necessary) the system back-up policy
- Determine and revise assignment of libraries
- Establish and implement the password system.

ASSISTANT SYSTEM MANAGER

The Assistant System Manager supports the SM in managing the system on a day-to-day basis and is the primary system resource to Lead Operators. As such, the position serves as back-up to the SM and is responsible for the duties presented above, as well as for the specific duties listed below:

- Maintain knowledge of equipment operations and document applications
- Serve as the in-house technical expert on the equipment operations of the system
- Provide guidance to equipment users and operators on technical and procedural issues.
- Distribute technical and procedural information within ES
- Coordinate, schedule, and monitor training and provide initial staff orientation
- Maintain the system utilization statistics
- Create and update the library assignments on the volumes of the system disk
- Monitor the space utilization of the system disk
- Notify operators to remove documents from the system disk if space utilization is too high
- Review and approve glossaries for consistency with AID regulations
- Send copies of newly developed glossaries to ES operators and M/SER/DM
- Administer and monitor the password system
- Bring Wang OIS up and take it down as needed
- Serve as an advisor to operators when equipment malfunctions
- Place requests for service or technical support calls as necessary
- Maintain records of equipment problems, amount of downtime, responsiveness of service calls, and Wang service receipts

- Monitor system downtime and coordinate the awarding of downtime credits with M/SER/DM
- Maintain adequate levels of expendable supplies
- Order supplies as necessary
- Determine work stations not "in use" on request.

LEAD OPERATOR

In each office-level organizational unit, one person should be designated the lead operator. The objectives of this role are:

- Serve as the local expert on office-specific system applications and procedures
- Provide a central point of coordination within each office.

The person also works closely with the system manager and the assistant system manager.

The principal responsibilities of the lead operator are to:

- Provide system orientation to office staff
- Recommend revisions to existing operational procedures to the assistant system administrator
- Check supply levels at work area
- Notify the assistant system manager of supplies needed
- Determine equipment malfunctions
- Contact assistant system manager to secure service
- Maintain knowledge of document applications and system operations
- Test new equipment
- Monitor the recording of system utilization statistics for the workstation
- Submit utilization statistics required by SER/DM to the assistant system manager.

APPENDIX D

PROCEDURES

PROCEDURES

The following sections provide definition and some discussion of major operating procedures which need to be developed for the Wang OIS 140. This information may be used as the foundation for development of an OIS policy and procedure manual.

(1) Location of Equipment

This is a listing of each location, the equipment installed, and the system (port) number for each workstation and printer. The numbers for the printers are especially important because an operator can use them to direct to printing a document at another location if desired.

(2) Scheduled Hours of Operation

The assistant system manager routinely brings the system up and takes it down at specific times each day. The hours the system is available for use should be specified.

(3) Names and Overview of System Management and Operations Staff

This is a listing of staff in key OIS roles and an overview of the responsibilities of each role:

- System manager
- Assistant system manager
- Lead operators
- Designated operators
- Other trained operators

This information establishes whom to contact for specific questions, comments, or tasks.

(4) Overview of Equipment Capabilities

This is a listing of the key features and functions the equipment provides to help the staff understand what can be done. Examples of key capabilities include:

- Largely on-line disk storage
- Ability to create a back-up (duplicate) copy of a document on diskette
- Expandable off-line storage
- Powerful editing
- Easy recall of stored repetitive text, formats, and instructions through glossaries
- Protection of documents from unauthorized access via assignment of passwords
- Shared access to designated documents
- Mathematic functions
- Hard copy printing
- Automatic paper feeding
- Creation, maintenance, and output of simple files
- Ability to sort (reorder) information alphabetically and numerically in ascending and descending order.

(5) Use of Document ID Numbers

The document ID number is the way the system easily retrieves a particular document. Therefore, it is important that the author and operators keep track of these numbers. To facilitate this tracking, the following steps should be taken:

- Develop a "Document Identification" form to transmit the ID number.
- Instruct the operators to attach the completed form to the document when it is typed and returned to the author.
- Instruct the author to return this form with the document when revisions are submitted.

Adherence to this procedure eliminates wasting operator time searching for the correct document.

(6) Content of Available Glossaries

Glossaries are created on the equipment to instantly retrieve commonly used words, phrases, and/or instructions. A list of glossaries available and a brief description of each should be provided. This list serves as a basis for processing work and a stimulus for identifying new glossary applications. Any suggestions for new glossaries should be discussed with an operator so that development can take place.

(7) Standard Revision Marks

A list of standard revision marks helps create consistency throughout the offices and facilitates ease in understanding what revisions are desired. A sample list is provided in Exhibit D-1, following this page.

(8) Establishment of Document Priorities

The workstations will be shared by several operators. Occasions will arise when there is a conflict. When this occurs, there are two available choices:

- Attempt to use another office's equipment
- Make a document priority decision.

If the first choice is selected, the office's lead operator should call the assistant system manager who can use the system control functions to quickly determine if any workstations are currently idle or turned off. Assistant system manager can then contact the lead operators for these workstations to determine the length of time the workstation may be available and make arrangements for use.

If an operator does not want to go to another location or another location's equipment is not available, a work priority decision must be made by the lead operator, in consultation with the office director or his/her designee if needed.

(9) Library Availability

Each office and division within an office is assigned a specific library for the on-line creation and storage of documents. Other libraries should not be used without system manager approval.

EXHIBIT D-1

STANDARD REVISION MARKS

SYMBOL	DEFINITION
ital	set in italic
bf	set in boldface
—	hyphen
∨	superscript or superior (as in πr^2)
∧	subscript or inferior (as in H_2O)
∧ or ∨ / ∨ ∧	centered (⋄ for a centered dot in
∧,	comma
∨'	apostrophe
⊙	period
; or ;/	semicolon
: or ⊙:	colon
∨"	quotation marks
(/)	parentheses
⊏/⊐	brackets
ok/?	query to author: has this been set as intended?
⊔	move up or move down
no ¶	no paragraph
⊐ ⊏	centered matter
cap + lc	capitalize first; lower case remainder

MISSILES AND SPACE

EXHIBIT D-1(2)

STANDARD REVISION MARKS

SYMBOL	DEFINITION
⌇ or ⌇ or ⌇	delete; take it out
⁀	close up; print as one word
⁀	delete and close up
^ or > or <	caret; insert here something
#	insert a space
eq #	space evenly where indicated
stet	let marked text stand as set
∩	transpose, change order the
/	used to separate two or more marks and often as a concluding stroke at the end of an insertion
⊏	set farther to the left
⊐	set farther to the right
═	straighten alignment
‖ ‖	straighten or align
⊗	imperfect or broken character
□	indent or insert em quad space
¶	begin a new paragraph
sp	spell out -- 5 lbs. as five pounds
cap	set in capitals (CAPITALS)
sm cap or S.C.	set in small capitals (SMALL CAPITALS)
lc	set in lowercase (lowercase)

(10) Library Maintenance

Libraries are designed to keep active documents on-line and accessible. Each operator should either delete or file to diskette any document that is not active.

(11) Guidance For Filing Documents To Diskette

When a document is filed to diskette, it no longer exists in the library. However, it can be retrieved at any time. Any document that has not been accessed or printed in the past two weeks should be filed to diskette.

When a new document is created, a "Document Summary" screen appears. Operators should always complete the following entries:

- Document Name
- Operator
- Author.

Every two weeks, the lead operators should request that each designated operator print a list of documents processed on his or her workstations. The date the document was created, last revised, or last printed will appear on the list. Check with the author to determine if any documents not accessed in the last two weeks can be deleted. If deletion is not approved, file the document to diskette to make space available in the library.

The assistant system manager monitors the status of on-line storage weekly. If the percentage of disk utilization is high, lead operators are asked to file documents to diskette. In this case, the office director's, or his/her designee's, discretion must be used to determine which documents should be removed from the libraries and stored on diskette.

(12) Back-up Policy

All documents are created and stored automatically in a library on the system disk. However, some important documents should be copied (back-up) onto diskette. When documents are copied, they exist in two places, on the disk and on the diskette. If the system should go down, the diskette could be taken to another system or standalone unit to process the document.

The following criteria should be used to determine whether a document should be backed-up:

- Document length over ten pages
- Document being prepared to go outside the office
- Request for back-up from author.

If a back-up copy of a document exists, each time the document is revised the new version should replace the old version on the same diskette.

(13) Care of Diskettes

Diskettes have valuable data recorded on them. The following tips help avoid damaging them:

- Do not expose to sunlight or heat.
- Store in their jackets or envelopes.
- Do not touch the exposed areas.
- Keep magnets far away.

Other tips are available from Wang.

(14) Glossary Origination

Operators create new glossaries as suggestions are made or needs are addressed. When this occurs, the description of the glossary content and use should be sent immediately to the system manager, who is responsible for the distribution of technical information throughout the offices. The information about the new glossaries is then circulated so that all operators can benefit. A copy is also sent to SER/DM for possible circulation throughout AID.

(15) Circulation of System Update Information

Periodically, Wang provides system update information. In addition, technical (e.g., new glossary) and procedural updates are generated within the offices. The system manager is responsible for distributing this information. Any shortcuts or useful information discovered should be given to the system manager for distribution.

(16) Circulation of SER/DM System Bulletins

SER/DM issues periodic bulletins to offices with Wang equipment to convey useful information. The system manager circulates this information within the offices if it directly applies to the document preparation functions being performed.

(17) Supply Acquisition

The maintenance of adequate supply levels is the responsibility of the assistant system manager. Requests for supplies should go to the office's lead operator who forwards the request to the assistant.

(18) Technical Support Acquisition

The system manager and assistant system manager are the in-house experts on the use of the equipment. Requests for technical support should go to them. If they are unable to provide assistance, the Wang customer support person is called and if necessary, an appointment for technical assistance is scheduled.

(19) Maintenance Support Acquisition

The assistant system manager is the inhouse advisor when equipment malfunctions. Requests for maintenance support should go to this person. If a malfunction is determined, the Wang customer service representative is called in to make the repair.

(20) Scheduling Follow-on Training

All operators are initially trained on the basic word processing and glossary functions. Depending on need, selected operators also receive advanced function training. Operators should periodically check the equipment capabilities list to determine if they could benefit from the use of any advanced functions. If so, consult the assistant system manager to schedule the desired training.

Since Wang periodically upgrades its software, the offices may add new equipment and the system manager may recommend additional training for operators to senior management.

(21) Recording Equipment Utilization Statistics

A log should be designed to accumulate utilization figures. Utilization figures are kept for all word processing units, including any equipment maintained in addition to the OIS workstations. This log can also serve as a means of reserving equipment. The lead operator monitors the log to make sure all equipment use is recorded. The entries in the log should follow SER/DM guidelines which include:

- Name of person typing
- Office of person typing
- Amount of time workstation used
- Number of original or revision pages produced.

The lead operators send the previous week's logs for their office's equipment each Monday to the assistant system manager who maintains utilization statistics for each workstation. These reports are regularly reviewed by the system manager prior to submission to SER/DM to assess performance, make needed adjustment and identify significant operational problems as early as possible.

APPENDIX E

OUTLINE OF OIS TRAINING MANUAL

TRAINING

The OIS training manual for ES/EXRL could be divided into three major chapters:

- General Information
- Procedures
- Equipment Operating Instructions.

The sample of the possible content of these chapters is outlined in Exhibit E-1, on the following two pages. Chapter II of this training manual includes the same information as the procedures manual each staff member is given as a system reference guide. In addition, Chapter II contains references to equipment operating instructions when necessary to perform a function. Chapter III, Equipment Operating Instructions, includes references to:

- Wang OIS Operators Guide (Version 2H, October 1980)

- Wang supplemental manuals

- Exercises developed by ES/EXRL showing the use of the operating instructions in performing daily functions.

Once the training manual is developed, it becomes the foundation for training both system users and operators. Chapters I and II of the manual contain the information that should be presented during the orientation sessions to all system users to introduce the system. Each staff member should leave the orientation session with a copy of the ES/EXRL procedures manual, which specifies the topics also included in Chapters I and II of the training manual. These orientation sessions provide all the necessary information for the system users.

However, those staff members who are either designated operators or plan to use the equipment directly require additional information. These trainees should use the training manual in conjunction with the equipment to develop the desired skills.

As trainees progress through the training manual, they are expected to read Chapters I and II. Although the information in these chapters is the same data that should be presented to the entire ES/EXRL staff during orientation sessions and is included in the procedures manual, it is important to read these chapters to learn the equipment operating instructions necessary to perform specified procedural functions. Chapter III requires them to read the chapters of the Wang manual, perform the exercises included in the chapters, and then perform the supplemental ES/EXRL-specific exercises. Proper use of Chapter III requires tailoring to address specific operator needs and the availability of a trainer (e.g., the assistant system manager or a lead operator) to monitor progress, answer questions, and review concepts.

EXHIBIT E-1

Outline of OIS Training Manual

I. GENERAL INFORMATION

1. Objectives of the system
2. Overview of equipment capabilities
3. Objectives of the training manual

II. PROCEDURES

1. Location of the equipment
2. Scheduled hours of operation
3. Names and responsibilites of equipment trained staff
4. Establishment of document priorities
5. Use of document ID numbers
6. Standard revision marks
7. Glossaries
   - Content of those available
   - Origination
8. Libraries
   - Availability
   - Maintenance
9. Diskettes
   - Back-up policy
   - Guidance for filing documents
   - Care
10. Support Acquisition
    - Supplies
    - Technical
    - Maintenance
11. Circulation of System Information
    - Updates
    - SER/DM bulletins
12. Scheduling on-going training
13. Recording equipment utilization statistics

III. EQUIPMENT OPERATING INSTRUCTIONS

1. Basic Concepts
   - Wang OIS Operator Guide
     - Chapter 1--A Wang Office Information System (OIS)
     - Chapter 2--System Description
     - Chapter 3--Basic Instructions
     - Chapter 4--Word Processing
     - Chapter 5--Creating a Sample Letter

- Chapter 6--Create, Print, and Edit a Memo
- Chapter 7--Create, Print, and Edit a Letter
- Chapter 8--Create, Print and Print a Four-Page Brochure

. ES/EXRL Exercises

2. Printing and Special Operational Feature Concepts
   . Wang OIS Operator Guide
     - Chapter 9--Printer Playout
     - Chapter 10--Special Print Functions
     - Chapter 16--Special Operational Features
   . ES/EXRL Exercises

3. Diskette and Indexing Concepts
   . Wang OIS Operator Guide
     - Chapter 11--Document Filing (Archival)
     - Chapter 12--Document Index
   . ES/EXRL Exercises

4. Advanced Concepts
   . Wang OIS Operator Guide
     - Chapter 14--Utilities
     - Chapter 15--Glossary Functions
   . Supplemental Manuals
     - Glossary
     - Mathematic Support Package
     - System Security
     - List Processing
     - Document Merge
   . ES/EXRL Exercises

APPENDIX F

BACK-UP FOR ESTIMATED WORK DAYS RELEASED

BACK-UP FOR ESTIMATED WORK DAYS RELEASED

Exhibits F-1, F-2 and F-3, on the following pages, provide the detailed analysis of the estimated annual workdays to be released as a result of the improved and additional capabilities offered by the OIS 140 over the existing equipment used by the study offices. The three areas in which this analysis was conducted include:

- Typing work load which is performed by support staff
- Proofreading of the typed work load which is typically performed by both professional and support staff
- Data processing input, update, and report generation which is performed by both professional and support staff.

Several assumptions were used in the analyses presented in the exhibits as to compute the benefits to be realized in each area. These include:

- The documents produced on either the existing equipment or the OIS are primarily textual in nature
- An average workday contains approximately 420 minutes, or seven hours.

Exhibit F-1 presents the estimated number of workdays required to produce the study offices' document preparation work load on both the existing equipment and the OIS 140. Elements of the exhibit include:

- Estimates of the total typing work load -- original and revision pages
- Estimates of the original and revision pages for the applicable word processing work load as presented earlier in Chapter II
- Daily typing production rates (using office automation support or typewriters) which are derived from National Archives and Records Service (NARS) standards.

EXHIBIT F-1
Comparison of Annual Typing Workday Requirements

ALTERNATIVE	DOCUMENT CATEGORY	NUMBER OF PAGES		DAILY PRODUCTION FACTOR		DAYS OF EFFORT REQUIRED
		ORIGINAL	REVISION	ORIGINAL	REVISION	
Existing Equipment	Word Processing	18,765	22,935	19	49	1,456
	Standard Typewriter	12,510	15,290	20	28	1,172
OIS 140	Word Processing	26,419	32,367	19	49	2,051
	Standard Typewriter*	4,821	5,893	20	28	452

RECAP

	Annual Workdays
Existing Equipment	2,628
OIS 140	(2,503)
TOTAL	125

* Portion of current typing work load which would not be produced on word processing equipment.

The estimated number of typing workdays required is obtained by dividing the work load by the estimated daily production factors.

The analysis reveals that the OIS could potentially release 125 workdays annually from greater efficiency in automating the study offices' current work load. This results from the conversion of existing (applicable) work load produced on standard typewriters to the advanced word processor.

Exhibit F-2 presents a comparison of the proofreading workday requirements for both the existing equipment and the OIS. These estimates were developed using a methodology similar to that employed in estimating the typing requirements in Exhibit F-1 and include:

- Work load estimates of (total typing) original and revised pages

- Estimates of original and revision pages for the applicable word processing work load as presented in Chapter II.

Workday requirement estimates were developed using the following assumptions:

- Materials processed on office automation equipment or typewriters require the same amount of time to proof as typed original pages require against pages written in longhand.

- Office automation equipment reduces the time required to review revision pages by 90 percent of the original proofreading time since only the revisions must be checked. Pages revised on typewriters require 50 percent of the original proofreading time to review against the edited draft pages.

Application of these assumptions indicates a potential 44 annual workdays which the OIS could release from current proofreading requirements.

Exhibit F-3 presents the estimated number of workdays required to operate the data processing applications work load under existing procedures and OIS. Elements of this exhibit include:

Estimated annual hours for both record input and update and report generation

EXHIBIT F-2
Comparison of Annual Proofreading Workday Requirements

ALTERNATIVE	DOCUMENT CATEGORY	NUMBER OF PAGES		ESTIMATED PROOFREADING TIME/PAGE (MINUTES)		DAYS OF EFFORT REQUIRED
		ORIGINAL	REVISION	ORIGINAL	REVISION	
Existing Equipment	Word Processing	18,765	22,935	5	0.5	250
	Standard Typewriter	12,510	15,290	5	2.5	240
OIS 140	Word Processing	26,419	32,367	5	0.5	354
	Standard Typewriter*	4,821	5,893	5	2.5	92

RECAP

	Annual Workdays
Existing Equipment	490
OIS 140	(446)
TOTAL	44

* Portion of current typing work load which would not be produced on word processing equipment.

EXHIBIT F-3
Comparison of Annual Data Processing Workday Requirements

ALTERNATIVE	CURRENT STATUS	ESTIMATED HOURS INPUT/UPDATE	REPORTS	TOTAL	DAYS OF EFFORT REQUIRED
Existing Equipment	Manual	3,971.80	240.00	4,211.80	602
	Semi-Automated	329.60	70.92	400.52	57
OIS 140	Automated	3,679.50	299.90	3,979.40	568

RECAP

Existing System	659
OIS 140	(568)
DIFFERENCE	91

Days of effort required which is obtained by converting the estimated total hours into workdays.

This analysis reveals the potential to release approximately 91 workdays annually through improved records storage and retrieval and report production capabilities and reduced input/update effort.