PN-ABR-096

ENERGY EFFICIENCY AUDIT REPORT

ALMATY HEATING SYSTEMS ENTERPRISE
Almaty, Kazakhstan

International Resources Group, Ltd.
Washington, D.C.

June 1993

PN-ABR-096

ENERGY EFFICIENCY AUDIT REPORT

ALMATY HEATING SYSTEMS ENTERPRISE (AHSE)
Almaty, Kazakhstan

INTERNATIONAL RESOURCES GROUP, LTD.
1400 I Street N.W., Suite 700
Washington, DC 20005
tel: (202) 289-0100
fax: (202) 289-7601

U.S. Energy Efficiency & Market Reform Project
New Independent States Task Force
U.S. Agency for International Development
Washington, DC 20523

June 1993

TABLE OF CONTENTS

Page

Acknowledgements v

Executive Summary 1

1. Background 3
   1.1 Project Origin and Rationale 3
   1.2 Participating Entities and Roles 4
      1.2.1 Audit Process 5
      1.2.2 Equipment Procurement and Installation 5
      1.2.3 Seminar 5
   1.3 Background on Kazakhstan 5
   1.4 Audit Methodology and Scope 9
   1.5 Completed Activities 10

2. Description of Facilities within the Almaty District Heating System 11
   2.1 Heat Production (Thermal Generation) 11
      2.1.1 Thermal Energy Station #1 (TES-1) 11
      2.1.2 Thermal Energy Station #2 (TES-2) 11
      2.1.3 Management and Organization 12
      2.1.4 Operation and Maintenance 12
   2.2 District Heating System 12
      2.2.1 Management/Organization/Staffing/Customers 23
      2.2.2 Distribution System/Peaking Plants 27
   2.3 End-Use Systems 27
      2.3.1 Industrial Customers 27
      2.3.2 Commercial Customers 29
      2.3.3 Residential Customers 30

3. Description of Audited Facilities 34
   3.1 System Slice Audit 34
      3.1.1 General Description and Scope 34
      3.1.2 Production and Peaking Plant 34
      3.1.3 Distribution System 37
      3.1.4 End-User Customer Systems 40
         1. Industrial Customer: Almaty Carpet Factory 40
         2. Commercial Customer: Pepsi-Cola Bottling Plant 43
         3. Residential Customer: Almaty Municipal Authority 45

   3.2 General (Total System) Audit 48

4. Findings and Recommendations 52
4.1 General 52
4.1.1 Mixing Station 52
4.1.2 Boilers 52
4.1.3 Insulation 52
4.1.4 Instruments and Measurements 52
4.1.5 Cost Accounting and Performance Criteria 53
4.1.6 Long-Term Energy Outlook and Policy 53
4.1.7 Underlying Social and Economic Problems 53
4.2 System Slice Audit 54
4.2.1 Concept of the Free Market System 54
4.2.2 Revolutions in Energy Billing 54
4.3 Low-Cost Equipment Recommendations 54
4.3.1 Recommendations made by AHSE 54
4.3.2 Recommendations made by AGTKE 57
4.3.3 Recommendations made by the IRG Energy Audit Team 58
4.4 Potential for Replication 59
4.4.1 At the Systems Level 59
4.4.2 At the National Level 60

Appendix I IRG Energy Questionnaire

TABLES AND FIGURES

Table 1.	Energy Production Levels in Kazakhstan (by fuel type)	8
Table 2.	Kazakhstan Energy Consumption (1991 million tons oil equivalent/year)	9
Table 3.	Thermal and Electric Generation Capacity - Almaty, Kazakhstan	12
Table 4.	Industrial Heat Tariffs for Almaty (Jan. 1991 - Feb. 1993)	28
Table 5.	Commercial Heat Tariffs for Almaty (Jan. 1991 - Feb. 1993)	30
Table 6.	Residential Heat Tariffs for Almaty (Jan. 1991 - Feb. 1993)	33
Table 7.	Operations Chart for Boiler KVGM-100-150C at the New Western District Boiler House	36
Table 8.	Contractual Hot Water Demand - Almaty Carpet Factory	41
Table 9.	Contractual Hot Water Demand - Brewery Compound	44
Figure 1.	Kazakhstan: An Overview	6
Figure 2.	Organizational Chart of AlmatyENERGO Enterprise	13
Figure 3.	Flow Diagram of Heating System Make-up Water TES-2	14
Figure 4.	Existing and Proposed AGTKE System Pipeline Network	17
Figure 5.	Flow Diagram Heating Network Mains - AHSE	19
Figure 6.	Simplified Scheme TES-2 Heating System	21
Figure 7.	Organizational Chart of AHSE	24
Figure 8.	Flow Diagram Pumphouse No. 8	25
Figure 9.	Flow Diagram Typical Multi-Unit Facility Automated Heat Supply Substation	31
Figure 10.	Flow Diagram of Almaty Central Thermal Distribution Station	38
Figure 11.	Organizational Chart of Almaatagorteplokommunenergo (AGTKE)	46
Figure 12.	Flow Diagram Heating Sub-Station Scheme Multi-Unit Residential Building	49

ACRONYMS AND ABBREVIATIONS

AGTKE	Alma-Ata Municipal Authority (Almaatagorteplokommunenergo)
AHSE	Alma-Ata Heating Systems Enterprise
A.I.D.	Agency for International Development
atm	atmospheres
b/d	barrels per day
Btu	British thermal unit
° C	degrees Celsius
Gcal	gigacalories
GJ	gigajoules
IRG	International Resources Group
m^3	cubic meters
MT	metric ton
MW	megawatt
NIS	Newly Independent States
MOE	Ministry of Energy and Fuel Resources, Republic of Kazakhstan
NMP	Net Material Product
rb	rubles; unit of currency in NIS countries. As of May 1993, 820 rubles = US $1.

ACKNOWLEDGEMENTS

The International Resources Group (IRG) District Heating Audit Team for Kazakhstan would like to express sincere thanks to the management and technical staff of the Almaty Heating Systems Enterprise (AHSE) and its distributor, the Almaty Municipal Authority - Almaatagorteplokommunenergo (AGTKE). Extensive preparation for and commitment to the audit work by the plant staff facilitated a productive exchange of ideas and experiences in energy management. AGTKE provided valuable assistance to the project by supplying engineers to assist with the energy audits throughout the Almaty District Heating System.

IRG would also like to thank the U.S. Agency for International Development, Newly Independent States (NIS) Task Force, Office of Energy and Infrastructure, for coordinating the activities under the Energy Efficiency and Market Reform Project. It is the hope of the IRG Energy Audit Team that the initiatives implemented under this project will contribute to improvements in energy efficiency and economic development throughout Kazakhstan.

EXECUTIVE SUMMARY

As part of the U.S. Agency for International Development (A.I.D.)-funded Energy Efficiency and Market Reform project, the International Resources Group (IRG) Energy Audit Team visited Kazakhstan in April 1992. During this time, Team members spent approximately one week conducting an energy efficiency audit of various facilities within the Almaty District Heating Systems Enterprise (AHSE) in Almaty, Kazakhstan. The overall purpose of this audit was to assist AHSE in identifying and implementing low- and no-cost opportunities for energy savings. Team members also trained key plant personnel in energy management techniques practiced in the United States.

To accomplish these objectives, the IRG Energy Audit Team collected data at each of the facilities selected for the audit to make informed decisions regarding energy saving opportunities. Data were compiled using plant instrumentation, audit measurements (with A.I.D.-funded infrared thermometers), plant records, and personal interviews. Following the audit, the Team members returned to the U.S. to develop the specifications for, and procure, energy efficiency equipment to be used within the AHSE system to implement the initiatives identified.

Unlike other technical assistance projects, the Energy Efficiency and Market Reform Project is an action-oriented project, designed to demonstrate the potential for energy savings in the Newly Independent States through the implementation of appropriate energy efficiency projects. This audit report is designed to provide the reader with a background against which to view the activities initiated under this project.

Background

Almaty, the capital city of Kazakhstan, has a highly developed district heating system -- unlike any found in the U.S. -- and is unique in both its supply and end-use configurations. The heart of this system is a mixing station which receives hot water from two cogeneration plants. The supply configuration then utilizes this heated make-up water from the warmed cooling water of the steam-turbine condensers at the cogeneration plants.

For end users of system heat, the circulated hot water serves both space heating and domestic consumption functions. Approximately 23,000 to 27,000 m^3 of hot water are pumped through this loop of the system hourly, and as much as 7,500 m^3 of make-up water is pumped through the circulation loop each hour. More than 70% of this hot water is sold by AHSE to one organization, the Almaty Municipal Authority (AGTKE), which in turn distributes the hot water to end-users through its own networks.

As a whole, the system has been relatively inefficient. Due to both institutional and technical factors such as government ownership of the system, energy subsidies, and the legacy of centralized planning, the importance of energy efficiency has long been ignored. Similarly, the billing system used by AHSE, which is based on estimated average use within the entire district, has further eliminated incentives for end-users to implement meaningful energy conservation measures.

Most equipment within the audited facilities is relatively outdated. There are few measuring devices or instruments for monitoring either supply or end-use (demand) energy. On the demand side, little individual metering is installed and operating. Even where monitoring instruments are available, few have been utilized on a regular basis. On the supply side, monitors and controls for automatic combustion are absent from virtually all facilities, and pollution monitoring and control equipment are also nonexistent.

The AHSE and AGTKE have also consistently suffered from a lack of spare parts for plant equipment and an absence of budgetary provisions to upgrade older facilities. These two organizations are now attempting to secure foreign capital to finance the needed improvements.

Audit Findings, Recommendations, and General Outlook

In April 1992, the IRG Energy Audit Team initiated the first segment of the Energy Efficiency and Market Reform Project by assisting the AHSE and AGTKE in improving the operational efficiency of their plants. This segment of the project involved developing specifications for, purchasing, and assisting in the installation of gas analyzers, heat meters, flow meters and other conservation and energy efficiency equipment to demonstrate the potential savings from such instrumentation and controls. To further improve energy efficiency among end-users, the installation of thermostatic valves, and controls and metering devices for residential apartment buildings is also being considered.

The IRG Energy Audit Team examined both of AHSE's distribution systems and found tremendous potential for energy savings in all segments of system operation; for example, the mixer station contains boilers whose only current function is to heat water. There are also opportunities to satisfy the growth in demand for electric power within the system through the cogeneration of electricity. Further, since most hot water boilers within the system are fired by natural gas, they would be better suited for gas turbines with combined cycle capabilities.

The current, artificially low electricity prices and the uncertainty of future natural gas prices and supplies (now imported from Uzbekistan) appear to make investments in combined cycle gas turbines unfeasible in the short-term. Nevertheless, the long-term outlook for this option is very attractive, particularly with the Tengiz and other oil/natural gas fields in northwestern Kazakhstan promising to yield significant energy resources through newly formed joint ventures with Western companies.

Energy conservation, which will be encouraged through the removal of energy subsidies and the institution of rational, individual billing, has the potential to achieve energy savings of 30% among all end-users. On the production side, improvements in efficiency resulting from the installation of modern instrumentation and controls could achieve savings of almost 20%, offering a total reduction of approximately 50% in overall energy use to Kazakhstan district heating systems.

In addition, new privatization laws were passed by the Kazakh government in 1992 to attract foreign companies and to facilitate their investment in the country.

1. BACKGROUND

In the aftermath of the collapse of the Soviet Union, its former republics are faced with a host of economic and political crises, with energy among the most serious. The energy sector has historically been plagued by inefficiencies resulting from subsidized pricing, lack of instrumentation and control for energy inputs, and the overall aging of the sector's infrastructure. However, during the past few years, the perennially inefficient economic system of the former Soviet Union deteriorated further, dramatically decreasing production throughout the region. This situation adversely affected the energy sector by adding production and distribution bottlenecks to the already difficult task of procuring raw material inputs (particularly coal and natural gas) for the generation of electricity and heat.

After the termination of the Soviet Union in December 1991, long-standing inter-republic supply arrangements for energy inputs were disrupted due to political considerations. At that time, it was necessary for most republics to pay for energy supplies with scarce hard currency or through barter, aggravating the cash-flow situation even further. As a result, a number of energy enterprises failed during the 1991/1992 heating season, causing tens of thousands of people to go without heat or electricity for significant periods of time.

1.1 Project Origin and Rationale

The Washington Coordinating Conference of January 1992 -- which included representatives from more than 50 nations and international donor agencies -- recognized the critical nature of these energy issues. To this end, its Energy Working Group developed an action plan to address those problems confronting the Newly Independent States (NIS). As part of this plan, the United States Agency for International Development (A.I.D.) agreed to fund a technical assistance initiative to assist NIS nations in improving the performance and efficiency of selected district heating systems.

One initiative, known as the Energy Efficiency and Market Reform Project, was designed to combine in-plant, on-the-job training with the identification and implementation of no- and low-cost programs to maximize energy efficiency. The specific goals of Component #1 of this project, Heating System Energy Efficiency Improvement, are to:

1) foster better management of energy use in district heating plants by identifying and implementing inexpensive energy efficiency improvements that are cost effective;

2) transfer Western technologies in the conduct of energy audits and in plant management to heating system staff, including instruction in the formulation of financial and technical analyses;

3) provide support, in the form of energy efficiency equipment, to implement these identified options and to improve overall energy monitoring and management; and

4) identify additional opportunities for energy conservation and efficiency.

In each NIS nation, one or two district heating systems were selected as target enterprises for these energy efficiency audits. These systems were selected on the basis of their potential for significant energy savings, the applicability of audit results to similar plants in other countries in the NIS region, and the importance of the system's efficiency and effectiveness in the overall context of the country's economic development.

International Resources Group, Ltd. (IRG) of Washington, DC was chosen to implement the Energy Efficiency and Market Reform Project in Kazakhstan and Kyrgyzstan. IRG Energy Audit Team members first visited the country in March 1992 to discuss energy-related needs with development officials and to develop the workplan for this project, the initial energy activity under the new U.S. Economic Assistance Program for the NIS.

In Kazakhstan, Team members chose to examine the Almaty District Heating Systems Enterprise (AHSE) and its distributor, the Almaty Municipal Authority (AGTKE - Almaatagorteplokommunenergo). Within the system, Team members audited generation, transmission, and end-use facilities; the end-use facilities evaluated included one industrial complex, one commercial facility, and one multi-unit residential building. Given the limitations in project resources, the initial audit of the heating system, which took place in April 1992, lasted approximately one week.

As part of the project, the IRG Energy Audit Team presented a workshop for AHSE management to discuss key, energy-related problems, as well as possible solutions. In addition, Team members presented a brief seminar on the use of economic techniques for evaluating investment options in energy efficiency programs and equipment, as well as providing them with the tools necessary to complete the strategic planning process at the plant level. Finally, representatives of U.S.-based, private-sector energy companies discussed equipment options and financing mechanisms.

Before the Team returned to the NIS in fall 1992, IRG had procured, with A.I.D. funding, the equipment necessary to improve overall energy efficiency and to help prevent failures within the system during the heating season. AGTKE technicians assisted AHSE staff in installing the equipment in the audited facilities.

1.2 Participating Entities and Roles

As mentioned above, the primary organizations involved in the implementation of the Energy Efficiency and Market Reform Project for Kazakhstan include the U.S. Agency for International Development (A.I.D.), AHSE, AGTKE, and the IRG Energy Audit Team. The Ministry of Energy and Fuel Resources (MOE) is overseeing the implementation of the project on behalf of the Government of Kazakhstan.

Mr. Mukhtar Kembaevich Kembaev, Director of AHSE, serves as the General Director of the project for Kazakhstan, with Mr. Anatoly Alexseivich Perelevsky, Assistant Chief Engineer at AHSE, leading the AHSE project team. In addition, Mr. Yuri Eduardovich Airih, Director of AGTKE, directs AGTKE's participation in the Project, and Mr. Altai K. Kadyrjanov, General Director of the Industrial Union of Electrical Engineering of Alma-Ata ENERGO (the holding company for AHSE) serves as overall advisor.

IRG is subcontracting with local Kazakhstan organizations and individuals for technical, logistic and other support services. Finally, private-sector American firms specializing in energy efficiency equipment and project development participate in the project on a no-cost basis, providing additional information on equipment and financing options.

1.2.1 Audit Process

Based on guidelines established by A.I.D., and in consultation with the managerial staff of AHSE and AGTKE, the IRG Energy Audit Team collaborated with AHSE engineers to conduct an energy efficiency audit of the Almaty District Heating System. This audit resulted in the identification and implementation of several energy efficiency opportunities, examined areas where future training of AHSE and AGTKE staff was needed, and classified and prioritized purchases of energy efficiency equipment.

1.2.2 Equipment Procurement and Installation

During mid- and late-1992, IRG purchased all instrumentation and equipment as approved by A.I.D. and arranged for its transfer to Almaty, as well as its subsequent delivery to AHSE and/or AGTKE. The Ministry of Energy and Fuel Resources ensured the equipment passed through customs duty free and was delivered to the appropriate enterprise. During late 1992, the IRG Energy Audit Team returned to Kazakhstan and assisted engineers and technical specialists from ASHE and AGTKE in the installation of this equipment and instrumentation.

1.2.3 Seminar

IRG staff, AHSE personnel, and representatives from the MOE will organize a seminar in Almaty in mid-1993 to discuss and disseminate the results of the joint Kazakhstan-American project. AGTKE staff, relevant Kazakhstan government officials, subcontracting engineers and American suppliers of instruments and equipment will be invited to participate.

1.3 Background on Kazakhstan

The section below briefly describes the relevant geographic, social, and economic conditions present in Kazakhstan. It also presents an overview of the energy supply and demand situation, including recent consumption and production levels.

Geographic, Social, and Economic Background

Kazakhstan, with a land area of approximately 1,050,000 square miles, has a population of 16.5 million. The republic is bordered by Russia to the north, China to the east, and Uzbekistan, Turkmenistan, and Kyrgyzstan to the south. A map which depicts the country and its location within the region and presents additional basic economic data, is shown in **Figure 1** on the following page.

Figure 1.

Kaza hstan: An Overview

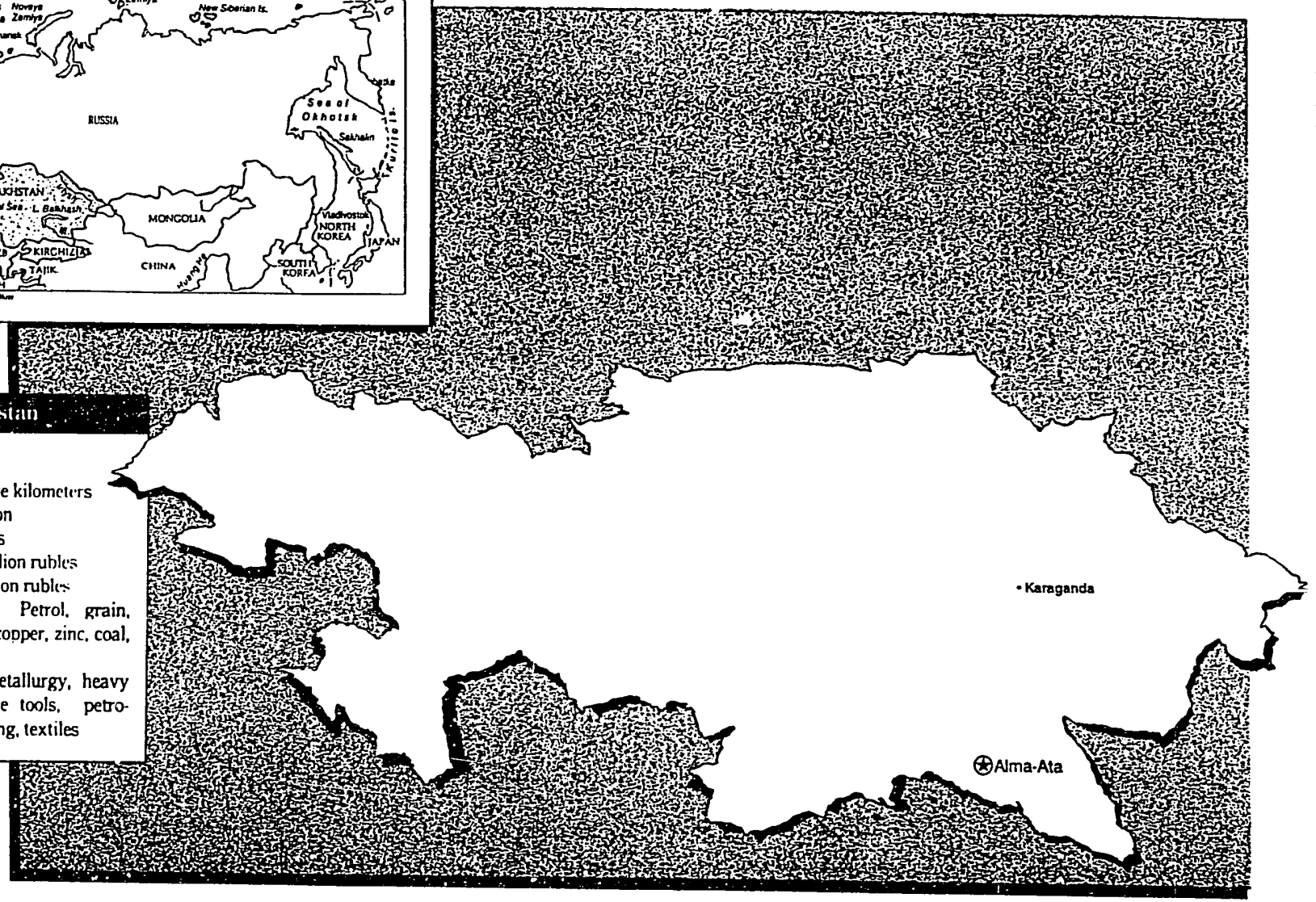

Kazakhstan

Capital: Alma-Ata
Area: 2.7 million square kilometers
Population: 16.9 million
GDP: 92.0 billion rubles
Total exports: 15.8 billion rubles
Total imports: 22 billion rubles
Natural resources: Petrol, grain, chrome, lead, wolfram, copper, zinc, coal, iron ore, wool, meat
Main industries: Metallurgy, heavy machinery and machine tools, petro-chemicals, agro-processing, textiles

ALMA-ATA

BEST AVAILABLE COPY

Major ethnic groups include Russians, comprising 41% of the population, Kazakhs 36%, Ukrainians 6%, and Tatars, who make up approximately 2% of the total population. In addition to the capital city of Almaty, the city of Karaganda, located in the northeastern part of the country, is an important industrial center.

Kazakhstan's major imports include machinery, light industrial goods, chemicals and petrochemicals, oil, and natural gas. The country is a major exporter of several raw materials, including coal.

The measure of economic growth as used in the NIS countries -- Net Material Product (NMP), was 27.8 billion rubles in 1989, representing a NMP growth rate of 1.3% from 1988.

Energy Supply/Demand

Kazakhstan is a resource-rich republic, and produces several primary energy products, including coal, oil, and natural gas. The Ekibastuz and Karaganda Basins in the northeastern region of Kazakhstan are considered to be the third largest coal-producing areas among the NIS. Kazakhstan is also one of only four former Soviet republics that is a net exporter of energy.

Figures for overall energy production in Kazakhstan are included in **Table 1.**

Table 1. Energy Production Levels in Kazakhstan (by fuel type).

Fuel Type	Production Level	Year
Crude oil	526,169 barrels/day	1991
Natural gas	7.89 billion m^3/year	1991
Oil products	350,000 barrels/day	1991
Coal	130 million tons/year	1991

Sources: Ministry of Energy and Fuel Resources and World Bank.

Figures for energy consumption in selected energy subsectors for 1989 are shown in **Table 2** on the following page.

Table 2. Kazakhstan Energy Consumption (1991 million tons oil equivalent/year).

Fuel Type	Consumption Level (million tons oil equivalent per year)
Oil and products	19.4
Natural gas	13.1
Coal	44.6
Nuclear and hydro	1.7
Total Consumption	76.2 **

** Total values due to conversion factors.

Sources: Ministry of Energy and Fuel Resources and World Bank.

Oil and Gas Production and Refining

Significant oil and natural gas reserves are found in the northwestern region of Kazakhstan near the Caspian Sea. The potential for additional oil production depends largely on the development of the relatively deep, high-sulphur deposits in the remote Guryev region, particularly the Tengiz field. Despite the logistic difficulties to be encountered in this region, the tremendous size of the oil reservoirs has attracted significant attention among the international oil industry. Chevron has already entered into a joint-venture agreement with the Government of Kazakhstan to exploit the Tengiz field, and Elf Aquitaine (France) has signed a contract to explore for oil in the Aktyubinsk region. These resources represent an important component of the republic's future energy self-sufficiency.

Kazakhstan has three refineries; the industrial complex in Chimkent processes some 120,000 barrels per day (b/d), while the Guryev facility refines 90,000 b/d, and Pavlodar 150,000 b/d. These refineries partially supply the primary population centers in Kazakhstan, Kyrgyzstan, and southern Siberia via pipeline. Given the high sulfur content of existing oil reserves, the republic's capacity to accomplish this type of refining will undoubtedly have an important impact on the development of its oil industry.

1.4 Audit Methodology and Scope

To accomplish the goals of the Energy Efficiency and Market Reform Project, IRG developed a work plan which outlined the overall methodology and scope for the project; this plan determined that Team members would need to make four trips to the country. The first trip, involving the IRG Energy Audit Team Leader and A.I.D. representatives, served as a definitional mission. Team members conducted the energy audit during their second trip. The third trip allowed Team members to solicit comments on the recommendations and reports generated

through the project, and to assist with equipment installation. In its fourth trip, IRG Energy Audit Team will formally present the results of the project in a workshop format.

The energy audit of the AHSE, the focus of the Energy Efficiency and Market Reform Project, involved two major components: the system slice Audit and the general (total system) audit. The "slice audit" refers to the process of monitoring, measuring, and conducting a detailed energy audit in representative installations within an energy complex (in this case, AHSE). These installations depict a narrow "slice" of the heat production, distribution, and end-use facilities within the system, and allow audit specialists to directly evaluate energy use at specific points throughout the system. This type of examination enabled IRG Energy Audit Team members to draw broad conclusions about the entire system. Given the time and resource constraints of this project, the "slice audit" method served as an effective, efficient way to gain needed insights into the energy consumption practices throughout the entire AHSE system.

Members of the IRG Energy Audit Team also conducted a "general (total system) audit" using information from the "slice" audit, as well as data from plant management and operating staff, various plant records and statistics, and general observations and interviews. This broader audit provided an evaluation of overall energy use and broader management issues.

To facilitate this process, a detailed questionnaire developed by IRG Team members was translated and sent to AHSE prior to the actual audit. This questionnaire prepared the AHSE specialists for the audit program and allowed the IRG Energy Audit Team the opportunity to collect data that would be difficult to compile during the short time allotted for the two audits. A copy of the questionnaire is included as **Appendix I** of this report.

1.5 Completed Activities

In March 1992, the IRG Energy Audit Team Leader, Gerald Decker, completed the definitional mission and submitted his observations and recommendations in the form of a trip report. His findings, as well as those of the A.I.D. representatives who also participated in the mission, served as the basis for the development of the audit methodology and project workplan.

The entire IRG Energy Audit Team travelled to Kazakhstan the following month to conduct slice audits of one heat production system, one distribution system, and three end-use installations. End-use facilities audited included an industrial installation, a commercial facility, and a multi-unit residential (apartment) building. Team members also held detailed discussions with representatives of the AHSE management, key government officials, and relevant independent engineers.

At the end of the week-long audit, Team members presented an informal energy management seminar which focused on transferring Western techniques for the economic evaluation of energy investments and strategic planning. In addition, representatives of U.S. private-sector energy equipment vendors and project developers gave brief presentations on equipment and financing opportunities available to Kazakhstan.

2. DESCRIPTION OF FACILITIES WITHIN THE ALMATY DISTRICT HEATING SYSTEM

2.1 Heat Production (Thermal Generation)

Hot water and industrial steam utilized by the AHSE are provided by several sources. Much of the thermal energy used is supplied by two cogeneration stations (Station #1 and Station #2), while three district boiler houses and one independent boiler house provide the balance.

Although the boiler houses belong to AHSE, the two cogeneration stations are controlled by a separate administrative entity under the authority of the Kazakhstan Ministry of Energy and Fuel Resources (MOE). While these cogeneration stations were not part of the energy audit, a brief description of each is provided below for information purposes.

2.1.1 Thermal Energy Station #1 (TES-1)

TES-1 was completed in 1935, and is comprised of six steam boilers each producing 420 gigajoules (GJ) of power and 160 metric tons (MT) of steam per hour. The station has a total electric power capacity of 145 megawatts (MW), and a total thermal capacity of 920 MW. There are also three turbines in TES-1 which are capable of producing 435 MW of power. Base-load boilers at this station, which generate 40 to 60% of the total power capacity, are fueled by pulverized coal from the Karaganda region. Conversely, the peaking-load boilers are fired by natural gas and heavy fuel oil (mazut).

Approximately 2,500 m^3 of hot water is produced hourly at this station. This hot water originates as cooling water used for the turbine condensers, which is then reheated using double extracted steam to maintain an average temperature of 150 degrees Celsius (° C). The average steam load of this station is 220 MT/hour, with a maximum of 336 MT and a minimum of 105 MT. The hot-water load has a maximum flow of 2,800 m^3/hour and a minimum of 2,240 m^3/hour.

2.1.2 Thermal Energy Station #2 (TES-2)

TES-2, constructed in the 1980s, consists of seven boilers, with individual capacities of 480 GJ per hour. Each of these seven boilers produce 420 MT of steam per hour at a pressure of 140 atmospheres (atm), and 540° C. There are also six turbines in this facility, 2 with a capacity of 110 MW, 3 with 80 MW, and 1 with 50 MW. The total electric power capacity of this station is 510 MW, while its total thermal capacity is 1,000 MW.

This station produces 5,000 m^3 per hour of hot water at 150° C by reheating cooling water from the condenser. Base-load boilers for TES-2, which generate 40% to 60% of the total thermal output, are also fueled by pulverized coal. Mazut or natural gas is burned in the hot water/heating boilers, while natural gas is used in the peaking (hot water) boilers. The average steam load at this facility is 385 MT per hour, with a maximum of 700 MT and a minimum of 624 MT. The maximum hot water load is 5,600 m^3 per hour.

2.1.3 Management and Organization

As stated above, neither station is administratively part of AHSE, but each belongs to a separate entity under the overall authority of the MOE within the republic. AHSE is, however, the primary customer of the hot water produced by these two cogeneration units. Electricity produced by these stations is then supplied to the national power grid, also under MOE jurisdiction. Table 3 below outlines the thermal and electric power production capacity of each of these stations.

Table 3. Thermal and Electric Generation Capacity - Almaty, Kazakhstan

Generation Unit	Thermal Capacity (MW)	Electric Capacity (MW)	Total Capacity (MW)
Station #1	920	145	1,065
Station #2	1000	540	1,540

When extensive interaction between the organizations is necessary, MOE serves as liaison. In addition, both AHSE and the two cogeneration stations are part of a larger enterprise known as Alma-Ata ENERGO (AAE), an administrative entity made up of 18 operating institutions within the country. An organizational chart detailing the entities which comprise AAE is depicted in Figure 2.

2.1.4 Operation and Maintenance

A diagram detailing the pipeline network of TES-2 is shown in Figure 3. Coal used to fuel this station is shipped in by rail from the city of Karaganda, approximately 1,000 kilometers (km) from Almaty. This coal is approximately 40% ash content by weight and has a heating value of roughly 6,000 Btu per pound.

According to estimates by the Ministry of Geology, approximately 700 MT of bottom ash are produced hourly by operational coal boilers in Kazakhstan, creating a total ash accumulation of 14 million MT by January 1992. TES-2 in Almaty alone contributed 4.3 million MT through its production of 0.8 million MT of bottom ash each year.

2.2 District Heating System

The Almaty Heating System Enterprise (AHSE), established in 1960, was constructed in stages as demand grew. Consequently, while some pipelines are relatively new, others are more than 25 years old. The entire AHSE system covers a territory spanning 15 km east to west and 10 km north to south, and serves most of the 1.2 million people currently living in Almaty.

Figure 2.

Organizational Chart of the Alma Ata Energo Enterprise

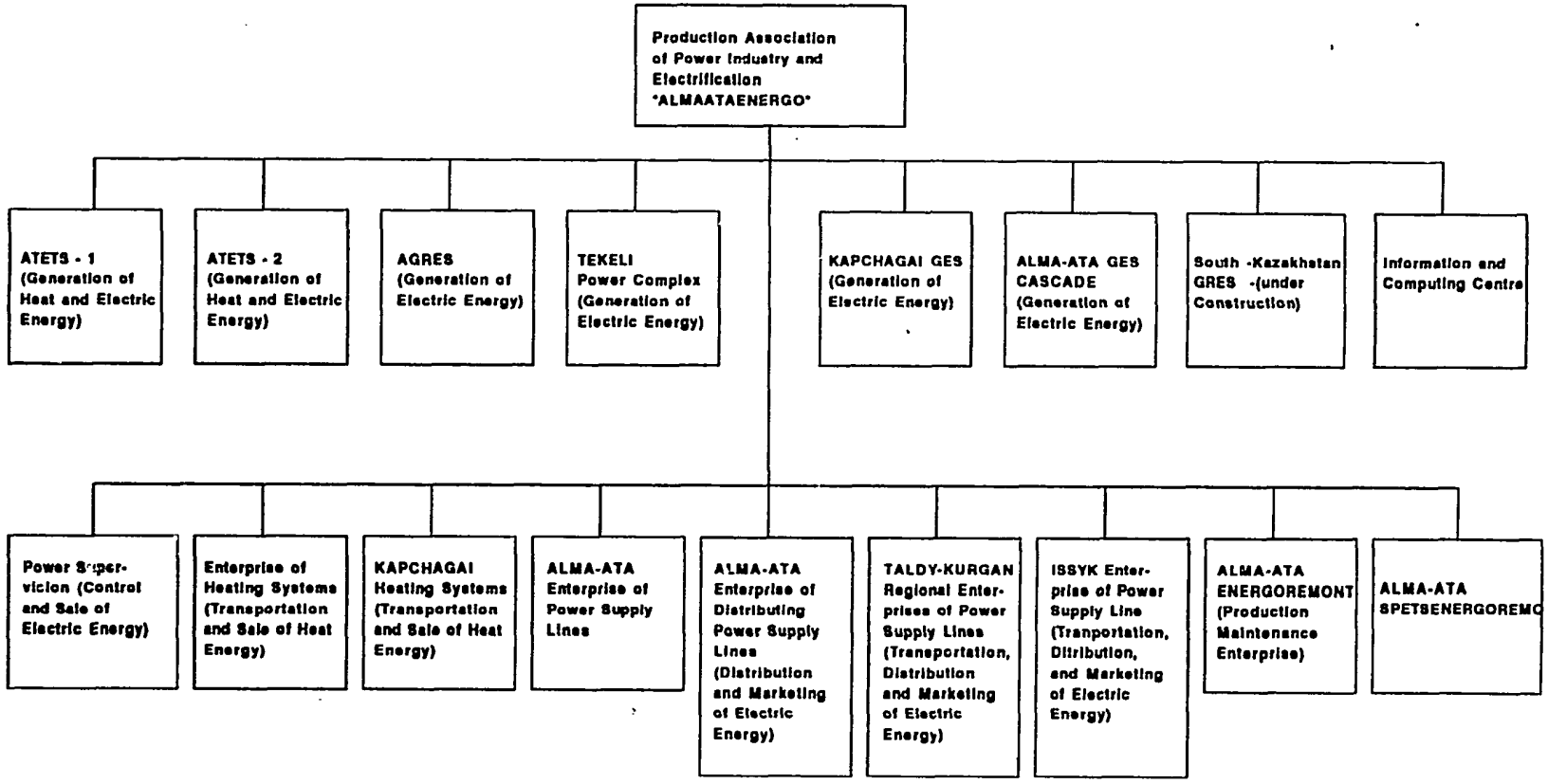

ALMA-ATA

Figure 3.

Flow Diagram
Heating System Make-up Water
Thermoelectric Plant No. 2

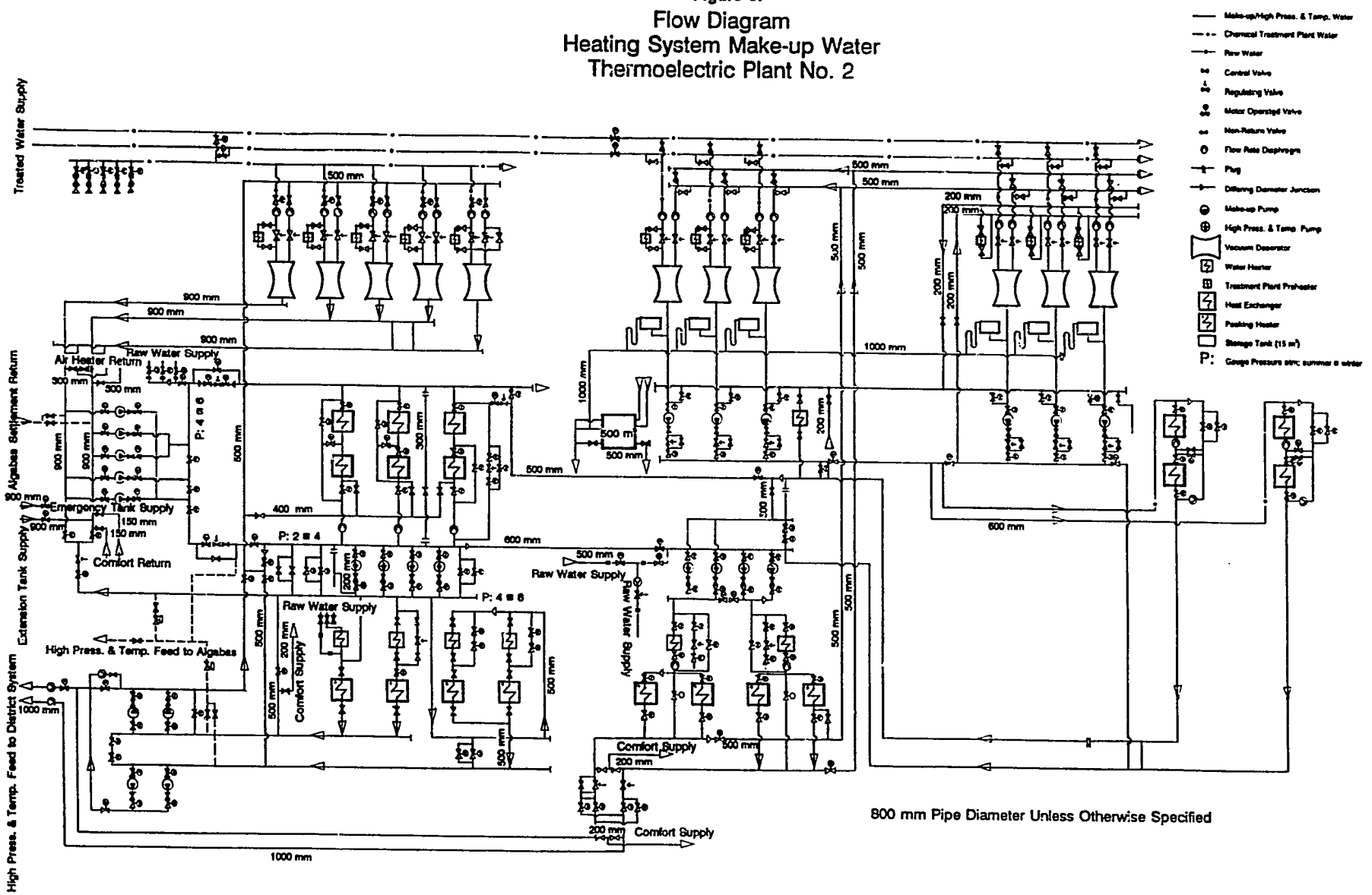

BEST AVAILABLE COPY

The eastern section of the city has historically been supplied by Station #1 (TES-1), with the western portion supplied by TES-2. Maps depicting the layout of AGTKE and AHSE pipeline networks are shown in **Figures 4 and 5**, respectively.

AHSE is unique in two respects. First, its hot water supplies are primarily utilized for space heating and domestic consumption. Second, make-up water for the system is supplied by the cooling water from the condensers which operate in TES-1 and TES-2. **Figure 6** presents a schematic diagram detailing the way in which cooling water from the turbine condensers is heated by steam removed from the turbine extractors to provide the 150° C water necessary for AHSE operations.

At the beginning of its operation, AHSE consisted only of TES-1, then located in the heart of the city. Due to environmental considerations, this station was not developed beyond its initial configuration. As the city grew and new housing was added, additional thermal demand was satisfied through the installation of local district boilers. When the base-load became overburdened, TES-2 was constructed, with these boilers used only during peak demand.

The average annual flow of make-up water at AHSE is approximately 7,000 m^3 per hour, the majority of which (5,000 m^3 per hour) is prepared in Station #2. The total capacity of the hot water storage tanks used to balance the instantaneous peaking demand is some 70,000 m^3, with only 42,000 m^3 of this currently in use. The total heating load capacity of the system is estimated at 5,400 MW. Of this, 2,900 MW of thermal energy is supplied from Stations #1 and #2, and an additional 1,700 MW is provided by the district boiler houses. In 1991, these boiler houses provided approximately 2.2 million gigacalories (Gcal) of thermal energy to the system, while the cogeneration plants provided an additional 7.3 million Gcal.

Problems within the AHSE system include:

- difficulty in localizing damaged or major leakage areas due to the relative size of the system;
- trouble in maintaining the system's hydraulic pressure and temperature levels to operate properly the heating system;
- insulation materials and mechanisms having a different service life than the pipelines, requiring replacement more frequently than the pipelines themselves; and
- lack of automatic instrumentation and control equipment to properly maintain and operate service areas.

The projected annual level of growth for the heating load of Almaty is estimated to be 100 MW to 120 MW. This increase is expected to expand the overall load on the district heating system from its present level of 70% of capacity to 90%. As a result, a new cogeneration plant will needed within the next 10 to 15 years, with an electric capacity of 500 MW to 700 MW and thermal capacity of 1,000 MW to 2,000 MW. Due to environmental considerations, the next station constructed will have to be located outside city limits, approximately 20 to 25 km from the other two stations.

Previous Page Blank

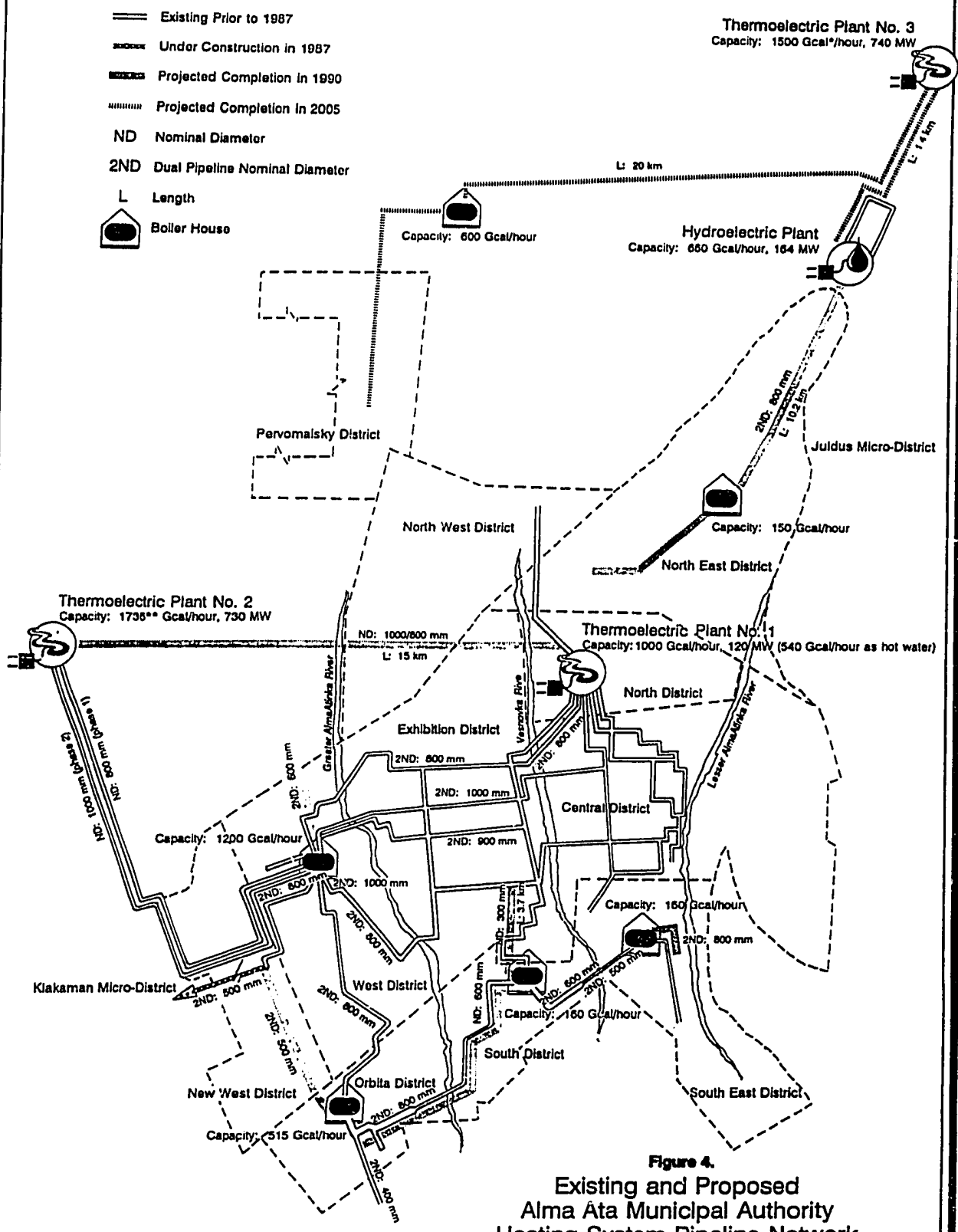

Figure 4.
Existing and Proposed
Alma Ata Municipal Authority
Heating System Pipeline Network

* Gcal = 10^9 cal

** 3 Phase Project: Phase 1 - 500 Gcal/hour, Phase 2 - 1154 Gcal/hour, Phase 3 - 1736 Gcal/hour

BEST AVAILABLE COPY

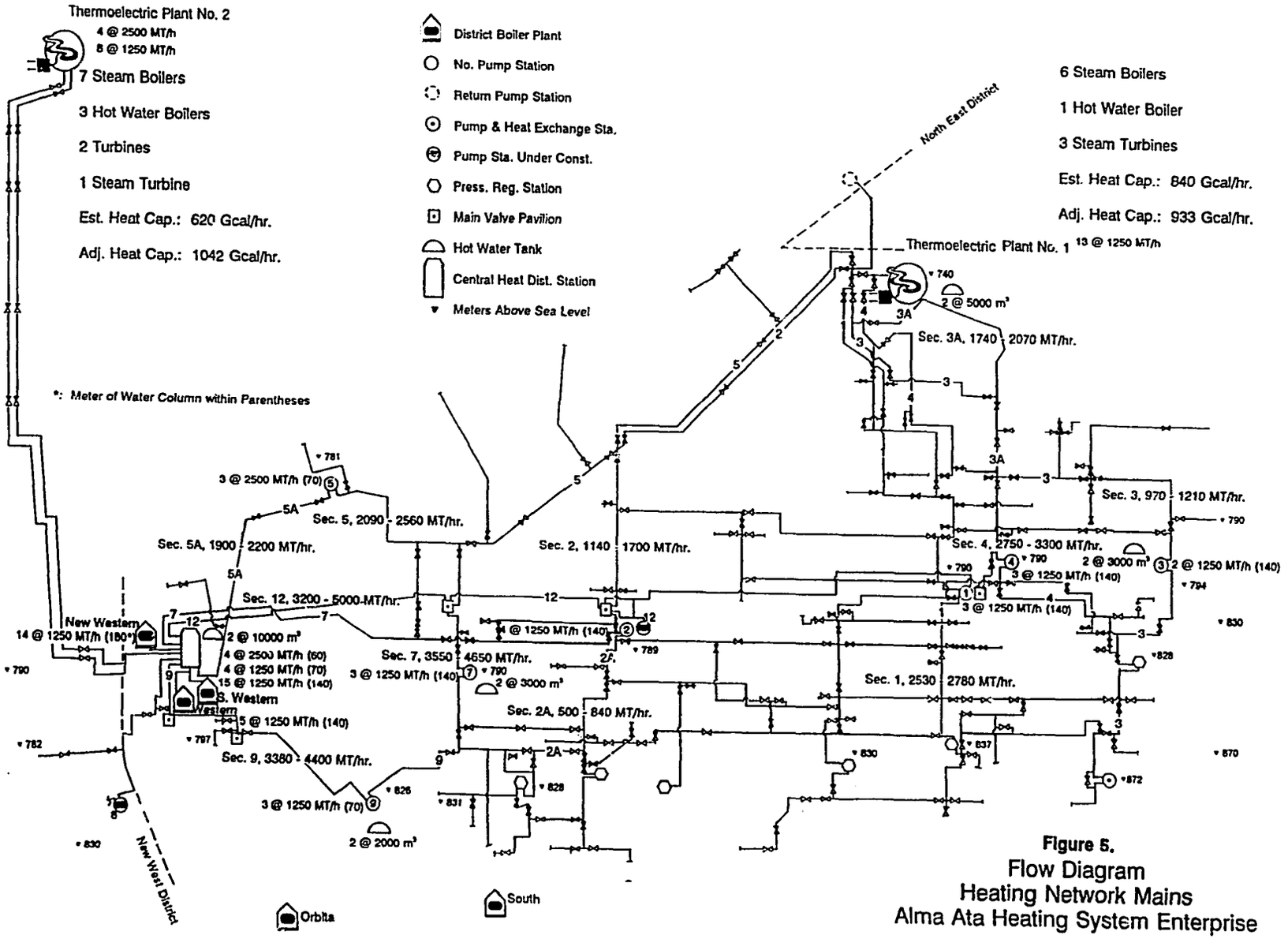

Figure 5.
Flow Diagram
Heating Network Mains
Alma Ata Heating System Enterprise

AAMA-ATA

BEST AVAILABLE COPY

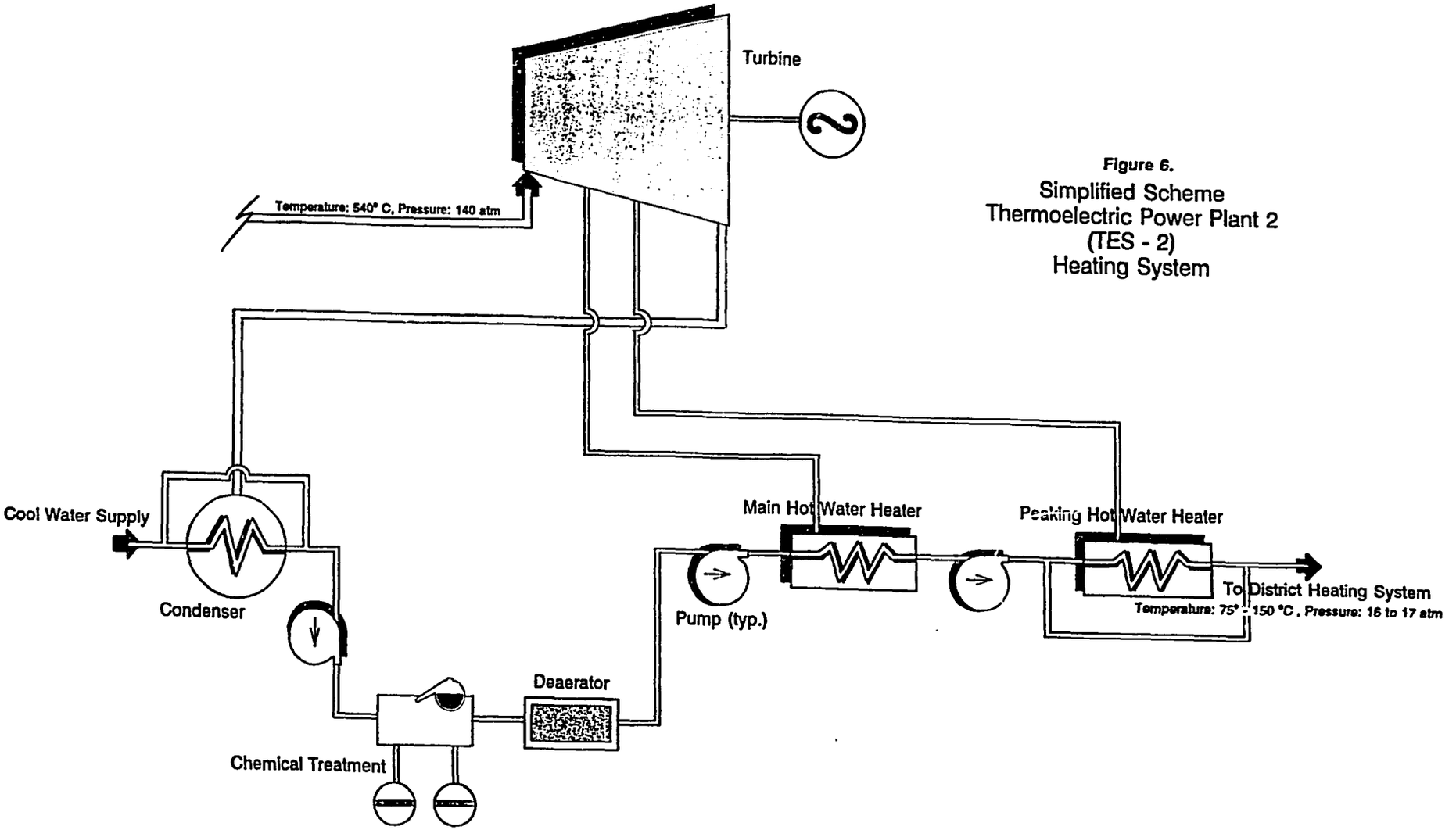

Figure 6.
Simplified Scheme
Thermoelectric Power Plant 2
(TES - 2)
Heating System

BEST AVAILABLE COPY

In the near future, however, AHSE plans to construct an additional district boiler house in the northwestern sector of the city to accommodate the increased demand resulting from a number of new residential areas. This project will involve the construction of a facility with six hot water boilers and four steam boilers.

2.2.1 Management/Organization/Staffing/Customers

The AHSE system, as detailed in **Figure 7**, employs 732 people with an annual payroll of approximately 3.58 million rubles (based on 1991 figures); approximately 270 staff per shift are technical specialists. Its customer base includes 365 industrial enterprises, 706 institutions (offices, hospitals, and schools), 83 non-industrial enterprises, and 258 private residential buildings (houses/flat blocks). The total number of individuals serviced by AHSE is estimated to be more than 900,000.

Although the Repair-Services section completes most in-plant repairs, a separate Electrical Services Group maintains electrical equipment at the pump stations. The primary functions of these pump stations (depicted in **Figure 8**) are to:

- increase pressure in the hot water feeding line to 6 or 6.5 kg/cm^2, and deliver it to the pumps at a capacity of 1,250 m^3 per hour and a head of 140 m;
- deliver return water from various users to a similar regulator, where pressure is maintained at a preset level; and
- fill storage tanks at the stations during those hours when hot water consumption is low (to be returned later to the system when demand is greater), enabling station operators to maintain a stable pressure level in the heating system.

While personnel employed by the operational districts service the heating manifolds and booster pumping stations within their individual district, they do not maintain the automatic controls; this equipment is serviced by the Measurement Services Group. The Transport and Mechanic Services Group handles out-of-plant maintenance and repair duties, and the Repair and Construction Center oversees those parts of the network with small- to average-diameter pipelines. All boiler houses are maintained by their own personnel.

2.2.2 Distribution System/Peaking Plants

In addition to hot water and/or steam supplied from TES-1 and TES-2, three district boiler houses (Western, New Western, and Southwestern) and one independent boiler house (Northeastern) service peak-load needs and major industrial steam customers. These boiler houses range in age from 2 to 30 years, and are fueled by natural gas and mazut. The Western, Southwestern and New Western district boiler houses are comprised of four hot water boilers each, with the Western and Northeastern boiler houses consisting of four and ten steam boilers, respectively.

Previous Page Blank Pgs. 20, 21, 22

Figure 7.
Organizational Chart of ASHE

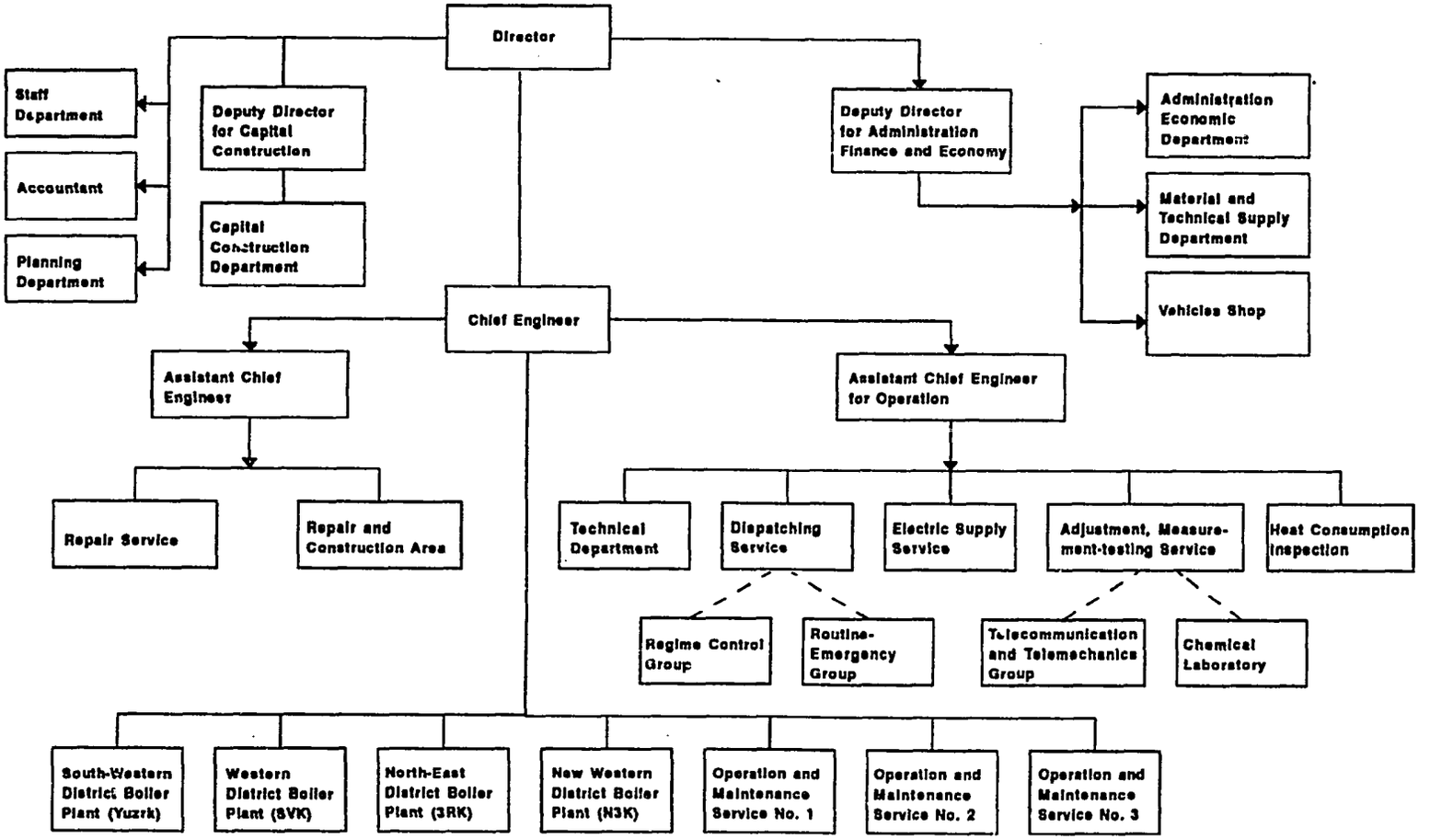

Figure 8.
Flow Diagram
Pumphouse No. 8

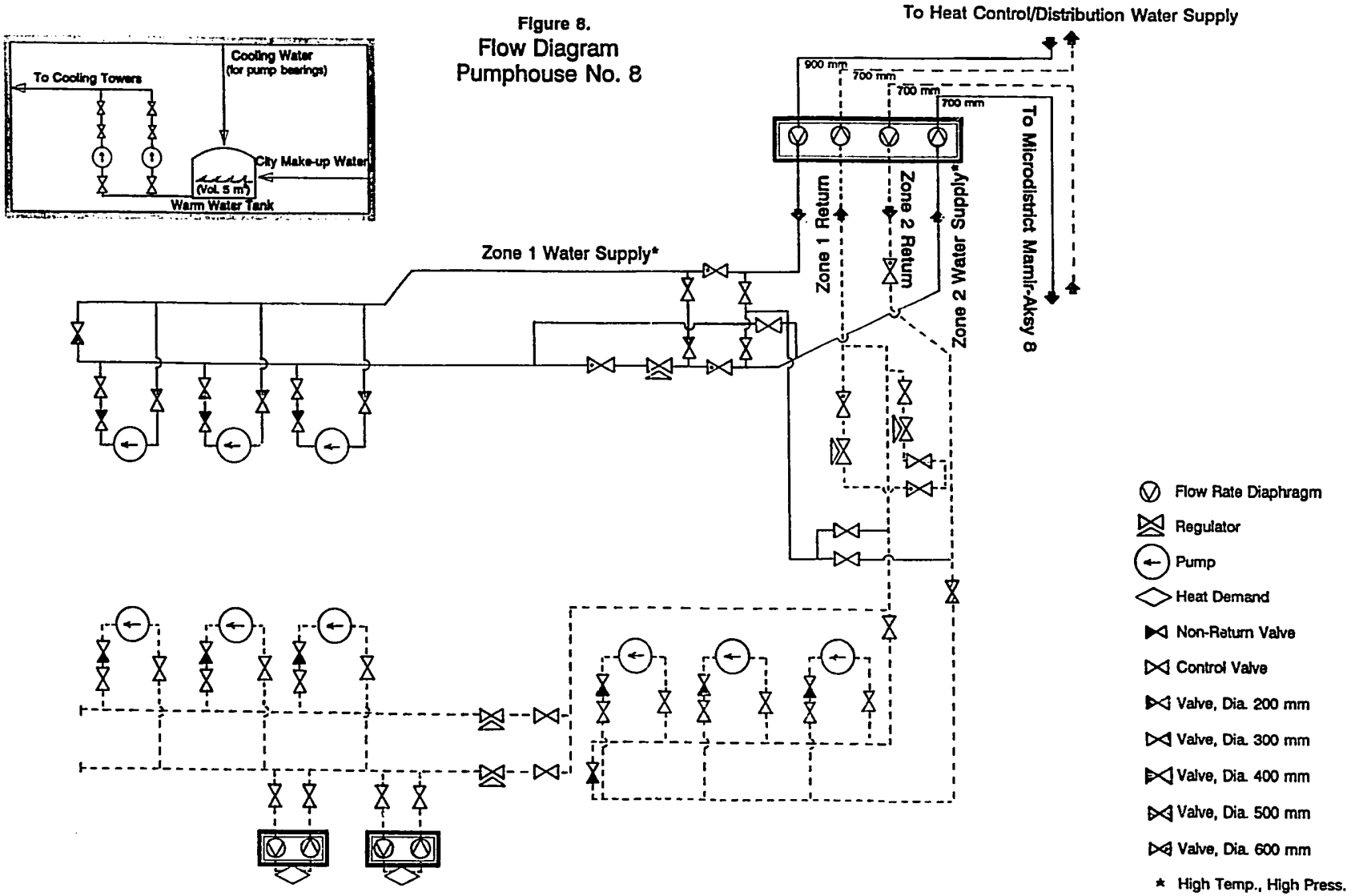

AAMA-ATA

BEST AVAILABLE COPY

Within the system itself, a net drop in elevation of 160 meters exists from south to north. This change is compensated by the use of three hydraulic zones within the network interconnected through automatic breaking nodes and booster pump stations. There are 12 such pumping stations, having a combined capability of pumping 69,000 m^3 of water per hour. Six automatic controls on the hot water pressure lines serve to prevent the backflow often caused by breakdowns in the system. Nevertheless, this elevational change presents certain problems in the overall reliability of the single pipeline, hot-water supply system.

The addition of an automatic control system for the hot water supply made it possible for a single pipeline, hot-water supply system to move from its thermal source (TES-2) to peak demand areas. This single pipeline system needed only two pipes (800 and 1,000 mm diameter) to be laid, rather than a set of six pipes each with a diameter of 1,200 mm. This method of heat/hot water transportation has generated interest in other countries, including Czechoslovakia, East Germany, and Austria. A similar system will be designed for the future Station #3.

Control of system pressure and heating conditions is performed at the AHSE dispatch center, which is equipped with telephones, computers, and telemetric equipment. On the average, 3 to 4 km of the older, small diameter pipelines are reconstructed annually. In addition, annual upgrades are made to 2.5 to 3 km of older pipelines in the heating system, and to 3 or 4 boilers; another 4 to 5 boilers are modernized each year.

2.3 End-Use Systems

This section discusses each of the following end-use systems present (industrial, commercial, and residential) in the Almaty district heating system.

2.3.1 Industrial Customers

As mentioned in Section 2.2.2 above, the AHSE has 365 industrial customers. In all cases, industrial clients are government-owned enterprises, although in the near future some of these enterprises may be privatized. The growth rate for energy demand as currently contracted is approximately 2% annually.

Little data were available regarding the characteristics of typical AHSE industrial customers. In general, all industrial equipment is outdated, and the facilities need varying degrees of repair. Hot water and steam usage among industrial customers is metered by the receiving station, but controls placed on their usage are rare.

To date, few initiatives to improve energy efficiency have been implemented or even considered at industrial facilities in Kazakhstan. This is partially explained by the history of tariff-subsidies, which did nothing to encourage the conservation of energy, since investments in energy efficiency did not have sufficient economic paybacks. Most industrial customers of AHSE, therefore, paid little attention to energy efficiency, since prices were adjusted only once during the thirty year period prior to 1991.

Previous Page Blank

Energy conservation on the demand side is not practiced or emphasized due to state ownership and the lack of individual metering. On the production side, lack of monitoring instrumentation and other energy equipment has limited energy efficiency initiatives.

Heat tariffs/regulations/contracts

Prior to 1991, tariffs for heat and electricity were set by the State Committee on Prices within the framework of the entire Soviet Union. Subsequently, however, tariffs for industrial heat have been determined by the Cabinet of Ministers of Kazakhstan. A breakdown of the changes in these tariffs over time is listed below in Table 4.

Table 4. Industrial Heat Tariffs for Almaty (January 1991 - February 1993)

Date	Tariff (Rubles/Gcal)
Before January 1991	11
January 1991	16
February 1991	23
March-June 1991	42
July-December 1991	34
January 1992	146
February-April 1992	182
May 1992	406
June-October 1992	1,316
November 1992-January 1993	2,106
February 1993	6,320

The Almaty Carpet Factory and the Pepsi-Cola Bottling Plant were selected by the IRG Energy Audit Team for system slice audits. Details on these plants and the observations and recommendations of the Team are presented in Section 3.

2.3.2 Commercial Customers

AHSE has 83 non-industrial commercial enterprises as customers, as well as 706 commercial customers, including offices, schools, and hospitals. The growth rate of energy demand within this sector is approximately 3% per year.

Commercial customers of AHSE generally require utility services for space heating, ventilation, and hot water. However, AHSE delivers hot water only to the "gates" of the commercial installation, while the heat-energy monitoring and auditing instruments needed to monitor efficiency levels are installed at the end-use receiving station. Although only approximately 10% of commercial customers utilize monitoring instruments, all commercial users are supplied with this type of equipment.

Clients in the commercial sector have traditionally been unconcerned with energy conservation due to previously subsidized tariffs outlined in Table 4 above. Price increases since January 1991, however, have caused some commercial facilities to explore options for the development of cost-cutting measures. However, commercial customers, as public sector entities, traditionally have been entitled to heavily subsidized services, including hot water. It is unlikely these institutions are concerned with energy issues, and energy efficiency is a low priority.

Heat tariffs/regulations/contracts

Prior to January 1991, heat tariffs for the commercial sector were set by the State Committee for Pricing of the Soviet Union. Since January 1992, tariff rates for heat energy have been set by the Cabinet of Ministers of the Government of Kazakhstan. This Cabinet has increased tariffs several times for commercial customers (Table 5).

Table 5. Commercial Heat Tariffs for Almaty (January 1991 - February 1993)

Date	Tariff (Rubles/Gcal)
Before January 1991	6
January-February 1991	14
March-June 1991	16
July-December 1991	14
January 1992	60
February-May 1992	71
June-October 1992	110
November 1992-January 1993	220
February 1993	490

2.3.3 Residential Customers

There are 258 residential customers connected to the AHSE distribution system, and 491 residential customers connected to the AGTKE distribution system. These residential facilities, including stand-alone housing and apartment buildings, are owned by a number of entities. Although private homes do exist, most residential buildings serviced by the AHSE and AGTKE belong to either the Ministry of Community Services or a housing authority, or are associated with government agencies or government-owned enterprises. The growth rate for heat demand in the residential sector is approximately 20% per year.

Hot water is supplied to most residential customers for both space heating and domestic consumption. At each receiving substation, instruments for monitoring heat energy are installed, although individual regulation and control of space heating temperature is virtually non-existent. The flow diagram of a typical substation is shown in **Figure 9**.

As mentioned above, the previous energy-pricing system offered little incentive for customers to conserve energy. Moreover, since residential end-users are not individually metered, conservation by specific individuals had little effect on the overall cost and consumption of heat. In general, energy efficiency appeared to be a completely foreign concept to most residential customers. For example, since there are no individual controls to regulate the amount of heat each residence receives, every end-user receives a high level of heat input and regulates the temperature by opening windows.

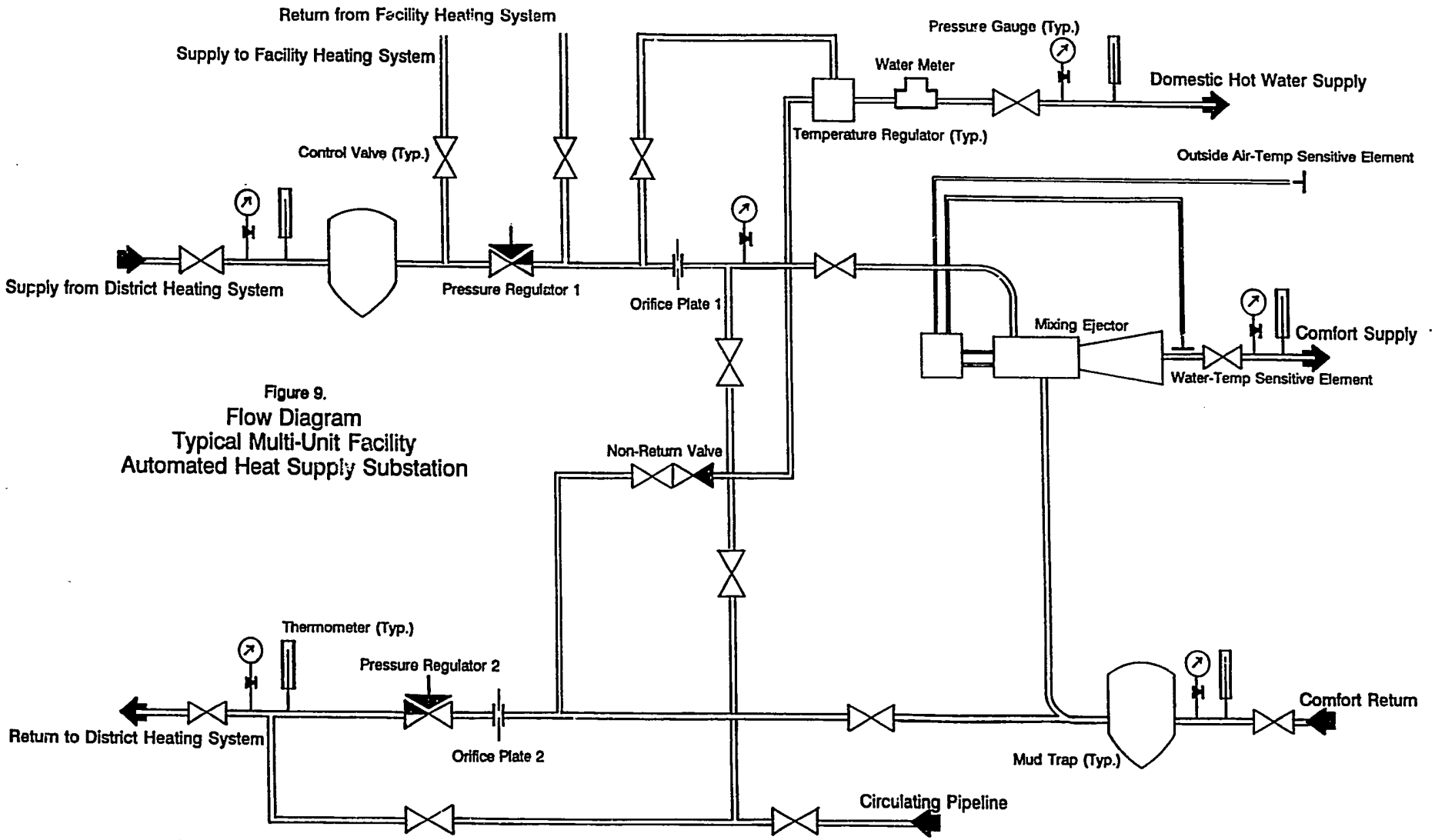

Figure 9.
Flow Diagram
Typical Multi-Unit Facility
Automated Heat Supply Substation

Orifice Plate 1 provides for circulation of District Heating System Supply (high pressure/high temperature) into District Return

Orifice Plate 2 is necessary as back-up to Pressure Regulator 2

AAMA-ATA

BEST AVAILABLE COPY

Heat tariffs

Since January 1992, the tariff rate for residential customers has grown steadily, despite larger price increases among the industrial and commercial sectors. The Cabinet of Ministers of Kazakhstan also regulates both the tariff and contracts with residential customers, and has made corresponding increases in this sector as well (Table 6).

Table 6. Residential Heat Tariffs for Almaty (January 1991 - February 1993)

Date	Tariff (Rubles/Gcal)
January 1991	9
February 1991	15
March-June 1991	13
July-December 1991	22
January 1992	90
February-April 1992	87
May 1992	75
June-October 1992	170
November 1992-January 1993	n/a
February 1993	1,860

3. DESCRIPTION OF AUDITED FACILITIES

3.1 System Slice Audit

This section details equipment within the production and peaking plant, distribution system, and end-use (customer) systems that were part of the system slice audit.

3.1.1 General Description and Scope

The IRG Energy Audit Team conducted a system slice audit of the AHSE complex by visiting selected generation, distribution, and end-use installations within the system, and were assisted by fifteen specialists from AHSE and AGTKE. Team members then divided into three groups to facilitate evaluation of the generation, transmission and end-use installations. IRG Energy Audit Team Leader Gerald Decker led the inspection of the boilers (steam and hot water) at the mixing station; Dr. Tadeusz Swierzawski supervised the examination of the main pump station located at the mixing station; and Frank Wang directed the analysis of two AHSE industrial customers, as well as the audit of the AGTKE distribution system.

3.1.2 Production and Peaking Plant

The IRG Energy Audit Team selected the Central Thermal Distribution Stations of the AHSE as "representative" distribution installations, since these stations are the heart of the district heating system. Primary distribution begins at this facility, with the mixing and conditioning of the hot water accomplished before being pumped out to the pipeline network. Several components of these stations were specifically examined as part of the slice audit, including the hot water boilers, pumps, pipelines and associated insulation, heavy oil and gas burners, and the soot blowing system.

Four boilers of the New Western Boiler House were included in the slice audit. These boilers were originally designed to burn natural gas. However, since the boiler house frequently burns mazut as a substitute due to shortages in the supply of natural gas, these boilers have been re-worked with two sets of burners, one suitable for each type of fuel. These burners are of a rotating type, where the burner sleeve revolves at 5,000 rpm. While mazut has a heating value of only 10,500 - 11,000 kilocalories (Kcal) per kilogram (kg), and a sulphur content as high as 3%, its temperature must be constantly monitored and maintained at 90° C for effective operation. When the fuel is trucked in, its core temperature is approximately 60° C, and is re-heated to 90° C before being fed to the burner. Natural gas, when it is used, is fed into the burner with 2.5 bar pressure. The pressure in the combustion chamber is equal to 0.8 to 1.0 bar.

Two fans service these boilers, one which is a forced-draft model delivering 80,000 m^3 of air per hour, and the other an induced fan, handling 160,000 m^3 per hour of flue gas. The pressure drop across the boiler is currently 5 bars, although the design specifies an optimal pressure drop of no more than 3 bars. Inlet water temperature is 70° C, while outlet temperature is

maintained at 135° C to avoid scale formation within the pipeline as the quality of the water supply deteriorates. Design temperature limits on these boilers are 150° C. The pressure in the tube side is 17 - 18 bar, with a flow rate of 1,250 - 1,400 m^3 per hour. The temperature of the flue gas entering the stack is maintained at 180° - 190° C for mazut, and 160° C for natural gas.

All four boilers within the New Western Boiler House were manufactured in Russia, and the operating crew is quite satisfied with their performance. This facility, however, has experienced problems with tube-side internal fouling, and plant staff have unsuccessfully attempted to find instruments capable of detecting deposit buildup within the tubes. Currently, they detect these deposits only after the tube is broken by listening to changes in the sound waves that are created when water changes to steam.

Boilers are normally operated with an estimated excess air ratio of 1.2, while the design value is 1.08. To date, there is no instrumentation available to monitor the oxygen (O_2), nitrogen oxide (NO_x), or sulfur dioxide (SO_2) content of the exhaust gas. As a result, the combustion efficiencies of these boilers are far from optimal. The operations chart for Boiler KVGM-100 at the New Western district boiler house in **Table 7** on the following page presents current operating conditions.

Steam Boiler Area

Insulation on older boilers within the system was originally installed manually and is in generally poor shape. This insulation was manufactured from asbestos, and there is currently no program to date to replace this type of insulation. Insulation on newer boilers, however, is in much better condition and manufactured from more modern materials.

Boiler Control Room

More than 50% of the measurement and control instruments in the boiler control room were removed from the panel for calibration during the energy audit. It was anticipated that by late summer 1992, testing and re-calibration on those instruments should be completed and the instrumentation re-installed.

Table 7. Operations Chart for Boiler KVGM-100-150C at the New Western District Boiler House.

Parameter Name	Heat Load (Gcal/hr)			
	50	60	70	80
1. City water consumption (t/hr)		1,420		
2. Water pressure at boiler input (Mpa)		1.85		
3. Water pressure at boiler output (kgf/cm^2)		13.4		
4. Water temperature at boiler input (°C)		55		
5. Water temperature in the boiler (°C)	35	42	49	56
6. Temperature of escaping gases (°C)	145	155	180	210
7. Mazut temperature (°C)		85	90	
8. Mazut pressure (Mpa)	0.092	0.115	0.145	0.175
9. Air pressure behind the blower fan (kgf/m^2)	90	145	220	280
10. Oxygen content behind the boiler (%)	3.7	3.2	2.9	2.7
11. Content of three-atom gases (%)	13.6	14.0	14.2	14.4
12. Excessive air behind the boiler		1.2	1.14	
13. Boiler efficiency (%)	92.3	92	90.0	90.7

NOTES: 1. The chart was completed when the outside air temperature was + 2° C
2. Gate valves for secondary air before the boilers are opened fully.

Under normal operating conditions, all instrumentation in the control room is operated manually, with the exception of the safety and protection systems. At the time of the audit, instrumentation installed in the boiler room measured:

- Heat consumption through the boiler;
- Water temperature at both the boiler inlet and outlet;
- Consumption of natural gas;
- Temperature of exhaust gas;
- Water pressure at both the boiler inlet and outlet;
- Oxygen and carbon dioxide content of hot water;
- Air and gas pressure in front of the burners; and
- Vacuum in the boiler combustion chamber.

3.1.3 Distribution System

The Central Thermal Distribution Station is the heart of the distribution system. As shown in the flow diagram presented in **Figure 10**, this station has seven outgoing lines and seven return lines to supply the district heating network. Two lines from TES-2 which supply make-up water are fed by water intake pumps of the New Wester Boiler House and mixer station.

Five of the seven return lines connected to the intake pumps of the New Western and Southwestern Boiler Houses were designed for reheating; similarly, the remaining two lines are fed to the Western Boiler House for this purpose. Heated water from the three boiler houses plus that from TES-2 is delivered through all seven lines to the mixing station for distribution to the network. To maintain and regulate hot water temperature within the requisite range, a bypass line from the discharge header of the supply line pumps directly to the mixing header, circumventing the boiler houses.

When sources fail to supply the required feed water to the Western Boiler House, AHSE relies on a backup water-treatment plant which supplies water at 1,000 m^3 per hour. To balance water circulation and maintain stable operations, storage tanks which currently hold 40,000 m^3 are also available within the network. These tanks are filled at night when demand is low, and discharged during peak demand (daytime) hours.

Insulation

Insulation used throughout the distribution system is manufactured from mineral wool incorporated with a metallic net covering to make the insulation rigid. The service life of pipelines insulated in this manner is estimated to be 25 years; at that point, pipelines are replaced in sections of 8 kilometers each.

Corrosion resistance is assured through the application of polymeric paint on exterior surfaces. Recently, the system received improved coatings for the pipelines that have previously only had military applications.

Surface temperature readings of the pipeline insulation taken by the IRG Energy Audit Team were not unacceptable, even though the general condition of this insulation was less than desired. The basic problem is that insulation is poorly attached to the pipes, creating open air pockets between the insulation and the pipelines. This then results in lower insulation efficiency and ultimately in heat loss during the distribution process.

System Leakages

The total length of the pipeline distribution system at AHSE is 240 kilometers, with individual pipelines ranging from 300 to 1,000 mm in diameter. These pipelines are manufactured of carbon steel at a design pressure of 25 bar, and range in age from 1 to 30 years. Of the total 240 km of pipelines, only 43 km of these are above ground. Underground pipelines are located in culverts, with concrete chambers at major junctions. Pipe insulation is not protected against underground water anywhere within the system.

Figure 10.
Flow Diagram
Alma Ata Thermal Distribution Center

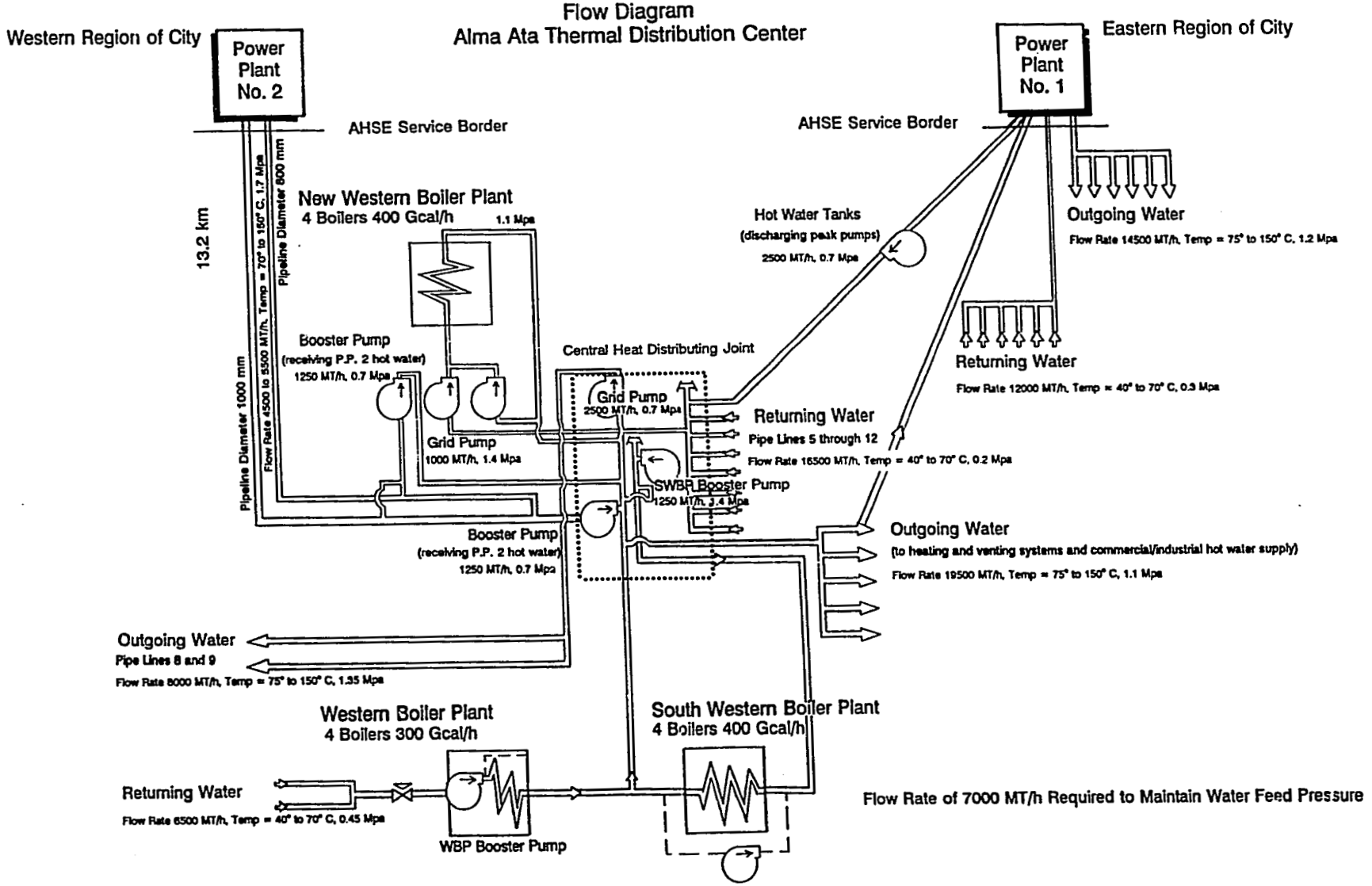

ALMA-ATA

BEST AVAILABLE COPY

Discovery of leakages in underground pipelines is of primary importance to any distribution system; however, AHSE has no instrumentation to detect such leaks. Currently, distribution leakages are estimated at 500 m^3 per hour from a total hourly circulation rate of 23,000 to 30,000 m^3. This loss ratio represents a much larger percentage of total heat loss relative to the losses due to poor insulation. Furthermore, flooding around the pipelines through such leakages contributes to additional heat loss since it adversely affects the insulating ability of the mineral wool. Early detection of leakages should be a priority throughout the entire system.

Controls

The control system within the distribution facility includes both temperature and pressure equipment. All equipment is operated manually, with the exception of emergency and protection devices. The response time of the manual controls is often slow to the extent that corrective action is invariably too late. By AHSE's own estimation, some 3 - 5% of total energy inputs could be conserved if automatic control systems were installed to replace the manual controls. Upon evaluation of data, the IRG Energy Audit Team suggested actual savings could be even higher.

The pipeline network is designed in such a way that any major break in the hot water loop would interrupt the entire distribution system. This type of breakdown could become quite serious if it happened during the winter heating season, and management staff consider improvement in the reliability of this system to be a top priority. As a result, many solutions recommended by the IRG Energy Audit Team are designed to help accomplish this important task.

3.1.4 End User Customer Systems

The following sections present information collected during the representative slice audit of end-use (customer) systems conducted by the IRG Energy Audit Team. These include discussions on the industrial, commercial, and residential facilities selected, and includes data on each facility's insulation, system leakages, and monitoring and control facilities, as well as temperatures taken throughout the system.

1. Industrial Customer: Almaty Carpet Factory

The Almaty Carpet Factory was selected as a representative industrial customer for the April 1992 audit by the IRG Energy Audit Team. This factory, located on a 3-hectare lot within the city, was founded 55 years ago and is the only carpet factory in Kazakhstan. As of April 1992, the factory employed approximately 1,000 workers, 90% of whom were women. The majority of plant staff work in two main shifts, although some shops operate on a three-shift basis. Current production at the plant averages 5,000 m^2 of finished product per day.

The carpet factory is an integrated operation: raw wool is processed and carpets are produced within this facility. Chemical fibers, also used in the plant's products, are purchased primarily from domestic sources. Product quality has been recognized at several international exhibits,

and buyers from other parts of the world have begun showing considerable interest. Export sales have already been made to Iran, and negotiations are underway to begin exporting to Korea and Germany.

Before 1964, all carpets were woven by hand. Since that time, machines have been incrementally incorporated in the process, and are now used throughout the production and assembly lines, replacing "hand made" processes entirely. Machines used in this factory were manufactured in East Germany, Poland, and Kazakhstan.

In addition to space heating and office consumption, the carpet factory utilizes hot water in its process for dyeing natural and synthetic fibers and for air-conditioning its fabric treatment shops. Hot water is purchased from AHSE at 0.7 Mpa pressure and 70° C. At the contracted levels presented in Table 8, annual consumption for hot water would appear to be 5,526 Gcal/year. However, actual hot water consumption was only 3,002 Gcal in 1991, with a steam consumption level of 3,703 Gcal.

Table 8. Contractual Hot Water Demand - Almaty Carpet Factory

Function	Hot Water Demand (Gcal/hour)
Space Heating	1.422
Shop Conditioning	0.694
Process Hot Water	1.286
Technical Hot Water	0.542
Total Hot Water Demand	3.944

It was unclear how the carpet factory is billed for its hot water and steam usage, since the AHSE does not have a meter at the "gate" of this facility. It seemed that billings were based on estimates of consumption made by AHSE engineers.

Steam is also used in the dyeing solution and for drying carpets when the latex backing is applied. This steam is supplied by TES-1 at 1.2 Mpa pressure and 190° C, with a condensate return at the facility of 45%. The contractual demand for steam is 2.8 Gcal/hour, with approximately 9,953 Gcal of steam consumed per year, with a minimum condensate return of 34%.

Insulation

Insulation for the above ground portion of steam and hot water piping within the factory complex is manufactured of rock wool. This insulation is covered with either rigid sheets of chemical fiber that have been coated with a thin layer of aluminum or with flexible [uncoated] sheets of

the same fiber. The IRG Energy Audit Team observed many sections of both the steam and hot water pipes that were poorly insulated. Most visible pipelines had insulation that was partially or completely exposed to the elements, with the covering sheets missing or loosely attached.

Leakages

There were no visible signs of hot water leakages within the plant; this does not mean, however, the plant is leak-free. At the time of audit, the heating season had drawn to a close, and most of the hot water lines used for space heating were inactive. Consequently, leakages were not likely to be evident. There were several places, however, where IRG Energy Audit Team members observed steam escaping within the processing and drying shops. This situation appeared to occur in areas where steam is injected into the solution tanks to keep the temperature regulated, but should be examined more closely.

Controls

At both the hot water and steam receiving station, flow rates, temperature, and pressure levels are metered. Instruments in this station are outdated, and pie charts are frequently used to diagram temperature and pressure measurements. Technicians in the receiving station record these data manually every hour, and manually adjust flow rates of both the steam and hot water feeding lines based on the demands of various shops. These demands are communicated to the receiving station via telephone.

Air Conditioning within the Fiber Shops

Since the maintenance of a constant level of humidity is critical in handling wool fibers, two space conditioners are located in the spinning and weaving shops. One conditioner serves as a humidifier, with the other as a de-humidifier. These two appliances each consume 55 kwh of electricity daily, or approximately 10% of the 4 million kwh consumed by the entire plant each year.

Efficiency Measures Undertaken to Date

Management at the factory have always considered issues related to energy efficiency, but the equipment and processes used in this factory are so outdated that substantial capital would be required to bring the factory up to modern standards. In light of current cash shortages, it is unlikely the plant can become highly energy efficient.

For example, the two space conditioners described above were almost 20 years old at the time of the audit. If high-efficiency appliances were used in place of these conditioners, some 30% of total power, equivalent to 0.6 million kwh per year, currently used to operate the appliances could be saved. Using the average U.S. electricity rate of $0.06 per kwh, savings would equal $36,000 a year. However, when the dollar value of savings is calculated at the April 1992 tariff rate of less than $0.01 per kwh, savings would only total $6,000 annually. Thus, the payback

period would be lengthy, making it an unwise investment with the electricity tariff so low.

At one time, plant management seriously considered constructing a diesel-fired generation station to produce their own electricity since several times during past winters, the plant was forced to shut down due to power shortages. If the plant had its own diesel generator as a backup, such power shortages would have minimal effect on production. However, the capital cost of this project was prohibitive.

2. Commercial Customer: Pepsi-Cola Bottling Plant

The Pepsi-Cola Bottling Plant was selected by AHSE for inclusion in the April 1992 energy audits as a typical commercial end-user within the distribution system. This plant was established in 1982, and uses equipment manufactured in East Germany. It is now a branch of the Pepsi-Cola plant in Moscow, although it was operated as part of a brewery complex until early 1992. At that time, it became a private enterprise and was purchased by the employees. Although plant equipment is quite old, an ample supply of spare parts is available from the Pepsi-Cola Authority in Austria. The local bottling plant pays for these parts by underwriting local Pepsi advertising.

The plant currently operates on one shift due to the shortage of glass bottles. Since there is no such factory in Kazakhstan, bottles are shipped in from Russia. With the current political uncertainty in inter-republic relations, this plant is often unable to receive all the bottles it orders, and moreover, must absorb the cost of approximately 2% breakage per shipment. Thus, the lack of reliability in the supply of bottles combined with the cost/loss of 6 million bottles per year is a significant problem.

As mentioned above, the shortage of glass bottles is the reason the plant has limited production to only one shift per day. Furthermore, this situation has caused the plant to institute the practice of bottle recycling. As of the time of audit, there was no plan to use plastic bottles as a substitute, although this alternative should be considered in the near future if the Russian glass supply situation does not improve.

Steam and hot water consumption are important components of the plant's resource costs. Hot water is used primarily for space heating and internal office consumption, while steam is used for controlling the water bath temperatures in the bottle washing machine. Technological steam for the brewery compound is purchased from TES-1 at 1.2 Mpa pressure and 190° C, with a condensate return of 60%. Conversely, hot water is purchased from AHSE at 0.7 Mpa pressure and 70° C.

The consumption level of these two resources is metered only at the main receiving station for the compound. Thus, it is important for the plant to implement its own metering system to monitor steam and hot water usage. To this end, a substation was built and flow meters ordered. The plant was expected to have its own steam and hot water meters in place by the summer of 1992.

Since this metering was only accomplished at the brewery compound at the time of audit, data on energy consumption at the plant and contracted demand are estimated. For example,

contractual demand for steam within the compound is estimated at 8.4 Gcal/hour, with an annual consumption of 30,820 Gcal, and a minimum condensate return of 60%. Consumption for steam in 1991 was 31,208 Gcal, based on estimated billing records. Estimated consumption levels for the Pepsi-Cola Plant as calculated to determine contracted loads were 1.58 Gcal/hour (389 Gcal/month) for steam and 2.158 Gcal/hour (1,431 Gcal/month) for hot water. Electricity use at the bottling plant is estimated to be 220,000 Kwh/month.

Contractual demand for hot water by function is presented in Table 9.

Table 9. Contractual Hot Water Demand - Brewery Compound

Function	Hot Water Demand (Gcal/hour)
Space Heating	2.000
Shop Conditioning	1.290
Process Hot Water	0.530
Total Hot Water Demand	3.820

On an annualized basis, hot water consumption would appear to be estimated at 10,298 Gcal. In 1991, however, actual consumption was only 8,595 Gcal.

Insulation

Insulation of pipelines leading to the receiving station at this plant appears to be in better condition than that of the carpet factory. Pipeline insulation between the receiving station and the Pepsi-Cola substation was in average condition. IRG Energy Audit Team members did not observe any sections where insulation was missing or obviously damaged.

Leakages

The Energy Audit Team members saw no signs of hot water or steam leakages within the plant during the audit. However, the use of hot-water space heating was being minimalized as the heating season nearing its end.

Controls

Since steam demand is steady, there is no need for hourly dispatches regarding demand nor an elaborate control system at the substation. Instruments that are currently in place to measure and record temperature and flow rates are sufficient for plant requirements. Portable

contact thermometers and infrared thermometers, purchased as part of the A.I.D. Energy Efficiency and Market Reform Project, were used during the audit by AHSE technicians to measure the surface temperature of inlet steam pipes at the substation.

Steam is primarily used to control the temperature of cleaning solutions in the bottle washing machine. Water to be used for the bottle-washing process must first flow through pipelines that have been fitted with a filtering device. The first bath, which contains the alkaline solution, is kept at 70° C. The temperature of the second bath is maintained at 50° C, while the third bath containing the rinse water, remains at 30° C. This is the only place in the plant where steam is used for process purposes.

All machinery within the plant are made of stainless steel, and must be cleaned with a chlorine-and-water solution each night to disinfect them for the next day's use. Cleaned bottles are then chilled with water cooled by an ethylene glycol chiller kept at 4° C, before being filled with carbonated water. This chiller accounts for a large portion of total electric power consumption at the plant.

Water quality is vitally important in making any soft drink, and Almaty has an advantage in having clear mountain water readily available. Even so, this water must be treated with an ion exchanger to ensure quality, and an analysis of incoming water is conducted in the laboratory every hour. In addition, samples are sent each month to the Pepsi authority in Austria for overall quality control, and a team from Austria visits this plant quarterly to monitor the quality of the entire production process.

Efficiency Measures Undertaken to Date

At the time of audit, there was no program in place to improve the energy efficiency of the bottling process, since the first priority for plant management has been to establish record keeping and cost accounting procedures to track expenses by components. To properly implement the cost accounting system, however, the plant must meter and monitor energy consumption (i.e., steam, hot water, and electricity), a major component of total production costs. Until this system is established, management staff will be unable to determine whether the price negotiated with the government will yield reasonable profits.

Management staff realize that the price of product inputs will continue to increase, and that they must be ready to raise sale prices accordingly. For example, the thermal energy cost to industrial users in 1991 was 11 rubles per Gcal, increased to 182 rubles per Gcal in early 1992, and is expected to rise again in the near future.

3. Residential Customer: Almaty Municipal Authority

Almaatagorteplokommunenergo (AGTKE or Almaty Municipal Authority) was selected as the representative residential system due to its significant role in distributing thermal energy to residential, as well as commercial, customers. Controlled by the executive committee of the City of Alma-Ata, it employs approximately 1,500 people. The organizational chart of AGTKE is depicted in **Figure 11**.

Figure 11.

Alma-Ata Municipal Authority Organizational Chart

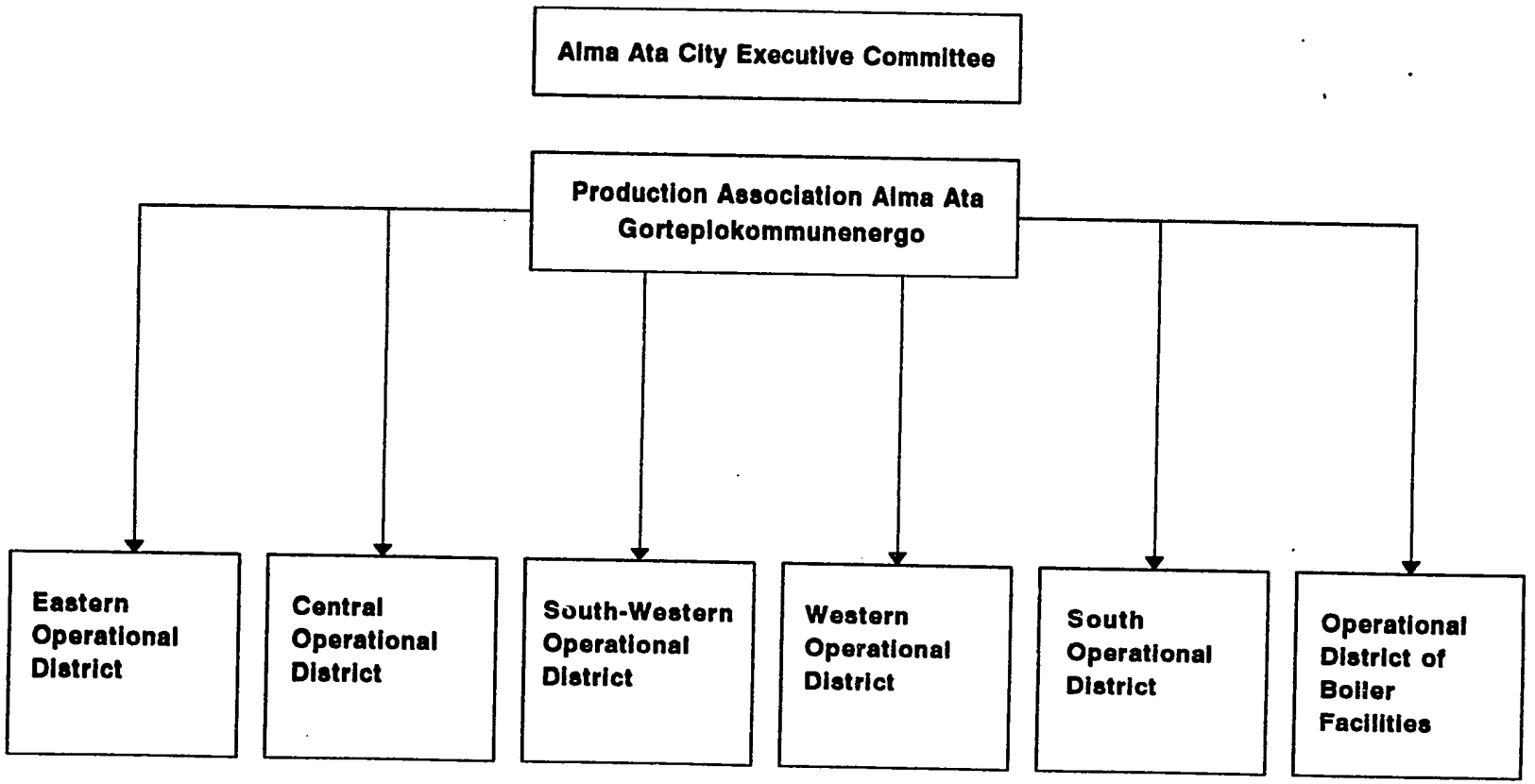

NOTE: Each operational district has 5 production sections.

AGTKE is the largest wholesale customer of AHSE energy, purchasing approximately 70% of the hot water distributed to service 600,000 to 700,000 residents. This system is divided into two regions: one served by hot water purchased from AHSE – part of AHSE's circulation loop - - and the other provided by AGTKE's own hot-water generation stations. The circulation rate within this loop is 5,400 m^3 per hour, and to function properly, it requires a make-up water flow of 1,000 m^3 per hour. This creates a demand for thermal energy from their boilers of approximately 1.4 to 1.6 million Gcal of the 5.5 million Gcal they receive annually from AHSE.

All AGTKE boilers were manufactured in Russia, with their performance guaranteed by the factory. The capacities of these boilers range from 1 MW to 40 MW, and are fueled either by natural gas (97% of those used), coal (2%), or Mazut (1%). There are also three major boiler stations with a thermal capacity of 160 MW each. The overall efficiency of these boilers (total heat input versus total heat output) was plotted against boiler loads, and falls in the 90% range. Combustion efficiency of the boiler stations was also reported to be approximately 90%. This level of efficiency is tested at least once every three years, with testing done after any major repair work.

Pumps utilized by the system are constant-speed models. Three booster pump stations are used to overcome the differences in elevation, which vary from 0 to 300 meters within the system. More than 800 km of pipelines connect pumps of different sizes, often running parallel to each other to provide combination levels of supply, and attempting to match seasonal variations in the hot water load required. All underground pipes within this system are placed within concrete culverts. The oldest pipelines in the system date back 30 years, but a new AHSE maintenance program calls for the replacement of approximately 25 km of pipelines each year to rehabilitate this network.

Many of the peaking tanks and boiler housings are insulated with asbestos cement coated with a protective sealer to prevent the dispersement of asbestos fibers. While this method is sufficient to meet current government regulations, insulation utilized on the hot water tanks is constructed of rock wool, and is secured by a thin layer of sheet metal attached to the tank wall by tie bars which are welded on the wall itself. Management is quite concerned about the use of this method as piles of loose rock wool are often present throughout the station yard.

Leakages

Hot water leaks present one of the biggest problems in the day-to-day operations of AGTKE. Although there is a central dispatch center to control and regulate the supply and demand of hot water, there are no flow meters at the customer site. In addition, AGTKE staff only have access to simplistic devices to monitor pressure changes along the pipeline; thus, leaks are often undiscovered until they have become serious. Instruments that can detect water leaks early will not only be cost effective, but will also increase the reliability of the system.

Controls

There are no automatic controls on the distribution loop. The receiving stations only monitor temperature and flow rate, and these records are not transmitted or accumulated anywhere; billings to customers are based on estimates calculated by the engineers. A water-ejector system is also housed at the receiving station which circulates hot water within the building; a flow diagram of a typical substation with such an ejector system is presented in **Figure 12.** Although some 400 of these ejector systems are already installed, an additional 900 are needed.

Energy Efficiency Measures

Plant management is anxious to improve overall energy efficiency on the supply side, and are working to keep all boilers within the system in top condition. On the consumption side, however, they are also a large part of the current inefficient and wasteful system. Energy costs have previously been heavily subsidized by the government so there is little incentive for end users to consider conservation, especially when customers are not metered and billed based on individual use. As a result, there have been few measures attempted by management to conserve thermal energy on the consumption side.

3.2 General (Total System) Audit

Energy losses within the district heating system are primarily caused by:

- Water leaks. Since both AHSE and AGTKE are open-loop heating systems, it is difficult to separate those water losses due to leaks from those due to domestic consumption. According to AHSE officials, water losses within the system due to leaks are estimated to be approximately 500 m^3 per hour under normal conditions, almost 10% of the total make-up water of 7,500 m^3 per hour.

  Considering the age of the pipelines, and the fact that booster pumps must work to overcome the differences in elevation - thus adding pressure within the pipe - actual losses may well be even higher.

  Water leaks are identified by either completing a visual inspection; measuring the ground surface temperature with infrared thermometer/thermalvision; monitoring pressure drops between sections; or analyzing the flow rate between sections.

- Failure to meter individual energy usage (industrial, commercial, and residential). Approximately 10% of the industrial customers in Kazakhstan have the orifice-type flow meters necessary to measure hot water/steam flow rates; all other customers are unable to measure individual heat consumption. Customers are generally charged a flat rate for heat, resulting in no incentive to conserve heat; many regulate the temperature of a room by opening a window, even in the middle of winter. One research institute in Poland, where such behavior is common, estimated that as much as 25% of the thermal energy delivered by the district heating system there was lost in this manner.

Figure 12

Flow Diagram
Heating Sub-Station Scheme
Multi-Unit Residential Building

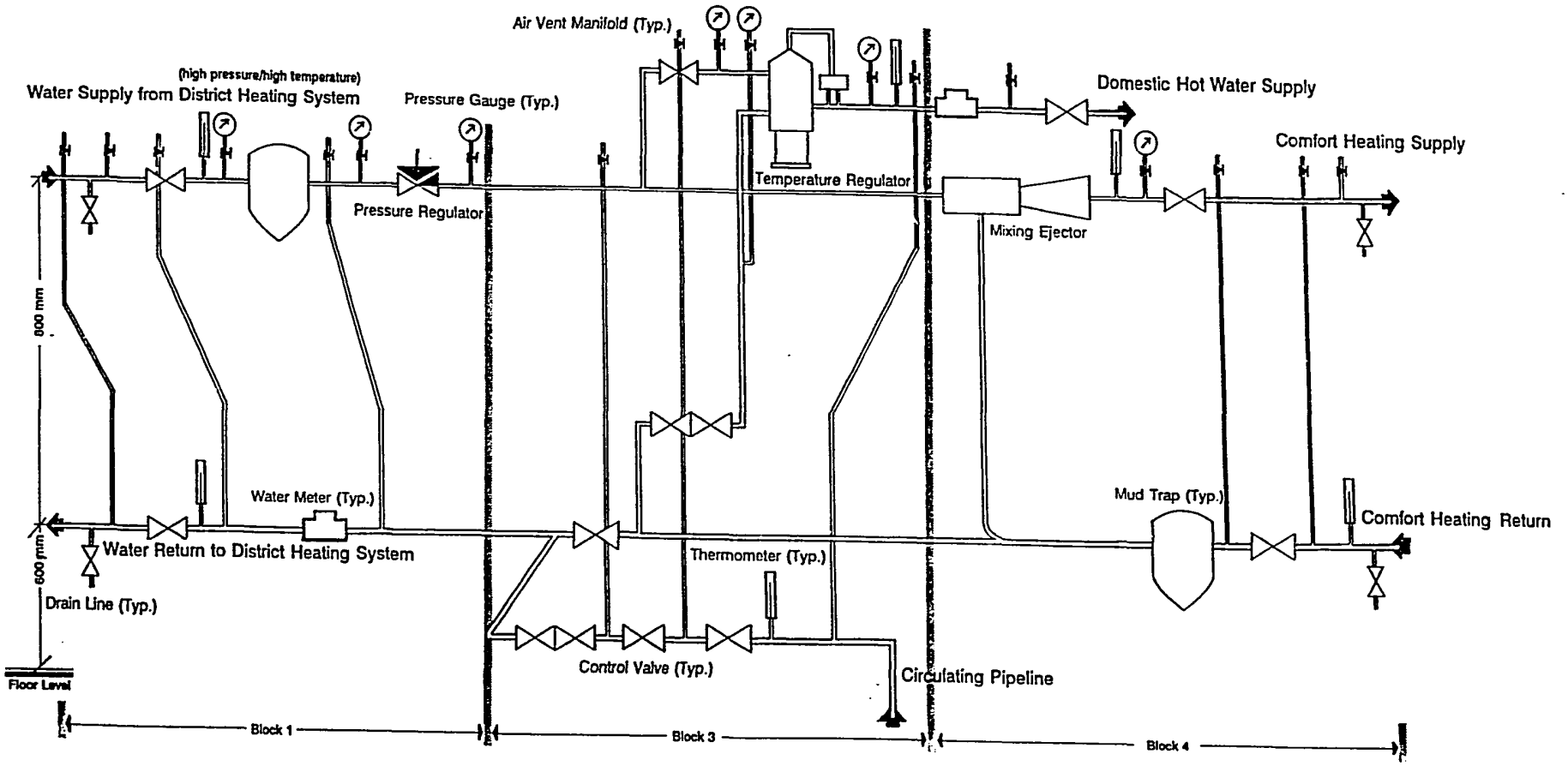

BEST AVAILABLE COPY

- Inadequate insulation. Damaged or inadequate insulation around exposed pipelines can be easily detected by using an infrared thermometer.

- Throttling of constant-speed pumps. Constant-speed pumps are commonly used in the Almaty district heating system. Often, two or three different-sized pumps are installed in parallel on the same line to service different load conditions. Through the use of these different size combinations, variations in load can be approximately matched with pump-station output. In locations between the combined pumps, however, flow rates are controlled by throttling the water through the pumps, resulting in large energy losses.

- Excessive changes in pressure. Obstructions in the distribution system can cause excessive changes in pressure and waste energy. These obstructions can be accidental, gradual, or the result of faulty design (such as inadequate valves, undersized pipelines, or too many fittings or bypasses).

Previous Page Blank

4. FINDINGS AND RECOMMENDATIONS

4.1 General

This section presents the overall findings and recommendations of the IRG Energy Audit Team members.

4.1.1 Mixing Station

The heart of the Almaty District Heating System is a mixing station comprised of 18 large water mains, each 1,000 mm in diameter. This mixing station receives fresh, heated make-up water and recirculates this from the loop; it also adds make-up thermal energy through its own boilers to provide the district's total hot-water supply. There are, however, no automatic instruments to monitor and balance the heat flow of this water. This lack of automated equipment represents a serious drawback for the distribution system and presents a major risk for the reliability of the system as a whole.

4.1.2 Boilers

Few boilers are equipped with oxygen analyzers to monitor excess air flow; this is an area in which combustion efficiency can be greatly improved. The use of these oxygen analyzers is especially critical when boilers are capable of using more than one type of fuel as in the case of the AHSE complex, where boilers can be fired by either natural gas or mazut.

4.1.3 Insulation

Insulation around the pipelines was found to be in poor condition in many sections, and in several instances, missing altogether. One major problem is the capability to securely attach insulation onto these pipelines.

4.1.4 Instruments and Measurements

A minimal number of instruments and automatic controls are available in the district heating system. Those that are available are quite old, either needing repair or re-calibration. Without instruments which function properly to monitor and record such essential variables as flow rate, temperature, and pressure, it is difficult to accurately determine balance measurements and conduct effective energy-efficiency analyses, on which overall plant performance should be based.

4.1.5 Cost Accounting and Performance Criteria

Although management staff are knowledgeable about the use of capital-cost analyses - as indicated by the previous emphasis on new construction - the lack of modern instruments to accurately measure and monitor heat flows at different levels of the system makes it difficult to complete such a detailed analysis. There is also a serious lack of plant performance criteria based on operating costs (and savings); management should institute such a directive.

4.1.6 Long-Term Energy Outlook and Policy

One factor which may make focusing on energy conservation and efficiency issues difficult is that government pricing subsidies are complicating the transition from a centralized to a market-based economy. The current energy situation in Kazakhstan bears strong similarity to that of Eastern and Central European countries in the sense that energy resources have been dependent on other republics [within the NIS].

A second factor complicating this shift is the question of a common currency among the NIS republics (i.e., Rubles). Whether the NIS remains an economic commonwealth sharing the same currency is uncertain at this time; the fundamental desire of each republic, however, is not to be economically dominated by Moscow. Based on this scenario, it is simply a matter of time before the formation of individual currencies within each republic.

Coal represents 50% of Kazakhstan's total energy consumption. The coal has a low Btu capacity, high ash content, and must be transported more than 1,000 km to major population centers. One long-range solution is to develop coal refining/processing facilities close to production sites.

When the resources of the Tengiz and other fields in northwestern Kazakhstan are developed, the country will become a net exporter of oil and natural gas. Until then, however, the country must rely on imports of these fuels, and will be subject to world-market level prices. Electricity and heating energy consumed has been subsidized not only by the Kazakh government but by those republics which have supplied Kazakhstan with inexpensive energy resources for many years.

4.1.7 Underlying Social and Economic Problems

Most industries are currently running in deficit and, subsequently, district heating systems are operating at a loss. As a result, the government is subsidizing industry. Industrial operations want to increase their energy efficiency to cope with existing and/or future price increases. However, improving energy efficiency entails modernizing facilities and implementing new production processes, since current facilities and production methods are already outmoded by Western standards.

Heavy capital investment will be needed to upgrade industries to be competitive in energy efficiency and productivity. Until industry achieves this level of efficiency, it will be difficult to pay for energy at prices approaching world market levels. On the other hand, without the existence

of world market-level energy costs, industry will not attract the necessary capital investment.

4.2 System Slice Audit

This section discussess the overall findings and recommendation of the heat production and distribution segments of the system slice audit.

4.2.1 Concept of Free Market System

There is a strong need to have the middle management of both AHSE and AGTKE learn the simple fundamentals of a free-market system; they are entirely unfamiliar with cost accounting procedures and practices. Many are unaware of the true cost of energy resources, and what the market price of thermal energy should be. It is also unclear if management fully understands the far-reaching effects of world price levels.

Their current, fundamental concerns focus on a mixture of price increases and job losses. They need to understand that temporary suffering and hardship are unavoidable during this transition. Recent examples (such as those of the Eastern and Central European countries) should be brought to their attention, and a workshop focusing on simple, practical issues of market economy is badly needed.

4.2.2 Revolutions in Energy Billing

Energy billings to customers are primarily based on estimated averages over the entire population. Even in cases where meters are installed, charges to customers are still based on estimated use. Government subsidies and ownership promoted customer insensitivity to such billing practices; to make customers liable for the amount of energy they consume, the billing system will need to be overhauled. This includes the widespread installation of heat meters, and the subsequent hiring and training of meter readers. Without a rational billing system in place, it will be difficult to implement energy conservation measures.

4.3 Equipment - Low Cost

Both the heat production and distribution segments of the IRG energy audit are covered by the following equipment recommendations. A list of low- and medium-cost equipment to be procured was also provided by specialists from both AHSE and AGTKE and appear in the sections below.

4.3.1 AHSE Equipment Recommendations

For the New Western Boiler Plant:

- A microprocessor. This processor will measure and monitor signals of flow and heat rates of different thermal production boilers, hot water distribution lines and transportation pumps, and automatically control and manage the supply to and demand from the mixing station.

- Mechanic suspension or chemical dispersing agent. This will improve the combustion efficiency of mazut.

- A refining system. This system will reduce the sulphur content of mazut.

- A gas analyzer. This will monitor pollutants in the exhaust gas. The German made Testo-33, 452, or its equivalent, is recommended.

- A system to control the oxygen content of the hot water.

- A non-contact type of water flowmeter. This flowmeter should be capable of monitoring water flow ranging from 5,000 to 50,000 m^3 per hour.

- A flue gas oxygen analyzer. This analyzer will regulate the amount of excess air for optimal combustion efficiency of the five hot water boilers at the New Western boiler house. Using one boiler at the New Western boiler house as an example, 154 MT of fuel oil can be saved in one year, equivalent to 1,004 barrels. Assuming a fuel oil cost of US $20 per barrel, the annual savings per boiler would be US $20,080, and together, five boilers could save more than US $100,000 a year. Since the cost of analyzers to monitor fiver boilers is approximately US $35,000, the payback period would be 4 to 5 months.

- A liquid level indicator. A 12-foot ultrasonic model to be used on the Mazut storage tanks.

- Flowmeters. Flowmeters are needed to monitor both (a) the natural gas line, and (b) the fuel oil supply line.

For industrial users:

- Heat meters. These meters will measure and control the quantity of heat used in space heating, ventilation, and utility consumption of an individual customer. Such signals can be transmitted to remote central stations. These meters should have a range of 500 to 3,000 m^3).

For residential users:

- Heat meters for the local mixing house. These meters will measure, record, and control the operations of the mixing house, and should range from 500 to 3,000 m^3.

- Residential heat meters. These will serve to measure, record and control the space heating and hot water utilization of one section of a residential building.

For overall telemetering and data acquisition:

Two projects aimed at the remote acquisition of data on telecomplex "Granit" have been implemented at AHSE. Due to insufficient computing power of the central computer (Electranika-60), the following functions could not be carried out:

* thermal energy generation audit;
* power consumption audit;
* local computing network;
* connection with supervisory level;
* information imaging (graphic presentation) at central terminal;
* automatic control of the boiler house regime;
* automatic control of the heating system regime, etc.

To realize these functions, the following automated data acquisition and control system is proposed for the district heating system. A primary data collection unit should be installed at the hot water boiler or pump station, and collected data initially transmitted to the district boiler house control board, then to the AHSE dispatching center, and subsequently to service departments and other users.

To implement this system, the following computer-facility configuration is proposed:

a. A local controller based on MP80186 with automatic central processor for 64 channels to collect telemeasurement readings; a binary signals adapter for 120 channels to capture telesignals; a telecontrol adapter for 128 channels; and a RS-232 juncture adapter to transmit data to the boiler dispatcher's PC.

b. A local network consisting of three PCs (IBM PC/AT-286) to perform the following functions at the Mixer station:

   - The first PC will acquire, store, accumulate, complete graphic imaging, and retransmit acquired data to/from local controllers;
   - The second PC will monitor the working regimes of boilers and other equipment based on information obtained from the first PC; and
   - The third PC will provide parallel operation as well as serve as a reserved backup of the first two PCs.

c. A local network developed from an IBM PC/AT-286 or 386 PC and two work stations (IBM PC/RT):

- The first station (IBM PC/AT-386) would store, accumulate, image and retransmit data acquired by computers in the local and district boiler houses;
- The second station implements the working regime of the boilerhouses, pump stations, and other equipment based on information obtained from the first station; and
- A PC of the local network is located within AHSE to automate their operation.

To accomplish this program fully, 4 local controllers, 1 IBM PC/AT 286 computer, 2 IBM PC/AT 386 computers, 2 IBM PC/RT work stations, 52 modems, and 20 local network adapters. There are also options to consider if this recommendation were implemented as follows:

Option No. 1. To accomplish one part of this program, 4 local controllers, 1 IBM PC/AT 286 PC, 1 IBM PC/RT work station, and 2 modems would be needed.

Option No. 2. To implement another part of this program, 3 local controllers, 6 IBM PC/AT 286 computers, 2 IBM PC/RT work stations, 3 modems, and 8 local network adaptors would be required. To put this program into effect, the necessary software should be provided in addition to the hardware indicated.

d. Parameter tracing system for the heat consumption regime.

4.3.2 AGTKE Equipment Recommendations

- Gas analyzers. These would be used to measure O_2, CO, CO_2, NO_x, and SO_2 in the exhaust gas.
- Hot water flowmeters. These flowmeters should have the capability to withstand pressures of up to 1.6 Mpa, 150° C, and should range from 10 to 300 m^3 per hour.
- Hot water heat meters. These should be able to withstand pressure of 1.6 Mpa, temperatures up to 150 °C, and water flows from 0 to 10 Gcal/hour.
- Contact resistance thermometers. Five (5) sets are needed, each with a measuring range between -50° and 200° C.
- Infrared thermometers. Two sets are needed, each with a measuring range between -50° and 500° C.

4.3.3 IRG Energy Audit Team Recommendations

The IRG Energy Audit Team developed the following list of recommendations for the purchase of low- or medium-cost energy efficiency equipment. This list is presented in order of priority.

- Infrared and/or contact thermometers. Such simple, inexpensive devices are useful to detect defective pipeline insulation, as well as to locate severe heat/hot water leakages in underground pipelines. Since it is difficult to detect small leaks in a large pipeline network, Team members recommend the use of hand-held infrared (IR) thermometers to measure the surface temperature of the ground where pipelines are buried. These thermometers are priced between $500 and $1,000 each.

- Pipeline insulation fastener system. Because of defective fasteners, many above and underground sections of pipeline have either missing or ineffective insulation.

- Pitot tube type hot water flow meters. These devices are easy to use and their accuracy good. Such instruments would permit readings of water flow rate, accounting for half of the information provided by heat meters. With this device, flow rates could be measured at sufficient points within the distribution system. Consequently, significant leaks in the system could be located within a brief amount of time.

  When readings are taken in sufficiently small time intervals, the total amount of hot water passage can be estimated with reasonable accuracy, providing a basic quantitative analysis for hot water consumption within a range of boundaries. If a temperature differential between the feed and return line can be estimated with some degree of accuracy, then the heat consumption rate can be computed.

- Heat flow meters and temperature indicators. These are medium-priced items which, when used in conjunction with Pitot flowmeters would provide information on heat consumption rates between any supply and return hot water line. The IRG Energy Audit Team strongly recommends heat meters be installed for individual customers or groups of customers (such as those in apartment complexes), so individuals may be charged for actual consumption. Suitable meters for hot-water systems are available in the US for $800 to $1,800 each, based on the size of the heat load to be measured.

  The Team also suggests a joint venture be set up in Kazakhstan to manufacture these heat meters for local markets.

- Stationary or portable gas analyzers. Hand-held oxygen and stationary CO analyzers manufactured by Bacharach are highly recommended as an inexpensive way to determine the combustion efficiency of boilers. In addition, portable gas analyzers (Enerac 2000, or Bacharach 300) are medium priced instruments which monitor oxygen, CO, CO_2, SO_2, and NO_x. They not only calculate combustion efficiency, but also monitor other air pollutants, and perform well in dust-free environments.

- A basic monitoring and control system for the AHSE mixing station. On the advice of experts from Honeywell, a basic heat flow monitoring and recording system is proposed which is capable of monitoring incoming heat streams (make up), outgoing heat streams

(total heat in-flow to the loop), and return streams from the loop. A total of 18 monitoring stations would be installed to allow measurement of hot water flow rates, temperatures, and heat flow rates of all major streams. This system would be the foundation upon which other control systems could be built.

- A demonstration heat input regulated system for a residential customer in AGTKE district. With experts from Honeywell, a basic heat flow monitoring, recording and regulating system is proposed. This system would cover 40 to 68 individual apartments in one building, where each apartment's radiator would be thermostatically controlled.

- An automatic system for the pump stations. IRG recommends an automatic system installed with funding from USAID. In the AHSE and AGTKE distribution systems, where more than 100 pumps are installed providing a total electricity load of 90 MW, a 10% savings can be achieved through the use of variable speed pumps; this savings translates into a reduced consumption of roughly 45 million kwh per year. At a cost of $0.06/kwh (the average U.S. price in 1991), savings could reach almost US $3 million annually.

4.4 Replication Potential

This section discusses the replication potential of these recommendations at the system and national levels.

4.4.1 System Level

Heat Production

- Combustion gas analyzers can be recommended for all four district boiler houses in the AHSE system and three district boiler houses in the AGTKE system. Portable analyzers can be utilized extensively in small boilerhouses throughout the city.

- The basic monitoring and control system for the Mixing station will eventually be part of the microcomputer control system which includes the automatic regulation of individual boilers. Such systems can be extended to cover all district boiler houses.

- A refining system to reduce the sulphur content of the mazut is too complicated and expensive to implement in this project. Even though a decision must be made whether to treat the fuel or to treat the flue gas, either option is too expensive to undertake at this time.

- Although an oxygen scavenger is commonly used in industry, locating one which could function in an open system (i.e. treated water suitable for drinking) is hard to find since most industrial units are manufactured for closed systems. The amount of water to be treated (7,500 m^3 per hour) is also an indication that such a system would be very costly to set up and expensive to operate.

Distribution Systems

- Pressure, temperature, flow, and heat meters suggested earlier are badly needed throughout the distribution systems, as well as for individual customers, (commercial, industrial, and residential) to ready them for new billing procedures. AHSE and AGTKE staff need them to trace water leaks, measure pressure balance, monitor heat balance, and to evaluate the performance of each section of their network.

- Contact and infrared thermometers are useful to trace heat leaks within pipeline insulation and hot water leaks of above and below ground pipelines anywhere in the networks. They are also useful to detect the potential bearing failure of water pumps in the booster pump stations.

- Pitot tube flow meters and pressure gauges at strategic locations are necessary to monitor general performance of the local sections, as well as in tracing the source of water hammer effect, and helping to eliminate such problems.

- Pipeline insulation fastener systems should be useful to all networks.

End User/Customer Systems

- Heat meters with varying degrees of sophistication would be useful to all customers within the networks.

- Monitoring and control systems designed for apartment buildings can be applied to commercial and industrial customers as well.

4.4.2 At the National Level

Heat production

Such instruments and control systems would be applicable to other municipal district heating systems within the Republic.

Distribution systems

All recommendations made for AHSE and AGTKE are applicable to other open distribution systems within the Republic.

End-user/customer systems

All recommendations made for customers of AHSE and AGTKE are applicable to other district heating systems within the Republic.

Appendix I

IRG Energy Questionnaire

INTERNATIONAL RESOURCES GROUP

DISTRICT HEATING QUESTIONNAIRE

A. IDENTIFICATION

1. PLANT'S NAME _____ PHONE NUMBER

2. ADDRESS _____ _____

3. NAME OF CONTACT, AND POSITION

_____

PHONE NO _____ FAX NO _____ TELEX _____

4. CUSTOMERS AND TERRITORY IT SERVES:

INDUSTRIAL: No OF CUSTOMERS _____; SIZE _____ Kg OF STEAM/HR
AVG _____; MAX _____; MIN _____; _____ M OF H2O/HR
COMMERCIAL: No OF CUSTOMERS _____; SIZE _____ Kg STEAM/HR
AVG _____; MAX _____; MIN _____; _____ M H2O/HR
RESIDENTIAL: No OF CUSTOMER _____; SIZE _____ Kg STEAM/HR
AVG _____; MAX _____; MIN _____; _____ M H2O/HR

B. MODE OF OPERATION

5. DATE OF PLANT COMMISSIONING

6. NUMBER OF EMPLOYEES; TOTAL; PER SHIFT

7. HOW MANY HOURS/DAY DOES THE PLANT OPERATE (AVERAGE)

HOW MANY DAYS PER YEAR

8. WHEN IS THE PLANT SHUT DOWN FOR MAINTENANCE, AND FOR HOW LONG

9. IS THE PLANT OPERATION YEAR AROUND ?
IF NO, WHEN IT IS ON AND WHEN IT IS OFF;

C. HEAT EXCHANGE STATIONS

10. ATTACH A DIAGRAM SHOWING THE TERRITORY THE HEATING PLANT IS SERVING

11. HOW MANY STEAM TO HOT WATER EXCHANGER STATIONS ARE THERE IN THE SYSTEM ?

12. WHAT IS THE TOTAL LENGTH OF STEAM LINE ? ARE THERE PRIMARY AND SECONDARY STEAM LINES IN THE SYSTEM ?

13. WHAT IS THE TOTAL LENGTH OF THE HOT WATER LINES IN THE SYSTEM ?

14. LIST OF ALL LINE SIZES AND THEIR RESPECTIVE LENGTHS.

PIPE DIAMETER	LENGTH IN KM
_____	_____
_____	_____

15. HOW MANY KCAL, BTU, OR GJ OF HEAT PER HOUR DELIVERED BY THE SYSTEM ?

MAXIMUM	MINIMUM	AVERAGE
_____	_____	_____
_____	_____	_____

16. WHAT IS THE WATER CIRCULATION RATE OF THE SYSTEM ?

MAXIMUM	MINIMUM	AVERAGE
_____	_____	_____
_____	_____	_____
_____	_____	_____

17. HOW MANY HOT WATER PUMPS USED IN THE SYSTEM ? WHAT ARE THEIR SIZES ?

HORSE POWER FOR THE MOTORS _____
FLOW RATE FOR THE PUMPS _____

18. ARE THE PUMPS EQUIPPED WITH CONSTANT SPEED OR VARIABLE SPEED MOTORS ?

19. ARE THERE SPARE PUMPS AVAILABLE FOR ROTATIONAL MAINTENANCE ?

20. ELECTRIC POWERED PUMP OR DIESEL POWERED PUMP ? IS THERE EMERGENCY POWER AVAILABLE IN CASE OF A BLACKOUT ?

21. WHAT ARE THE HOT WATER PIPELINE MADE OF ? STEEL, COPPER, IRON ETC.

22. HOW OLD ARE THE HOT WATER LINES ? OLDEST ____ YRS. NEW ONE ____ YRS

23. WHAT IS THE PRESSURE OF THE HOT WATER LINE ON THE DELIVERING END ?

24. WHAT IS THE PRESSURE AT THE RETURN END ?

25. WHAT IS THE TEMPERATURE OF THE HOT WATER AT THE DELIVERING END ?
WINTER _____ SUMMER _____

26. WHAT IS THE TEMPERATURE OF THE HOT WATER AT THE RETURN END ?
WINTER _____ SUMMER _____

27. ARE THERE BOOSTER PUMPS ALONG THE ROUTE TO MAKE UP FOR THE PRESSURE LOSS ?

28. WHAT IS THE WATER LOSS OF THE ENTIRE SYSTEM ? WINTER _____
SUMMER _____

63

D. ENERGY SUPPLIES AND DEMANDS

29. LIST ALL ENERGY PRODUCTS USED IN THE PLANT, E.G.
NATURAL GAS, LOW Btu GAS, COAL, LIGNITE, COKE, CHARCOAL, WOOD, FUEL OIL, DIESEL OIL, BAGASSE, AGRICULTURAL WASTE, ELECTRICITY, STEAM, HOT WATER, ETC

30. HOW ARE THEY BROUGHT TO THE PLANT ?
PIPE LINE, TRUCK, TANK CAR, RAIL CAR, BARGE, HIGH VOLTAGE LINE, ETC

31. IS THERE EXTRA MARGIN OF SUPPLY OF SUCH FUELS IF THE PLANT CHOOSES TO GO COGENERATION ?
IF YES, HOW MUCH ?
IF GAS, HOW MUCH, AND UNDER WHAT PRESSURE ?

32. LIST THE RELEVANT SPECIFICATIONS FOR EACH FUEL/ENERGY PRODUCT

HEATING VALUE (HV & LV)	KCAL/KG (SOLID OR LIQUID) KCAL/CU. M (GAS)

STEAM PRESSURE, TEMPERATURE, AND RATE (KG/HR)
GAS PRESSURE, FLOW RATE
ELECTRICITY VOLTAGE, AND LINE (TRANSFORMER) CAPACITY
HOT WATER PRESSURE, TEMPERATURE, AND RATE (KG/HR)

33. IN CASE OF STEAM OR HOT WATER, WHAT IS THEIR SOURCE, BOILER, TURBINE ?

34. WHAT IS THE CURRENT PRICE OF EACH ?

RB	/CU. METER OF GAS
RB	/METRIC TON OF COAL, COKE, LIGNITE, ETC
RB	/METRIC TON OF FUEL OIL
RB	/kWh OF ELECTRICITY FRM THE GRID
RB	/METRIC TON OF STEAM, OR HOT WATER

35. WHAT IS THE TARIFF OF ELECTRICITY CONSUMED AT THE PLANT ?

DEMAND CHARGE

CONTRACT DEMAND CHARGE	RB	/kW
MAX DEMAND CHARGE	RB	/kW
OVER CONTRACT PENALTY	RB	/kW

DEMAND CONSTRAINTS

36. DO THEY EXPERIENCE POWER INTERRUPTIONS OR SHORTAGE ?

ROTATIONAL BLACK OUT
BROWN OUT

14

37. FOR THE MOST RECENT 12 MONTHS, PLEASE FILL OUT THE TABLE BELOW:

		----- HOT WATER ---			NATURAL GAS		FUEL OIL	
		Gener	Demand	Cost prod	Usage	Cost	Usage	Cost
Month	Year	(GJ) x1,000	(GJ)	(RB) x1,000	(MCM)	(RB) x1,000	(MT)	(RB) x1,000
Jan	____	_____	_____	_____	_____	_____	_____	_____
Feb	____	_____	_____	_____	_____	_____	_____	_____
Mar	____	_____	_____	_____	_____	_____	_____	_____
Apr	____	_____	_____	_____	_____	_____	_____	_____
May	____	_____	_____	_____	_____	_____	_____	_____
Jun	____	_____	_____	_____	_____	_____	_____	_____
Jul	____	_____	_____	_____	_____	_____	_____	_____
Aug	____	_____	_____	_____	_____	_____	_____	_____
Sep	____	_____	_____	_____	_____	_____	_____	_____
Oct	____	_____	_____	_____	_____	_____	_____	_____
Nov	____	_____	_____	_____	_____	_____	_____	_____
Dec	____	_____	_____	_____	_____	_____	_____	_____
Total		_____		_____	_____	_____	_____	_____

38. ARE THERE DATA AVAILABLE ON DAILY AND SEASONAL VARIATIONS IN HOT WATER LOAD ?

39. IS THERE A DAILY HOT WATER HEATING LOAD CURVE AVAILABLE ?

40. IS COGENERATION AVAILABLE AT THE SITE ?

IF YES, HOW MUCH ELECTRICITY IS GENERATED BY THE PLANT LAST YEAR ?

FUEL USED FOR COGENERATION, QUANTITY, AND HEAT CONTENT (H)

IS THE STEAM CONSUMED WITHIN THE PLANT AND HOW MUCH ?

E. <u>BOILER INFORMATION</u>

41. PROVIDE DATA FOR EACH BOILER

MAKER

TYPE/MODEL

CAPACITY

DATE INSTALLED

HOW MANY TIMES OF MAJOR WORKS DONE, AND ON WHAT BOILERS ?

STEAM PRESSURE

TEMPERATURE

65

FUEL CONSUMPTION

FUEL USED

WHAT ARE THE ALTERNATIVE FUELS ?

SOURCE OF FEED WATER

WATER TREATMENT USED

WATER QUALITY AFTER TREATMENT

MAKE UP WATER

PERCENTAGE OF CONDENSATE RETURN

PEAK DEMAND FOR STEAM

F. TURBINE INFORMATION

42. PROVIDE DATA FOR EACH TURBINE

MAKER

TYPE/MODEL

CONDENSING
BACK PRESSURE
EXTRACTION

RATING CAPACITY

DATE INSTALLED

STEAM PESSURE
INLET
OUTLET

STEAM TEMPERATURE
INLET
OUTLET

BY PASS

VALVES

MAJOR REPAIR WORKS DONE

66

G. MEASUREMENT AND METERING

43. HOW IS HOT WATER SUB-METERED FOR RESIDENTIAL END USERS ?

    HOW IS HOT WATER SUB-METERED FOR COMMERCIAL END USERS ?

    HOW IS STEAM/HOT WATER SUB-METERED FOR INDUSTRIAL END USERS ?

44. WHAT IS THE PERCENTAGE OF TOTAL ELECTRICITY USED IN OFIICES ?

G. COGENERATION FACILITY

45. WHAT ARE THE REQUIREMENTS FOR CONNECTION TO THE GRIDS ?

46. WHAT IS THE ELECTRIC RATE IF DISTRICT HEATING PLANT INTENDS TO SELL ITS COGENERATION POWER TO THE GRID ?

    RB. /kW DEMAND
    RB. /kWh USAGE

47. WHAT IS THE BACK-UP POWER COST CHARGED BY THE GRIDS ?

    RB. /kW DEMAND

48. HAS THE PLANT EVER BEEN CONSIDERING TO DO COGENERATION THEMSELVES ?

    IF YES, WHAT HAPPENS NEXT ?

    IF YES, WHY THERE IS NO COGENERATION ON SITE ?

    IF NOT, WHY NOT ?

49. IS THE ELECTRIC UTILITY CO. WILLING TO BE A PARTNER OF THIS COGENERATION VENTURE ?

    IF NOT, WHY NOT ?

    IF YES, WHAT % THEY WOULD LIKE TO PARTICIPATE ?

50. DOES THE HOST SITE (PLANT) WANT TO BE A PARTNER IN THIS JOINT VENTURE?

    IF NOT, WHY NOT ?

    IF YES, WHAT % THEY WOULD LIKE TO PARTICIPATE ?

61

51. ARE THERE OTHER PARTIES WHO WOULD LIKE TO CONSIDER TO BE A JOINT VENTURE PARTNER ?

52. IS THE DISTRICT HEATING PLANT ALSO IN CHARGE OF DISTRIBUTING THE HOT WATER TO CUSTOMERS ?

53. ARE THERE TWO SEPARATE AUTHORITIES: ONE TAKES CARE OF THE BOILER SIDE, AND THE OTHER TAKES CARE OF DISTRIBUTING THE HEAT ?

54. WHAT IS MANAGEMENT'S PREDICTION THE GROWTH OF HEATI[illegible]AND IN THE NEXT TEN YEARS ?

55. ARE THERE ANY ENERGY MANAGEMENT OR ENERGY CONSERVATION PROGRAMS IMPLEMENTED IN THE LAST THREE YEARS ? IF YES, WHAT ARE THEY ?

56. OTHER COMMENTS OR INFORMATION THAT ARE PERTINENT TO THE ENERGY AUDIT OF THIS DISTRICT HEATING PLANT ?

57. WHAT ARE THE CRITICAL AREAS WHERE LOW COST INSTRUMENTS CAN MAKE A SIGNIFICANT CONTRIBUTION TOWARD EFFICIENCY IMPROVEMENT OF THE SYSTEM.

58. PLEASE ATTACH AN ORGANIZATION CHART SHOWING THE MAJOR FUNCTIONS:

* ADMINISTRATION
* OPERATIONS
* MAINTENANCE
* ENGINEERING
* ACCOUNTING
* CUSTOMER SERVICE
* ETC

59. PLEASE INDICATE THE TOTAL NUMBER OF PERSONS AND THE NUMBER OF SUPERVISORS IN EACH FUNCTIONS.

60. ARE ANY MAINTENANCE AND/OR REPAIR FUNCTIONS CONTRACTED TO OUTSIDE COMPANIES ? PLEASE DESCRIBE THE ARRANGEMENT.

61. HOW MANY POWER STATIONS SUPPLY THERMAL ENERGY TO THE DISTRICT HEATING SYSTEM ? PLEASE DESCRIBE EACH ONE BRIEFLY.

62. HOW IS THE PRICE FOR THERMAL ENERGY ESTABLISHED ? HOW OFTEN CAN IT BE ADJUSTED ? WHO HAS THE AUTHORITY TO APPROVE A PRICE ADJUSTMENT ?

68

63. PLEASE DESCRIBE THE TYPES OF CUSTOMERS WHO RECEIVE SERVICE FROM THE DISTRICT HEATING SYSTEM ?

* PRIVATE RESIDENTIAL * _____
* COLLECTIVE RESIDENTIAL * _____
* LIGHT INDUSTRY * _____
* HEAVY INDUSTRY * _____
* GOVERNMENTAL AGENCIES * _____
* COMMERCIAL * _____
* OTHER * _____

64. WHAT ARE THE RATES FOR EACH GROUP OF THE ABOVE CUSTOMERS ?

65. HOW ARE THE RATES DERIVED ? ARE THERE COST ACCOUNTINGS PRACTICED ? IF YES, PLEASE DESCRIBE BRIEFLY.

66. ARE EACH CUSTOMER'S USAGE METERED, AND CHARGED ACCORDING TO HOW MUCH THEY EACH CONSUME ?

67. ARE ANY CUSTOMERS TO WHOM STEAM OR HOT WATER IS DIRECTLY SUPPLIED BY THE POWER PLANTS, WITHOUT INVOLVEMENT FROM THE DISTRICT HEATING SYSTEM ? IF SO, WHAT ARE THE QUANTITIES SUPPLIED, AND WHAT ARE THE PRICE CHARGED ?

68. WHO IS RESPONSIBLE FOR OPERATION AND MAINTENANCE OF THE PRIMARY PUMPS FEEDING THE SYSTEM ?

69. WHO AND WHAT DEPARTMENT IS RESPONSIBLE FOR DEVELOPING AND DIRECTING ENERGY MANAGEMENT AND CONSERVATION PROGRAMS ?

70. WHAT HAS BEEN THE RESULT OF THESE PROGRAMS DURING THE PAST YEAR ?

71. WHAT ARE THE MOST IMPORTANT CAUSES OF HEAT LOSS IN THE SYSTEM ?

* WATER LEAKAGE
* STEAM LEAKAGE
* LACK OF SUB-METERING
* PIPING LAYOUT AND SIZES
* POOR INSULATION
* PUMP INEFFICIENCY
* LACK OF TEMPERATURE REGULATOR FOR INDIVIDUAL CUSTOMERS
* OTHERS (PLEASE SPECIFY)

72. PLEASE ESTIMATE THE AMOUNT OF EACH OF THE ABOVE LOSSES AS A PERCENT (%) OF TOTAL THERMAL ENERGY DELIVERED TO THE SYSTEM.

73. WHAT CREATES SUCH HEAT LOSSES ?

* LACK OF MAINTENANCE
* LACK OF PERSONNEL
* LACK OF ACCURATE INSTRUMENTS
* LACK OF SPARE PARTS
* LACK OF INCENTIVE
* POOR DESIGN
* PIPE NETWORK TOO OLD
* PUMPING EQUIPMENT TOO OLD
* OTHER (PLEASE SPECIFY)

74. WHO MANAGES THE WATER TREATMENT AND WATER QUALITY FOR THE SYSTEM ?

75. PLEASE DESCRIBE THE COSTS OF OPERATING THE DISTRICT HEATING SYSTEM. PLEASE PROVIDE COSTS AS RUBLES PER KCAL FOR A TYPICAL MONTH DURING THE HIGH DEMAND SEASON AND DURING THE LOW DEMAND SEASON:

	HIGH DEMAND RB/KCAL	LOW DEMAND RB/KCAL
* WATER DEMAND CM/HR		
* FUEL COST		
* WATER COST		
* MAINTENANCE COST		
* LABOR		
* MATERIAL		
* OPERATING COST		
* ELECTRICITY COST		
* DEPRECIATION		
* TAXES AND INSURANCES		
* ADMINISTRATIVE OVERHEAD		
* SUPPLIES		
* OTHERS (PLEASE SPECIFY)		

76. WHAT ENERGY-SAVING PROJECTS HAVE BEEN IDENTIFIED THAT MAY REQUIRE CAPITAL EXPENDITURES:

A. PROJECTS THAT WOULD REQUIRE LESS THAN U.S. $10,000. EACH.

B. PROJECTS THAT WOULD REQUIRE MORE THAN U.S. 10,000. EACH.

77. PLEASE ESTIMATE THE ANNUAL BENEFITS THAT WOULD BE ACHIEVED BY EACH ABOVE PROJECTS.

78. ARE COMPUTERS USED IN THE SYSTEM ?

* FOR PROCESS CONTROL
* FOR DATA COLLECTION
* FOR PROCESS MONITORING
* FOR BILLING AND BOOK KEEPING
* FOR OFFICE AND COST ACCOUNTING

79. PLEASE DESCRIBE BRIEFLY THE TYPE OF COMPUTER EQUIPMENT USED AND THE FUNCTIONS PERFORMED.

80. DO WORKERS, AND MANAGERS RECEIVE TRAINING IN ENERGY SAVING AND COST SAVING ? IF YES, WHAT ARE THE TRAINING PROGRAMS, AND WHO DOES THE TRAINING ?

81. DO WORKERS AND MANAGERS RECEIVE BONUSES OR OTHER FINANCIAL RECOGNITION FOR ENERGY SAVING AND COST SAVING IDEAS ? IF SO, HOW MUCH AND HOW OFTEN ?

82. WHAT IS THE WATER PRESSURE

* AT THE OUTLET OF THE PUMPS FEEDING THE SYSTEM ?
* AT THE FURTHEST POINT IN THE SYSTEM ?
* AT THE POINT OF RETURN TO INLET OF PUMPS ?

83. IS WATER TEMPERATURE AND PRESSURE MEASURED AT INTERMEDIATE POINTS IN THE SYSTEM ?

84. IS WATER FLOW RATE MONITORED AT INTERMEDIATE POINTS IN THE SYSTEM ?

85. HOW ARE MAJOR LEAKS DETECTED ?

86. WHAT IS THE HOT WATER LOSS FOR THE ENTIRE DISTRICT HEATING SYSTEM,

* HIGH DEMAND SEASON
* LOW DEMAND SEASON

87. WHAT IS THE FURTHEST POINT FROM THE MAIN PUMPING STATION IN KM ?

88. WHAT IS THE ESTIMATED RESIDENCE TIME FOR WATER IN THE SYSTEM,

* AT PEAK LOAD
* AT OFF PEAK LOAD

(04/06/92 FSW)

11