PN-ABQ 668
86100

Technical and Economic Evaluation of the Fier Nitrogen Fertilizer Factory in Albania

Funded by

United States Agency for International Development (USAID)

Grant No. 180-0046-G-00-2491-00

Prepared by

International Fertilizer Development Center
P.O. Box 2040
Muscle Shoals, Alabama, U.S.A.

IFDC Contract No. 01112/93

Final Report – This Report Supersedes an Earlier Draft Dated May 1993

July 1993

Acknowledgment and Thanks

The management of IFDC is grateful for the efforts and assistance of a large number of Albanians and others without whose support our team could not have completed this study.

We are particularly appreciative of the valuable contributions provided by the staffs of the various departments at the Fier Nitrogen Fertilizer Factory dealing with production, maintenance, technical, accounting, laboratories, and marketing.

Similarly, we are very thankful for the excellent assistance given by the Minister and other officials of the Ministry of Industry, Mineral Resources and Energy, and staff and personnel from the Albanian National Petroleum Enterprise (ALBPETROL), Chevron Overseas (Albania) Limited, the in-country office of USAID, and the in-country office of IFDC.

Finally, we are indebted to the United States Agency for International Development (USAID) for providing the financial assistance that made the study possible.

International Fertilizer Development Center
July 1993

Amit H. Roy
President and Chief Executive Officer

Technical and Economic Evaluation of the Fier Nitrogen Fertilizer Factory in Albania

Executive Summary

Introduction

An evaluation was undertaken by the International Fertilizer Development Center (IFDC) under the terms of a Grant from the United States Agency for International Development (USAID). The evaluation examined the status of the nitrogen fertilizer factory located in Fier, Albania. This fertilizer factory has a design capacity sufficient to supply all of Albania's nitrogen fertilizer needs for several years to come while still providing nitrogen fertilizer for export to regional markets should such export opportunities arise. The major constraint, however, to the Fier factory in routinely reaching its design capacity is the lack of a reliable supply of natural gas – the critical raw material and fuel required for the nitrogen fertilizer manufacturing process. This issue is discussed in detail later.

The IFDC evaluation team consisted of J. R. Polo, Chemical Engineer and Team Leader; J. R. Lazo de la Vega, Ammonia/Urea Specialist; and J. W. Foster, Ammonia/Urea Specialist and Natural Gas Specialist. The team spent 3 weeks in Albania during the period February 14-March 6, 1993.

The stepwise investment and technical assistance program for the Fier nitrogen factory outlined in this Executive Summary, and more fully described in the accompanying evaluation report, will ensure that the issues of natural gas supply, domestic demand for nitrogen fertilizer, environmental stewardship, and cost effectiveness of nitrogen fertilizer at the factory level are fully addressed.

A Plan of Action

The Fier factory is capable of producing two types of nitrogen fertilizer: urea and ammonium nitrate. However, production of only urea is recommended because the

ammonium nitrate plant (referred to as Train 1) is quite old and in a poor state of repair. Also, for technical reasons the physical quality of the ammonium nitrate product is substandard, and it tends to become hard and stonelike shortly after it is produced making it difficult for the farmer to effectively use. Thus, the focus of the following plan of action is to optimize the manufacture of urea in the production units referred to as Train 2 and Train 3.

In summary, it is recommended that the following sequence of actions be implemented to restore the Fier factory to operation in the most rapid and cost-effective way. The rationale for this plan of action is described in detail in the ensuing sections dealing with (1) nitrogen supply and demand, (2) production economics, (3) cost of restoring Fier factory to commercial operation, and (4) natural gas supply.

Action 1 – Immediately provide emergency funding for the Fier factory in the amount of about US $2.0 million to (1) start the plant rehabilitation process, (2) address the natural gas supply issue by reconfirming the previously performed Delvina gas well analysis, (3) provide technical training for key factory personnel, (4) begin to implement the more urgent critical repair projects, and (5) purchase the critical spare parts and laboratory equipment necessary to permit production of urea in Train 2 and/or Train 3. This level of funding, as shown in **Table 1**, includes US $550,000 for a resident consultant and support services for engineering management for a period of 2 years.

Action 2 – Provide within 3 months of implementation of Action 1 additional funding in the amount of about US $3.2 million to complete the emergency plant rehabilitation as indicated in **Table 1**. This additional funding will be used to (1) rework at least one of the Delvina natural gas wells, (2) repair/replace the damaged portion of the natural gas transmission pipeline to the Fier factory, (3) purchase catalysts and other critical supplies, and (4) continue essential major repair projects.

Action 3 – Once the above two actions are implemented and once the rework of the Delvina natural gas well(s) proves successful, the Fier factory should be receiving upwards of 200,000 m^3/day of natural gas (at least during the warm months) and producing about 300 mt of urea/day or about 70,000 mt of urea/year (assuming 8 months of operation). Considering a domestic requirement of about 40,000-50,000 mt/year urea, this amount of natural gas supplied during 8 of the warmest months of the year would still make it possible

2

to export up to about 30,000 mt of urea to regional markets if competitive export opportunities should exist.

The benefits of the above action plan include the following:

1. Domestic production of nitrogen fertilizer by the Fier factory can easily meet domestic demand and thereby eliminate the drain on scarce foreign exchange which is urgently needed to support other sectors of the economy, for example, the energy sector. At the projected demand of 46,000 mt urea in 1994 and an import (border) price of about US $130/mt, the annual foreign exchange savings would be nearly US $6.0 million.

2. With a more favorable price for natural gas (5,500 leks/1,000 m^3) and a steady flow of natural gas to the Fier factory, it may be easier for ALBPETROL (the Albanian state-owned gas and oil-producing entity) to obtain financing to rework other natural gas wells and further improve the natural gas supply situation over the long term. It is likely that a price increase for natural gas above 5,500 leks/1,000 m^3 will be necessary with time, but the improved Fier factory economics together with expanded market opportunities for urea should be able to accommodate a reasonable increase in the price of natural gas above 5,500 leks/1,000 m^3.

3. The Fier factory would become a reliable supplier of urea to the emerging number of private-sector agri-inputs dealers. Such a reliable domestic supply capacity would help to greatly stabilize the availability and price of nitrogen fertilizer in Albania. Also, an enhanced urea supply and marketing system would help to improve the economics of the Fier factory, strengthen the economic status of the private-sector agri-inputs dealers and their farmer customers, and enhance ALBPETROL's position as a reliable and cost-effective supplier of natural gas.

4. Improved economics of production will help the Fier factory obtain the financing needed to implement the necessary environmental and energy saving projects and perhaps expand the product warehouse capacity and realize other improvements in product quality and services. Of course, such financing, in the order of about US $10 million, would be undertaken only if the economics of the overall operation permit.

Nitrogen Supply and Demand in Albania

The Fier factory consists of the following nitrogen fertilizer production units having the indicated design capacity.

Train 1	Ammonium nitrate	340 mt/day
Train 2	Urea	265 mt/day
Train 3	Urea	320 mt/day

The supply of nitrogen fertilizer from domestic production and imports under the centrally planned system was fairly steady over the past decade. However, due to recent changes in the political, social, and economic structure of the country, the supply of nitrogen fertilizer has declined dramatically during the past 3 years. The main technical reasons for the decline in the supply of domestically produced nitrogen fertilizer are (1) the lack of natural gas – the critical raw material and fuel required for the manufacturing process and (2) a lack of critical repair parts for the plant equipment.

Nitrogen fertilizer sales in Albania during the April 1992/March 1993 crop year amounted to about 37,000 mt of product (including 20,000 mt of imported urea, a small amount of ammonium nitrate, and about 4,000 mt from a 10,000-mt lot of diammonium phosphate (DAP) that was also imported) or the equivalent of 15,000 mt of nitrogen. The urea and DAP were imported under the terms of a USAID-funded Commodity Assistance Grant. For purposes of comparison, only 3 years ago (1989/90) about 80,000 mt of nitrogen was reportedly consumed annually, of which the majority was supplied by the Fier factory. Sales of about 46,000 mt of urea can be expected during the crop year April 1993/March 1994. If natural gas, the critical input, is available, this amount of urea could be supplied by operating only one of the urea units at about 60% of design capacity.

Production Economics of Fier Nitrogen Fertilizer Factory

From the analysis of the data obtained at the Fier factory, it is concluded that the current cash cost of producing nitrogen fertilizer in the form of urea at design capacity is about US \$75/mt when natural gas, the critical fuel and feedstock required for the process, is priced at 5,500 leks/1,000 m^3 (equivalent to about US \$1.42/1,000 ft^3). A cash cost of US \$75/mt urea is well within the range of international factory-gate production costs. The

relatively low cost of production is possible because the initial capital investment at the Fier factory is regarded as a sunk cost as the factory has only a limited salvage value if it is not operated; therefore, capital charges are not included in the production cost. Furthermore, as the fixed cost of production is quite low, as shown in **Figure 1**, the unit cost of production does not increase too rapidly with a decline of capacity utilization; this is advantageous considering the natural gas constraint. A natural gas price of 5,500 leks/1,000 m^3 was used for estimating the production cost because discussions with ALBPETROL indicated that a price increase from the current level of 3,300 leks/1,000 m^3 to this higher level was imminent. The evaluation indicated, however, that even if the natural gas price in Albania increases to match current international prices of about 8,000 leks/1,000 m^3 (equivalent to about US \$2.0/1,000 ft^3), the cash cost of producing urea would still be only about US \$90/mt; this level of cost would still leave a reasonable margin for profit considering an estimated factory-gate selling price of urea in Albania of about US \$130/mt, which is currently around the level at which urea could be imported from the international market.

Cost of Restoring the Fier Factory to Commercial Operation

Complete Restoration Including Energy and Environmental Upgrading

From a technical point of view, the Fier nitrogen fertilizer factory can be brought back to sustained and economic operation provided sufficient natural gas is available and no investment costs (capital charges) are considered. Therefore, it is recommended that funds be provided to restore the two ammonia/urea plants, referred to as Trains 2 and 3, to full operating status. If natural gas is available for the operation of both trains, any urea produced in excess of the requirements of the Albanian domestic market could be made available for regional export. Rehabilitation of the ammonia/ammonium nitrate plant, referred to as Train 1, is not recommended due to its age and deteriorated condition as previously mentioned. Also, if sufficient urea is available, there is no overriding need for the ammonium nitrate fertilizer product. Train 1, however, may be important to the Government of Albania as it could be used to produce nitric acid and ammonium nitrate which may be needed for nonfertilizer industrial purposes. This alternative, however, was not considered in this evaluation.

The investments that would be required to fully restore all three trains, including the ammonium nitrate train, to full operation are shown in **Table 2**. Also included in **Table 2**

are expenditures required to improve the natural gas supply to the Fier factory. As already emphasized, a reliable supply of natural gas is critical to the success of the proposed rehabilitation program.

Emergency Restoration

Of the approximate total of US $19 million shown in **Table 2**, the expenditure of about US $3.6 million assigned to Train 1 can be deleted, and the approximate US $10.3 million indicated for the bagged product warehouse, environmental and safety projects, and energy-saving retrofits for Trains 2 and 3 only, including treatment facilities for contaminated process water, can be deferred until the plant is restored to operation on an emergency basis and technical and economic parameters required for these expenditures are more fully evaluated. The minimum level of investment (about US $5.2 million) as previously shown in **Table 1**, however, is urgently needed to restore the factory to operation on an emergency basis.

This emergency investment program, totaling about US $5.2 million (**Table 1**) includes expenditures to help ensure the short-term availability of natural gas that will permit operation of either Train 2 or Train 3. It is important to keep Train 2 in a standby condition to minimize the risk of a major failure of Train 3 which is essentially new and has not been fully tested over a long period of time.

The emergency investment program of about US $5.2 million, focused on Trains 2 and 3, should be complemented, after a more detailed evaluation as indicated above, by an additional investment of about US $4.5 million for energy-saving retrofits (modifications) and an additional US $4.3 million for the implementation of environmental and safety projects (excluding Train 1), thus bringing the total investment to about US $14.0 million. The energy-saving retrofits should be given a high priority as the current excessive consumption of natural gas per metric ton urea unnecessarily drains Albania's scarce natural gas supply.

Natural Gas Supply – The Most Critical Issue

As already mentioned, the most critical issue which has to be resolved before the Fier factory can be restored to a technically and economically viable operation is a reliable supply of natural gas. The investments shown in **Table 1** include emergency funding to facilitate the increased supply of natural gas. Due to a natural gas shortage in the country, the Fier factory was supplied with a maximum of only 140,000 m^3/day during the warm months of the calendar year 1992. This amount of natural gas permits a production of about 200 mt of urea/day; this is equivalent to about 60% of the capacity of Train 3, the most modern urea production unit in the Fier factory complex. It is expected that for 1993 the Fier factory will receive the same amount of natural gas during the warm months of the year. However, during the winter months, there is an insufficient supply of natural gas to the Fier factory to permit operation because the limited supply of natural gas is used for residential and other essential nonfertilizer purposes. As of the end of April 1993, a sufficient amount of natural gas was not available to allow the Fier factory to operate even at its lowest possible production rate.

The main reasons given for the decline in natural gas supply in Albania include (1) a normal decline in the exploited reserves of natural gas from the relatively shallow wells, (2) natural gas production constraints due to lack of spare parts and equipment to provide proper maintenance, (3) lack of funds to perform exploration and to drill new wells, and (4) the need for updated exploration and production technology, especially as it pertains to offshore production of oil and natural gas. According to an independent study, at least one of the natural gas wells in the Delvina gas field can be reworked to increase its production by at least 100,000 m^3/day. However, with time (perhaps 3-5 years), the production of natural gas from the reworked well(s) is expected to again decline. If this extra natural gas can be realized and dedicated to the Fier factory, along with the 140,000 m^3/day that the factory is normally scheduled to receive during the warm months of the year, at least one of the urea production trains could be temporarily restored to full operating capacity. Along with the reworking of the well(s), a portion (about 22 km) of the pipeline used to transport the natural gas to the Fier factory also needs to be repaired/replaced. The cost of the pipeline repair project, about US $1.75 million, is included in the emergency investment program described in **Table 1**.

The Issue of Privatization

While the issue of privatization of the Fier nitrogen factory was not included in the scope of this technical and economic evaluation, the move toward privatization in certain components of the agricultural sector is clearly within the scope of the USAID Grant that made this evaluation possible. Therefore, the issue of privatization is briefly addressed in this Executive Summary.

The rehabilitation of the Fier nitrogen factory and the restoration of a reliable long-term supply of natural gas could quite easily extend the productive life of the Fier factory 10 years or more in spite of the advanced age of some of the production units. Continued operation of the factory should be based on a factory-gate pricing of urea equivalent to the border price, which is currently estimated at about US $130/mt. If the full production of the Fier factory is not consumed in the domestic market at this price, then a market clearing (lower) price should be used to determine if the factory should be operated; the market clearing price, of course, must be above the cash cost of operation.

Figure 1 illustrates the costs of production and margins at two factory-gate selling prices for urea: US $130/mt, the estimated border price equivalent, and US $90/mt, an estimated market clearing price. In both cases production costs are based on an annual production of about 90,000 mt urea assuming that the natural gas is priced at 5,500 leks/1,000 m^3. Working capital in the amount of about US $4 million at an annual interest rate of 12% is used in both cases.

At the assumed market clearing price of US $90/mt urea, the cash operating cost (sunk cost basis) is US $84.5/mt, leaving a margin of US $5.5/mt. At the border price equivalent of US $130/mt urea, the margin is US $45.5/mt.

This illustration (example only) shows that pricing urea at the border price equivalent of US $130/mt would allow for profitable privatization. Assuming a discount rate of 20% (because of a high risk premium) and a 10-year operating life, the net present value of the cash flows indicates a present factory valuation of about US $17 million. Clearly, the factory-gate price for urea must be set at a minimum of about US $90.0/mt not including any allowance for capital charges.

As this illustration shows, there is scope for profitable privatization provided a reliable supply of natural gas can be assured and a factory-gate price for urea of about US $130/mt is competitive. The method that could be used to privatize the Fier factory is unclear at this time but could include a direct buyout or some sort of joint-venture scheme, involving both employees and consumers.

Conclusion

A reliable and cost-effective supply of nitrogen fertilizer is essential for achieving increased levels of production of wheat and maize, the primary food and feed grain crops in Albania. Furthermore, the success of privatization in the agri-inputs sector depends heavily upon a readily available and cost-effective supply of nitrogen fertilizer.

The Fier fertilizer factory is well positioned to supply not only Albania's current domestic demand for nitrogen fertilizer, but also to meet earlier domestic demand levels which amounted to about 175,000 mt urea in 1989/90 crop year – the current combined design capacity of the two Fier urea production units.

The most critical ingredient in the nitrogen fertilizer supply situation in Albania is the domestic supply of natural gas needed for the manufacture of the urea fertilizer. The proposed technical assistance and investment program described in this evaluation report is designed to concurrently address the issue of natural gas supply and at the same time position the Fier factory so that it can effectively convert the scarce domestic natural gas resource into nitrogen fertilizer in an environmentally sound and cost-effective way.

Table 1. Investment Urgently Required to Restore Urea Units (Trains 2 and 3) to Operation on an Emergency Basis

	Amount
	(US $ x 1,000)
Funds Required Immediately	
Engineering management and support services (2-year program)	550
Reconfirm Delvina gas well analysis[a]	80
Spare parts and critical repair projects	1,132
Laboratory equipment	80
Training programs (plant operations and quality control)	125
Subtotal	**1,967**
Funds Required Within 3 Months of Implementation of Project	
Acid fracture work on at least one Delvina gas well	750
Natural gas pipeline repair/replacement	1,750
Catalysts/other supplies	560
Other major (critical) repair projects	155
Subtotal	**3,215**
Total[b]	**5,182**

a. Analysis performed by Halliburton Manufacturing and Services Ltd.; study dated January 20, 1993.

b. This emergency funding should be quickly complemented by an additional US $8.8 million for energy, environmental, and safety upgrading as shown in Table 2.

Table 2. Investment Required to Fully Restore All Trains of the Fier Nitrogen Fertilizer Factory to Full Operation and to Improve the Supply of Natural Gas to the Fier Factory

	Portion of Fier Factory Complex Benefiting From Indicated Expenditure				
	Train 1 Ammonium Nitrate	Train 2 Urea	Train 3 Urea	Entire Factory Complex	Total
	(US $ x 1,000)				
Engineering management and support services				550	550
Reconfirm Delvina No. 4 and No. 12 gas well analysis[a]				80	80
Acid fracture work on at least one of the Delvina gas wells				750	750
Natural gas pipeline repair/replacement				1,750	1,750
Spare parts	878	159	247	716 [b]	2,000
Bagged product warehouse[c]				1,500	1,500
Laboratory equipment				80	80
Catalysts/other supplies	300	260	300		860
Major repair projects	685	120	45		850
Environmental and safety projects	1,700	1,260	1,250	1,800 [d]	6,010
Energy saving retrofits		2,250	2,250		4,500
Training programs				125	125
Total	**3,563**	**4,049**	**4,092**	**7,351**	**19,055**

a. Analysis performed by Halliburton Manufacturing and Services Ltd.; study dated January 20, 1993.
b. Parts and supplies for servicing entire factory complex; not specific to a given production train.
c. This expenditure may be optional if other storage facilities can be used.
d. Treatment facilities for contaminated process water.

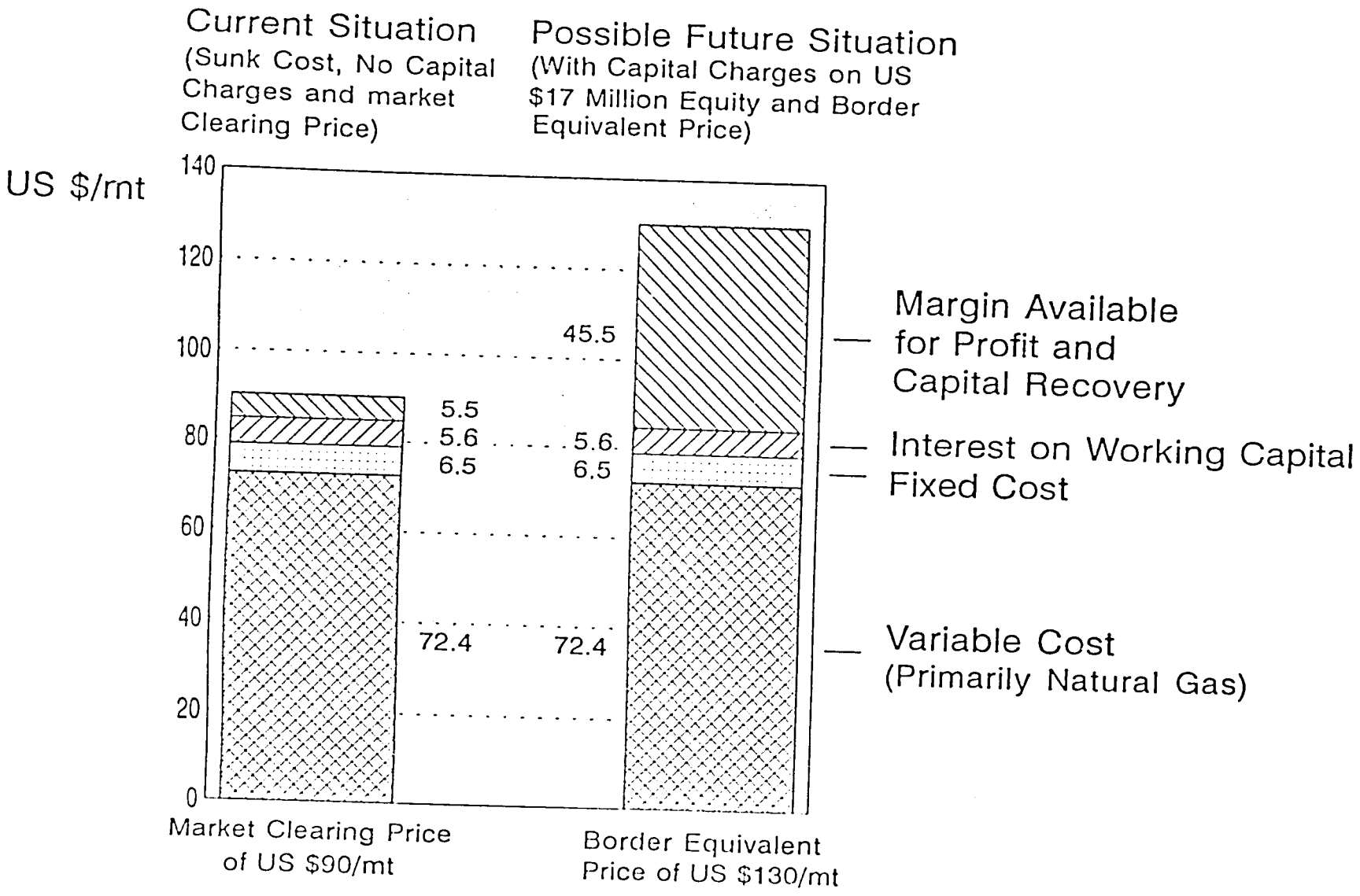

Figure 1. Make-up of Factory Gate Price of Urea under two Pricing Scenarios -- 90,000 mt/year urea

Table of Contents

		Page
1.	Introduction	1
2.	Description of Units	4
3.	Natural Gas Situation	8
4.	Economics of Operation	15
5.	Possibility of Importing Gasoline as Feedstock	19
6.	Process and Mechanical Problems Affecting Operation	22
7.	Spare Parts Limitations	25
8.	Environmental and Safety Problems	26
9.	Retrofits for Plant Modernization and Increased Efficiency	32
10.	Company Structure	33
11.	Recommended Future Use of Units and Actions to Be Taken	36
12.	Conclusions	44

Appendix A. Terms of Reference

Appendix B. Key People Met in Albania by the IFDC Team While Conducting the Study

Appendix C. Halliburton Report

Appendix D. Cost Calculations

Appendix E. Truck Modification

Appendix F. Proposal From Sulzer Burchhardt for Oxygen Compressor

Appendix G. Spare Parts

Appendix H. Environmental/Pollution Control

Appendix I. Chevron

Technical and Economic Evaluation of the Fier Nitrogen Fertilizer Factory in Albania

1. Introduction

Changes in the political and social structure of Albania have disrupted the traditional use of fertilizers in the country, affecting agriculture. This disruption has directly and severely affected the fertilizer production industry in the country. In order for this industry to survive it must undergo restructuring of its production facilities to become more efficient in the use of its resources. In the nitrogen fertilizer industry, this need is intensified by the scarcity of adequate feedstocks (raw materials) for the operation of the production units. Also, as a result of the political and social structure in Albania during the past decades, the technical and mechanical integrity of many of the production facilities in the country have been affected. This study recommends actions to bring the nitrogen fertilizer production facility back to a sustained and economically effective operation, with improved and more efficient use of its resources in a more sustainable and environmentally sound way.

This study was performed for the United States Agency for International Development (USAID) by the International Fertilizer Development Center (IFDC). In performing this study, IFDC outposted a team of three engineers for three weeks (February 14 through March 6, 1993) to Albania. The team spent the bulk of the time during those three weeks at the installations of Uzina Plehrave Azotike Fier (Fier Nitrogen Fertilizer Factory) referred to throughout this report as the Fier Plant. The Fier Plant is the only factory which produces nitrogen fertilizers in Albania. During the visit of the team, the production facilities at the Fier Plant were totally shut down due to unavailability of feedstock for the production of ammonia. The unavailability of feedstock was due to a considerable reduction in the country's production of natural gas, and the established policy to divert a portion of the natural gas produced to be used for heating within various cities during the cold winter months.

The members of the team were:

Jorge R. Polo – Chemical Engineer, Team Leader
Jose R. Lazo de la Vega – Ammonia/Urea Specialist
James W. Foster – Ammonia/Urea Specialist, Natural Gas Specialist

This present report is the total output from this study. Apart from the Executive Summary and this introductory section which gives a generalized description of the study and the report, the report contains the following sections:

Description of Units – This section describes the physical plant as it presently stands, and highlights the capacities and interconnections available at present.

Natural Gas Situation – This section describes the natural gas situation in the country and of the possible availability of this feedstock for the production of fertilizers in the near future, and analyzes steps to ensure its increased availability.

Economics of Operation – This section calculates the production costs incurred by the Fier Plant. It compares the costs of producing the different products at full capacity and at the limited capacity imposed by the feedstock availability and by the present mechanical limitations. Operating costs for world class production facilities are also given for comparison.

Possibility of Importing Gasoline as Feedstock – Although operation of part of the facilities with gasoline is extremely expensive and should not be considered as a continuous mode of operation, this section offers an analysis of how to import gasoline in case it is done as a stop-gap measure to meet a momentary fertilizer production shortage.

Process and Mechanical Problems Affecting Operation – This section describes the mechanical, process and other problems the Fier Plant presently experiences, which translate into production limitations and higher production costs. This section also describes the actions which are necessary to solve or minimize these problems.

Spare Parts Limitations – This section gives the list of badly needed spare parts which are limiting production. The list separates the parts according to the various units and those that are general to the entire plant.

Environmental and Safety Problems – In this section a description is made of the environmental problems within the different units, the actions required to remedy such problems, and estimated costs for the solutions.

Retrofits for Plant Modernization and Increased Efficiency – This section describes the actions recommended to modernize the production units to improve capacity and efficiency.

Company Structure – This section talks about the structure of the company, addresses the personnel issues, and describes training programs recommended to prepare the plant personnel for a market economy environment.

Recommended Future Use of Units and Actions to Be Taken – This section rationalizes the production scheme that should be implemented by the Fier Plant to cope with the immediate feedstock limitation while meeting the nitrogen fertilizer needs of the country. The needs for nitrogen fertilizers are calculated based on the use of nitrogen fertilizers during 1992.

Conclusions – This section summarizes the conclusions reached in the study.

Appendix A shows the Terms of Reference prepared for the implementation of the present study, and **Appendix B** includes the list and addresses of personnel contacted while in Albania. Other Appendices, which include information received and calculations made, are introduced in the appropriate sections of the report.

In performing this study, extensive use was made of the report "Fertilizers in Albania – Situation, Analysis, and Recommendations," issued by IFDC as output from the initial inspection visit made by George W. Bolds and Donald R. Waggoner in January 1992. Most of the people contacted during the in-country visit, and from which much of the information used in this report was received, were staff members of the departments dealing with production, maintenance, accounting, laboratories, and marketing at the Fier Factory, although meetings were also held with the Minister and other officials of the Ministry of Industry, Mineral Resources and Energy, with the Executive Director and other officials of ALBPETROL (the Albanian National Petroleum Enterprise), with personnel from Chevron Overseas (Albania) Limited, with personnel from the in-country office of USAID, and with personnel from the in-country office of IFDC.

16

2. Description of Units

The Fier Nitrogen Fertilizer Plant is the only nitrogen fertilizer production site in Albania. It is located in the city of Fier about 110 km south of Tirana. The Fier Plant has three fertilizer production trains. Train 1 has an ammonia unit, a nitric acid unit, and an ammonium nitrate (AN) unit. Trains 2 and 3 each have an ammonia unit and a urea unit. Utilities are purchased from a separate power generating plant adjacent to the Fier Plant. The power generating plant supplies electric power, boiler feed water, steam and process water. Plant layout diagrams of the three trains are shown in **Figures 1, 2, and 3. Figure 4** shows the minimum and maximum amounts of natural gas to operate the units and the corresponding minimum and maximum plant production capacities.

Train 1 (Referred to Also as Unit 210)

Ammonia Plant – The ammonia plant of Train 1 was designed for the production of anhydrous ammonia with a nameplate capacity of 150 mt/day. It was designed and supplied in 1966 by Process Engineering Company Montecatini of Italy. With the exception of the air separation unit using the Linde process, all of the process technology is from Montecatini.

The gasification section was originally designed to use straight-run naphtha for feedstock. In 1971 the plant was modified to use natural gas as feedstock. In 1991 the plant was again modified to use gasoline as feedstock. This latter modification was performed because of shortage of natural gas.

Oxygen from the air separation plant (ASP) via two compressors and steam is introduced into the gasifier along with the feedstock which is compressed to operating pressure. The reaction proceeds at high temperature. The gasifier process does not require the use of a catalyst. The gases leaving the gasifier contain CO, CO_2, and H_2 with some carbon soot which is suspended in the gases. After the gasifier the gases enter a heat recovery system to generate steam and then into a wash section to remove the soot. The gases are cooled and enter a sulfur removal unit. From the sulfur removal unit the gases are saturated to increase their water content prior to entering into the shift converter where the CO reacts with steam to form CO_2 and H_2. From the shift converter the gases, after cooling and water separation steps, enter the CO_2 removal unit which uses an arsenic-promoted Gimmarco-Vetrocoke process. The arsenic (usually arsenic trioxide) works as an activator and differs from monoetanolamine (MEA), glycine, and other

straight chain promoters in the fact that the arsenic activating action is exercised through the whole phase of absorption and through the whole stripping operation. After the CO_2 removal unit the remaining traces of CO and CO_2 are removed by scrubbing with a copper solution. The copper liquor is a solution containing both cupric and cuprous ammoniacal salts of formic acid plus an excess of ammonia. The gas leaves the copper solution scrubbing unit practically free of CO and CO_2 which are poison materials for the synthesis catalyst. Nitrogen from the air separation unit is introduced and mixed with the gas in the proper amount for ammonia synthesis. The ammonia synthesis section is of the standard high pressure design. The liquid ammonia produced in the synthesis section is sent to a Horton-type spherical storage tank.

All compressors in this ammonia unit are of the reciprocating type and mostly manufactured by Nuovo Pignone of Italy. The oxygen compressors were manufactured by Sulzer of Switzerland.

Nitric Acid Plant–The nitric acid plant was designed by Montecatini for the production of nitric acid with a concentration of 53% with a nameplate capacity of 270 mt/day. The design of the plant is based on the catalytic oxidation of ammonia with oxygen in the presence of a platinum catalyst at a pressure of 3.5 kg/cm^2 and a temperature of 840°C.

Air is compressed to 3.5 kg/cm^2 by a centrifugal compressor with a steam turbine driver and a tail-gas expander for power recovery. After the compressor, the air flow is mixed thoroughly with ammonia to give a homogeneous blend. The mixture (1:10 ratio) enters the converter and in the presence of the catalyst it is oxidized to form nitrogen oxides. The catalyst consists of fine mesh gauzes (five) made of platinum and rhodium. The reaction is highly exothermic, thus increasing the temperature of the product gases. In order to make use of the energy released by the reaction, a boiler to generate steam is installed at the exit of the converter. The boiler has a capacity to produce about 15,000-16,000 kg/h of steam at a pressure of 18 kg/cm^2. This steam is used in the turbine of the turbo compressor that feeds the process air into the converter. After the boiler the product gas at a temperature of 250°-260°C enters into heat exchangers for further cooling to a temperature of 40°C. Besides cooling in the heat exchangers the gas undergoes a partial oxidation from NO to NO_2 and HNO_3 (at a 25% concentration). The acid formed here is sent to absorption columns separately from the gas. The gas leaving the heat exchangers (mainly NO) enters the oxidation area of the absorption columns where the NO is

-18

converted to NO_2. The columns are fitted with sieve trays. Here oxidation occurs in the free space between the trays and absorption takes place on the trays. Cooling is performed by tube coils on the trays with a flow of cooling water. Make-up water for absorption is added at the top of the absorption column, product acid withdrawn at the bottom, and gas passed countercurrently. The product acid with a concentration of 53% is stored in tanks. The residual gas with a concentration of about 0.2%-0.15% of NO_x is reheated and exhausted to the atmosphere after passing through the power recovery expander on the process air compressor.

Ammonium Nitrate Plant–The ammonium nitrate (AN) unit was designed by Montecatini with a nameplate capacity of 340 mt/day of prilled AN. The AN unit consists of a neutralization section where ammonia and the nitric acid react and concentration and prilling sections.

Nitric acid (53% HNO_3) and anhydrous ammonia react in a neutralizer to produce AN solution with a concentration of about 73%. This solution is then concentrated to about 99.7% using a two-stage vacuum concentrator and pumped to the top of a prilling tower. At the top of the tower the practically anhydrous AN melt is sprayed through four spray heads. The AN droplets solidify while falling down through the prilling tower and are collected at the bottom of the tower. The prill tower is rectangular in shape and is based on a natural draft design. The prills are then cooled in a fluid-bed cooler, coated with finely ground limestone (calcium carbonate), and sent to a bulk storage warehouse. The warehouse is circular in shape and has a capacity of 1,000 mt.

Train 2 (Referred to Also as Unit 211)

Ammonia Plant–The ammonia plant was designed in China by China National Machinery Import & Export Corporation, and most of the engineering, equipment, materials, and construction were supplied in 1976 by China. The plant has a nameplate capacity of 180 mt/day anhydrous ammonia. This plant is designed based on steam reforming of natural gas.

Before the natural gas enters the primary reformer in the ammonia plant, there is a facility to remove CO_2 and H_2S using monoethanolamine (MEA) solution. This unit is used when the plant is fed associated gas from oil wells. If the gas does not contain high amounts of CO_2 and H_2S, the MEA unit can be bypassed. Compressed natural gas is pretreated for sulfur removal using Cobalt Molybdate and Zinc oxide catalyst-charged vessels. The

sulfur-free gas is mixed with steam in a 4-to-1 ratio (steam to carbon) and then preheated to enter the primary reformer. The primary reformer is a side-fired radiant furnace containing 100 catalyst tubes. From the primary reformer the gas enters the secondary reformer. Preheated air is introduced in the secondary reformer to provide the needed nitrogen to produce ammonia. After the secondary reformer the hot gases are quenched with water and then enter into a heat recovery boiler to produce steam. From the boiler the gases enter the high-temperature-shift (HTS) converter to react the CO with steam to produce CO_2 and H_2. The remaining CO in the gas mix is further converted into CO_2 in a low-temperature-shift (LTS) converter. The gas mixture with about 0.3% CO leaves the LTS converter to enter the CO_2 removal unit. The CO_2 removal system is hot potassium carbonate promoted by vanadium pentoxide and aminoacetic acid. From the CO_2 removal unit the gas goes into a methanator to remove traces of CO_2 and CO by converting them into methane using a nickel catalyst. From the methanator the gas free of CO and CO_2 enters the ammonia converter in the synthesis loop. Liquid ammonia produced in the synthesis loop is stored in two spherical tanks with a capacity 304 mt each. All the compressors in the ammonia plant are of the reciprocating type and were fabricated in China.

Urea Plant – The urea plant was designed in China and has a nameplate capacity of 270 mt/day. The plant design is based on the total recycle process. It was commissioned in 1976 and since beginning operation, it has been possible to operate the plant at 300 mt/day.

Ammonia from the spherical storage tanks is transferred into an ammonia buffer tank in the urea plant. From here the ammonia is fed into the reactor by a set of three high pressure reciprocating pumps (two in operation and one on standby). Carbon dioxide from the ammonia CO_2 removal unit is compressed in a reciprocating compressor and sent to the urea plant to enter the urea reactor at the desired pressure and temperature. Together with the ammonia and CO_2, recycled carbamate solution is also fed to the reactor. This carbamate solution is fed to the reactor by three reciprocating pumps (two in operation and one on standby). These materials react inside the reactor to form urea. The CO_2 conversion efficiency in the reactor is approximately 62%, which is comparable to other urea processes. From the reactor the solution enters the medium pressure section and then the low pressure section. These two sections serve as carbamate decomposition with corresponding carbamate cooler/condenser steps and ammonia recovery. The plant was designed with an ammonia tail gas scrubber but at present the scrubber is not in operation

due to danger of explosion because there is no catalytic reactor step to remove the hydrogen from the tail gas. At present the tail gas is vented to the atmosphere. The carbamate solution recovered from the carbamate condensers is recycled to the reactor. Urea solution from the low pressure section enters the evaporation section. The evaporation section consists of two stages of vacuum concentration evaporators that concentrate the urea solution into a urea melt. The urea melt leaving the second evaporator is then pumped to the top of the prilling tower (one pump in operation and one on standby). The prilling device at the top of the prilling tower is a rotating cone-shaped bucket. The prilling tower is of the natural draft type constructed of concrete. The urea prills are collected at the bottom of the prilling tower and by means of a belt conveyer the prills are transferred to a bulk storage warehouse, circular in shape, and with a capacity of 2,500 mt/day.

Train 3 (Referred to Also as Unit 212)

Train 3 at the Fier Plant is very similar to Train 2 with the exception that Train 3 has a slightly larger production capacity. The ammonia plant in Train 3 has a nameplate capacity of 212 mt/day and the urea plant has a nameplate capacity of 320 mt/day. Train 3 was also designed in China by the same firm that designed Train 2 in 1976. Besides being larger in production capacity Train 3 incorporates improvements compared with Train 2. These improvements are based on deficiencies or problem areas that were detected in Train 2 through the years. Train 3 started up in 1991 but total operating time has been less than 6 months because of lack of natural gas.

3. Natural Gas Situation

The production of nitrogen fertilizers uses either natural gas or some other hydrocarbon fuel as an energy source and as a raw material. All three production trains installed in the Fier Plant have been designed to use natural gas, although Train 1 has also been provided with the possibility of utilizing gasoline. Elsewhere in this report, the costs of operating Train 1 with gasoline have been compared with those of operating it with natural gas. Based on these costs, it can be concluded that operation with gasoline is not feasible for normal operation and should only be considered as an emergency alternative. With this as background, it can be seen that the feasibility of bringing the Fier Plant back into normal operation is intimately tied to the availability of natural gas in Albania, as there is no provision for importing natural gas for this operation.

Natural gas is produced in Albania from two origins: (1) natural gas coming from wells drilled into natural gas deposits, referred to as "dry gas" and (2) gas associated with petroleumc Associated gas is less pure than dry gas, containing up to 12% of unwanted impurities such as CO_2, sulfur compounds, inert materials, and heavier hydrocarbons. The Fier Plant can use either type of gas, although the use of associated gas has two main drawbacks in the Fier Plant: firstly, before use as process gas, it has to be purified at the plant which not only reduces the volume by about 12%, but also consumes energy; and secondly, it creates production problems mainly in the burners of some equipment. Throughout this report, the term natural gas refers to either of the two gases, although when feed rates are given, it refers to either dry gas, or to associated gas after the purification step at the Fier Plant.

Information received by the IFDC team indicates that about 270,000 m^3/day of natural gas is produced in Albania. Approximately 170,000 m^3/day is produced as dry gas and 100,000 m^3/day is associated gas from oil production.

Natural gas production sources are:

1. Divjake	60,000 m^3/day
2. Ballaj	22,000 m^3/day
3. Frakulla	13,000 m^3/day
4. Povelca	62,000 m^3/day
5. Panaja	14,000 m^3/day

Associated gas production sources are:

6. Ballsh	26,000 m^3/day
7. Manez	27,000 m^3/day
8. Sheqisht	4,000 m^3/day
9. Kucova	6,000 m^3/day
10. Delvina	33,000 m^3/day
11. Patos	4,000 m^3/day

There are approximately 165 producing natural gas wells in Albania and associated gas is produced in approximately 110 oil wells. The depth of the natural gas wells is typically about 1,600-2,000 m with the deepest one being about 4,200 m.

22

According to information provided by ALBPETROL, natural gas production has dropped off rather drastically in the last few years as shown below and in **Figure 5**:

Year	Production (m^3/year)
1986	260,650,000
1987	235,350,000
1988	184,730,000
1989	227,250,000
1990	243,069,000
1991	141,427,000
1992	102,500,000

A review of the production decline might suggest problems with the gas wells other than a normal decline in the reserves of natural gas. Bottom-hole problems (problems in the bottom part of the well, where the gas enters into the man-made structure of the well) such as plugged casing perforations or high liquid loading in the casing could cause some of this decline.

A meeting was held with ALBPETROL staff at Patos to discuss the natural gas supply to the Fier Plant and to find out if help might be needed in trouble shooting the wells to determine if flow of natural gas could be increased. At first, it seemed that the problem with gas production was normal decline in natural gas reserves and not well problems. ALBPETROL has already installed compressors on many of the wells to increase flow, but major increases in natural gas production will require exploration for new reserves and drilling new wells. Albania has adequate reserves of natural gas to last for many years to come but deeper drilling will be needed to increase supplies.

In this regard, ALBPETROL has plans to drill two deep wells and the first is under way. ALBPETROL foresees drilling of new wells and increasing natural gas production by about 100,000,000 m^3/year. At the present time, however, there is not enough natural gas production to support the Fier Plant at full capacity. Albania is producing about 250,000 m^3/day and this is expected to increase by 100,000 m^3/day in 1993 or 36,000,000 m^3/year.

The amounts of natural gas needed to operate the Fier units at minimum and maximum capacities are shown in **Figure 4.** A summary of the amounts follows:

Unit	Natural Gas Minimum	Natural Gas Maximum
	('000 m^3/day)	
210 (Train 1)	67,200	128,400
211 (Train 2)	123,000	205,000
212 (Train 3)	147,000	222,600
Total	337,200	556,000

The worldwide look at reserves and production as published in *The Oil and Gas Journal* (OGJ Special, Dec. 28, 1992) shows estimated proven reserves for natural gas, in Albania, as of January 1993 at 700,000,000,000 ft^3 of natural gas. This is equivalent to about 20,000,000,000 m^3 of natural gas. Albania is presently using approximately 250,000 m^3/day for other purposes during the winter months, and if the Fier Plant was operating at full capacity utilizing 556,000 m^3/day this would give a consumption of approximately 800,000 m^3/day. It can be assumed that if natural gas supplies were available, other industries and heating usage would increase to result in a total estimated consumption for Albania of about 1,000,000 m^3/day or about 360,000,000 m^3/year. Reserves of 20,000,000,000 m^3 would provide gas supplies for about 55 years provided that all of the reserves can be economically exploited.

While complete details were not available, apparently the Government of Albania (GOA) has signed contracts with Chevron and Occidental Petroleum to drill offshore, with the first well scheduled to be drilled within 6 months. Additionally, in June of 1993, the GOA expects other proposals from approximately sixty oil and gas companies which they contacted during meetings in Houston and London.

It is clear that the GOA is aware of the importance of operating the fertilizer plant but the GOA has to consider several other industries also. ALBPETROL in 1993 will use its best efforts to supply the Fier Fertilizer Plant 140,000 m^3/day of natural gas for 7 months out of the year, from April 1 to October 31. ALBPETROL also stated that

natural gas is being sold to the fertilizer plant for 3,000 lek/1,000 m^3 or about US \$28/1,000 m^3 while their production costs are reported to be US \$55/1,000 m^3.

ALBPETROL has requested the Ministry of Industry, Natural Resources and Energy to increase the price of natural gas to US \$50 (5,500 leks)/1,000 m^3 and later to US \$73 (8,000 leks)/1,000 m^3.

As mentioned before, it seems that the major reason for the decline in natural gas production was decline of reserves of the shallow wells. Presently, there are about one hundred (100) flowing wells in Albania and very few new wells are being drilled. However, there is one well in the Delvina region in southern Albania – Delvina 12 – that is producing 30,000 m^3/day and the well head or working pressure has held constant over an extended period of time. The bottom-hole pressure is over 200 atm. It is estimated that by reworking this well, the production would be increased by 3.3 times and could be increased up to 10 times its present daily production. A similar possibility exists for the Delvina 4 well that is currently producing about 5,500 m^3/day. At the time of the study approximately US \$750,000 is required to accomplish the work on the two wells but funds are not available. The team was told that several field service companies had worked on this problem.

It seems that one of the reasons the Fier Plant was not getting gas was that the price of 3,000 lek/1,000 m^3 is too low. If the price were higher, more gas would be available. This was taken to mean that more money would be available for drilling which would increase the future gas supply.

The IFDC team later visited Chevron Overseas, Albania, in Durres. It seems that Albania has the resources but the infrastructure is for the most part not in good condition. Chevron has an agreement with the Albanian Ministry of Industry, Natural Resources and Energy and will be drilling offshore this summer near the city of Vlora. Chevron is interested in Enhanced Oil Recovery (EOR) in the Delvina area but has not been able yet to reach any agreement on this with the GOA. There are indications that the condition and operation of the gas wells has been a major factor in the decline in gas production while decline in reserves is also affecting gas production. Similar conditions exist in oil production.

On Thursday, March 5, 1993, the IFDC team met with the representatives of the Ministry of Industry, Mineral Resources and Energy, ALBPETROL, and the Technological Institute for Oil and Gas which is also part of ALBPETROL. During the meeting the Delvina natural gas wells were discussed. A copy of a report by Halliburton Oil Co. relative to their studies of the Delvina wells was made available to the IFDC team. Halliburton, a U.S. Corporation with worldwide offices, is well qualified in this field. Apparently Halliburton was one of the service companies referred to the IFDC team in previous discussions. In the meeting it was explained that the structure of Delvina 12, the largest well of the two, is an open well which operates from a sump in the producing zone rather than drawing the gas and liquids through perforations in a well casing. The report shows that the producing zone, which is limestone, is about 700 m in depth, about seven (7) km long, and about two to three (2-3) km wide. The bottom of the producing zone is about 3,866 m deep and the bottom of the well tubing is 3,700 m or about 160 m above the floor of the producing zone. The bottom-hole or producing zone pressure is about 439 atm or about 6,500 psig and has held fairly constant for the past 4-5 years. The working or well head pressure is about 30 atm.

The Delvina 12 well is producing approximately 30,000 m^3/day of gas and about 8 m^3/day of gas condensate which is processed at the Ballsh refinery. The Halliburton report recommended an "acid fracture" of the producing zone of the well to increase permeability, and predicted a gain in production of 3.3 times the present flow rate. The report also pointed out that in many cases the actual increase in production has exceeded the predicted increase. If the fracture recommended by Halliburton and others is successful, it would boost production from 30,000 m^3 to 100,000 m^3 or more per day from that single well. A tenfold increase, as mentioned by others, could boost production to as much as 300,000 m^3/day. It was estimated that US $300,000 would be needed to do this work and similar work on the Delvina 4 well but the total cost could be as much as US $750,000 for the two wells. A tenfold increase in the Delvina 12 well would double the daily gas production of Albania from 250,000 m^3/day to 520,000 m^3/day. The additional production of 270,000 m^3/day is, essentially, the natural gas necessary to operate the ammonia unit of Train 2 along with its Urea 1 unit at full capacity, and the ammonia unit of Train 1 along with its nitric acid and ammonium nitrate plants at reduced capacity. **Appendix C** includes a copy of the Halliburton proposal for increasing the gas flow from the two Delvina wells. This proposal was received directly from Halliburton.

Further investigations performed by the IFDC team revealed that the 87-km pipeline that carries gas from the Delvina well to Ballsh and Fier was badly corroded and that about 20 km of this pipeline would need replacing to allow operation at the pressure necessary to move gas from Delvina to Fier. No information could be obtained as to what pressure is currently maintained. Apparently some of the pipe is buried, some is above ground, and some is partially buried. It seems that the problem area is in the pipe that is partially buried and the corrosion is at the air-soil interface. This could be normal corrosion caused by differential soil potential. This can be corrected in most cases by cathodic protection, but from all indications this pipeline does not have cathodic protection. There is also a possibility that the corrosion could be caused by high concentrations of CO_2 and/or H_2S in the gas. The actual cause of the corrosion must be determined prior to any repair of the pipeline.

With this background information and based on the Halliburton report, the IFDC team met again at Chevron in Durres to update them on the information we received and to determine if Chevron would have an interest in supplying engineering assistance under contract to USAID through IFDC to review the Delvina well data in conjunction with ALBPETROL. Chevron was very interested in the data presented and would have an interest in getting involved in this work. The IFDC team has since received communications from the London office of Chevron indicating their interest in working in this field and giving a budgetary figure for performing such work.

In summary, it appears that the short supply of natural gas is caused by a combination of bottom-hole well problems and declining reserves in the absence of a drilling program. The total natural gas reserves for the country of Albania appear adequate. Exploratory drilling to find gas and outside funding will be required until flowing gas and higher prices can generate the capital required to sustain a drilling program. Unless capital is provided to Albania to begin this drilling program, it may take from 3-5 years to generate adequate capital from higher prices of present production to start increasing supply to overtake demand. Funds to rework the Delvina well and the possibility to get gas flowing economically could not only give the natural gas industry in Albania a jump start, but could also more quickly solve the problem of low fertilizer production.

4. Economics of Operation

In determining the economics of the operation of the Fier Plant, the unit consumptions of raw materials and feeds and the unit costs of other items for the different production units of the three trains were investigated. The records of unit consumptions kept by the Fier Plant were reviewed by the team and judged to be correctly kept and adequate for analyzing the cost of production for long periods of high-capacity operation. The other cost elements were investigated from records kept by the Accounting Department, and broken down into similar categories for which the team had comparable cost records for similar facilities in the United States.

The cash costs for the production of ammonia, nitric acid, ammonium nitrate, and urea were then calculated. For this study, cash costs are defined as the production costs without considering depreciation or other financial costs, and considering the initial fixed investment as a sunk cost. Cash costs were used because these plants have already been paid for by the country, and their operating costs should be compared with that of plants that have already been paid for. The prices paid by Albania for the equipment and all other materials for each of the plants when they were purchased were:

Train 1	Ammonia, Nitric Acid, Ammonium Nitrate – purchased from Italy in 1966 for 341,423,000 leks, equivalent at that time to:	US $14,000,000
Train 2	Ammonia, Urea – purchased from China in 1976 for 203,439,000 leks, or:	US $24,000,000
Train 3	Ammonia, Urea – purchased from China in 1990 for 311,200,000 leks, or:	US $27,600,000
Other	Workshops, etc., for 26,651,000 leks.	

These amounts were paid by Albania through the delivery of other materials to the seller countries. In the case of the last train, for example, Albania repaid China for the price of the unit with bitumen. The construction of the units, at least in the case of the last two trains, was done directly by Albanian workers, and the cost of this construction was separate from the prices shown above. The construction of the last train, for example, was carried out and paid for by Albania under the direction of a delegation of Chinese personnel (about 60 to 70 people during the peak period).

Although the number of personnel used in these facilities is excessive at 901, as compared to facilities operated in the United States, this situation is not reflected in high personnel costs because of the very low wages paid. The average wage paid at the Fier Plant presently is 2,761 lek/month, which equates to about US $25/month, but wages are equally low throughout the country. It is expected that as wages in the country increase, the operation of this facility will be streamlined, and the work force will decrease maintaining a somewhat constant labor cost.

Although the prices presently paid by the Fier Plant for raw materials are lower, the calculation of production costs performed by the team was done using the prices that the Fier Plant will probably be paying for these materials in the near future (according to information received from ALBPETROL): 5,500 lek/1,000 standard m^3 of natural gas and 17.75 lek/L of gasoline. A higher price level for these two raw materials was also investigated (8,000 lek/1,000 standard m^3 of natural gas and 24 lek/L of gasoline) to verify the production costs at world level prices. The equivalent of these prices in units customarily used in the United States, and considering the present monetary exchange rate of 110 lek/U.S. dollar are:

5,500 leks/1,000 m^3 Natural Gas	=	US $1.42/1,000 ft^3
8,000 leks/1,000 m^3 Natural Gas	=	US $2.06/1,000 ft^3
17.75 leks/L of Gasoline	=	US $0.61/gal
24 leks/L of Gasoline	=	US $0.83/gal

The results from all the cost calculations appear in **Appendix D. Tables 1-6** show summaries of these costs, while **Figures 6-9** show these costs in a graphical form. These costs are summarized as follows:

Cash Cost of Producing Ammonia at the Fier Plant, US $/mt:

Producing Train Capacity Feedstock	1 Full Natural Gas	1 Half Natural Gas	1 Full Gasoline	1 Half Gasoline	2 Full Natural Gas	3 Full Natural Gas
At Expected Imminent Prices for Natural Gas and Gasoline	98.46	114.09	288.92	330.32	94.26	90.10
At World Prices for Natural Gas and Gasoline	120.14	137.69	361.29	402.68	118.81	113.97

Cash Cost of Producing Urea at the Fier Plant, US $/mt:

Producing Unit	Urea 1	Urea 2
At Expected Imminent Prices for Natural Gas	76.94	74.43
At World Prices for Natural Gas	91.76	88.84
At Expected Price of Gasoline[a]	194.51	194.51

a. Using ammonia produced in Train 1 from gasoline.

Cash Cost of Producing Nitric Acid at the Fier Plant, US $/mt:

Train Producing Ammonia Feedstock for Ammonia	1 Natural Gas	1 Gasoline	2 Natural Gas	3 Natural Gas
At Expected Imminent Prices for Natural Gas and Gasoline	36.14	92.90	35.10	33.65

Cash Cost of Producing Ammonium Nitrate at the Fier Plant, US $/mt:

Train Producing Ammonia Feedstock for Ammonia	1 Natural Gas	1 Gasoline	2 Natural Gas	3 Natural Gas
At Expected Imminent Prices for Natural Gas and Gasoline	59.12	145.74	57.38	55.33

As a comparison, the following are approximate average cash costs for the production of ammonia and urea in the United States in smaller plants similar to Fier Trains 2 and 3, considering a price for natural gas of US $1.42/1,000 ft^3 (5,500 leks/1,000 m^3):

	(US $/mt)
Ammonia Cost:	
Raw Material Costs	47.49
Other Cash Costs	41.04
Total Cash Cost	88.53
Urea Cost:	
Ammonia Costs	51.34
Other Cash Costs	25.00
Total Cash Cost	76.34

The above data indicate that the current cash costs of production of urea at the Fier plant using natural gas as a feedstock, US $74-$77/mt of urea, are competitive with costs in similar plants at U.S. locations; i.e., about US $76/mt. However, cash costs of production of urea in larger plants in the United States averages about US $9.00/mt less than in the smaller plants. The majority of the urea entering international markets is produced in the larger plants, for which the present selling price is about US $130/mt. If the natural gas price increases within Albania to planned levels, the cash cost of producing urea will be somewhat higher, at about US $90/mt, but still leaving a substantial margin of US $40/mt considering the present selling price of urea of US $130/mt, with the expectation of increasing it to US $140/mt within the next several months. This indicates that the production of urea can be profitable for the Fier Plant if natural gas is used as feedstock. The use of gasoline almost triples the cost of production of ammonia and of urea, making this operation highly unprofitable, and not worthy of consideration as a regular mode of operation for the Fier Plant.

Table 7 and **Figure 10** compare the cash cost of producing ammonium nitrate and urea. On a nitrogen basis, the production cost of ammonium nitrate produced with natural gas is comparable to that of urea, between US $162 and 171/mt N if ammonia from Trains 2 or 3 is used, and the natural gas price is assumed at 5,500 lek/1,000 m^3. If ammonia from Train 1 is used the cost is somewhat higher at US $176/mt N. If gasoline is used in Train 1, the cost of ammonium nitrate more than doubles to US $435/mt N.

An analysis of the cost data presented indicates that it is preferable to produce ammonia in Train 3, with the ammonia unit of Train 2 as a second option, and that of Train 1 as a last option.

If the ammonia and urea units of Trains 2 and 3 are capable of producing the required amounts of fertilizers to meet the agricultural needs of the country, the major repairs required to bring the ammonia unit of Train 1 back to adequate operation should not be considered. The only reasons for operating the ammonia unit of Train 1 are to be able to produce ammonia when natural gas is not available (using gasoline as feedstock), or when natural gas is available at very low rates (above 67,200 m^3 but below 140,000 m^3/day). The operation with gasoline is so expensive, that if no natural gas is available, it is economically preferable to import urea into Albania. The operation of the plant with very low rates of natural gas should be analyzed once again after a determination is made of the potential to increase the availability of natural gas in Albania, and after the fertilizer market situation in Albania is better defined.

5. Possibility of Importing Gasoline as Feedstock

As previously indicated, the operation of the ammonia unit of Train 1 with gasoline is not justifiable due to the excessive cost of the operation, which is close to three times as much as operating with natural gas (US $289 versus US $90/mt of ammonia), and which yields a urea product at over twice the cost of what it costs with natural gas (US $195/mt versus US $75/mt), a cost which is higher than the market price for urea in Albania (US $130/mt), and higher than present international prices (about US $150/mt).

However, the possibility of importing gasoline was investigated, in case it becomes necessary to do so as a stop-gap measure to meet production requirements. In this case, this operation would be done using the terminal at Vlora, some 40 km southwest of the city of Fier. The gasoline would then be transported to Fier by one of the following possible ways: (1) using an available pipeline in reverse flow, (2) using truck tankers, or (3) using the existing railway system. Information regarding the use of the Vlora port and the mode of transporting the gasoline to the Fier Plant was obtained during a visit of the team to the port facilities at Vlora.

If gasoline is used to produce ammonia in Train 1, the rate at which gasoline would be fed to the unit would be 52.4 mt/day (18,660 gal/day), or about one-half the maximum capacity of the unit which is the present limitation of the unit imposed by the oxygen compressor which is damaged. At this one-half rate, the effective production of ammonium nitrate from Train 1 would be about 177 mt/day, although this unit would have to operate on an on-off mode at its minimum capacity of about 200 mt/day. Because of this, the transportation of gasoline from the port to the Fier Plant would have to take place at a rate higher than 52.4 mt/day to keep the units in operation. Irrespective of the transportation mode used to bring the gasoline to the Fier Plant, the gasoline would end up in the three gasoline tanks at the Fier Plant which have a combined usable storage capacity for gasoline of 2,550 m^3, or about 1,890 mt, which is equivalent to about 36 days of operation of the ammonia unit at the one-half rate. One of the storage tanks has been damaged by corrosion, but the Fier Plant personnel promised to fully repair it at their own expense in time for any importation of gasoline.

At the Vlora port, the ship docking pier is about 7 km from the shore. Ships of up to 35,000 mt (draft of 13 m) can be received. In the case of gasoline, this material would be unloaded using two pipelines (one of 8 inches in diameter, and one of 10 inches in diameter) which come to shore. The gasoline would be placed in up to seven carbon steel tanks of 5,000 m^3 capacity each. The ship unloading process for a 20,000 mt tanker took 62 h, using a tanker discharge pressure of 7 bars, during the week prior to the team's visit to the port. The maximum pressure that the pipelines can stand at the tanker point is 10 bars. The charges of the port facility for unloading the ship are 0.24 lek/L. Duties and other charges would probably be waived by Albania. The cost of storage at the port was not available, and would have to be obtained prior to importing gasoline.

If gasoline is imported and transported to the Fier Plant using the pipeline that comes from the refinery at Ballsh, a shut-off valve will have to be installed in the portion of the pipeline (159 mm diameter and 6 mm wall thickness) between Ballsh and the Fier Plant, to be able to use the pipeline in a reverse-flow mode. Besides, certain sections of the pipeline would have to be repaired (particularly the section of the pipeline which traverses through the area of the salt mining operation on the shores of Lake Nartes). The repair of the pipeline would take about 2 months. Patrolling of the pipeline may have to be increased during the piping of gasoline to prevent unauthorized tapping of the line as has been the case in similar situations. Presently, one patrolman is used for every 8 km of pipeline, but during the gasoline unloading, it would be wise to increase the number of patrolmen to one

for every 2 to 4 km. The cost of this would be minimal, considering that the gasoline transfer can be done at rates of about 1,000 m^3/day, and that salaries in the country are extremely low, at the equivalent of about US $20/workmonth. The charges for using the pipeline were also not available during our visit, and would have to be obtained when programming the importation of gasoline.

If the use of truck tankers is considered, it may be necessary to either import trucks for this operation, or modify about seven of the Navistar trucks that were imported in 1992 for distributing fertilizers. Consultations were made with Navistar and other truck manufacturers in the United States to obtain the expected cost of modifying seven of the trucks into tankers capable of hauling gasoline. A very comprehensive reply received from HR International, Inc. indicates that the retrofit components would have an f.o.b. price of about US $70,000-$75,000. This reply is included in **Appendix E**. Including the freight to Albania and the actual truck modification work performed, the cost of modifying the seven trucks would probably be close to US $100,000. This value does not include the cost of transporting the gasoline, which would be an added expense. Considering that each modified truck can haul about 2,000 gal/trip, that it takes about 4 h for each truck to make a round trip from the port to the Fier Plant, and that truck loading at the port is limited to daylight hours, it is estimated that each truck can transport 4,000 gal/day, and that five trucks would be required considering a totally efficient operation. Two extra trucks have been considered to offset inefficiencies in the operation, and to protect against truck outages. The trucks would unload the gasoline directly at the Fier Plant tanks.

If the railroad mode is used to transport the gasoline from the port to the Fier Plant, a railroad filling station would have to be constructed at the terminal to load directly from the ship. Two alternative sites were described by the port officials. These two sites are shown on **Figure 11**. The costs for construction of these two alternate filling stations are 1,378,960 lek and 7,723,160 lek, or about US $12,500 and US $70,200. The time needed to construct either of the two filling stations would be about 3 months. Each railroad car could transport about 50,000 L/trip, and the rate at which they could be filled and sent would be about 12/day for a total of 600 m^3 (445 mt) of gasoline per day. The cost of the transportation was not available, and would have to be further investigated prior to importing gasoline.

6. Process and Mechanical Problems Affecting Operation

During the visit to the Fier Plant, the team identified several situations that require action in order to permit safe and continuous production of fertilizers from the different units of the complex. These situations are listed below.

Two-Year Presence of Expert/Advisor–It is highly recommended that all of the activities mentioned in this listing of solutions to problems be coordinated by a well-qualified and seasoned expert in ammonia, urea, nitric acid, and ammonium nitrate production. This expert would (1) coordinate the activities set forth as recommendations from this study, (2) serve as an advisor to the Fier Plant in technical matters, (3) look after the rightful disbursement of funds provided by USAID and/or other donors or lenders, and (4) conduct studies to improve operating and environmental conditions and product quality. More details about the activities and cost of this advisor are given in the section of this report dealing with the recommended future use of plants and actions to be taken.

Repair of Steam Turbine on Air Compressor of Ammonium Nitrate Unit–The labyrinth seals in the turbine driver of the air compressor in the ammonium nitrate unit have been worn out and need replacing to avoid excessive steam consumptions. Repair of this unit was attempted, but results were not totally successful. It is recommended to send the driver rotor of this turbine to a repair shop that specializes in this type of repair (ideally to Franco Tossi, the Italian manufacturer) for installation of new labyrinths and for a complete tear down and overhaul. It is estimated that this repair will cost US $175,000.

Oxygen Compressor of Ammonia Unit in Train 1–One of the two oxygen compressors (manufactured by Sulzer Burckhardt-Engineering Works Ltd., Wintherthur, Switzerland) in the air separation plant (designed by Linde) which is part of the ammonia unit of Train 1, failed in 1991. The remains of this failed compressor do not permit repairs or even reconstruction, requiring a new replacement unit. The remaining compressor can only sustain operation in the ammonia unit at 51%-52% of full design capacity. The possibility of purchasing a used compressor was investigated unsuccessfully. The need for replacing this compressor will depend on the decision to retain the ammonia unit of Train 1 as an operable unit, and to once again bring it up to 100% production capacity. Investigations with the original manufacturer indicate that a new replacement for this compressor could be obtained for about US $470,000, and that the shortest delivery time for this equipment

would be 7 months. The offer received from Sulzer for the supply of a new compressor is included in **Appendix F.**

Nitrogen Regenerators and Oxygen Regenerator of the Air Separation Unit – These vessels are in need of welding and repair. These vessels are fabricated from aluminum and operate under stressful conditions of pressure and very low temperature. Therefore, the welding has to be carried out under critical conditions by very skilled expatriate experts in the field. An estimated amount of US $25,000 would be needed for this repair, which should be considered only if a decision is made to maintain the ammonia unit of Train 1 in an operable condition.

Nitric Acid Converter Catalyst – Funds in the amount of US $250,000 are included for a spare nitric acid converter catalyst charge (gauzes) which is approximately 500 troy oz. (14.2 kg) of 90% platinum and 10% rhodium. The plant has some used catalyst gauzes and dust of precious materials which can be reclaimed to possibly provide one complete new charge – this cannot be confirmed until the reclaiming is complete. A spare charge is needed while one charge is being processed to keep the plant operating efficiently. **Table 8** shows a balance of the available and needed catalyst. This will be needed if Train 1 is to be kept in operable condition.

pH Meter and Contol Equipment – At the present time there is no method of monitoring the pH of the solution in the ammonium nitrate neutralizer. Control of pH in the neutralizer is necessary to reduce ammonia losses. The ammonia losses represent a loss of energy and money, and constitute a source of pollution into the atmosphere. US $15,000 is included to install this monitor and control device. This would be needed if a decision is made to maintain Train 1 in operable condition.

Electric Motors for High Pressure Ammonia and Carbamate Pumps – The high pressure, positive-displacement carbamate and ammonia pumps in the two Chinese urea plants are driven by open case electric motors which apparently also have defects in the windings insulation. When shut down for short periods of time, the motors will not start or if they do they short and burn which causes further problems in the process and operation of the plants. US $80,000 is included to replace all twelve motors with new totally-enclosed fan-cooled (TEFC) explosion proof, industrial use electric motors.

Air Metering Devices for Urea Units–Air metering devices need to be installed to measure the amount of air added as passivation air (used to protect the equipment from corrosion) to the urea reactor. This will allow operation at only the required amount of air needed to passivate the equipment and should also allow for a slight increase in urea production by limiting the amount of air going into the reactor. US $5,000 for each urea unit is included. If the plants are to be kept operable, this is a critical item which should be installed as soon as possible because of danger of explosion.

Bagged Urea Warehouse–At the present time the urea plant storage capability is limited to two 2,000-ton bulk urea warehouses. Limited storage is available outside in the marketplace. Additional storage for bagged material at the plant is needed. A sum of US $1,500,000 is included to construct an 18,000-mt capacity warehouse for bagged urea which is equivalent to approximately 2 months of continuous operation of one urea unit at full capacity.

Train 2 Ammonia Unit Primary Reformer Bricks–The reformer furnace in the Chinese-constructed ammonia plant of Train 2 has 436 individual burners which are covered with refractory brick. Due to the lack of availability of dry (pure) natural gas, associated gas produced in conjunction with crude oil production which contains heavy hydrocarbons has been used as feedstock and fuel to this unit. This gas burns hotter than dry gas and has damaged the burners. Part of the burners have melted with the high temperature produced by the combustion of the heavy hydrocarbons. As a result of removing the burners for repair, the refractory brick on the walls and arch has failed and major repair is needed. US $75,000 is included for this repair.

Low-Temperature-Shift Catalyst–Funds in the amount of US $300,000 are needed to purchase a spare charge (25 m^3) of low-temperature-shift (LTS) copper/zinc catalyst for the Chinese-constructed ammonia units. The Fier Plant recently purchased a spare charge of primary reformer catalyst with a loan from Germany and has a complete set of spare charges of all other catalysts. A listing of the catalysts and supplies received from Germany is shown in **Table 9**.

Arsenic Activator, Raschig Rings, and Finned Tube Coil for Ammonia Units–Other needed supplies for the Fier Plant are: (1) 4 mt of arsenic for CO_2 removal in ammonia unit of Train 1, (2) 250 m^3 of raschig rings, used as packing material for the tower of the CO_2 removal section, for the ammonia unit of Train 2, and (3) finned tube coil for steam

production. The finned tube coil located in the convection section of the primary reformer in the ammonia unit of Train 2 needs to be repaired.

7. Spare Parts Limitations

The Fier Plant has three separate and distinct fertilizer plants and while the Chinese ammonia and urea units in Trains 2 and 3 are similar, spare parts for most of the pumps and compressors in the units are not interchangeable. Therefore, the funds or working capital in spare parts inventory must be greater than it would be if the units were such as to use interchangeable spare parts.

The Fier Plant has a well-equipped mechanical department and shop and are well adept at fabricating a great number of their spare parts. In fact, since the changes which occurred in the political structure, the availability of spare parts from China has diminished greatly and the Fier Plant has had to improvise and fabricate many of its spare parts in order to operate. Accordingly, the spare parts inventory at the Fier Plant of items such as pump shafts, gaskets, and items that they can produce is adequate but their stock of metals and other raw materials used in the spare part fabrication is depleted for lack of capital, and because of this they are no longer producing many spare parts.

It is estimated that the Fier Plant has about US $1-2 million in spare parts inventory, but specialized parts for compressors and pumps such as valve assemblies, pistons, sleeves, head assemblies, etc. are needed. In many cases it will be necessary to purchase complete assemblies of equipment to substitute for existing ones since repair parts for existing are no longer available from the manufacturers.

The maintenance personnel at the Fier Plant keep an extremely well-developed (although manual) inventory system for all spare parts in their warehouses. This greatly facilitated preparation of a very comprehensive list of the critically needed spare parts and materials to maintain the units in operable condition. The comprehensive list appears in **Appendix G.** It is important to note that although these parts will be placed in stock when purchased, it will still be necessary for the Fier Plant to develop a system for maintaining the inventory as parts are used.

A summary of the required spare parts is as follows, in U.S. dollars:

	Production Train Where Spare Parts Are Required				
	Train 1	Train 2	Train 3	All Trains	Total
Pumps/compressors	333,870	42,100			375,970
Bearings and seals				9,290	9,290
Miscellaneous		4,300		366,450	370,750
Tools/machinery				222,250	222,250
Instruments[a]	44,900	12,600	8,000		65,500
Electrical				117,580	117,580
Other[b]	499,230	100,000	239,430		838,660
	878,000	159,000	247,430	715,570	2,000,000

a. Half of the instruments shown for Train 1 are for nitric acid or ammonium nitrate production.
b. Required to purchase assemblies of equipment, and parts not identified during plant visit.

8. Environmental and Safety Problems

Albania Nitrogen Industry and the Environment

Compared to other industries, the nitrogen industry in Albania is relatively modern. The Fier Plant facilities have been put into operation during the last 25 years or less. Although the Fier Plant facilities were equipped to a considerable extent with imported technology, the technical level of the technologies acquired was sufficiently high in energy conservation and pollution control at the time of startup to meet the local rather low environmental regulations and standards. Eastern Europe-type plants were mainly designed and constructed based on unification and simplicity of operation. This facilitated the mastering of the new plants and the provision for spare parts. At that time energy conservation and environmental pollution control were not considered very important issues.

Effects of Pollutants in the Environment

In certain circumstances, air and water pollution can have serious effects on property and on plant and animal life, in addition to being a potential hazard to human health. Air

and water pollution is seldom a simple problem of a fixed concentration of an individual pollutant. Synergistic effects exist which must be considered. The combined effect of some pollutants is more dangerous than the effects of similar concentrations of either pollutant individually. A brief description follows of the effects on the environment of some individual pollutants released by ammonia, ammonium nitrate, and urea plants.

Air Pollution

Oxides of Nitrogen–Oxides of nitrogen can have biological and phytotoxic effects. Concentrations as low as 0.1 ppm can contribute to the formation of photochemical smog, which is a very unpleasant form of pollution. This type of pollution only occurs under specific meteorological conditions, usually where atmospheric inversions are common. Nitrogen dioxide, through its capacity to form nitric acid, contributes to acid rain and promotes acid-catalyzed reactions in atmospheric aerosols. In addition, nitrogen dioxide is also the essential reactant in the formation of peroxyacetylnitrate. This compound is a lachrymatory constituent of urban smog.

Ammonia–Ammonia emissions per se are unlikely to exert any harmful effects. There is, however, a secondary effect that can be considerable nuisance. Because of its alkaline properties, ammonia is irritating to the mucous membranes of the nose, throat, and eyes, and, in high concentrations, to the skin. Mild irritation to the throat is observed at 50 ppm, but severe effects require several hundred parts per million. It has been shown that, in the presence of ammonia, the main oxidation product of sulfur dioxide in the atmosphere is ammonium sulfate aerosol. In some geographical locations where advection inversions give rise to stable fogs, pollution from moderately high stacks can be trapped and brought down to ground level. The presence of ammonium sulfate considerably increases the density and unpleasantness of the fog.

Carbon Dioxide–Appreciable quantities of carbon dioxide have been discharged for years into the atmosphere, and most people assume that this gas is relatively harmless. At the present time, carbon dioxide is considered one of the main atmospheric constituents responsible for the so-called global warming effect or greenhouse effect. Massive releases of carbon dioxide into the atmosphere are believed to cause the earth's atmosphere to become like a huge greenhouse with resultant rise in atmospheric temperature. There are speculations that this global warming will even cause part of the polar caps to melt, causing ocean levels to rise and cover land that at present is above sea level.

Oxides of Sulfur – Plants are more sensitive to sulfur dioxide than is man. They vary in susceptibility, but injury to the most sensitive species can occur at concentrations as low as 0.15 ppm. Other factors, such as temperature, humidity, light intensity, and nutrition, can modify the effects. The effects of sulfur dioxide at low concentrations have been studied extensively in connection with its presence in polluted atmospheres. The lifetime of sulfur dioxide is reported to be probably only a few days. It is removed by direct absorption by vegetation, soil, and water and by chemical reactions in the atmosphere. In the presence of sunlight, oxidation to sulfur trioxide can occur, leading to the formation of sulfuric acid aerosol. If ammonia is also present, there is evidence that ammonium sulfate aerosol is formed. Sulfur dioxide emissions, particularly from coal-fired plants, are considered to be a major cause of "acid rain."

Urea – Urea enters the air emissions from prilling towers and from scrubbing systems used in conjunction with granulation units and prilling towers. Some old plants, where there is no pollution control or the only control measure is a battery of dry cyclones, have significant emissions of fine dust. There is very little available information on the effect of this emission on the environment. In practice, the prevailing winds tend to concentrate the urea dust into a relatively small sector downwind from the factory. In general, once again the meteorological conditions are of ultimate importance in determining the amount of damage caused by this type of dust emissions.

Water Pollution

Water pollution is another important area requiring attention. Pollutants in water may have three basic effects upon the environment: (1) they can cause biological or physiological changes in organisms in the receiving water or those using the water, (2) they can affect recovery or re-use of the receiving water, and (3) they can affect the aesthetic or recreational value of the receiving water.

Ammonia – Ammoniacal nitrogen is assimilated more rapidly by plant life than any other form of nitrogen. Although ammonium compounds are converted into nitrates by nitrifying bacteria in water, they may in themselves contribute to eutrophication. Because of the bacterial oxidation in water, dissolved ammonia can exert an oxygen demand. Ammonia in water can be toxic to fish at concentrations of 2-3 g/m^3.

When water is disinfected with chlorine, which is a common procedure, any ammonia present in the water will react to form chloramines. The chloramines are less effective as

bactericides and are toxic to fish at concentrations as low as 0.4 g/m^3. The presence of ammonia in water supplied to treatment plants can cause upsets in the chlorination process.

Urea–Although urea readily undergoes biochemical decomposition, it does not disturb the biochemical oxygen demand of watercourses at concentrations up to 500 g/m^3. This is because the first stage of oxidation to ammonium carbonate in the presence of the enzyme urease does not require the participation of the oxygen dissolved in the water. It is doubtful that urea contributes significantly to eutrophication.

Sulfate–Sulfate in water is not considered to be toxic in moderate amounts. At high concentrations in drinking water, sulfate can have a laxative effect. High sulfate concentration in recycled boiler feedwater or cooling water will increase the necessity for purging and create a larger waste stream.

Nitrate–The nitrate ion is also a cause of eutrophication. Algal development can readily occur in water containing less than 1 g/m^3 of nitrate-N. Nitrate can be toxic to humans and animals. In humans, babies can suffer methemoglobinemia caused by microbial reduction of nitrate to nitrite and the subsequent absorption of nitrite in the blood. Nitrate has also been claimed to produce stomach cancer, malformations of the heart, and cardiovascular diseases.

It is worthwhile to mention some other possible pollutants that have not been discussed, e.g., spent catalyst from ammonia plants, contamination to cooling water from treatment chemicals, spent solutions for CO_2 and CO removal, spent ion exchange resins, and thermal and noise pollution.

Recommended Initial Pollution Control Equipment for Fier Plant

Holding Ponds–Generally, disposal of effluents in the river and sea is harmful and results in pollution. It is accepted worldwide that water pollution is defined as the introduction by man, directly or indirectly, of substance or energy into the aquatic environment resulting in such deleterious effects as hazards to human health, harm to living resources and to aquatic ecosystems, damage to amenities, or interference with other legitimate uses of water. If fertilizer wastes are treated in such a manner prior to discharge that they do not give rise to any deleterious effect, they cannot be regarded as pollutants.

42

However, it is always beneficial to recover and recycle water to the maximum extent possible. On this basis, current efforts in many plants are toward zero liquid discharge.

At present the Albanian Government has not mandated a strict water quality standard, but it is highly possible that in the near future Albania must comply with pollution standards set in other countries. In order to maintain water quality requirements for release outside the plant, holding ponds for the Fier Plant for dirty water process streams and clean water will be required before water is released from the plant to the adjacent river. The process pond will cover approximately 0.4 ha, and the clean water pond will cover about 0.8 ha. The ponds will be equipped with polyethylene linings. The Fier Plant sewer system should be modified to aid in isolating dirty or process water from clean water so that minimal storage of dirty water will be necessary and the water can be diverted between ponds for treating before being released. It is estimated that US $1,800,000 will be needed to construct holding ponds for the Fier Plant.

Nitric Acid Fume Abater–After the absorption, the tail gas containing mainly nitrogen, water, vapor, oxygen, and mixed nitric oxides is normally what characterizes most nitric acid plants by the reddish brown plume.

Pollution control laws set strict limits to stack emissions. The maximum concentration allowed, for example, in the United States is equivalent to 200 ppm of NO_x (500 ppm in old plants), and in Japan 200 ppm is a universal standard. New plants and old ones equally have to adopt NO_x abatement systems. At present the Fier Plant has been operating with a tail gas plume with a NO_x concentration of about 1,200 to 1,500 ppm according to the information provided by Fier Plant staff. In order to comply with world standards, a Fume Abater® for the tail gas plume is recommended for the nitric acid unit at Fier Plant. The estimated cost for this equipment is US $700,000.

Ammonium Nitrate Unit Air Scrubbing–Process steps responsible for air emissions in ammonium nitrate production are as follows: (1) neutralization, (2) evaporation and concentration, (3) prilling, and (4) cooling.

In the neutralizer the vapor stream of the top of the neutralization reactor is primarily steam with some ammonia and ammonium nitrate particulates present. The lower the pH (excess of nitric acid), the lower the ammonia emissions, while the higher the pressure, the higher the ammonia emissions.

In the evaporator/concentrator ammonia emissions should not be a problem because the pH in this step should range between 5.2 and 5.4. Ammonium nitrate particulate emissions in the vapor streams of the evaporators generally fall (for most plants) in the range of 0.1 to 1.0 kg/metric ton of ammonium nitrate.

In the prilling tower, which involves prills falling through a countercurrent flow of air, ammonium nitrate dust is generated. The smaller particulates in the submicron range resulting from the evaporation and subsequent condensation and solidification of the material being prilled are entrained in the air leaving the tower. It is recommended that the Fier Plant should install a demister and scrubbing equipment to treat the gas streams from these items (neutralizer, evaporator/concentrator, and the prilling tower). The estimated cost for the equipment needed to treat the ammonium nitrate unit gas streams is US $1,000,000.

In addition, it is contemplated that about 33% of the air from the prilling tower will be scrubbed. This should have an added effect of increasing air flow in the tower and improving product cooling which, according to Fier Plant operating staff, is needed.

Urea Unit Air Scrubbing–Process steps for air emissions in urea production are as follows: (1) solution formation, (2) concentration, and (3) prilling. The solution formation step is not a major source of air contamination in urea production. Concentration and prilling have emissions analogous to ammonium nitrate production. Besides particulate matter, urea prilling towers have some ammonia emissions that can result from urea decomposition.

It is recommended that the Fier Plant should install equipment to treat the air or gas streams from evaporators and prilling tower of the two urea plants. It is contemplated that the total air stream from each prilling tower will be treated, which like the ammonium nitrate prilling tower, will provide added air flow and cooling capacity which according to the Fier Plant operating staff is needed. A total of US $1,100,000 is the estimated cost for equipment to treat the gas streams in each urea unit. A total of US $2,200,000 will be needed for both urea units.

Catalytic Converter for Hydrogen Removal–At the present time the Fier Plant is venting the tail gas from both urea units. The tail gas instead of being scrubbed is vented

into the atmosphere because it contains hydrogen which would be recycled to the process, thus creating the risk of an explosion. As a result of venting the tail gas the Fier Plant is not recovering ammonia that could easily be recycled into the process. This represents a significant source of pollution and loss of energy which increase the cost of production. The amount of ammonia vented into the atmosphere while operating the urea unit at full capacity represents the equivalent of 3,000 mt/year as urea product.

It is recommended to install a catalytic hydrogen removal unit (like most urea plants have installed) to (1) allow recovery of the ammonia that is vented into the atmosphere and eliminate the pollution source and (2) to make the plant safer by avoiding the risk of an explosion. The estimated cost for the hydrogen removal units is US $300,000 for both plants.

Silencer for Ammonia Unit of Train 2 – US $10,000 to construct and install a silencer for the ammonia unit of Train 2 to reduce noise level during start up and venting. The Chinese installed one on the ammonia unit of Train 3 but for some reason did not install one on this unit.

A total estimated expenditure of US $6,010,000 is anticipated to reduce pollution emissions and move toward compliance with stricter environmental regulations. This is the first immediate step to make the Fier Plant more environmentally sound. Later, the Fier Plant should be analyzed while the plants are in operation to decide other measures necessary to fine tune pollution control. As shown in **Appendix H** most of the equipment needed can be supplied by Monsanto Enviro-Chem, and technical assistance can be provided from their offices located in Brussels, Belgium or Bucharest, Romania.

9. Retrofits for Plant Modernization and Increased Efficiency

It should be pointed out that by refurbishing some equipment and installing some of the environmental equipment already recommended in this report, an improvement in product quality and a decrease in losses of product will result, making the production units more efficient.

Two of the major areas in ammonia units of this type considered for retrofitting are the converter and reforming furnace. There are many proven technologies now available

for modernization of ammonia synthesis converters. While US $1,500,000 for the Train 2 and 3 ammonia units has been included to retrofit the converters with a Casale S.A. modification, more study will be required to determine if the modification has an acceptable payout time and worthwhile rate of return on the investment.

Funds in the amount of US $750,000 for each ammonia unit in Trains 2 and 3 have been included for heat recovery retrofits in the reforming furnaces, but as in the case of the converter modifications, a study must be completed to determine the feasibility, rate of return on the investment, and payout.

The total of US $4,500,000 funds provided for these items are to be spent only if further studies prove that the retrofits are feasible and justified, and that the expenditures should be made. Detailed study during plant operation will be required.

10. Company Structure

Personnel

As part of this study, the IFDC team looked at the Fier Plant's organizational structure. At the end of 1992, the Fier Plant had a total of 1,251 people on its work force. The 1,251 people were allocated to the plant following a plan approved by the Ministry of Industry, Mineral Resources and Energy. This plan was developed for the time when all three trains in the plant were operating at full production capacity. **Tables 10, 11, and 12** show a breakdown per train and location of the people according to the approved plan for the Fier Plant. The present work force of the Fier Plant includes a total of 901 people. **Table 13** shows a breakdown of the ac ıal work force.

Because of the limited supply of natural gas the plants do not operate at full capacity. The current natural gas supply level is sufficient for operation of Train 2 for about 7 months out of the year and that at a reduced rate. During the winter (cold) months all three trains shut down because of low natural gas availability. At the present time the workers arrive at the plant and if there is work to be done like maintenance, cleaning, etc., they will stay and work, if not, they leave and come back the next day.

Under the past system in Albania, this work force was more than sufficient to operate the plant. Given the new market economy that is being introduced, and now that Albania

46

will have to compete with products from the international market, a closer look should be given to the amount of people working at the Fier Plant. It is expected that as salaries in the country (and consequently in the Fier Plant) rise to match and be competitive with the world economy, the Fier Plant will have to streamline its personnel to remain efficient and profitable.

Training

The most important resource of an organization is its human resource – the people who provide the organization with their work, talent, creativity, and drive. Thus, among the most critical tasks of an organization are training and development of the people who will help the organization meet their goals. Without well-trained and skilled people, companies will never operate efficiently in a profitable way. The need to train new employees or individuals within the company to keep them updated and/or individuals that are being promoted is self-evident; new jobs, new systems, and new methods require training in new skills.

In the particular case of the Fier Plant, managerial as well as technical personnel need to be trained in technical and economic aspects, to overcome the isolation that Albania has experienced until very recently.

Now that Albania is being more closely integrated with the rest of the world, the Fier Plant will have to (1) compete against products from international markets, (2) purchase materials and equipment from the world market, (3) become more energy efficient, and (4) comply with environmental control standards.

In IFDC's opinion, training programs for some selected staff members of the Fier Plant need to be developed. Based on IFDC's extensive experience in training programs, the following areas are recommended to be covered:

1. *Process Economics, Management, and Privatization* – This training program is fundamental for the Fier Plant personnel because of the changes that the country is undergoing at the present time.

   This training program should be held in Albania at the Fier Plant. The personnel that should attend this program should be those involved in the fields of management, accounting, finance, production, and maintenance. The participants will be exposed to

subjects such as conversion cost and production cost analysis, return on investment, and financial analysis. They will also have the opportunity to observe first-hand how, with the aid of desk top or lap top computers, a sensitivity analysis can be performed. In addition, the training program will cover privatization with case studies and the advantages, disadvantages, and problems that can be expected. A training program of this type will involve 1 week of classroom-type instruction. About three or four IFDC staff members will be required to cover the program. Handouts would be prepared and distributed. The estimated cost for such a program including air tickets, travel expenses, salaries, and benefits for the IFDC personnel, overhead, hand out materials, and communications is about US $30,000.

2. *Technical Aspects of Fertilizer Production*–A technical training program that will cover product handling techniques, latest developments in production and management techniques, and environmental control, including visits to modern nitrogen fertilizer plants in the United States. The field visits will help the participants obtain information in the technical aspects of the processes, production costs, maintenance fundamentals, latest technical advances mainly related to pollution control, and computer use in the fertilizer industry.

   This program will be oriented to production and maintenance engineers as well as environmentally oriented personnel.

   The program will be held in the United States with 1 week of classroom-type instruction and 1 week of field visits. The classroom-type training program will be held at IFDC Headquarters in Muscle Shoals, Alabama. The participants should be fluent in English to get maximum benefit from the program.

   The estimated cost for this training program, including round trip air tickets for the participants from Albania to the United States, living expenses, IFDC personnel salaries benefits, overhead, materials to be given to the participants, communication costs, and local transportation inside the United States for the field visits is about US $35,000. Also included is the cost for living expenses for the participants and for the IFDC personnel traveling with the participants on the field trips.

3. *Quality Control and Chemical Analysis*–This training program is needed because in the future Albania will have to compete with imported fertilizers and will most likely

export fertilizer to generate foreign exchange. The training program will be oriented to the Fier Plant laboratory supervisors involved in the operation of production and quality control laboratories. The training program should be held at IFDC Headquarters, conducted by IFDC personnel and involve actual hands-on analysis. It is expected that three participants will travel to IFDC Headquarters along with a technical translator. The program will last 3 weeks. The participants will be exposed to (1) physical properties tests methods used in the fertilizer industry to test product quality, (2) techniques and equipment for chemical analysis of raw materials and finished products as well as for sampling, (3) statistical analysis of representative samples, and (4) monitoring gaseous and liquid effluents for pollution control. It is estimated that this training program will cost about US $60,000. This cost includes round trip airplane tickets and living expenses of the participants, salaries and benefits of the IFDC personnel, overhead, materials, and communications.

11. Recommended Future Use of Units and Actions to Be Taken

General

The viability of any fertilizer plant depends on the economics with which that plant can produce fertilizers. In the case of the Fier Plant in particular, it is difficult at this time to predict the future viability of the operation due to the state of flux of the economy in the country while in this transitional state from a centrally planned economy to a market economy. However, it is only logical to assume that the Fier Plant will be successful for the following reasons:

- The initial investment cost has already been made. The process units have already been built and paid for, and for the greater part they are ready to operate. The installation of comparable new units would require an investment in the order of about US $400,000,000.

- The staff and operating personnel at the Fier plant are well qualified and competent to operate the complex. As has been demonstrated by the previous 27 years of operation during very adverse conditions, the Albanian personnel (workers, supervisors, and management staff) were able to successfully run the units, adapting to changes of feedstocks, lack of spare parts, and inadequate quality of much of the Chinese equipment in Trains 2 and 3.

- There is a sizable amount of natural gas reserves in the country. As was mentioned previously, although the present daily production rate of natural gas is not enough for full operation of the Fier Plant, the proven reserves of the country, as published in the *Oil and Gas Journal*, indicate that sufficient natural gas is available in Albania for operation of the plants during their useful lifetime.

Besides these considerations, Albania would benefit from the operation of the Fier Plant not only from the obvious point of being self-sufficient in the production of nitrogen fertilizers for agricultural development and food security, but the complex would provide jobs and stimulate the local economy, as well as provide a focus for the development of the free market system.

It may take some time to get the natural gas situation resolved to the point where the Fier Plant can operate at the required capacity to fully meet the nitrogen fertilizer needs of the country. In the mean time, it may be necessary for this complex to operate using gasoline to supplement the natural gas quota allotted by ALBPETROL, or better yet to import some amount of nitrogen fertilizers as a stop-gap measure until the natural gas situation is resolved. This is not foreseen to be necessary during the current year. The situation, however, will have to be re-analyzed by the end of 1993 after a clearer picture of fertilizer consumption and gas production levels are determined.

The capacity at which the units should be operated is calculated based on the present day nitrogen market, estimated using the 1992 sale figures. Although the consumption of nitrogen fertilizers in Albania during the decade of the 1980s was in the order of 70,000 mt of N/year or more, as can be seen in the following data as reported by the Food and Agriculture Organization of the United Nations (FAO) in their "FAO Fertilizer Tape," it is not expected that these consumptions will be achieved again for some time.

Historical Consumption of Nitrogen Fertilizers in Albania

1981	72,500 mt N	1986	75,000 mt N
1982	70,800 mt N	1987	66,100 mt N
1983	73,000 mt N	1988	69,300 mt N
1984	75,000 mt N	1989	79,900 mt N
1985	75,000 mt N	1990	73,400 mt N

The consumption of nitrogen fertilizers indicated by these figures corresponds to a period of time when these materials were being applied without any regard for agricultural economics, and when the cost of fertilizers or of fertilization was not even considered. It is very difficult to predict the consumption of fertilizers at this moment, due to the abrupt economic changes that are taking place in the country. This is why the consumptions for 1993 and 1994 are being calculated only on the basis of what was consumed or sold in the 1992 crop season.

The total amount of nitrogen fertilizers sold in the country during 1992 is calculated considering the materials that were available for sale in that year and the materials left in storage at the end. The following materials were available for sale:

12,800 mt of urea produced by the Fier Plant	5,890 mt N
8,140 mt of ammonium nitrate produced by the Fier Plant	2,690 mt N
19,690 mt of urea imported by USAID/IFDC	9,060 mt N
9,870 mt of DAP imported by USAID/IFDC	1,780 mt N
50,500 mt of nitrogen fertilizers available for sale	19,420 mt N

According to records from the Fier Plant, there is still 5,000 mt of urea in storage in state warehouses, and 2,000 mt of urea in bulk storage at the plant, and according to records from the IFDC offices in Tirana, there is still 6,500 mt of DAP in storage in warehouses. This calculates to a total of 13,500 mt of product, or 4,390 mt of N presently available, and represents a total nitrogen fertilizer sale for the country in 1992 of 37,000 mt of products and 15,030 mt of N.

It is estimated that the new fertilizer pricing structure established at the Fier Plant, and the expected more stable economics of the country, will permit an increase in sales of nitrogen fertilizers of about 25% for 1993 and of a further 10% for 1994, giving total

expected sales of about 19,000 mt N for 1993 and 21,000 mt N for 1994, amounts which should be produced in these 2 years, respectively.

The expected limited natural gas availability for 1993 and 1994 of 140,000 m^3/day during the 7 warm months of each year (from April 1 through October 31) will permit the production of 41,500 mt/year of urea (at a rate of 194 mt/day) utilizing the ammonia unit of Train 2 in combination with the urea unit of Train 3. This will represent 19,090 mt N for each of the 2 years. The balance of the nitrogen production requirement for 1993 is essentially zero (19,000 - 19,090 = -90 mt N), and of about 1,910 mt N for 1994. It is expected that this shortage of fertilizer can be produced in 1994 with extra natural gas which will be available after reworking the Delvina wells, or by importing some gasoline for ammonium nitrate production for that year. This would be further analyzed later on in the year after looking at the response from the natural gas wells, and after re-evaluating the fertilizer consumption in 1993.

If everything goes as expected, the study to be made on the gas situation in Albania will be completed by August of 1993, and the actual gas production enhancement will be performed sometime during the winter of 1993/94, and early spring of 1994, including the replacement of the part of pipeline that requires improvement. By April 1994 the present limitation on natural gas supply should have been lifted, making available enough natural gas to at least meet the country's requirement of nitrogen fertilizers, and hopefully to leave a surplus so that some urea can be produced for the export market in Macedonia and elsewhere.

Actions to Be Taken

Two-Year Presence of Expert/Advisor–As stated before, it is highly recommended that all of the activities mentioned in this listing be coordinated by a well-qualified and seasoned expert in ammonia, urea, nitric acid, and ammonium nitrate production. This expert would (1) coordinate the activities set forth as recommendations from this study, (2) serve as an advisor to the Fier Plant in technical matters, (3) conduct studies to improve operating and environmental conditions and product quality, and (4) make definitive studies of the benefits to be obtained by implementing the retrofits indicated elsewhere.

Some of the studies that the team has identified as being presently needed, and which could be undertaken by this expert/advisor, are: (1) improve the quality of product from Urea 2 unit (biuret concentration is high at 2%-4% rather than less than 1%), (2) improve

shelf life of urea and ammonium nitrate produced in the complex (both materials cake easily), (3) develop and implement a complex-wide equipment testing program, (4) make a definitive determination if it is desirable at any point to run with gasoline, (5) analyze the benefits of installing computerized systems for controlling spare parts and/or other company activities, (6) work on the improvement of the telephone system to obtain access to the outside world from the Fier Plant, (7) implement a system to moth ball the ammonia unit of Train 1 if conditions determine that that unit should not operate on a regular basis, and (8) make a follow up on the natural gas situation.

The expert/advisor should remain at Fier for a period of 2 years. By the end of those 2 years most of the activities outlined in this study should have been completed. The estimated cost of retaining such an expert during 2 years is about US $400,000.

Engineering and Expediting Services – It is forseen that the expert/advisor that will remain 2 years at Fier will need much external support. The man posted at Fier for 2 years will have, until telecommunications improve in Albania, a difficult time contacting the outside world and will also need technical information on equipment and processes, materials, supplies, and help in coordinating some of the in-country work that is done simultaneously. Support will also have to be provided from Headquarters in the United States to expedite actions to be taken to make the project flow easier. It is recommended that one or two of the IFDC team that worked on this study become involved as expeditors/engineering specialists to aid the man posted at Fier. It is estimated that the expeditor(s) will travel to Albania about four times a year and remain in Albania for a period of about a month on each visit. In addition to the functions mentioned above, during the visit the expeditor(s) will review the project status, audit expenditures for the project, and prepare a status report on the project. A total of US $150,000 for 2 years have been allocated for this purpose.

Natural Gas Situation – The most important activity to be taken if the Fier Plant is to be kept in operation is to increase the natural gas availability to this complex. As stated above, further engineering review of the Delvina gas wells in southern Albania is warranted as the Delvina 12 well has held a high bottom-hole pressure for 4-5 years and a recent Halliburton study of the well indicated that a hydraulic fracture could possibly increase the flow from a present 30,000 m^3/day to over 100,000 m^3/day.

Review of these data with the Managing Director of Chevron Overseas (Albania) Limited resulted in an agreement by Chevron to furnish an engineering team under contract to IFDC, and subject to approval by USAID, to study the Delvina wells jointly with ALBPETROL and report on their findings. This will include a review of the Halliburton report on the wells. Copies of the Halliburton report and the Chevron commitment to perform a study are included in Appendices C and I, respectively. The Chevron field study would be performed by a team of three experts, and would include:

1. Delvina reserves assessment.
2. Review of Halliburton study and recommendations.
3. Field simulation work if sufficient data are available.
4. Independent assessment of pipeline condition.
5. Capability of Albanian enterprises to replace sections of the pipeline and to provide services to Halliburton for the acid fracturing work.

The cost of the study would be US $80,000 including all administration and coordination activities. Assuming that the report is positive in its findings and recommends the acid fracture work at the Delvina wells, it is estimated that this work would have a cost of about US $750,000 according to Halliburton's study and including administration and coordinating activities. This amount, which includes the work on two wells with the possible replacement of piping in one well, may change depending on the findings of the study mentioned above.

In addition, the 87-km natural gas pipeline from Delvina to the Ballsh refinery and on to the Fier Plant is badly corroded, and it was reported by ALBPETROL personnel that about 20 km of the pipeline needs replacing to allow for sufficient pressure to transport the natural gas from Delvina to Fier. Based on pipeline construction information from companies in the United States, an estimated cost of US $1,750,000 would be required to replace the 20 km of pipe. It may be necessary to lay the new stretches of pipeline above ground totally at first, to expedite the operation and start getting the benefit of the increased gas supply as soon as possible. If needed, the pipeline can be buried later.

A total expenditure for solving the natural gas limitation problem appears to be US $2,580,000, which is probably the most important action to be taken and which requires immediate attention. The Fier Plant cannot operate without natural gas, and the Delvina well solution provides what is considered to be the best prospect for an immediate increase

in natural gas supply and a supply which the Albanian Minister of Industry, Natural Resources and Energy stated would be dedicated to the Fier Plant. The companies that would participate in the work on this well are experienced and well respected U.S. corporations.

Major Equipment Expenditures–From the list of major repairs to the equipment items given above, it is recommended to leave out the ones that would be required only to bring the ammonia unit of Train 1 back into continuous operation. The following projects should be undertaken:

	US $
Repair of air compressor turbine in AN unit	175,000
Replace motors on carbamate and ammonia pumps in Trains 2 and 3	160,000
Install pH control on ammonium nitrate neutralizer	15,000
Install metering system for passivation air to urea reactor	10,000
Replace bricks in reformer furnace of ammonia unit of Train 2	75,000
	435,000

Spare Parts–Some of the spare parts included in the lists are for the ammonia unit of Train 1, which is not necessary to keep in an operative condition. It is recommended that only parts for Trains 2 and 3, as well as for the nitric acid and ammonium nitrate of Train 1 be purchased. As indicated above, the funds needed for this are:

	US $
Nitric acid/ammonium nitrate units of Train 1	878,000
Train 2	159,000
Train 3	247,430
General use	715,570
	2,000,000

It is recommended that the Fier Plant itself purchase the needed spare parts because constant and intensive input from the maintenance department will be required in this operation. It is recommended that the technical expert to be stationed in an advisory

capacity at the Fier Plant be required to approve purchases and disbursements from the spare parts funds, representing the interests of USAID. This money would probably be commited in a lapse of about 6 months.

Environmental and Safety–The funds estimated above for the improvement of the environmental and safety aspects of the Fier Plant should be provided in their entirety. Those funds, as shown below, do not include the cost of erection at the plant site. The erection cost, however, should be borne directly by the Fier Plant by performing all domestic construction and erection with its own personnel.

Holding Ponds	1,800,000
Nitric Acid Fume Abater	700,000
Ammonium Nitrate Unit Air Scrubbing	1,000,000
Urea Units Air Scrubbing	2,200,000
Catalytic Converter For Hydrogen Removal	300,000
Total Environmental	6,000,000

This activity would be performed in a 2 year lapse of time, and should be coordinated by the the technical expert to be stationed in an advisory capacity at the Fier Plant in association with Fier Plant personnel.

Retrofits for Plant Modernization and Energy Savings–The estimated cost of retrofits to modernize the plants and improve efficiency is US $4,500,000. However, the retrofits should only be undertaken after detailed studies indicate that there will be a favorable economic return in performing these activities. The economic returns on the selected retrofits should be sufficient to justify loans for implementation.

Company Structure–It is not recommended to change the company structure at this time. As personnel costs increase, the company will have to trim down its personnel. At this time, the training programs recommended should be undertaken with the following costs:

	US $
Process economics, management, and privatization	30,000
Technical aspects of fertilizer production	35,000
Quality control and chemical analysis	60,000
	125,000

Total Cost

The total cost required for the total restoration of the Fier Plant is US $19 million as indicated in **Table 14**. However, the study indicates that only Trains 2 and 3 should be restored, and that the funds required for this amount to US $15.5 million as indicated in **Table 15**. This amount should be invested as follows:

	'000 US $
Funds required to begin restoration project:	
Engineering management and support services	550,000
Verification of recommendations for Delvina gas well treatments	80,000
Spare parts	1,122,000
Laboratory equipment	80,000
Major repair projects	10,000
Training programs	125,000
Subtotal	1,967,000
Funds required within 3 months after initiating project:	
Acid fracture work on Delvina gas well	750,000
Natural gas pipeline repair/replacement	1,750,000
Catalysts/other supplies	560,000
Major repair projects	155,000
Subtotal	3,215,000
Items for which commercial loans could be obtained:	
Bagged product warehouse	1,500,000
Environmental and safety projects	4,310,000
Energy retrofits	4,500,000
Subtotal	10,310,000
Grand Total	15,492,000

12. Conclusions

Based on the study performed, it can be concluded that the Fier Plant can be brought back to a sustained and economically effective operation, and therefore it is recommended that funds be provided to bring it into full operation except for Train 1 which should be

further studied before upgrading. With the investment mentioned in the report the complex can operate in a more sustainable and environmentally sound way.

It is worth mentioning that the Albanian personnel have operated this complex for many years in adverse conditions. They should be commended for their knowledge, tenacity, organization, and discipline. By providing the necessary resources and training to the Fier Plant staff they will be ready to bring the different units to successful operation.

As mentioned before, the production of nitrogen fertilizers requires natural gas or other feedstock as a source of fuel and as raw material and energy source. It is obvious that without feedstock these plants cannot operate. The most important action that needs to be taken is to secure a constant supply of gas. The best alternative is to study the possibility of reworking the Delvina wells. If such study results are positive, meaning that the wells can produce at least threefold or more the amount of gas that they are presently producing, funds should be invested to rework at least one of the wells. Together with this action, the pipeline that transfers the natural gas from the Delvina wells to the Fier Plant needs to be partially repaired or replaced.

From the analysis of the data obtained at the Fier Plant it can be concluded that the cash cost of producing urea (about US $75/mt) using natural gas as feedstock priced at 5,500 lek/1,000 m^3 is within the range of international prices, considering the initial capital investment as a sunk cost. If the natural gas price increases in Albania to international price levels, the cash cost of producing urea (about US $90/mt) will still leave a margin for profit. The use of natural gas as a feedstock is a profitable mode of operation for the Fier Plant.

Funds should be allocated in order of priority as follows: solve the natural gas limitation, procure spare parts, obtain general supplies, and repair/modify key equipment of Trains 2 and 3 to increase operability of the complex and reduce pollution.

Training should be provided to selected staff members of the Fier Plant to update them in new technologies, economics, marketing, and in quality control. The training programs will help them become more familiar with the topics treated and to integrate the Fier Plant in a faster way into the new free market economy and political system that Albania is adopting.

Table 1. Production Cash Cost of Ammonia at Full Capacity, Assuming a Natural Gas Price of 5,500 Leks/1,000 m^3, and a Gasoline Price of 17.75 Leks/L

Basis: Producing Train Feedstock	1 Natural Gas	1 Gasoline	2 Natural Gas	3 Natural Gas
	----------(US $/mt)----------			
Variable Costs:				
Raw Materials	47.70	205.51	54.00	52.50
Utilities	39.33	37.48	32.25	29.60
Chemicals and Catalysts	0.70	0.76	2.62	2.62
Subtotal Variable Costs	87.72	243.75	88.87	84.72
Fixed Costs:				
Salaries & Overhead	0.40	2.78	0.10	0.10
Other Fixed Expenses	3.33	35.39	0.29	0.29
Subtotal Fixed Costs	3.73	38.17	0.39	0.39
Maintenance:	7.00	7.00	5.00	5.00
Production Cash Cost	**98.46**	**288.92**	**94.26**	**90.10**

Note: Totals may not add due to rounding.

Table 2. Production Cash Cost of Ammonia at Full Capacity, Assuming a Natural Gas Price of 8,000 Leks/1,000 m^3, and a Gasoline Price of 24.00 Leks/L

Basis: Producing Train Feedstock	1 Natural Gas	1 Gasoline	2 Natural Gas	3 Natural Gas
	----------(US $/mt)----------			
Variable Costs:				
Raw Materials	69.38	277.87	78.55	76.36
Utilities	39.33	37.48	32.25	29.60
Chemicals and Catalysts	0.70	0.76	2.62	2.62
Subtotal Variable Costs	109.41	316.11	113.42	108.58
Fixed Costs:				
Salaries & Overhead	0.40	2.78	0.10	0.10
Other Fixed Expenses	3.33	35.39	0.29	0.29
Subtotal Fixed Costs	3.73	38.17	0.39	0.39
Maintenance:	7.00	7.00	5.00	5.00
Production Cash Cost	**120.14**	**361.29**	**118.81**	**113.97**

Note: Totals may not add due to rounding.

Table 3. Production Cash Cost of Ammonia in Train 1, at Half Capacity, Assuming Two Price Levels for Natural Gas and Gasoline

Basis:				
Natural Gas (Leks/1,000 m^3)	5,500	8,000	-	-
Gasoline (Leks/L)	-	-	24.00	17.75
	----------(US $/mt)----------			
Variable Costs:				
Raw Materials	51.93	75.53	277.87	205.51
Utilities	50.35	50.35	75.72	75.72
Chemicals and Catalysts	1.08	1.08	3.91	3.91
Subtotal Variable Costs	103.36	126.96	357.51	285.15
Fixed Costs:				
Salaries & Overhead	0.40	0.40	2.78	2.78
Other Fixed Expenses	3.33	3.33	35.39	35.39
Subtotal Fixed Costs	3.73	3.73	38.17	38.17
Maintenance:	7.00	7.00	7.00	7.00
Production Cash Cost	**114.09**	**137.69**	**402.68**	**330.32**

Note: Totals may not add due to rounding.

Table 4. Production Cash Cost of Urea at Full Capacity, Assuming Natural Gas Prices of 5,500 and 8,000 Leks/1,000 m^3

Basis:					
Producing Train	Urea 1	Urea 1	Urea 2	Urea 2	Urea 1 or 2
Natural Gas (Leks/1,000 m^3)	5,500	8,000	5,500	8,000	-
Gasoline (Leks/L)	-	-	-	-	17.75
	----------(US $/mt)----------				
Variable Costs:					
Raw Materials	56.93	71.76	54.42	68.84	174.51
Utilities	16.38	16.38	16.38	16.38	16.38
Chemicals and Catalysts	0.48	0.48	0.48	0.48	0.48
Subtotal Variable Costs	73.80	88.62	71.28	85.70	191.37
Fixed Costs:					
Salaries & Overhead	0.06	0.06	0.06	0.06	0.06
Other Fixed Expenses	0.08	0.08	0.08	0.08	0.08
Subtotal Fixed Costs	0.14	0.14	0.14	0.14	0.14
Maintenance:	3.00	3.00	3.00	3.00	3.00
Production Cash Cost	**76.94**	**91.76**	**74.43**	**88.84**	**194.51**

Note: Totals may not add due to rounding.

Table 5. Production Cash Cost of Nitric Acid at Full Capacity, Assuming a Natural Gas Price of 5,500 Leks/1,000 m^3, and a Gasoline Price of 17.75 Leks/L

Basis: Train Producing Ammonia Feedstock for Ammonia	1 Natural Gas	1 Gasoline	2 Natural Gas	3 Natural Gas
	----------(US $/mt)----------			
Variable Costs:				
Raw Materials	29.34	86.10	28.09	26.85
Utilities	2.06	2.06	2.06	2.06
Chemicals and Catalysts	0.69	0.69	0.69	0.69
Subtotal Variable Costs	32.09	88.85	30.84	29.60
Fixed Costs:				
Salaries & Overhead	0.02	0.02	0.02	0.02
Other Fixed Expenses	0.03	0.03	0.24	0.03
Subtotal Fixed Costs	0.04	0.04	0.25	0.04
Maintenance:	4.00	4.00	4.00	4.00
Production Cash Cost	**36.14**	**92.90**	**35.10**	**33.65**

Note: Totals may not add due to rounding.

Table 6. Production Cash Cost of Ammonium Nitrate at Full Capacity, Assuming a Natural Gas Price of 5,500 Leks/1,000 m^3, and a Gasoline Price of 17.75 Leks/L

Basis: Train Producing Ammonia Feedstock for Ammonia	1 Natural Gas	1 Gasoline	2 Natural Gas	3 Natural Gas
	----------(US $/mt)----------			
Variable Costs:				
Raw Materials	50.08	136.69	48.34	46.28
Utilities	5.86	5.86	5.86	5.86
Chemicals and Catalysts	0.11	0.11	0.11	0.11
Subtotal Variable Costs	56.05	142.66	54.30	52.25
Fixed Costs:				
Salaries & Overhead	0.05	0.05	0.05	0.05
Other Fixed Expenses	0.03	0.03	0.03	0.03
Subtotal Fixed Costs	0.08	0.08	0.08	0.08
Maintenance:	3.00	3.00	3.00	3.00
Production Cash Cost	**59.12**	**145.74**	**57.38**	**55.33**

Note: Totals may not add due to rounding.

Table 7. Nutrient-Basis Production Cash Cost for Different Fier Products

Product	Ammonium Nitrate	Ammonium Nitrate	Ammonium Nitrate	Ammonium Nitrate	Urea 1	Urea 2
Concentration % N	33.5	33.5	33.5	33.5	46.0	46.0
N Gas (Leks/1,000 m^3)	5,500	-	5,500	5,500	5,500	5,500
Gasoline (Leks/L)	-	17.75	-	-	-	-
Ammonia Train	1	1	2	3	2	3
	(US $/mt nutrient)					
Nutrient Basis:						
Raw Materials	149.49	408.04	144.29	138.15	123.77	118.31
Utilities	17.50	17.50	17.50	17.50	35.62	35.62
Chemicals	0.31	0.31	0.31	0.31	1.04	1.04
Fixed Costs	0.23	0.23	0.23	0.23	0.31	0.31
Maintenance	8.96	8.96	8.96	8.96	6.52	6.52
Production Cash Cost	**176.49**	**435.04**	**171.28**	**165.15**	**167.26**	**161.80**

Note: Totals may not add due to rounding.

Table 8. Platinum Catalyst Inventory of the Fier Plant

Quantity	Item	Total Weight	Content[a]		Available Weight	
			Pt[b]	Rh[b]	Pt	Rh
		(kg)	- - -(%) - -		- - - - -(Troy oz.) - - - -	
Available:						
-	Dust	29.000	25	3	233.09	25.90
12	Gauzes in warehouse	22.200	60	7	428.24	47.58
6	Gauzes in Italy	± 7.000	60	7	135.03	15.00
7	Gauzes in converter	12.000	60	7	231.48	25.72
					1,027.85	114.21
Required:						
	Installed gauzes	15.000	90	10	434.03	48.23
	In warehouse	15.000	90	10	434.03	48.23
	Being processed abroad	15.000	90	10	434.03	48.23
To be procured		9.478	90	10	274.24	30.47

a. Assumed concentration.
b. Pt = platinum, Rh = rhodium.

Table 9. Materials Included in a Shipment of Catalysts Provided by GTZ (Germany) to the Fier Factory on a 10-Year Loan With No Interest for 3 Years

Material	Amount	Unit Price	Total Cost	Producer
		(DM)	(DM)	
Monoethanolamine	5 mt	2,250.00	11,250.00	Otto Aldag
BASF Catalyst G1-12	2,000 kg	20.37	40,740.00	BASF
Amino acetic acid	7 mt	11,750.00	82,250.00	Otto Aldag
BASF Catalyst G1-26	8,050 kg	18.72	150,696.00	BASF
BASF Catalyst G1-25	10,050 kg	21.17	212,758.50	BASF
			497,694.50	

Table 10. Allocation of Personnel for Train 1 According to Government Planning

Name of Unit	Total Number	From Which:		Remarks
		Workers	Administrative Personnel	
NH_3 Line No. 1	69	66	3	
Units 200, 313, 804	48	46	2	$CaCO_3$ units
Units 314 (loading)	34	33	1	
Unit 172 (compressors)	43	42	1	
Unit 441 (water, cir. sys.)	14	13	1	
Laboratory	14	13	1	
Facility units				
Mechanical workshop	39	37	2	
Air instrumentation	24	23	1	
Electrical workshop	30	29	1	
Social service building	30	29	1	
Total	345	331	14	

Table 11. Allocation of Personnel for Train 2 According to Government Planning

Name of Unit	Total Number	From Which:		Remarks
		Workers	Administrative Personnel	
NH_3 Line No. 2	50	46	4	
Urea No. 1	39	37	2	
Loading unit, 839	36	35	1	
Unit 441 (water, circ. system)	14	13	1	
Unit 667, 836 (compressors)	48	46	2	
Laboratory	17	16	1	
Facility units				
Mechanical workshop	28	26	2	
Air instrumentation	20	19	1	
Electrical workshop	26	25	1	
Social service building	15	15	-	
Total	**293**	**278**	**15**	

Table 12. Allocation of Personnel for Train 3 According to Government Planning

Name of Unit	Total Number	From Which:		Remarks
		Workers	Administrative Personnel	
NH_3 Line No. 3	59	54	5	
Urea No. 2	40	37	3	
Loading unit, 839	48	45	3	
Units 667, 836 (compressors)	47	45	2	
Unit 441 (water, circ. system)	27	26	1	
Laboratory	27	26	1	
Facility units				
Mechanical workshop	30	28	2	
Air instrumentation	24	23	1	
Electrical workshop	26	25	1	
Social service building	17	17	-	
Total	345	326	19	

Table 13. Actual Workforce for the Entire Plant

Name of Units	Total Number	Workers	Administrative Personnel	Salary (Lek/Month)
NH_3 Line No. 1, Plant 210	48	45	3	127,559
Unit 172/210 (compressors)	17	16	1	48,113
Control and quality brunch	6	5	1	16,756
Machine ring	49	44	5	125,134
Kitchen	12	12	-	22,038
Mechanical workshop	81	73	8	231,700
Social service building	70	65	5	179,030
Unit 200-313-804, Plant 210	46	40	6	128,380
Loading 314-839 (Plant 210, 211)	29	26	3	82,538
Unit 441 (water system) 210	11	10	1	27,132
NH_3 Line No. 2, Plant 211	49	47	2	151,808
Unit 667-836 (compressors) 211	39	37	2	101,511
Urea No. 1 and No. 2 (Plant 211, 212)	48	45	3	136,842
Loading 839, Plant 212	56	55	1	124,194
Safety group (G.A.S.H.)	17	15	2	54,115
Air instrumentation	46	43	3	134,262
Unit 441 (water system), Plant 211-212	27	25	2	83,079
NH_3 Line No. 3, Plant 212	25	21	4	69,812
Laboratory	46	44	2	118,837
667-836 unit (compressors), Plant 212	21	20	1	64,017
Transportation	22	21	1	64,734
Administrative	33	-	33	46,628
Warehouse keeper	4	-	4	11,738
Warehouse worker	6	6	-	12,987
Dispatcher	7	-	7	24,084
Small products workshops	28	27	1	74,157
Electrical workshop	57	54	3	176,197
Total	**901**	**797**	**104**	

Table 14. Funds Required for the Restructuring of the Entire Complex of the Fier Nitrogen Fertilizer Factory

	Place Where Funds Will be Used[a]				
	Train 1	Train 2	Train 3	All Trains	Total
	(US $)				
Technical Assistance:					
Two-Year Presence of Expert/Advisor				400,000	400,000
Engineering and Expediting Service				150,000	150,000
Subtotal	0	0	0	550,000	550,000
Natural Gas Situation:					
Natural Gas Situation Study of Delvina Wells				80,000	80,000
Acid Fracture Work on Delvina Well				750,000	750,000
Pipeline Re-Construction				1,750,000	1,750,000
Subtotal				2,580,000	2,580,000
Spare Parts:					
Pumps and Compressors	333,870	42,100			375,970
Bearings and Seals				9,290	9,290
Miscellaneous		4,300		366,450	370,750
Tools and Machinery				222,250	222,250
Instruments[b]	44,900	12,600	8,000		65,500
Electrical				117,580	117,580
Other[c]	499,230	100,000	239,430		838,660
Subtotal	878,000	159,000	247,430	715,570	2,000,000
Construction of Warehouse for Bagged Product				1,500,000	1,500,000
Laboratory Equipment				80,000	80,000
Catalysts and Other Supplies:					
Spare Nitric Acid Catalyst[d]	250,000				250,000
Low Temperature Shift (LTS) Catalyst Charge			300,000		300,000
Arsenic (CO_2 Removal) for Ammonia Unit of Train 1	50,000				50,000
Raschig Rings (CO_2 Removal) for Train 2		160,000			160,000
Finned Tube for Reformer Ammonia 2		100,000			100,000
Subtotal	300,000	260,000	300,000		860,000
Major Repair Projects:					
Repair of Air Compressor Turbine in AN Unit[d]	175,000				175,000
New Oxygen Compressor of NH_3 Unit in Train 1	470,000				470,000
Repair Regenerators of Air Separation Unit	25,000				25,000
Motors for Carbamate and Ammonia Pumps		40,000	40,000		80,000
pH Control of Ammonium Nitrate Neutralizer[d]	15,000				15,000
Meters for Passivation Air to Urea Reactor		5,000	5,000		10,000
Bricks for Reformer Furnace of Ammonia 2		75,000			75,000
Subtotal	685,000	120,000	45,000		850,000

(Continued)

Table 14. Funds Required for the Restructuring of the Entire Complex of the Fier Nitrogen Fertilizer Factory (Continued)

	Place Where Funds Will be Used				
	Train 1	Train 2	Train 3	All Trains	Total
	(US $)				
Environmental and Safety:					
Holding Ponds				1,800,000	1,800,000
Nitric Acid Fume Abater[d]	700,000				700,000
Ammonium Nitrate Prilling Unit Air Scrubbing[d]	1,000,000				1,000,000
Urea Units Air Scrubbing		1,100,000	1,100,000		2,200,000
Urea Units Catalytic Converter for H_2 Removal		150,000	150,000		300,000
Silencer for Ammonia 2		10,000			10,000
Subtotal	1,700,000	1,260,000	1,250,000	1,800,000	6,010,000
Training Programs:					
Economics, Management, Privatization				30,000	30,000
Technical Aspects of Fertilizer Production				35,000	35,000
Quality Control and Chemical Analysis				60,000	60,000
Subtotal				125,000	125,000
Retrofits:[e]					
Casale-Type Modification to Converters		1,500,000	1,500,000		3,000,000
Heat Recovery in the Reforming Furnaces		750,000	750,000		1,500,000
Subtotal		2,250,000	2,250,000		4,500,000
Total	**3,563,000**	**4,049,000**	**4,092,430**	**7,350,570**	**19,055,000**

a. Production units included in the different trains:
Train 1 = Ammonia, nitric acid, and ammonium nitrate
Train 2 = Ammonia and urea
Train 3 = Ammonia and urea

b. Half of the instruments required for Train 1 are assumed to be needed for the production of nitric acid and/or ammonium nitrate.

c. To cover the purchase of complete assemblies plus items not identified during the plant visit.

d. These funds will be used directly in the units for the production of nitric acid and/or ammonium nitrate.

e. These items should be undertaken after an in-depth study performed by the Expert/Advisor determines the economic benefits of performing these retrofits.

Table 15. Funds Required for the Restoration of Trains 2 and 3

	Place Where Funds Will be Used				
	Train 1	Train 2	Train 3	All Trains	Total
	(US $)				
Technical Assistance:					
Two-Year Presence of Expert/Advisor				400,000	400,000
Engineering and Expediting Service				150,000	150,000
Subtotal	0	0	0	550,000	550,000
Natural Gas Situation:					
Natural Gas Situation Study of Delvina Wells				80,000	80,000
Acid Fracture Work on Delvina Well				750,000	750,000
Pipeline Re-Construction				1,750,000	1,750,000
Subtotal				2,580,000	2,580,000
Spare Parts:					
Pumps and Compressors		42,100			42,100
Bearings and Seals				9,290	9,290
Miscellaneous		4,300		366,450	370,750
Tools and Machinery				222,250	222,250
Instruments		12,600	8,000		20,600
Electrical				117,580	117,580
Other[a]		100,000	239,430		339,430
Subtotal		159,000	247,430	715,570	1,122,000
Construction of Warehouse for Bagged Product				1,500,000	1,500,000
Laboratory Equipment				80,000	80,000
Catalysts and Other Supplies:					
Low Temperature Shift (LTS) Catalyst Charge			300,000		300,000
Raschig Rings (CO_2 Removal) for Train 2		160,000			160,000
Finned Tube for Reformer Ammonia 2		100,000			100,000
Subtotal	300,000	260,000	300,000		560,000
Major Repair Projects:					
Motors for Carbamate and Ammonia Pumps		40,000	40,000		80,000
Meters for Passivation Air to Urea Reactor		5,000	5,000		10,000
Bricks for Reformer Furnace of Ammonia 2		75,000			75,000
Subtotal		120,000	45,000		165,000

(Continued)

Table 15. Funds Required for the Restoration of Trains 2 and 3 (Continued)

	Place Where Funds Will be Used				
	Train 1	Train 2	Train 3	All Trains	Total
	(US $)				
Environmental and Safety:					
Holding Ponds				1,800,000	1,800,000
Urea Units Prilling Air Scrubbing		1,100,000	1,100,000		2,200,000
Urea Units Catalytic Converter for H_2 Removal		150,000	150,000		300,000
Silencer for Ammonia 2		10,000			10,000
Subtotal		1,260,000	1,250,000	1,800,000	4,310,000
Training Programs:					
Economics, Management, Privatization				30,000	30,000
Technical Aspects of Fertilizer Production				35,000	35,000
Quality Control and Chemical Analysis				60,000	60,000
Subtotal				125,000	125,000
Retrofits:[b]					
Casale-Type Modification to Converters		1,500,000	1,500,000		3,000,000
Heat Recovery in the Reforming Furnaces		750,000	750,000		1,500,000
Subtotal		2,250,000	2,250,000		4,500,000
Total		**4,049,000**	**4,092,430**	**7,350,570**	**15,492,000**

a. To cover the purchase of complete assemblies plus items not identified during the plant visit.
b. These items should be undertaken after an in-depth study performed by the Expert/Advisor determines the economic benefits of performing these retrofits.

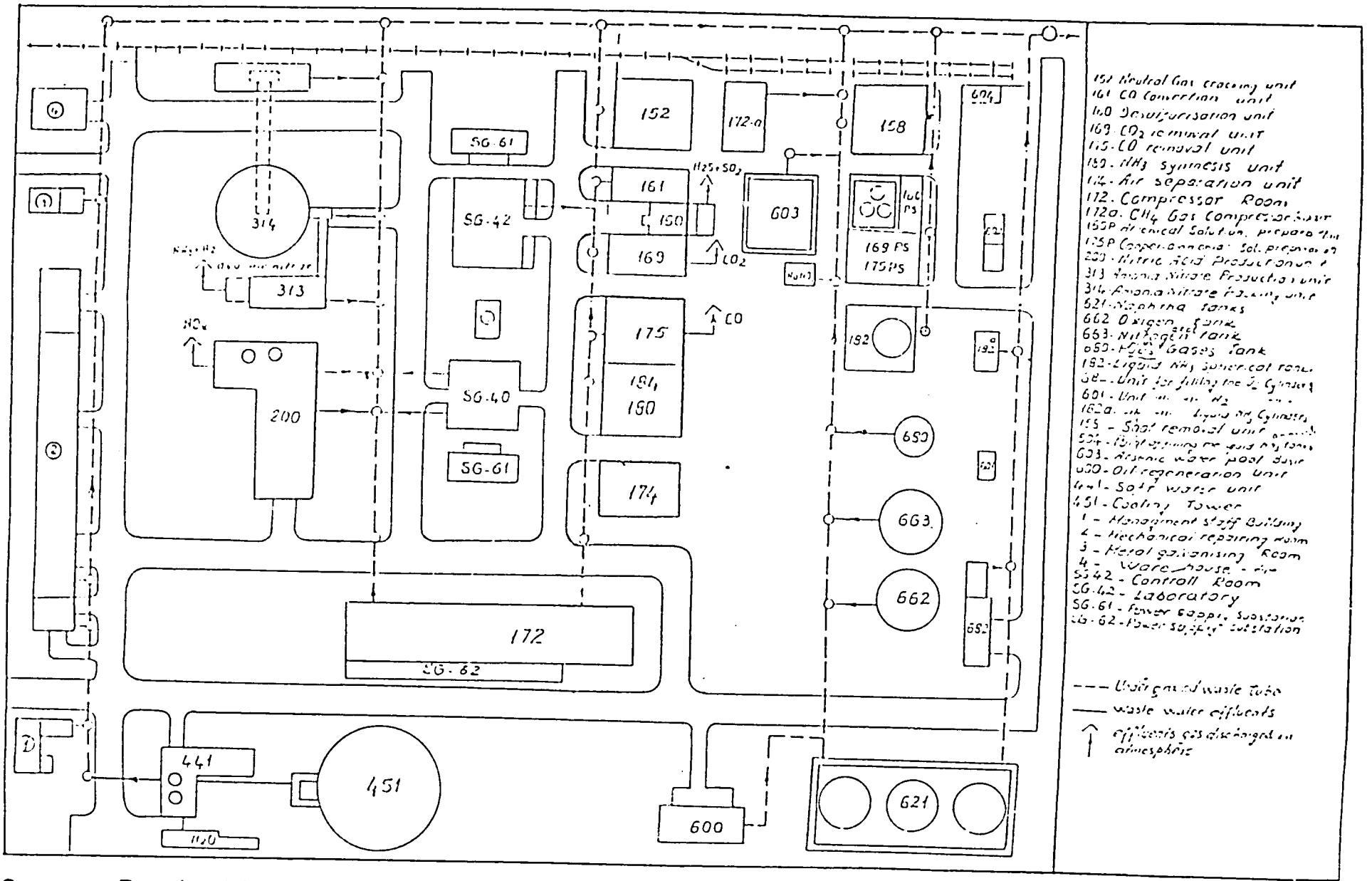

Source: Received from Uzina Plehrave Azotike Fier, Albania (Fier Plant).

Figure 1. Plant Layout—Train 1 (Referred to Also as Unit 210)

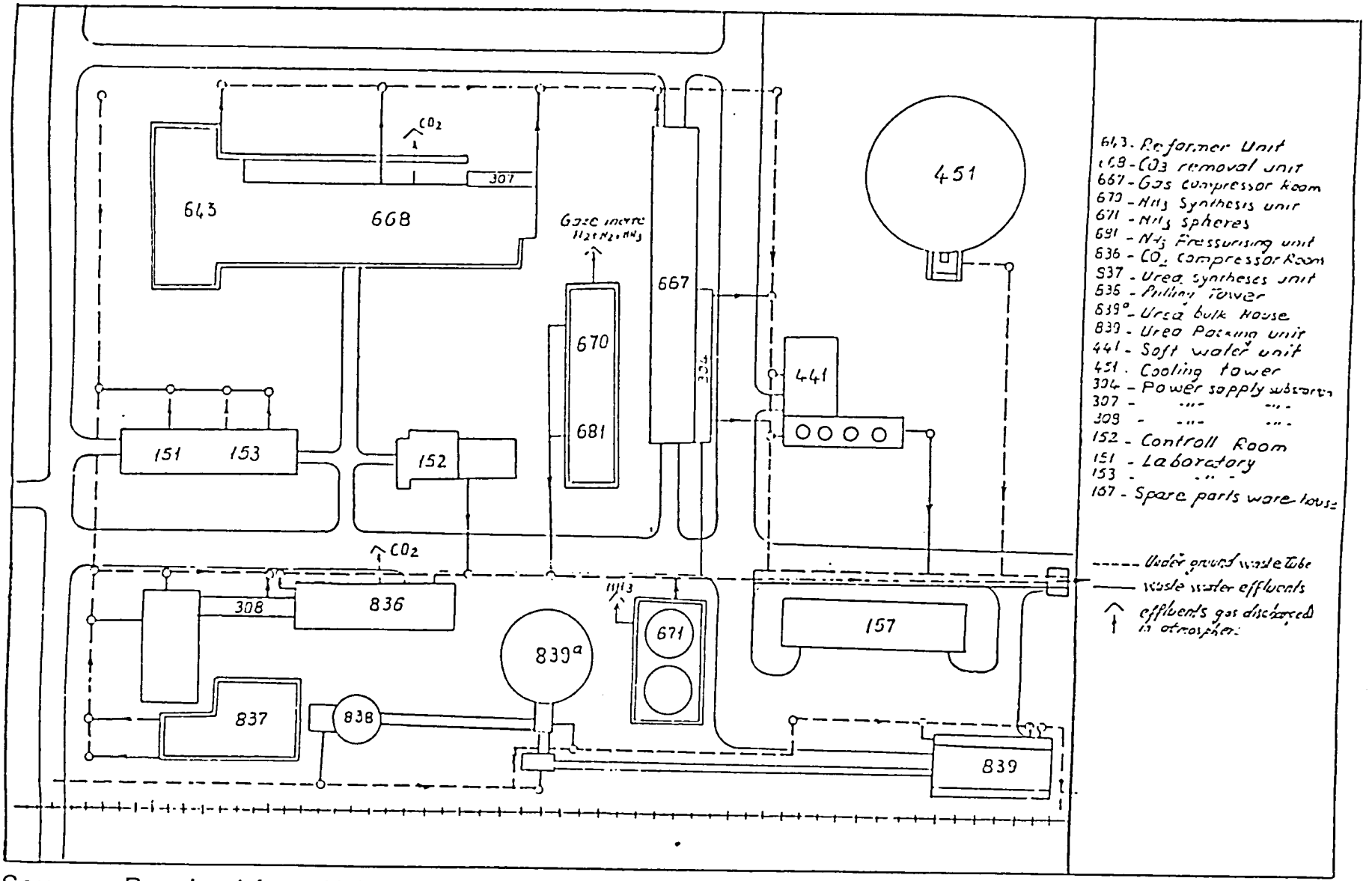

Source: Received from Uzina Plehrave Azotike Fier, Albania (Fier Plant).

Figure 2. Plant Layout—Train 2 (Referred to Also as Unit 211)

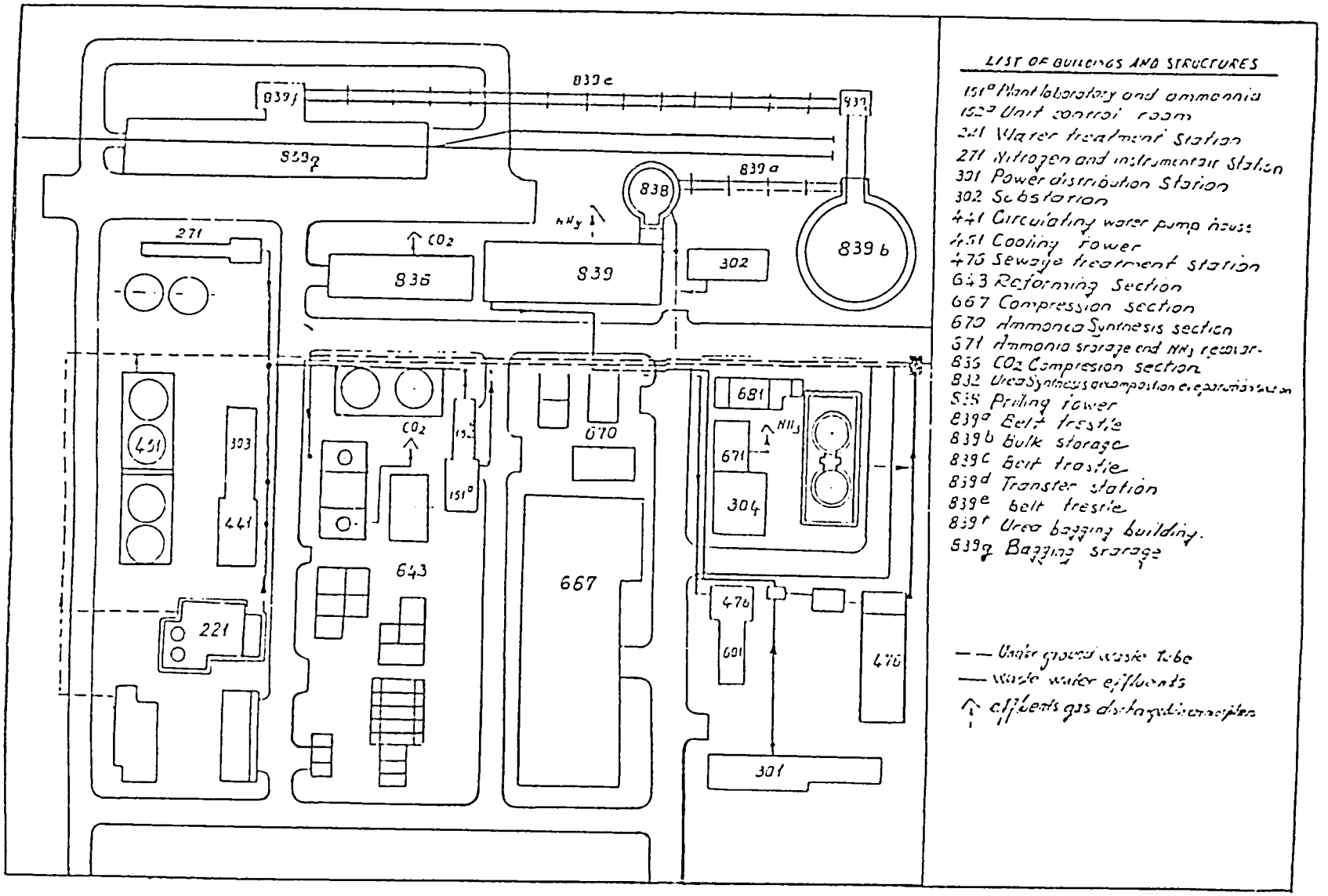

Source: Received from Uzina Plehrave Azotike Fier, Albania (Fier Plant).

Figure 3. Plant Layout—Train 3 (Referred to Also as Unit 212)

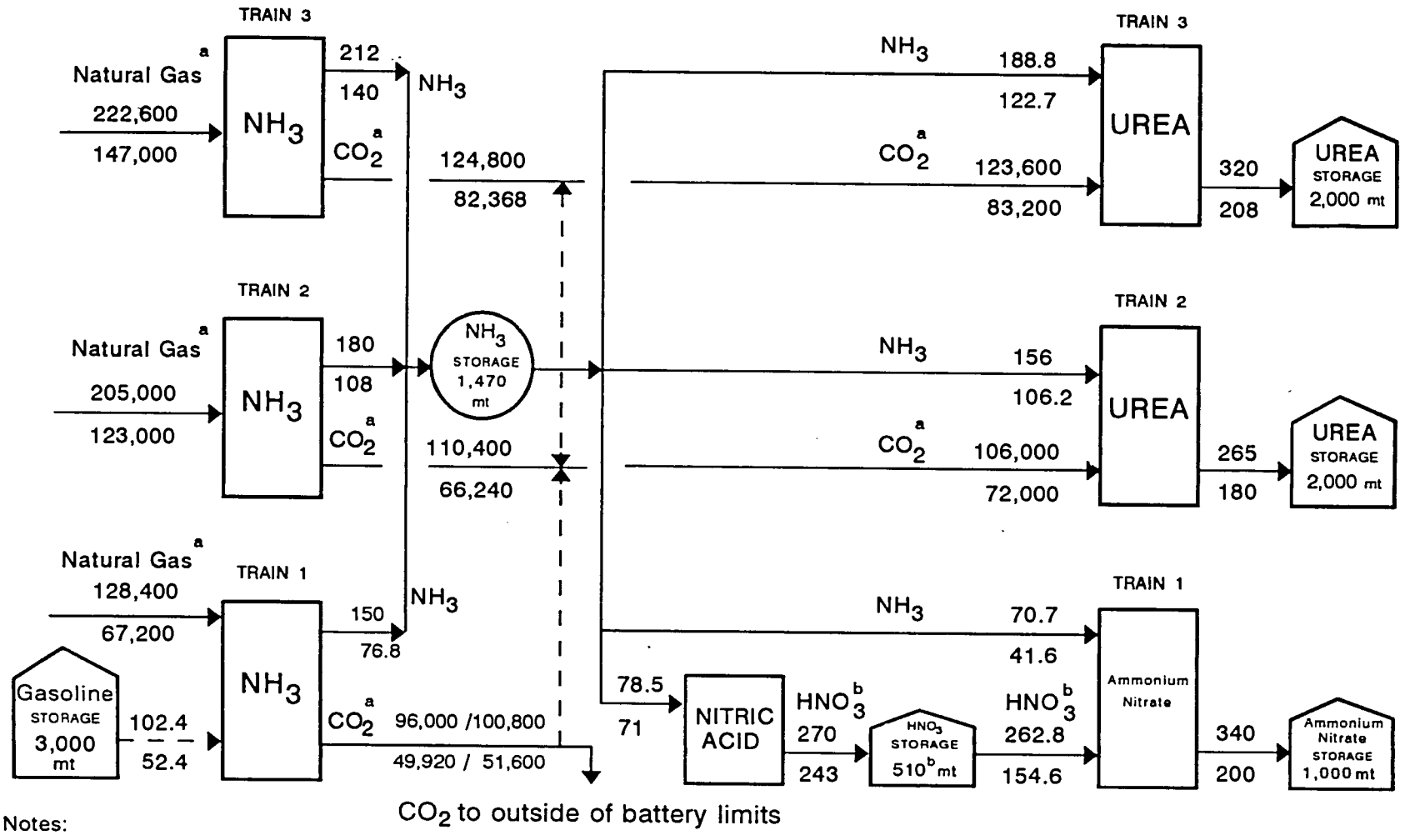

Notes:

- Numbers above lines are maximum daily capacities, while numbers below are minimum daily capacities
- Unless otherwise indicated, all figures are in metric tons of material per day.
- a: Expressed in normal cubic meters per day.
- b: Expressed as metric tons of 100% HNO3.

Figure 4. Capacities of the Different Units

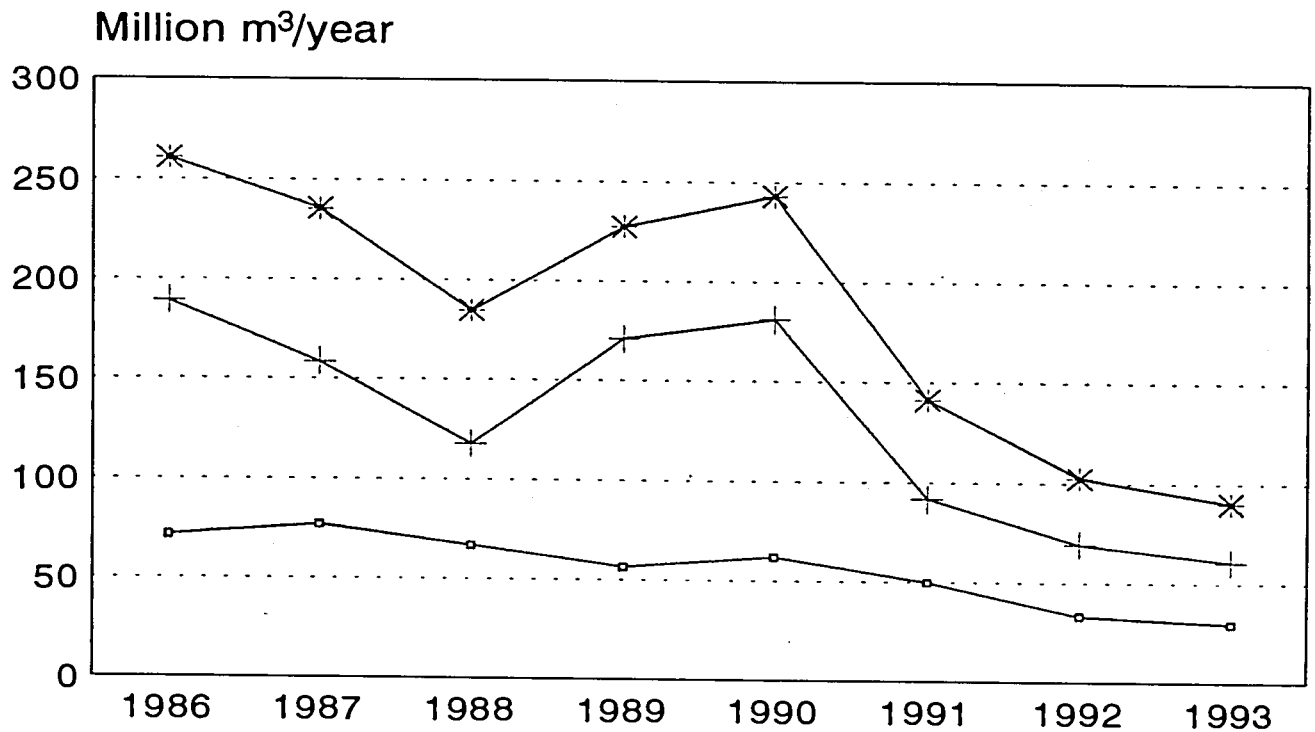

	1986	1987	1988	1989	1990	1991	1992	1993
Assoc Gas	71.7	76.95	66.9	56.4	61.8	49.73	33.25	29.5
Dry Gas	188.95	158.4	117.83	170.85	181.15	91.7	69.2	60.5
Total	260.65	235.35	184.73	227.25	242.95	141.43	102.45	90

- Source: Conversations with Management of ALBPETROL on February 18, 1993.
- Data for 1993 is projected.

Figure 5. Historical Production of Natural Gas, Albania

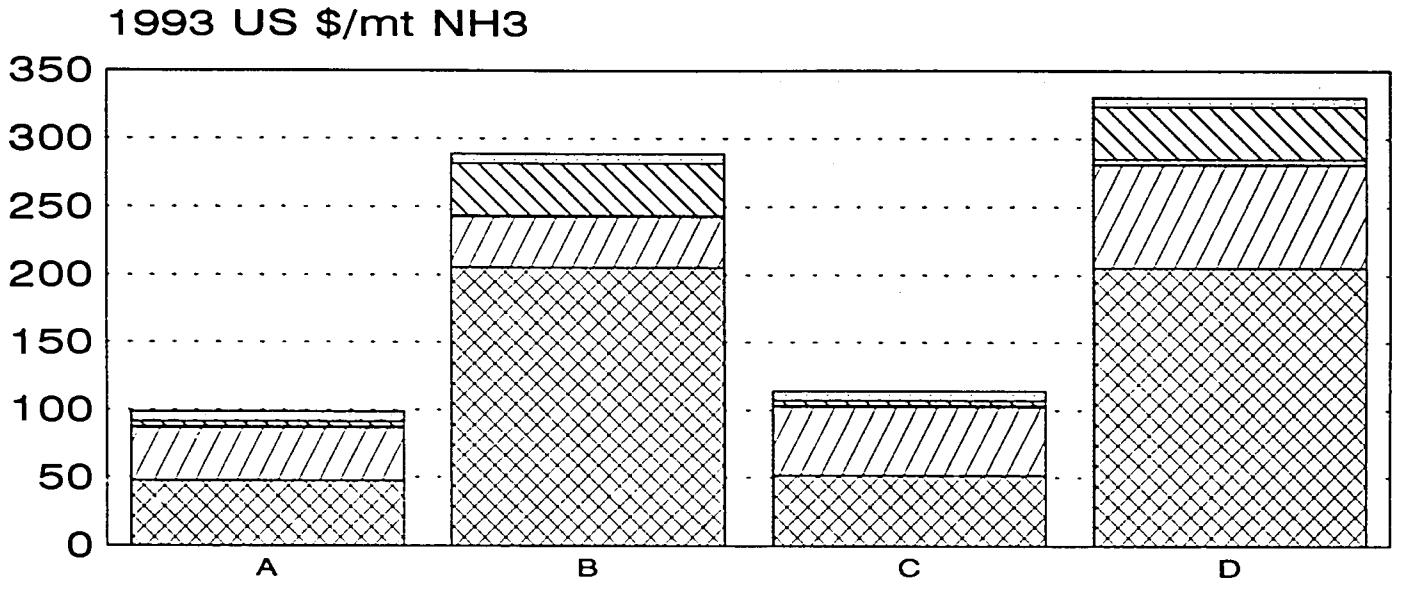

	A	B	C	D
Maint	7	7	7	7
Fxd Costs	3.73	38.17	3.73	38.17
Chemicals	0.7	0.76	1.08	3.91
Utilities	39.33	37.48	50.35	75.72
Raw Matrl	47.7	205.51	51.93	205.51

Source: Information from Uzina Plehrave Azotike Fier, Albania (Fier Plant), February 1993.

A - At 100% capacity, using natural gas at 5,500 Leks/1,000 m3
B - At 100% capacity, using gasoline at 17.75 Leks/liter
C - At 52% capacity, using natural gas at 5,500 Leks/1,000 m3
D - At 51% capacity, using gasoline at 17.75 Leks/liter

Figure 6. Cost of Producing Ammonia in Train 1 (Unit 210)

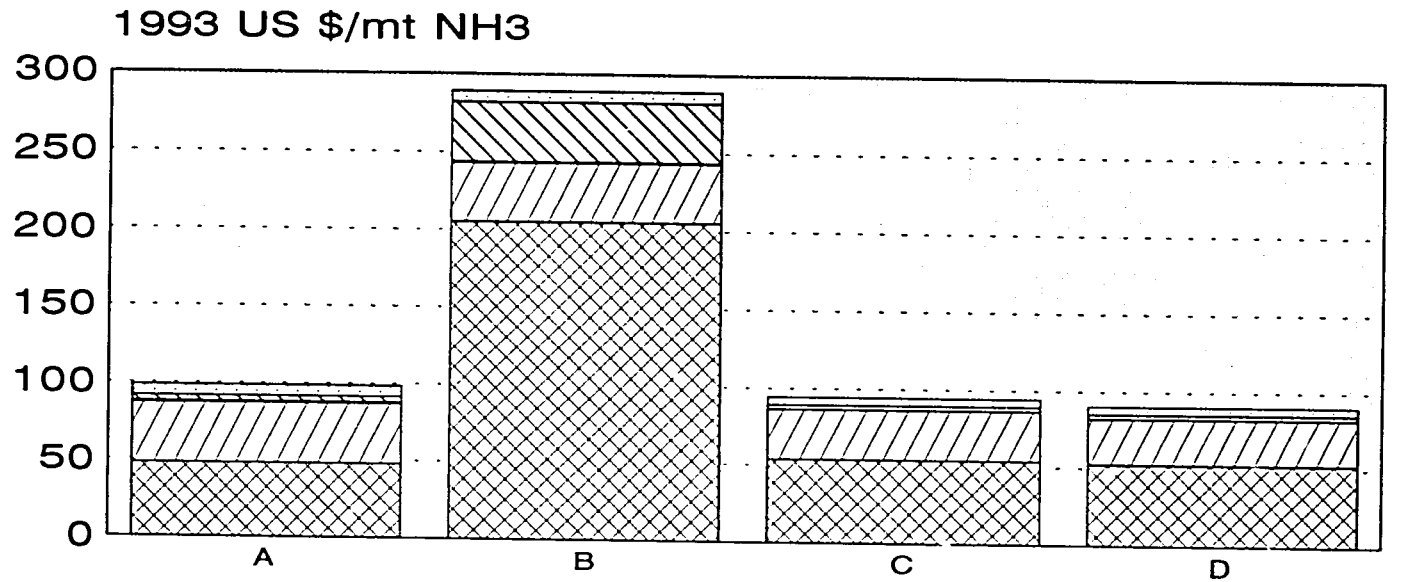

	A	B	C	D
Maint	7	7	5	5
Fxd Costs	3.73	38.17	0.39	0.39
Chemicals	0.7	0.76	2.62	2.62
Utilities	39.33	37.48	32.26	29.6
Raw Matrl	47.7	205.51	54	52.5

Source: Information from Uzina Plehrave Azotike Fier, Albania (Fier Plant), February 1993.

A - In Train 1, at full capacity, using natural gas at 5,500 Leks/1,000 m3
B - In Train 1, at full capacity, using gasoline at 17.75 Leks/liter
C - In Train 2, at full capacity, using natural gas at 5,500 Leks/1,000 m3
D - In Train 3, at full capacity, using natural gas at 5,500 Leks/1,000 m3

Figure 7. Cost of Producing Ammonia in All Units at Full Capacity

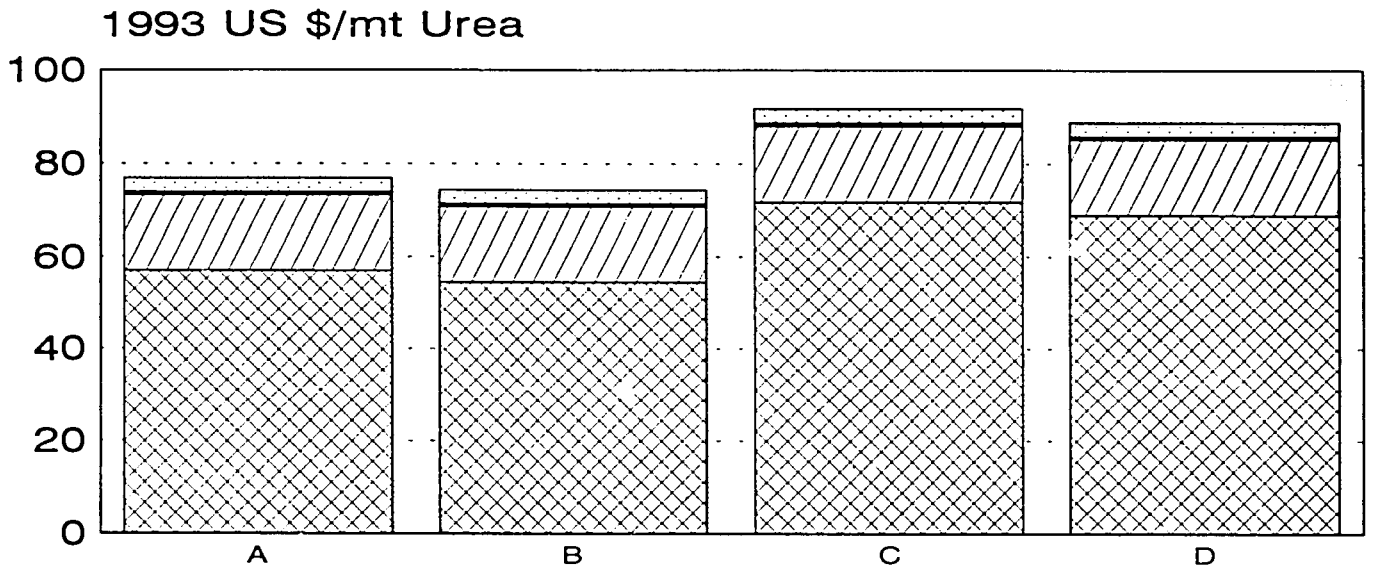

	A	B	C	D
Maint	3	3	3	3
Fxd Costs	0.14	0.14	0.14	0.14
Chemicals	0.48	0.48	0.48	0.48
Utilities	16.38	16.38	16.38	16.38
Raw Matrl	56.93	54.42	71.76	68.84

Source: Information from Uzina Plehrave Azotike Fier, Albania (Fier Plant), February 1993.

A - In Train 2, at full capacity, using natural gas at 5,500 Leks/1,000 m3

B - In Train 3, at full capacity, using natural gas at 5,500 Leks/1,000 m3

C - In Train 2, at full capacity, using natural gas at 8,000 Leks/1,000 m3

D - In Train 3, at full capacity, using natural gas at 8,000 Leks/1,000 m3

Figure 8. Cost of Producing Urea in Trains 2 and 3 at Full Capacity

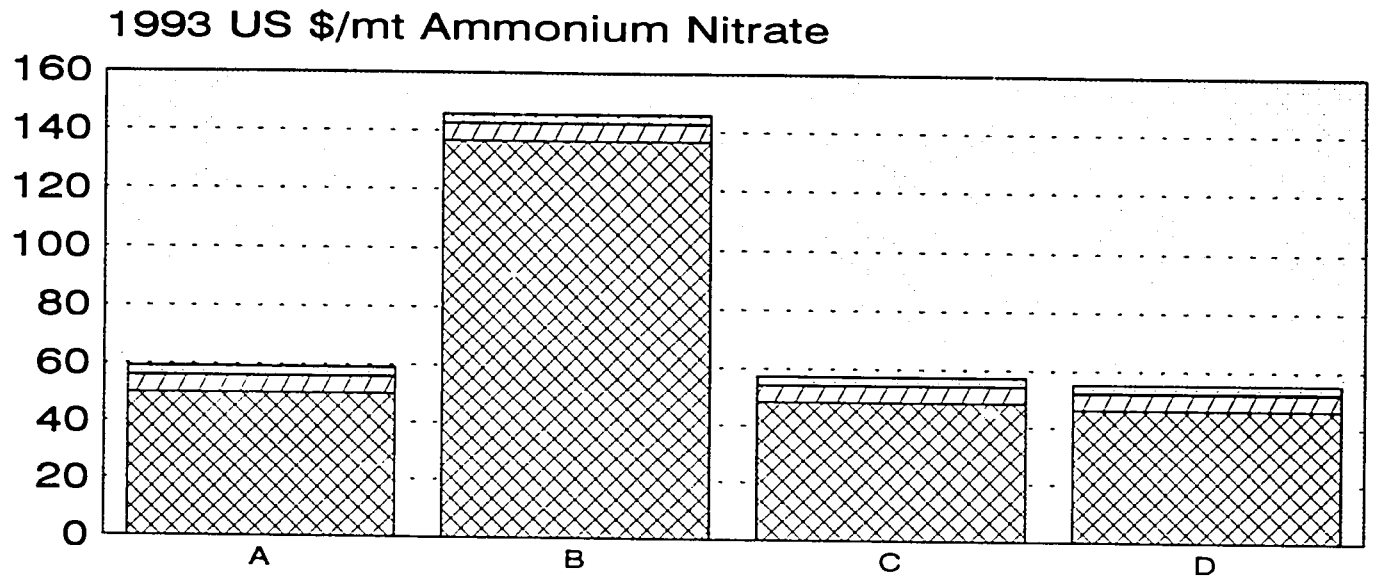

	A	B	C	D
Maint	3	3	3	3
Fxd Costs	0.08	0.08	0.08	0.08
Chemicals	0.11	0.11	0.11	0.11
Utilities	5.86	5.86	5.86	5.86
Raw Matrl	50.08	136.69	48.33	46.28

Source: Information from Uzina Plehrave Azotike Fier, Albania (Fier Plant), February 1993.

A - At full capacity, with ammonia produced in Train 1, using natural gas at 5,500 Leks/1,000 m3

B - At full capacity, with ammonia produced in Train 1, using gasoline at 17.75 Leks/liter

C - At full capacity, with ammonia produced in Train 2, using natural gas at 5,500 Leks/1,000 m3

D - At full capacity, with ammonia produced in Train 3, using natural gas at 5,500 Leks/1,000 m3

Figure 9. Cost of Producing Ammonium Nitrate

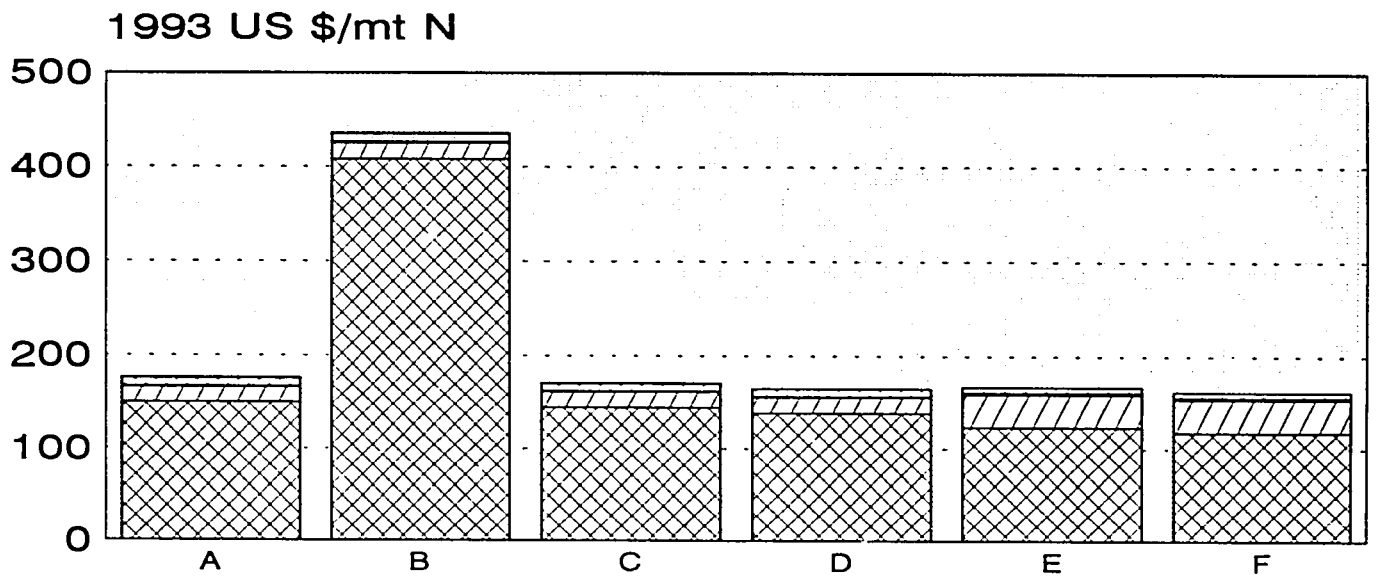

	A	B	C	D	E	F
Maint	8.96	8.96	8.96	8.96	6.52	6.52
Fxd Costs	0.23	0.23	0.23	0.23	0.31	0.31
Chemicals	0.31	0.31	0.31	0.31	1.04	1.04
Utilities	17.5	17.5	17.5	17.5	35.62	35.62
Raw Matrl	149.49	408.04	144.29	138.15	123.77	118.31

Source: Information from Uzina Plehrave Azotike Fier, Albania (Fier Plant), February 1993.

A - Ammonium nitrate, at 100%, with ammonia from Train 1, using natural gas at 5,500 Leks/1,000 m3
B - Ammonium nitrate, at 100%, with ammonia from Train 1, using gasoline at 17.75 Leks/liter
C - Ammonium nitrate, at 100%, with ammonia from Train 2, using natural gas at 5,500 Leks/1,000 m3
D - Ammonium nitrate, at 100%, with ammonia from Train 3, using natural gas at 5,500 Leks/1,000 m3
E - Urea in Train 2, at 100%, with ammonia from Train 2, using natural gas at 5,500 Leks/1,000 m3
F - Urea in Train 3, at 100%, with ammonia from Train 3, using natural gas at 5,500 Leks/1,000 m3

Figure 10. Production Cost for All Fertilizers on a Nutrient Basis

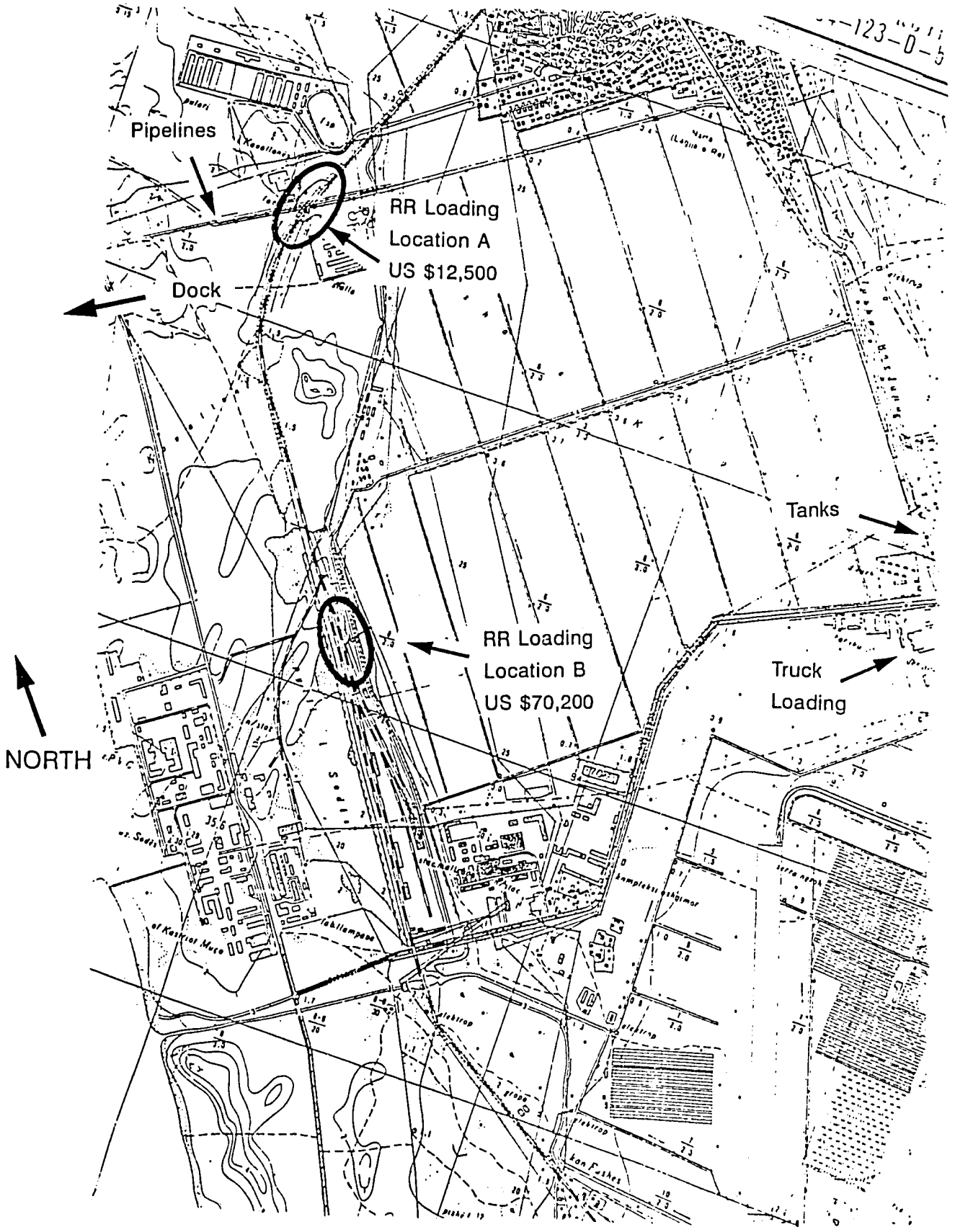

Figure 11. Liquid Cargo Port at Vlora

Appendix A

Terms of Reference

Draft for Discussion
January 8, 1993

Technical Assistance to Nitrogen Production Units in Albania

International Fertilizer Development Center
P.O. Box 2040
Muscle Shoals, Alabama

January 8, 1993

Technical Assistance to Nitrogen Production Units in Albania

Background

The changes in political and social structure in Albania have disrupted the production and use of fertilizers thus adversely affecting agricultural productivity. This disruption has had a direct and adverse effect on the nitrogen fertilizer (ammonia, urea, and ammonium nitrate) production company at Fier. In order for this company to thrive in the future, it most likely will have to undergo a restructuring of its production units to become more efficient in the use of its resources. In the case of nitrogen fertilizer production, this need is intensified by the scarcity of adequate feedstocks (primarily natural gas) for the operation of the nitrogen production units.

Scope of Work

The study covered by this project will recommend actions to rationalize the Fier nitrogen-based fertilizer production units through an improved and more efficient use of the necessary resources in more sustainable and environmentally sound ways.

The study will analyze the conditions and capacities under which the different nitrogen fertilizer production units should operate to reach the most favorable financial/economic and environmental condition, considering: (1) the investments that need to be made (for example, spare parts, pollution control equipment, and others); (2) a modified structure for the management, operations, and maintenance functions; and (3) the expected natural gas availability or the possibility of using other local or imported fuels.

The activities and output of the study team will include:

1. **Spare Parts Situation** – A list of spare parts that should be kept in storage at the plant site will be generated. This list will be prepared based on (1) an analysis of the lists of recommended spare parts provided by the manufacturers of the different equipment items, (2) a review of the operational and maintenance records at the operating plant, and (3) the expertise of the study team members.

For each major equipment part, the above-mentioned sources of information will be used to determine if the part is to be included in the list, using as criteria: (1) the criticality of the part and of the equipment it fits in; (2) its expected life in the particular application; (3) its availability in the local and foreign market; (4) the procurement time to obtain the part; (5) the number of times that the same part is used throughout the plant; and (6) the cost of the part.

In the particular case of nonconventional parts or equipment, such as Chinese-manufactured components, it is possible that not all the required information will be available for determining the necessary spare parts. In such a case, recommendations will be made regarding followup studies to be made or actions to be taken to obtain the necessary spare parts information.

2. **Other Investments to be Made** – Physical modifications to the operating units needed to improve the efficiency and operability of the units as well as to decrease their environmental impact will be analyzed and their cost estimated. It is expected that the modifications recommended in the final report for improving the efficiency and operability of the units will permit the complex to be more competitive in the domestic nitrogen fertilizer market. Likewise, it is expected that the modifications recommended in the final report for decreasing the environmental impact of the units will permit the complex to comply with Albanian and European standards. The engineering design of the recommendations, however, will not be part of this project.

3. **Modification of the Company Structure** – The present structure of the company will be analyzed, and recommendations will be made for its reorganization to achieve a structure that will be more responsive to the present day needs of the company. The recommended structure will consider the new forces and pressures acting upon the company from (1) the marketplace, (2) environmental requirements, and (3) the need to be financially and economically competitive in a free market system.

4. **Natural Gas Supply Situation** – From operating records of the natural gas producing field(s), particularly data concerning historical pressures and consumption, as well as from other national records and tests performed on the natural gas reservoirs, an attempt will be made to estimate, in a rough manner, the expected future availability of the natural gas feedstock. Recommendations will be given regarding the future

studies that should be undertaken to effectively determine the long-term availability of natural gas, including methods to increase its recovery.

5. **Cost Analysis**–The expected conversion and production costs for the nitrogen products (ammonia, urea, and ammonium nitrate) made in these units will be calculated, considering the output from activities 1 through 4 above. A sensitivity analysis will be made to determine the effect that the major cost items will have on these costs. Alternative feedstocks will be considered when appropriate.

   From these costs, a profitability analysis for the units will be made including the expected cash flow for the next 10 years, the internal rate of return (IRR), and the net present value (NPV) using several discounting rates. A sensitivity analysis will be performed to show the financial soundness (profitability) of the units with respect to variations of values for key components, including product prices, sales volume, and production costs.

In order for the study to be successfully performed, it is necessary that the following information and services be obtained from the operating complex: (1) English copies of the documentation indicated in Appendix A; (2) answers to the questions listed in Appendix B; (3) English-speaking counterparts with knowledge on financial/cost aspects, plant operations, and maintenance; and (4) free access to company records.

Reporting

The output from all the analyses performed by the study team will be presented in a single report issued at the culmination of all the activities. The report will include the results from all calculations as well as the recommendations for improving the financial/economic and environmental situations of the Fier production complex. The report will be issued in English and will use metric units. Three copies of the report will be delivered to USAID for comments and/or approval within 45 days after the team returns from the visit to Albania. USAID will be requested to make comments to the report within 45 days after its receipt. IFDC will use the comments received from USAID to finalize the report. Five copies of the finalized version of the report (in English using metric units) will be officially transmitted to USAID within 30 days after receiving the comments from USAID.

Professional Staff

In performing the above-mentioned scope of work, IFDC is free to make use of outside organizations or consultants. However, IFDC will thoroughly review any information received from an outside source before making use of it. IFDC will be the coordinator of all information, and, ultimately, the only organization responsible for performing the tasks covered by this Agreement. In all cases, the organizations or consultants used by IFDC will be of a recognized high-professional standard. The members of the team that will work directly on this project are:

Jorge R. Polo – Project Analyst, Team Leader
José R. Lazo de la Vega – Project Engineer
James W. Foster – Nitrogen Fertilizer Production Expert, Gas Specialist

Curricula vitae for the team members are given in Appendix C.

Schedule

The proposed schedule for implementing the study follows:

	Calendar Time	Actual Work Time (total of 3-person team)
Team preparation	2.0 weeks	15 workdays
In-country study	3.0 weeks	45 workdays
Travel to and from Albania	0.5 weeks	12 workdays
Post-study calculation period at IFDC Headquarters	3.0 weeks	33 workdays
Post-study report preparation at IFDC Headquarters	2.5 week	18 workdays
IFDC secretarial		10 workdays
Graphics		10 workdays
Total	11 weeks	143 workdays

Project Budget

The budget (Table 1) includes salaries and personnel benefits, communications, use of equipment, supplies and materials, in-country expenses, and administrative costs. The budget does not, however, include cost of in-country support personnel and translators that may be required to facilitate performance of the study project.

Appendix A

Documents Required

Copies of the following documents, translated into English, will be required to fully analyze the ammonia, urea, and ammonium nitrate production units:

- Operating manuals for the different operating units.
- Lists of recommended spare parts provided by the manufacturers of the different equipment.
- List of spare parts presently in storage, indicating amount and equipment to which it goes.
- Organization chart showing staffing for the different units.
- Description of the administrative organization.
- Description of the production organization.
- Description of the maintenance organization.
- Description of the marketing organization.
- Operational and maintenance records for the different operating units.

Appendix B

Information Required

The following information will be reviewed to fully analyze the ammonia, urea, and ammonium nitrate production units and determine their respective production cost:

- Historical and projected sales volumes for each product made, by area and by crop, and seasonal character of these.
- Design and attained production capacities in each operating unit.
- Frequency and amount of production losses (downtime) incurred, indicating reasons for the losses.
- Average on-stream factor for each operating unit, apart from feedstock shortages.
- Piece of equipment or machinery which is the major cause of shutdowns for each operating unit.
- Types and frequency of problems experienced with the high-pressure seals on the Chinese reciprocating high-pressure pumps.
- Frequency for catalyst changes recommended by technical and operating staff for:

  Primary reformer
  Secondary reformer
  High-temperature shift converter
  Low-temperature shift converter
  Ammonia converter
- Storage capacity available for feedstock, raw and intermediate materials, and for products.
- Consumption efficiencies of feedstock, raw and intermediate materials, and of energy and other utilities.
- Current feedstock and raw material procurement systems and their cost including f.o.b. price, freight, unloading, insurance, and other related taxes, fees and charges.
- Cost of alternative feedstocks and raw materials.
- Unit cost for electricity, steam, water, fuels, other utilities and bags.

- Amounts generated and emitted of fogs, aerosols, dusts, and entrained particles in gaseous streams (determined through actual sampling, measurement, and analysis).
- Quality and amounts of liquid effluent streams (determined through actual sampling, measurement, and analysis).
- Place where liquid effluent streams are sent.
- Place where solid wastes are sent.
- Quality of products made considering chemical and physical parameters, including particle size distribution, nutrient content, physical properties, and contaminants present (determined through actual sampling and analysis)
- Labor costs.
- Selling, distribution, administration and overhead expenses.
- Historical and projected product prices.
- Existence of any long- or short-term loans, or of any other financial burden or encumbrances on units, including amounts and payment schedules.
- Any other information which would be necessary or useful to perform the activities included in the scope of work.
- Chemical analysis of feedstock and other inputs, indicating types and amounts of impurities.
- Are spare parts for any of the pumps, turbines, and compressors available from vendors in Albania?
- Are there local vendors for the supply of gaskets, gasket material to make gaskets from vendors' vessel drawings, piping, and pipe fitting?
- Are vendor parts catalog and service manuals in the plant for all pumps, turbines, and compressors for the three plants?
- For the Chinese pumps and compressors, are spare parts available from China? From any other country? Can you tell if the machinery is cloned; and if so, can you tell from what manufacturer it is cloned so some clue might be available to know where to go to look for parts.
- Other than the installed spare machinery, are there spare parts in stores inventory for the equipment?
- At the time the plants were constructed, were the various pieces of mechanical equipment such as the pumps and compressors given a plant number to utilize in a plant spare parts catalog or parts listing?

- Does the plant have a separate plant stores system and who is it under-maintenance or operations? Are parts checked out or issued? Can anyone go into stores and get parts?
- Is the maintenance department equipped to do machining and/or fabricate parts in an emergency?
- Are spare parts still available for the #1 unit from Italy and Germany?
- For any parts that are inventoried in the stores inventory, how are records maintained – manually or by computerized inventory?
- How many different gas-producing areas are there in Albania?
- How many gas wells are producing from this or these areas?
- What is the total number of gas wells in Albania and what is the average age of the wells – how long have they been producing?
- Have any gas wells been taken out of production in the last 3 years?
- Have any of the wells been reworked since being drilled?
- Is there a routine rework program for wells that are declining in production?
- What has the average gas production been over the past 3 years? Is the production holding steady or declining?
- What has been the average well head pressure of the gas wells over the past 3 years?
- What is the average depth to which the wells are drilled – is it deep gas or shallow gas?
- Are new wells being drilled? If so, are these in the same producing area or reservoirs or in newly explored areas?
- Is the natural gas produced sweet or sour?
- How much of the gas is casing head gas?

Appendix B

Key People Met in Albania by the IFDC Team While Conducting the Study

Key People Met in Albania by the IFDC Team While Conducting the Study

Fier Plant Staff
Fier Nitrogen Fertilizer Plant
Fier

Mr. Andon Dema	Director
Mr. Jani Sila	Chief Engineer
Mr. Laudosh Goxhaj	Mechanical Engineer
Mr. Spiro Taci	NH_3 Production Technician
Mr. Llazar Zarke	Chemical Engineer (Quality Specialist)
Mr. Jani Cati	Electronics Engineer
Miss. Merita Suljoti	Marketing Manager
Mr. Petraq Xhoxhi	Chemical Engineer (Head of Production Branch)
Mrs. Elma Mullai	Chemical Engineer (Ammonia)
Mr. Mihal Prifti	Specialist (Ammonia)
Mr. Kosta Gjoni	Specialist (Urea)
Mr. Thanas Merkuri	Mechanical Engineer
Mr. Kosta Gjoka	Mechanical Engineer
Mr. Panajot Robo	Head of Mechanical Department
Mrs. Arjana Cepele	Mechanical Engineer
Mr. Ladi Goxhaj	Mechanical Engineer
Mr. Margarit Vasiu	Accounting Department
Mrs. Aida Cipo	Accounting Department

ALBPETROL and ALBPETROL I.T.N.G.

Mr. Bahri Shanaj	Executive Director
Mr. Dhimitraq Marko	Head of Production Department

Ministry of Industry, Mineral Resources and Energy
Sheshi Skenderbej 2
Tirana

Mr. Abdyl Xhaja	Minister
Mr. Bujar Nepravista	Vice Minister
Mr. Franko Krroqi	Vice Minister

Chevron Overseas (Albania) Limited
Vila 27, Grupi i Vilave
Plazh, Durres

Mr. Len W. Bzdel	Managing Director

United States Agency for International Development
American Embassy
Br. Labinoti 103
Tirana

Mrs. Dianne (Deedee) Blane	Represenative, USAID

Translators

Mr. Emil Gika	Chemical Engineer
Mr. Ylli Xhakollari	Physicist
Mr. Safa Kumbaro	Chemical Engineer

Appendix C

Halliburton Report

HALLIBURTON MANUFACTURING & SERVICES LTD.
HALLIBURTON MANUFACTURING AND SERVICES LTD
Halliburton House 3 Putney Bridge Approach Fulham London SW6 3JD
Tel: 071-371 5500 Facsimile: 071-384 4019 Telex: 263166 Registered in ENGLAND No. 611451

Mr Jorge R Polo
Senior Project Analyst
IFDC
PO Box 2040
Muscle Shoals
ALABAMA 35662
U.S.A.

15 March 1993

Dear Mr Polo

During our recent visit to Albania, Mr Len Bzdel told us that you were interested in performing some stimulation treatments on wells in the Delvine field.

We have carried out a number of studies in Albania, to find ways that we can improve the productivity of some of the wells in the existing fields in the south of Albania.

At the request of Mr Petraq Petani we have made generalised acid frac proposals for Delvine 4 and 12. I believe you may have seen these during your visit to Albania These are good outline proposals, but it would be preferable for one of our engineers to visit the Albpetrol people to finalise any plans for stimulation treatments.

One of the biggest problems for Albpetrol is raising the necessary hard currency to pay for the treatments. We very much want to be of constructive help, and will do our best to make sure that we get the best results for them, for the minimum outlay, but of course we do need to get paid. Len Bzdel indicated that you might be able to help organise World Bank, or Exim Bank financing, and if so this would enable us to proceed rapidly.

Our original proposal/.....

Our original proposal was based on the services being based from Vienna, but due to the situation in the former Yugoslavia, we would probably need to mobilise from Italy. Therefore the price estimate we have prepared may not be exactly applicable

Please let us know what you would like us to do, and we will be very happy to work with you.

Yours sincerely

N W Moran

AREA TEHCNICAL MANAGER
EUROPE/AFRICA

Albpetrol Albania

Section 1: Cover Letter
Section 2: Technical Proposal
Section 3: Treatment Discussion

104

Section 1
Cover Letter

105

20 January 1993

Albpetrol, Chemical Engineering
Technological Oil and Gas Institute
Patos
Albania

For the attention of Mr. P. Petoni.

Dear Sir

Please find enclosed our response to your request for hydraulic fracturing recommendations for wells Delvina 4 and Delvina 12.

The technical proposal attached to this letter is based on using the My-T-Acid technique to improve the productivity of above mentioned wells. Included in the technical proposals you will find a costestimate for the proposed treatments. A discount of 15% is given on the service charges.

Attached to the technical proposal you will find a treatment discussion. This section also covers the questions that were asked in your letter of Nov 23, 1992 to Mr. S.A. Sehsuvaroglu.

Halliburton appreciates this opportunity of submitting this proposal to you. We hope you find these treatment proposals acceptable to your needs. If however you require any additional Information please call at your convenience.

Yours Truly,

Klaas van Gijtenbeek
Technical Advisor
Emmen, Holland

106

Section 2
Technical Proposal

Fracturing Recommendation: Delvina 4
Fracturing Recommendation: Delvina 12

Halliburton Services appreciates the opportunity to present this proposal and looks forward to being of service to you.

Foreword

Dear Sir,

Please find attached for your consideration our treatment recommendation for wells Devina 4 and Delvina 12.

If you have any questions about this, please don't hesitate to contact us,

Yours Truly,

Klaas van Gijtenbeek

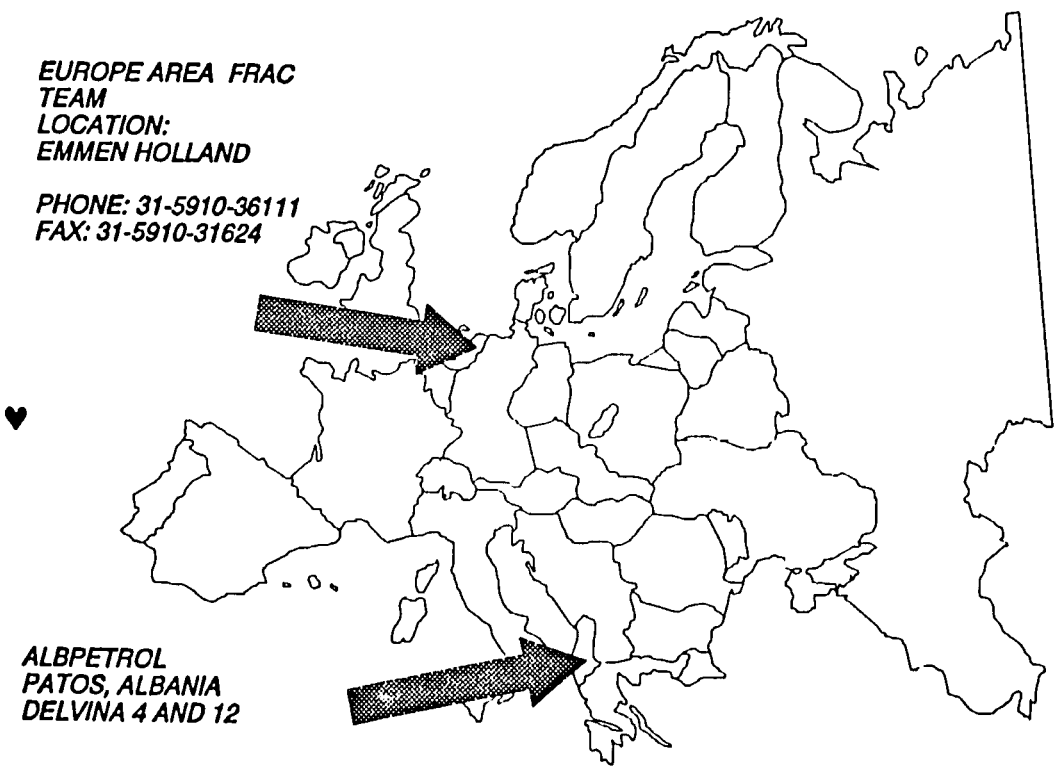

Fracturing Recommendation: Delvina 4

EAFT 481895 001193

Halliburton Services

ALBPETROL
Fax: 355-42-34031
Patos, Albania

Delvina 4

Fracturing Recommendation

Prepared for: Mr P. Petoni

1/20/93

Version
1

Prepared by:
Klaas van Gijtenbeek
Halliburton Services
Europe Area Frac Team
Karel Doormanstraat 4
7825 VT Emmen, Holland
(31) 5910-36111

Halliburton Wants
a Safer World

EAFT 48\895.000\93

113

Well Schematic

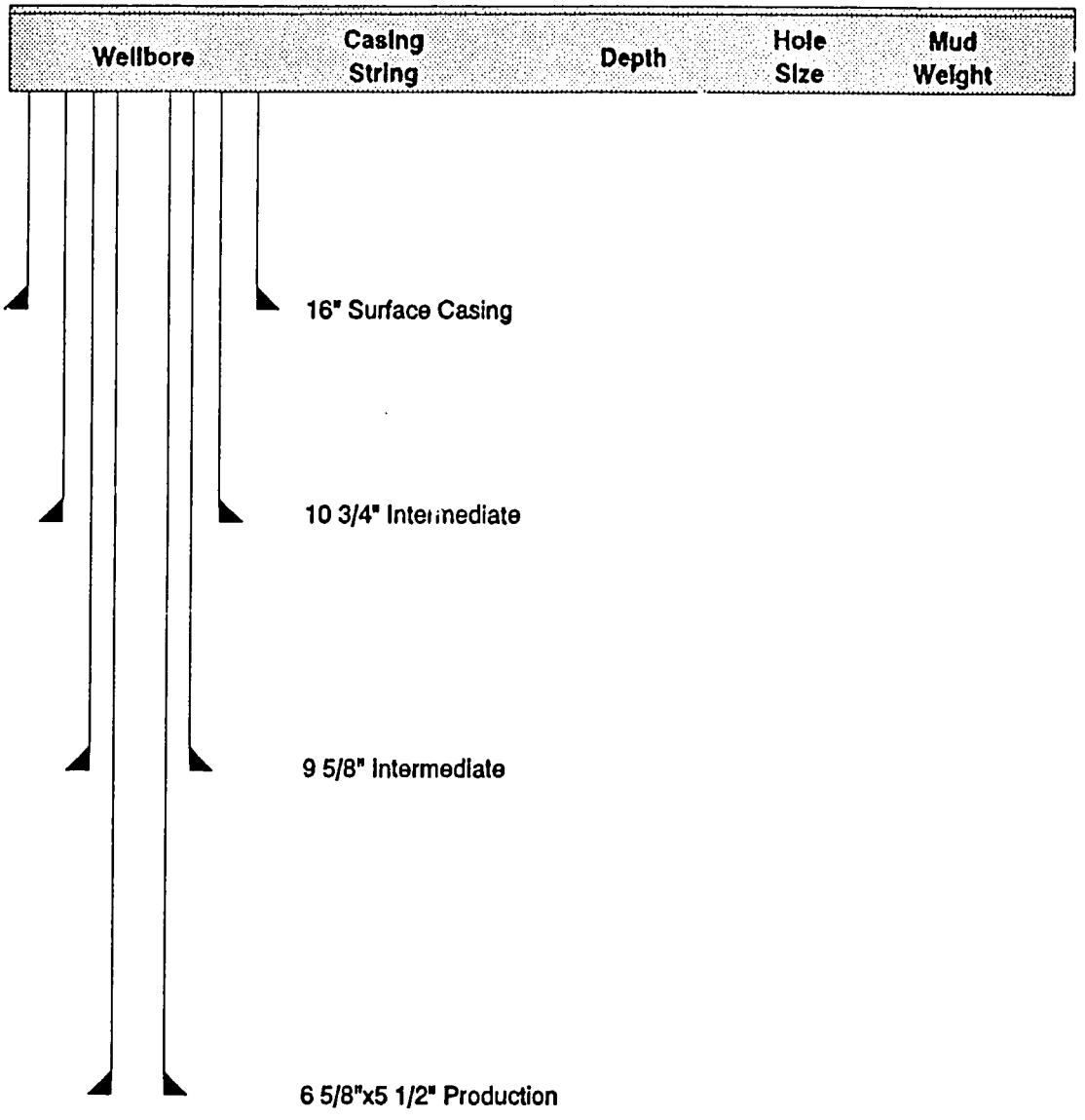

Acid Frac

Well Information

Well Depth	3800 Meter
Casing Size	6 5/8 x 5 1/2 Inch
Permeability	0.1 mD
Porosity	3 to 5 %
Bottom Hole Static Temp.	35 deg C.
Well Name	Delvina 4

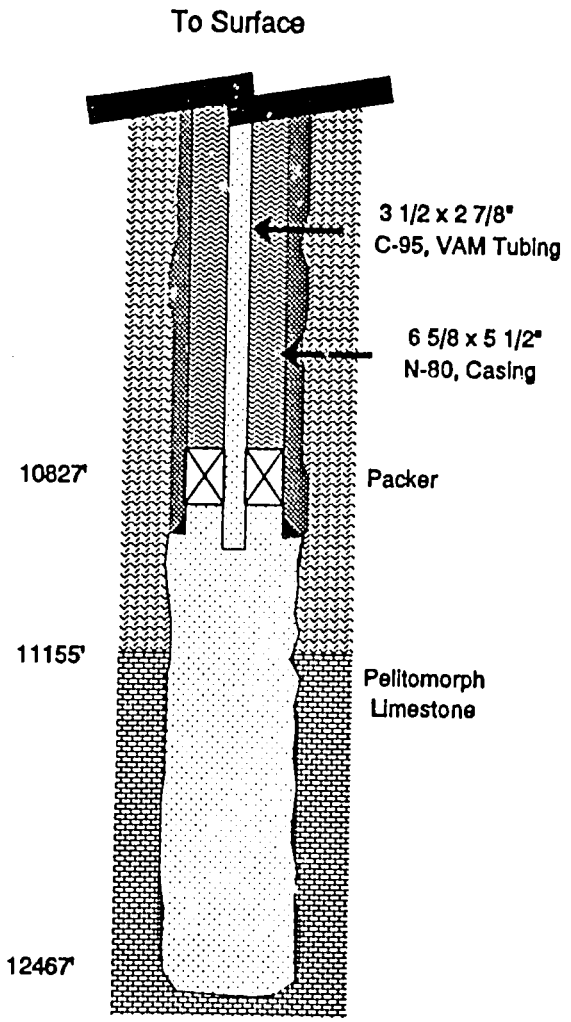

Job Schematic

Calculations

Pw = Wellhead Treating Pressure
Pw = BHTP - Ph + Pf + Ppf
Pw = ISIP + Pf + Ppf

BHTP = Bottom Hole Treating Pressure
= 0.906 psi/ft (Fracture Gradient)
= 0.906 psi/ft * 11811 ft
= 10701 psi

Ph = Hydrostatic Head of Fresh Water
= 0.4312 psi/ft * 11811 ft
= 5093 psi

Pf = Friction Loss In Pipe
= 2804 psi at 20 bbl/min

Ppf = Perforation Friction
= 0 psi

Pw = 10701 - 5093 + 2804 + 0
= 8412 psi

HHP = Hydraulic Horsepower
= (8412 * 20) / 40.8

HHP = 4124

Engineering Program Results

Friction Loss Values for 20 lb WG-11
per 1000 gal 2 pct KCl

DIAMETER (INCH) 2.674
LENGTH (FT) 100

FLOW RATE (BPM)	FRICTION PRESSURE (PSI)	TOTAL (PSI)
1.0	0.5	0.5
2.0	1.2	1.2
3.0	2.0	2.0
4.0	2.9	2.9
5.0	3.9	3.9
6.0	5.0	5.0
7.0	6.1	6.1
8.0	7.3	7.3
9.0	8.5	8.5
10.0	9.8	9.8
11.0	11.1	11.1
12.0	12.4	12.4
13.0	13.8	13.8
14.0	15.2	15.2
15.0	16.6	16.6
16.0	18.1	18.1
17.0	19.6	19.6
18.0	21.1	21.1
19.0	22.6	22.6
20.0	24.2	24.2
21.0	25.8	25.8
22.0	27.4	27.4
23.0	29.1	29.1
24.0	30.7	30.7
25.0	32.4	32.4
26.0	34.1	34.1
27.0	35.8	35.8
28.0	37.6	37.6
29.0	39.4	39.4
30.0	41.1	41.1
31.0	42.9	42.9
32.0	44.8	44.8
33.0	46.6	46.6
34.0	48.5	48.5
35.0	50.3	50.3
36.0	52.2	52.2
37.0	54.1	54.1
38.0	56.0	56.0
39.0	58.0	58.0
40.0	59.9	59.9

Acid Frac

Friction Loss Values for 50 lb WG-11
per 1000 gal 2 pct KCl

DIAMETER (INCH) 2.674
LENGTH (FT) 100

FLOW RATE (BPM)	FRICTION PRESSURE (PSI)	TOTAL (PSI)
1.0	2.9	2.9
2.0	3.9	3.9
3.0	4.6	4.6
4.0	5.1	5.1
5.0	5.6	5.6
6.0	6.1	6.1
7.0	6.5	6.5
8.0	7.4	7.4
9.0	8.5	8.5
10.0	9.6	9.6
11.0	10.8	10.8
12.0	12.0	12.0
13.0	13.2	13.2
14.0	14.5	14.5
15.0	15.7	15.7
16.0	17.0	17.0
17.0	18.3	18.3
18.0	19.6	19.6
19.0	20.9	20.9
20.0	22.2	22.2
21.0	23.6	23.6
22.0	24.9	24.9
23.0	26.3	26.3
24.0	27.7	27.7
25.0	29.1	29.1
26.0	30.5	30.5
27.0	31.9	31.9
28.0	33.3	33.3
29.0	34.8	34.8
30.0	36.2	36.2
31.0	37.7	37.7
32.0	39.1	39.1
33.0	40.6	40.6
34.0	42.1	42.1
35.0	43.6	43.6
36.0	45.1	45.1
37.0	46.6	46.6
38.0	48.1	48.1
39.0	49.7	49.7
40.0	51.2	51.2

Acid Frac

Friction Loss Values for 5 gal SGA-HT
per 1000 gal 15 pct HCl

DIAMETER (INCH) 2.674
LENGTH (FT) 100

FLOW RATE (BPM)	FRICTION PRESSURE (PSI)	TOTAL (PSI)
1.0	0.4	0.4
2.0	1.1	1.1
3.0	1.9	1.9
4.0	2.9	2.9
5.0	3.9	3.9
6.0	5.0	5.0
7.0	6.1	6.1
8.0	7.4	7.4
9.0	8.7	8.7
10.0	10.0	10.0
11.0	11.4	11.4
12.0	12.9	12.9
13.0	14.4	14.4
14.0	15.9	15.9
15.0	17.5	17.5
16.0	19.1	19.1
17.0	20.7	20.7
18.0	22.4	22.4
19.0	24.1	24.1
20.0	25.9	25.9
21.0	27.7	27.7
22.0	29.5	29.5
23.0	31.4	31.4
24.0	33.2	33.2
25.0	35.2	35.2
26.0	37.1	37.1
27.0	39.1	39.1
28.0	41.1	41.1
29.0	43.1	43.1
30.0	45.1	45.1
31.0	47.2	47.2
32.0	49.3	49.3
33.0	51.4	51.4
34.0	53.6	53.6
35.0	55.7	55.7
36.0	57.9	57.9
37.0	60.2	60.2
38.0	62.4	62.4
39.0	64.7	64.7
40.0	66.9	66.9

Job Recommendation

PREFLUSH DETAILS: (5,000 gal)

Base Fluid	Fresh Water
pH Buffer	2.5 lbs/M HYG-3
pH Buffer	2.5 lbs/M K-34
Surfactant	1 gal/M LOSURF-300
Gelling Agent	20 lbs/M WG-11

GELLED FLUID DETAILS: (10,000 gal)

Base Fluid	Fresh Water
pH Buffer	2.5 lbs/M HYG-3
pH Buffer	2.5 lbs/M K-34
Surfactant	1 gal/M LOSURF-300
Gelling Agent	50 lbs/M WG-11

GELLED ACID DETAILS: (6,000 gal)

Base Fluid	15% Hydrochloric Acid
Corrosion Inhibitor	1.5 gal/M HAI-85M
Surfactant	1 gal/M LOSURF-300
Gelling Agent	5 gal/M SGA-HT®

OVERFLUSH DETAILS: (17,000 gal)

Base Fluid	Fresh Water
pH Buffer	2.5 lbs/M HYG-3
pH Buffer	2.5 lbs/M K-34
Surfactant	1 gal/M LOSURF-300
Gelling Agent	20 lbs/M WG-11

DISPLACEMENT DETAILS: (3,200 gal)

Base Fluid	Fresh Water
pH Buffer	2.5 lbs/M HYG-3
Breaker	2.5 lbs/M K-34
Gelling Agent	20 lbs/M WG-11

Fluid recommendations need to be verified if possible by means of coretests.

Acid Frac

Job Procedure

STAGE	FLUID
1	5,000 gal Preflush
2	10,000 gal Gelled Fluid
3	6,000 gal Gelled Acid
4	17,000 gal Overflush
5	3,200 gal Displacement

Acid Frac

Cost Estimate

Price Ref	Description	Qty	U/M	Unit Price	Total
	**** Stimulation Chemicals ****				
310-363	HYG-3	100	LB	DM 5.60	DM 560.00
310-290	K-34 BREAKER	100	LB	1.28	128.00
218-703	LOSURF 300	55	GAL	68.64	3,775.20
310-888	WG-11	1000	LB	15.68	15,680.00
201-004	HYDROCHLORIC ACID	15	%	0.00	N/C
		6000	GAL		
210-013	HAI-85M	10	GAL	126.08	1,260.80
206-326	SGA-HT	30	GAL	117.60	3,528.00
	Stimulation Chemicals Total				DM 24,148.00
	"****Transport****"				
300-111	MILEAGE (1800 KM FROM VIENNA)	6	TRK	8,100.00	48,600.00
	Transport Total				DM 48,600.00
	**** Personnel ****				
300-185	ENGINEER	1	MAN	1,200.00	2,400.00
		2	DAY		
300-185	SUPERVISOR	1	MAN	1,200.00	6,000.00
		5	DAY		
300-179	BLENDER OPERATOR	1	MAN	900.00	4,500.00
		5	DAY		
300-179	OPERATOR	2	MAN	900.00	9,000.00
		5	DAY		
300-181	ASSISTANT OPERATOR	2	MAN	800.00	8,000.00
		5	DAY		
	Personnel Total				DM 29,900.00
	**** Stimulation Equipment ****				
301-002	PUMP CHARGES - HHP(MIN. 4 HRS)	4124	HHP	4.00	65,984.00
		4	HR		
301-205	PROPORTIONER(MIN. 4 HOURS)	1	UNT	950.00	3,800.00
		4	HR		

Acid Frac

Price Ref	Description	Qty	U/M	Unit Price	Total
301-040	FLUID PUMPING CHARGE	41200	GAL	0.19	7,828.00
301-157	GELLING CHARGE	41200	GAL	0.17	7,004.00
307-025	TANK STORAGE	41200	GAL	0.11	4,532.00
307-660	FLOWMETER - 3"	2	EA	230.00	460.00
307-772	COMPUPAC SYSTEM W/HALLIBURTON	1	JOB	1,250.00	1,250.00
307-546	DISCHARGE MANIFOLD	1	EA	675.00	675.00
307-629	SUCTION MANIFOLD	1	EA	475.00	475.00
307-678	COMMUNICATION HEADSETS	6	EA	125.00	750.00
	Stimulation Equipment Total				DM 91,254.00

==========

TOTAL AMOUNT	DM 196,190.00
DISCOUNT AMOUNT	13,913.70
DISCOUNTED TOTAL	DM 182,276.30

NOTE: Service Location - Emmen

Engineering Program Results

ADP
Halliburton Services' Acidizing Design Program

ALBPETROL, ALBANIA, DELVINA 4, LIMESTONE
FRACTURE ACIDIZING DESIGN

Fracture Acidizing Design for MY-T-ACID* Treatment

Well and Formation Data

Tubing ID	2.26	in.
Tubing OD	2.87	in.
Casing ID	4.95	in.
Casing OD	5.50	in.
Depth	11155.	ft
Formation temperature	97.	F
Formation thickness	131.	ft
Gross height	1312.	ft
Modulus of elasticity	8.70E+06	psi
Well spacing	80.	acres
Drainage radius	933.	ft
Reservoir pressure	5975.	psi
Closure pressure	10000.	psi
Reservoir fluid viscosity	0.04	cp
Reservoir fluid compressibility	6.88E-04	1/psi
Porosity	4.0	percent
Initial permeability	0.20	md

ADP
Halliburton Services' Acidizing Design Program

ALBPETROL, ALBANIA, DELVINA 4, LIMESTONE
FRACTURE ACIDIZING DESIGN

Treating Information
==========

Treatment Down Tubing
Acid type----15% HCl

HCl concentration.....	15.0	percent
Activation energy.....	15.6	kCal/GMol
Reaction rate constant for SGA-HT* Acid.	4.30E-07	at 97.F
Order of reaction for SGA-HT* Acid.....	0.00	
Bottom hole treating pressure.....	10430.	psi
Acid temperature.....	65.00	F
Average injection rate.....	20.00	bpm
Damage ratio.....	1.00	

ADP
Halliburton Services' Acidizing Design Program

ALBPETROL, ALBANIA, DELVINA 4, LIMESTONE
FRACTURE ACIDIZING DESIGN

Fluid Data
==========

	N'	K'	Cw (pay)	Viscosity At Avg Width	Cw (non-pay)
Preflush	0.67	0.002800	0.0034	14.7	0.00340
Gel Fluid	0.41	0.047000	0.0027	43.2	0.00000
SGA-HT*Acid	0.81	0.000450	0.0030	6.0	0.00300
Overflush	0.67	0.002800	0.0034	14.7	0.00340

K' - lb-sec**N'/sqft
Cw - ft/sqrt(min)
Viscosity - cp

Treatment Schedule
==========

5000. Gallons of Preflush at 20.00 bpm
10000. Gallons of Gel Fluid at 20.00 bpm
6000. Gallons of HCl with SGA-HT* at 20.00 bpm
17000. Gallons of Overflush at 20.00 bpm

Kristianovich-Zheltov Geometry Profile
==========

Stages	Created Width (in)	Created Length (ft)	Leading Edges Preflush (ft)	Gel (ft)	Acid (ft)	Overflush (ft)	Fingering (%)
Preflush	0.02	62.					
Gel	0.04	130.	130.	130.			
Acid	0.03	353.	353.	353.	353.		76.21
Overflush	0.04	421.	421.	421.	421.	84.	

ADP
Halliburton Services' Acidizing Design Program

ALBPETROL, ALBANIA, DELVINA 4, LIMESTONE
FRACTURE ACIDIZING DESIGN

Etching Pattern
==========

Distance (ft)	Temperature (F)	Etched Width (in)	Flow Capacity (Darcy-ft)	Acid Conc (%)
0.	67.	0.007	1.37	0.00
20.	93.	0.005	0.48	0.00
40.	96.	0.005	0.48	0.00
60.	97.	0.005	0.48	0.00
80.	97.	0.004	0.35	0.00
95.	97.	0.001	0.00	1.02

Temperature Profile After Acid Stages
==========

Distance (ft)	Center Temperature (F)	Wall Temperature (F)	Acid Conc (%)
0.	68.	69.	14.91
20.	95.	95.	11.64
40.	97.	97.	8.73
60.	97.	97.	5.79
80.	97.	97.	2.84
92.	97.	97.	1.08

ADP
Halliburton Services' Acidizing Design Program

ALBPETROL, ALBANIA, DELVINA 4, LIMESTONE
FRACTURE ACIDIZING DESIGN

Summary Of Results
==========

Total volume pumped.....	38000.	(gal)
Created maximum fracture width.....	0.04	(in)
Created fracture length(half wing).....	421.	(ft)
Fluid efficiency.....	72.4	(%)
Acid penetration.....	421.	(ft)
Live acid distance.....	95.	(ft)
Etched length.....	95.	(ft)
Fingering efficiency.....	76.2	(%)
Rock dissolved.....	8242.	(lb)
Rock dissolving efficiency.....	75.	(%)
Production increase.....	3.42	

*Registered Trademark of Halliburton Company

The above report is based on sound engineering practices, but because of variable well conditions and other information which must be relied upon, Halliburton makes no warranty, express or implied, as to the accuracy of the data or of any calculations or opinions expressed herein. You agree that Halliburton shall not be liable for any loss or damage whether due to negligence or otherwise arising out of or in connection with such data calculations or opinions.

Engineering Program Results

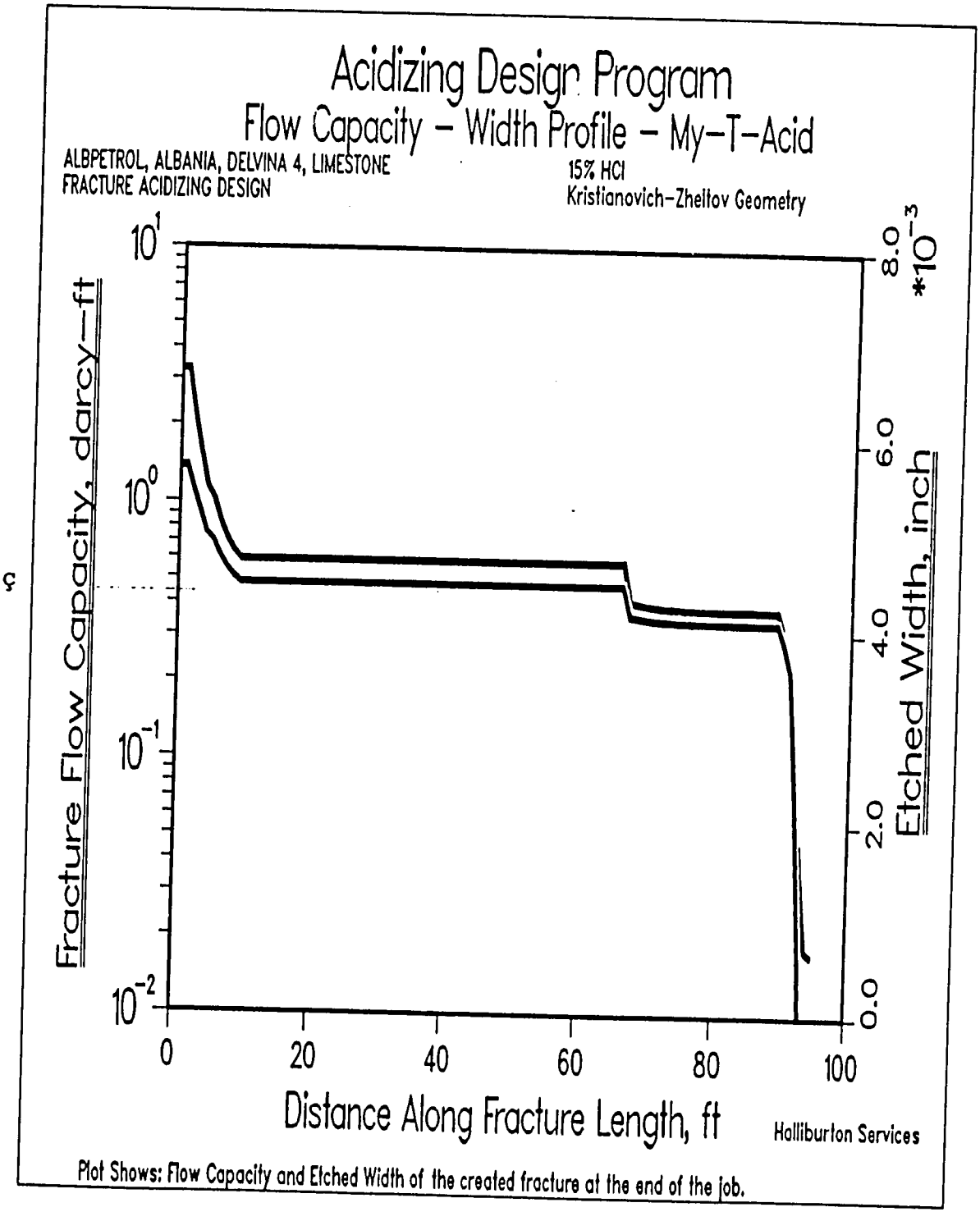

Engineering Program Results

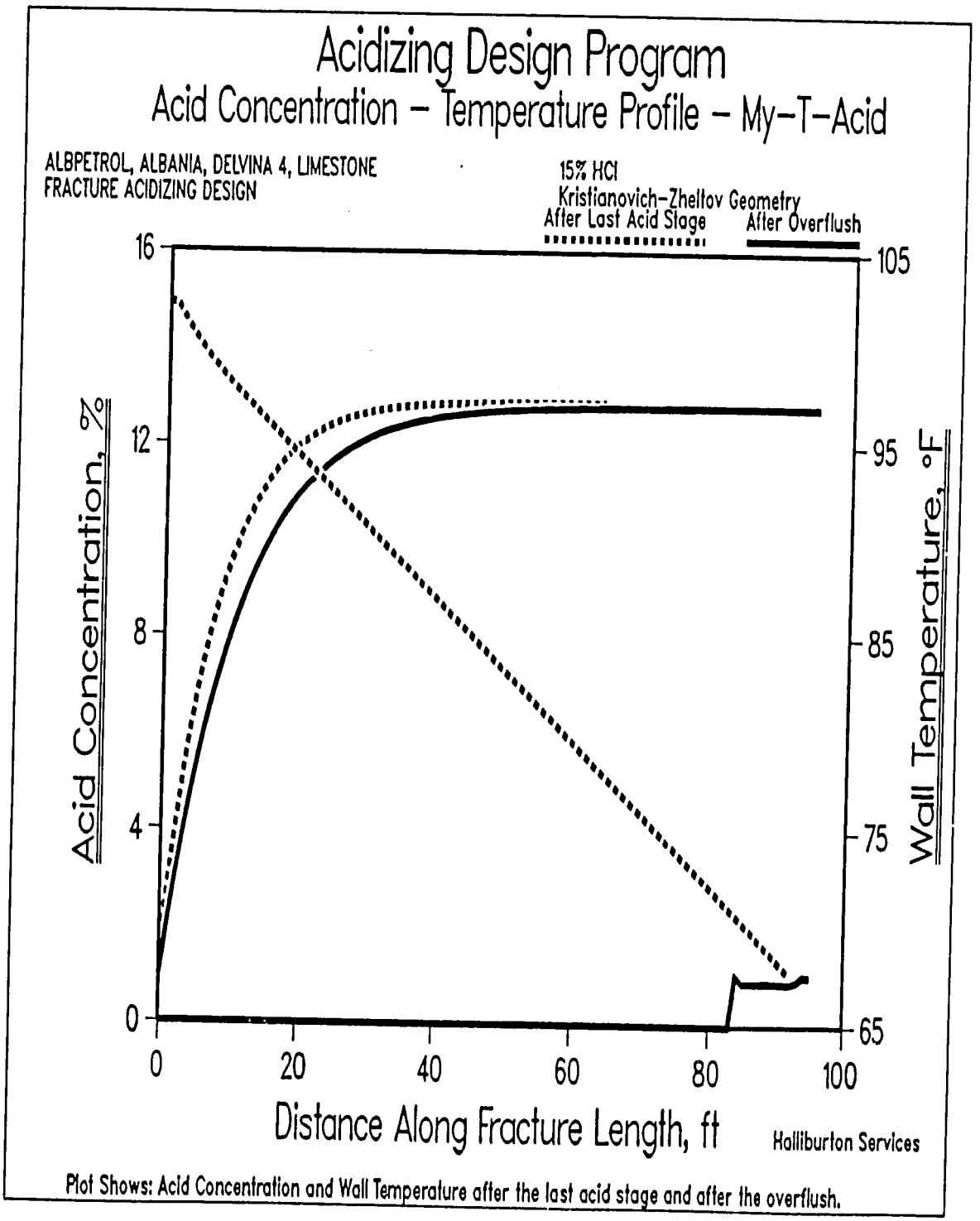

Plot Shows: Acid Concentration and Wall Temperature after the last acid stage and after the overflush.

Conditions

NOTE

The cost in this analysis is good for the materials and/or services outlined within. These prices are based on Halliburton Services being awarded the work on a first call basis. Prices will be reviewed for adjustments if awarded on 2nd or 3rd call basis and/or after 30 days of this written analysis. This is in an effort to schedule our work and maintain a high quality of performance for our customers.

The unit prices stated in the proposal are based on our current published prices. The projected equipment, personnel, and material needs are only estimates based on information about the work presently available to us. At the time the work is actually performed, conditions then existing may require an increase or decrease in the equipment, personnel, and/or material needs. Charges will be based upon unit prices in effect at the time the work is performed and the amount of equipment, personnel, and/or material actually utilized in the work. Taxes, if any, are not included. Applicable taxes, if any, will be added to the actual invoice.

It is understood and agreed between the parties that with exception of the subject discounts, all said services and materials will be furnished in accordance with the terms and conditions of Halliburton Services' regular work orders applicable to the particular item. In connection, it is also understood and agreed that Customer will continue to execute Halliburton Services usual field work orders and/or tickets customarily required by Halliburton Services in connection with the furnishing of said services and materials.

Product Descriptions

ADP

The ADP acidizing program combines the latest advances in reaction kinetics of acid and calcareous rock with Halliburton's highly respected fracturing technology, to help determine live acid penetration during fracture acidizing. Given the combination of fluids, volumes, and rate you specify, the ADP program will rigorously calculate fracture geometry, correctly considering the presence of up to four different fluids with varying rheological properties. The program will also calculate acid penetration distance, etched fracture length, and effective fracture length for several types of fracture acidizing treatments, including conventional, MOD Acid, MY-T-ACID, CRA, and SGA-HT. In addition, the program can simulate the Alpha technique where acid and gelled water are alternately injected. It can also simulate alternating injection of any type of acid. The program also calculates the resultant fracture conductivity distribution and production increase based on formation and fracture properties.

HAI-85M Inhibitor

HAI-85M inhibitor has been blended to provide improved corrosion protection to oil field pipe when contacted by hydrochloric acid solutions. It shows improved performance in comparison to other organic inhibitors in 15% HCl at elevated temperatures but is particularly effective in 28% HCl. Under sulfide cracking conditions, SCA-130 should be used with HAI-85M inhibitor. SCA-130 lowers the corrosion rate in the presence of H2S and provides cracking protection. HAI-85 inhibitor provides protection up to 400 deg F and has excellent application in sandstone acidizing as well as in carbonate reservoirs. It is compatible with mutual solvent and anionic surfactants, which are recommended in sandstone acidizing. HAI-85M is the only corrosion inhibitor available which provides corrosion protection for high alloy steel tubulars such as 12-Cr.

SGA-HT® Gelling Agent

SGA-HT® gelling agent provides the exceptional live acid penetration capabilities of a stable gelled acid system at temperatures much higher than other acid gelling agents can withstand. It is effective even at bottomhole temperatures of up to 400 deg F. This deeper acid penetration is achieved through two important properties of SGA-HT® gelling agent: (1) the viscosity retention of the gel at high temperatures means wider fractures and more live acid gets deeper into the fracture before it spends itself on the formation; and (2) the SGA-HT® agent allows less fluid leakoff because of its viscosity and polymer filtration effect. More live acid remains in the fracture to react with the surface of the fracture; therefore, additional fluid loss additives may not be needed.

LOSURF-251, LOSURF-259, LOSURF-300, and LOSURF-357 Surfactants

Halliburton Service's LOSURF nonionic surfactants are exceptionally versatile and effective. Low concentrations of the LOSURF
surfactant yield excellent emulsion breaks in 30 minutes or less in a wide variety of treatment fluids and formation fluids. This low concentration effectiveness makes LOSURF surfactants comparatively economical.

Designed primarily for use in acidizing limestone and dolomite formations, these surfactants have been proven effective in a number of applications including: inhibited hydrochloric acid solutions; Halliburton's MOD Acid system and HTA-710 high
temperature acid system; chemically retarded acids (Halliburton's CRA-78 acid composition); sandstone stimulation treatments when used with MUSOL® or MUSOL® A solvents or CLA-STA® additives; and aqueous-based fluids such as potassium chloride (KCl), Halliburton's CLAYFIX material, brine, or fresh water. LOSURF surfactants not only help prevent emulsions, but also reduce both surface tension and interfacial tension. This reduced tension provides better wetting of the rock surface during treatment and faster cleanup after treatment. Frequently, these surfactants may reduce the pump pressure required to move the fluid downhole.

Site Layout

Well Site

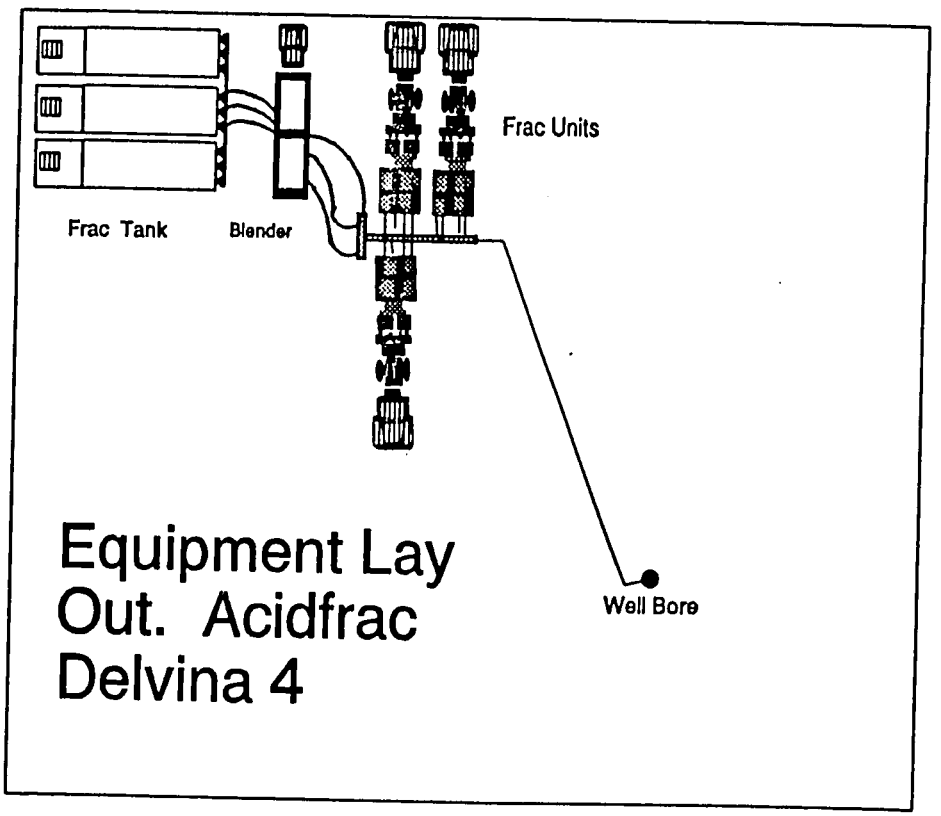

Fracturing Recommendation: Delvina 12

Halliburton Services

ALBPETROL
Fax: 355-42-34031
Patos, Albania

Delvina 12

Fracturing Recommendation

Prepared for: Mr P. Petoni

1/20/93

Version
1

Prepared by:
Klaas van Gijtenbeek
Halliburton Services
Europe Area Frac Team
Karel Doormanstraat 4
7825 VT Emmen, Holland
(31) 5910-36111

Halliburton Wants
a Safer World

Well Schematic

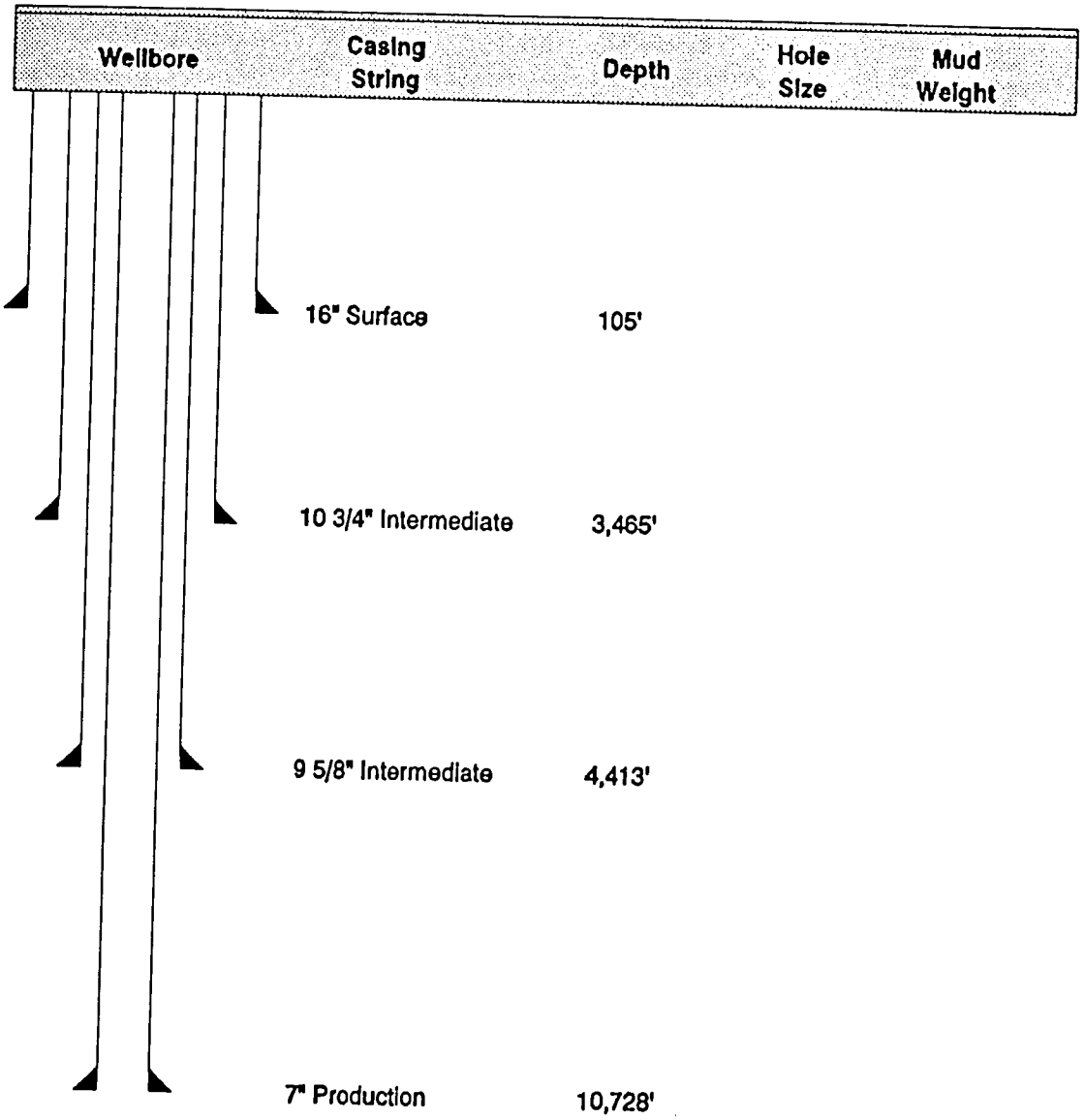

Acid Frac

Well Information

Well Depth	3700 Meter
Casing Size	7 Inch
Permeability	0.2 mD
Porosity	3 to 5 %
Bottom Hole Static Temp.	36 deg C.
Well Name	Delvina 12

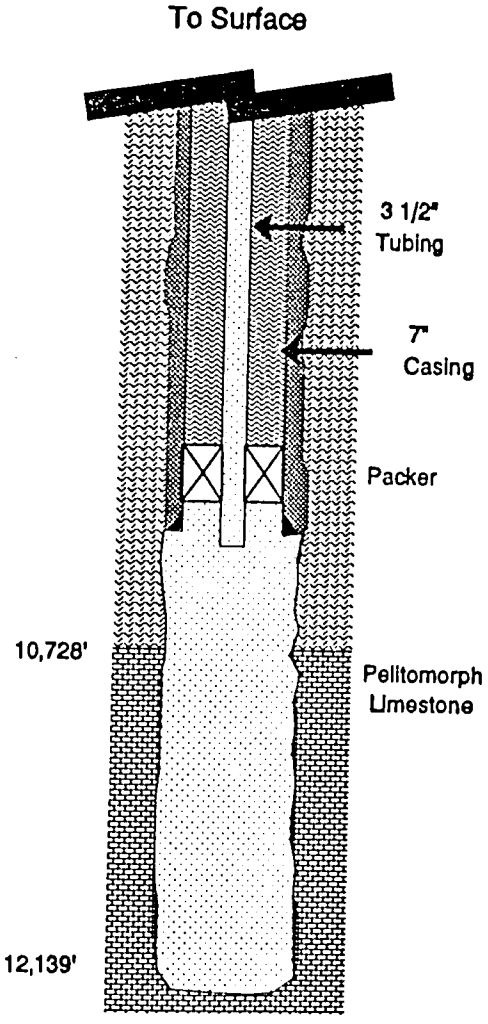

Job Schematic

Calculations

Pw = Wellhead Treating Pressure
Pw = BHTP - Ph + Pf + Ppf
Pw = ISIP + Pf + Ppf

BHTP = Bottom Hole Treating Pressure
= 0.906 psi/ft (Fracture Gradient)
= 0.906 psi/ft * 11434 ft
= 10359 psi

Ph = Hydrostatic Head of Fresh Water
= 0.4312 psi/ft * 11434 ft
= 4930 psi

Pf = Friction Loss In Pipe
= 2779 psi at 20 bbl/min

Ppf = Perforation Friction
= 0 psi

Pw = 10359 - 4930 + 2779 + 0
= 8208 psi

HHP = Hydraulic Horsepower
= (8208 * 20) / 40.8

HHP = 4024

Job Recommendation

PREFLUSH DETAILS: (5,500 gal)

Base Fluid	Fresh Water
pH Buffer	2.5 lbs/M HYG-3
pH Buffer	2.5 lbs/M K-34
Surfactant	1 gal/M LOSURF-300
Gelling Agent	20 lbs/M WG-11

GELLED FLUID DETAILS: (11,000 gal)

Base Fluid	Fresh Water
pH Buffer	2.5 lbs/M HYG-3
pH Buffer	2.5 lbs/M K-34
Surfactant	1 gal/M LOSURF-300
Gelling Agent	50 lbs/M WG-11

GELLED ACID DETAILS: (6,500 gal)

Base Fluid	15% Hydrochloric Acid
Corrosion Inhibitor	1.5 gal/M HAI-85M
Surfactant	1 gal/M LOSURF-300
Gelling Agent	5 gal/M SGA-HT®

OVERFLUSH DETAILS: (18,000 gal)

Base Fluid	Fresh Water
pH Buffer	2.5 lbs/M HYG-3
pH Buffer	2.5 lbs/M K-34
Surfactant	1 gal/M LOSURF-300
Gelling Agent	20 lbs/M WG-11

DISPLACEMENT DETAILS: (3,150 gal)

Base Fluid	Fresh Water
pH Buffer	2.5 lbs/M HYG-3
pH Buffer	2.5 lbs/M K-34
Gelling Agent	20 lbs/M WG-11

Fluid recommendations need to be verified by means of coretests.

Acid Frac

Job Procedure

STAGE	FLUID
1	5,500 gal Preflush
2	11,000 gal Gelled Fluid
3	6,500 gal Gelled Acid
4	18,000 gal Overflush
5	3,150 gal Displacement

Acid Frac

Cost Estimate

Price Ref	Description	Qty	U/M	Unit Price	Total
	**** Stimulation Chemicals ****				
310-363	HYG-3	100	LB	DM 5.60	DM 560.00
310-290	K-34 BREAKER	100	LB	1.28	128.00
218-703	LOSURF 300	55	GAL	68.64	3,775.20
310-888	WG-11	950	LB	15.68	14,896.00
201-004	HYDROCHLORIC ACID	15	%	0.00	N/C
		6500	GAL		
210-013	HAI-85M	10	GAL	126.08	1,260.80
206-326	SGA-HT	33	GAL	117.60	3,880.80
	Stimulation Chemicals Total				DM 24,148.00
	"****Transport*****"				
300-111	MILEAGE (1800 KM FROM VIENNA)	6	TRK	8,100.00	48,600.00
	Transport Total				DM 48,600.00
	**** Personnel ****				
300-185	ENGINEER	1	MAN	1,200.00	3,600.00
		3	DAY		
300-185	SUPERVISOR	1	MAN	1,200.00	6,000.00
		5	DAY		
300-179	BLENDER OPERATOR	1	MAN	900.00	4,500.00
		5	DAY		
300-179	OPERATOR	2	MAN	900.00	9,000.00
		5	DAY		
300-181	ASSISTANT OPERATOR	2	MAN	800.00	8,000.00
		5	DAY		
	Personnel Total				DM 29,900.00
	**** Stimulation Equipment ****				
301-002	PUMP CHARGES - HHP(MIN. 4 HRS)	4024	HHP	4.00	64,384.00
		4	HR		
301-205	PROPORTIONER(MIN. 4 HOURS)	1	UNT	950.00	3,800.00
		4	HR		

142

Acid Frac

Price Ref	Description	Qty	U/M	Unit Price	Total
301-040	FLUID PUMPING CHARGE	44150	GAL	0.19	8,388.50
301-157	GELLING CHARGE	44150	GAL	0.17	7,505.50
307-025	TANK STORAGE	44150	GAL	0.11	4,856.50
307-660	FLOWMETER - 3"	2	EA	230.00	460.00
307-772	COMPUPAC SYSTEM W/HALLIBURTON	1	JOB	1,250.00	1,250.00
307-546	DISCHARGE MANIFOLD	1	EA	675.00	675.00
307-629	SUCTION MANIFOLD	1	EA	475.00	475.00
307-678	COMMUNICATION HEADSETS	6	EA	125.00	750.00
	Stimulation Equipment Total				DM 91,254.00

TOTAL AMOUNT	DM 196,745.30
DISCOUNT AMOUNT	13,881.66
DISCOUNTED TOTAL	DM 182,853.64

NOTE: Service Location - Emmen

Engineering Program Results

ADP
Halliburton Services' Acidizing Design Program

ALBPETROL, ALBANIA, DELVINA 12, LIMESTONE
FRACTURE ACIDIZING DESIGN

Fracture Acidizing Design for MY-T-ACID* Treatment

Well and Formation Data

Tubing ID	2.67	in.
Tubing OD	3.50	in.
Casing ID	6.00	in.
Casing OD	7.00	in.
Depth	10728.	ft
Formation temperature	97.	F
Formation thickness	131.	ft
Gross height	1411.	ft
Modulus of elasticity	8.70E+06	psi
Well spacing	80.	acres
Drainage radius	933.	ft
Reservoir pressure	5975.	psi
Closure pressure	10000.	psi
Reservoir fluid viscosity	0.04	cp
Reservoir fluid compressibility	6.88E-04	1/psi
Porosity	4.0	percent
Initial permeability	0.20	md

ADP
Halliburton Services' Acidizing Design Program

ALBPETROL, ALBANIA, DELVINA 12, LIMESTONE
FRACTURE ACIDIZING DESIGN

Treating Information
==========

Treatment Down Tubing
Acid type----15% HCl

HCl concentration.....	15.0	percent
Activation energy.....	15.6	kCal/GMol
Reaction rate constant for SGA-HT* Acid.	4.30E-07	at 97.F
Order of reaction for SGA-HT* Acid.....	0.00	
Bottom hole treating pressure.....	10430.	psi
Acid temperature.....	65.00	F
Average injection rate.....	20.00	bpm
Damage ratio.....	1.00	

ADP
Halliburton Services' Acidizing Design Program

ALBPETROL, ALBANIA, DELVINA 12, LIMESTONE
FRACTURE ACIDIZING DESIGN

Fluid Data
==========

	N'	K'	Cw (pay)	Viscosity At Avg Width	Cw (non-pay)
Preflush	0.67	0.002800	0.0034	15.3	0.00340
Gel Fluid	0.41	0.047000	0.0027	46.5	0.00000
SGA-HT*Acid	0.81	0.000450	0.0030	6.2	0.00300
Overflush	0.67	0.002800	0.0034	15.3	0.00340

K' - lb-sec**N'/sqft
Cw - ft/sqrt(min)
Viscosity - cp

Treatment Schedule
==========

5500.	Gallons of Preflush	at	20.00 bpm
11000.	Gallons of Gel Fluid	at	20.00 bpm
6500.	Gallons of HCl with SGA-HT*	at	20.00 bpm
18000.	Gallons of Overflush	at	20.00 bpm

Kristianovich-Zheltov Geometry Profile
==========

Stages	Created Width (in)	Created Length (ft)	Leading Edges Preflush (ft)	Gel (ft)	Acid (ft)	Overflush (ft)	Fingering (%)
Preflush	0.02	62.					
Gel	0.04	132.	132.	132.			
Acid	0.03	358.	358.	358.	358.		75.36
Overflush	0.04	427.	427.	427.	427.	85.	

146

ADP
Halliburton Services' Acidizing Design Program

ALBPETROL, ALBANIA, DELVINA 12, LIMESTONE
FRACTURE ACIDIZING DESIGN

Etching Pattern
==========

Distance (ft)	Temperature (F)	Etched Width (in)	Flow Capacity (Darcy-ft)	Acid Conc (%)
0.	68.	0.008	1.95	0.00
20.	93.	0.005	0.64	0.00
40.	97.	0.005	0.64	0.00
60.	97.	0.005	0.64	0.00
80.	97.	0.005	0.52	0.00
89.	97.	0.001	0.00	1.06

Temperature Profile After Acid Stages
==========

Distance (ft)	Center Temperature (F)	Wall Temperature (F)	Acid Conc (%)
0.	68.	69.	14.90
20.	95.	95.	11.29
40.	97.	97.	8.19
60.	97.	97.	5.05
80.	97.	97.	1.92
85.	97.	97.	1.14

Engineering Program Results

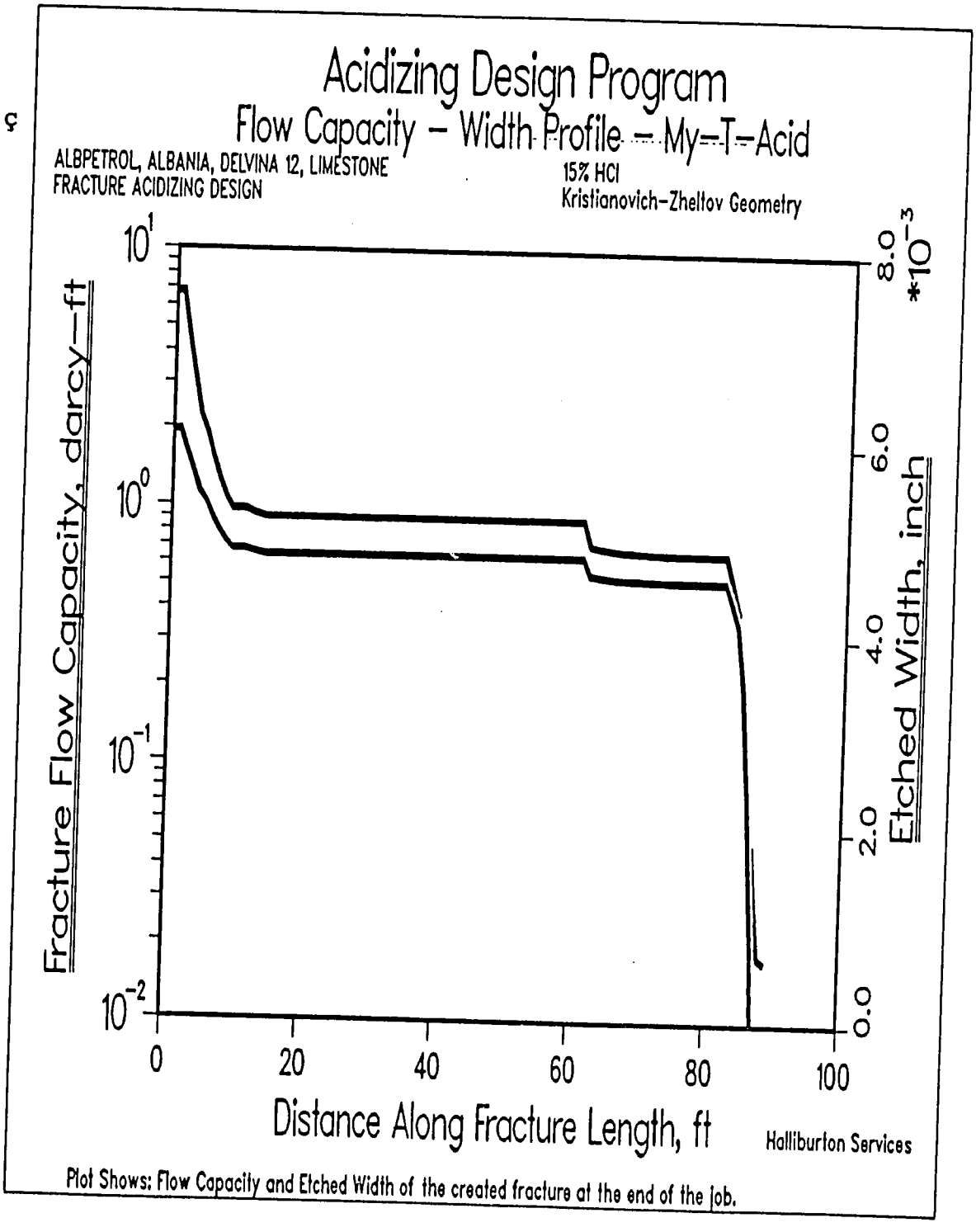

Plot Shows: Flow Capacity and Etched Width of the created fracture at the end of the job.

Engineering Program Results

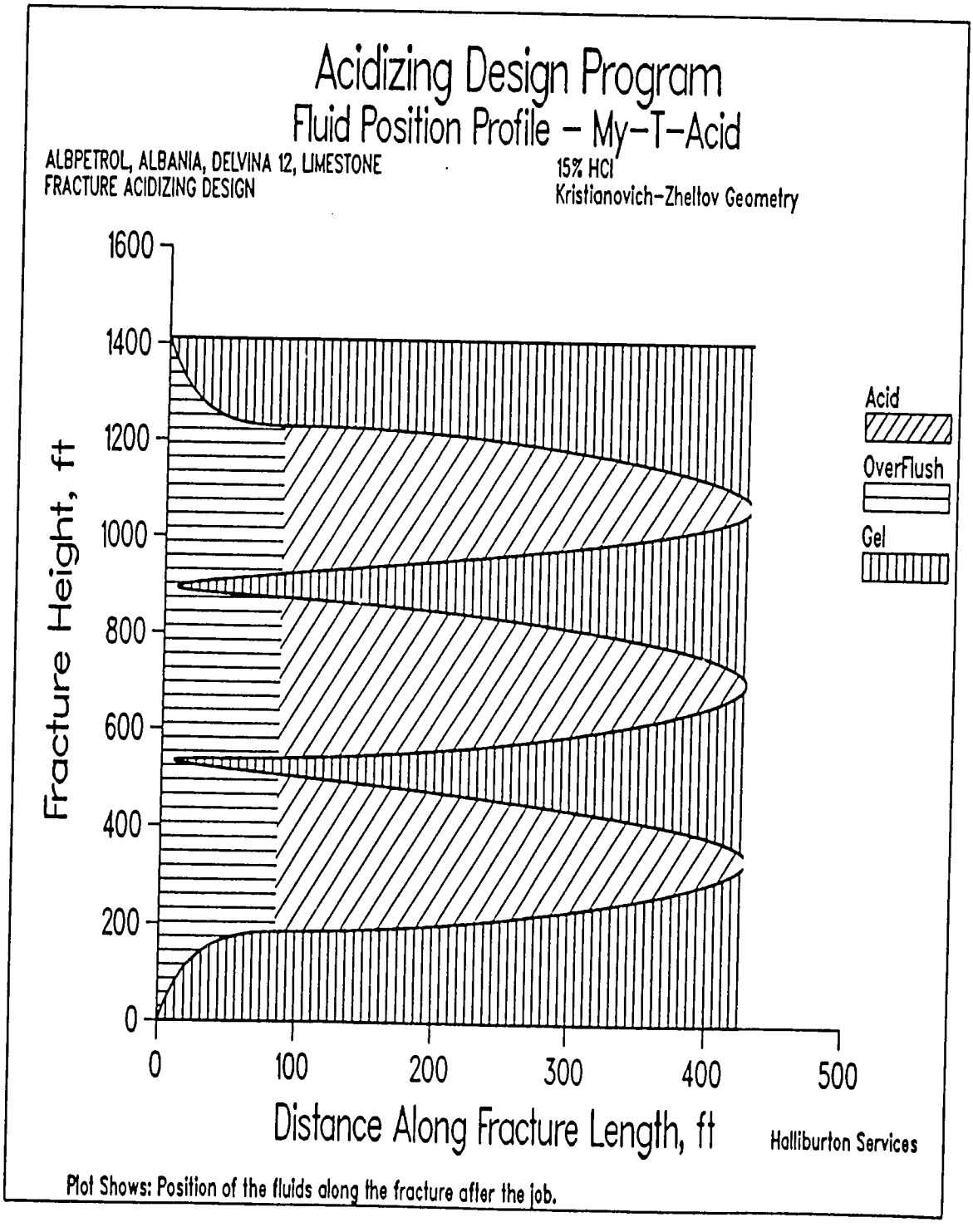

Conditions

NOTE

The cost in this analysis is good for the materials and/or services outlined within. These prices are based on Halliburton Services being awarded the work on a first call basis. Prices will be reviewed for adjustments if awarded on 2nd or 3rd call basis and/or after 30 days of this written analysis. This is in an effort to schedule our work and maintain a high quality of performance for our customers.

The unit prices stated in the proposal are based on our current published prices. The projected equipment, personnel, and material needs are only estimates based on information about the work presently available to us. At the time the work is actually performed, conditions then existing may require an increase or decrease in the equipment, personnel, and/or material needs. Charges will be based upon unit prices in effect at the time the work is performed and the amount of equipment, personnel, and/or material actually utilized in the work. Taxes, if any, are not included. Applicable taxes, if any, will be added to the actual invoice.

It is understood and agreed between the parties that with exception of the subject discounts, all said services and materials will be furnished in accordance with the terms and conditions of Halliburton Services' regular work orders applicable to the particular item. In connection, it is also understood and agreed that Customer will continue to execute Halliburton Services usual field work orders and/or tickets customarily required by Halliburton Services in connection with the furnishing of said services and materials.

Site Layout

Well Site

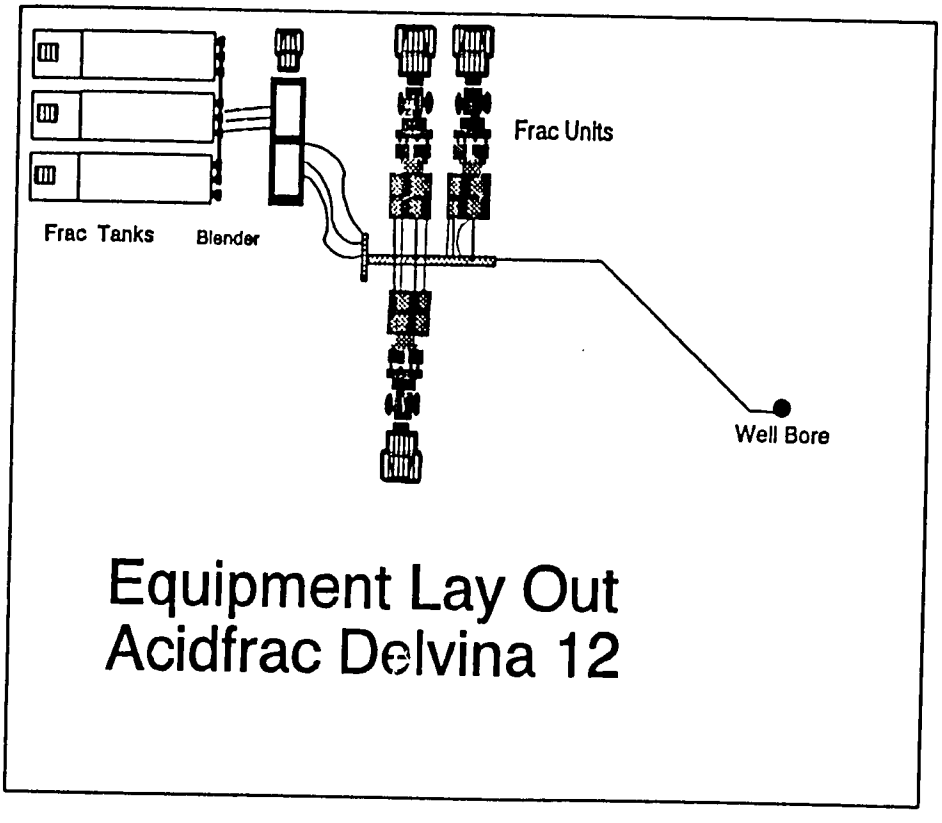

Section 3
Treatment Discussion

Treatment Discussion

1) Both wells are completed into an anticlinal "pelitomorph" limestone structure. Well Delvina 4 produces from a 400 meter open hole section with the limestone top located at 3400 meter. Its production in 1992 amounted to 5000 to 6000 Nm3 of gas per day with 0.7 to 0.9 m3 of condensate per day. Well Delvina 12 produces from a 430 m open hole section with the limestone top located on top of the anticlinal srtucture at 3270 meter. The Delvina 12 well produced 28000 Nm3 of gas and 8 m3 of condensate per day in 1992 through a 4.2 mm choke. In communication with Mr. S.A. Sehsuvaroglu it is mentioned that only 40 meter of the 430 meter limestone in Delvina 12 is producing. When this is consistent in other wells and the producing intervals can be identified then it would be wise to complete these wells with a liner across the limestone and perforate those sections from which the production is expected to come. This would facilitate treating the well and reduce treatmentcosts.

2) Both wells are now completed with a mixed 3 1/2" x 2 7/8" C-95 VAM tubing string.
In above referenced communication it is mentioned that acidizing has not been realized because of technical equipment (limitations). It is assumed that at 400 bar wellhead pressure nothing could be pumped into the well and that the limestone is impermeable. Assuming that the well was filled with liquid, the 400 bar wellhead pressure plus the hydrostatic pressure would give 738 bar (10701 psi) pressure downhole. From this, a minimum fracturing gradient of 0.906 psi/ft can be calculated. Assuming that a maximum surface pressure of 10,000 psi is allowed, a maximum allowable friction pressure during pumping can be calculated.

$$Pf = Pw + Ph - BHTP$$
$$= (10000 + 4901 - 10701) \text{ psi} = 4200 \text{ psi}$$

where: Pf = Friction Pressure
Pw = Wellheaad Pressure
Ph = Hydrostatic Pressure
BHTP = Bottom Hole Treating Pressure

With around 11,000 ft of tubing in the well, this would come down to 38 psi/100 ft. By completing the well with 3 1/2" tubing (2.674" I.D. = 10.49 mm wall thickness) a maximum pumprate of 27 barrel per minute can be achieved using a gelled fluid (see FRICT program output in technical proposal). Based on this it is recommended to recomplete the wells in such a way that fracturing can be made possible, i.e., using a 3 1/2" tubing or fracstring with a permanent or retrievable packer assembly and a 10,000 psi wellhead (or 5,000 psi wellhead bypassed with a wellhead isolation tool) or BOP. By using a packer, any "weak" casing spots or lower pressure rated casing can be bypassed.
A maximum design rate of 27 barrel per minute is allowed with above given completion recommendation. This is based on a minimum fracture gradient of 0.906 psi/ft. To allow for a higher than expected treatment pressure, a design rate of 20 barrels per minute is used for both wells.

3) Based on a design rate of 20 barrel per minute and assuming that 15% hydrochloric acid is available in Albania, our Acidizing Design Program (ADP) was used to construct a fluid schedule for both wells in such a way that with a minimum amount of fluids, a maximum effect in terms of production improvement could be achieved. By using the fluid schedules given in the technical proposal, our ADP program calculated a production increase of 3.42 for the Delvina 4 well and 3.28 for the Delvina 12 well. However, it should be noted that in fracture acidizing limestone sections, production improvements depend on how much of the open or opened natural fractures in the limestone can be brought in contact with the wellbore. Very often, production improvements have been seen exceeding predicted production improvements.

4) Total treatmentcost for both wells are calculated to be DM 365,139.94. This is based on a dollar exchange rate of 1 US$ = 1.60 DM.
Transportation of equipment over land is estimated to be 1800 km (from Vienna to Albania) for 6 trucks. When Albpetrol supplies storage tanks (equipped with proper manifolding to connect to our equipment) only 4 trucks are required (3 twin HQ pumptrucks- 2000 HHP each and one trailer with blender, chemicals and iron/manifolding).
Not included in the costestimates are possible iron control additives in the treatment fluids, diesel used on location, lodging and meals for the crew, hydrochloric acid and fresh watersupply.

Appendix D

Cost Calculations

FIER NITROGEN FERTILIZER PLANT

Ammonia in Unit 210 (Train 1)
Capacity 52%
Natural gas at 5500 Leks/1000 m^3

COST ITEM:	Unit Usage	Cost-Leks	Leks/mt	US $
Process Gas m^3/mt	1038.50	5500.00	5711.75	51.93
Reformer Fuel Gas m^3/mt	0.00	5500.00	0.00	0.00
Subtotal	1038.50		5711.75	51.93
UTILITIES:				
Electricity kWh/mt	2128.00	1.80	3830.40	34.82
Steam m^3/mt	0.56	1250.00	700.00	6.36
Boiler Feed Water m^3/mt	4.79	203.00	972.37	8.84
Ind. Water m^3/mt	16.00	2.26	36.16	0.33
CHEMICALS:				
Potassium Carbonate kg/mt	0.21	5.90	1.24	0.01
Formic Acid kg/mt	0.15	51.00	7.65	0.07
Copper Solution kg/mt	0.03	80.00	2.40	0.02
Arsenic kg/mt	0.10	3.00	0.30	0.00
Sodium Hydroxide kg/mt	0.31	29.00	8.99	0.08
Salt kg/mt	28.00	3.50	98.00	0.89
CATALYST:				
Catalyst			0.00	0.00
Subtotal Variable Costs			11369.26	103.36
FIXED OPERATING COSTS:				
Salaries & Overhead			44.00	0.40
Other Expense				0.00
Unit Total Consumption			331.00	3.01
Enterprise Total Consumption			35.70	0.32
MAINTENANCE:			7.70	7.00
Grand Total Costs			11787.66	114.09

FIER NITROGEN FERTILIZER PLANT

Ammonia in Unit 210 (Train 1)
Capacity 52%
Natural gas at 8000 Leks/1000 m^3

COST ITEM:	Unit Usage	Cost-Leks	Leks/mt	US $
Process Gas m^3/mt	1038.50	8000.00	8308.00	75.53
Reformer Fuel Gas m^3/mt	0.00	8000.00	0.00	0.00
Subtotal	1038.50		8308.00	75.53
UTILITIES:				
Electricity kWh/mt	2128.00	1.80	3830.40	34.82
Steam m^3/mt	0.56	1250.00	700.00	6.36
Boiler Feed Water m^3/mt	4.79	203.00	972.37	8.84
Ind. Water m^3/mt	16.00	2.26	36.16	0.33
CHEMICALS:				
Potassium Carbonate kg/mt	0.21	5.90	1.24	0.01
Formic Acid kg/mt	0.15	51.00	7.65	0.07
Copper Solution kg/mt	0.03	80.00	2.40	0.02
Arsenic kg/mt	0.10	3.00	0.30	0.00
Sodium Hydroxide kg/mt	0.31	29.00	8.99	0.08
Salt kg/mt	28.00	3.50	98.00	0.89
CATALYST:				
Catalyst			0.00	0.00
Subtotal Variable Costs			13965.51	126.96
FIXED OPERATING COSTS:				
Salaries & Overhead			44.00	0.40
Other Expense				0.00
Unit Total Consumption			331.00	3.01
Enterprise Total Consumption			35.70	0.32
MAINTENANCE:			770.00	7.00
Grand Total Costs			15146.21	137.69

FIER NITROGEN FERTILIZER PLANT

Ammonia in Unit 210 (Train 1)
Capacity 51%
Gasoline at 24 Leks/L

COST ITEM:	Unit Usage	Cost-Leks	Leks/mt	US $
Gasoline L/mt	1273.58	24.00	30566.04	277.87
Fuel Gas m^3/mt	0.00	3000.00	0.00	0.00
Subtotal	1273.58		30566.04	277.87
UTILITIES:				
Electricity kWh/mt	1826.00	1.80	3286.80	29.88
Steam m^3/mt	2.14	1250.00	2675.00	24.32
Boiler Feed Water m^3/mt	11.00	203.00	2233.00	20.30
Ind. Water m^3/mt	59.50	2.26	134.47	1.22
CHEMICALS:				
Potassium Carbonate kg/mt	1.13	5.90	6.67	0.06
Formic Acid kg/mt	0.15	51.00	7.65	0.07
Copper Solution kg/mt	0.03	80.00	2.40	0.02
Arsenic kg/mt	0.56	3.00	1.68	0.02
Sodium Hydroxide kg/mt	0.31	29.00	8.99	0.08
Salt kg/mt	115.20	3.50	403.20	3.67
CATALYST:				
Catalyst			0.00	0.00
Subtotal Variable Costs			39325.89	357.51
FIXED OPERATING COSTS:				
Salaries & Overhead			306.00	2.78
Other Expenses				0.00
Unit Total Consumption			3680.00	33.45
Enterprise Total Consumption			213.00	1.94
MAINTENANCE:			770.00	7.00
Grand Total Costs			44294.89	402.68

FIER NITROGEN FERTILIZER PLANT

Ammonia in Unit 210 (Train 1)
Capacity 51%
Gasoline at 17.75 Leks/L

COST ITEM:	Unit Usage	Cost-Leks	Leks/mt	US $
Gasoline L/mt	1273.58	17.75	22606.13	205.51
Fuel Gas m^3/mt	0.00	3000.00	0.00	0.00
Subtotal	1273.58		22606.13	205.51
UTILITIES:				
Electricity kWh/mt	1826.00	1.80	3286.80	29.88
Steam m^3/mt	2.14	1250.00	2675.00	24.32
Boiler Feed Water m^3/mt	11.00	203.00	2233.00	20.30
Ind. Water m^3/mt	59.50	2.26	134.47	1.22
CHEMICALS:				
Potassium Carbonate kg/mt	1.13	5.90	6.67	0.06
Formic Acid kg/mt	0.15	51.00	7.65	0.07
Copper Solution kg/mt	0.03	80.00	2.40	0.02
Arsenic kg/mt	0.56	3.00	1.68	0.02
Sodium Hydroxide kg/mt	0.31	29.00	8.99	0.08
Salt kg/mt	115.20	3.50	403.20	3.67
CATALYST:				
Catalyst			0.00	0.00
Subtotal Variable Costs			31365.99	285.15
FIXED OPERATING COSTS:				
Salaries & Overhead			306.00	2.78
Other Expenses				0.00
Unit Total Consumption			3680.00	33.45
Enterprise Total Consumption			213.00	1.94
MAINTENANCE:			770.00	7.00
Grand Total Costs			36334.99	330.32

FIER NITROGEN FERTILIZER PLANT

Ammonia in Unit 210 (Train 1)
Capacity 100%
Gasoline at 17.75 Leks/L

COST ITEM:	Unit Usage	Cost-Leks	Leks/mt	US $
Gasoline L/mt	1273.58	17.75	22606.13	205.51
Fuel Gas m^3/mt	0.00	3000.00	0.00	0.00
Subtotal	1273.58		22606.13	205.51
UTILITIES:				
Electricity kWh/mt	1607.00	1.80	2892.60	26.30
Steam m^3/mt	0.56	1250.00	700.00	6.36
Boiler Feed Water m^3/mt	2.50	203.00	507.50	4.61
Ind. Water m^3/mt	10.20	2.26	23.05	0.21
CHEMICALS:				
Potassium Carbonate kg/mt	1.13	5.90	6.67	0.06
Formic Acid kg/mt	0.15	51.00	7.65	0.07
Copper Solution kg/mt	0.03	80.00	2.40	0.02
Arsenic kg/mt	0.56	3.00	1.68	0.02
Sodium Hydroxide kg/mt	0.31	29.00	8.99	0.08
Salt kg/mt	16.00	3.50	56.00	0.51
CATALYST:				
Catalyst			0.00	0.00
Subtotal Variable Costs			26812.67	243.75
FIXED OPERATING COSTS:				
Salaries & Overhead			306.00	2.78
Other Expenses				0.00
Unit Total Consumption			3680.00	33.45
Enterprise Total Consumption			213.00	1.94
MAINTENANCE:			770.00	7.00
Grand Total Costs			31781.67	288.92

FIER NITROGEN FERTILIZER PLANT

Ammonia in Unit 210 (Train 1)
Capacity 100%
Gasoline at 24 Leks/L

COST ITEM:	Unit Usage	Cost-Leks	Leks/mt	US $
Gasoline L/mt	1273.58	24.00	30566.04	277.87
Fuel Gas m^3/mt	0.00	3000.00	0.00	0.00
Subtotal	1273.58		30566.04	277.87
UTILITIES:				
Electricity kWh/mt	1607.00	1.80	2892.60	26.30
Steam m^3/mt	0.56	1250.00	700.00	6.36
Boiler Feed Water m^3/mt	2.50	203.00	507.50	4.61
Ind. Water m^3/mt	10.20	2.26	23.05	0.21
CHEMICALS:				
Potassium Carbonate kg/mt	1.13	5.90	6.67	0.06
Formic Acid kg/mt	0.15	51.00	7.65	0.07
Copper Solution kg/mt	0.03	80.00	2.40	0.02
Arsenic kg/mt	0.56	3.00	1.68	0.02
Sodium Hydroxide kg/mt	0.31	29.00	8.99	0.08
Salt kg/mt	16.00	3.50	56.00	0.51
CATALYST:				
Catalyst			0.00	0.00
Subtotal Variable Costs			34772.58	316.11
FIXED OPERATING COSTS:				
Salaries & Overhead			306.00	2.78
Other Expenses				0.00
Unit Total Consumption			3680.00	33.45
Enterprise Total Consumption			213.00	1.94
MAINTENANCE:			770.00	7.00
Grand Total Costs			39741.58	361.29

FIER NITROGEN FERTILIZER PLANT

Ammonia in Unit 210 (Train 1)
Capacity 100%
Natural gas at 8000 Leks/1000 m^3

COST ITEM:	Unit Usage	Cost-Leks	Leks/mt	US $
Process Gas m^3/mt	952.00	8000.00	7616.00	69.24
Reformer Fuel Gas m^3/mt	2.00	8000.00	16.00	0.15
Subtotal	954.00		7632.00	69.38
UTILITIES:				
Electricity kWh/mt	1607.00	1.80	2892.60	26.30
Steam m^3/mt	0.56	1250.00	700.00	6.36
Boiler Feed Water m^3/mt	3.50	203.00	710.50	6.46
Ind. Water m^3/mt	10.20	2.26	23.05	0.21
CHEMICALS:				
Potassium Carbonate kg/mt	0.21	5.90	1.24	0.01
Formic Acid kg/mt	0.15	51.00	7.65	0.07
Copper Solution kg/mt	0.03	80.00	2.40	0.02
Arsenic kg/mt	0.10	3.00	0.30	0.00
Sodium Hydroxide kg/mt	0.31	29.00	8.99	0.08
Salt kg/mt	16.00	3.50	56.00	0.51
CATALYST:				
Catalyst			0.00	0.00
Subtotal Variable Costs			12034.73	109.41
FIXED OPERATING COSTS:				
Salaries & Overhead			44.00	0.40
Other Expense				0.00
Unit Total Consumption			331.00	3.01
Enterprise Total Consumption			35.70	0.32
MAINTENANCE:			770.00	7.00
Grand Total Costs			13215.43	120.14

FIEF. NITROGEN FERTILIZER PLANT

Ammonia in Unit 210 (Train 1)
Capacity 100%
Natural gas at 3000 Leks/1000 m^3

COST ITEM:	Unit Usage	Cost-Leks	Leks/mt	US $
Process Gas m^3/mt	952.00	3000.00	2856.00	25.96
Reformer Fuel Gas m^3/mt	2.00	3000.00	6.00	0.05
Subtotal	954.00		2862.00	26.02
UTILITIES:				
Electricity kWh/mt	1607.00	1.80	2892.60	26.30
Steam m^3/mt	0.56	1250.00	700.00	6.36
Boiler Feed Water m^3/mt	3.50	203.00	710.50	6.46
Ind. Water m^3/mt	10.20	2.26	23.05	0.21
CHEMICALS:				
Potassium Carbonate kg/mt	0.21	5.90	1.24	0.01
Formic Acid kg/mt	0.15	51.00	7.65	0.07
Copper Solution kg/mt	0.03	80.00	2.40	0.02
Arsenic kg/mt	0.10	3.00	0.30	0.00
Sodium Hydroxide kg/mt	0.31	29.00	8.99	0.08
Salt kg/mt	16.00	3.50	56.00	0.51
CATALYST:				
Catalyst			0.00	0.00
Subtotal Variable Costs			7264.73	66.04
FIXED OPERATING COSTS:				
Salaries & Overhead			44.00	0.40
Other Expense				0.00
Unit Total Consumption			331.00	3.01
Enterprise Total Consumption			35.70	0.32
MAINTENANCE:			770.00	7.00
Grand Total Costs			8445.43	76.78

FIER NITROGEN FERTILIZER PLANT

Ammonia in Unit 211 (Train 2)
Capacity 100%
Natural gas at 3000 Leks/1000 m^3

COST ITEM:	Unit Usage	Cost-Leks	Leks/mt	US $
Process Gas m^3/mt	730.00	3000.00	2190.00	19.91
Reformer Fuel Gas m^3/mt	350.00	3000.00	1050.00	9.55
Subtotal	1080.00		3240.00	29.45
MMBtu/mt	30.59			
UTILITIES:				
Electricity kWh/mt	950.00	1.80	1710.00	15.55
Steam m^3/mt	0.85	1250.00	1062.50	9.66
Boiler Feed Water m^3/mt	3.67	203.00	745.01	6.77
Ind. Water m^3/mt	13.50	2.26	30.51	0.28
CHEMICALS:				
Potassium Carbonate kg/mt	0.19	5.90	1.12	0.01
Amino Acedic Acid kg/mt	0.22	51.00	11.22	0.10
Vanadium Pentoxide kg/mt	0.02	80.00	1.60	0.01
Trisodium Phosphate kg/mt	0.03	3.00	0.09	0.00
Activated Carbon kg/mt	0.06	29.00	1.74	0.02
Salt kg/mt	26.40	3.50	92.40	0.84
CATALYST:				
Catalyst			180.00	1.64
Subtotal Variable Costs			7076.19	64.33
FIXED OPERATING COSTS:				
Salaries & Overhead			10.70	0.10
Other Expense				0.00
Unit Total Consumption			23.00	0.21
Enterprise Total Consumption			9.00	0.08
MAINTENANCE:			550.00	5.00
Grand Total Costs			7668.89	69.72

FIER NITROGEN FERTILIZER PLANT

Ammonia in Unit 211 (Train 2)
Capacity 100%
Natural gas at 5500 Leks/1000 m^3

COST ITEM:	Unit Usage	Cost-Leks	Leks/mt	US $
Process Gas m^3/mt	730.00	5500.00	4015.00	36.50
Reformer Fuel Gas m^3/mt	350.00	5500.00	1925.00	17.50
Subtotal	1080.00		5940.00	54.00
MMBtu/mt	30.59			
UTILITIES:				
Electricity kWh/mt	950.00	1.80	1710.00	15.55
Steam m^3/mt	0.85	1250.00	1062.50	9.66
Boiler Feed Water m^3/mt	3.67	203.00	745.01	6.77
Ind. Water m^3/mt	13.50	2.26	30.51	0.28
CHEMICALS:				
Potassium Carbonate kg/mt	0.19	5.90	1.12	0.01
Amino Acedic Acid kg/mt	0.22	51.00	11.22	0.10
Vanadium Pentoxide kg/mt	0.02	80.00	1.60	0.01
Trisodium Phosphate kg/mt	0.00	3.00	0.00	0.00
Activated Carbon kg/mt	0.06	29.00	1.74	0.02
Salt kg/mt	26.40	3.50	92.40	0.84
CATALYST:				
Catalyst			180.00	1.64
Subtotal Variable Costs			9776.10	88.87
FIXED OPERATING COSTS:				
Salaries & Overhead			10.70	0.10
Other Expense				0.00
Unit Total Consumption			23.00	0.21
Enterprise Total Consumption			9.00	0.08
MAINTENANCE:			550.00	5.00
Grand Total Costs			10368.80	94.26

FIER NITROGEN FERTILIZER PLANT

Ammonia in Unit 211 (Train 2)
Capacity 100%
Natural gas at 8000 Leks/1000 m^3

COST ITEM:	Unit Usage	Cost-Leks	Leks/mt	US $
Process Gas m^3/mt	730.00	8000.00	5840.00	53.09
Reformer Fuel Gas m^3/mt	350.00	8000.00	2800.00	25.45
Subtotal	1080.00		8640.00	78.55
MMBtu/mt	30.59			
UTILITIES:				
Electricity kWh/mt	950.00	1.80	1710.00	15.55
Steam m^3/mt	0.85	1250.00	1062.50	9.66
Boiler Feed Water m^3/mt	3.67	203.00	745.01	6.77
Ind. Water m^3/mt	13.50	2.26	30.51	0.28
CHEMICALS:				
Potassium Carbonate kg/mt	0.19	5.90	1.12	0.01
Amino Acedic Acid kg/mt	0.22	51.00	11.22	0.10
Vanadium Pentoxide kg/mt	0.02	80.00	1.60	0.01
Trisodium Phosphate kg/mt	0.03	3.00	0.09	0.00
Activated Carbon kg/mt	0.06	29.00	1.74	0.02
Salt kg/mt	26.40	3.50	92.40	0.84
CATALYST:				
Catalyst			180.00	1.64
Subtotal Variable Costs			12476.19	113.42
FIXED OPERATING COSTS:				
Salaries & Overhead			10.70	0.10
Other Expense				0.00
Unit Total Consumption			23.00	0.21
Enterprise Total Consumption			9.00	0.08
MAINTENANCE:			550.00	5.00
Grand Total Costs			13068.89	118.81

FIER NITROGEN FERTILIZER PLANT

Ammonia in Unit 212 (Train 3)
Capacity 100%
Natural gas at 3000 Leks/1000 m^3

COST ITEM:	Unit Usage	Cost-Leks	Leks/mt	US $
Process Gas m^3/mt	700.00	3000.00	2100.00	19.09
Reformer Fuel Gas m^3/mt	350.00	3000.00	1050.00	9.55
Subtotal	1050.00		3150.00	28.64
MMBtu/mt	29.74			
UTILITIES:				
Electricity kWh/mt	890.00	1.80	1602.00	14.56
Steam m^3/mt	0.85	1250.00	1062.50	9.66
Boiler Feed Water m^3/mt	2.80	203.00	568.40	5.17
Ind. Water m^3/mt	10.00	2.26	22.60	0.21
CHEMICALS:				
Potassium Carbonate kg/mt	0.19	5.90	1.12	0.01
Amino Acedic Acid kg/mt	0.22	51.00	11.22	0.10
Vanadium Pentoxide kg/mt	0.02	80.00	1.60	0.01
Trisodium Phosphate kg/mt	0.03	3.00	0.09	0.00
Activated Carbon kg/mt	0.06	29.00	1.74	0.02
Salt kg/mt	26.40	3.50	92.40	0.84
CATALYST:				
Catalyst			180.00	1.64
Subtotal Variable Costs			6693.67	60.85
FIXED OPERATING COSTS:				
Salaries & Overhead			10.70	0.10
Other Expense				0.00
Unit Total Consumption			23.00	0.21
Enterprise Total Consumption			9.00	0.08
MAINTENANCE:			550.00	5.00
Grand Total Costs			7286.37	66.24

FIER NITROGEN FERTILIZER PLANT

Ammonia in Unit 212 (Train 3)
Capacity 100%
Natural gas at 5500 Leks/1000 m^3

COST ITEM:	Unit Usage	Cost-Leks	Leks/mt	US $
Process Gas m^3/mt	700.00	5500.00	3850.00	35.00
Reformer Fuel Gas m^3/mt	350.00	5500.00	1925.00	17.50
Subtotal	1050.00		5775.00	52.50
MMBtu/mt	29.74			
UTILITIES:				
Electricity kWh/mt	890.00	1.80	1602.00	14.56
Steam m^3/mt	0.85	1250.00	1062.50	9.66
Boiler Feed Water m^3/mt	2.80	203.00	568.40	5.17
Ind. Water m^3/mt	10.00	2.26	22.60	0.21
CHEMICALS:				
Potassium Carbonate kg/mt	0.19	5.90	1.12	0.01
Amino Acedic Acid kg/mt	0.22	51.00	11.22	0.10
Vanadium Pentoxide kg/mt	0.02	80.00	1.60	0.01
Trisodium Phosphate kg/mt	0.03	3.00	0.09	0.00
Activated Carbon kg/mt	0.06	29.00	1.74	0.02
Salt kg/mt	26.40	3.50	92.40	0.84
CATALYST:				
Catalyst			180.00	1.64
Subtotal Variable Costs			9318.67	84.72
FIXED OPERATING COSTS:				
Salaries & Overhead			10.70	0.10
Other Expense				0.00
Unit Total Consumption			23.00	0.21
Enterprise Total Consumption			9.00	0.08
MAINTENANCE:			550.00	5.00
Grand Total Costs			9911.37	90.10

FIER NITROGEN FERTILIZER PLANT

Ammonia in Unit 212 (Train 3)
Capacity 100%
Natural gas at 8000 Leks/1000 m^3

COST ITEM:	Unit Usage	Cost-Leks	Leks/mt	US $
Process Gas m^3/mt	700.00	8000.00	5600.00	50.91
Reformer Fuel Gas m^3/mt	350.00	8000.00	2800.00	25.45
Subtotal	1050.00		8400.00	76.36
MMBtu/mt	29.74			
UTILITIES:				
Electricity kWh/mt	890.00	1.80	1602.00	14.56
Steam m^3/mt	0.85	1250.00	1062.50	9.66
Boiler Feed Water m^3/mt	2.80	203.00	568.40	5.17
Ind. Water m^3/mt	10.00	2.26	22.60	0.21
CHEMICALS:				
Potassium Carbonate kg/mt	0.19	5.90	1.12	0.01
Amino Acedic Acid kg/mt	0.22	51.00	11.22	0.10
Vanadium Pentoxide kg/mt	0.02	80.00	1.60	0.01
Trisodium Phosphate kg/mt	0.03	3.00	0.09	0.00
Activated Carbon kg/mt	0.06	29.00	1.74	0.02
Salt kg/mt	26.40	3.50	92.40	0.84
CATALYST:				
Catalyst			180.00	1.64
Subtotal Variable Costs			11943.67	108.58
FIXED OPERATING COSTS:				
Salaries & Overhead			10.70	0.10
Other Expense				0.00
Unit Total Consumption			23.00	0.21
Enterprise Total Consumption			9.00	0.08
MAINTENANCE:			550.00	5.00
Grand Total Costs			12536.37	113.97

FIER NITROGEN FERTILIZER PLANT

Urea in Unit 211 (Train 2) (NH_3 from Unit 210, Train 1))
Capacity 100%
Gasoline at 17.75 Leks/L

RAW MATERIAL CONSUMPTION:	Unit Usage	Cost-Leks	Leks/mt	US $
Ammonia mt/mt	0.60	31781.67	19196.13	174.51
UTILITIES:				
Electricity kWh/mt	181.30	1.80	326.34	2.97
Steam m^3/mt	1.12	1250.00	1400.00	12.73
Boiler Feed Water m^3/mt	0.26	203.00	52.78	0.48
Ind. Water m^3/mt	10.26	2.26	23.19	0.21
CHEMICALS:				
Salt kg/mt	15.00	3.50	52.50	0.48
Subtotal Variable Costs			21050.94	191.37
FIXED OPERATING COSTS:				
Salaries & Overhead			6.70	0.06
Other Expense				0.00
Unit Total Consumption			6.00	0.05
Enterprise Total Consumption			3.00	0.03
MAINTENANCE:			330.00	3.00
Grand Total Costs			21396.64	194.51

FIER NITROGEN FERTILIZER PLANT

Urea in Unit 211 (Train 2) (NH_3 from Unit 211, Train 2)
Capacity 100%
Natural gas at 8000 Leks/1000 m^3

RAW MATERIAL CONSUMPTION:	Unit Usage	Cost-Leks	Leks/mt	US $
Ammonia mt/mt	0.60	13068.89	7893.61	71.76
UTILITIES:				
Electricity kWh/mt	181.30	1.80	326.34	2.97
Steam m^3/mt	1.12	1250.00	1400.00	12.73
Boiler Feed Water m^3/mt	0.26	203.00	52.78	0.48
Ind. Water m^3/mt	10.26	2.26	23.19	0.21
CHEMICALS:				
Salt kg/mt	15.00	3.50	52.50	0.48
Subtotal Variable Costs			9748.42	88.62
FIXED OPERATING COSTS:				
Salaries & Overhead			6.70	0.06
Other Expense				0.00
Unit Total Consumption			6.00	0.05
Enterprise Total Consumption			3.00	0.03
MAINTENANCE:			330.00	3.00
Grand Total Costs			10094.12	91.76

FIER NITROGEN FERTILIZER PLANT

Urea in Unit 212 (Train 2) (NH_3 from Unit 210, Train 1)
Capacity 100%
Gasoline at 17.75 Leks/L

RAW MATERIAL CONSUMPTION:	Unit Usage	Cost-Leks	Leks/mt	US $
Ammonia mt/mt	0.60	31781.67	19196.13	174.51
UTILITIES:				
Electricity kWh/mt	181.30	1.80	326.34	2.97
Steam m^3/mt	1.12	1250.00	1400.00	12.73
Boiler Feed Water m^3/mt	0.26	203.00	52.78	0.48
Ind. Water m^3/mt	10.26	2.26	23.19	0.21
CHEMICALS:				
Salt kg/mt	15.00	3.50	52.50	0.48
Subtotal Variable Costs			21050.94	191.37
FIXED OPERATING COSTS:				
Salaries & Overhead			6.70	0.06
Other Expense				0.00
Unit Total Consumption			6.00	0.05
Enterprise Total Consumption			3.00	0.03
MAINTENANCE:			330.00	3.00
Grand Total Costs			21396.64	194.51

FIER NITROGEN FERTILIZER PLANT

Urea in Unit 211 (Train 2) (NH_3 from Unit 211, Train 2))
Capacity 100%
Natural Gas at 5,500 Leks/1000 m^3

RAW MATERIAL CONSUMPTION:	Unit Usage	Cost-Leks	Leks/mt	US $
Ammonia mt/mt	0.60	10368.80	6262.76	56.93
UTILITIES:				
Electricity kWh/mt	181.30	1.80	326.34	2.97
Steam m^3/mt	1.12	1250.00	1400.00	12.73
Boiler Feed Water m^3/mt	0.26	203.00	52.78	0.48
Ind. Water m^3/mt	10.26	2.26	23.19	0.21
CHEMICALS:				
Salt kg/mt	15.00	3.50	52.50	0.48
Subtotal Variable Costs			8117.56	73.80
FIXED OPERATING COSTS:				
Salaries & Overhead			6.70	0.06
Other Expense				0.00
Unit Total Consumption			6.00	0.05
Enterprise Total Consumption			3.00	0.03
MAINTENANCE:			330.00	3.00
Grand Total Costs			8463.26	76.94

FIER NITROGEN FERTILIZER PLANT

Urea in Unit 212 (Train 3) (NH_3 from Unit 212, Train 3)
Capacity 100%
Natural gas at 5500 Leks/1000 m^3

RAW MATERIAL CONSUMPTION:	Unit Usage	Cost-Leks	Leks/mt	US $
Ammonia mt/mt	0.60	9911.37	5986.47	54.42
UTILITIES:				
Electricity kWh/mt	181.30	1.80	326.34	2.97
Steam m^3/mt	1.12	1250.00	1400.00	12.73
Boiler Feed Water m^3/mt	0.26	203.00	52.78	0.48
Ind. Water m^3/mt	10.26	2.26	23.19	0.21
CHEMICALS:				
Salt kg/mt	15.00	3.50	52.50	0.48
Subtotal Variable Costs			7841.28	71.28
FIXED OPERATING COSTS:				
Salaries & Overhead			6.70	0.06
Other Expense				0.00
Unit Total Consumption			6.00	0.05
Enterprise Total Consumption			3.00	0.03
MAINTENANCE:			330.00	3.00
Grand Total Costs			8186.98	74.43

174

FIER NITROGEN FERTILIZER PLANT

Urea in Unit 212 (Train 3) (NH_3 from Unit 212, Train 3))
Capacity 100%
Natural gas at 8000 Leks/1000 m^3

RAW MATERIAL CONSUMPTION:	Unit Usage	Cost-Leks	Leks/mt	US $
Ammonia mt/mt	0.60	12536.37	7571.97	68.84
UTILITIES:				
Electricity kWh/mt	181.30	1.80	326.34	2.97
Steam m^3/mt	1.12	1250.00	1400.00	12.73
Boiler Feed Water m^3/mt	0.26	203.00	52.78	0.48
Ind. Water m^3/mt	10.26	2.26	23.19	0.21
CHEMICALS:				
Salt kg/mt	15.00	3.50	52.50	0.48
Subtotal Variable Costs			9426.78	85.70
FIXED OPERATING COSTS:				
Salaries & Overhead			6.70	0.06
Other Expense				0.00
Unit Total Consumption			6.00	0.05
Enterprise Total Consumption			3.00	0.03
MAINTENANCE:			330.00	3.00
Grand Total Costs			9772.48	88.84

FIER NITROGEN FERTILIZER PLANT

HNO_3 in Unit 210 (Train 1) (NH_3 from Unit 210, Train 1)
Capacity 100%
Gasoline at 24 Leks/L

RAW MATERIAL CONSUMPTION:	Unit Usage	Cost-Leks	Leks/mt	US $
Ammonia mt/mt	0.30	39741.58	11842.99	107.66
UTILITIES:				
Electricity kWh/mt	71.00	1.80	127.80	1.16
Steam m^3/mt	0.01	1250.00	12.50	0.11
Boiler Feed Water m^3/mt	0.33	203.00	66.99	0.61
Ind. Water m^3/mt	8.45	2.26	19.10	0.17
Platinum gr/mt	0.13	200.00	26.00	0.24
CHEMICALS:				
Salt kg/mt	14.40	3.50	50.40	0.46
Subtotal Variable Costs			12145.78	110.42
FIXED OPERATING COSTS:				
Salaries & Overhead			1.80	0.02
Other Expenses				0.00
Unit Total Consumption			2.00	0.02
Enterprise Total Consumption			1.00	0.01
MAINTENANCE:			440.00	4.00
Grand Total Costs			12590.58	114.46

FIER NITROGEN FERTILIZER PLANT

HNO_3 in Unit 210 (Train 1) (NH_3 from Unit 210, Train 1)
Capacity 100%
Gasoline at 17.75 Leks/L

RAW MATERIAL CONSUMPTION:	Unit Usage	Cost-Leks	Leks/mt	US $
Ammonia mt/mt	0.30	31781.67	9470.94	86.10
UTILITIES:				
Electricity kWh/mt	71.00	1.80	127.80	1.16
Steam m^3/mt	0.01	1250.00	12.50	0.11
Boiler Feed Water m^3/mt	0.33	203.00	66.99	0.61
Ind. Water m^3/mt	8.45	2.26	19.10	0.17
Platinum gr/mt	0.13	200.00	26.00	0.24
CHEMICALS:				
Salt kg/mt	14.40	3.50	50.40	0.46
Subtotal Variable Costs			9773.72	88.85
FIXED OPERATING COSTS:				
Salaries & Overhead			1.80	0.02
Other Expenses				0.00
Unit Total Consumption			2.00	0.02
Enterprise Total Consumption			1.00	0.01
MAINTENANCE:			440.00	4.00
Grand Total Costs			10218.52	92.90

FIER NITROGEN FERTILIZER PLANT

HNO_3 in Unit 210 (Train 1) (NH_3 from Unit 211, Train 2)
Capacity 100%
Natural gas at 5500 Leks/1000 m^3

RAW MATERIAL CONSUMPTION:	Unit Usage	Cost-Leks	Leks/mt	US $
Ammonia mt/mt	0.30	10368.80	3089.90	28.09
UTILITIES:				
Electricity kWh/mt	71.00	1.80	127.80	1.16
Steam m^3/mt	0.01	1250.00	12.50	0.11
Boiler Feed Water m^3/mt	0.33	203.00	66.99	0.61
Ind. Water m^3/mt	8.45	2.26	19.10	0.17
Platinum gr/mt	0.13	200.00	26.00	0.24
CHEMICALS:				
Salt kg/mt	14.40	3.50	50.40	0.46
Subtotal Variable Costs			3392.69	30.84
FIXED OPERATING COSTS:				
Salaries & Overhead			1.80	0.02
Other Expenses				0.00
Unit Total Consumption			25.00	0.23
Enterprise Total Consumption			1.00	0.01
MAINTENANCE:			440.00	4.00
Grand Total Costs			3860.49	35.10

FIER NITROGEN FERTILIZER PLANT

HNO_3 in Unit 210 (Train 1) (NH_3 from Unit 211, Train 2)
Capacity 100%
Natural gas at 8000 Leks/1000 m^3

RAW MATERIAL CONSUMPTION:	Unit Usage	Cost-Leks	Leks/mt	US $
Ammonia mt/mt	0.30	13068.89	3894.53	35.40
UTILITIES:				
Electricity kWh/mt	71.00	1.80	127.80	1.16
Steam m^3/mt	0.01	1250.00	12.50	0.11
Boiler Feed Water m^3/mt	0.33	203.00	66.99	0.61
Ind. Water m^3/mt	8.45	2.26	19.10	0.17
Platinum gr/mt	0.13	200.00	26.00	0.24
CHEMICALS:				
Salt kg/mt	14.40	3.50	50.40	0.46
Subtotal Variable Costs			4197.32	38.16
FIXED OPERATING COSTS:				
Salaries & Overhead			1.80	0.02
Other Expenses				0.00
Unit Total Consumption			2.00	0.02
Enterprise Total Consumption			1.00	0.01
MAINTENANCE:			440.00	4.00
Grand Total Costs			4642.12	42.20

FIER NITROGEN FERTILIZER PLANT

HNO_3 in Unit 210 (Train 1) (NH_3 from Unit 210, Train 1)
Capacity 100%
Natural gas at 5500 Leks/1000 m^3

RAW MATERIAL CONSUMPTION:	Unit Usage	Cost-Leks	Leks/mt	US $
Ammonia mt/mt	0.30	10830.43	3227.47	29.34
UTILITIES:				
Electricity kWh/mt	71.00	1.80	127.80	1.16
Steam m^3/mt	0.01	1250.00	12.50	0.11
Boiler Feed Water m^3/mt	0.33	203.00	66.99	0.61
Ind. Water m^3/mt	8.45	2.26	19.10	0.17
Platinum gr/mt	0.13	200.00	26.00	0.24
CHEMICALS:				
Salt kg/mt	14.40	3.50	50.40	0.46
Subtotal Variable Costs			3530.26	32.09
FIXED OPERATING COSTS:				
Salaries & Overhead			1.80	0.02
Other Expenses				0.00
Unit Total Consumption			2.00	0.02
Enterprise Total Consumption			1.00	0.01
MAINTENANCE:			440.00	4.00
Grand Total Costs			3975.06	36.14

FIER NITROGEN FERTILIZER PLANT

HNO_3 in Unit 210 (Train 1) (NH_3 from Unit 212, Train 3))
Capacity 100%
Natural gas at 5500 Leks/1000 m^3

RAW MATERIAL CONSUMPTION:	Unit Usage	Cost-Leks	Leks/mt	US $
Ammonia mt/mt	0.30	9911.37	2953.59	26.85
UTILITIES:				
Electricity kWh/mt	71.00	1.80	127.80	1.16
Steam m^3/mt	0.01	1250.00	12.50	0.11
Boiler Feed Water m^3/mt	0.33	203.00	66.99	0.61
Ind. Water m^3/mt	8.45	2.26	19.10	0.17
Platinum gr/mt	0.13	200.00	26.00	0.24
CHEMICALS:				
Salt kg/mt	14.40	3.50	50.40	0.46
Subtotal Variable Costs			3256.38	29.60
FIXED OPERATING COSTS:				
Salaries & Overhead			1.80	0.02
Other Expenses				0.00
Unit Total Consumption			2.00	0.02
Enterprise Total Consumption			1.00	0.01
MAINTENANCE:			440.00	4.00
Grand Total Costs			3701.18	33.65

FIER NITROGEN FERTILIZER PLANT

AN in Unit 210 (Train 1) (NH_3 from Unit 210, Train 1)
Capacity 100%
Gasoline at 24 Leks/L

RAW MATERIAL CONSUMPTION:	Unit Usage	Cost-Leks	Leks/mt	US $
Ammonia mt/mt	0.22	39741.58	8822.63	80.21
Nitric Acid mt/mt	0.78	12590.58	9833.24	89.39
UTILITIES:				
Electricity kWh/mt	30.30	1.80	54.54	0.50
Steam m^3/mt	0.46	1250.00	575.00	5.23
Boiler Feed Water m^3/mt	0.06	203.00	12.18	0.11
Ind. Water m^3/mt	1.45	2.26	3.28	0.03
Platinum gr/mt	0.00	200.00	0.00	0.00
CHEMICALS:				
Salt kg/mt	3.30	3.50	11.55	0.11
Subtotal Variable Costs			19312.42	175.57
FIXED OPERATING COSTS:				
Salaries & Overhead			5.30	0.05
Other Expense				0.00
Unit Total Consumption			2.00	0.02
Enterprise Total Consumption			1.00	0.01
MAINTENANCE:			330.00	3.00
Grand Total Costs			19650.72	178.64

FIER NITROGEN FERTILIZER PLANT

AN in Unit 210 (Train 1) (NH_3 from Unit 210, Train 1)
Capacity 100%
Gasoline at 17.75 Leks/L

RAW MATERIAL CONSUMPTION:	Unit Usage	Cost-Leks	Leks/mt	US $
Ammonia mt/mt	0.22	31781.67	7055.53	64.14
Nitric Acid mt/mt	0.78	10218.52	7980.67	72.55
UTILITIES:				
Electricity kWh/mt	30.30	1.80	54.54	0.50
Steam m^3/mt	0.46	1250.00	575.00	5.23
Boiler Feed Water m^3/mt	0.06	203.00	12.18	0.11
Ind. Water m^3/mt	1.45	2.26	3.28	0.03
Platinum gr/mt	0.00	200.00	0.00	0.00
CHEMICALS:				
Salt kg/mt	3.30	3.50	11.55	0.11
Subtotal Variable Costs			15692.75	142.66
FIXED OPERATING COSTS:				
Salaries & Overhead			5.30	0.05
Other Expense				0.00
Unit Total Consumption			2.00	0.02
Enterprise Total Consumption			1.00	0.01
MAINTENANCE:			330.00	3.00
Grand Total Costs			15701.05	142.74

FIER NITROGEN FERTILIZER PLANT

AN in Unit 210 (Train 1) (NH_3 from Unit 211, Train 2)
Capacity 100%
Natural gas at 5500 Leks/1000 m^3

RAW MATERIAL CONSUMPTION:	Unit Usage	Cost-Leks	Leks/mt	US $
Ammonia mt/mt	0.22	10368.80	2301.87	20.93
Nitric Acid mt/mt	0.78	3860.49	3015.04	27.41
UTILITIES:				
Electricity kWh/mt	30.30	1.80	54.54	0.50
Steam m^3/mt	0.46	1250.00	575.00	5.23
Boiler Feed Water m^3/mt	0.06	203.00	12.18	0.11
Ind. Water m^3/mt	1.45	2.26	3.28	0.03
Platinum gr/mt	0.00	200.00	0.00	0.00
CHEMICALS:				
Salt kg/mt	3.30	3.50	11.55	0.11
Subtotal Variable Costs			5973.46	54.30
FIXED OPERATING COSTS:				
Salaries & Overhead			5.30	0.05
Other Expense				0.00
Unit Total Consumption			2.00	0.02
Enterprise Total Consumption			1.00	0.01
MAINTENANCE:			330.00	3.00
Grand Total Costs			6311.76	57.38

FIER NITROGEN FERTILIZER PLANT

AN in Unit 210 (Train 1) (NH_3 from Unit 211, Train 2)
Capacity 100%
Natural gas at 8000 Leks/1000 m^3

RAW MATERIAL CONSUMPTION:	Unit Usage	Cost-Leks	Leks/mt	US $
Ammonia mt/mt	0.22	13068.89	2901.29	26.38
Nitric Acid mt/mt	0.78	4642.12	3625.49	32.96
UTILITIES:				
Electricity kWh/mt	30.30	1.80	54.54	0.50
Steam m^3/mt	0.46	1250.00	575.00	5.23
Boiler Feed Water m^3/mt	0.06	203.00	12.18	0.11
Ind. Water m^3/mt	1.45	2.26	3.28	0.03
Platinum gr/mt	0.00	200.00	0.00	0.00
CHEMICALS:				
Salt kg/mt	3.30	3.50	11.55	0.11
Subtotal Variable Costs			7183.33	65.30
FIXED OPERATING COSTS:				
Salaries & Overhead			5.30	0.05
Other Expense				0.00
Unit Total Consumption			2.00	0.02
Enterprise Total Consumption			1.00	0.01
MAINTENANCE:			330.00	3.00
Grand Total Costs			7521.63	68.38

FIER NITROGEN FERTILIZER PLANT

AN in Unit 210 (Train 1) (NH_3 from Unit 210, Train 1)
Capacity 100%
Natural gas at 5500 Leks/1000 m^3

RAW MATERIAL CONSUMPTION:	Unit Usage	Cost-Leks	Leks/mt	US $
Ammonia mt/mt	0.22	10830.43	2404.36	21.86
Nitric Acid mt/mt	0.78	3975.06	3104.52	28.22
UTILITIES:				
Electricity kWh/mt	30.30	1.80	54.54	0.50
Steam m^3/mt	0.46	1250.00	575.00	5.23
Boiler Feed Water m^3/mt	0.06	203.00	12.18	0.11
Ind. Water m^3/mt	1.45	2.26	3.28	0.03
Platinum gr/mt	0.00	200.00	0.00	0.00
CHEMICALS:				
Salt kg/mt	3.30	3.50	11.55	0.11
Subtotal Variable Costs			6165.42	56.05
FIXED OPERATING COSTS:				
Salaries & Overhead			5.30	0.05
Other Expense				0.00
Unit Total Consumption			2.00	0.02
Enterprise Total Consumption			1.00	0.01
MAINTENANCE:			330.00	3.00
Grand Total Costs			6503.72	59.12

FIER NITROGEN FERTILIZER PLANT

AN in Unit 210 (Train 1) (NH_3 from Unit 212, Train 3))
Capacity 100%
Natural gas at 5500 Leks/1000 m^3

RAW MATERIAL CONSUMPTION:	Unit Usage	Cost-Leks	Leks/mt	US $
Ammonia mt/mt	0.22	9911.37	2200.32	20.00
Nitric Acid mt/mt	0.78	3701.18	2890.62	26.28
UTILITIES:				
Electricity kWh/mt	30.30	1.80	54.54	0.50
Steam m^3/mt	0.46	1250.00	575.00	5.23
Boiler Feed Water m^3/mt	0.06	203.00	12.18	0.11
Ind. Water m^3/mt	1.45	2.26	3.28	0.03
Platinum gr/mt	0.00	200.00	0.00	0.00
CHEMICALS:				
Salt kg/mt	3.30	3.50	11.55	0.11
Subtotal Variable Costs			5747.49	52.25
FIXED OPERATING COSTS:				
Salaries & Overhead			5.30	0.05
Other Expense				0.00
Unit Total Consumption			2.00	0.02
Enterprise Total Consumption			1.00	0.01
MAINTENANCE:			330.00	3.00
Grand Total Costs			6085.79	55.33

COMPARISON OF UREA PRODUCTION COSTS
ALBANIA VERSUS U.S.A.

Item	5500 Leks		U.S.A.	
	Unit 211 Train 2	Unit 212 Train 3	Under 1,000 mt/d	Over 1,000 mt/d
			(Note #1)	(Note #2)
NATURAL GAS COSTS: $/MMBtu	$1.42	$1.42	$1.42	$1.42
UREA COSTS:				
Ammonia Costs	$56.93	$54.42	$51.34	$38.00
Other Cash Costs	$20.01	$20.01	$25.00	$25.00
	$76.94	$74.43	$76.34	$63.00

Note #1 Urea costs based on ammonia produced in plants under 1000 mt/d.
Note #2 Urea costs based on ammonia produced in world-scale plants.

COMPARISON OF UREA PRODUCTION COSTS
ALBANIA VERSUS U.S.A.

Item	5500 Leks		U.S.A.	
	Unit 211 Train 2	Unit 212 Train 3	Under 1,000 mt/d	Over 1,000 mt/d
NATURAL GAS COSTS:				
$/MMBtu	$1.42	$1.42	$1.42	$1.42
AMMONIA COSTS:				
Raw Material Costs	$54.00	$52.00	$47.49	$49.00
Other Cash Costs	$40.26	$37.60	$41.04	$17.00
	$94.26	$89.60	$88.53	$66.00
UREA COSTS:				
Ammonia Costs	$56.93	$54.42	$51.34	$38.00
Other Cash Costs	$20.01	$20.01	$25.00	$25.00
	$76.94	$74.43	$76.34	$63.00

Note #1 Urea costs based on ammonia produced in plants under 1000 mt/d.
Note #2 Urea costs based on ammonia produced in world-scale plants.

Appendix E

Truck Modification

Appendix E-1

ACTIVITY REPORT

TRANSMISSION OK

TRANSACTION #	1127
CONNECTION TEL	355 42 34734
CONNECTION ID	G3
START TIME	02/26 15:55
USAGE TIME	00'51
PAGES	1

**********TELEFAX COMMUNICATION**********

February 26, 1993 No. A-7

To: Dr. Ray Diamond
IFDC
The Enteprise of Administrative and
Public Services Building, 3rd Floor
Tirana, Albania

Fax 34734

From: Alan Nix

Page 1 of 1

MESSAGE:
Dear Ray:

Please pass the following message to Jorge Polo.

Navistar referred us to some U.S. tank manufacturers for details about retrofitting the trucks to haul gasoline.

The tank manufacturers contacted generally agree that it will be possible to retrofit the flatbed trucks to haul gasoline. The trucks should be able to accommodate a tank that will haul 2,500-3,000 gallons. A 2,500 gallon steel tank will cost approximately $18,000. A 3,000 gallon aluminum tank will cost approximately $25,000. The quotes are for single compartment (possible to haul only one material) tanks with a single door for meter and hose storage, f.o.b. Spartanburg, South Carolina. The tanks would meet all U.S. Department of Transportation requirements (safety and otherwise). These estimates do not include the cost of modifying the truck frame to accept the tank. I may have some estimates on workhours required for this early next week. I will send any other details to you as soon as I receive them.

I hope that this information is helpful to you.

Regards,
Alan Nix
Alan Nix
IFDC

TAN/dbk
Account Number: 3-20-31-070
Distribution: JJS, AHR, DSS, ORD RF, TAN, JRP

02 26 93 14:55 ☎205 351 7408 IFDC MS AL USA ☑001

ACTIVITY REPORT

TRANSMISSION OK

TRANSACTION =	1114
CONNECTION TEL	12147331210
CONNECTION ID	G3
START TIME	02/26 14:57
USAGE TIME	01'42
PAGES	2

DATE: February 26, 1993

TO: H. R. International
Fort Worth, Texas

FROM: Alan Nix

ATTENTION: Mr. Dave Hoffman

REFERENCE:

TELEFAX NO: 214 733 1210

PAGE 1 of 2

MESSAGE:

As requested, attached is a copy of specifications for the trucks that are to be retrofitted to gasoline tankers in Albania. Please quote both steel and aluminum tanks with a volume of 2,000-2,500 gallons. What is the maximum size tank these trucks can carry? Please indicate cost for the largest tank.

Regards,

Alan Nix

Alan Nix

FEB 26 1993

3-20-31-070
TAN:efg
CC: TAN JJS RBD DBK JRP DSS ORD-RF

192

Navistar International
Transportation Corp.

455 North Cityfront Plaza Drive
Chicago Illinois 60611
Telephone 312 836-2000

Michael V Kleespies
Marketing Manager
International Operations

NAVISTAR.

April 9, 1992

Mr. Jim M. Kelly
IFDC, Purchasing Manager

International Truck Model 4900 4x2 with the following specifications.

Quantity = 20 units
Front Axle= 12,000 lbs.
Rear Axle= 23,000 lbs.
Max. GVW = 35,000 lbs.
Engine= International DT-466 210 hp @ 2400 RPM
Brakes= Full Air

Chassis	Engine	W.B.	Body	Trans Speeds	Tire Size	Axle Ratio
NH430870	000635129	206"	16'3"	7	11R22.5	5.38
NH433963	000640342	206"	16'3"	7	11R22.5	5.38
NH434462	000638030	206"	16'3"	7	11R22.5	6.14
NH432116	000625411	206"	16'3"	7	11R22.5	6.14
NH435911	000640468	206"	16'3"	7	11R22.5	6.14
NH418748	000637198	206"	16'3"	5	11R22.5	4.56/6.22
NH431373	000642531	206"	16'3"	5	11R22.5	4.56/6.22
NH435387	000640346	206"	16'3"	5	11R22.5	4.56/6.22
NH403280	000630706	206"	16'3"	5	11R22.5	4.89/6.66
NH431480	000641545	206"	16'3"	5	11R22.5	4.89/6.66
NH411655	000635019	206"	16'3"	5	11R22.5	4.89/6.66
MH388188	000626008	206"	16'3"	5	11R22.5	4.89/6.66
MH385925	000624503	206"	16'3"	5	11R22.5	4.89/6.66
NH418764	000637135	194"	14'3"	6	1100X20	5.38
NH418765	000635693	194"	14'3"	6	1100X20	5.38
NH418766	000636947	194"	14'3"	6	1100X20	5.38
NH418791	000636829	188"	14'3"	7	11R22.5	6.14
NH433684	000641820	188"	14'3"	7	11R22.5	6.14
NH413425	000625411	188"	14'3"	7	11R22.5	6.14
NH407637	000633212	188"	14'3"	5	1100X20	4.89/6.66

TOTAL=20 units (13 units with 16'3" bodies, 7 units with 14'3" bodies)

BODY SPECIFICATIONS: Platform Stake Body 16'3" and 14'3" w/Mud flaps
96 inches wide, 40 inches sides
Steel Stakes, metal slats, & Wood floor

Price per unit F.A.S. port of New Orleans $ 43,650.00

Total sale price per 20 units. $ 873,000.00

Michael V. Kleespies

INTERNATIONAL

TO: Alan Nix

Int'l. Fertilizer Dev. Cntr.

FROM: HR INTERNATIONAL, INC.
16990 Dallas Parkway
Suite 202
DALLAS, TEXAS 75248-1903
U.S.A.
(214) 733-1180 Fax: (214) 733-1210

SUBJECT: 2500 USG petro truck tank retro-fit bodies DATE March 5, 199

Alan:

As mentioned in our fax no. F109/03/93 dated today (copy enclosed), we are herewith enclosing all original documents, plus Trailmaster & HRI brochures (two each), as promised, plus two business cards.

We hope to send you drawings shorthly.

Also, as is obvious from our brochure, we can supply you with any truck tank body/truck dump body or semi-trailer you may require.

REPLY TO DATE BY

Hence, we ask that you keep us in mind for any such future requirements.

Lastly, many thanks for your inquiry.

Sincerely,

RETURN PART 1 TO SENDER WITH REPLY BY Dave Hoffman

Dave Hoffman

HR INTERNATIONAL, INC.
16990 DALLAS PARKWAY, SUITE 202
DALLAS, TEXAS 75248-1903
U.S.A.

FACSIMILE TRANSMISSION

DATE: March 5, 1993

TO: Alan Nix
IFDC

FAX NUMBER: (205) 381-7408

FROM: David Hoffman

OUR FAX REF: F109/03/93

NUMBER OF PAGES INCLUDING THIS PAGE: 12

Ref: 2500 USG petro truck tank retro-fit.
Yr fax of 2/26/93.

NOTES:

Alan - per the above pls find attached:

-- Pro forma invoice no. 2578 (steel tank).

-- Specifications for this steel tank.

-- Pro forma invoice no. 2579 (aluminum tank).

-- Specifications for this aluminum tank.

The pro forma invoices state cost up to Port of Houston, TX. Shipping dimensions & weight are given at the bottom of each P/F invoice (for onward ocean

If there are any problems with this transmission, please notify us immediately.

Telephone (214) 733-1180 • Telex 6502611688 MCI (Via WUI) • Telefax (214) 733-1210

19

FACSIMILE TRANSMISSION

OUR FAX REF: F109/03/93

DATE: March 5, 1993

TO: Alan Nix

PAGE: 2 of 12

freight/insurance calculations).

As mentioned, Navistar estimates removal of the existing platform bodies at 4 man-hours/chassis.
We estimate installation of these tank bodies (after removal of the existing platform bodies) to encompass 22 man-hours/chassis. Adding 50% to this figure per installation overseas is advisable.

Drawings will be provided at a later date.

We are dispatching all original documentation (plus brochures) to you via Express Mail.

Many thanks for your inquiry.

Regards,

David Hoffman

David Hoffman

HR INTERNATIONAL, INC.
16990 DALLAS PARKWAY
SUITE 202
DALLAS, TEXAS 75248-1903
U.S.A.

Appendix E-7

PRO FORMA INVOICE

Telex: 6502611688 MCI (Via
Telephone: (214) 733-
Telefax: (214) 733-

DATE	OUR QUOTATION NUMBER	YOUR REFERENCE NUMBER	DATE
arch 5, 1993	Nº 2578	Albania Tank retro-fit	2/26/93 fax

CHARGE TO:

International Fertilizer Development Center
P.O. Box 2040
Muscle Schoals, Alabama 35662

SHIP TO:

DESCRIPTION		PER UNIT	7 UNITS TO
2500 U.S. GALLON STEEL PETROLEUM TRUCK TANK BODY			
BASE MODEL PRICE F.O.B. FACTORY	Ft. Worth, TX	$ 9,274	$ 64,918
EXPORT PACKAGING		$	$
INLAND FREIGHT/HANDLING/FORWARDING		$	$ 1,400
F.A.S. VESSEL	PORT OF Houston, TX	$	$ 66,318
EST. OCEAN FREIGHT	SUBJECT TO ACTUAL CHARGES AT TIME OF SHIPMENT	$	$ -
EST. INSURANCE		$	$
EST.	PORT OF	$	$

ESTIMATED DELIVERY: APPROXIMATELY 10 weeks ex-factory AFTER CONFIRMED ORDE

CREDIT APPROVAL, AND TECHNICAL DATE RECEIVED.

PLEASE REFER TO THE ATTACHED SHEET(S) FOR SPECIFICATIONS QUOTED ON THIS EQUIPMENT (ALSO REFER TO THE ATTACHED BROCHU AND/OR SALES DRAWING FOR OUR STANDARD SPECIFICATIONS).

THIS PRICE FIRM IF CONFIRMED ORDER AND COVERING IRREVOCABLE LETTER OF CREDIT OR CREDIT APPROVAL RECEIVED WITHIN 60 days

TERMS OF PAYMENT: CONFIRMED IRREVOCABLE LETTER OF CREDIT,

SPECIAL NOTES
Units designed for on-site field installation.

ESTIMATED SHIPPING DIMENSIONS/ unit
7' (LENGTH) x 8' (WIDTH) x 12' (HEIGHT)

EST. SHIPPING WEIGHT/ un
4,000 lbs.

U.S. CUSTOMERS ONLY: QUOTATION EXCLUDES ANY APPLICABLE FEDERAL, STATE, OR LOCAL TAXES WHICH SHALL BE PAID BY PURCHASER. SUBJECT TO INCOTERMS OF 1980.

BY Howard E. Hoffman

FORM NO. 102A

COUNTRY AND ORIGIN AND MANUFACTURE: UNITED STATES OF AMERICA

INTERNATIONAL FERTILIZER DEVELOPMENT CENTER

2500 U.S. GALLON STEEL

PETROLEUM TRUCK TANK BODY

SPECIFICATIONS

MAKE:	TRAILMASTER TANKS, INC. U.S.A.

GENERAL DESCRIPTION

CAPACITY:	2500 U.S. GALLONS ± 3% (9470 LITERS).
CONSTRUCTION:	STRAIGHT ELLIPTICAL.
WELDS:	W-1.
CODES:	U.S. MC306AL.
COMPARTMENTS:	ONE.
WORKING PRESSURE:	1 PSI, 7 PSI HYDROSTATIC TEST.
TEMPERATURE:	200° FAHRENHEIT MAXIMUM (93° CENTIGRADE).
COMMODITY(S):	GASOLINE/DIESEL.

BARREL ASSEMBLY

SHELL:	TOP: 10 GAUGE (3.42) MILD STEEL. BOTTOM: 3/16" (4.83) MILD STEEL.
BAFFLES:	TWO, 10 GAUGE (3.42) MILD STEEL.
RINGS:	NONE.
FRAME:	FULL LENGTH ANGLE.
SPILLDAM:	FULL LENGTH, DOUBLE LEG SEALED CHANNELS.
OVERTURNS:	WITH DAM AT EACH END, DRAIN THROUGH LADDER AT REAR.

2500 U.S. GALLON STEEL
PETROLEUM TRUCK TANK BODY
SPECIFICATIONS
PAGE 2

TANK FITTINGS AND PIPING

MANWAY/DOMES:	ONE 16" X 10" (406 X 254) P.A.F. MANWAY WITH OFFSET FILL.
VENTS:	MECHANICAL OPERATED VAC/PRESS IN CONJUNCTION WITH EMERGENCY VALVE.
VAPOR:	NONE.
CLEANOUTS:	USE DOMES.
SUMPS:	3" (76.2) STEEL, BOLTED FLANGE.
EMERGENCY VALVE:	ALLEGHENY 3" (76.2) STEEL MECHANICAL ELBOW EMERGENCY VALVE. OPERATOR DRIVERSIDE. REMOTE AT FRONT.
PIPING:	3" (76.2) SCHEDULE 10 STEEL PIPE TO REAR.
LINE VALVES:	3" (76.2) STEEL GATE VALVE.
GASKETS:	CORK/BUNA.
HOSE ADAPTORS:	ONE ALUMINUM 3" (76.2) WITH DUST CAP.
SCRUBBERS:	N/A.
GAUGES/OVERFILL:	NONE.

TANK ACCESSORIES

LADDER:	1" (25.4) STEEL PIPE WITH TREAD-GRIP RUNGS AND TOP PLATFORM.
WALKWAY:	NONE.

2500 U.S. GALLON STEEL
PETROLEUM TRUCK TANK BODY
SPECIFICATIONS
PAGE 3

HOSE CARRIER: TWO, 6" X 10' (152 X 3048) FULL LENGTH HOSE TUBES, ONE EACH SIDE WITH DOORS AT REAR. TWO 3" X 10' (76.2 X 3048) PRODUCT HOSES INCLUDED.

FENDERS: NONE.

MUDFLAPS: NONE.

CABINET: NONE.

TIRE CARRIER: NONE.

CHASSIS, RUNNING GEAR AND COUPLER

TRUCK FURNISHED BY CUSTOMER. TANK SHOULD BE MOUNTED ON CUSHION BOARDS, WITH AT LEAST TWO 3/8" (9.65) STEEL PLATES PER SIDE BOLTED TO TANK FRAME AND TRUCK FRAME (INCLUDED).

SERVICE LIGHTS AND WIRING

AIR/ELECTRICAL: 12 VOLT ENCLOSED VAPOR PROOF SYSTEM WITH REAR LIGHTS IN INDIVIDUAL LIGHT BOXES.

LIGHTS: BETTS; U.S. D.O.T. SPECIFICATION.

COATINGS

EXTERIOR PAINT: ONE COLOR ENAMEL.

INTERIOR LINING: NONE.

MISCELLANOUS

CALIBRATION THEORETICAL CHART IN 1/4" (6.35) INCREMENTS.

STRAPPING: ONE MARKER ROD 24" LONG WITH THREE DISCS PER COMPARTMENT.

2500 U.S. GALLON STEEL
PETROLEUM TRUCK TANK BODY
SPECIFICATIONS
PAGE 4

MANUAL:	ONE PARTS AND SERVICE MANUAL PER UNIT.
EST WEIGHT:	4000 LBS. (1815 KGS.).
DIMENSIONS:	7' X 8' X 12' (2134 X 2438 X 3658). SHIPPING DIMENSIONS.
NOTES:	Unless specified otherwise, all dimensions in parenthesis are millimeters.

HR INTERNATIONAL, INC.
16990 DALLAS PARKWAY
SUITE 202
DALLAS, TEXAS 75248-1903
U.S.A.

Appendix E-

PRO FORMA INVOICE

Telex: 6502611688 MCI
Telephone: (214
Telefax: (214

DATE	OUR QUOTATION NUMBER	YOUR REFERENCE NUMBER	DATE
March 5, 1993	№ 2579	Albania Tank retro-fit	2/26/93 fa

CHARGE TO:

SHIP TO:

International Fertilizer Development Center
P.O. Box 2040
Muscle, Shoals, Alabama 35662

DESCRIPTION		PER UNIT	7 UNITS
2500 U.S. GALLON ALUMINUM PETROLEUM TRUCK TANK BODY			
BASE MODEL PRICE F.O.B. FACTORY	Ft. Worth, TX	$ 10,326	$ 72,282
EXPORT PACKAGING		$	$
INLAND FREIGHT/HANDLING/FORWARDING		$	$ 1,400
F.A.S. VESSEL	PORT OF Houston, TX	$	$ 73,682
EST. OCEAN FREIGHT	SUBJECT TO ACTUAL CHARGES AT TIME OF SHIPMENT	$	$
EST. INSURANCE		$	$
EST. _____	PORT OF	$	$

ESTIMATED DELIVERY: APPROXIMATELY 10 weeks ex-factory AFTER CONFIRMED C

CREDIT APPROVAL, AND TECHNICAL DATE RECEIVED.

PLEASE REFER TO THE ATTACHED SHEET(S) FOR SPECIFICATIONS QUOTED ON THIS EQUIPMENT (ALSO REFER TO THE ATTACHED BRO AND/OR SALES DRAWING FOR OUR STANDARD SPECIFICATIONS).

THIS PRICE FIRM IF CONFIRMED ORDER AND COVERING IRREVOCABLE LETTER OF CREDIT OR CREDIT APPROVAL RECEIVED WITHIN 60 days

TERMS OF PAYMENT: CONFIRMED IRREVOCABLE LETTER OF CREDIT,

SPECIAL NOTES
Units designed for on-site field installation.

ESTIMATED SHIPPING DIMENSIONS/ unit
7' (LENGTH) x 8' (WIDTH) x 12' (HEIGHT)

EST. SHIPPING WEIGHT/ 1,600 lbs

U.S. CUSTOMERS ONLY: QUOTATION EXCLUDES ANY APPLICABLE FEDERAL, STATE, OR LOCAL TAXES WHICH SHALL BE PAID BY PURCHASER. SUBJECT TO INCOTERMS OF 1980.

BY David E. Hoffman

FORM NO. 102A

COUNTRY AND ORIGIN AND MANUFACTURE: UNITED STATES OF AMERICA

INTERNATIONAL FERTILIZER DEVELOPMENT CENTER

2500 U.S. GALLON ALUMINUM

PETROLEUM TRUCK TANK BODY

SPECIFICATIONS

MAKE:	TRAILMASTER TANKS, INC. U.S.A.

GENERAL DESCRIPTION

CAPACITY:	2500 U.S. GALLONS ± 3% (9470 LITERS).
CONSTRUCTION:	STRAIGHT ELLIPTICAL.
WELDS:	W-1.
CODES:	U.S. MC306AL.
COMPARTMENTS:	ONE.
WORKING PRESSURE:	1 PSI, 7 PSI HYDROSTATIC TEST.
TEMPERATURE:	200° FAHRENHEIT MAXIMUM (93° CENTIGRADE).
COMMODITY(S):	GASOLINE/DIESEL.

BARREL ASSEMBLY

SHELL:	TOP: .173" (4.39) 5454 ALUMINUM. BOTTOM: .203" (5.84) 5454 ALUMINUM.
BAFFLES:	TWO .225" (5.72) ALUMINUM.
RINGS:	NONE.
FRAME:	FULL LENGTH ANGLE.
SPILLDAM:	FULL LENGTH, DOUBLE LEG SEALED CHANNELS.
OVERTURNS:	WITH DAM AT EACH END, DRAIN THROUGH LADDER AT REAR.

2500 U.S. GALLON ALUMINUM
PETROLEUM TRUCK TANK BODY
SPECIFICATIONS
PAGE 2

TANK FITTINGS AND PIPING

MANWAY/DOMES:	ONE 16" X 10" (406 X 254) P.A.F. MANWAY WITH OFFSET FILL.
VENTS:	MECHANICAL OPERATED VAC/PRESS IN CONJUNCTION WITH EMERGENCY VALVE.
VAPOR:	NONE.
CLEANOUTS:	TWO 3" (76.2) COUPLINGS WITH PLUGS ON TOP BETWEEN BAFFLES AND BETWEEN FRONT HEAD AND FOREMOST BAFFLE.
SUMPS:	3" (76.2) STEEL, BOLTED FLANGE.
EMERGENCY VALVE:	ALLEGHENY 3" (76.2) ALUMINUM MECHANICAL ELBOW EMERGENCY VALVE. OPERATOR ON DRIVERSIDE. REMOTE AT FRONT.
PIPING:	3" (76.2) SCHEDULE 10 ALUMINUM PIPE TO REAR.
LINE VALVES:	3" (76.2) ALUMINUM GATE VALVE.
GASKETS:	CORK/BUNA.
HOSE ADAPTORS:	ONE ALUMINUM 3" (76.2) WITH DUST CAP.
SCRUBBERS:	N/A.
GAUGES/OVERFILL:	NONE.

TANK ACCESSORIES

LADDER:	1" (25.4) ALUMINUM PIPE WITH TREAD-GRIP RUNGS AND TOP PLATFORM.
WALKWAY:	NONE.

2500 U.S. GALLON ALUMINUM
PETROLEUM TRUCK TANK BODY
SPECIFICATIONS
PAGE 3

HOSE CARRIER: TWO, 6" X 10' (152 X 3048) FULL LENGTH HOSE TUBES, ONE EACH SIDE WITH DOORS AT REAR. TWO 3" X 10' (76.2 X 3048) PRODUCT HOSES INCLUDED.

FENDERS: NONE.

MUDFLAPS: NONE.

CABINET: NONE.

TIRE CARRIER: NONE.

CHASSIS, RUNNING GEAR AND COUPLER

TRUCK FURNISHED BY CUSTOMER. TANK SHOULD BE MOUNTED ON CUSHION BOARDS, WITH AT LEAST TWO 3/8" (9.65) STEEL PLATES PER SIDE BOLTED TO TANK FRAME AND TRUCK FRAME (INCLUDED).

SERVICE LIGHTS AND WIRING

AIR/ELECTRICAL: 12 VOLT ENCLOSED VAPOR PROOF SYSTEM WITH REAR LIGHTS IN INDIVIDUAL LIGHT BOXES.

LIGHTS: BETTS; U.S. D.O.T. SPECIFICATION.

COATINGS

EXTERIOR PAINT: NONE.

INTERIOR LINING: NONE.

MISCELLANOUS

CALIBRATION THEORETICAL CHART IN 1/4" (6.35) INCREMENTS.

STRAPPING: ONE MARKER ROD 24" (610) LONG WITH THREE DISCS PER COMPARTMENT.

2500 U.S. GALLON ALUMINUM
PETROLEUM TRUCK TANK BODY
SPECIFICATIONS
PAGE 4

MANUAL:	ONE PARTS AND SERVICE MANUAL PER UNIT.
EST WEIGHT:	1600 LBS. (726 KGS.).
DIMENSIONS:	7' X 8' X 12' (2134 X 2438 X 3658). SHIPPING DIMENSIONS.
NOTES:	Unless specified otherwise, all dimensions in parenthesis are millimeters.

Trailmaster Truck Tanks are custom designed for a wide range of industrial applications.

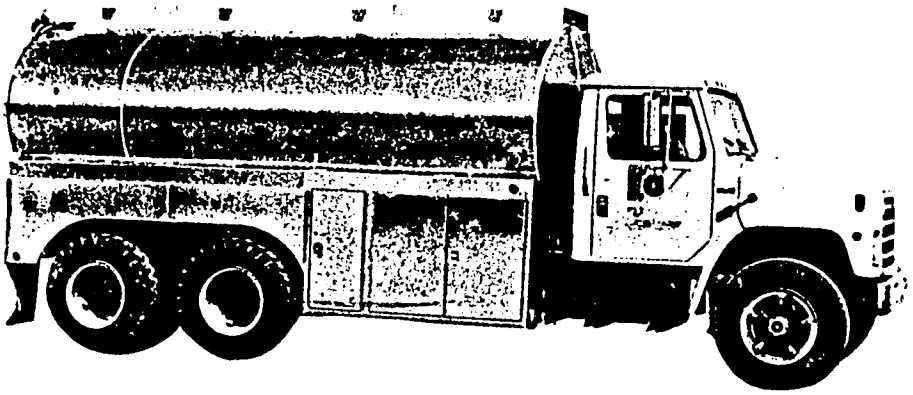

Petroleum Marketing

- Aluminum MC-306
- Bottom loading
- Vapor recovery
- Overfill protection

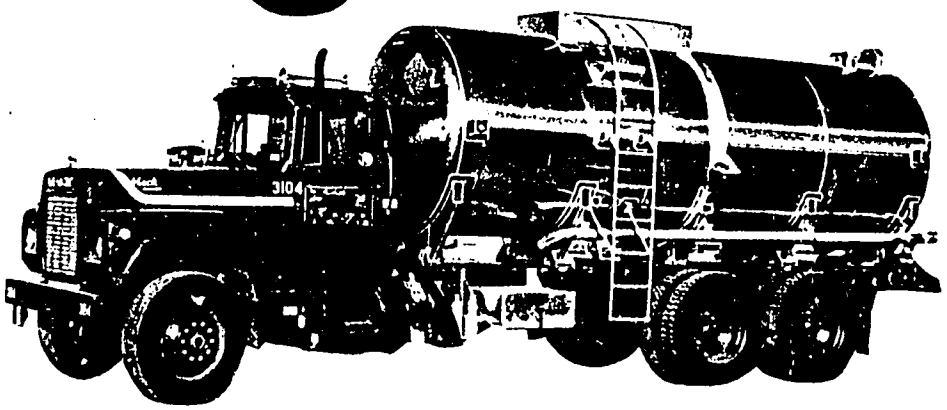

Oil Field

- Aluminum or Steel
- D.O.T. MC-306 or MC-307
- Rugged reliability

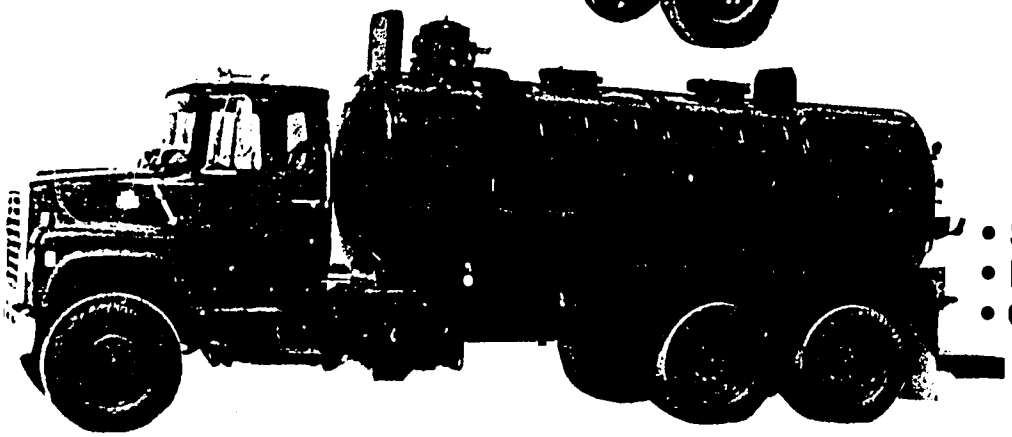

Hazardous Waste

- Steel or Stainless Steel
- D.O.T. MC-307 & MC-312
- Complete vacuum accessories

Special Requirements

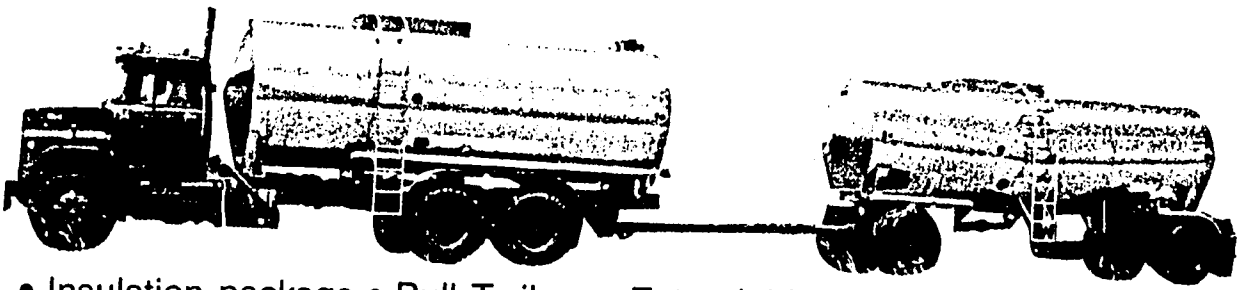

• Insulation package • Pull Trailers • Extendable drawbars • Heat packages

Trailmaster® Tanks, INC.

Street Address:
1121 Cantrell - Sansom Road
Fort Worth, TX 76131

(817) 232-0900
FAX (817) 232-8954

Mailing Address:
P.O. Box 161759
Fort Worth, TX 76161

Trailmaster Truck Tanks

TRUCK DATA SHEET

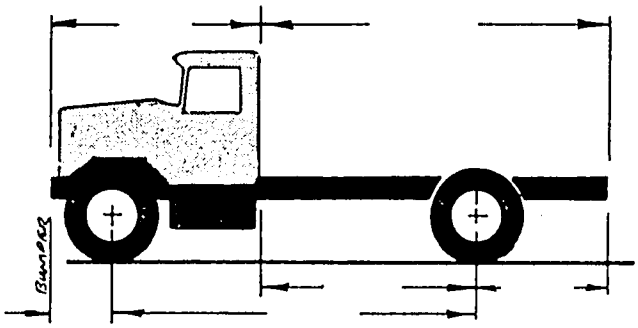

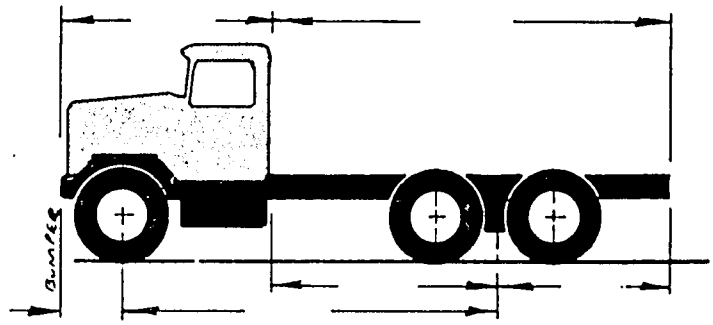

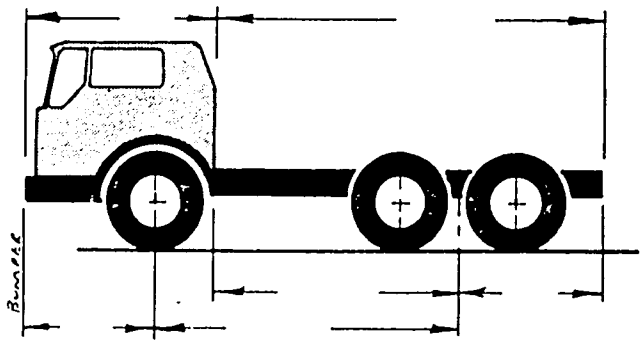

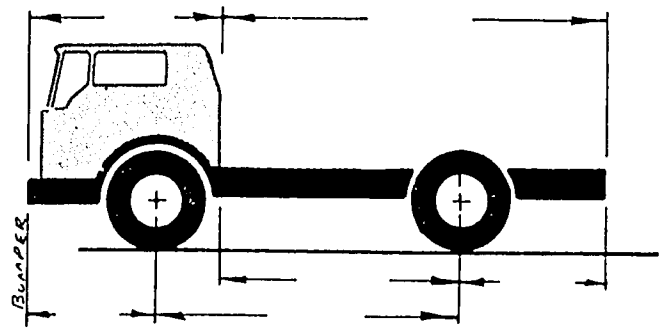

FRONT AXLE WT. — _____

FRONT AXLE ALLOWABLE — _____

REAR WT. — _____

REAR AXLE ALLOWABLE — _____

HR INTERNATIONAL, INC.

FULFILLING SEMI-TRAILER NEEDS AROUND THE GLOBE

HR International. The answer to all your semi-trailer requirements. We are specialists solely within the semi-trailer industry in isolating, identifying and solving the unique problems faced by fleets worldwide. We can substantially cut your transport costs, increase your profits and retain your competitive edge. Let us place our custom export expertise to work for you.

HR INTERNATIONAL, INC. • 16990 DALLAS PARKWAY, SUITE 202 • DALLAS, TEXAS 75248-1903 • U.S.A.

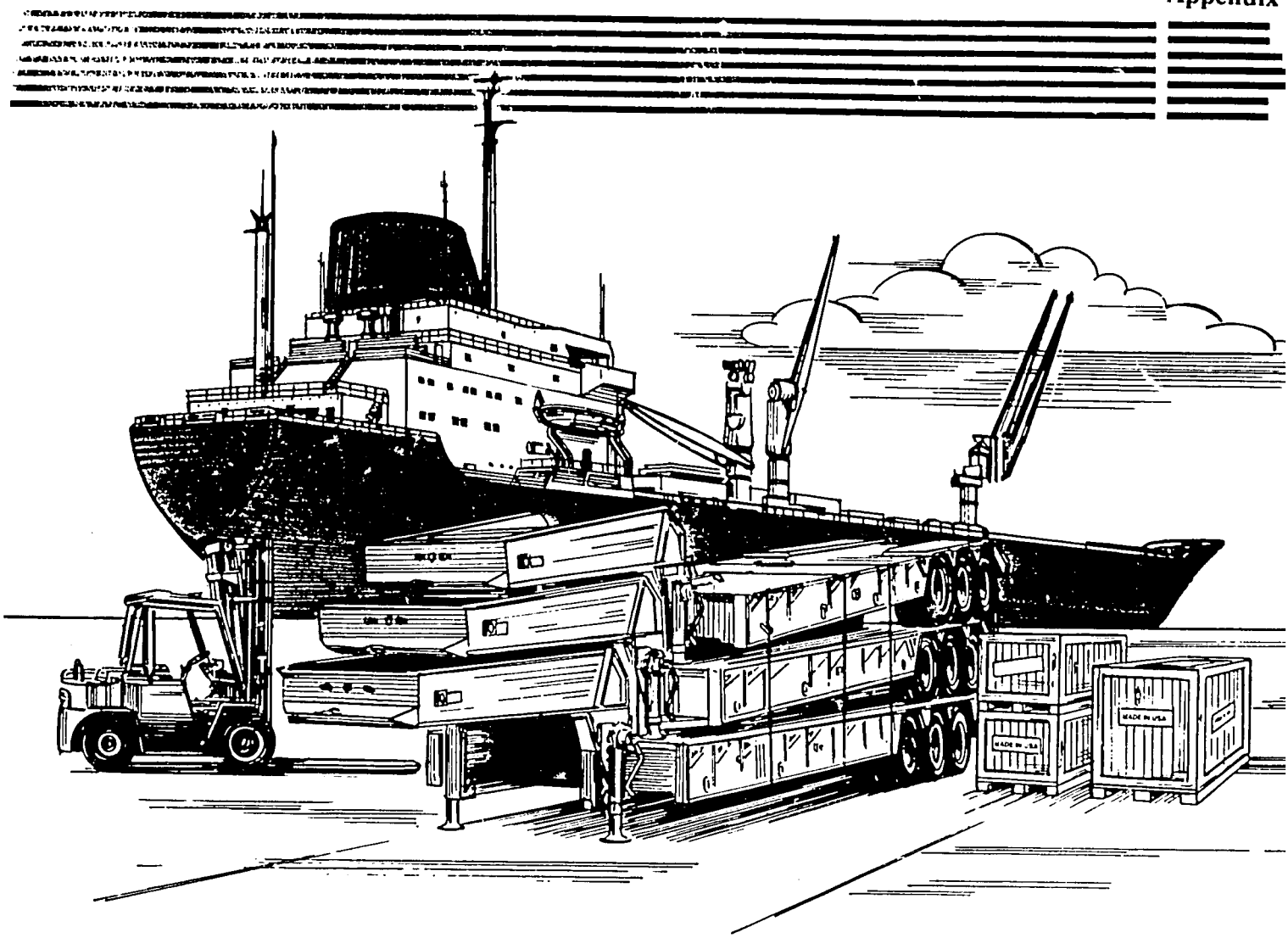

SUPPLIERS OF QUALITY, RELIABILITY, AND PERFORMANCE TO SEMI-TRAILER FLEETS WORLD WIDE

HR International has been an industry leader for over a decade in designing and supplying semi-trailers for foreign government ministries, overseas private freight carriers, heavy-haul transport companies and international trucking fleets with custom-designed semi-trailers for every type of application imaginable.

HRI is a one-of-a-kind American company operating only within the semi-trailer industry, geared solely for export to worldwide markets. We take pride in our unique concept of analyzing the particular problems faced by our widely varied multi-national customer base.

UNITED STATES OF AMERICA

Our custom approach in designing and delivering the specific semi-trailer to overcome your transport obstacles, meet your contract deadlines, and hence increase your profitability has become our trademark. This concentration within the semi-trailer industry allows for our highly specialized expertise to serve your fleet and transportation needs.

A FULL LINE OF TIME AND TERRAIN TESTED SEMI-TRAILERS FOR YOUR FLEET

We offer single source procurement (one-step shopping), for all your semi-trailer needs: Lowbeds, Platforms, Dumps (Tippers), Tanks, Pneumatic Bulkers, Dry Freight Vans, Refrigerated Vans, Curtain-sided Vans, Container Chassis, Grain, Logging & Pole semi-trailers, and Aircraft Refuelers, plus specialty semi-trailers. Such a concept allows for total interchangeability among the various semi-trailers in your fleet in conjunction with your existing truck tractors.

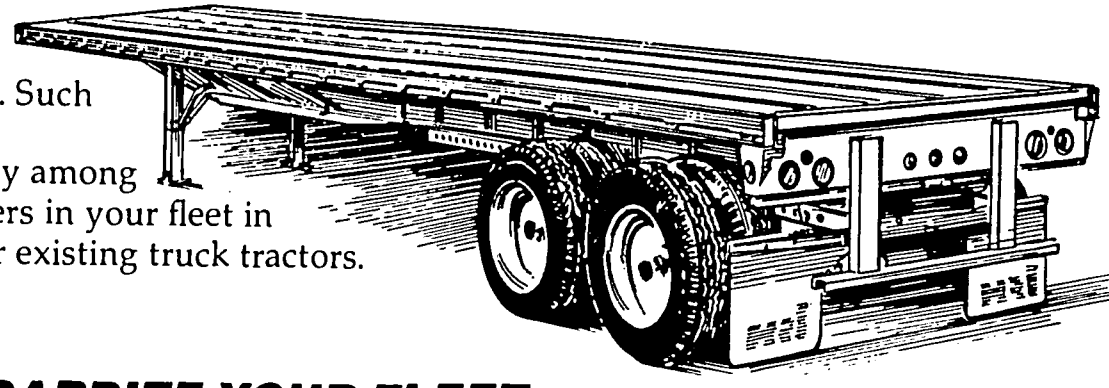

LET US STANDARDIZE YOUR FLEET, CUT YOUR COSTS AND CONTRIBUTE TO YOUR GROWTH

Furthermore, we will tailor the components within each semi-trailer (i.e., axles, suspensions, landing legs, wheels, brakes, air and electrical systems, etc.) to match your present semi-trailer fleet as closely as possible. We also standardize these components among the various different semi-trailers types (such as lowbeds, platforms, dumps, tanks, vans, etc.) supplied by us to harmonize, and thus greatly reduce your spare parts inventory necessary to service and maintain these different semi-trailers.

In addition, as many of our customers request spare parts when purchasing their semi-trailers, we in turn ship the parts within the semi-trailer cube, thus incurring no freight charges whatsoever on these parts.

This has proven to be a highly popular practice with virtually all our foreign accounts.

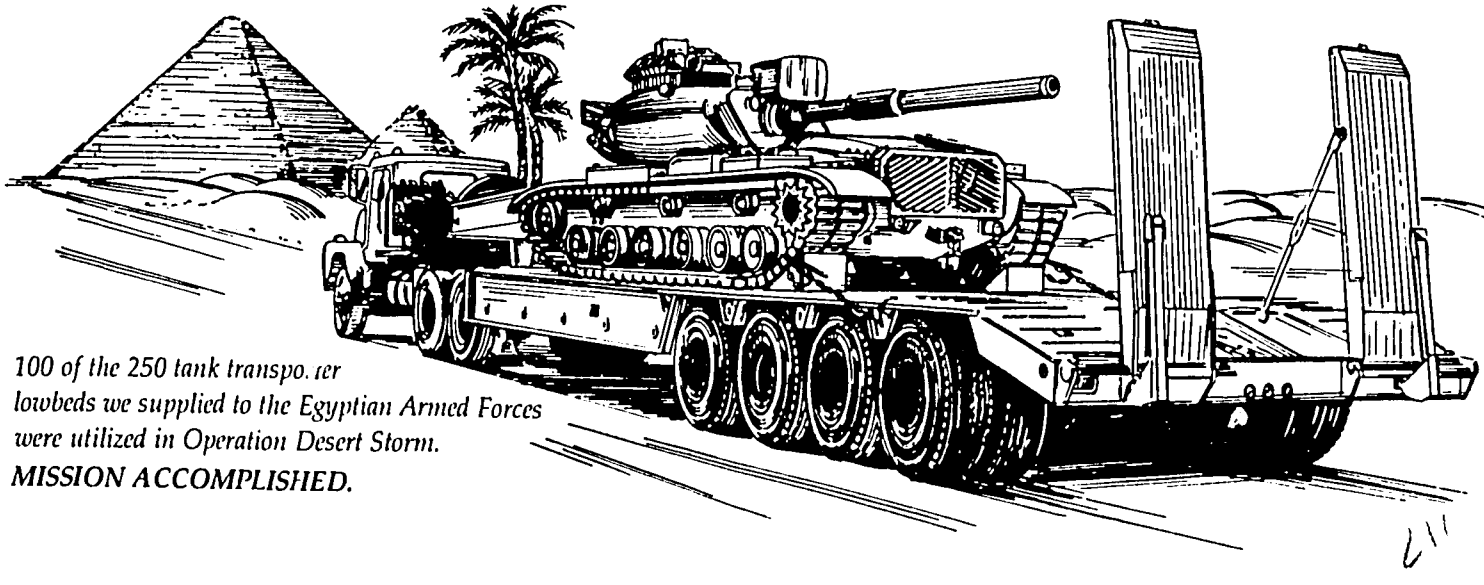

100 of the 250 tank transporter lowbeds we supplied to the Egyptian Armed Forces were utilized in Operation Desert Storm.
MISSION ACCOMPLISHED.

SPECIALISTS IN SUPPLYING TOP QUALITY SEMI-TRAILERS TO EVERY CORNER OF THE GLOBE.

At HRI, we are committed to excellence. Our desire to service and support our foreign accounts after the sale is self-evident. At times this commitment demonstrates great dedication and personal sacrifice to assist our overseas customers in attaining their goals. In the international trucking industry, certain things are expected of you. How and if you respond is what makes the difference. We stand on our record in this regard, because to the long-haul trucker moving his cargo through often hostile terrain down the endless black ribbon, this commitment translates into reliability and faith in his semi-trailer. For them there is no finish line, no final terminal, no end of the road.

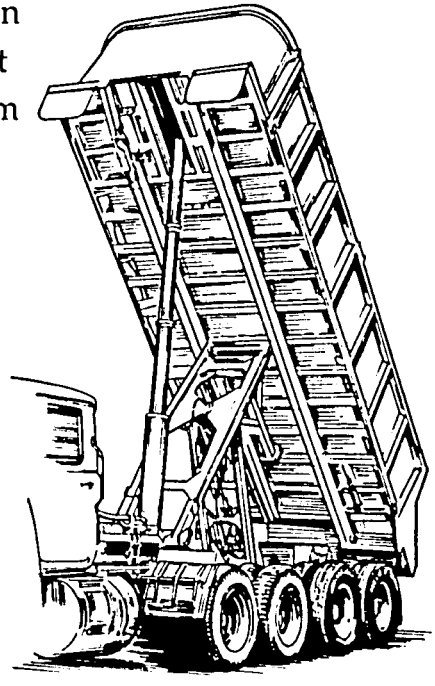

AFTER 10 YEARS IN THE SEMI-TRAILER EXPORT BUSINESS, WE KNOW YOUR BUSINESS.

We are proud to be in a business that helps people, municipalities, and entire countries develop their resources, build infrastructures, and hence lead healthier more rewarding lives.

At HRI, we have exported semi-trailers to all parts of the world. Let us help you with the ins and outs in your parts.

And to our many, many loyal worldwide customers, we thank you for your ongoing business. We will always do everything possible to merit the confidence you have placed in us.

HR International.
Total commitment. Dedication. Pride.

HR INTERNATIONAL, INC.

16990 DALLAS PARKWAY, SUITE 202 • DALLAS, TEXAS 75248-1903 • U.S.A.
TELEFAX (214) 733-1210 • TELEX 6502611688 (via WUI) • TELEPHONE (214) 733-1180

Appendix F

Sulzer Burckhardt Proposal for Oxygen Compressor

Appendix F-1

SULZER BURCKHARDT Engineering Works Ltd. Winterthur Group

Postal Address: Hegifeldstr. 10 CH-8404 Winterthur	Date:05.03.1993 Message No. Page 1 of .. 6. Page Fax No.: 001 205 381 7408
Telefax: 052/262 00 51 Telex: 896 060 62 Telephone: 052/262 11 22	**Please deliver to:JORGE R.POLO PROJ.- ANALYST,OUTREACH DIVISION, INTERNAT. FERTILIZER DEVELOPMENT CENTER, P.O.BOX 2040, MUSCLE SHOALS Location: ALABAME, U. S. A.**
From: W. Zurbrügg Direct Dial.: 052/262 54 45	**Reference:**Your fax, March 4,1993 **O2-Laby-Compressor -proposals for Uzina Gogo Nushi, Fier, Albania**

PC: JRP.f JJS TAN 3/5/93

DEAR MR. POLO,

MANY THANKS FOR YOUR LAST FAX.I WE DID VERIFY FURTHER POSSIBILITIES AND OUR RE-EXAMINATION RESULTS IN THE FOLLOWING POINTS:

1) WE HAVE LEARNED THAT SWEDEN-CUSTOMER HAS SOME INTERESTED PARTY,WHO WILL BUY **BOTH LABY-COMPRESSORS WITH ALL INSTALLED ACCESSORIES.** SO HE IS NOT INTERESTED NOW TO SALE ONLY ONE COMPRESSOR WITHOUT ACCESSORIES. MOREOVER,THE ACCESSORIES ARE NOT DESIGNED FOR THE HIGHER DESIGN PRESSURE, NEEDED IN FIER, AL.

2) AS WE KNOW TODAY, OTHER INSTALLED LABYS OF THE SAME- OR OF THE SIMILAR TYPE ARE STILL RUNNING AND NOT AWAILABLE IN THE NEAR FUTURE.

3) OUR SHORTEST POSSIBLE DELIVERY WITH LABY-TYPE **4D225-3A** WILL BE **APPROX. 7 MONTHS** AFTER RECEIPT OF THE ORDER, THE FIRST PAYMENT AND THE BANKGUARANTEE. ACC.TO REVISED CONTRACT, DATED 2.3.1993, SUBJECT TO PRIOR SALE OF THE CRANK GEAR.

4) AS AN ALTERNATIVE WE ARE IN POSITION TO SUPPLY ONE LABY TYPE **4D225-3E** WITH PISTON DIAMETER **330** MM (INSTEAD OF 360 MM) ON 2ND. STAGE. **CYLINDERBLOC MADE IN NODULAR CAST IRON** INSTEAD OF CAST IRON. ALL OTHER DETAILS ARE NOT DIFFERENT. TECHNICAL DATA SEE ENCLOSED DATA SHEETS.
SHORTEST POSSIBLE DELIVERY: **APPROX. 5 MONTHS** AFTER SAME CONDITIONS AS MENTIONED IN 3). SEE ABOVE.

WE ARE PLEASED TO ASSIST YOU WITH ABOVE MENTIONED PROPOSALS, BASED ON THE CONTRACT,(REV.-MARKS "3.3.93/W.Z.") AND HOPE THIS COMPLIES WITH YOUR REQUIREMENTS.

YOURS FAITHFULLY

SULZER BURCKHARDT
SALES 0506, WILLI ZURBRUEGG

i.V. W. Zurbrügg

ENCLOSURES:MENTIONED

214

Appendix F-2

SULZER BURCKHARDT Winterthur
Labyrinth-Piston Compressors

05.03.93

Compressor Computation

W.ZURBRUEGG

-2/6-

compressor type	4D225-3A
reference	FDC FOR FIER, AL
order- or project-no.	CONTRACT 082/CO-AF/91.M,REV.3.
operating case	1964- DESIGN
gas	gas mixture

operating data

stage		1	2	3
relative humidity	%	100.000	100.000	100.000
mole weight	kg/kmol	31.4	31.7	31.9
cp/cv average		1.383	1.379	1.391
Z at suction		0.999	0.998	0.992
Z at discharge		1.000	1.000	1.002
suction pressure	bar abs	1.000	3.197	12.263
suction temperature	deg C	31.0	40.0	40.0
discharge pressure	bar abs	3.399	12.516	45.400
discharge temp.	deg C	155.3	180.5	173.8
mass flow, humid	kg/h	3581.2	3535.1	3500.6
flow (0C,1.013bara)h	Nm3/h	2555.7	2498.4	2455.6
suction volume,humid	m3/h	2884.8	906.7	231.0
power consumption	kW	171.8	176.0	155.5
tot. power input	kW	503.2		
recomm. motor power	kW	578.7		
speed	min-1	490.0		
tolerance on				
suction volume	% -	5.0		
	% +	5.0		
power consumption	% -	5.0		
	% +	5.0		

*** the indicated values for interstage pressures and discharge temperatures are approximated !

Appendix F-3

SULZER BURCKHARDT Winterthur
Labyrinth-Piston Compressors

05.03.93

Compressor Computation

W. ZURBRUEGG

-3/6-

compressor type	4D225-3A
reference	FDC FOR FIER, AL
order- or project-no.	CONTRACT 082/CO-AF/91.M.REV.3.
operating case	1964- DESIGN
gas	gas mixture

compressor data

stage		1	2	3
no. of pistons per stage		2	1	1
acting . a)		2.00	2.00	2.00
cylinder liners yes/no		no	no	no
cylinder liners dry/wet				
piston diameter	mm	440.	360.	200.
stroke	mm	225.	225.	225.
piston displacement	m3/h	3964.9	1317.4	386.4
clearence volume	%	10.05	11.55	19.12
volum. efficiency	%	72.8	68.8	59.8
valve gas velocity	m/s	35.0	30.1	18.6
suc. resp. dis.valves/cyl.h.		2	2	1
SULZER plate valve type		176K 6a	156K 12a	156K 48a
piston rod diameter	mm	75.	75.	75.
allow. rod loading	kN	100.	100.	100.
act. gas rod load t	kN	-35.4	-89.8	-84.5
act. gas rod load c	kN	36.5	95.8	109.1
act.gas+iner.r.l. t	kN	-29.8	-75.9	-73.2
act.gas+iner.r.l. c	kN	28.1	8[illegible].3	99.9
piston mat.(1=RR,2=GG,3=AL)		1	1	1
duration of reversal	deg	178.	170.	176.
allow.cyl.work.pres.	bar g	5.0	15.0	46.0
allow.cyl.work.temp.	deg C	250.	250.	250.
rec.relief valve pr.	bar g	0.0	0.0	0.0
hydrostatic test pr.	bar g	7.5	22.5	69.0
pipe con. nominal ND	mm	300	200	125

average piston speed	m/s	3.675
inertia of flywheel	kgm2	350.0
deg.of irregularity	1/	110
filling of oil appr.	1	270.

a) 1.0 all pistons/stage single acting
2.0 all pistons/stage double acting
1.0-2.0 average acting/piston/stage

-2/6

Appendix F-4

SULZER BURCKHARDT Winterthur
Labyrinth-Piston Compressors

05.03.93

Compressor Computation

W.ZURBRUEGG

-4/6-

compressor type	4D225-3A
reference	FDC FOR FIER, AL
order- or project-no.	CONTRACT 082/CO-AF/91.M,REV.3.
operating case	1964- DESIGN
gas	gas mixture

gas data

gas composition

gas formula	gas number	volume %
O2	32	95.50
H2O	20	4.50

pseudocritical data

critical temperature	deg C	-105.5
critical pressure	bar a	55.220
Zeta critical		0.287
acentric factor		0.04
mole weight	kg/kmol	31.4
gas constant	J/kgK	265.0

normal conditions

normal density	kg/Nm3	1.401
cp/cv normal		1.395

217

Appendix F-5

SULZER BURCKHARDT Winterthur
Labyrinth-Piston Compressors

05.03.93

Compressor Computation

W.ZURBRUECC

-5/6-

compressor type	4D225-3E
reference	FDC FOR FIER, AL
order- or project-no.	CONTRACT 082/CO-AF/91.M,REV.3.
operating case	1964- DESIGN
gas	gas mixture

operating data

stage		1	2	3
relative humidity	%	100.000	100.000	100.000
mole weight	kg/kmol	31.4	31.7	31.9
cp/cv average		1.383	1.380	1.391
Z at suction		0.999	0.998	0.992
Z at discharge		1.000	1.000	1.002
suction pressure	bar abs	1.000	3.638	12.001
suction temperature	deg C	31.0	40.0	40.0
discharge pressure	bar abs	3.839	12.251	45.400
discharge temp.	deg C	169.8	162.5	176.4
mass flow, humid	kg/h	3456.5	3406.5	3379.0
flow (0C,1.013bara)h	Nm3/h	2466.7	2404.6	2370.4
suction volume,humid	m3/h	2784.3	766.8	227.9
power consumption	kW	182.6	145.8	153.4
tot. power input	kW	481.8		
recomm. motor power	kW	554.1		
speed	min-1	490.0		
tolerance on				
suction volume	% -	5.0		
	% +	5.0		
power consumption	% -	5.0		
	% +	5.0		

*** the indicated values for interstage pressures and discharge temperatures are approximated !

Appendix F-6

05.03.93

SULZER BURCKHARDT Winterthur
Labyrinth-Piston Compressors

W.ZURBRUEGG

Compressor Computation

-6/6-

compressor type	4D225-3E
reference	FDC FOR FIER, AL
order- or project-no.	CONTRACT 082/CO-AF/91.M.REV.3.
operating case	196 - DESIGN
gas	gas mixture

compressor data

stage		1	2	3
no. of pistons per stage		2	1	1
acting a)		2.00	2.00	2.00
cylinder liners yes/no		no	no	no
cylinder liners dry/wet				
piston diameter	mm	440.	330.	200.
stroke	mm	225.	225.	225.
piston displacement	m3/h	3964.9	1102.3	386.4
clearence volume	%	10.05	13.65	19.12
volum. efficiency	%	70.2	69.6	59.0
valve gas velocity	m/s	35.0	25.3	18.6
suc. resp. dis.valves/cyl.h.		2	2	1
SULZER plate valve type		176K 6a	156K 12a	156K 48a
piston rod diameter	mm	75.	75.	75.
allow. rod loading	kN	100.	100.	100.
act. gas rod load t	kN	-41.9	-68.7	-85.3
act. gas rod load c	kN	43.2	74.8	109.8
act.gas+iner.r.l. t	kN	-28.3	-56.8	-74.0
act.gas+incr.r.l. c	kN	31.1	66.1	100.7
piston mat.(1=BR,2=GG,3=AL)		1	1	1
duration of reversal	deg	148.	168.	174.
allow.cyl.work.pres.	bar g	6.5	17.0	48.0
allow.cyl.work.temp.	deg C	250.	250.	250.
rec.relief valve pr.	bar g	0.0	0.0	0.0
hydrostatic test pr.	bar g	9.8	25.5	72.0
pipe con. nominal ND	mm	300	200	125

average piston speed	m/s	3.675
inertia of flywheel	kgm2	350.0
deg.of irregularity	1/	134
filling of oil appr.	l	270.

a) 1.0 all pistons/stage single acting
2.0 all pistons/stage double acting
1.0-2.0 average acting/piston/stage

219

Appendix F-7

Sent 1800 2 mar 93

INTERNATIONAL FERTILIZER DEVELOPMENT CENTER • MUSCLE SHOALS, ALABAMA 35662 USA
P.O. BOX 2040 • 205-381-6600
TWX-810-731-3970 IFDEC MCHL
TELEFAX NO. 205-381-7408

March 1, 1993

Mr. Hermann Fritschi, Prokurist
Technischer Delegierter fur Albanien
Konzernbereich Sulzer International
CH-8401 Winterthur
Switzerland

Telefax: ~~052 262 20 97~~ 0041 52 262 0103

Dear Mr. Frtschi:

Please excuse my communicating to you in English, but I have no access to a German translator.

Our Center, IFDC, is performing a study for the United States Agency for International Development (USAID) on the situation of the local nitrogen fertilizer producer in Fier, Albania, the Uzina Plehrave Azotike Fier (formerly Uzina Gogo Nushi). From the study, it is expected that funds will be allocated by USAID to provide assistance to the Fier Plant to be used in getting the facility ready for continuous operation at full capacity.

As you are probably aware, the Linde air separation unit contained as part of the Montecatini Ammonia plant in "Train 210," built in 1966/7, includes two Sulzer Labyrinth-Piston Compressors. These compressors are referred to by Sulzer as: Type 4D225-3A MASCH-NR 6351/52/UZINA GOGO NUSHI, FIER AL. I am sure you also are aware of the fact that one of these two compressors underwent a fire damage some years ago and has been out of operation since.

I make reference to a telex received by MINERGOIMPEKS - Tirana, dated 25.03.91 and signed by 0507/428/R. Steiner (Erection + Service), which was addressed to Mr. Thanas Merkuri, General Director, in which Mr. Steiner gives operating data for two used compressors which are out of service in Sweden and which could be purchased for use at the Fier Plant.

Could you please reply to the following questions relating to the present situation of these compressors: Is the compressor that could be used to replace the Albanian oxygen compressor still available at the Swedish company? If so, do you have an indication of what the present price of this compressor would be? The people at Fier have indicated that in 1991 it was about US $150,000. If not, could you put us in contact with the Swedish owner? We

270

understand the compressor would have to be repaired and/or refurbished at your factory; what cost would this have? How long would your reworking on the compressor take?

I would appreciate your earliest reply to these questions. Please send your reply to our Headquarters in Muscle Shoals, Alabama:

Jorge R. Polo, Sr. Project Analyst
Outreach Division
International Fertilizer Development Center
P.O. Box 2040
Muscle Shoals, Alabama
U.S.A.

Telephone: 001 205 381 6600
Telefax: 001 205 381 7408
Telex: TWX 810 731 3970

Sincerely,

Jorge R. Polo

Appendix F-9

SULZER BURCKHARDT Engineering Works Ltd. Winterthur Group

Postal Address: Hegifeldstr. 10 CH-8404 Winterthur	Date:02.03.1993 Message No. Page 1 of 30. Page Fax No.: 001 205 381 7408
Telefax: 052/262 00 51 Telex: 896 060 62 Telephone: 052/262 11 22	**Please deliver to:JORGE R.POLO PROJ.- ANALYST,OUTREACH DIVISION, INTERNAT. FERTILIZER DEVELOPMENT CENTER, P.O.BOX 2040, MUSCLE SHOALS Location: ALABAME, U. S. A.**
From: W. Zurbrügg Direct Dial.: 052/262 54 45	**Reference:**Your fax, March 1.1993 **O2-Laby-Compressor 4D225-3A** **Our Contract 17.7.91/Minergoimpeks** **for Uzina Gogo Nushi, Fier, Albania**

pc: JRP JJS TAN 3/3/93

GENTLEMEN,

WE THANK YOU FOR YOUR FAX. YOU EXPLAIN YOUR INTEREST TO FIND A SOLUTION IN CASE OF THE **OXYGEN -LABY-COMPRESSOR.**

PLEASE NOTE, THAT THE ENCLOSED CONTRACT BETWEEN MINERGOIMPEKS AND SULZER BURCKHARDT IS STILL VALID NOW.

THE EXISTING CONTRACTPRICE OF SFR. 546'000.-- WILL BE INCREASED ONLY WITH APPROXIMATIVE THE HALF INCREASING COSTS OF THREE PERCENT PER YEAR TO **SFR. 579'000.--, VALID TILL JUNE 30.1993.**

THE TECHNICAL PART AND THE EXTENT OF SUPPLY, ACCESSORIES,SPARE PARTS LIST ETC. PLEASE FIND IN THE **ENCLOSURES 1 TO 3 OF CONTRACT NO. 082/CO-AF/91.M.**

WE ARE PLEASED TO SEND YOU OUR PROPOSAL WITH THE ENCLOSED.VALID CONTRACT,(REV.-MARKS "3.3.93/W.Z.") AND HOPE THIS COMPLIES WITH YOUR REQUIREMENTS.

FOR FURTHER QUESTIONS AND ADITIONAL INFORMATION PLEASE DO NOT HESITATE TO CONTACT US.

IN AWAITING OF YOUR REPLY
YOURS FAITHFULLY

SULZER BURCKHARDT

VERKAUF 0506

i.V. W. Zurbrügg

WILLI ZURBRUEGG

ENCLOSURES: EXISTING CONTRACT, REVISED 3.3.1993

Appendix F-10

0506/WZ/Ma
17.07.91
Page 1

CONTRACT

Contract No. 082/CO - AF/91.M

Dated:

Between MINERGOIMPEKS
Rruga "Marsel Kashen", No. 86
Tirana
Republic of Albania
(hereinafter called the Buyer)

on one side

and SULZER BURCKHARDT
ENGINEERING WORKS LTD.
LABYRINTH-PISTON COMPRESSORS
CH - 8404 Winterthur
SWITZERLAND

(hereinafter called the Seller)

on the other side, who authorise their representatives to sign this Contract with the following terms and conditions:

Appendix F-11

ARTICLE 1 - SUBJECT OF THE CONTRACT

1.1 The BUYER agrees to buy from the SELLER and the SELLER agrees to sell and deliver to the BUYER:

a) One pos. of oxygen labyrinth compressor Type 4D225-3A without flywheel and other accessories according to the technical specification and scope of supply defined in Enclosure No. 1.

b) Spare parts and wear parts set forth in detail in Enclosure No. 3.

c) Technical Documentation as per Article 5 and Enclosure No. 2

1.2 The SELLER undertakes to execute Technical Services at the erection site on the bases and the conditions foreseen in Article 7.

1.3 The SELLER undertakes to supply the BUYER with the oxygen labyrinth compressor designed and produced on the bases of up-to-date existing technology and produced utilising high quality material.

1.4 The SELLER undertakes to be in BUYER's disposal during the 10 years after the date of final acceptance of the compressor for technical assistance and consultations regarding defects happened or any problem for functioning and/or maintenance of the compressor.
Should such conditions involve travel to Albania of SELLER's specialists the conditions of such consultations will be agreed upon before travel.

Appendix F-12

0506/WZ/Ma
17.07.91
Page 3

ARTICLE 2 - PRICE AND TOTAL VALUE OF THE CONTRACT

2.1 The total price to be paid by the BUYER to the SELLER for the supply of the compressor, spare and wear parts, technical documentation and technical services subject of the CONTRACT is

SFr. ~~546'000.--~~ 579'000.-- 3.3.93 WZ

(Five hundred ~~fourtysix~~ seventynine thousend)

The price for the sea transportation-packing is included in the total price of this CONTRACT.

2.2 Prices for all the supply as per 2.1 are FOB Triest (Incoterms ~~1980~~ 1990) fixed and firm and shall not be subject to any escalation and other charges. 3.3.93 WZ

WZ

Appendix F-13

ARTICLE 3 - SCHEDULES AND CONDITIONS OF PAYMENTS

3.1 The BUYER undertakes to pay the SELLER the value of the goods and technical services subject of this CONTRACT by an irrevocable documentary credit to be opened by the BUYER through the Bank of Albanian State for Foreign Relations valid for delivery period plus two months in favour of the SELLER at Swiss Bank Corporation in Basle.

3.2 The letter of credit will be opened and confirmed without reserve by the Swiss Bank Corporation in Basle. Within 30 days from the signing date of this CONTRACT and will cover the total price of this CONTRACT as mentioned in Article 2.1.

3.3 Terms of Payment:

20 % of Contract price within 30 days against SELLER's Bankguarantee for the same amount after placement of the order.

80 % against the following documents

3.3.1 Documents for shipment

- Three complete original and one duplicate clean on board Bill of Loading or Warehouse receipt if the shipment cannot be effected for reasons not due to SELLER's fault
- Packing list of the SELLER in 4 copies
- Quality certificate in triplicate the text of which will be:
  "We the SELLER certify that the goods covered by packing list No. are of good quality and in conformity with the terms of the CONTRACT No. 082/CO - AF/91.M."
- Commercial invoice in 3 copies
- Bank Guarantee for 10 % of the total value of the CONTRACT.

62.

Appendix F-14

0506/WZ/Ma
17.07.91
Page 5

3.3.2 The seller accept to grant a Bank Guarantee for 10 % Performance bond, valid for the whole time of Guarantee (12 months) with documents for shipment as mentioned in 3.3.1.

3.3.3 All the commissions and charges for the opening of the letters of credit made in Albania shall be born by the BUYER. The corresponding costs and charges made in SELLER's country shall be born by the SELLER.

Appendix F-15

ARTICLE 4 - TERMS AND CONDITIONS OF DELIVERY

4.1 The SELLER undertakes to deliver the goods subject of this CONTRACT FOB - Triest sea port (the term FOB according to Incoterms ~~1980~~ 1990) 10 months after the signing date of this CONTRACT and receipt of letter of credit (30 days later) 3.3.93 WZ

4.2 The goods will be packed in the best way in order to withstand the sea and inland transportation, and numerouse handlings and unloadings.
The SELLER will take measures to prevent damages resulting from moisture, rain, rust, corrosion, shocks in accordance with the nature characteristics and requirements of the goods for the whole time of transport.
All losses and damages caused by bad packing or insufficient protection of the goods (on FOB bases) shall be born by the SELLER. Each case shall have a packing list indicating the contract number designation of the equipment. Spare and wear parts will be designated with the words "Spare Parts".

The SELLER will make on each case on the four adjacent sides in indelible clear printed words in English as follows:
A - Contract number
B - Shipping mark
C - Case No.
D - Consignee: MINERGOIMPEKS, RRUGA "MARSEL KASHEN" No. 86
E - Destination seaport: Durres - ALBANIA
F - Gross / Nett weight
G - Measurements: length, width, height (in cm.)
H - Center of gravity referring to goods of weight 5 tons or more which will be marked with its center of gravity and hoistings.

In each case shall be enclosed the following documents:
A - Packing list in two copies
B - Material declaration or quality certificate in two copies.

4.3 30 days prior to the despatch of the goods to the port the SELLER is obliged to inform the BUYER by cable or telex when the goods are ready for despatch to the port.
Within 15 days from the receipt of this notification the BUYER will advise the SELLER the exact arrival date of the vessel to the port.

WZ

The SELLER's notification should indicate contract number, total gross weight, total measurements, detailed list of shipment.

4.4 If the BUYER's vessel fails to arrive at the loading port within 21 days after the noticed date from the BUYER, the SELLER is entitled to put the goods at the BUYER's disposal delivering them to the custody of the BUYER's agent who will issue a warehouse warrant acc. to the BUYER's cost.

However after 21 days the SELLER will be still under the obligation at SELLER's expences and risk to load the goods on board of the vessel immediately after arrival of the vessel at the loading port, according to the instructions of the BUYER.

In the event of the SELLER being unable to effect shipment of goods upon the arrival of the vessel at the loading port all the expences arising such as the dead freight, demurrage charges etc. shall be for the SELLER's account. All expences will be calculated on the bases of the invoices given to the BUYER by the vessel's owner.

4.5 In case the SELLER delays the delivery outside the limit date foreseen under this CONTRACT (for reasons other then Force Majeure) then the SELLER is obliged to pay the BUYER the penalty for each day of delay as follows:

- 0,05 % for the first 30 days
  0,08 % for the second 30 days
  0,12 % for all the other days of delay but to a max. of 5 % of the total value of this CONTRACT with a grace period of 21 days.

The payment of the fines does not release the SELLER from the execution of his contractual obligations.

WZ

229

ARTICLE 5 - TECHNICAL DOCUMENTATION

5.1 The SELLER undertakes to deliver the BUYER the Technical Documentation as per Enclosure 2 in 4 copies in English language.

152.

230

ARTICLE 6 - INSPECTION AND CERTIFICATES

6.1 The SELLER undertake to execute by himself the ordinary inspection tests of the equipment before despatch and to deliver the BUYER a complete inspection report.

6.2 The BUYER is entitled to send his authorised representatives to participate in the inspection tests of equipments. The SELLER undertakes to enable the BUYER's representatives to enter the manufacturer's works or those of his subcontractor's during working hours, for such purpose.

Should any disagreement arise between the BUYER and the SELLER in respect of any equipment which might not be in compliance with the standard of quality, the SELLER will take into consideration the BUYER's observation.

However, in this case the SELLER will be entitled to despatch the goods under his responsibility.

The SELLER will notifiy the BUYER's representatives not later than one month before the end of manufacture the date when the equipment will be ready for final inspection. In case the BUYER's representative fails to arrive in due time, the SELLER has the right to proceed with the inspection tests and despatching as foreseen in this CONTRACT.

The participation fo the BUYER's representatives in the inspection tests shall not free the SELLER from his responsiblity regarding the guarantee of equipment stipulated in this CONTRACT, nor does it substitute the BUYER's inspection at the erection site.

6.3 Required facilities and relevant documentations are free of charge. The safety measures costumarely adopted in the SELLER's plant and applied to SELLER's personnel, shall also be adopted to the BUYER's representatives.

6.4 The BUYER will open the cases at the erection site without the presence of the SELLER's represenatives.

Appendix F-19

Details of losses, shortages or damages or inproper packing will be registered in a record which will be signed by the authorised representatives of the BUYER. The SELLER must be informed immediately. The above record will be the effective evidence for claim for replacement of goods by the SELLER or its refusal by the BUYER.

6.5 In case it is verified that during transportation from Triest to erection site some equipment have been damaged or missing, the BUYER will immediately order the replacement of damaged or missing parts from the SELLER. In this case the expences incurred thereby shall be born by the BUYER, unless it is proved that the damages or losses are caused by inproper packing in which case Article 4.2 will be applied.
In case the expences are to be borne by the SELLER, Article 4.5 is valid.

ARTICLE 7 - TECHNICAL SERVICES

7.1 The SELLER will send his qualified technical personnel to the erection site to carry out the following work:
   a) To check the erection and installation of the compressor, which is to be done by the BUYER's personnel, acc. to SELLER's technical documents.
   b) For putting into operation of the compressor and carrying out of the performance tests as per Article 10.

7.2 The number and the service period are foreseen as follows: In the CONTRACT price included is one specialist for 15 working days. The a.m. number of man/days can be changed only in agreement between the parties.

7.3 The total working time of the SELLER's technical personnel at the erection site will be 40 hours per week, i.e. 8 hours a day from Monday to Friday. Saturday, Sunday and official holidays of country of the BUYER will be holidays for the SELLER's technical personnel.

7.4 Postal, cable and telephone services used in the country of the BUYER by the SELLER's technical personnel are for the account of the SELLER. The expences for the hotel room will be born by the BUYER.

7.5 At the erection site the BUYER will provide the SELLER's technical personnel proper office and transport between their living quarter and erection site and English speaking interpreter.

Appendix F-21

7.7 In case the putting into operation of the compressor is delayed due to the reasons not imputable to the SELLER, an agreement has to be reached between the parties to a new schedule for the work to be executed.

7.8 In case the putting into operation is delayed due to the reasons imputable to the SELLER, the SELLER is obliged to keep at his own expences his technical personnel for such a period the delay is happened.

7.9 The SELLER's technical personnel will abide by the rules regulations and instructions in force in the BUYER's country and will be subject to the discipline in force at the erection site as applicable to the BUYER's personnel.

7.10 The SELLER is obliged that by means of his technical personnel sent to the erection site, to give accurate instructions to BUYER's technical personnel for carrying out the tests of putting into operation, instruction regarding the operation and maintenance of the compressor in order to enable the BUYER to utilise and maintain the compressor.

ARTICLE 8 - ERECTION AND TESTS

8.1 The equipment delivered by the SELLER under this CONTRACT will be erected and installed by the BUYER's technical personnel on the bases and in conformity with the Technical Documentation and Instructions to be supplied by the SELLER.

8.2 Three weeks before the completion of the erection and installation work, the BUYER will inform the SELLER the readiness of the tests for putting the compressor into operation.
The tests for putting into operation consist of:
a) Checking of the installation and erection of the compressor by the SELLER's technical personnel.
b) Putting into operation of the compressor with load
c) The performance tests for taking over of the compressor by the BUYER (acceptance by the BUYER).
All the above mentioned work will be carried out by the SELLER's technical personnel.

After checking of the erection and installation of the compressor the SELLER's technical personnel will inform the BUYER in writing about the eventual remarks and/or the changes to be made and/or the readiness to start with the tests for putting into operation.

The loaded tests will last 3 working days 24 hours each day. If during the tests will be found out defects due to bad quality production of the delivered equipment by the SELLER, by wrong instruction given by him in written form i.e. unprecise technical documentation or instruction given by SELLER's technical personnel than the expences for their elimination will be born by the SELLER.

8.3 Ending the loaded tests the SELLER's technical personnel has to inform the BUYER's representative in writing that the compressor is ready for the performance tests for final taking over by the BUYER.
These tests will last 72 hours without interruption. During all these hours when the compressor has been put into operation in a satisfactory manner the SELLER's and the BUYER's representative will verify the functional parameters defined in Article 10 of this CONTRACT.

Appendix F-23

8.4 If the functional parameters as per Article 10 and Enclosure 1 will be achieved, than the authorised representatives of the parties will sign the record of final taking over (acceptance) of the compressor by the BUYER, where it will be reflected, as well, the results achieved during the tests.

The date of signing of this record will be considered as the date of beginning of the mechanical guarantee of 12 months, max. time will be 18 months after delivery.

8.5 If during the tests the SELLER considers it necessary to carry out changes with the intention that the compressor to be fully in accordance with the contract conditons, he will agree with the BUYER and these changes will be done with the SELLER's expences.

If these changes are connected with supplementary deliveries then these deliveries will be made CIF Tirana airport or CIF Durres seaport / ALBANIA for SELLER's account.

8.6 Changes are only for SELLER's account if equipment of the contractual scope of supply has to be changed (compressor, lube oilfilter, vibration switch).
If changes/repairs have to be done on existing equipment or equipment provided by BUYER all expenses are for BUYER's account.

52

236

ARTICLE 9 - MECHANICAL GUARANTEE

9.1 The SELLER guarantee the normal functioning of the compressor to be supplied according to this CONTRACT as well as all the goods to be completely new, without faults in designing, in raw materials which are provided, produced according to the last word of the technics, with an advanced technology, high quality and working aim of the compressor.

The guarantee period for the compressor that will be delivered by the SELLER according to this CONTRACT, is 12 months from the signing of the Taking Over Record (acceptance by the BUYER) but not more than 18 months from last shipment.

9.2 If defects or faults are found out in the delivered equipment during the mechanical guarantee period, the BUYER. will advise the SELLER by cable or telex for the kind and nature of the defects, describing it shortly as well as his requirements.

The SELLER is obliged to answer the BUYER within 14 days from the date of the receipt of the BUYER's notification for the defects or faults found out, for giving the date of replacement or as the case may be, for giving the BUYER his instructions for the repairing or for notifing the date upon which a specialist will be sent to the site with the mission to eliminate the defect (see also 9.9).

9.3 The SELLER will replace, on his expences and on his account, the defective parts with new ones not later than 40 days from the date of receipt of the BUYER's notification for the occurred defect, except in the case of defects for which the two parties are of opinion that it is needed a longer time for the fabrication or replacement or repairing, but at any case this period should not pass 2 months. During these replacement the SELLER will deliver the small parts by air on delivery conditon CIF Rinas airport Tirana.
The SELLER guarantees that all the replaced parts will be new, unused or as the case may be, repaired correctly and that they will have no defects in designing or due to raw material or production within 12 months period from their replacement date.

Appendix F-25

9.4 In case the SELLER deems it necessary to send his specialist for the elimination of the defects, by replacing or repairing them, he is obliged, after he has got the BUYER's approval, to send to Albania the respective specialist whithin one month from the date of BUYER's notification for the defects. In this case the expences will be born by the SELLER.

9.5 In case the SELLER delays the sending of his specialists for the elimination of the defects, or the sending of the parts according to the above point 9.3 and 9.4 then the BUYER has the right to eliminate them himself or through any third party, but in this case all the resulting expences will be paid by the SELLER based on the invoices sent by the BUYER.

9.6 In case that due to the occurred defect is due to a defect on SELLER's reponsability there is a stoppage of the compressor, the period of the mechanical guarantee will be extanded as long as its functioning is interrupted, that means, from the date when the defect occurred till the date of its elimination.

9.7 Minor defects for which the SELLER has been informed immediately that will be found out during the guarantee period, whose elimination does not need the presence of the SELLER, will be eliminated by the BUYER himself but on the SELLER's account.

9.8 According to the way and the conditons defined in this article the SELLER will eliminate at his own expences and on his account, also the defects or faults and missings found out in the delivered equipment due to the faults occurred in the SELLER's technical documentation or design or technical instructions.

9.9 If the defects have occurred not due to SELLER's fault then the SELLER is obliged to eliminate them as foreseen in the above paragraphs, and all the expences will burden upon the BUYER, see also 9.2.

Appendix F-26

ARTICLE 10 - Performance Guarantee

10.1 The SELLER guarantees the normal functioning and without interruption of the compressor subject to this CONTRACT as well as the achievement of all technical and performance parameters defined in ENCLOSURE 1.

10.2 The achievement of the performance parameters will be verified "with the carrying out performance test" for final taking over (acceptance tests) as defined in ARTICLES of this CONTRACT.

10.3 When during the funtional performance tests the guaranteed performance parameters are achieved in conformity with the definitions of ENCLOSURE 1, then the record of final taking over will be signed as defined in Art. 8.4

22.7.91

10.4 In case during the performance tests due to SELLER's fault the performance parameters are not achieved, the SELLER is obliged to make the necessary arrangements and/or modifications and, if necessary, he will supply the Buyer free of charge with the equipment or parts, that have to be delivered CIF Rinar Airport or CIF Dunes Seaport.
After the arrangements and/or modifications the SELLER will repeat once more the performance tests but not later than 10 days from the day of the first performance test. During this period the expenses for the SELLER's technical personnel will be borne by the SELLER. In case the performance tests are not carried out due to SELLER's fault then he is obliged to pay the BUYER the liquidated damages for the delay as follows:

- 0,05 % of the CONTRACT value for each day of delay starting from the date of the failure of the first performance test.
  These liquidated damages should not be more than 5 % of the total price of this CONTRACT.

10.5 The achievement of the performance parameters defined in ENCLOSURE I, will be verified by means of the measuring aparatus installed on the compressor, while the flow will be measured by the exisiting aparatus installed at BUYER's erection site.

239

Appendix F-27

10.6 In case that after the repeated tests the SELLER is not in the position to comply with the performance parameters as defined in ENCLOSURE 1, technical data (due to SELLER's fault) the BUYER reserves the right to terminate the contract and the SELLER is obliged to pay the BUYER 20 % of the total value of the CONTRACT as liquidated damages and to refund all the payments received by the SELLER from the BUYER upon return of the delivered equipment at SELLER's disposal.

10.7 Prior to performance test all instruments have to be calibrated. The performance test has to be carried out acc. to VDI 2045.

10.8 Operating conditions are at compressor flange. SELLER is not responsible for performance of equipment not in the scope of supply (oil cooler, gas cooler, dampers + separators, piping instrumentation, safety devices, etc.)
If performance data do not match contractual data because of accessories or improper installations SELLER cannot be held responsible.

10.9 In addition to 10.6, under no other circumstances can the SELLER's liablility be extended to indirect or consequential damages.

52

240

ARTICLE 11 - SPARE AND WEAR PARTS

11.1 Spare and wear parts included in the total value of the CONTRACT, are specified and listed in Enclosure 3.

The spare and war parts will be delivered together with the equipment.

ARTICLE 12 - Relief from responsibility of the parties in case of force-major

12.1 The parties are released from their responsibility partially or fully of the execution of the CONTRACT if after the coming into force of this CONTRACT force-major-circumstances occur such as fire, flood, earthquakes or other similar circumstances which are unforeseen, unavoidable and extraordinary.

There are excluded from force-major-circumstances the non-issue of export licence or withdrawal of technological licences by the SELLER as well as the non-fulfillment of the obligations form the third parties which may have connection with the fulfillment of this CONTRACT.

The SELLER is obliged to instantly advise the BUYER of the occurance of any force-major-circumstances.

12.2 In case of Force Majeure the SELLER has the right to suspend or to reduce the delivery of the goods or services subject of this CONTRACT or to prolong or extend the delivery time if these circumstances accur during carrying out of any of respective schedule of delivery and technical services under this CONTRACT.

12.3 If the said Force Majeure will not allow the BUYER to take over the goods or to proceed with the erection, installation or putting into operation of the equipment subject of this CONTRACT within the times foreseen, the BUYER has the right to extend or suspend the CONTRACT times of obligations affected by these circumstances if they occur during the carrying out of any respective schedules of the CONTRACT.

The BUYER is obliged to promptly advise the SELLER of the occurence of Force Majeure Circumstances.

12.4 The occurance and termination of Force Majeure circumstances must be evidenced by the relevant Chamber of Commerce of the country affected by Force Majeure circumstances and notified to the other party by cable or telex within 5 days from the occurance and within 45 days by registred mail with a detailed certificate issued by the Chamber of Commerce in this country.

Appendix F-30

12.5 After the termination of the Force Majeure circumstances the parties are obliged to negotiate the continuation or the termination of the unfullfiled contractual obligations.

12.6 Each of the parties has the right to give up the further fullfilment of the CONTRACT in case the a.m. Force Majeure circumstances exceed 180 days.

In these cases non of the parties has the right to take sanctions against the other.

52

Appendix F-31

ARTICLE 13 - ARBITRATION

13.1 The parties will try to solve with well understanding any disagreement that may arise out during the implementation of this CONTRACT or in connection with it.

In case an agreement can not be reached the dispute will finaly be settled under the rules of consilation and arbitration of the Chamber of Commerce in Paris by three Arbitrators appointed in accordance with the Rules.

13.2 The arbitration shall meet in Geneva/Switzerland. Swiss Civil Code (Code of Obligations) will be applied.

13.3 The arbitral award shall be final and subject to no apel.

ARTICLE 14 - GENERAL CONDITONS

14.1 If during the implementation of this CONTRACT both parties deem it necessary to change any of its dispositions that will be made in writing. This change will be an integral part of the CONTRACT and signed by authorised representatives of both parties.

14.2 All taxes and duties partening to the implementation of this CONTRACT and contractual obligations outside the Republic of Albania, whether now or in the future, shall be born by the SELLER.

14.3 Neither of the parties shall have the right to unilaterlly terminate this CONTRACT except in case of Force Majeure circumstances according to Article 11 of this CONTRACT.

In case this CONTRACT will be unilaterally terminated by the SELLER, except by reasons of Force Majeure, then he is obliged to pay the BUYER 20 % of the total value of this CONTRACT as Liquidated Damages and to refund all the payments received by the SELLER from the BUYER upon return of the delivered equipment at the SELLER's disposal at Triest seaport.

In case this CONTRACT will be unilaterally terminated by the BUYER also due to continuos non-fulfillment of contractual obligations of the BUYER, except by reasons of Force Majeure, then he is obliged to pay the SELLER 20 % of the total value of this CONTRACT as Liquidated Damages and to pay remaining parts of delivered equipment.

14.4 This CONTRACT enters into force on the date of its signature by the authorised representatives of the parties. Every modification within the frame of this CONTRACT will be made by registered letter in English language.

The SELLER's address:
SULZER BURCKHARDT
ENGINEERING WORKS LTD.
LABYRINTH-PISTON COMPRESSORS
CH-8404 Winterthur
Switzerland

The BUYER's address:
MINERGOIMPEKS
Rruga "Marsel Kashen" Nr. 86
Tirana
Albania

LJR

245

0506/WZ/Ma
17.07.91
Page 24

Appendix F-33

22.7.91

14.5 The attached Enclosure from ~~SELLER's General Conditions of Traction~~ 1 to 3 (inclusive) are integral part of this CONTRACT.

14.6 This CONTRACT is drawn up in English language in 4 exemplars out of them the Buyer will receive 2 and SELLER 2.

Done and signed in Winterthur, 17th July 1991.

The text of this CONTRACT is composed of 24 pages (without enclosures), with enclosures 29 pages.

The SELLER:

ppa. M. Heller

The BUYER:

Dipl. Ing. M. Mema

ENCLOSURE 1 of the CONTRACT No. 082/CO-AF/91.M

DATAILED DESCRIPTION:

1. TECHNICAL PART

1.1 OPERATING DATA FOR LABY TYPE 4D225-3A BASED ON 1964-DESIGN FOR THE SAME COMPRESSOR TYPE

		1	2	3
STAGE				
RELATIVE HUMIDITY	0/0	100.00	100.00	100.00
MOLE WEIGHT	KG/KMOL	31.4	31.7	32.0
CP/CV AVERAGE		1.385	1.381	1.393
SUCTION PRESSURE	BAR ABS	* 1.000	CA.3.2	CA.12.3
SUCTION TEMP.	DEG C	31.0	40.0	40.0
DISCHARGE PRESSURE	BAR ABS	CA.3.4	CA.12.5	45.400 *
DISCHARGE TEMP.	DEG C	CA.160	CA. 185	CA.177
MASS FLOW, HUMID	KG/H	3586	3540	3506
FLOW (OC,1.0313 BARA)H	NM3/H	2556	2499	2456
SUCTION VOLUME,HUMID	M3/H	2885	907	231
POWER CONSUMPTION	KW	172	176	156

TOT.POWER INPUT	KW	505		
RECOMM. MOTOR POWER	KW	580		
SPEED	MIN-1	490.0		
TOLERANCE ON SUCTION VOLUME AND POWER CONSUMPTION	0/0	+/-5.0		

* at compressor flange

LS

1.2 COMPRESSOR DESIGN MATERIALS

CRANK CASE	CAST IRON
CRANK SHAFT	FORGED STEEL
CONNECTING ROD	FORGED STEEL
CROSSHEAD	NODULAR CAST IRON, BABBITT LINED
PISTON ROD	NITRATED STEEL, SURFACE HARDENED
PISTON ROD GLAND RINGS	GRAPHITE
VALVE PARTS	STAINLESS STEEL
PISTON SKIRT	BRONZE
PISTON COVERS	NODULAR CAST IRON, COPPER PLATED
DISTANCE PIECE	CAST IRON
CYLINDER BLOCK	CAST IRON
CYLINDER COVER	CAST IRON

1.3 GENERAL DATA

- THE COMPRESSOR WILL BE SUPPLIED WITH METRIC THREADS
  - CRANK CASE WITH CYLINDER BLOCK COMPLETELY ASSEMBLED
  - PISTON AND PISTON ROD GLAND SEPARATELY
  - NEW DESIGNED CROSS HEADS, GUIDE BEARINGS, CONNECTING RODS WITH HYDRAULIC TENSIONING DEVICE

- THE COMPRESSOR OIL SUMP HAS A CAPACITY OF APPROX. 270 L, WITHOUT OIL COOLER DOUBLE OIL FILTER AND OIL PIPING)

1.4 EXTENT OF SUPPLY

1.4.1 - 1 OILFREE LABYRINTH PISTON COMRPESSOR TYPE 4D225-3A SEPARATE OIL SUMP OF GREY CAST IRON. CRANKCASE WITH OPEN DISTANCE PIECE, CRANKSHAFT AND CONNECTING RODS, CROSSHEADS WHITE METAL LINED. PISTON ROD GUIDE BEARINGS WHITE METAL LINED. PISTON RODS SURFACE HARDENED. CYLINDER BLOCK WITHOUT CYLINDER LINERS. PLATE VALVES AND GAS CONNECTIONS MOUNTED LATERALLY ON THE CYLINDER BLOCK. WATER COOLING JACKETS PROVIDED FOR CYLINDER BLOCK AND COVERS, CROSSHEAD GUIDES, PISTON ROD GUIDE BEARINGS.

- 1 LUBRICATING OIL SYSTEM COMPRISING:
  - 1 MAIN OIL PUMP DRIVEN BY THE CRANK SHAFT
  - 1 OIL SIEVE MOUNTED IN THE COMPRESSOR CRANKCASE
  - 1 DOUBLE OIL FILTER WITH CASING MADE OF CAST IRON AND CHANGOVER DEVICE. NO INSPECTION REQUIRED
  - 1 SET OF INTERNAL OIL PIPES MADE OF CARBON STEEL, MOUNTED ON THE COMRPESSOR
  - 1 PRESSURE GAUGE, 1 TEMPERATURE GAUGE, 1 LEVEL SIGHT GLASS AND 1 PRESSURE RELIEF VALVE, ALL MOUNTED IN OR ON THE COMPRESSOR
  - 1 DRAIN PLUG

- 1 SET OF PRESSURE GAUGES FOR GAS, COMPRESSOR MOUNTED

- 2 VIBRATION SWITCHES VSH FABR. ROBERSHAW, COMPRESSOR MOUNTED,(ONE FOR EACH INSTALLED COMPRESSOR) ANNUNCIATOR IN CUSTOMERS PANEL

- STANDARD PAINTING FOR INDOOR INSTALLATION

- 1 SET OF INTERNAL COOLING WATER PIPING AND CONNECTIONS ON THE COMPRESSOR

- 1 SET OF INTERNAL PIPES FOR GAS AND CONNECTIONS ON THE COMPRESSOR
- 1 SET OF COUNTER FLANGES WITH STUB ENDS FOR GAS. STUB END ON SUCTION AND DISCHARGE SIDE MADE OF STAINLESS STEEL
- 1 SET OF FOUNDATION BOLTS
- 1 SET OF SPARE PARTS FOR ERECTION AND RUNNING-IN
- 1 SET OF SPECIAL TOOLS
- 4 INSTRUCTION MANUALS IN ENGLISH LANGUAGE
- COMPLETE ASSEMBLY, BARRING-OVER TEST OF THE COMPRESSOR MADE IN OUR WORK SHOP
- ENGINEERING WORK FOR BARE COMPRESSOR

1.4.2 NOT INCLUDED ARE:

- DISTANCE PIECE COVERS
- FLYWHEEL, FLYWHEEL GUARD AND BARRING OVER BAR
- DRIVING MOTOR
- COUPLING
- ELECTRICAL PANEL AND WIRING
- MAIN SWITCH GEAR AND PROTECTIVE MOTOR SWITCH
- SAFETY AND INDICATING INSTRUMENTS
- SUPPORT STRUCTURES
- PIPING-SYSTEM FOR GAS, WATER, OIL, OUTSIDE OF COMPRESSOR
- X-RAYING AND ULTRASONIC TESTS
- COOLERS AND PULSATION DAMPERS FOR GAS
- VALVES FOR GAS, OIL AND WATER, NON RETURN VAVLES FOR GAS AND OIL
- PRELUBE OIL PUMP
- OIL COOLER
- LUBRICATING OIL
- FOUNDATION AND CIVIL ENGINEERING
- FINAL PAINTING AT SITE
- PROTECTING WALLS, SOUND INSULATION, PLATFORMS, RAILS AND FLOOR PLATES
- STEEL FRAME
- PULSATION STUDY
- NOT INCLUDED ARE PARTS, ACCESSORIES AND WORK WHICH ARE NOT MENTIONED IN PARAGRAPH 1.4.1

2.1 PRICE FOR 1 BARE COMPRESSOR TYPE 4D225-3A AS DESCRIBED IN PARAGRAPH 1.4, UNPACKED EX WORKS	SFR. ~~480'455.--~~ 509'500.-- 3.35
2.1.1 SEA-PACKING AND RAIL-RESP. TRUCKTRANSPORTATION FOR 1 COMPRESSOR FOB TRIEST ACC. TO INCOTERMS 1980	INCL.
2.1.2 TECHNICAL SERVICE, RUNNING IN, TESTS, INSTRUCTIONS INCL. ONE FLIGHT ZÜRICH-TIRANA-ZÜRICH	INCL.

Appendix F-37

ENCLOSURE 2 of CONTRACT No. 082/CO-AF/91.M

Technical Documentation - Supply of the SELLERn

1. Instruction manual for erection, operation and maintenance, including spare parts document.

   In 4 copies in English language.
   To be delivered together with the compressor.

WR.

Appendix F-38

ENCLOSURE 3 of CONTRACT No. 082/CO-AF/91.M

Spare parts for Labyrinth-Piston Compressor, Type 4D225-3A
Masch. No. 6351/52 / UZINA GOGO NUSHI, FIERI AL

1 x 1	Piston rod packing chamber	4001	1 x 517.00
1 x 3	Piston rod packing chambers	4002	1 x 1'302.00
3 x 1	Piston rod with key	4701	3 x 6'620.00
1 x 1	Piston skirt 3rd stage D 200	2302	1 x 2'700.00
3 x 4	Upper oil scraper ring compl. D 83/75	4503	3 x 1'160.00
3 x 4	Middle oil scraper ring compl. D 83/75	4504	3 x 1'160.00
3 x 4	Lower oil scraper ring compl. D 83/75	4505	3 x 1'160.00
2 x 32	Valve disc 1st stage D 176 5056+	5006	2 x 3'712.00
3 x 16	Valve disc 2nd stage D 156 5156+	5106	3 x 2'240.00
4 x 8	Valve disc 3rd stage D 156 5256+	5206	4 x 1'120.00
2 x 32	Damper disc 1st stage D 176 5057+	5007	2 x 3'123.00
2 x 16	Damper disc 2nd stage D 156 5157+	5107	2 x 1'952.00
2 x 8	Damper disc 3rd stage D 156 5257+	5207	2 x 976.00
		Total	69'500.-- ~~65'545.00~~

3.3.93

Appendix G

Spare Parts

Train 1. Spare Parts Requested by FN and Estimated Cost

	Quantity	Total Cost
Compressors and Pumps		
Oxygen Compressor		
Piston rod-labyrinth ring	24	240
Piston rod-labyrinth ring	20	200
Piston rod	4	32,000
Cylinder body	1	150,000
Expansion Turbine		
Nozzle ring	1	7,000
Impeller	1	8,000
Conic sealing sleeve	4	400
Piston Pump		
"V" form gasket	240	120
"V" form gasket	240	120
Screw compressor type LG 63Cx2 63D		
Sealing carbon ring (LG63C I-13-11-04)	100	100
Sincr. gear I stage (LG63C 17-06-00) passive	4	400
Sincr. gear I stage (LG63I 13-16) active	2	200
Sincr. gear II stage (LG63D 03-02) passive	4	400
Sincr. gear II stage (LG63D 02-01-00) active	2	400
Steam turbine CR/200		
Stationary dummy ring 14/2 to 14/10	1	20,000
Steam seal sleeve 16/1 to 16/14	1	20,000
Centrifugal compressor type GMCP-654 CR/2174:		
Oil filter	4	400
Air filter	64	1,280
Crank shaft for air compressor 2.67/150 HR viz N1-000		
Oxygen pump 135/15-TO2	1	2,000
Serial No. 5422 15423 OP/174		
Mechanical seal body (complete)	10	2,000
Pump-Turbine unit (Riva-Calcone)		
Teflon tube for turbine blades	40	2,400
Washer coated in front side with teflon 43.8/26.2x1.5	20	3,000
Spiral casing (body)	2	40,000
Pump HDB 100/11 VR 3.158 PC1-1R/175		
Gaskets "Europie" for intermediate elements	66	660
Support	2	4,000
Air elements of fibridoid type		800
Filtering elements (candeles) for FM/200		900
Filtering elements (NH_3) for FM/200 1100x75 mm		900

(Continued)

Train 1. Spare Parts Requested by FN and Estimated Cost
(Continued)

	Quantity	Total Cost
Valves and Plates		
Stainless steel 1000x600 0.4 mm	18 m^2	14,400
Stainless steel 0.1 mm	18 m^2	14,400
Valves for NH_3 ½ inch PN10	200	2,000
DN50 PN16	5	350
DN32 PN16	5	300
DN25 PN16	5	300
DN15 PN16 AISI347	5	300
DN80 PN16	5	500
Stainless steel AISI347 valves	4	400
Instruments		
Multipoint Recorder Arucomp EK. Six (6) measuring points. One (1) measuring range. Miniature potentiometer pyrometer. Measuring range: 0 to 600°C. Calibrated for: Thermocouple nickel chrome-nickel alloy. Measuring range in electrical units 24.91 mV. Power supply 115 V and 230 V, 50 Hz. Class 0.5. With automatic compensation.	6	6,000
Multipoint Recorder Arucomp EK. Six (6) measuring points. One (1) measuring range. Miniature potentiometer pyrometer. Measuring range: 0 to 1600°C. Calibrated for: Thermocouple Pt - PtRo EL 18 (18%). Measuring range in electrical units 11.267 mV. Power supply 115 V and 230 V, 50 Hz. Class 0.5. With automatic compensation.	1	1,000
Multipoint Recorder Arucomp EK. Six (6) measuring points. One (1) measuring range. Miniature potentiometer pyrometer. Measuring range: 0 to 1100°C. Calibrated for: Thermocouple nickel chrome-nickel alloy. Measuring range in electrical units 45.16 mV. Power supply 115 V and 230 V, 50 Hz. Class 0.5. With automatic compensation.	4	4,000
Multipoint Recorder Arucomp EK. Six (6) measuring points. One (1) measuring range. Miniature potentiometer pyrometer. Measuring range: 0 to 200°C. Calibrated for: Thermocouple nickel chrome-nickel alloy. Measuring range in electrical units 8.13 mV. Power supply 115 V and 230 V, 50 Hz. Class 0.5. With automatic compensation.	1	1,000

(Continued)

Train 1. Spare Parts Requested by FN and Estimated Cost
(Continued)

	Quantity	Total Cost
Instruments (Continued) Recorder Minicomp EK. Single point potentiometer pyrometer. One measuring range. Measuring range 0 to 1000°C. Calibrated for thermocouple units 11.267 mV. Power supply 115 V and Nickel Chrome-Nickel alloy. Measuring range in electrical units 41.31 mV. Power supply 115 V and 230 V, Class 0.5. Automatic compensation.	1	1,000
Recorder Minicomp EK. Single-point voltmeter potentiometer. One measuring range 0 to 5 mV. Graduation 0% to 8% vol CO_2. Measuring range in electrical units 0 to 5 mV. Power supply 115 V and 230 V, 50 Hz. Class 0.5. Automatic compensation.	1	900
Recorder Minicomp EK. Single-point voltmeter potentiometer. One measuring range 0 to 5 mV. Graduation 0 to 100 ppm O_2. Measuring range in electrical units 0.5 mV. Power supply 115 V and 230 V, 50 Hz. Class 0.5. Automatic compensation.	1	900
Recorder Minicomp EK. Single-point voltmeter potentiometer. One measuring range 0 to 2.2 mV. Graduation 97% to 100% Volume O_2. Measuring range in electrical units 2.2 mV. Power supply 115 V and 230 V, 50 Hz. Class 0.5. Automatic compensation.	1	900
Multipoint Recorder Arucomp EK. Six (6) measuring points. One (1) measuring range. Measuring range: 0 to 5 mV. Graduation 0% to 25% Volume NH_3. Measuring range in electrical units 5 mV. Power supply 115 V and 230 V, 50 Hz. Class 0.5. With automatic compensation.	1	900
Recorder Arucomp EK. Six (6) point potentiometer voltmeter. One measuring range 0 to 5 mV. Graduation 60% to 80% Volume H_2. Measuring range in electrical units 5 mV. Power supply 115 V and 230 V, 50 Hz. Class 5.	1	900
Recorder Arucomp EK. Six (6) point potentiometer voltmeter. One measuring range 0 to 5 mV. Graduation 0% to 10% Volume CO. Measuring range in electrical units 5 mV. Power supply 115 V and 230 V, 50 Hz. Class 5.	1	900

(Continued)

Train 1. Spare Parts Requested by FN and Estimated Cost
(Continued)

	Quantity	Total Cost
Instruments (Continued)		
Recorder Arucomp EK Six (6) point Wheatstone bridge thermometer. One measuring range from -170°C to -50°C. Calibrated for platinum resistor 100 ohms at 0°C. (Norme DIN 43.760). Power supply 115 V and 230 V, 50 Hz.	2	1,800
Recorder Arucomp EK Six (6) point Wheatstone bridge thermometer. One measuring range from -20°C to +50°C. Calibrated for platinum resistor 100 ohms at 0°C. (Norme DIN 43.760). Power supply 115 V and 230 V, 50 Hz.	1	900
Recorder Arucomp EK Six (6) point Wheatstone bridge thermometer. One measuring range from 0°C to + 250°C. Calibrated for platinum resistor 100 ohms at 0°C. (Norme DIN 43.760). Measuring range in electrical units 94.13 ohms. Power supply 115 V and 230 V, 50 Hz.	2	1,800
Elcoflux C5 (Sauerstoffspurenanalysator) (trace oxygen analyser). Measuring ranges: 0 to 100 ppm O_2; 0 to 1000 ppm O_2; 0 to 3000 ppm O_2. Standard signal outlet 0 to 5 mV. Power supply 115 V and 230 V, 50 Hz.	1	1,500
Light weight forged body valves with needle ½ inch NPT, Model 2-V304:		
Model 2-V304B-2N/PN 100 ASTM A105 zinc plated body material, trim with plug to turn on stem (needle type). Plug material 316 stainless steel. Stem material ASTM A182.	40	2,800
Model 2-V304C-2N/PN100. Body material AISI 316SS, plug material AISI 316SS, stem material AISI 316SS.	20	1,400
Model 2V304B-2N/PN 400. Same specs as model 2V304B-2N/PN 100 but for a rating of PN 400.	20	1,400
Differential pressure transmitter with a maximum operating pressure of 100 kg/cm^2. Span adjustable from 250 to 17,000 mm H_2O Deltapi N-AA.	10	8,000
Platinum resistor thermometer P6.	80	1,600
Platinum resistor thermometer P6D.	40	800

(Continued)

Train 1. Spare Parts Requested by FN and Estimated Cost
(Continued)

	Quantity	Total Cost
Instruments (Continued) Misuratore a rota ovale arov bopp reuther. Tipo O.A.P 125R5/G2, DN 65 PN 40 NF 11241. Minimum 100 liters, maximum 500 liters for ammonia. Erogazione al minuto primo.	3	4,500
B.B.C. SS78-006/SR83-100 Deltapi N transmitter. Code NEA/9900010101. Span limits 70 to 700 kg/cm^2. Iden/Kollon 1/84 V. Out 3 to 15 lb/in^2. Supply 20 lb/in^2. Range 700 kg/cm^2. Material (body) AISI 316, diaphragm AISI 316, separators diafrgm AISI 316L, temperature 120°C.	3	3,000
Total Train 1		378,770

Train 2. Spare Parts Requested by FN and Estimated Cost

	Quantity	Total Cost
Compressors and Pumps		
Compressor (N_2 + H_2)		
Piston rod second stage	3	21,000
Piston rod third stage	3	21,000
Brick first quality for burners shaped with four holes.	5 mt	2,500
Small shaped light bricks for burners.	1 mt	600
Superaluminated refractory cement.	1 mt	200
Epoxy resin	1 mt	1,000

All Trains–Total Complex. Spare Parts Requested by the FN and Estimated Cost

Item Description	Quantity	Total Cost
Tools and Machinery		
Argon arc welding machine for alloy aluminum sheets in thickness up to 20 mm and for stainless steel with all accessories	1	20,000
Hand electric angle grinding machine 220 V, 50 Hz, power ~2Kw, for grinding and cutting for metal sheets and other materials and their welding seams.	10	500
Abrasive discs for above-mentioned machines	200	1,000
Pressure reducer for oxygen cylinder pressure ratio of 150:5	10	150
Tube expanders for heat exchanger using tubes ⌀ 18x2.5 mm, ⌀ 20x2 mm, ⌀ 25x2.5 mm[a]	6	60
Hand electric drilling machine, 220 V, 50 Hz 13 mm bore and 20 mm bore	6	300
Hand electric drilling machine with electric motor for either alternate current 220/110 V or direct current 36 V:		
6 mm bore	10	400
12 mm bore	6	300
Digital electronic thermometer; operating range between -50°C and 1200°C	2	100
Lubricant handpump	5	50
Direct current welding machine for 15 Kw provided with all necessary accessories	3	45,000
Hoist 1, 2, 3, and 5 ton	10	3,000
Fork crane truck, 2 mt, with internal combustion engine, provided will all necessary accessories, tools, and spares	3	24,000
Three-jaw self-centering chuck ⌀ 200, ⌀ 240, and ⌀ 320	10	1,000
Circular inclinable dividing table ⌀ 500	2	300
Impact tool wrench, size 588	2	100

(Continued)

All Trains–Total Complex. Spare Parts Requested by the FN and Estimated Cost
(Continued)

Item Description	Quantity	Total Cost
Tools and Machinery (Continued) Silicon carbide rods ⌀ 22x250, ⌀ 14x200, ⌀ 22x250 for high temperature furnace model RJx#14-#13	48	960
Friction discs for lathe-type OMG 300	2	100
Main bearing for lathe spindle-type OMG 300	2	80
Double open wrench	20	1,000
Diamond glass-cutter	10	100
Paint spraying pistol	10	100
Digital wall thickness meter (for metals) measuring range 1.2 to 300 mm	1	300
Oxy-acetylene welding torch	4	1,000
Oxy-acetylene cutting torch	4	1,000
X-ray metal-checking machine, operating range 0 to 50 mm, provided with all necessary accessories and tools	1	10,000
Hand pump for lime-water painting	2	200
Hand electric concrete drilling machine, 220 V 50 Hz bore of 6 to 20 mm	3	150
Automatic universal grinding machine: Max outside diameter of working piece of 600 mm Min inside diameter of working piece of 40 mm Distance between centers of 3000 mm Max depth of inner grinding of 300 mm Provided with all accessories and tools	1	100,000
Films (X-ray safety film D7pb, Agfa-Gevaert 480x100)	100	500
Film developer	10	100
Chemical analyser of metals	1	10,000
Cylinder for photocopying machine type Xerox-1025	2	400

(Continued)

All Trains–Total Complex. Spare Parts Requested by the FN and Estimated Cost
(Continued)

Item Description	Quantity	Total Cost
Miscellaneous Materials		
"Klinger" Gasket for steam valves		
"O" ring form		
DN 10 PN	30	30
DN 15	50	50
DN 20	30	30
DN 25	30	30
DN 32	20	20
DN 40	20	20
DN 50	30	30
DN 80	30	30
DN 100	30	30
DN 125	30	30
DN 150	30	30
Amianti rope with teflon:		
6x6	10 kg	200
8x8	10 kg	200
10x10	50 kg	1,000
12x12	15 kg	300
14x14	20 kg	400
Grafit saturated rope ⌀ 20	100 kg	2,000
Antiacid gasket 2000x1000x2 mm	50 kg	50
Antiacid gasket 2000x1000x3 mm	80 kg	80
Klinger gaskets for steam valves range 200°-400°C		
2000x1000x2 mm	60 kg	30
2000x1000x3 mm	80 kg	40
"Superflex" Spiral wonded gasket:		
AISI 316 ⌀ 1538/⌀ 1500x4.76	4	40
AISI 316 ⌀ 732/⌀ 652x4.76	4	40
AISI 316 ⌀ 646/⌀ 588x3.5	6	60
AISI 316 ⌀ 547/⌀ 522x3.5	4	40
AISI 316 ⌀ 1333/⌀ 1302x3.5	6	60
AISI 316 ⌀ 1092/⌀ 1032x4.76	10	100
AISI 316 ⌀ 880/⌀ 810x4.76	4	40
AISI 316 ⌀ 655/⌀ 610x3.56	5	50
AISI 316 ⌀ 542/⌀ 514x3.5	5	50

(Continued)

All Trains–Total Complex. Spare Parts Requested by the FN and Estimated Cost
(Continued)

Item Description	Quantity		Total Cost
Miscellaneous Materials (Continued)			
Teflon gaskets			
2000x1000x2 mm	50	kg	250
2000x1000x3 mm	80	kg	400
"Dewcon" paste	10		500
"Molycote" paste	2	kg	20
Asbestos sheet:			
1000x1000x3 mm	100	kg	100
1000x1000x5 mm	100	kg	100
Sandpaper:			
No. 400	100		50
No. 200	100		50
Rubber belt conveyer			
800x12x400 mL	400	m	40,000
800x10x80 mL	80	m	8,000
600x10x30 mL	30	m	3,000
400x10x30 mL	30	m	2,100
Trapezoid belt:			
3100x17 mm	25		500
1700x17 mm	16		320
1500x17 mm	16		320
Conveyer belt 120°C, 150 mL, 10 m	150	m	15,000
Conveyer belt ET1/313, 120°C, 2500 mm, 10-15 mm	13.4	m	5,000
Carbon steel sheet 16 Mn R			
6000x1500x5 mm	800	kg	400
2000x1000x10 mm	1,200	kg	600
Stainless steel sheet AISI 304 L			
2000x1000x1 mm	300	kg	300
2000x1000x2 mm	500	kg	500
6000x1500x5 mm	1,000	kg	1,000

(Continued)

All Trains–Total Complex. Spare Parts Requested by the FN and Estimated Cost
(Continued)

Item Description	Quantity		Total Cost
Miscellaneous Materials (Continued)			
Stainless steel sheet AISI 316 L			
4000x1500x12 mm	2,000	kg	2,000
2000x1000x3 mm	800	kg	800
4000x2000x8 mm	2,000	kg	2,000
Stainless steel sheet Cr20 Mn9 Ni2 Si2Ni 2000x1000x5 mm	1,000	kg	1,000
Stainless steel sheet 3Cr13 400 series			
1000x1000x2 mm	400	kg	320
1000x1000x1 mm	500	kg	400
Carbon steel sheet 30G-MnSiAl			
1000x1000x3.5 mm	400	kg	320
1000x1000x5	800	kg	560
Stainless steel bars:			
AISI 321 ⌀ 30 mm	500	kg	500
AISI 316L ⌀ 40 mm	500	kg	750
AISI 316L ⌀ 145 mm	600	kg	900
AISI 431 ⌀ 20 mm	500	kg	500
AISI 431 ⌀ 35 mm	500	kg	500
AISI 431 ⌀ 60 mm	400	kg	400
AISI 431 ⌀ 70 mm	500	kg	500
AISI 431 ⌀ 100 mm	500	kg	500
30 Cr Mo ⌀ 30 mm	500	kg	400
30 Cr Mo ⌀ 40 mm	500	kg	400
40 Cr Mo ⌀ 30 mm	300	kg	240
40 Cr Mo ⌀ 50 mm	300	kg	240
12 CrNi3A ⌀ 30 mm	500	kg	400
12 CrNi3A ⌀ 60 mm	500	kg	400
AISI 50x50x1.5	1.5	m^3	3,000
Tubes with cleanness and precision in outer surface for heat exchangers			
⌀ 19x2.5x5000 mm 20K	4.5	mt	3,150
⌀ 19.05x2.77x6100 mm	7.4	mt	5,180
⌀ 27x1.5x2000 mm 480	480		7,200
Carbon steel tubes Mark 16-18CrMo			
⌀ 44.5x3.5 mm	3.5	mt	2,800

(Continued)

All Trains–Total Complex. Spare Parts Requested by the FN and Estimated Cost
(Continued)

Item Description	Quantity		Total Cost
Miscellaneous Materials (Continued)			
Carbon steel tubes Mark 20K			
⌀ 25x2.5x4800 mm	3.5	mt	2,450
Stainless steel tubes AISI 321			
AISI 321 ⌀ 14x1.5x5000	1.5	mt	2,300
Tubes with cleanness and precision in outer surface for heat exchangers			
AISI 347 ⌀ 20x2x4600 mm	4.0	mt	6,000
AISI 347 ⌀ 20x2x6000 mm	6.5	mt	9,750
AISI 347 ⌀ 25x2.5x5110 mm	8.0	mt	12,000
AISI 321 ⌀ 38x3.5x6000 mm	3.2	mt	4,800
AISI 321 ⌀ 14x3x6000 mm	6.0	mt	9,000
AISI 310 ⌀ 25x2.5x6600 mm	4.2	mt	21,000
AISI 316L ⌀ 159x4.5 5m	1.5	mt	3,750
Carbon steel tube Mark 20g			
⌀ 33.7x2.5:3.2 mm	800	kg	640
⌀ 48.3x2.9:3.6 mm	900	kg	720
⌀ 57x3.6 mm	900	kg	720
⌀ 60.3x3.6 mm	900	kg	720
⌀ 88.9x3.6 mm	1.3	mt	1,040
⌀ 114.3x4.5 mm	1.5	mt	1,200
Electrodes:			
EVB-50 ⌀ 3.2 mm	500	kg	500
EVB-50 ⌀ 4.0 mm	300	kg	300
EB121 ⌀ 3.2 mm	300	kg	300
OK61-30 ⌀ 3.2 mm	300	kg	1,200
AlMg18F ⌀ 4 : 5 mm	200	kg	600
AISI304L ⌀ 3.2 mm	200	kg	800
AISI304L ⌀ 4.0 mm	300	kg	1,800
AISI34F ⌀ 3.2 mm	300	kg	1,200
AISI34F ⌀ 4.0 mm	200	kg	800
AISI310 ⌀ 3.2 mm	200	kg	800
AISI310 ⌀ 4.0 mm	200	kg	800
AISI316L ⌀ 3.2 mm	300	kg	1,200
AISI316L ⌀ 4.0 mm	400	kg	1,600
Incoweld A ⌀ 3.2 mm	500	kg	500
Steelite bars ⌀ 5.0 mm	100		1,000

(Continued)

All Trains–Total Complex. Spare Parts Requested by the FN and Estimated Cost (Continued)

Item Description	Quantity		Total Cost
Miscellaneous Materials (Continued)			
Soldering powder:			
for cast iron	20	kg	200
for aluminum	20	kg	200
of Cr_2O_3 (cromium anhydride)	400	kg	4,000
Welding glasses	100		100
Impregnated black teflon, 77.5% P.T.F.E., 17.5% SiO_2, 5% grafite			
⌀ 85/35/300	40	kg	200
⌀ 130/65/300	40	kg	200
⌀ 425/385/100	100	kg	500
⌀ 475/385/100	70	kg	350
⌀ 805/745/90	150	kg	750
Carbon (grafite) tubes FE45-Y2 FE44-22/75 (9002) OSE FE 45A (9003)			
⌀ 18/35x200	10	kg	50
⌀ 25/40x200	10	kg	50
⌀ 30/60x200	10	kg	50
⌀ 35/50x200	10	kg	50
⌀ 35/65x200	10	kg	50
⌀ 40/55x200	10	kg	50
⌀ 48/60x200	10	kg	50
⌀ 50/75x200	10	kg	50
⌀ 55/85x200	10	kg	50
⌀ 70/100x200	15	kg	75
⌀ 70/105x200	30	kg	150
⌀ 80/120x200	20	kg	100
Nylon tubing			
⌀ 125/95x250	50	kg	250
⌀ 145/120x250	50	kg	250
White aluminum paint	1	mt	1,000
Antirust paint	5	mt	7,500
Grey oil paint	5	mt	5,000
Antiacid paint	1	mt	1,200

(Continued)

All Trains–Total Complex. Spare Parts Requested by the FN and Estimated Cost (Continued)

Item Description	Quantity		Total Cost
Miscellaneous Materials (Continued)			
Linseed oil	500	kg	300
Diluent	500	kg	250
Sodium fluorosilicate	10	kg	1.5
Ammonium salt	10	kg	3.0
Tin	50	kg	500
Middle length fiber asbestos	100	kg	60,000
Carpenter's glue	100	kg	1,500
Asbestos tress rope:			
⌀ 12	200	kg	2,000
⌀ 16	200	kg	2,000
⌀ 20	300	kg	6,000
Asbestos sheet:			
3 mm	300	kg	15,000
5 mm	200	kg	10,000
Vinovil sticker	100	kg	1,000
Duralumin screws for metal sheets in thickness of 0.5 - 1.0 mm fort ⌀ 4.5x16	200	kg	1,000
Antiacid glass slab	30	m^2	9,000
Zinked wave sheet 2150x900x950 0.5 - 0.7	25	mt	37,500
Sheet of glass for windows:			
3 mm	1,000	m^2	5,000
5 mm	300	m^2	2,100
Nylon rope	100	kg	500
Brush for antiacid painting	100		100
Brush for painting	400		800
Lime-water painting brush	50		50

Note: ⌀ = diameter.

All Trains–Total Complex. Bearings and Seals

Item Description	Quantity	Total Cost
Ball Bearings (Single Row):		
7208C, 36208, 46208	20	200
6200, 200	10	100
6205, 205	10	100
6206, 206	10	100
6213, 213	10	100
6304, 304	10	100
6305, 305	10	100
6306, 306	10	100
6204, 204	10	100
6309, 309	10	100
6310, 310	10	100
6202, 202	300	300
62202, AL15	50	500
6302, 302	10	100
6001, 101	10	100
6215, 215	10	200
6313, 313	10	200
6319, 319	10	200
6314, 314	10	200
6318, 318	10	200
6405, 405	10	100
60305, 6305 zz	10	100
7310C, 46310, 36310	10	150
6311, 311	10	200
7207C, 46207, 36207	10	100
Ball bearings (double row)		
1611, 2311	10	150
3304, 3056304	10	100
1305, 111305	10	100
3305, 3056305	10	100
Axial trust ball bearings:		
588911	30	600
688911	30	600

(Continued)

All Trains–Total Complex. Bearings and Seals
(Continued)

Item Description	Quantity	Total Cost
Conic roller bearings:		
7203, 30203	5	50
7306, 30306	5	50
7313, 30313	5	100
7518, 32218	5	100
7204, 30204	20	200
7608	30	450
7207, 30207	30	450
Roller bearings:		
NU312, 32312	10	200
N3010K, 3182110	4	40
3511, 22211	4	60
NU310, 32310	10	150
21314, BRS70	6	120
22326, 3626	4	120
Sealing rings:		
⌀ 20x35x7	20	100
⌀ 15x35x7	20	100
⌀ 17x35x7	20	100
⌀ 20x40x7	20	100
⌀ 22x40x7	20	100
⌀ 25x40x7	20	100
⌀ 30x40x7	20	100
⌀ 30x45x7	20	100
⌀ 28x47x7	20	100
⌀ 35x50x7	20	100
⌀ 30x52x10	20	100
⌀ 42x65x10	20	100
⌀ 52x68x10	20	100
⌀ 50x80x10	20	100
⌀ 60x80x10	20	100
⌀ 70x90x10	20	100
⌀ 105x130x12	20	100

Note: ⌀ = diameter.

Trains 2 and 3. Spare Parts Requested by the FN and Estimated Cost

Instruments	Quantity	Total Cost
Differential pressure transmitter with a maximum operating pressure of 420 kg/cm^2. Span adjustable from 700 to 17,000 mm H_2O Deltapi N-AD.	5	5,000
Bellows operated differential pressure transmitter. Maximum operating pressure 400 kg/cm^2. Span adjustable 3.5 to 18 kg/cm^2. Deltapi N-AH.	3	3,000
Platinum resistor thermometer P5	30	600
Platinum resistor thermometer P7	30	600
Platinum resistor thermometer P7D	20	400
Misuratore a rota ovale arov bopp reuther Tipo O.A.P 125R5/G2, DN 65 PN 40 NF 11241. Minimum 100 liters, maximum 700 liters for ammonia. Erogazione al minuto primo.	2	3,000
Deltapi N - AE Pneumatic transmitter. Differential pressure transmiter with separators and capillaries. Maximum operating pressure 64 kg/cm^2. Span adjustable 0 to 2000 mm H_2O. Separators connecting capillaries 2 mt. Diaphragm diameter 3 inches. Capsule filling silicone oil materials. Body AISI 316, diaphragm AISI 316, separators diaphragm AISI 316 L. Separators filling Hytil - A.	8	8,000

All Trains–Total Complex. Spare Parts Requested by the FN and Estimated Cost

Item Description	Quantity	Total Cost
Electrical		
Air switch rotor tip D6E, 2000 A	1	12,100
Insulator	1	300
Main stationary contact	6	360
Main mobil contact	6	360
Stationary contact	6	90
Mobil contact	6	90
Membrane for pneumatic blowers	10	100
Spring for stationary contact	10	100
Tulip-shaped contact	60	600
Motor stator coil SIM 7F-10	1	25,000
Motor stator coil SIM SE-12	1	25,000
Complete plug model TPO3	20	200
Plug model RO-58	30	300
Plug model ML-0.5	30	300
Plug model MT-3	10	100
Plug model ML-5	100	300
Plug model ML-10	40	200
Plug model GD-59	20	100
Paper for recorders SD-190 with 60 divisions 0 to 12, speed 3 div/h length 25 m.	200	1,000
Paper for recorders with 40 divisions 0 to 200, speed 3 m/h, length 25 m.	60	300
Paper for recorders 9M, 190, 47 to 53 speed 3 m/h, length 25 m.	120	240
Paper for recorders SD-190, 0 to 8,000 speed 3 m/h, length 25 m	100	500

(Continued)

All Trains–Total Complex. Spare Parts Requested by the FN and Estimated Cost

Item Description	Quantity	Total Cost
Electrical (Continued)		
Pincers for contact 200A to remove boxes	100	400
Head for 3 phases with copper cable, paper, and lead insulation 185 mm	5	1,500
Head for 3 phases with copper cable, paper, and lead insulation 240 mm	5	1,500
Porcelain insulator to remove switches	30	300
Porcelain insulator support for bases	30	300
Platinum thermoresistors type PB	60	300
Platinum thermoresistors type C, PC	60	300
Carbon contacts:		
Tip E3 32x20x40 mm	250	2,500
Tip E3 40x32x40 mm	150	1,500
Tip M32 32x25x60 mm	500	5,000
Tip E29 30x30x40 mm	100	1,000
Tip M32 8x16x20 mm	100	1,000
Tip E3 50x32x40 mm	100	1,000
Tip M32 12x12x35 mm	30	300
Tip E8 20x16x35 mm	50	500
Tip E8 20x12x35 mm	20	200
Tip E3 50x25x60 mm	36	360
Tip E5 20x18x35 mm	50	500
Transformer with oil cooler 610.32A ⌀ 150 mm	5	350
Mega wattmeter recorder 0 to 12 MW, 1200/5A	1	800
Meter tip UNIMER 33	4	5,600
Mega ohmeter 250 V	4	840
Mega ohmeter 500 V	2	420
Mega ohmeter 1000 V	1	420

(Continued)

All Trains–Total Complex. Spare Parts Requested by the FN and Estimated Cost
(Continued)

Item Description	Quantity	Total Cost
Portable equipment to measure resistences	1	2,300
Industrial voltimeter		
KL 1.5 range 10 to 250 V, 50 Hz	10	1,700
KL 1.5 range 10 to 500 V, 50 Hz	15	2,550
Hermetic luminescent 2x24 240 V	50	10,000
Slide hermetic projector 500 W, 240 V	4	1,068
Bipolar switch	17	272
Active power contactor	2	2,000
Laboratory voltimeter KL 0.5 10 to 150 V	1	400
Stationary battery	34	1,360
Laboratory amperimeter KL 0.5 10 to 10A	1	400
Indicator for low voltage range 10 to 500V	100	1,000

Note: ø = diameter.

Appendix H

Environmental/Pollution Control

Monsanto Enviro-Chem Systems Inc.

TELECOPIER TRANSMITTAL SHEET

MONSANTO ENVIRO-CHEM SYSTEMS, INC.
P.O. BOX 14547
ST. LOUIS, MISSOURI 63178

PC: JF
3/18/93

TO: JIM FOSTER

DATE: 3/18/93

COMPANY: IFDC

PAGES TO FOLLOW: 4

LOCATION:

FROM: PRAFUL H. MALKAN

TELECOPIER PHONE NUMBER: 205-381-7408

PHONE NUMBER: 314-275-5784

SUBJECT:

MONSANTO ENVIRO-CHEM FAX NUMBER: (314)275-5701. ANY PROBLEMS WITH TRANSMISSION CALL: GINA STINSON: (314)275-5700

MESSAGE:

Monsanto Enviro-Chem

Monsanto Enviro-Chem Systems, Inc.
Corporate Pointe
P.O. Box 14547
St. Louis, Missouri 63178-4547
Phone: (314) 275-5700

March 18, 1993

J. W. Foster Associates
2410 East 45th Street
Tulsa, OK 74105
Attention: Jim Foster

Dear Mr. Foster:

Thank you very much for your interest in our Brink Mist Eliminators and other products. Attached are the very rough and preliminary cost figures you requested for Albania Fertilizer Plant's three trains.

We have estimated the flow rates for all the gas streams on the basis of the production data you provided and our experience.

Please note that we have recommended high efficiency mist eliminator elements for low density ammonium prill tower (train # 1). Usually the exhaust from the low density ammonium prill tower does not require high efficiency mist eliminators. In USA, most of the manufacturers use scrubber and mesh pads to control the emissions from the low density ammonium nitrate prill tower.

When you get more information and process conditions from Albania Fertilizer Plant, call us to revise the cost estimates.

If you have any questions call our Mr. E. D. Kennedy or myself.

Thank you again.

Sincerely,

Praful H. Malkan

Praful H. Malkan

215

ALBANIA FERTILIZER PLANT

Train # 1, Ammonium Nitrate Neutralizer

Production: 375 st/d (340 mt/d)
Flow Rate: 15,875 acfm

Brink Mist Eliminator Elements & Other Equipment:

9 Elements, HV, 18553, Teflon Fiber, SS 304
Polygon Frame SS 304
Vessel SS 304
Sprays 18 SS 304

Total Equipment Cost $ 100,000

Pressure drop 10 Inches of water

Train # 1, Ammonium Nitrate Evaporator

Production: 375 st/d (340 mt/d)
Flow Rate: 6875 acfm

Brink Mist Eliminator Elements & Other Equipment:

4 Elements, HV, 18553, Teflon Fiber, SS 304
Polygon Frame SS 304
Vessel SS 304
Sprays 4 SS 304

Total Cost $ 40,000

Pressure Drop 10 Inches of Water

Train # 1, Ammonium Nitrate Prill Tower

Production: 375 st/d (340 mt/d)
Flow Rate: 68,918 acfm

Brink Mist Eliminator Elements & Other Equipment:

44 Elements, HE, 24144/Polyester 132, SS 304
Mesh Pads SS 304
Vessel SS 304
Sprays 106 SS 304
Blower
Circulation Pump not included

Total Cost $ 800,000

Pressure Drop 12 Inches of Water
Efficiency 98 %

ALBANIA FERTILIZER PLANT

Train # 2, Urea Evaporators

Production: 298 st/d (270 mt/d)
Flow Rate: 12,337 acfm

Brink Mist Eliminator Elements & Other Equipment:

7 Elements, HV, 18553, Teflon Fiber, SS 304
Polygon Frame SS 304
Vessel SS 304
Sprays 14 SS 304

Total Cost $ 75,000

Pressure Drop 12 Inches of Water

Train # 2, Urea Prill Tower

Production: 298 st/d (270 mt/d)
Flow Rate: 121,367 acfm

Brink Mist Eliminator Elements & Other Equipment:

18 Elements, CS11P, 2640, Polyester Fiber, SS 304
Vessel SS 304
Sprays 27 SS 304
Blower
Circulation Pump not included

Total Cost $ 680,000

Pressure Drop 14 Inches of Water

ALBANIA FERTILIZER PLANT

Train # 3, Urea Evaporators

Production: 353 st/d (320 mt/d)
Flow Rate: 14,614 acfm

Brink Mist Eliminator Elements & Other Equipment:

8 Elements, HV, 18553, Teflon Fiber, SS 304
Polygon Frame SS 304
Vessel SS 304
Sprays 16 SS 304

Total Cost $ 90,000

Pressure Drop 12 Inches Water

Train # 3, Urea Prill Tower

Production: 353 st/d (320 mt/d)
Flow Rate: 143,767 acfm

Brink Mist Eliminator Elements & Other Equipment:
22 Elements, CS11P, 2640, Polyester Fiber, SS 304
Vessel SS 304
Sprays 33 SS 304
Blower
Circulation Pump not included

Total Cost $ 800,000

Pressure Drop 14 Inches of Water

21 nations join to fight ecological crisis

Environmental ministers and other top environmental officials from 21 nations in East Europe and the former Soviet Union last week agreed to join forces to attack the region's environmental problems. At a press briefing in Washington, D.C., they announced initial steps to address "the overwhelming ecological crisis of our region, a crisis created by the cruel indifference toward environmental responsibility of the previous totalitarian governments."

The agreement emerged from a three-day conference held in Florida, the region's first ministerial-level meeting on the environment. A preparatory session was held last October in Bulgaria.

The ministers also spent two days in Washington, D.C.—meeting Vice President Gore, Environmental Protection Agency Administrator Carol M. Browner, other officials, and members of Congress, World Bank executives, and leaders of environmental groups. The visit was organized by the Center for Democracy, a small Washington, D.C.-based nonprofit group, and funded by the Howard Gilman Foundation.

The agreement calls for setting up effective information exchange and an early warning system; working to harmonize environmental legislation, standards, norms, and monitoring systems; and developing cleanup technologies, new economic mechanisms to encourage environmental protection, and other measures. Further regional ministerial meetings are planned.

Alexei Yablokov, Russian state counselor on ecology and public health, says the agreement "maybe seems too simple, but it's a real first step, not lip service." Support for its provisions will be sought at a pan-European ministerial conference on the environment next month in Lucerne, Switzerland. Funding also will be sought internationally.

At the briefing, ministers called for urgent attention to several problems cutting across national borders: nuclear fallout from Chernobyl and Semipalatinsk; drying up of the Aral Sea and Lake Sevan; and pollution of the Black Sea (especially the Danube and Dnieper River basins), Baltic Sea, and Caspian Sea.

The explosion of the Chernobyl nuclear power station in Ukraine, spreading radioactive fallout over a vast area, has drawn the most attention. But Victor I. Danilov-Daniljan, Russian Minister of Ecology & Natural Resources, stresses that "for me, the most dangerous problem is chemical pollution of air, water, and soil"—from metallurgical, energy, and agricultural activity, and from chemical plants and oil refineries. "Eighty cities in our country have days with more than 10 times the allowed air pollution levels," he notes, "and probably not one major city adheres to water quality standards." In one area, the death rate among children is up eight times, "proved basically due to chemical pollution."

Ivan I. Dedju, director of the State Department of Environment & Natural Resources in Moldova, points to another chemical problem: people in the West trying to get rid of toxic and military wastes by shipping them eastward, for example from Germany to Romania. "I think those who undertake such things ... are immoral," he emphasizes.

Askhad S. Khabibulaev, Minister of Environmental Protection in Uzbekistan, notes that because of lower water volume in Central Asia's rivers, the Aral Sea already has lost two thirds of its area and 70% of its water volume. Svyatoslav A. Medvedev, Minister of Ecology & Bioresources in Kazakhstan, which also borders the Aral, adds that the sea will dry up within 10 years if corrective steps are not taken. Huge amounts of "sulfur-filled salts" from the dry seabed go into the atmosphere each year, he points out, reaching as far as China and Poland.

Another Kazakhstan problem is Semipalatinsk, once the testing site for 470 nuclear explosions. People live just 30 to 40 miles away. (In Nevada they live no closer than 100 miles from the U.S. test site, Medvedev notes.) And Kazakhstan's capital, Alma Ata, is about 500 miles from China's nuclear test site. "We have data showing the death rate of young children in East Kazakhstan goes up significantly" as a result of China's tests, he says.

Karine S. Danielyan, Minister of Nature & Environmental Protection in Armenia, explains that the conflict with Azerbaijan has resulted in blockade of energy supplies, causing a severe energy crisis in Armenia. This has forced her nation to "destroy our beautiful Lake Sevan" during the past two years to produce hydroelectric power. Her government also is considering reactivating a nuclear power station that was closed because it sits in an earthquake-prone zone.

Such conflicts in the region make all the more significant the environmental cooperation agreed on, stresses Center for Democracy president Allen Weinstein. "This can potentially be a solvent, a way of bringing together people. I don't know if they're working together from some of these countries on any other issue."

Richard Seltzer

Environmental problems cross many borders

Appendix I

Chevron

Appendix I-1

send to (FAX)
355-52-23559

March 15, 1993

Mr. Len W. Bzdel
Chevron Overseas (Albania) Limited
Durres, Albania

Dear Len:

With reference to your FAX, dated March 8, 1993, yes we are serious and want to proceed with recommending to USAID a joint effort of Albpetrol and Chevron to do a study in Albania to include those items in your FAX which I am outlining below and also include a final study of their findings

1. Devina Reserve Assessment.
2. Review of Halliburton Study and Recommendations.
3. Field Simulation Work If Sufficient Data is Available.
4. Independent Assessment of Pipeline Condition
5. Capability of Albanian Enterprises to Replace Sections of The Pipeline.
6. If Time Permits, Review Other Albanian Gas Field Data As Potential Supply Source For the Fertilizer Plant.
7 Prepare Final Report.

We would appreciate your providing Chevron's budget estimate for doing this study and please be advised that this is for the purpose of a recommendation in the report to USAID and there is not commitment to do this study until USAID approves such study.

I have held discussions with Mr. Roy Brown, V-Pres. Halliburton International, in Duncan, Oklahoma and he is contacting their London office to get information on the Delvina well and costs that are available.

Thanks for your and Chevron's assistance in the matter and we will be looking forward to your FAX reply.

Sincerely,

JWFoster/JPolo

cc JS, JRP, JRL

Acc # 3-20-31-213

Appendix I-2

PC: JRP JJS FAN AHR 3/8/93

Chevron Overseas (Albania) Limited **Facsimile**

Date: March 8, 1993 COAL Log No.: 370

To: Fax No.: 001-205-381-7408
Name: Mr. Jorge R. Polo
Company: International Fertilizer Development Center
City/Country: Muscle Shoals, Alabama, U.S.A.

Copy To: Fax No.: 0044-71-487-8905
Name: Enzo Zappaterra/Bob Scamman
Company: Chevron Europe and Middle East
City/Country: London, England
Phone # 44-71-487-8878

From: Len W. Bzdel
Chevron Overseas (Albania) Limited
Durres, Albania

Number of Pages (Including Cover): 02

Message: Technical Services Contract Proposal for Albanian Gas/Condensate Field Study

As per our conversation of March 4 and 5 I wish to confirm that Chevron would be interested and willing to supply technical personnel to IFDC under a technical services contract.

In general the studies to be conducted would include:

1) Delvina reserves assessment
2) review of Halliburton study and recommendations
3) field simulation work if sufficient data available
4) independent assessment of pipeline condition
5) capability of Albanian enterprises to replace sections of the pipeline
6) if time permits to review other Albanian gas fields as potential supply sources for the fertilizer plant

The specific areas of study could be formulated by the team members by direct discussion with the IFDC personnel and consultants.

Chevron experts that most if not all of the technical personnel can be sourced out of our London office.

If you do not receive all pages please call: (Int) 355 52 23964
or INMARSAT (Int) 871 144 5367
Facsimile Receiving Numbers (Int) 355 52 23559
or INMARSAT (Int) 871 144 5366

Chevron Overseas (Albania) Limited **Facsimile**

I would ask that if IFDC is still serious about the offer to Chevron then please respond to this office and I will provide you with contact names for more direct discussions and a more detailed cost estimate. Thank you for your consideration of Chevron.

Yours sincerely,

Len W. Bzdel

Len W. Bzdel
Managing Director

If you do not receive all pages please call: *(Int) 355 52 23964*
or *INMARSAT* *(Int) 871 144 5367*
Facsimile Receiving Numbers *(Int) 355 52 23559*
or *INMARSAT* *(Int) 871 144 5366*

Outreach

FACSIMILE TRANSMITTAL SHEET

pc: JRP JJS TAN 3/24/93

TO: 901012053817408

MAR 3 1 1993

FROM: Exploration

DELIVERY TIME: 24-MAR-1993 14:11:41

DELIVERY NODE: 3, Chevron FaxXchange

SESSION: 3 - 9289

PAGES: 3 (including this page)

254

Chevron

2 Portman Street, London W1H 0AN
Tel: 071-487 8100 Fax: 071-487 8923 Tlx: 266471

FACSIMILE TRANSMITTAL

DATE: 24 March 1993

TO: International Fertilizer Development Centre
Fax no: 0101 205 381 7408
Attn: Mr. Jorge R. Polo

TO: J. Foster Associates
Fax no: 0101 918 747 0937
Attn: Mr. J. Foster

SUBJECT: ALBANIA DELVINA FIELD PROJECT

Further to our telephone conversation of 18 March, enclosed is Chevron's estimated budget required for the evaluation of the Delvina field onshore southern Albania. The cost estimate attached to this letter is based on using technical personnel out of our London office for about two weeks. Included in the cost estimate are the services of a reservoir engineer, facilities engineer, development geologist, co-ordinator, and incidental expenses associated with the project.

In general, the studies to be conducted would include:

1) Delvina reserves assessment.
2) Review of Halliburton study and recommendation.
3) Field simulation work, if sufficient data are available.
4) Independent assessment of pipeline conditions.
5) Capability of Albanian enterprises to replace sections of the pipeline.

The specific areas of study will be formulated in co-ordination with IFDC personnel and consultants upon approval of the project by USAID.

The total estimated cost is $70,000. Please note that only actual charges incurred and days worked will be charged to the project. If you require additional information please call me at 44-71-487-8878 during office hours.

Chevron thanks you for your consideration of our company, and looks forward to the opportunity of working with IFDC on this project.

Regards,

E. ZAPPATERRA
Exploration Manager
Mediterranean

cc: R.W. Smith
L. Bzdel (by fax: 010 355 52 23559)

EZ(085/93.dw)
File: Alb.007

ALBANIA - DELVINA FIELD EVALUATION

COST ESTIMATE	$
Technical Personnel Services	49,000
Transpotation: London to Durres for three	5,000
Local transportation (12 days @ $100/day)	1,200
Accommodation, including meals (up to 12 days @ $100/day/person)	3,600
Translation of documents	4,000
Chevron Albania logistical support and on-site translator	3,000
Contingencies	4,200
Total Estimated Cost	**$70,000**

E2(085/93.dw)
File: Alb.007