NIS FEASIBILITY STUDY

MANUFACTURING FACILITY

FOR

DIPHTHERIA, TETANUS, and PERTUSSIS VACCINE

AND

ORAL POLIO VACCINE

Prepared for:

U. S. Agency for International Development

by:

Lederle-Praxis Biologicals
Division of American Cyanamid Company
Wayne, New Jersey

October 1993

with consultation from:

Flad & Associates
Affiliated Engineers Inc.
Madison, Wisconsin

John Brown Engineers and Constructors
Berkeley Heights, New Jersey

Environmental Resource Management, Inc.
Exton, Pennsylvania

NIS FEASIBILITY STUDY

Table of Contents

	Page
FORWARD	
Background	i
Current Epidemiology	i
U.S. Agency for International Development Evaluation	ii
NIS FEASIBILITY STUDY	
I. Executive Summary	
A. Objectives	1.1
B. Scope of Work	1.1
C. Summary of Findings	1.2
II. Market Analysis	
A. Demographic Profile	2.1
B. Vaccination Coverage	2.1
C. Availability of Vaccines	2.3
D. **DTP**	
1. Background	2.4
2. Current Market Situation	2.5
3. Vaccine Needs	2.6
4. Russian Manufacturers	2.6
5. Cold Chain Distribution System	2.7
6. Distribution and Waste Factors	2.7
E. **OPV**	
1. Background	2.8
2. Current Market Situation	3
3. Vaccine Needs	2.9
4. Russian Manufacturers	2.9
5. Cold Chain Distribution System	2.10
6. Distribution and Waste Factors	2.11

NIS FEASIBILITY STUDY

Table of Contents (cont.)

			Page
III.	**Regulatory Overview**		
	A.	National Control Authorities and Regulating Bodies	
		1. Ministry of Health	3.1
		2. State Committee on Sanitary and Epidemiological Surveillance	3.1
		3. Tarasevich Institute	3.2
	B.	New Product Development	3.4
	C.	New Product Approvals	3.4
	D.	Productions and Inspections	3.5
IV.	**Vaccine Manufacturing Facility**		
	Executive Summary		4.1
	A.	Introduction: Assumptions	4.3
	B.	Manufacturing Process Description and Flow Diagrams	4.4
	C.	Staffing and Space Requirements	
		1. Methodology	4.17
		2. Assumptions	4.17
		3. Acronyms	4.19
		4. Program summary:	4.20
		- Staff Requirement Summary Table	4.21
		- Organization Charts	4.22
		- Space Requirement Summary Table	4.25
		5. Detailed Space Requirements	4.26
		6. Program Key	4.54
	D.	Equipment and Component Requirements	
		1. Introduction	4.55
		2. Equipment Summary	4.56
		3. Equipment Lists	4.57
		4. Packaging Components	4.69
		5. Freezers/Chillrooms/Incubators	4.71
	E.	Building Specifications - Technical Data Sheets	4.72

NIS FEASIBILITY STUDY

Table of Contents (cont.)

			Page
IV.	**Vaccine Manufacturing Facility (cont.)**		
	F.	Systems Basis of Design	4.98
		1. Process Piping Systems	4.101
		2. Process Utility Systems	4.102
		3. Primary Site Utilities	4.108
		4. Primary Building Systems	4.111
		5. Process Equipment Utility Consumption	4.151
		6. Building Utility Load and Consumption	4.153
V.	**Existing Site Analysis**		
	A.	Site Selection	5.1
	B.	Site Assessment	
		1. Site Location	5.4
		2. Site Conditions	5.6
		3. Climate	5.10
		4. Infrastructure	5.12
		5. Transportation	5.16
		6. Permits and Zoning	5.17
		7. Site Survey Checklist	5.19
	C.	Environmental Assessment	5.37
VI.	**Proposed Site and Facility Plan**		
	A.	Facility Concepts and Design Assessment	
		1. Introduction	6.1
		2. Building Configuration Concepts	6.1
	B.	Impacts of Russian Methods on Facility Design	
		1. Construction Assessment	6.6
		2. Design Assessment - Russian Regulations	6.9
		3. Proposed Site and Facility Design	6.15
		4. Summary: Building and Utility Area Analysis	6.27
		5. Key Questions Answered by John Brown/SAPHEC	6.29

NIS FEASIBILITY STUDY

Table of Contents (cont.)

			Page
VI.	**Proposed Site and Facility Plan (cont.)**		
	C.	Construction Cost Estimate	
		1. Overview	6.32
		2. US Cost Estimates	6.32
		- Assumptions	6.32
		- Cost Estimate Summary	6.34
		- Detailed Cost Estimates	6.35
		- US Construction Schedule	6.41
		3. Russian Cost Conversion	
		- Basis for Cost Conversion	6.43
		- Conversion of Cost Estimate Summary	6.49
		- Russian Construction Schedule	6.50
		- Cash Flow Analysis	6.52
		4. Summary	6.53
	D.	Facilities and Engineering Risk Assessment	6.55
	E.	Findings and Recommendations	6.59
VII.	**Economic/Financial Analysis**		
	A.	Overview	7.1
	B.	CIS Vaccine Markets for DTP and OPV	7.1
	C.	Definitions	7.9
	D.	Assumptions	7.10
	E.	Financial Summaries	7.14
VIII.	**Summary and Conclusions**		
	A.	Overall Assessment	8.1
	B.	Recommendations	8.5
	C.	Conclusions	8.7
IX.	**References and Contacts**		9.1

NIS FEASIBILITY STUDY

Manufacturing Facility

for

DTP and Polio Vaccines

FORWARD

Background

The restructuring of the former Soviet Union's economy has created severe shortages in raw materials necessary to continue production of oral polio, diphtheria-tetanus-pertussis (DTP), and measles vaccines. The institutes responsible for the manufacturing of these vaccines have not invested sufficient resources in the maintenance and upgrading of their facilities to maintain adequate quality standards and have not had access to hard currency necessary to import finished vaccines or vaccine components. For this reason, manufacturers are having difficulty producing enough product to satisfy demand and some have discontinued operations altogether.

The former USSR was self-sufficient in production and control of vaccines used in its childhood immunization programs. Oral polio, DTP, DT, measles, mumps, and BCG vaccines were all produced and distributed in quantities necessary or exceeding those required for the recommended vaccination schedule. However, by the beginning of the 1990's the only production facilities/institutes operating in the USSR were located in the Russian Federation and in some cases, only a single producer for each of the vaccines existed.

Current Epidemiology

The recent outbreaks of diphtheria in Russia and the Ukraine have put the spotlight on a childhood disease that has been successfully controlled in the U. S. and Western Europe for the last 30 years. In some European countries not a single case of diphtheria has been reported over the last 15 years. In the former USSR the disease was virtually eliminated in the 1970's, but now has staged a powerful comeback.

In the early 1980's, diphtheria incidence began to increase, exceeding 1,000 cases annually in 1983-1985.[a] In 1990, the World Health Organization (WHO) reported the overall number of cases of diphtheria in Russia reached over 1,000, and in 1991 it came close to 2000. Last year, a dramatic surge in cases of diphtheria resulted in a near doubling of the 1991 level to 3,899 cases. The number of deaths due to diphtheria ranged from 9 to 41 in 1980-1989 but increased considerably in the last three years reaching 125 deaths in 1991 compared to the US reported cases of three in the same period. WHO reported only one case in France, two cases in Germany, and one case in Italy.[b]

The epidemic has spread to most of the oblasts (regions) of the country. The highest rates of incidence, 8.7 to 17 cases per 100,000 population, were reported in St. Petersburg, Kaliningrand and Orlov oblasts, and in Moscow.[a] In 1992, 25% of the diphtheria cases in Moscow were in children under 14 years of age (6%, 12%, and 8% in age groups below 5 years of age, 5-9 years of age, and 10-14 years of age, respectively). This incidence rate was the highest recorded in pre-school and schoolchildren in 1992. In Moscow, the incidence rate among vaccinated children in 1991 was 5.3 per 100,000 population while among unvaccinated children the rate was 33 per 100,000 population. The majority of cases were reported in adults aged 20-50 years old.

The number of diphtheria cases is also increasing in the Ukraine which in 1992 reported 1,553 cases.[a] These dramatic increases of disease in these countries have created tremendous concern in the medical community as global trade expands to include these previously inaccessible regions of the world. There is a danger of the epidemic speading to other European countries. In 1992, cases reported in Belarus, Latvia, Lithuania, and Norway were epidemiological linked with epidemics in Russia or the Ukraine. In 1993, Poland reported two cases of diphtheria which had been linked to the Ukraine.

Paralytic polio is also staging a comeback in the former USSR. In 1992, seventeen cases of poliomyelitis were recorded in Azerbaijan, nine cases in Russia, and twelve cases in the Ukraine.[c] Accurate recordings are not available but it is estimated that a total of 300 cases of have occurred throughout the entire region last year. There have been significant increases in the Central Asian region due both to system-wide problems with distribution, the import of the virus from Pakistan and India, and general resistance to vaccination. Furthermore, wild polio virus has been found in the water supply and sewage system of Moscow, indicating that any break in vaccination could result in widespread infection.[d]

US AID Evaluation

The deterioration of vaccine production capacities is one of the most pressing health problems facing the NIS republics. The concern for global health prompted the U.S. Agency for International Development (AID) to coordinate a task force to assess the reasons for the outbreaks in disease. In March of 1992, industry experts from US vaccine manufacturers and the US Government visited Russia and the Ukraine to investigate the recent outbreaks of polio, diphtheria, and measles and to assess vaccine supply and manufacturing in the NIS. Representatives of Lederle-Praxis Biologicals, a division of American Cyanamid Company

(LPB), Merck, Sharp & Dohme (MSD), AID, and the Food and Drug Administration (FDA) visited the NIS to:

a) Assess the condition of local production facilities and the causes for recent production declines;

b) Determine what emergency assistance could be provided to restore vaccine production of an acceptable quality;

c) Determine which barriers to production are of a long term nature, how those barriers might be addressed with investment, and how that investment might be generated.

Dr. Susan Raymond of AID summarized the findings of the initial mission and hypothesized that the increases in diphtheria and polio diseases were due to:

- the deterioration of the infrastructure of the NIS,
- substandard production facilities,
- declining quality of the products, and
- general resistance to vaccination by the public for the reasons above.

Vaccine manufacturers have significantly reduced or stopped production. Measles vaccine, for example, has not been produced since August 1991 and an estimated three million children from one to three years of age are at risk.[e] The lack of vaccine availability has prevented sufficient immunization of the population, thereby increasing the susceptibility to disease. When vaccines are available, the quality and effectiveness of the product are questionable. For example, to fully immunize a child, the current polio vaccine in Russia requires seven doses due to the differences in potency formulation compared to the US formulation which uses only five doses per immunization series. Although an increase in potency of the Russian formulation would most likely improve the vaccine's effectiveness, the manufacturers do not appear to have the capacity to produce such a product.

With the recent restructuring of the government and its economy, severe shortages in raw materials and lack of access to hard currencies have made investments in upgrading current production facilities nearly impossible. These improvements in facilities are essential to the success of providing high quality, low cost vaccines to the populations of the NIS. High inflation and technical obstacles have also reduced the availability of vaccines from Russia to other NIS republics as well. These problems have continued to increase in 1993.

As a result of the USAID evaluation, a $40 million, four year NIS Health Care Improvement Project was authorized April 17, 1992. It has three components: 1) transfer U.S. medical knowledge and technology, 2) re-establish production of vaccines, pharmaceuticals, and urgently needed medical supplies, and 3) support expanded U. S. trade and investment to reform NIS health care systems.

In March of 1993, AID supported an immediate supply of US manufactured vaccine to the NIS to provide emergency assistance. LPB participated in this effort by supplying 650,000 doses of DTP and 420,000 doses of DTaP (acellular pertussis) vaccine to AID for distribution in the Ukraine.

In addition, Lederle-Praxis Biologicals received a grant of $818,880 from AID to support vaccine production programs. The short and medium term needs are to provide essential supplies and equipment to sustain the current manufacture of vaccines in existing institutes and provide training programs for Russian scientists. The raw materials, supplies, and equipment were shipped to the Russian Institutes late July 1993.

The long-term needs include a complete rebuilding of the vaccine production infrastructure to ensure product quality. A pre-investment feasibility study has been performed to assess the risks and benefits of rebuilding the NIS vaccine industry. Lederle-Praxis Biologicals was requested to perform the feasibility study that investigates the development of new production facilities within the NIS and hopefully will provide a mechanism for manufacturers to begin discussions with governments and local officials for the privatization of the vaccine production industry in this region.

Section I

EXECUTIVE SUMMARY

I. Executive Summary

Under the U.S. Agency for International Development Grant Number CCS-0004-G-00-2062-00 Amendment #2, Lederle-Praxis Biologicals, a division of American Cyanamid Company has completed the pre-investment feasibility study as described in Phase III of the Program Description for the Schedule of the Grant.

A. Objectives

The objective of this feasibility study is to address the development and construction of a new vaccine manufacturing facility in the Newly Independent States that could meet U. S. quality standards. The intent of this study is to assist interested parties in assessing the opportunities and risks associated with rebuilding the vaccine industry in the NIS and to encourage private sector investment through commercialization such as joint venture participation by American firms. In addition, we hope that the process of developing and carrying out this feasibility study would encourage the U. S. Government's serious exploration of the issues involved, thereby facilitating the policy changes that would be necessary to allow the necessary shift in ownership.

B. Scope of Work

The feasibility study is a stand alone document which provides a detailed assessment of the capital investment required for the construction of a new vaccine manufacturing facility. The study analyzes a bulk batching, filling, and packaging facility for DTP and polio vaccines using current U.S. Good Manufacturing Practices (cGMPs) and FDA regulations as guidelines for both facility design and product quality.

The study considers the relevant regulations and includes a site assessment, preliminary environmental impact analysis, facility concept diagrams, engineering details, staffing requirements, and marketing and financial analysis with risk assessment. Conditions unique to the Russian market such as construction alternatives, labor availability, materials sourcing, and the impacts of local regulations are also highlighted.

Only one site is selected for this evaluation.

This feasibility study evaluates the many aspects of initiating a production facility for OPV and DTP in the NIS. The final analysis addresses the opportunities and risks associated with the NIS

13'

vaccine market and should yield a preliminary indication of the profit potential and base plan for the construction and operations of a manufacturing facility in this region. In addition, this study may be used by commercial banks, US multinational corporations, and the World Bank to evaluate the potential for privatization of the vaccine industry within the Newly Independent States.

C. Summary of Findings

The following is a summary of the NIS Feasibility Study for the construction of a new DTP and OPV vaccine manufacturing facility in the NIS.

- The capital investment for the construction of a new DTP and OPV vaccine manufacturing facility at the Institute of Immunology, Lyubuchany, Russia is projected to be $103M U.S. The facility will be approximately 195,000 square feet (18,000 square meters), employ 200 people, and take approximately four to five years of engineering, construction, validation, and startup to complete.

- The GMP facility in Russia will cost approximately the same as it would to build in the US despite lower local labor and materials costs. The main reasons for the off-setting higher costs are 1) additional labor required to ensure the quality necesary to meet US GMP (Good Manufacturing Practice) and Russian design standards for vaccine production and 2) additional costs of importing supervisory or specialty labor and materials. Also, the facility will likely take longer to construct than anticipated domestically.

- From a business perspective, the economic viability of building a vaccine manufacturing facility in the CIS requires further evaluation. Current conditions do not support an investment of this magnitude for the following reasons:

  a. Low projected sales volumes and selling price do not support the construction of a vaccine manufacturing facility because the economies of scale are not achieved.

  b. The unlikelihood that the local selling price would increase faster or higher than World vaccine prices for DTP and OPV.

  c. The ability to secure substantial market position in the new environment is unclear.

- Developing the business strategy for this type of investment in the vaccine industry will depend on the investor's overall strategic plan taking into account the changing political and economic environment.

- The rights and liabilities of property and facility ownership in Russia is not likely to be clearly defined in the near future and hence, will obscure both cost and business implications. Among the concerns are: 1) privatization and land and property rights in Russia, 2) costs and responsibilities which may be incurred by the business venture in exchange for rights to construct a facility, and 3) liability for potential environmental issues associated with past, current, and future work on the site.

It will be essential to respond effectively to the key issues of a) privatization, b) quality standards, c) the need to secure substantial market position in the new environment, d) the need to update product portfolios, and e) the shortfall of necessary information for making rational business decisions facing this region's health industry. Companies who can rise to the challenges of the issues will be the ones to succeed in the NIS.

Section II

MARKET ANALYSIS

II. Market Analysis

A. Demographic Profile

The Commonwealth of Independent States comprises 300 million people with a birth cohort of 4.9 million births per year. Of this total, Russia has a population of approximately 150M and 2.0M births per year. The Demographic Profile of the Commonwealth of Independent States for 1989 is presented in Table I.[f]

Table I
Demographic Profile of
The Commonwealth of Independent States 1989

	Total Population (millions)	Population per sq km	% Urban	Births per year (millions)	% Population of Age <5 yrs	5-15 yrs	> 60 yrs
Russia	147.0	9	74	2.1	7	15	19
Ukraine	50.5	84	67	0.8	8	8	18
Belarussia	10.2	49	65	0.1	7	15	16
Moldova	4.3	128	48	0.1	9	15	12
Georgia	5.4	77	55	0.1	9	17	15
Azerbaijan	7.0	81	54	0.2	13	20	9
Armenia	3.3	11	68	0.1	12	18	9
Kazakhstan	16.5	6	59	0.4	12	21	9
Uzbeckistan	19.8	44	42	0.6	16	25	7
Kyrghzstan	4.3	22	40	0.1	14	13	7
Tajikistan	5.1	36	33	0.2	18	26	12
Turkmenistan	3.5	7	48	0.1	17	26	6
TOTAL	**276.9**			**4.9**			

B. Vaccination Coverage

The vaccination rate in infants for the republics of the CIS is provided in Table II and Table III. Although vaccine coverage is high in some republics, DTP and diphtheria-tetanus (DT) coverage in infants especially in Moscow, St. Petersburg and many other regions of the Russian Federation remain low. The vaccination coverage of children at 16 years of age reached 80% in the whole country, but only 66% in Moscow. No widespread immunization with diphtheria toxoid was organized for adolescents and adults belonging to high risk groups and only now is the Government launching large scale immunizations to increase coverage among children and high risk groups.

Table II

1989 Vaccination Rate In Infants[g]

	% Vaccinated by 12 months of age			
	Diphtheria	Pertussis	Polio	Measles*
Russia	82.7	60.3	68.6	82.6
Ukraine	79.2	74.5	80.5	88.4
Belarussia	90.0	86.6	90.4	97.0
Moldova	87.8	84.3	91.6	94.7
Georgia	n/a	n/a	n/a	n/a
Azerbaijan	89.4	89.4	93.0	91.2
Armenia	88.0	86.2	95.5	92.1
Kazakhstan	84.8	81.4	85.6	93.7
Uzbeckistan	57.5	54.4	61.2	80.9
Kyrghzstan	61.6	60.2	72.0	90.5
Tajikistan	87.9	86.2	89.8	89.0
Turkmenistan	78.4	76.3	83.7	67.7

* vaccinated by 24 months of age

Table III
Percentage of Coverage of Diphtheria Toxoid in Children below one year of age, Russian Federation, 1986-1992[a]

Year	Percent Coverage
1986	72
1987	81
1988	71
1989	83
1990	68
1991	70
1993	73

The incidence of immunizable diseases is many times higher for the CIS than for the United States. However as shown in Table IV, vaccination rates, although lower than the U.S., are not significantly out of line with Western levels.[f] Thus, vaccine programs appear to have succeeded in vaccinating the population but not immunizing them. A number of possibilities can explain this situation. These include problems with 1) the quality of the vaccines, 2) a failure to complete the full immunization series, 3) breakdowns in the cold chain system such as refrigeration, storage, and dating, or 4) inaccurate statistics. Since no comprehensive data is available, it is difficult to determine what proportion of the population in the CIS is truly immunized versus those who are vaccinated.

Table IV: Vaccination Rates for the U.S. and CIS 1990-1991[f]

Disease	U.S	CIS
Diphtheria	87.0	79.0
Pertussis	87.0	60.0
Tetanus	87.0	n/a
Polio	75.7	74.6
Measles	76.9	n/a
Rubella	73.8	0.0
Mumps	75.5	n/a

C. Availability of Vaccines and Vaccine Quality

Vaccine availability has dramatically decreased since the break up of the Soviet Union. During 1991, some of the manufacturing institutes reduced production levels due to difficulties in purchase of materials and technical problems in the production process such as poor vaccine quality. A drastic shortage of measles vaccine was noted, BCG was often in short supply, production of new stocks of oral polio vaccine (OPV) was suspended, and the ability to maintain DTP production beyond the summer of 1992 was questionable. It was estimated that to meet pediatric demands only, the vaccine needs based on WHO's Expanded Program on Immunization (EPI) schedule in the CIS would be as much as:[h]

- ten to thirty million doses of OPV,
- seven to fifteen million doses of DTP,
- up to six million doses of BCG,
- up to six million doses of measles.

Of the 49 vaccines produced in the CIS, only 27 are estimated to meet the standards of the World Health Organization and in general, Good Manufacturing Practices (GMPs) are not available in vaccine production by CIS manufacturers. GMP standards are used to determine production quality and to qualify pharmaceutical and biological products for international trade. For example, in testing of measles and mumps vaccine samples, both WHO and Center for Disease Control (CDC) concluded that the samples were of questionable vaccine potency and were below WHO standards.[f]

Discontinuation of vaccine production is also common and some manufacturers have not reopened for years. Since vaccines for polio and measles are each manufactured by a single institute, this can become a serious problem. The Bacterial Product Enterprises plant in Moscow responsible for measles production has not reopened since manufacturing halted in 1988 and the Tashkent BCG vaccine plant also ceased production in 1990 due to contamination and has not reopened.[f] Vaccine production at the Polio Institute has been impeded due to lack of hard currency to import materials and supplies and to maintain and upgrade existing facilities. It is possible that the incidence of immunizable diseases and disease patterns are linked to these quality issues.

D. DTP Vaccine

1. Background

Diphtheria and Tetanus Toxoids and Pertussis Vaccine Adsorbed (DTP) is a sterile combination of Diphtheria Toxoid, Tetanus Toxoid, and Pertussis Vaccine for intramuscular use. Immunization against diphtheria, tetanus, and pertussis in infancy and childhood has played a major role in reducing the incidence of cases and deaths from each of the following diseases.

- Diphtheria: An acute infectious disease caused by diphtheria toxin from strains of *Corynebacterium diphtheriae*. The onset is gradual; with fever and sore throat. Transmission is through direct contact with a human carrier or as a result of exposure through contact with articles that have been contaminated by a diphtheria patient.

- Tetanus: An acute infectious disease caused by the toxin of tetanus bacillus, *Clostridium tetani* that grows anaerobically at the site of injury. Tetanus usually begins gradually but escalates to lockjaw and intense muscle spasms.

- Pertussis: A disease of the respiratory tract caused by *Bordetella pertussis* also known as whooping cough. Pertussis is a highly communicable disease reported mostly in infants and young children. Early symptoms are similar to the common cold with fever, sneezing, and dry cough which then escalates to more violent coughs.

2. Current Market Situation

Social and economic upheavals in the former Soviet Union have allowed diphtheria to gain a foothold in a region where the disease was once highly controlled and cases relatively unknown. In Russia, 3,899 cases were reported last year and many neighboring countries are facing increased rates of disease. In the Ukraine, 1,553 cases of diphtheria were reported.

New migration patterns and overcrowded and deteriorating living conditions may be a major contributor leading to the resurgence of disease. Most of the cases are concentrated in large urban areas of Moscow and St. Petersburg but the epidemic has struck other regions of the country. In the Siberian town of Abakan, seven soldiers were diagnosed with diphtheria and another 43 were identified as carriers.

Another factor causing the increased incidence of disease is the lack of adequate health supplies. Reports of poor quality vaccine and dirty needles upset the public's faith in the value of vaccination, thus immunization rates dropped. The Russian Ministry of Health was slow to respond to the negative publicity and subsequently, a negative attitude toward vaccination developed. The government tried to counteract this negative attitude but did not succeed. In 1991, 1,876 cases of diphtheria were reported and initial estimates indicate that only 50-70% of infants were appropriately immunized against the disease.

The epidemic also raises questions about vaccine efficacy and its contribution to the current outbreak. The Russians use a reduced-potency vaccine for routine use in children because they are extremely concerned about adverse reactions. According to the Center for Disease Control (CDC), microbiological peculiarities of the circulating strains may also play a role. The CDC is sending an investigator to work with Russian scientists studying these strains. In addition, a a study of vaccine efficacy is underway, including an examination of the country's cold chain, which may be a problem in outlying regions of the country.[i]

Table V shows the rate of diphtheria incidence in children from 1981 to 1992.j

Table V
Diphtheria Incidence among Children in Russia
Rate per 100,000 population

Year	0-2 years of age	3-6 years of age	7-14 years of age
1981	0.2	0.4	0.4
1983	0.5	0.9	1.2
1986	0.3	0.5	0.8
1991	1.0	1.8	2.3
1992	1.8	3.3	6.4

3. Vaccine Needs

At a recent meeting of international relief agencies, it was reported that twenty to thirty million doses of diphtheria containing toxoids may be needed to control the current outbreak in this region. WHO assumes that each newborn child will receive three doses of DTP. This number of routine doses of vaccine per child is similar to WHO Expanded Program for Immunization (EPI) recommendations which covers the first year of life. For a complete immunization series, five doses of DTP at 2, 4, 6, 18-24 months and 4-5 years of age are required. Based on WHO's immunization schedule, to bring all infants up to date up to seven million doses of DTP will be needed.

4. Russian Manufacturers

Mechnikov Enterprise for the Production of Medical Biological Preparations, BIOMED, located in Moscow is a seventy year old public company with 1300 employees. It manufactures eighty products including diagnostics, media, blood products and bacterial vaccines. Recently, BIOMED and Upjohn formed a joint venture to fill and package vitamins in a new plant on BIOMED's campus.

Historically, BIOMED produced approximately half of the DTP vaccine needs of the former Soviet Union. A second vaccine plant is located in Ufa. BIOMED's production in 1992 was estimated at 10 million doses of DTP, about 50% of its planned capacity, 14.8 million doses of diphtheria-tetanus, 9.2 million doses of tetanus and 2.8 million doses of monovalent diphtheria vaccine.

-,2

The plant is old and in disrepair. Due to financial limitations, they have been unable to purchase media components, disposable supplies, and spare parts or equipment replacements. The newly installed packaging line for Upjohn vitamins is a stark contrast to the rest of the facility.

BIOMED's DTP vaccines meet the quality standards of the Tarasevich Institute. Though they claim to meet WHO specification, scattered reports of poor quality with the vaccine and bad press have been generated.

5. Cold Chain Distribution System

While the health system in the former Soviet Union has many strengths, including a dedicated and disciplined staff and good access and utilization of services, the cold chain is not impressive. A cold chain consists of the equipment, procedures and people for receiving, storing, handling, and distributing vaccines at proper control temperatures. Vaccines are sensitive to heat, and some toxoids are also damaged by freezing.

The cold chain consists of many links from the manufacturer to the endpoint where the child is vaccinated. A break anywhere along the chain can result in a loss of potency. To protect children, an immunization program must first protect the vaccine. A growing number of health staff in the former Soviet Union have come to realize that the cold chain is severely deficient.

In many places in the CIS, vaccine is "pushed" down the system due to lack of proper refrigerators, often to make room for new vaccine shipments. The risk of vaccines accumulating at increasing lower levels of the cold chain and expiring before they can be used is probably high. In the Central Asian Republics, in order to cope with the poor cold chain, vaccination activities are suspended during the hot summer months and many extra booster doses of vaccine are given to compensate for the state of the cold chain.

6. Distribution and Wastage Factors

Vaccine wastage factors vary according to a) the number of doses per vial or ampoule, b) the number of children available for immunization after the container is opened, and c) the policy for storing and using vaccine after first opened. Packing sizes are not always the same for Russian-produced vaccines and those from the outside. Furthermore, the birth rate varies considerably among different regions of the NIS and the distribution of families between urban and rural areas. These factors also effect the calculation of wastage. According to WHO, four doses of DTP

must be purchased for every three administered. Although the use of a single estimate of wastage for each vaccine may not be valid, a factor of 33% will be used in determining the capacity of a new production facility.

E. Polio Vaccine

1. Background

Poliovirus Vaccine Live Oral Trivalent is a mixture of three types of attenuated polioviruses (Types I, II, III) that have been propagated in monkey kidney cell culture. The final vaccine is diluted with a medium containing sorbitol or magnesium chloride. The immunization series for oral polio vaccine is administered at two, four, six, and 18-24 months of age.

Poliomyelitis, inflammation of the gray matter of the spinal cord, is an acute viral disease characterized by fever, sore throat, vomiting, headache, and often stiffness of the neck and back. It is endemic throughout the world but has occurred in epidemics in certain countries, including the U.S. In countries where the vaccine in not widely used, epidemics are seasonal, occurring in summer and fall. Children are more susceptible than adults and the infection is spread by direct or indirect contact of infected persons or convalescent carriers. The virus probably enters the body via the mouth and reaches the central nervous system through the blood. Onset is similar to a severe cold accompanied by fever and paralysis may or may not develop.

2. Current Market Situation

The incidence of poliomyelitis is relatively low in the CIS but may be on the rise. The CIS nations are witnessing the recurrence of paralytic polio. Accurate case recordings from other nations are not available but it is estimated that a total of 300 cases occurred throughout the CIS in 1991. This is four times greater than in 1989. Seventy-two cases were reported by these countries in 1992. Azerbaijan and Ukraine had seventeen and twelve cases respectively and Russia had nine. A significant increase in morbidity has occurred in Azerbaijan, Armenia, Uzbeckistan, and Turkmenistan. An investigation of an outbreak in Azerbaijan indicated that more than 41% of the children who became sick had not been vaccinated, and 37% did not have vaccination certificates.[1]

Significant increases have occurred in the Central Asian regions due to system-wide problems with distribution in these areas, the import of the virus from Pakistan and India, and general resistance to vaccination. With the worsening economical and political situation and the greater mobility of the population since the collapse of the Soviet Union, the incidence of infectious disease is likely to increase. Wild polioviruses are known to be circulating in the environment.

Immunization rates in Russia have remained relatively stable due to a constant supply from the Institute of Poliomyelitis and Viral Encephalitis who has provided all the polio vaccine to the former USSR, Eastern Europe and some parts of Asia. Vaccine supplies to other CIS nations have dwindled not due to the lack of supply but to limited financial resources within each State to purchase the vaccine.

3. Vaccine Demand

The annual level of need for polio vaccine is difficult to estimate. Under current Russian vaccination schedules, seven doses of oral polio are given between birth and age 15. While this is more than the West, the Russian vaccine is also considerably less potent than the U. S. equivalent which requires only five doses for immunization. In the CIS, it is estimated that fifty million doses of polio will be need annually.

The number of routine doses of vaccine per child is similar to the WHO EPI recommendation which requires each newborn child to receive four doses of OPV in its first year. It is estimated that to bring all infants in the region up to date according to WHO's immunization schedule, up to 10 million doses of OPV will be needed.

4. Russian Manufacturers

The Institute of Poliomyelitis and Viral Encephalitis is the only producer of polio vaccine in the Russia and former Soviet Union. The Institute, which is forty years old is part of the National Academy of Sciences. The institute was a key participant in the trials of the Sabin vaccine that led to widespread use of this vaccine throughout the world. It played a major role in the original testing of the Sabin vaccine and is well respected in Russia. The institute has been well supported over the years by the former Soviet government and has received token reimbursement for vaccine that was distributed. Other products manufactured at the Institute are rabies, Japanese encephalitis, tick-born encephalitis and yellow fever vaccines. Measles was previously produced but discontinued due to lack of government need. Reinstitution of production is possible but

significant upgrades in technology and equipment will be necessary. They are also working on a Hepatitis A vaccine.

The Polio Institute is approximately 30 kilometers west of Moscow proper. The Institute is in the center of the environmentally protected "Greenbelt." The government has restricted new development of this area and it is uncertain whether future development of the Institute's surrounding land is possible. Currently, the Institute owns 15 hectares (37 acres) of land that is sufficient for current use.

The Polio Institute also provides a living campus for many of its 1000 employees (50% production and 50% research). This campus includes housing, schools, post office, etc. for 1500-2000 people.

Polio vaccine production capacity exceeds 100M doses annually though they only produce 70-80M currently. Capacity was sufficient to cover the need of all states in the former USSR with exports to Eastern Europe, India, and Asia. Shortages in vaccine such as those in the Ukraine were influenced by financial problems, ie. new budgets in the States and transfer of monies, and not due to supply. In the recent past, however, production has decreased due to lack of funding to purchase monkeys, materials, supplies, and modernize equipment. The low price of vaccine in rubles did not permit appropriate financing.

Many of the personnel in both manufacturing and research have been at the Institute since the early days. They are extremely experienced and have strong scientific knowledge. However, in order to make the polio production more efficient, new approaches and technologies will need to be installed. Attempts have been made to institute GMPs, however the production process does not meet US standards.

5. Cold Chain Distribution System

Currently, no formal distribution or cold chain exists for polio. Based on U.S. and WHO standards, polio vaccine must be kept frozen with minimal number of freeze-thaw periods but in Russia, product is shipped unrefrigerated by air to the 88 Russian regional health authorities. On occasion, depending on distance, dry ice may be used. Local distribution is difficult since no refrigerated trucks are available, thus product is shipped at ambient temperatures.

The storage claim on the polio package reads as follows:

- 20°C for 24 months
+ 4°C for 6 months
+22°C for 21 days
+30°C for 7 days

6. Distribution and Wastage Factors

It is believed that the current regimen of seven OPV doses is needed in Russia to compensate for problems with the cold chain, ineffective immunization and inadequate coverage in some populations. According to WHO, four doses must be purchased for every three doses of OPV administered, hence, a wastage factor of 33 % will be used for planning production demands.

Section III

REGULATORY OVERVIEW

III. Regulatory Overview

A. National Control Authorities and Regulating Bodies

1. Ministry of Health

Under the former Soviet Union, all control institutes and all aspects of research, production, distribution, administration of medical products and other areas of public health were organized under the All Union (USSR) Ministry of Health (MOH). The All Union MOH coordinated activities with the MOH in each of the various Republics. With the breakup of the USSR, the Russian MOH inherited the functions of the All Union MOH.

In January, 1992, the Ministry was split into the Russian Ministry of Health and the State Committee for Sanitary and Epidemiological Surveillance. Standardization and control of drugs remained under the Russian MOH while regulatory authority of vaccines and the national regulatory laboratory, the Tarasevich Institute, was placed under the State Committee for Sanitary and Epidemiological Surveillance. The MOH, however, retained the finance aspects of public health including financing of vaccine production, direction on vaccine pricing, and financing of immunization programs while the State Committee controlled research and clinical aspects.

2. State Committee on Sanitary and Epidemiological Surveillance

The Chairman of the State Committee for Sanitary and Epidemiological Surveillance of the Russian Federation is appointed by the President of the Russian Federation and is currently Dr. Eugeni Baljeav. Under the State Committee is the Commission on Medical Biologics and Disinfectants. The Commission functions as an "advisory committee" to the State Committee on regulatory and related issues. Its members are independent experts who are invited from all possible institutes to discuss and contribute to the policy and procedures of the Commission. The Commission is further divided by areas of expertise including 1) bateriologicals, vaccines, and diagnostics, 2) viral vaccines and diagnostics, and 3) allergens and non-infectious diagnostics.

The tasks of the State Committee are as follows: m

- develop concept and strategy of the State policies in the field of sanitary and epidemiological well-being of the population and participating in the implementation thereof;

- standardize sanitation and hygiene and improve legal regulation of public health protection issues in view of man being affected by unfavorable factors of his habitat and conditions of his vital activities;
- manage State Sanitary and Epidemiological Service of the Russian Federation and improve organization and enhancing efficiency of the State;
- identify priority policy direction and organize research activities related to securing the well-being of the population.

The State Committee's responsibilities encompasses:

- Regulatory Control
  FDA related: Immunobiologics, vaccines, disinfectants, cosmetics, and food safety
  EPA related: Pesticides
- Public Health
  CDC Related: Epidemiology
  OSHA Related: Occupational Safety

3. Tarasevich Institute

The L.A. Tarasevich State Research Institute for Standardization and Control for Medical Biological Preparations was established in 1918 and evolved to become the national control authority for biologics in the former USSR. Under the new system it reports to the State Committee for Sanitary and Epidemiological Surveillance and also works through an outside advisory committe to make recommendations for licensing products. It is not constituted by law and issues no binding regulations but it does publish a set of requirements against which it reviews products. The Tarasevich is responsible to and collaborates with the State Committee through the Commission.

The role of the Tarasevich is to evaluate 1) medical biological preparations used in treatment, 2) vaccines and immunologicals, and 3) allergen preparations. The scope of products regulated by the Institute includes vaccines, live viruses and bacteria, immunodiagnostics, allergenics, bacterial flora used as a therapeutic, bacteriophage therapeutics, and biologic response modifiers used for the prevention of disease. Modifiers used for treatment are regulated as drugs, although the Institute may be consulted regarding production. The Institute does not regulate blood components for transfusion and the only human blood products regulated are immune globulins and leukocyte interferon used for prophylaxis. Lymphokines and interferons are approved by the

Pharmacological Committee but the Tarasevich issues approvals if these products are used in treatment.

The Tarasevich has 340 employees, including 156 scientific professionals and technicians. The Insititute is divided into six departments with twenty three laboratories. These departments include:

- *Department of Bacteriological Vaccines* - Testing and evaluation of BCG, bacteriological vaccines, toxoids, and serum preparations, immunoglobulins, and special pathogens including anthrax, brucellosis, tularemia and bacteriophage. Pyrogen testing is performed but not limulus/rabbit testing.
- *Department of Viral Infections* - Evaluation of diagnostics and vaccines for Adenovirus, Hepatitis A, MMR, interferon, influenza and parainfluenza, and acute respiratory infections.
- *Department of Control of Medical Biologicals* - Evaluation and testing of:
  Lab A: Arbovirus, rotavirus, HIV and rickettsiae
  Lab B: Rabies, vaccinia smallpox, and vector viruses
  Lab C: Sterility testing, contaminants, mycoplasma, viral content, Hepatitis B and C
  Lab D: Standards control, review of manufacturing data, and inspections
- *Department of Diagnostic Preparations* - Elisa and other diagnostic test kits and bacteriological media
- *Department of Epidemiology* - Epidemiological assessment (safety and efficacy) of viral and bacterial vaccines, clinical trials monitoring, monitoring of post vaccination complications.
- *Department of Common Methods of Control* - Physical methods including residual moisture testing, biochemical methods (protein content), biotechnological methods (molecular biology, DNA content, HPLC) and laboratory of allergens including immunological group, allergen lab and lymphokines.

Tarasevich Institute reviews applications for preclinical trials and for clinical efficacy trials to determine which studies should be done. In addition to testing vaccine samples, the Institute organizes and manages these efficacy trials; manufacturers are not allowed to generate their own efficacy data. The Institute also receives licensing applications and makes recommendatins to Russia's Committee on Sanitary and Epidemiological Surveillance regarding approval. These recommendations are reviewed by the Commission on Medical and Immunological Preparations whose Board and subcommittes include executives from production companies and institutes.

Currently, the Tarrasevich Institute is not functioning as an arms-length regulatory agency. The scope of the approval process consists largely of testing products to determine consistency with standards to World Health Organization requirements. Because WHO's standards are those of whichever country is carrying out the assessment, the process is circular and the certification represents Tarasevich's own judgments. In part, review by a committee structure includes management by the producers themselves.

B. New Product Development

Currently, research laboratories (Developers) submit new product samples and data to the Tarasevich Scientific Council for review. The Tarasevich makes recommendations and the Commission can approve or deny a limited clinical trial. Limited trials are carried out at the State Committee's Institutes. Upon completion of the clinical trial, the Tarasevich reviews the data and makes another recommendation to the Commission which can either approve or deny field trials. While the field trial approval is pending, the State Committee's Institute and the manufacturer will develop the necessary quality of product for the field trial. Field trials are not performed by the Developer of the product but by the State Institutes and the manufacturers. At the completion of the field trial, a full application is submitted to the Tarasevich. The Tarasevich may perform additional field testing and then all results are submitted to the Scientific Council. The Council reports its findings to the Advisory Commission of the State Committee. Final approval to license the product rests with the State Committee.

C. New Product Approval

For new products, all materials are submitted to the Commission which functions as a new product advisory commmittee for the State Committee. The Tarasevich Institute is responsible for the review of the application which includes sample evaluation, laboratory testing, and review of documentation, data, and protocols. Based on the Tarasevich evaluation, the Commission can grant authority for limited trials and larger field trials. Limited safety and immunogenicity studies are performed by the developer of the product. All samples should be tested by the Tarasevich Institute and results are given to the Commission for batch approval.

Licensing requirements include submission of three consistency lots and performance of clinical studies. These studies are done by the Institute, not the manufacturer. Lot release testing is not done on every batch as in the US but is planned for about 10% of the batches produced. For

expensive or hard to do tests like the neurovirulence test for polio vaccine, joint tests are performed by the Institute and the manufacturer.

D. Production and Inspections

The staff of the Tarasevich Institute performs production inspections. Those who work on the specific products visit facilities and make recommendations but the Tarasevich has no right to recall product although they can suspend production . Only the Ministry of Health and the State Committee can stop or close production. Presently, approximately 10% of production batches are submitted to the Tarasevich for testing. No pre-release testing exists and no infrastructure to support a 100% pre-release testing program is currently available.

23

Section IV

VACCINE MANUFACTURING FACILITY

IV. Vaccine Manufacturing Facility

Executive Summary

Sections IV, V, and VI of this document summarize the findings of the facilities and engineering portion of the Newly Independent States (NIS) Vaccine Production Feasibility Study. This work was performed in support of Lederle-Praxis Biological's evaluation of the cost and feasibility of developing a Bulk Batching, Filling and Packaging facility for Diphtheria, Tetanus, and Pertussis (DTP) and Oral Polio Virus (OPV) vaccines in the NIS.

The purpose of the facilities and engineering portion of this study was as follows:

- To provide a written report on the findings of this study which includes engineering details, an environmental impact assessment, and cost estimate with associated cash flow estimate
- To provide a facilities and engineering risk assessment that identifies the potential challenges of investing in this venture

The study was conducted between January 1993 and August 1993. Visits to Moscow area of Russia were made from May 22 - 30, 1993. Primary consultants included the following: Flad & Associates, Inc., Affiliated Engineers Inc., Environmental Resources Management (ERM), John Brown Engineers & Consultants Limited (JBEC), and Saphec.

The findings and recommendations of the facilities and engineering study include both a broader set of conclusions that relate to the overall Moscow Region, or Russia in general, as well as to a more site-specific set of conclusions. The findings are summarized below:

- A GMP facility in Russia is likely to cost approximately the same as it would to build in the US, despite lower local labor and material costs of the items assumed in this study. The main causes for the off-setting higher cost are 1) additional labor required to ensure the quality necessary to meet US GMP (Good Manufacturing Practice) and Russian design standards for vaccine production, and 2) additional costs of importing supervisory or specialty labor and specialty materials, as assumed in the estimate.

- The majority of the materials for general shell construction and base utilities can likely be

sourced locally. Finish materials, specialized equipment and cleanroom materials will probably need to be imported. Labor can be local and will require imported supervision to ensure the necessary quality to meet GMP. Specialty construction such as process piping arc welding will need to be imported. However, the decisions to buy materials and/or use labor either locally or imported should be made on a case-by-case basis.

- Due to startup timing, cmmunication issues, cultural differences, training requirements, and additional validation issues, facility construction will likely take longer by at least one year than anticipated domestically.

- Clear definition of the rights and liabilities of property and facility ownership is not likely in the near future and obscures both costs and business implications. Among the concerns are the following: 1) The Russian government decision to retain ownership of the property on which the site is located, and how this might affect current and future business decisions regarding the manner in which the facilities are used, 2) Other costs and responsibilities which might be incurred by this business venture in exchange for the right to construct this facility, 3) Liability for any potential environmental issues associated with past, current or future work on this site, 4) Inability to control future construction of facilities which may have negative air quality, traffic, or other environmental impacts next to the facility, and 5) Ability to acquire vacant land for future expansion.

- According to ERM, numerous nuclear reactors and nuclear waste storage areas are reported throughout the Russian Federation and the Moscow region in particular. ERM advises that this can be an issue given the rather questionable safety record of the former Soviet nuclear program.

A. Introduction

This feasibility study was performed to support Lederle-Praxis Biological's (LPB) evaluation to determine the feasibility and cost of developing a Bulk Batching, Filling and Packaging facility in the Newly Independent States (NIS).

1. Assumptions

The assumptions used for this study included the following:

- The facility must meet US GMP and relevant NIS design and building standards.
- The facility should be designed to accommodate production of up to 30 million doses per year for both OPV and DTP.
- The study was to focus on existing operations and processes and current technology.
- Entirely new processes will not be examined since they will require significantly more time and potentially have a major regulatory impact.
- The distribution of product after manufacture will not be addressed. It is recognized that the "cold chain" system is in need of major overhaul, but is beyond the scope of this study. However, potential wastage factors due to product losses during distribution will be factored into the production demand.
- Only one site was evaluated.

The methodology for this feasibility study was to generate a set of program requirements for such a facility, to visit and assess the site selected by LPB, to develop a US-based proposal, cost and schedule, to have a contractor with Russian construction experience consult on the design, cost and schedule, and finally, to modify the proposed approach to minimize cost while achieving the quality required for these products. The end product includes an assessment of the perceived risks associated with the facilities and engineering aspects of the overall project.

Specific study deliverables include the following:

- Process flow diagrams
- Summaries of the required equipment, components, and specialized spaces including classified rooms, chillrooms, freezers, and incubators

- Detailed space list itemizing each area and staff member required, by department
- Summary of the proposed staffing and space required in the facility
- Technical data sheets for key areas in Quality Control Test Labs and Vivarium spaces summarizing the specific requirements for specific rooms
- A utility systems Basis of Design
- A regional and site analysis, and a current and proposed site plan
- Diagrammatic building plans for the manufacturing, quality control, warehouse and central utility plant buildings, including product flow diagrams
- A design assessment for constructability in Russia based on Russian regulations and construction practices, furnished by John Brown (JBEC) who have Russian building experience and Saphec, a Russian design consultant
- A cost estimate based on US production processes and rates
- A cost estimate conversion using Russian labor and materials where appropriate and assuming Russian construction practices, furnished by JBEC and Saphec
- A cash flow estimate for construction and a utility operating cost estimate, provided for LPB financial analyses
- An environmental impact assessment
- A "Site Survey" to provide data regarding the Russian site chosen, furnished by JBEC and Saphec
- A risk assessment that identifies the perceived risks of investing in this venture

The specific methodologies are explained in further detail in the respective sections.

B. Manufacturing Process Description and Flow Diagrams

The Process Flow Diagrams and key on the following pages include the following:

Process Flow Chart Key
DTP Bulk Batch Production
DTP Vial Fill
DTP Packaging
OPV Bulk Batch Flow
OPV Dispette Fill
OPV Dispette Pack
Shipping/Receiving Warehouse

The diagrams define activities, rather than rooms. The implication is that several steps may require moving into and out of a particular room. Generally, the charts are directional, with the left side of the diagram showing the beginning of the activities and the right side of the diagram showing the ending of the activities. As explained in the Process Flow Chart Key, the boxes which have dashed lines around them are activities which are outside the areas being defined. Classified areas are shaded and labeled as required.

An exception to the directional discussion in the paragraph above is the Shipping/Receiving Warehouse. Incoming material follows the same left to right pattern. However, it follows that the outgoing product must then flow from right to left. That sequence is shown on the lower half of the diagram.

Any given activity on these diagrams can be related to the Detailed Space Requirements for the respective departments in Section IV.C.5.

B. Manufacturing Process Descriptions

This section explains the process for manufacturing polio and DTP vaccines from bulk batching to filling and packaging. Each step represents a separate area in the production process and is identified in the flow diagrams. Manufacturing areas for DTP (bacterial) vaccine must be separated from polio (viral) vaccine production. Personnel involved with DTP manufacturing are not allowed to enter OPV production suites. Areas such media preparation, glassware washing, and warehouse can be shared.

1. Diphtheria-Tetanus-Pertussis Vaccine (DTP)

Bulk Batching

Diphtheria, tetanus, and pertussis concentrates manufactured by Lederle-Praxis Biologicals in Pearl River, New York are shipped in 20-40 liter bottles to Russia for bulk batching. Phosphate buffered saline, thimerosal solution, and aluminum phosphate are combined with the diphtheria, tetanus, and pertussis concentrates into a large tank for mixing and incubation over a two week period. The final bulk is proportioned into smaller drums and held at 2-8°C while awaiting internal and National Control Authority (Tarasevich or equivalent) testing releases.

The bulk is tested for sterility, potency, toxicity, and various chemical assays. The leadtime for bulk batching and release is approximately four to six months.

Vial Filling/Inspection

Incoming packaging components such as rubber stoppers, vials, and aluminum caps are inspected for physical characteristics such as height, width, inside and outside diameter, and potential cosmetic defects. Before filling, rubber stoppers are washed and autoclaved, vials are washed and depyrogenated in an on-line tunnel, transfer parts are setup on the filling line and each bulk drum is tumbled to resuspend the product. The bulk vaccine is filled into vials, stoppered and capped, and 100% inspected for cosmetic defects, low dose/volume, particulates and other quality defects.

The filled vials are tested for identity, sterility, safety and volume of injection. The leadtime for filling and inspection is three to four weeks.

40

Labeling and Packaging

Boxes, labels, and package inserts sourced for outside suppliers are inspected and released by quality control for physical characteristics and correct text. The vials are labeled with lot number and expiration date, boxed and package literature is inserted. Individual boxes are bundled and placed into shipping cartons. The final product is stored in a chillroom at 2-8°C until ready for sale.

A visual identity test is performed on the final package. The leadtime for labeling and packaging is one to two weeks.

2. OPV Manufacturing

Bulk Batching

Frozen released monopools of Type I, II, and III are shipped from Lederle-Praxis Biologicals, in Pearl River, New York in 100 liter drums to Russia for bulk batching. The frozen monopools are stored at -20°C until ready for use. The three monopool types, sorbitol and diluent are mixed in a large batching tank. The final bulk batch is dispensed into smaller drums and stored in freezer while awaiting quality control testing.

The bulk is tested for sterility and potency. The leadtime for bulk batching and release is one month.

Dispette Filling

Oral polio vaccine is filled into single dose dispettes (pipettes) for use. The dispette made of low density polyethylene resin is custom-molded, printed, and sterilized by cobalt irradiation. Incoming pipettes are inspected for physical characteristics, quality of print, and cosmetic defects. During filling, the thawed bulk is kept cold in a chill box and the dispettes are filled, crimped for the batch number, sealed. In process inspection includes dose volume, quality of crimp, crimp code, and cosmetic defects. The dispettes are put into pails and frozen until testing is completed and product is released.

Both internal and National Control Authority release testing are required on the filled dispettes. Testing includes identity, general safety and potency. The leadtime for filling and release is two to three months.

Dispette Packaging

Laminate, film, boxes, and literature are inspected and released for physical characteristics and correct text. Prior to packaging, the dispettes are thawed and re-inspected. The packaging line consists of a thermoforming station where polyester film is molded into a tray, a pick-and-place station where inspected dispettes are placed into the tray, an inserting station where the package insert is placed on top of the tray, a sealing station where a top laminate is sealed to the tray, and a cutting station where the tray is cut to size. A final inspection for low dose and quality of packaging is performed and trays are placed into boxes and cartoned. The product is stored in the freezer at -20°C until ready for sale.

A visual identity test is performed on the final package. The leadtime for packaging is one to two weeks.

The process flow charts on the following pages are intended to define the sequence of activities that occur in each stage of the DTP and OPV batch/bulk, fill and packaging activities. The intention of the flow charts is to define the requirements for the facility design, including relationships and required sequence of steps in the process.

Activity within the area

Activity outside the area

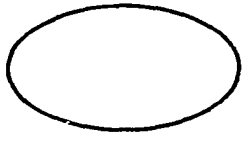

Quality Control Department testing required

National Control Authority (NCA) testing required

Quality Control Department release documentation

NIS Feasibility Study
Lederle- Praxis Biologicals

Process Flow Chart Key

October 1993

U3

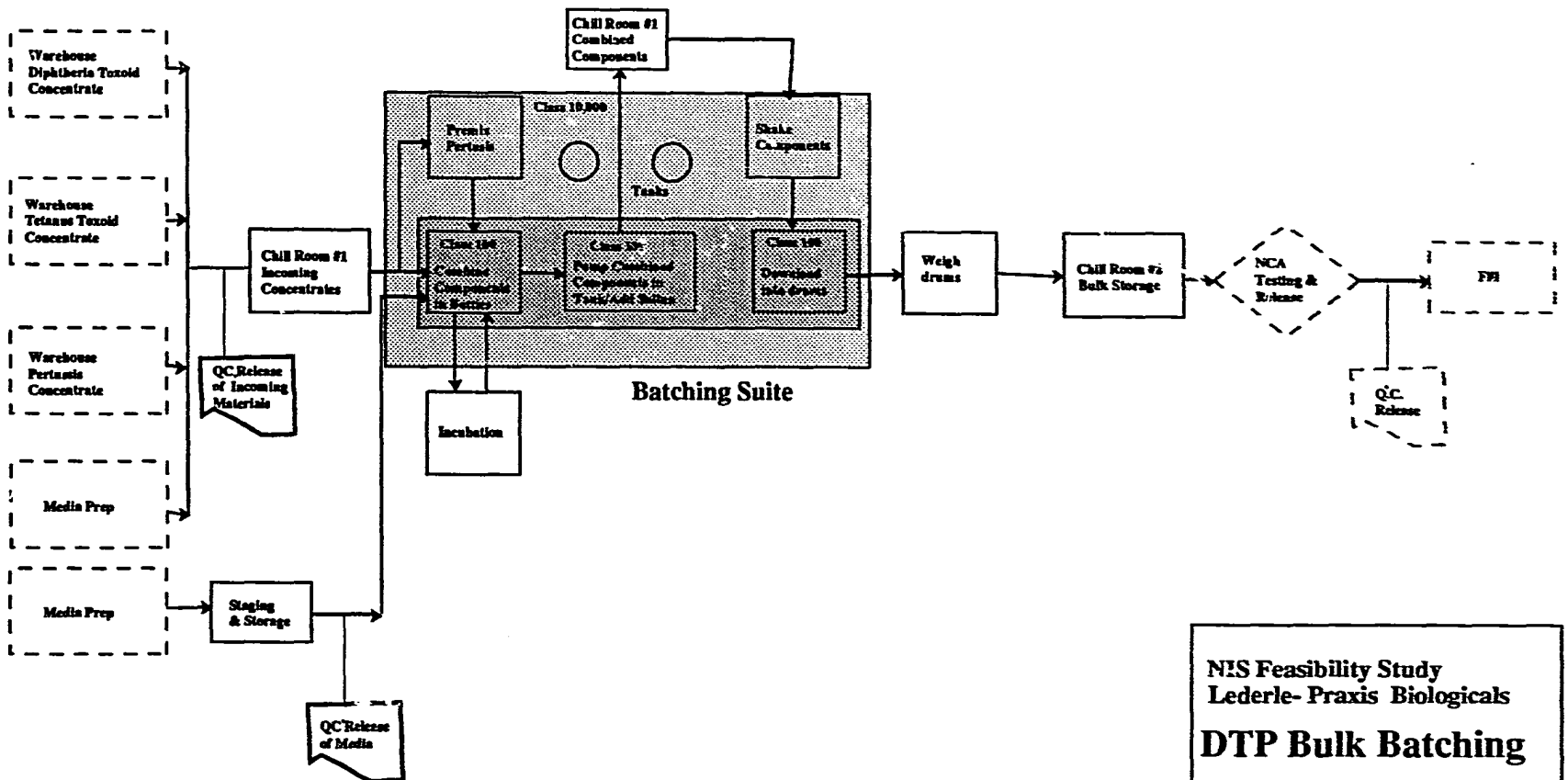

NIS Feasibility Study
Lederle- Praxis Biologicals

DTP Bulk Batching

October 1993

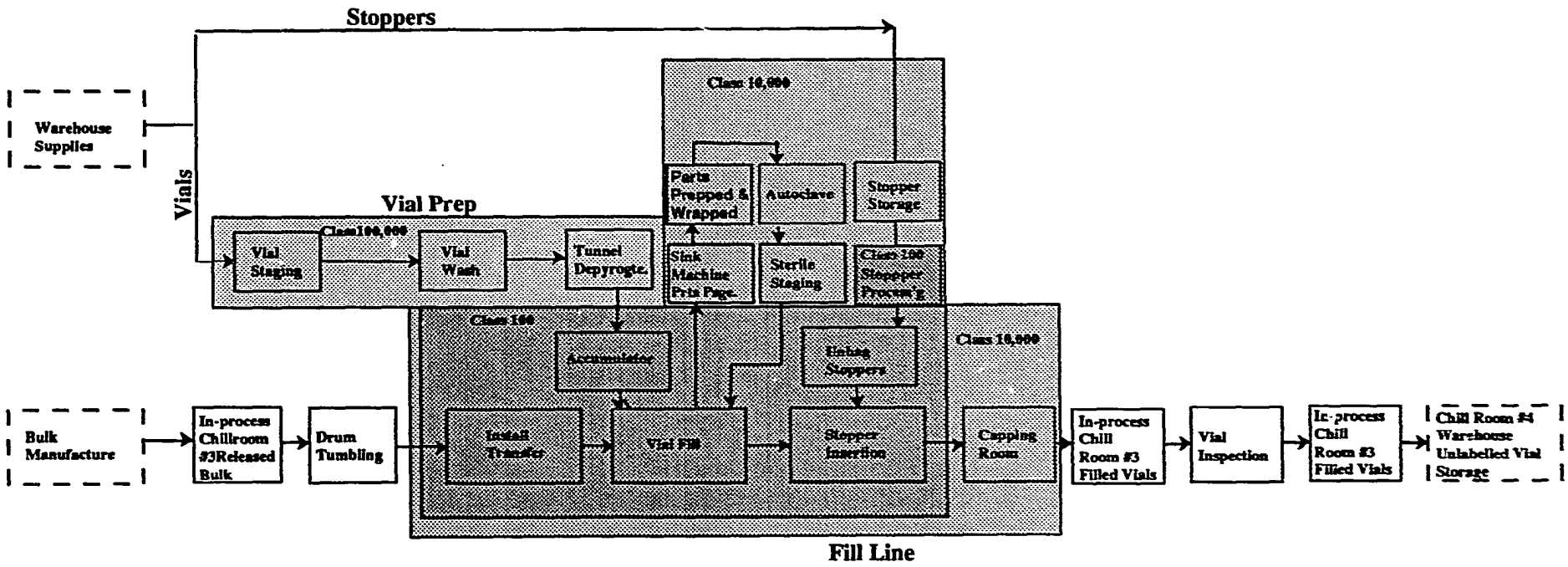

NIS Feasibility Study
Lederle-Praxis Biologicals

DTP Vial Fill

October 1993

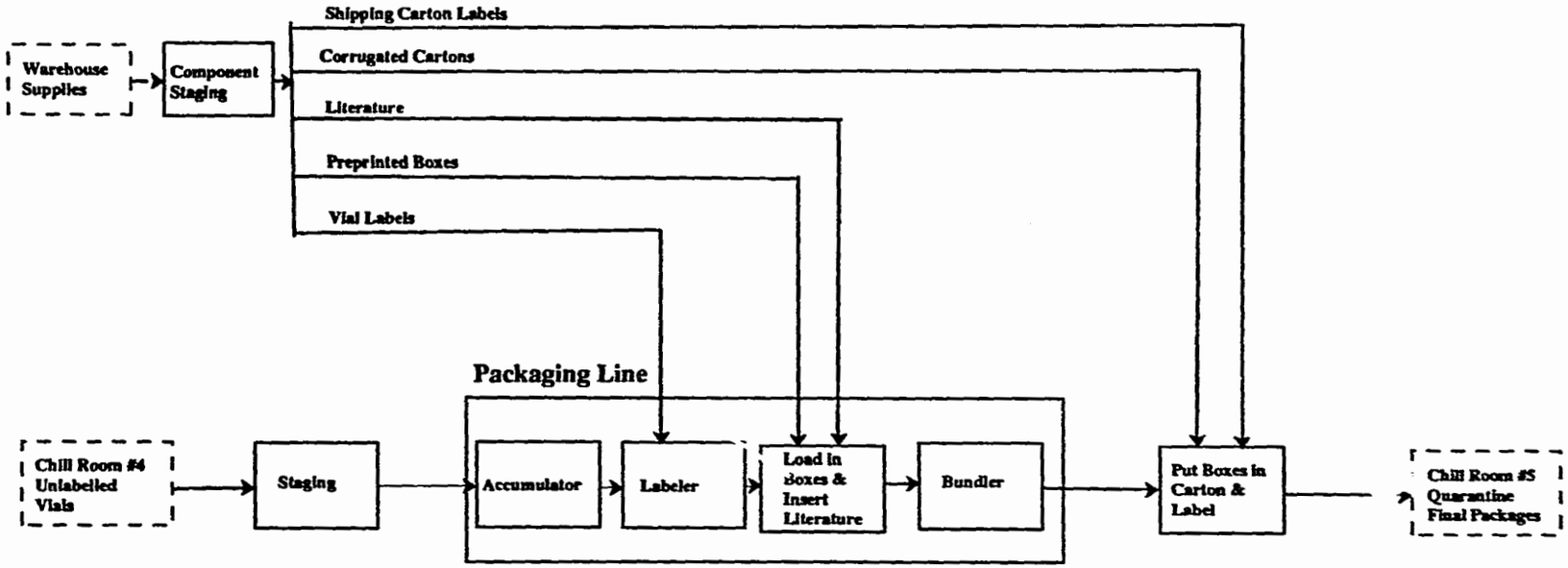

NIS Feasibility Study
Lederle- Praxis Biologicals

DTP Packaging

October 1993

46

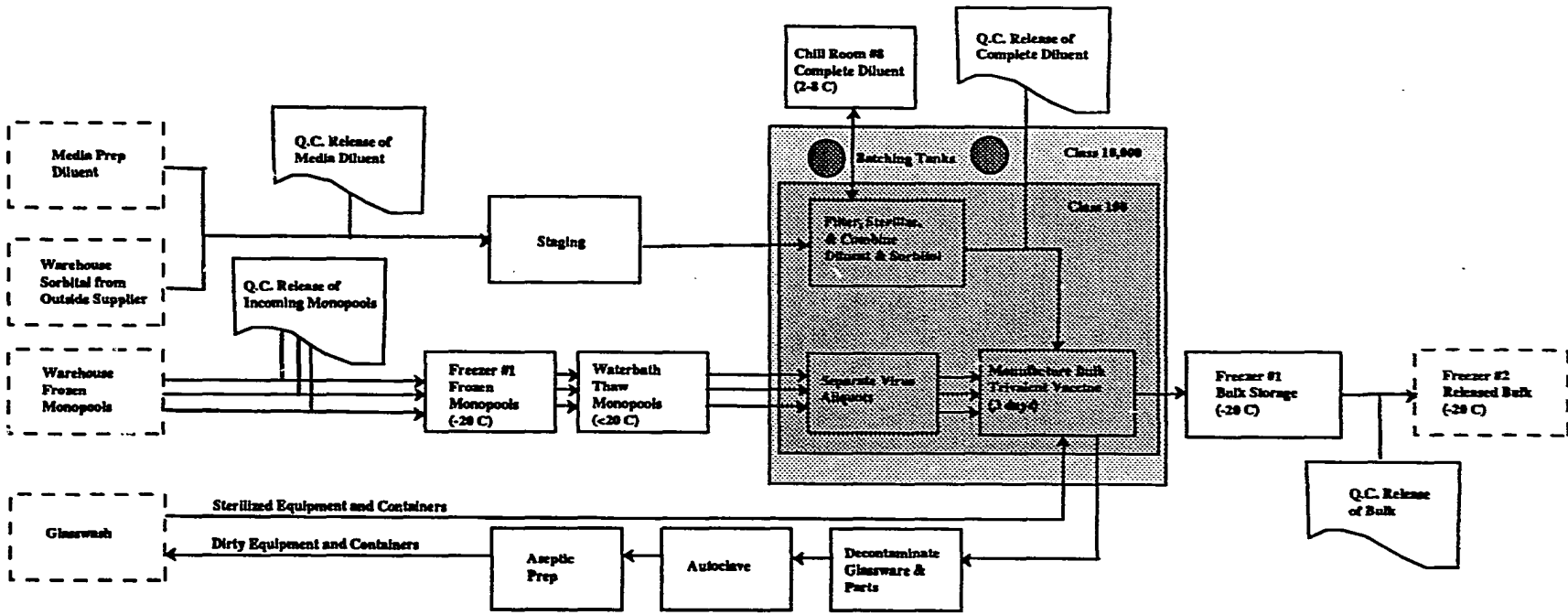

NIS Feasibility Study
Lederle-Praxis Biologicals

OPV Bulk Batching

October 1993

47

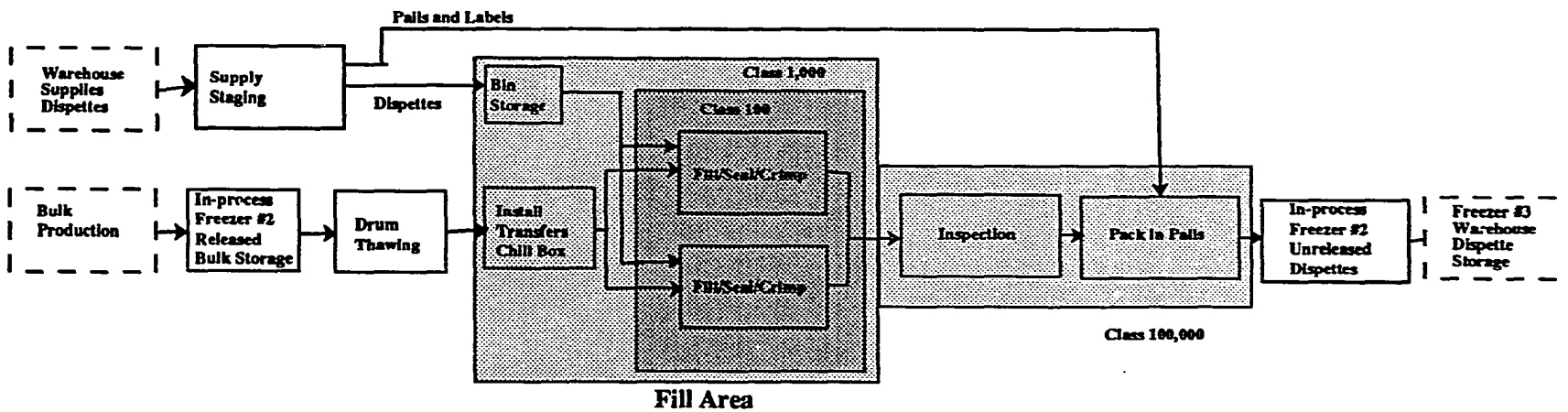

NIS Feasibility Study
Lederle-Praxis Biologicals

OPV Dispette Fill

October 1993

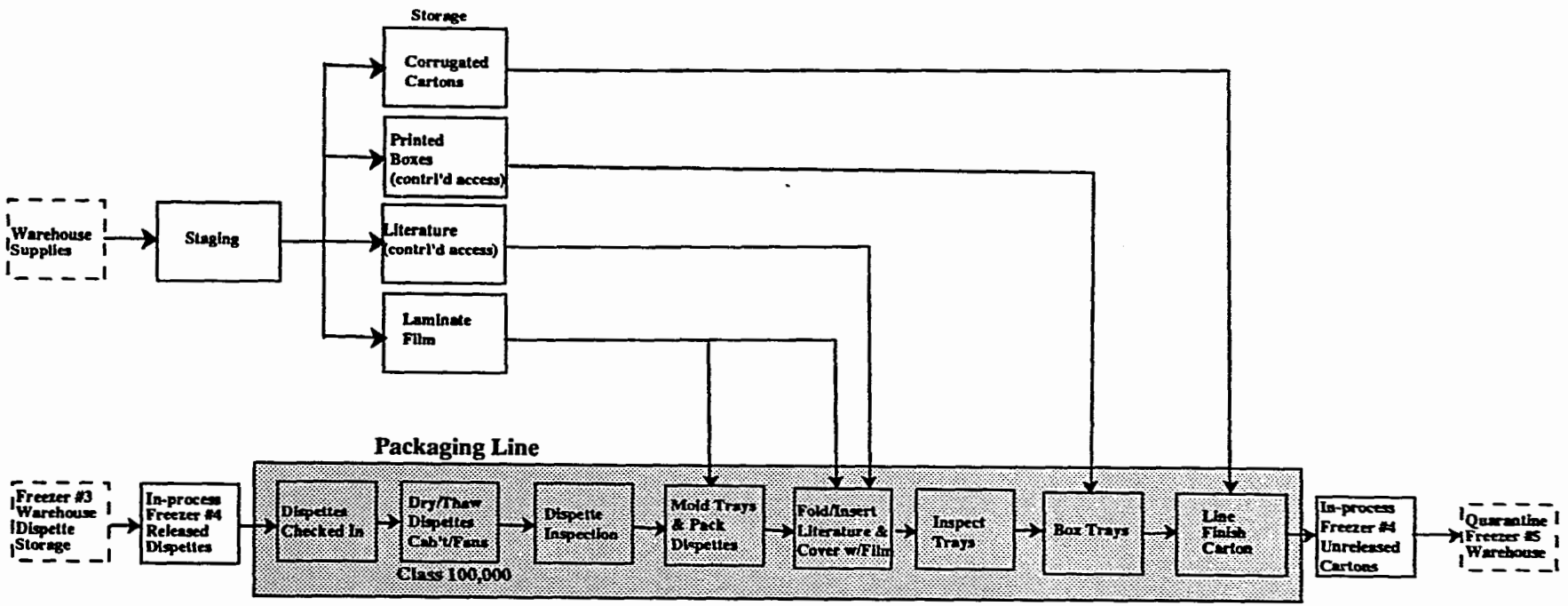

NIS Feasibility Study
Lederle-Praxis Biologicals
OPV Dispette Pack

October 1993

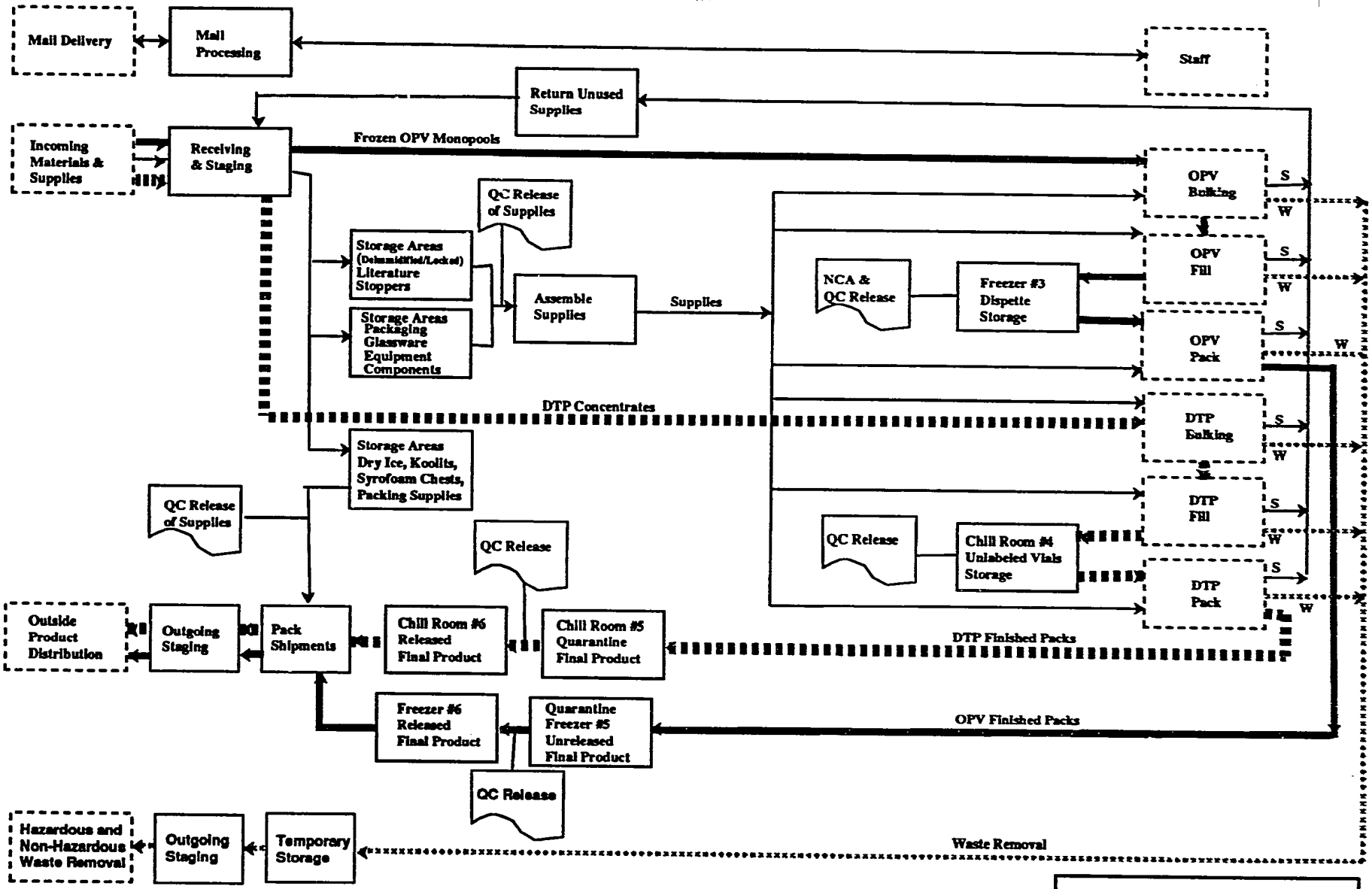

NIS Feasibility Study
Lederle-Praxis Biologicals
Shipping/Receiving Warehousing

October 1993

C. Staffing and Space Requirements

This section identifies the areas and staffing requirements for a facility to bulk batch, fill and package the oral polio vaccine (OPV) and the diphtheria/tetanus/pertussis (DTP) vaccine.

A variety of factors can influence the type of support needed and thereby increase or reduce the size or staffing requirements. Some of these include the types of utilities or other amenities already available on a site, etc. However, for the purpose of generating a baseline, the OPV and DTP bulk batch, fill and package facility was estimated from the standpoint of defining the most efficient, standalone facility possible.

1. Methodology

The process involved the generation of a preliminary space and staff listing and process flow diagrams for the OPV and DTP areas, general administration, warehouse and space and staff listings for the vivarium and QC testing labs. A database was generated in order to summarize the staff and space requirements. The Program Standards identified as the Program Key were used.

The summaries and detail were reviewed and modified in an effort to increase efficiency and reduce redundancy. Net square footages were calculated. The Space Requirements provide the detailed requirements by department. Efficiency factors which have been used in other LPB facilities were divided into the stated square footages in order to estimate the overall "gross" square footages/ meters required for this facility. Space summaries were generated by department and by type of building so that areas could be blocked out for building layouts and so that costs could be estimated by type of building area. Space and staff summaries by department are provided. A staff summary showing people by department and by type of office is also provided.

2. Assumptions

The following assumptions have been used in developing a facilities plan for the proposed bulk batch, fill, and pack operations.

1. The facility square footages estimated herein are intended to include all of the construction at a standalone site in NIS. Modifications should be made to the data if existing support facilities are available.

2. Departmental net to gross area conversions were assumed as follows:

OPV Process	50%
DTP Process	50%
Quality Control Testing	55%
Quality Control Animal Facilities	55%
Warehouse/MIS/Security	70%
Administrative Office	70%
Other Support	50%

3. An average of 40% is added within the NSF figures to office-type functions in order to accommodate intra-departmental circulation.

4. No expansion or unused space is assumed to be provided at this time. The facility will be

designed with flexibility so that expansion is possible.

5. We have assumed that this facility is a standalone operating unit which is adjacent to another similar complex. The implications are that all support facilities which are needed to support this facility are included in the enclosed estimate of space, and that utilities are readily available at the property line.

6. The NIS is undergoing a complete revision of regulations in the biological/pharmaceutical industry, in the environmental field, and most likely in the construction industry. In order to project a definitive set of regulations upon which this study is based, we have assumed US level cGMP standards of today, as well as US building and environmental regulations.

Manufacturing

1. Existing space and processes for current manufacturing were used.

2. Showers are included in the locker rooms assuming that additional care must be imposed in this facility to ensure cleanliness.

3. Freezers and Chillrooms are proposed to be separate rooms or in rooms which will make use of moveable partitions in order to ensure that no mixups will occur for released and unreleased product.

4. The glassware area can be shared between OPV and DTP. OPV will have a decontamination area within the OPV Batching area for OPV Batch or Fill use.

5. Media prep areas can be shared between OPV and DTP. Two sets of rooms are proposed, including the following:

   a) Media requiring sterile-filtering in a Class 100 environment
      - Aluminum Chloride
      - Thimerosal
      - Polio Diluent

   b) Media requiring autoclaving
      - Aluminum phosphate
      - Phosphate buffer
      - Sterile WFI
      - Phosphate-buffered Saline
      - Saline
      - Bacteriological media (Thioglicolate, TSB, TSA)
      - Miscellaneous

Quality Control Laboratory

1. The following testing labs are necessary based on the testing requirements for the OPV/DTP bulk batch, fill and pack operations:

   - Microbiology Lab
   - Chemistry/Biochemistry Lab

- Virology Lab
- BioPharmacological/Biopharmaceutical Lab

Quality Control Vivarium

1. Based on the assumption that the high quality healthy animals, mandatory to ensure quality test results, are not commercially available in Russia, Lederle-Praxis recommended that an on-site NIS animal breeding facility be included within the vivarium at the production facility.

   In this way, the animals could meet weight and health requirements for testing use and the site would have self-sufficiency for animal supply.

2. The animal breeding colony suites must be able to provide a barrier isolation in order to prevent cross-contamination of breeding stock.

3. The animal testing suite must be designed for controlled access, with personnel shower/locker room separate from the breeding colony suite.

Support/Warehouse

1. No automated high bay storage will be used and therefore the storage will occupy a larger floor area.

2. Printed materials including carton, boxes, literature, etc. will be vendor supplied, so that a print shop within the facility is not required although a dehumidified, locked storage area is required, as is a label inspection area.

3. A general maintenance shop is included, as well as one in the utility plant area.The assumption is made that the facility will be located in an existing plant site which has more extensive, centralized maintenance shops, e.g., instrumentation, electrical, plumbing, sheet metal.

4. It is assumed that LPB will need garage space for parking trucks. Existing staff at site will support ground maintenance.

Administrative Offices/Support

1. Office standards are based on those used in the U.S. These are referred to as Program Key, or Program Standards.

2. No provisions have been made for fitness facilities, daycare or clinic.

3. Acronyms

Acronyms used in this report are defined as follows:

NSF Net Square Feet. This is the floor area that is specifically identified for a particular use by a given department. It does not include inter-departmental circulation, building mechanical

rooms (except for the Central Utility Plant and associated offices), corridors, exterior wall space, etc. It is measured from the center line of interior walls and to the interior of exterior walls.

TNSF Total Net Square Feet. This is the sum of all of the relevant net square feet.

TNSM Total Net Square Meters.

GSF Gross Square Feet. This is the total square footage, including all walls, corridors, mechanical areas, etc. It is generally calculated by dividing the NSF by an "efficiency" factor. These efficiency factors are shown on page 3.04.07.

GSM Gross Square Meters.

4. Program Summary

The 193,000 net square feet of space which was calculated for the 200 staff members during this programming step represented approximately 965 square feet per person. This figure will provide large areas for storage of incoming materials, work-in-process and outgoing product.

An estimated 344,400 gross square feet had been allocated to the incoming and outgoing warehousing and support.

Overall, each of the bulk batch/fill/pack lines were estimated to require approximately 25,000 square feet (2300 square meters) of space. The Media Prep and Glassware area combined were another 23,000 square feet (2100 square meters). Administrative Office areas totaled 15,000 square feet (1400 square meters). A Quality Control Test Lab and Vivarium facility as defined would require 43,300 square feet (4000 square meters) of space.

Staff Requirements Summary

	CO1	CO2	CO3	WS1	WS2	WS3	Other	
Division Administrative Offices								
Managing Director's Office	1	0	1	0	0	0	0	
Manufacturing Director	0	1	0	0	0	0	0	
Regulatory	0	1	0	1	0	1	0	
Accounting & Finance	0	0	1	0	0	1	0	
Human Resources	0	0	1	0	0	0	0	
Technical Services	0	0	2	4	0	5	1	
Purchasing	0	0	1	2	0	0	0	
Marketing & Business Development	0	1	3	1	0	1	0	
Materials Management	0	0	1	2	0	0	0	
Management Information Services	0	0	1	1	0	0	0	
Division Totals	1	3	11	11	0	8	1	35
Division Manufacturing								
DTP Bulking	0	0	1	2	4	0	0	
DTP Fill	0	0	0	1	0	0	12	
DTP Packaging	0	0	0	1	0	0	7	
OPV Batching	0	0	1	2	1	0	2	
OPV Fill	0	0	1	1	0	0	11	
OPV Packaging	0	0	0	1	0	0	14	
Media Prep	0	0	0	1	6	0	0	
Glassware	0	0	0	1	0	0	6	
Division Totals	0	0	3	10	11	0	52	76
Division Quality Control								
QA / QC Administration	0	1	2	5	2	0	0	
Testing Laboratories	0	0	3	0	19	0	0	
Vivarium	0	0	1	0	10	0	0	
Vivarium Support	0	0	0	0	0	0	0	
Division Totals	0	1	6	5	31	0	0	43
Division Support								
Office Communications	0	0	1	0	0	0	0	
Maintenance	0	0	0	1	4	0	0	
Security	0	0	0	0	6	0	0	
Shipping & Receiving Warehouse	0	0	0	3	6	1	0	
Lab Services	0	0	0	1	0	0	10	
Division Totals	0	0	1	5	16	1	10	33
Division Utility Plant								
Central Utility Plant	0	0	4	0	9	0	0	
Division Totals	0	0	4	0	9	0	0	13
Grand Totals	1	4	25	31	67	9	63	200

LEDERLE–PRAXIS BIOLOGICALS
NIS FEASIBILITY STUDY ORGANIZATIONAL CHART

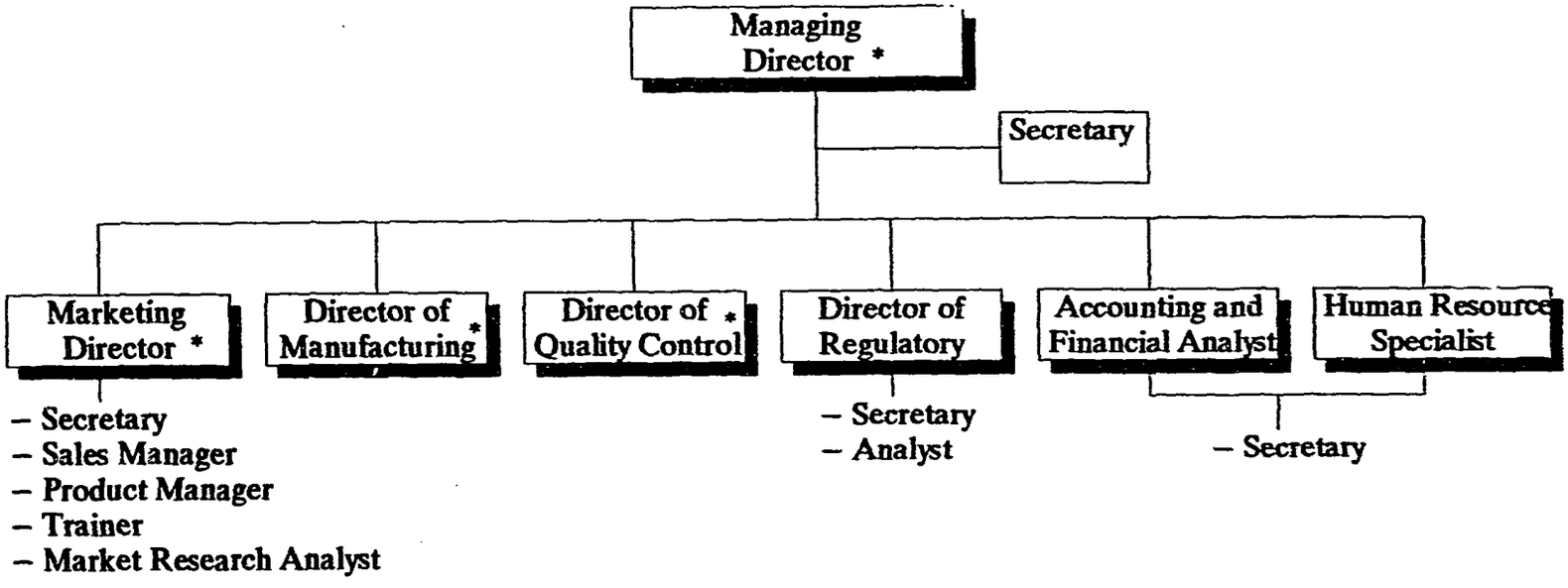

Key

• These positions will be selected by the US vaccine firm. Expatriots will startup the facility and train the employees on GMP's for a period of one to two years or such time that the Russians are qualified to operate it.

NIS FEASIBILITY STUDY ORGANIZATIONAL CHART

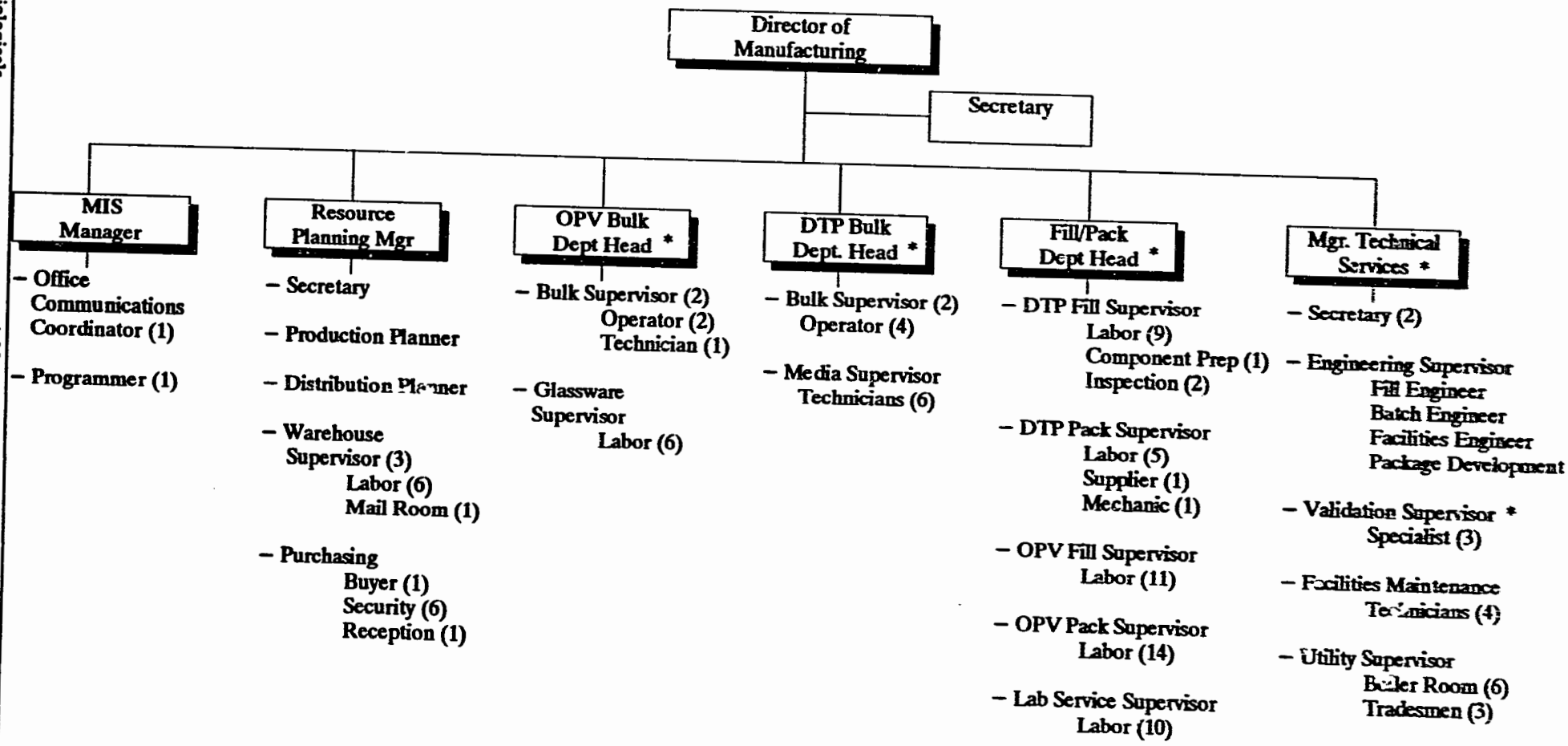

Key

* These positions will be selected by the US vaccine firm. Expatriots will startup the facility and train the employees on GMP's for a period of one to two years or such time that the Russians are qualified to operate it.

LEDERLE–PRAXIS BIOLOGICALS
NIS FEASIBILITY STUDY ORGANIZATIONAL CHART

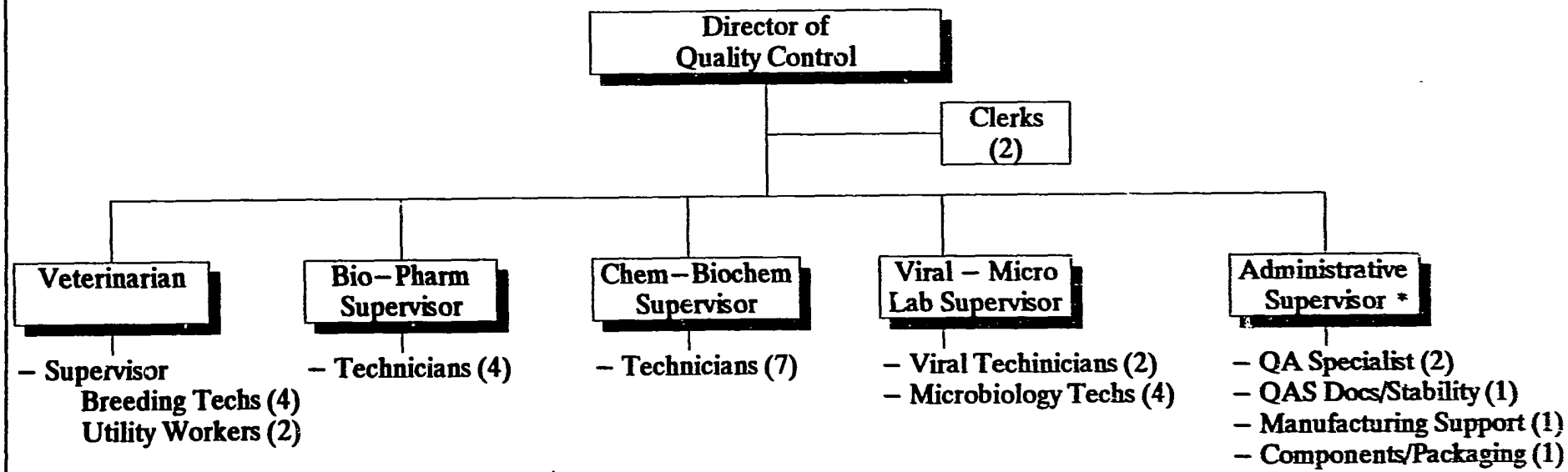

Key

* These positions will be selected by the US vaccine firm. Expatriots will startup the facility and train the employees on GMP's for a period of one to two years or such time that the Russians are qualified to operate it.

Space Requirements Summary

	Staff	NSF	%Eff	GSF	GSM
Division Administrative Offices					
Managing Director's Office	2	1,036	70%	1,480	137.5
Manufacturing Director	1	210	70%	300	27.9
Regulatory	3	958	70%	1,368	127.1
Accounting & Finance	2	776	70%	1,108	102.9
Human Resources	1	756	70%	1,080	100.3
Technical Services	12	2,592	70%	3,703	344.0
Purchasing	3	948	70%	1,354	125.8
Marketing & Business Development	6	1,812	70%	2,588	240.4
Materials Management	3	448	70%	640	59.5
Management Information Services	2	1,028	70%	1,469	136.5
Division Totals	**35**	**10,563**		**15,090**	**1,401.9**
Division Manufacturing					
DTP Bulking	7	6,110	50%	12,220	1,135.2
DTP Fill	13	4,070	50%	8,140	756.2
DTP Packaging	8	2,240	50%	4,480	416.2
OPV Batching	6	6,472	50%	12,945	1,202.5
OPV Fill	13	2,398	50%	4,796	445.5
OPV Packaging	15	2,730	50%	5,460	507.2
Media Prep	7	5,596	50%	11,192	1,039.7
Glassware	7	5,990	50%	11,980	1,112.9
Division Totals	**76**	**35,606**		**71,213**	**6,615.4**
Division Quality Control					
QA / QC Administration	10	2,363	70%	3,375	313.6
Testing Laboratories	22	9,300	55%	16,909	1,570.7
Vivarium	11	6,156	55%	11,193	1,039.7
Vivarium Support		6,486	55%	11,793	1,095.5
Division Totals	**43**	**24,305**		**43,270**	**4,019.5**
Division Support					
Office Communications	1	168	70%	240	22.3
Maintenance	5	2,842	50%	5,683	527.9
Security	6	269	70%	384	35.7
Shipping & Receiving Warehouse	10	26,386	70%	37,694	3,501.6
Lab Services	11	290	70%	414	38.5
Division Totals	**33**	**29,954**		**44,416**	**4,126.0**
Division Utility Plant					
Central Utility Plant	13	19,000	100%	19,000	1,764.9
Division Totals	**13**	**19,000**		**19,000**	**1,764.9**
Grand Totals	**200**	**119,428**		**192,988**	**17,927.7**

59

5. Space Requirements

Division Administrative Offices

Department Managing Director's Office

Function

Establish overall direction for the facility; serve as liaison to LPB/US; public relations role for LPB in the NIS.

Relationship criteria

Essential: adjacency to other Administrative offices.

Special needs

None.

Future conditions

None.

Personnel & Spaces	Key	#Staff	#Spaces	NSF	TNSF	TNSM	Comments
Director	CO-1	1	1	200	200	18.6	
Secretary	CO-3	1	1	120	120	11.1	
Copy / Files / Mail	CFM		1	120	120	11.1	
Conference Room	CR-1		1	300	300	27.9	
Staff		2					
Direct Net Square Feet					740	68.7	
Intradepartmental Circulation					296	27.5	
Total Departmental Net Area					1,036	96.2	
Efficiency					70%		
Total Departmental Gross Area					1,480	137.5	

5. Space Requirements

Division Administrative Offices

Department Manufacturing Director

Function

Responsible for overseeing manufacturing of DTP and polio vaccines.

Relationship criteria

None.

Special needs

None.

Future conditions

None.

Personnel & Spaces	Key	#Staff	#Spaces	NSF	TNSF	TNSM	Comments
Director	CO-2	1	1	150	150	13.9	
Secretary	WS-3			64	0	0.0	Share w/ Regulatory
Staff		1					
Direct Net Square Feet					150	13.9	
Intradepartmental Circulation					60	5.6	
Total Departmental Net Area					210	19.5	
Efficiency					70%		
Total Departmental Gross Area					300	27.9	

5. Space Requirements

Division Administrative Offices

Department Regulatory

Function

Interacts with regulating bodies regarding product registration, batch releases, testing requirements, inspections, etc.

Relationship criteria

Desireable; access to Quality Control administrative office and to Materials Management.

Special needs

Access to computer databases in Washington (syndicated network system).

Future conditions

None.

Personnel & Spaces	Key	#Staff	#Spaces	NSF	TNSF	TNSM	Comments
Product / Process Regulatory	CO-2	1	1	150	150	13.9	
Analyst	WS-1	1	1	100	100	9.3	
Secretary	WS-3	1	1	64	64	5.9	
Copy / Files / Mail	CFM		1	120	120	11.1	
Conference Room	CR-2		1	250	250	23.2	Share w/ Eng'g & Valid'n
Staff		3					
Direct Net Square Feet					684	63.4	
Intradepartmental Circulation					274	25.4	
Total Departmental Net Area					958	88.8	
Efficiency					70%		
Total Departmental Gross Area					1,368	127.1	

5. Space Requirements

Division Administrative Offices

Department Accounting & Finance

Function

Maintain books of facility, year-end financial reporting, allocation of costs, taxes, payroll, etc.

Relationship criteria

Desireable: central location to administrative offices, especially Purchasing.

Special needs

Conference room access for internal/external audits.
Controlled access to Accounting Department.

Future conditions

None.

Personnel & Spaces	Key	#Staff	#Spaces	NSF	TNSF	TNSM	Comments
Accounting / Financial Analyst	CO-3	1	1	120	120	11.1	
Secretary	WS-3	1	1	64	64	5.9	
Copy / Files / Mail	CFM		1	120	120	11.1	
Conference Room	CR-2		1	250	250	23.2	Share w/Purch & Mtls Mgt.
Staff		2					
Direct Net Square Feet					554	51.3	
Intradepartmental Circulation					222	20.6	
Total Departmental Net Area					776	71.9	
Efficiency					70%		
Total Departmental Gross Area					1,108	102.9	

5. Space Requirements

Division Administrative Offices

Department Human Resources

Function

Hiring of all personnel, responsible for establishing and coordination benefits, training, etc.

Relationship criteria

Desireable: Central to all staff. Highest priority is Visitor / Vendor lobby. Access to various-sized conference rooms.

Special needs

Large training room.

Future conditions

None.

Personnel & Spaces	Key	#Staff	#Spaces	NSF	TNSF	TNSM	Comments
Human Resources Specialist	CO-3	1	1	120	120	11.1	
Secretary	WS-3			64	0	0.0	share w/ Accounting
Copy / Files / Mail	CFM		1	120	120	11.1	
Conference Room	CR-1		1	300	300	27.9	
Staff		1					
Direct Net Square Feet					540	50.1	
Intradepartmental Circulation					216	20.1	
Total Departmental Net Area					756	70.2	
Efficiency					70%		
Total Departmental Gross Area					1,080	100.3	

5. Space Requirements

Division Administrative Offices

Department Technical Services

Function

To provide technical support for operations areas such as maintenance, engineering, environmental, and validation.

Relationship criteria

Central to Operations departments.

Special needs

The facilities support functions included herein are permanent positions that will remain effective after facility start-up. At the time of facility start-up, the need for engineers, maintenance, validation, etc., will be much greater than that specified. It is assumed that these temporary personnel needs will be contracted out.

Future conditions

None.

Personnel & Spaces	Key	#Staff	#Spaces	NSF	TNSF	TNSM	Comments
Manager, Technical Services	CO-3	1	1	120	120	11.1	
Engineering Supervisor	CO-3	1	1	120	120	11.1	
Engineer - Batching Operations	WS-1	1	1	100	100	9.3	
Package Devel.Professional	WS-1	1	1	100	100	9.3	
Facilities Engineer	WS-1	1	1	100	100	9.3	
Resident Engineer	WS-1	1	1	100	100	9.3	OPV fill & DTP pkg'g & fill
Validation Supervisor	WS-1	1	1	100	100	9.3	
Validation Specialist	WS-3	3	3	64	192	17.8	
Secretary	WS-3	2	2	64	128	11.9	
Copy / Files / Mail	CFM		1	120	120	11.1	
Lunchroom / Training Center			1	200	200	18.6	
Vending / Coffee (Tea?) Counter			1	300	300	27.9	
Audio / Visual Storage			1	300	300	27.9	
First Aid Room			1	100	100	9.3	
Staff		12					
Direct Net Square Feet					2,080	193.2	
Intradepartmental Circulation					512	47.6	
Total Departmental Net Area					2,592	240.8	
Efficiency					70%		
Total Departmental Gross Area					3,703	344.0	

5. Space Requirements

Division Administrative Offices

Department Purchasing

Function

Responsible for all component and equipment purchases, establishing vendor agreements.

Relationship criteria

Essential: adjacency to Accounting Department.
Desireable: central to all general and administrative personnel.

Special needs

Interview room for vendors. (shared with Accounting)

Future conditions

None.

Personnel & Spaces	Key	#Staff	#Spaces	NSF	TNSF	TNSM	Comments
Purchasing Manager	CO-3	1	1	120	120	11.1	
Buyer	WS-1	1	1	100	100	9.3	
Secretary	WS-3			64	0	0.0	Share w/ Mat'ls Mgt.
Copy / Files / Mail	CFM			120	0	0.0	
Receptionist	WS-1	1	1	100	100	9.3	
Lobby & Reception			1	500	500	46.4	
Staff		3					
Direct Net Square Feet					820	76.1	
Intradepartmental Circulation					128	11.9	
Total Departmental Net Area					948	88.0	
Efficiency					70%		
Total Departmental Gross Area					1,354	125.8	

5. Space Requirements

Division Administrative Offices

Department Marketing & Business Development

Function

To provide marketing services such as sales and product management, education, market research and business development.

Relationship criteria

Essential: adjacent to executive and administrative offices.
Desireable: proximate to lobby and conference areas.

Special needs

Access to syndicated networking system (U.S.)

Future conditions

None.

Personnel & Spaces	Key	#Staff	#Spaces	NSF	TNSF	TNSM	Comments
Director of Marketing	CO-2	1	1	150	150	13.9	Sales & Product Mgt.
Sales Manager	CO-3	1	1	120	120	11.1	
Product Manager	CO-3	1	1	120	120	11.1	
Trainer	CO-3	1	1	120	120	11.1	
Secretary	WS-3	1	1	64	64	5.9	
Market Research Analyst	WS-1	1	1	100	100	9.3	
Conference Room	CR-4		1	500	500	46.4	
Copy / Files / Mail	CFM		1	120	120	11.1	
Staff		6					
Direct Net Square Feet					1,294	119.9	
Intradepartmental Circulation					518	48.1	
Total Departmental Net Area					1,812	168.0	
Efficiency					70%		
Total Departmental Gross Area					2,588	240.4	

5. Space Requirements

Division Administrative Offices

Department Materials Management

Function

Oversee activities of production planning, scheduling and distribution; manage inventories of all intermediates and final product; liaison with US for receipt of all intermediates and coordinate all product distribution activities.

Relationship criteria

Essential: adjacency to Regulatory and QC Administration.

Special needs

None.

Future conditions

None.

Personnel & Spaces	Key	#Staff	#Spaces	NSF	TNSF	TNSM	Comments
Manager, Resource Planning	CO-3	1	1	120	120	11.1	
Distribution Planner	WS-1	1	1	100	100	9.3	
Production Planner	WS-1	1	1	100	100	9.3	
Secretary	WS-3			64	0	0.0	Share w/ Purchasing
Staff		3					
Direct Net Square Feet					320	29.7	
Intradepartmental Circulation					128	11.9	
Total Departmental Net Area					448	41.6	
Efficiency					70%		
Total Departmental Gross Area					640	59.5	

5. Space Requirements

Division Administrative Offices

Department Management Information Services

Function

To provide all information services to facility including network and pc support, small application development and wide area networking.

Relationship criteria

None.

Special needs

Each desk is assumed to have a personal compute on it. (assume 75 desks)
Marketing needs access to syndicated marketing system.
Facility should have local communication closets for fiber optic links.

Future conditions

Video conferencing to be added to one of the large conference rooms.

Risk Assessment

Consideration is being given to Russian language and systems availability and potential links to U.S. operations. There are also concerns about the ability to import U.S. equipment into Russia. Configuration will be developed for the U.S. Lederle International Info Svcs. will examine Russian technology.

Personnel & Spaces	Key	#Staff	#Spaces	NSF	TNSF	TNSM	Comments
Manager	CO-3	1	1	120	120	11.1	
Computer Support Specialist	WS-1	1	1	100	100	9.3	Poss. temp or future supt
Computer Room / Telep. Swtchg			1	400	400	37.2	
Staging			1	200	200	18.6	
Library			1	120	120	11.1	
Staff		2					
Direct Net Square Feet					940	87.3	
Intradepartmental Circulation					88	8.2	
Total Departmental Net Area					1,028	95.5	
Efficiency					70%		
Total Departmental Gross Area					1,469	136.5	

5. Space Requirements

Division Manufacturing

Department DTP Bulk Batching

Function

To combine dipththeria, tetanus and pertussis concentrate with a medium and with saline to produce a final bulk.

Relationship criteria

Must be separated from OPV batching and fill areas.

Special needs

Separate HVAC system.

Future conditions

None.

Personnel & Spaces	Key	#Staff	#Spaces	NSF	TNSF	TNSM	Comments
Department Head	CO-3	1	1	120	120	11.1	
Supervisor	WS-1	2	2	100	200	18.6	
Operator	WS-2	4	4	36	144	13.4	
Chill Room #1			1	400	400	37.2	Concnts/Comb Compnts
Air Lock (people)	AL-1		1	168	168	15.6	
Air Lock (equipment)	AL-2		1	72	72	6.7	
Process Room			1	1,000	1,000	92.9	Cl. 100 inside Cl. 10,000
Chill Room #2			1	750	750	69.7	
Walk-in Incubator			1	150	150	13.9	
Staging / Storage			1	500	500	46.4	36 bottles, 5 carts
Component Mixing Room			1	100	100	9.3	Mix Pert/Shaking/Downld
DTP Conference Room	CR-1		1	300	300	27.9	share Bulk, Fill, Pack
DTP Lockers/Showers			2	600	1,200	111.5	share Bulk, Fill, Pack
DTP Breakroom			1	500	500	46.4	share Bulk, Fill, Pack
Staff		7					
Direct Net Square Feet					5,604	520.6	
Intradepartmental Circulation					506	47.0	
Total Departmental Net Area					6,110	567.6	
Efficiency					50%		
Total Departmental Gross Area					12,220	1,135.2	

5. Space Requirements

Division Manufacturing

Department DTP Fill

Function

To take DTP bulk and fill into sterilized vials.

Relationship criteria

Essential: adjacent to DTP packaging.
Desireable: proximate to DTP bulk and inspection.

Special needs

Cannot share lockers or other facilities with OPV staff.

Future conditions

Consider an automated inspection station.

Personnel & Spaces	Key	#Staff	#Spaces	NSF	TNSF	TNSM	Comments
Department Head	CO-3			120	0	0.0	share w/ OPV fill
Supervisor	WS-1	1	1	100	100	9.3	
Laborers (fill)		9					
Laborers (Component Prep)		1					
Inspectors		2					
Air Lock (people)	AL-1		2	168	336	31.2	1 @ Vial Prep, 1 @ Fill
Air Lock (equipment)	AL-2		2	72	144	13.4	
Chill Room #3			1	400	400	37.2	4 Drums
Stopper Proc. & Parts Prep			1	300	300	27.9	Laminar Flow Hood
Vial Prep / Staging			1	1,200	1,200	111.5	Wash, Depyrogenate
Capping Room			1	300	300	27.9	
Fill Line			1	1,000	1,000	92.9	Install, Accum, Fill, Stop
Inspection			1	250	250	23.2	
Staff		13					
Direct Net Square Feet					4,030	374.5	
Intradepartmental Circulation					40	3.7	
Total Departmental Net Area					4,070	378.2	
Efficiency					50%		
Total Departmental Gross Area					8,140	756.2	

5. Space Requirements

Division Manufacturing

Department DTP Packaging

Function

To take filled DTP vials, print expiration date and batch number on label, put label on vials, fold and insert literature, put vials into boxes with inserts, and put boxes into cartons.

Relationship criteria

Essential: adjacent to DTP fill line.
Desireable: easy access to warehouse and supply storage.

Special needs

Compressed air for automated packaging requirements.

Future conditions

None.

Personnel & Spaces	Key	#Staff	#Spaces	NSF	TNSF	TNSM	Comments
Supervisor	WS-1	1	1	100	100	9.3	
Operators		5					
Supplier		1					
Mechanic		1					
Packaging			1	1,800	1,800	167.2	Accum/Label/Load/Bundl
Staging			1	300	300	27.9	Components/Vials
Staff		8					
Direct Net Square Feet					2,200	204.4	
Intradepartmental Circulation					40	3.7	
Total Departmental Net Area					2,240	208.1	
Efficiency					50%		
Total Departmental Gross Area					4,480	416.2	

5. Space Requirements

Division Manufacturing

Department OPV Bulk Batching

Function

To manufacture diluent. To break down virus monopools into aliquots. To combine virus aliquots and diluent to produce final bulk.

Relationship criteria

Essential: isolation from DTP so it is not possible for staff to move between OPV and DTP.

Special needs

OPV facility must be dedicated. Media prep and glassware support areas may be shared.

Future conditions

May consider load cells.

Personnel & Spaces	Key	#Staff	#Spaces	NSF	TNSF	TNSM	Comments
Department Head	CO-3	1	1	120	120	11.1	
Supervisor / Team Leader	WS-1	2	2	100	200	18.6	
Technicians (weekly)	WS-2	1	1	36	36	3.3	
Laborers (hourly)		2					
OPV Conference Room	CR-1		1	300	300	27.9	share Batch, Fill, Pack
OPV Lockers / Showers			2	600	1,200	111.5	share Batch, Fill, Pack
Chill Room #7			1	200	200	18.6	Complete diluent
Freezer #1			1	750	750	69.7	Monopools / Bulk store
Batching Room			1	875	875	81.3	Cl. 100 inside Cl. 10,000
Air Lock (equipment)	AL-2		1	72	72	6.7	
Air Lock (people)	AL-1		1	168	168	15.6	
Storage / Staging			1	945	945	87.8	
Water Bath			1	100	100	9.3	
Autoclave			1	100	100	9.3	24" X 36" X 60"
Decontamination (dirty)			1	224	224	20.8	
Aseptic Prep (clean)			1	420	420	39.0	
OPV Breakroom			1	500	500	46.4	Share Batch, Fill, Pack
Staff		6					
Direct Net Square Feet					6,210	576.9	
Intradepartmental Circulation					262	24.4	
Total Departmental Net Area					6,472	601.3	
Efficiency					50%		
Total Departmental Gross Area					12,945	1,202.5	

5. Space Requirements

Division Manufacturing

Department OPV Fill

Function

To take OPV bulk, fill into dispettes, inspect and freeze.

Relationship criteria

Essential: immediately adjacent to packaging.
Desireable: proximate to OPV bulking.

Special needs

Will include two fill machines. HVAC must be separate from DTP areas.

Future conditions

May consider form, fill, seal technology.
Consider OPV vial filling.

Personnel & Spaces	Key	#Staff	#Spaces	NSF	TNSF	TNSM	Comments
Department Head	CO-3	1	1	120	120	11.1	Share w/ packaging
Supervisor	WS-1	1	1	100	100	9.3	
Operators		11					
Supply Staging			1	500	500	46.4	
Freezer #2			1	400	400	37.2	Rel. Bulk/Unrel. Dispettes
Air Lock (Equipment)	AL-2		1	72	72	6.7	
Air Lock (people)	AL-1		1	168	168	15.6	
Drum Roller Room			1	100	100	9.3	
Inspection			1	350	350	32.5	Leak Test/Visual/Pails
Dose Check			1	100	100	9.3	Class 10,000
Fill Room			1	400	400	37.2	Class 100 inside 1,000
Staff		13					
Direct Net Square Feet					2,310	214.6	
Intradepartmental Circulation					88	8.2	
Total Departmental Net Area					2,398	222.8	
Efficiency					50%		
Total Departmental Gross Area					4,796	445.5	

5. Space Requirements

Division Manufacturing

Department OPV Packaging

Function

To take filled dispettes, put into trays with circulars, put trays into boxes, and boxes into cartons.

Relationship criteria

Essential: immediately adjacent to the OPV fill line.
Desireable: close access to the warehouse.

Special needs

Must be segregated from DTP.

Future conditions

Packing process changes if filling process changes. (e.g., vials)

Personnel & Spaces	Key	#Staff	#Spaces	NSF	TNSF	TNSM	Comments
Supervisor	WS-1	1	1	100	100	9.3	
Laborers		14					
Air Lock (people)	AL-1		1	168	168	15.6	
Air Lock (equipment)	AL-2		1	72	72	6.7	
Packaging Room			1	1,500	1,500	139.3	Check. Thaw, Pack, Etc.
Thaw Room			1	250	250	23.2	
Supply Staging			1	300	300	27.9	Incoming materials
Freezer #4			1	200	200	18.6	Rel Disp / Unrel cartons
Spare Parts			1	100	100	9.3	
Staff		15					
Direct Net Square Feet					2,690	249.9	
Intradepartmental Circulation					40	3.7	
Total Departmental Net Area					2,730	253.6	
Efficiency					50%		
Total Departmental Gross Area					5,460	507.2	

5. Space Requirements

Division Manufacturing

Department Media Prep

Function

To produce media in two sets of rooms: (1) media requiring sterile filtering in a Class 100 environment; (2) media requiring autoclaving.

Relationship criteria

Essential: adjacent to glassware and glassware storage, easy access to OPV batch and DTP bulking areas.
Desireable: assume that the conference, break and restrooms will also be shared by the warehouse personnel.

Special needs

Autoclave needs clean and dirty sides. Requires low humidity control.

Future conditions

None.

Personnel & Spaces	Key	#Staff	#Spaces	NSF	TNSF	TNSM	Comments
Media Supervisor	WS-1	1	1	100	100	9.3	
Technical Assistant	WS-2	6		36	0	0.0	
Air Lock (people)	AL-1		1	168	168	15.6	
Air Lock (equipment)	AL-2		1	72	72	6.7	
QC Media Area			1	250	250	23.2	Ktl-40L,Separate Exhaust
Media Prep			1	1,000	1,000	92.9	Kettles, classified area
Aseptic Filtration			1	96	96	8.9	Class 100, 8'X12'
Unrel/Rel Raw Mat'l Storage			1	800	800	74.3	Temp. & Humid. control
Outgoing Unrel. Media Storage			1	500	500	46.4	Filter-sterilized 48 bottles
Autoclave Support Room			1	300	300	27.9	Autoclaves - 1 lge, 1 sml
Distillation/WFI			1	400	400	37.2	Storage Tank - 1200 L.
Weigh Room			1	160	160	14.9	Next to Aseptic Filtration
Conference Room	CO-2		1	150	150	13.9	share by all Support Funct
Breakroom			1	300	300	27.9	share by all Support Funct
Lockers / Showers			2	600	1,200	111.5	share by all Support Funct
Staff		7					
Direct Net Square Feet					5,496	510.6	
Intradepartmental Circulation					100	9.3	
Total Departmental Net Area					5,596	519.9	
Efficiency					50%		
Total Departmental Gross Area					11,192	1,039.7	

5. Space Requirements

Division Manufacturing

Department Glassware

Function

To clean, wrap and sterilize glassware, drums and other equipment used in OPV or DTP areas.

Relationship criteria

Essential: adjacent to OPV batch, DTP bulk, and to fill areas.
Desireable: convenient to central receiving and to warehouse (storage) areas.

Special needs

Requires a separate clean and a dirty side.

Future conditions

None.

Personnel & Spaces	Key	#Staff	#Spaces	NSF	TNSF	TNSM	Comments
Supervisor	WS-1	1	1	100	100	9.3	
Laborers (hourly)		6					
Aseptic Prep (clean)			1	2,200	2,200	204.4	
Decontamination (dirty)			1	650	650	60.4	
Staging			1	150	150	13.9	
Machine Room			1	500	500	46.4	WFI
Autoclave			1	300	300	27.9	
Drying Room			1	500	500	46.4	Drums & glassware
Glassware Storage			1	1,200	1,200	111.5	
Filter Integrity Test Lab			1	350	350	32.5	Fume hood
Staff		7					
Direct Net Square Feet					5,950	552.7	
Intradepartmental Circulation					40	3.7	
Total Departmental Net Area					5,990	556.4	
Efficiency					50%		
Total Departmental Gross Area					11,980	1,112.9	

5. Space Requirements

Division Quality Control

Department QA / QC Administration

Function

To perform quality audits, review batch records, and release product.

Relationship criteria

Essential: adjacent to QC labs and vivarium. Staff will use central cafeteria and Administrative Office restrooms.

Special needs

None.

Future conditions

None.

Personnel & Spaces	Key	#Staff	#Spaces	NSF	TNSF	TNSM	Comments
Director	CO-2	1	1	150	150	13.9	
QAS Supervisor	CO-3	1	1	120	120	11.1	
Veterinarian	CO-3	1	1	120	120	11.1	
QA Specialist	WS-1	2	2	100	200	18.6	
QAS Docum./Stability	WS-1	1	1	100	100	9.3	
Mfg Support Professional	WS-1	1	1	100	100	9.3	
Compliance & Pkg Component	WS-1	1	1	100	100	9.3	
Clerks	WS-2	2	2	36	72	6.7	
Document Storage			1	330	330	30.7	
Copy / Files / Mail	CFM		2	120	240	22.3	
Conference Room	CR-2		1	250	250	23.2	
Staff		10					
Direct Net Square Feet					1,782	165.5	
Intradepartmental Circulation					581	54.0	
Total Departmental Net Area					2,363	219.5	
Efficiency					70%		
Total Departmental Gross Area					3,375	313.6	

5. Space Requirements

Division Quality Control

Department Testing Laboratories

Function

See individual laboratory technical data sheets for detail.

Relationship criteria

Essential: retention stability must be adjacent to QA offices and test labs.

Special needs

None.

Future conditions

None.

Personnel & Spaces	Key	#Staff	#Spaces	NSF	TNSF	TNSM	Comments
Biology Supervisor	CO-3	1		120	0	0.0	In lab
Viral Supervisor	CO-3	0		120	0	0.0	Share w/Microbiology
Chemical/Biochem Supervisor	CO-3	1		120	0	0.0	In lab
Microbiology Lab Supervisor	CO-3	1		120	0	0.0	In lab
Technicians/Scientists	WS-2	19		36	0	0.0	In lab
Biological Lab	LM-1		4	330	1,320	122.6	Biosafety cab'ts, Chill Rm
Chemical / Biochem Lab	LM-1		3	330	990	92.0	2 modls. chem / 1 analysis
Virology Lab	LM-1		3	330	990	92.0	Biosafety cab'ts
Microbiology Lab	LM-1		7	330	2,310	214.6	Biosafety cab'ts
Retention / Stability Storage	LM-1		2	330	660	61.3	Incubator, Chill Room
Lab Storage			1	860	860	79.9	
Conference Room / Training	CR-2		1	250	250	23.2	
Glass Storage			1	220	220	20.4	
Decontamination			1	110	110	10.2	Adjacent to corridor
Showers/Lockers			2	300	600	55.7	
Breakroom			1	300	300	27.9	
General Storage			1	480	480	44.6	
Solvents Storage			1	110	110	10.2	
Staff		22					
Direct Net Square Feet					9,200	854.6	
Intradepartmental Circulation					100	9.3	
Total Departmental Net Area					9,300	863.9	
Efficiency					55%		
Total Departmental Gross Area					16,909	1,570.7	

5. Space Requirements

Division Quality Control

Department Vivarium

Function

To produce non-stressed mice and guinea pigs that meet weight and age requirements necessary for product testing.

Relationship criteria

Should be separated from QC Testing Labs.

Special needs

Requires isolation between breeding rooms.

Future conditions

None.

Personnel & Spaces	Key	#Staff	#Spaces	NSF	TNSF	TNSM	Comments
Supervisor	CO-3	1	1	120	120	11.1	
Breeding Technicians	WS-2	4		36	0	0.0	7 days/week
Testing Technicians	WS-2	4		36	0	0.0	7 days/week
Utility Workers	WS-2	2		36	0	0.0	
Lockers / Restrooms			2	300	600	55.7	
Breakroom			2	150	300	27.9	
Housekeeping			2	150	300	27.9	Testing / Breeding
Procedure Laboratory	AN-2		2	330	660	61.3	
Mouse - Safety / Toxicity Test	AN-1		1	330	330	30.7	
GP - Safety / Potency Test	AN-1		2	330	660	61.3	
Mouse - Potency Test	AN-1		1	330	330	30.7	Pertussis & Tetanus
GP - Breeding	AN-1		2	330	660	61.3	Barrier Suite (Isolators)
Colony Holding Rooms	AN-1		2	330	660	61.3	Barrier Suite (Conv'bl Cgs)
Records Storage	CFM		1	120	120	11.1	
Mouse Rec'g / Holding	AN-1		1	330	330	30.7	Barrier Suite
GP Rec'g / Holding	AN-1		1	330	330	30.7	Barrier Suite
Mouse-Breeding	AN-1		2	330	660	61.3	Barrier Suite (Isolators)
Staff		11					
Direct Net Square Feet					6,060	563.0	
Intradepartmental Circulation					96	8.9	
Total Departmental Net Area					6,156	571.9	
Efficiency					55%		
Total Departmental Gross Area					11,193	1,039.7	

5. Space Requirements

Division Quality Control

Department Vivarium Support

Function

To support the activities of the vivarium in a sanitary and efficient manner.

Relationship criteria

Should be adjacent to the vivarium and have a rear or "back door" type of shipping access.

Special needs

None.

Future conditions

None.

Personnel & Spaces	Key	#Staff	#Spaces	NSF	TNSF	TNSM	Comments
Feed and Bedding Storage			1	960	960	89.2	
Cage Repair and Storage			1	360	360	33.4	
Soiled Staging			1	510	510	47.4	
Housekeeping Equipmt Storage			1	340	340	31.6	
Cage Cleaning			1	1,020	1,020	94.8	
Clean Cage Storage			1	612	612	56.9	
Mechanical Equipment			1	884	884	82.1	
Supplies Receiving Area			1	600	600	55.7	
Dumpster			1	500	500	46.4	
Cold Storage			1	200	200	18.6	
Garment Exchange			1	200	200	18.6	
Lockers / Showers / Restrooms			2	150	300	27.9	Utility Workers
Staff							
Direct Net Square Feet					6,486	602.6	
Intradepartmental Circulation					0	0.0	
Total Departmental Net Area					6,486	602.6	
Efficiency					55%		
Total Departmental Gross Area					11,793	1,095.5	

5. Space Requirements

Division Support

Department Office Communications

Function

Responsible for routing of all mail (both interoffice and outside plant); responsible for all telephone systems.

Relationship criteria

Desireable: central location.

Special needs

None.

Future conditions

Video conferencing.

Personnel & Spaces	Key	#Staff	#Spaces	NSF	TNSF	TNSM	Comments
Communications Coordinator	CO-3	1	1	120	120	11.1	
Staff		1					
Direct Net Square Feet					120	11.1	
Intradepartmental Circulation					48	4.5	
Total Departmental Net Area					168	15.6	
Efficiency					70%		
Total Departmental Gross Area					240	22.3	

5. Space Requirements

Division Support

Department Maintenance

Function

To provide plant-wide utilities,ie. electricity, chilled water, compressed air, etc. A maintenance supervisor and four technicians (instrumentation, electrician, machinist/welder, machinist/plumber, carpenter/painter) responsible for ongoing equipment and utility maintenance and for installation and removal of equipment.

Relationship criteria

Central to operations activities.

Special needs

None.

Future conditions

None.

Personnel & Spaces	Key	#Staff	#Spaces	NSF	TNSF	TNSM	Comments
Facilities Maintenance	WS-1	1	1	100	100	9.3	
Maintenance Technician	WS-2	4	4	36	144	13.4	
Garage / Equipment Storage			1	1,300	1,300	120.8	
Table and Chair Storage			1	200	200	18.6	
Shop			1	1,000	1,000	92.9	
Staff		5					
Direct Net Square Feet					2,744	255.0	
Intradepartmental Circulation					98	9.1	
Total Departmental Net Area					2,842	264.1	
Efficiency					50%		
Total Departmental Gross Area					5,683	527.9	

5. Space Requirements

Division Support

Department Security

Function

To guard delivery and shipping access twenty-four hours per day.

Relationship criteria

Locate at delivery access.

Special needs

Assume a three shift operation, seven days per week.

Future conditions

Need to be reviewed when facility design is complete. Possible reliance on sophisticated alarm system when plant is shut down is contemplated.

Personnel & Spaces	Key	#Staff	#Spaces	NSF	TNSF	TNSM	Comments
Security Officer	WS-2	6	2	36	72	6.7	
Copy / Files / Mail	CFM		1	120	120	11.1	
Staff		6					
Direct Net Square Feet					192	17.8	
Intradepartmental Circulation					77	7.1	
Total Departmental Net Area					269	24.9	
Efficiency					70%		
Total Departmental Gross Area					384	35.7	

5. Space Requirements

Division Support

Department Shipping & Receiving Warehouse

Function

To provide incoming shipping and outgoing shipping capabilities for the batch/bulk, fill and pack operations as well as storage of supplies and components, and freezer or chill room storage for some of the incoming, outgoing or work-in-process product. To provide final packaging for outgoing product. To provide mail processing.

Relationship criteria

Should provide clear access to Batch/bulk, fill or package areas that the warehouse serves. Should have a "back door" access for the site.

Special needs

Needs a clearly distinct incoming versus outgoing circulation pattern.

Future conditions

May need to support potential future production facilities also.

Personnel & Spaces	Key	#Staff	#Spaces	NSF	TNSF	TNSM	Comments
Supervisor	WS-1	3	3	100	300	27.9	
Laborer	WS-2	6	6	36	216	20.1	
Mail Processor	WS-3	1	1	64	64	5.9	
Restrooms / Lockers			2	300	600	55.7	
Shipping / Receiving Docks			1	1,220	1,220	113.3	
Label / Sample Inspection			1	304	304	28.2	
Freezer #3			1	750	750	69.7	Dispette storage
Freezer #5			1	500	500	46.4	OPV Unrel. Final Product
Freezer #6			1	750	750	69.7	OPV Rel. Final Product
Incoming materials Warehouse			1	15,000	15,000	1393.4	
Waste handling/Temp Storage			1	300	300	27.9	
Incoming / Outgoing Staging			1	3,000	3,000	278.7	
Mailroom			1	500	500	46.4	
Equipment Room			1	400	400	37.2	
Chill Room #4			1	500	500	46.4	DTP Unlabeled Vials
Chill Room #5			1	500	500	46.4	DTP Unrel. Finished
Chill Room #6			1	750	750	69.7	DTP Rel. Finished
Pack Containers			1	500	500	46.4	
Staff		1[illegible]					
Direct Net Square Feet / meters					26,154	2429.4	
Intradepartmental Circulation					232	21.6	
Total Departmental Net Area					26,386	2451.0	
Efficiency					70%		
Total Departmental Gross Area					37,694	3,501.6	

5. Space Requirements

Division Support

Department Lab Services

Function

Responsible for cleaning the facility.

Relationship criteria

None.

Special needs

None.

Future conditions

None.

Personnel & Spaces	Key	#Staff	#Spaces	NSF	TNSF	TNSM	Comments
Supervisor	WS-1	1	1	100	100	9.3	
Operators		10					
Janitor's Closet			1	150	150	13.9	Supplies & Equipment
Staff		11					
Direct Net Square Feet					250	23.2	
Intradepartmental Circulation					40	3.7	
Total Departmental Net Area					290	26.9	
Efficiency					70%		
Total Departmental Gross Area					414	38.5	

6

5. Space Requirements

Division Utility Plant

Department Central Utility Plant

Function

Housing for utilities (Free Standing). One story building with 2,300 square feet on mezzanine. 24 feet to bottom of structure, 27 to 30 feet overall.

Relationship criteria

None.

Special needs

Exterior Cooling Tower sump: 34 x 34 x 10 feet.
Exterior pad for towers: 96 x 24 x 6 feet.

Future conditions

None.

Personnel & Spaces	Key	#Staff	#Spaces	NSF	TNSF	TNSM	Comments
Electrical			1	3,400	3,400	315.8	
Boilers & Chillers			1	9,600	9,600	891.8	
Water Trtmt & Air Compressors			1	1,600	1,600	148.6	
Shop/Parts Storage			1	2,100	2,100	195.1	Pos. Incorp w/other Maint
Control Room			1	300	300	27.9	
Break Room			1	630	630	58.5	
Lockers			2	500	1,000	92.9	
Supervisors	CO-3	4	1	120	120	11.1	1 per Shift
Boiler Room Personnel	WS-2	6	1	36	36	3.3	
Tradesman	WS-2	3	3	36	108	10.0	Air Handler / Electrician
Staff		13					
Direct Net Square Feet					18,894	1755.0	
Intradepartmental Circulation					106	9.8	
Total Departmental Net Area					19,000	1764.8	
Efficiency					100%		
Total Departmental Gross Area					19,000	1,764.9	

6. Program Key

Key	Description	SQ. FT.	Comments
CO-1	Director	200	Closed Office*
CO-2	Director	150	Closed Office*
CO-3	Manager	120	Closed Office*
WS-1	Supervisor/Professional	100	Office*
WS-2	Res. Assoc., Lab Tech.	36	Open Office*
WS-3	Administrative Assistant	64	Open Office Clerical*
CFM	Copy / Files / Mail	120	Closed *
CR-1	Large Conference Room	300	Closed, Private*
CR-2	Medium Conference Room	250	Closed, Private*
CR-3	Small Conference Room	150	Closed, Private*
CR-4	Assembly (20 People)	500	Closed, Private*
LM-1	Lab Module & Support	330	Laboratory Space
Other	Department Specific		Varies
AN-1	Animal Room	330	Animal Care or Holding Room
AN-2	Animal Support		Varies
AL-1	Air Lock - People	168	Two Rooms In, One Room Out
AL-2	Air Lock - Equipment	72	One Room (wipe down)

* Intradepartmental circulation. For each office-type function, a 40% interdepartmental circulation factor is added in the space requirements summary for each department.

48

D. Equipment and Component Requirements

1. Introduction

The design of a production facility is dependent upon the sizing and placement of the production equipment. The cost of the facility is dependent upon the equipment selected for use in the facility since it can be as much or more than the general construction cost of the facility.

The equipment identified for this study was selected on the basis of accommodating currently approved processes (as required by previously stated timing objectives). It is generally off-the-shelf hardware that can meet timing, cost, and maintainability requirements.

The equipment requirements identified in this section were compiled through a joint effort of the LPB Facilities Department equipment specialists and engineers and Flad/AEI equipment specialists. This input was compiled and summarized by department.

It was necessary to identify packaging components in order to derive the operating costs for the facility. The packaging component list in this section was compiled by LPB.

The Freezer, Chillroom and Incubator Summary was extracted from the space requirements provided in Section IV.C.5.

These summaries were used in space and utility requirements and in costing portions of this study.

59

2. Equipment Summary

Manufacturing	Total Cost
OPV Bulk Production	1,662,000
OPV Fill & Pack	2,885,000
Glassware Preparation	1,630,000
DTP Bulk Production	621,000
DTP Filling	3,862,000
DTP Packaging	820,000
Media Production	1,303,900
Sub-Total	**12,783,900**
Quality Control	
Microbiology Laboratory	603,100
Viral Testing Laboratory	31,100
Biology Testing Laboratory	26,600
Chemical Testing Laboratory	51,900
Support	602,400
Vivarium	700,400
Vivarium Support	307,000
Sub-Total	**2,322,500**
Central Utility Plant	**97,700**
Grand Total	**15,204,100**

90

Manufacturing - OPV Bulk Batching

Equipment	Equipment Cost	Equip. + Deliv./ Installation	No. of Units	Total Cost	Room Name	Manufacturer
Steam Sterilizer 36x48x84	200,000	500,000	1	500,000	Kitchen	AMSCO
Batching Tanks 800L	25,000	150,000	2	300,000	Batching	Precision Stainless
Mixer. Agitator	10,000	12,000	2	24,000	Batching	Chemap
Laminar Flow Hood 16'x12'	180,000	400,000	1	400,000	Batching	Flanders
Stainless Steel Drum - 100L	1,100	1,500	10	15,000	Storage	Mueller (M/O IND.)
Stainless Steel Drum - 200L	1,600	2,000	16	32,000	Storage	Mueller (M/O IND.)
Stainless Steel Drums - 100L	6,000	6,000	60	360,000	Storage	Precision Stainless
Misc				31,000		
Total Cost				1,662,000		

Manufacturing - OPV Fill & Pack

Equipment	Equipment Cost	Equip. + Deliv./ Installation	No. of Units	Total Cost	Room Name	Manufacturer
Dispette Filler		370,000	2	740,000	Fill	Custom built
Steam Sterilizer 36x42x84	200,000	500,000	1	500,000	Fill	AMSCO
Vaccum Chamber	61,500	65,000	1	65,000	Inspection	Cooke
Thermoformer		430,000	1	430,000	Packaging	Klockner
Pick & Place		985,000	1	985,000	Packaging	Custom built
Balance Table		6,000	2	12,000	Inspec/Pkg	Hamilton
Conveyors		12,000	4	48,000	Inpec/Pkg	Leeds Conv.
Drum Roller		15,000	1	15,000	Inspection	
Spare Parts		15,000	1	15,000	Inspection	
Chill box		12,000	1	12,000	Fill	Custom built
S.S. Drums				30,000		Mueller
Misc				33,000		
Total Cost				2,885,000		

Manufacturing - DTP Bulk Production

Equipment	Equipment Cost	Equip. + Deliv./ Installation	No. of Units	Total Cost	Room Name	Manufacturer
Fixed Floor Scale	20,000	22,000	1	22,000		Toledo
Movable Fl. Scale	20,000	22,000	1	22,000		Mettler
Stainless Steel Tanks 1000L	35,000	150,000	2	300,000		Precision Stainless
Filter Integrity Facility	50,000	100,000	1	100,000	Integrity Room	Duralab
MIxer/Agitator	10,000	12,000	2	24,000		Chemap
Bottle Shaker	8,000	10,000	3	30,000		New Brunswick
Drum Tumbler	12,000	14,000	1	14,000		U.S. Stoneware
S.S. Drums - 200L	1,600	2,000	40	80,000		Mueller (M/O In
Misc				29,000		
Total Cost				621,000		

Manufacturing - DTP Filling

Equipment	Equipment Cost	Equip. + Deliv./ Installation	No. of Units	Total Cost	Room Name	Manufacturer
Vial Washer	300,000	500,000	1	500,000	Vial Prep	Cozzoli
Depyro. Tunnel	500,000	700,000	1	700,000	Vail Prep	Bosch
Vial Filler-8 head	300,000	500,000	1	500,000	Filling	T.L.
Vial Sealer	150,000	200,000	1	200,000	Capping	West
Ink Jet Printer	25,000	30,000	1	30,000	Capping	Video-Jet
Stopper Washer	37,000	50,000	1	50,000	Parts Prep	Capsulot
Autoclave 36x24x84 chmbr	200,000	400,000	1	400,000	Parts Prep	ICOS
Dry Heat Oven	300,000	400,000	1	400,000	Parts Prep	Gruenburg
Tray Loader	50,000	60,000	1	60,000	Capping	Adtech
Drum Tumbler	12,000	14,000	1	14,000		U.S. Stoneware
Port. Particle Mon.	5,000	6,000	1	6,000		-
Manual Insp. Statio	150	200	10	2,000		-
Misc				1,000,000		
Total Cost				3,862,000		

Manufacturing - DTP Packaging

Equipment	Equipment Cost	Equip. + Deliv./ Installation	No. of Units	Total Cost	Room Name	Manufacturer
Pressure Sensitive Labeller	85,000	100,000	1	100,000	Packaging	New Jersey Machine
Cartoner	370,000	450,000	1	450,000	Packaging	Legacy
Stretch Bander	70,000	70,000	1	70,000	Packaging	Rodico
Accum. Tables	15,000	70,000	2	140,000	Packaging	
Conveyors/Check Weigh Tables	25,000	30,000	2	60,000		
Total Cost				820,000		

Manufacturing - Media Production

Equipment	Equipment Cost	Equip. + Deliv./ Installation	No. of Units	Total Cost	Room Name	Manufacturer
Autoclave w/ 62x66x84 chmbr	300,000	500,000	1	500,000	Media Prod.	AMSCO
Autoclave w/ 36x42x84 chmbr	220,000	500,000	1	500,000	Media Prod.	AMSCO
Kettle 750-1000L	20,000	30,000	1	30,000	Media Prod.	Lee
Kettle 100-250L	12,000	20,000	2	40,000	Media Prod.	Lee
Kettle 40L	9,000	12,000	1	12,000	Media Prod.	Lee
Tank - 400L (OPV)	30,000	35,000	1	35,000	Media Prod	Precision S.S.
MIxer/Agitator (Propeller-type)	8,000	9,000	4	36,000	Media Prod.	Lightnin
Stainless Steel Drum - 200L	1,600	2,000	50	100,000	Media Prod.	Mueller (M/O IND.)
Bottles - 40L	200	250	50	12,500	Media Prod.	Precision Stainless
Portable pumps	10,000	12,000	2	24,000	Media Prod.	
Fume Hood	4,500	5,500	2	11,000	Media Prod.	
Misc				3,400		
Total Cost				1,303,900		

Manufacturing - Glassware Preparation

Equipment	Equipment Cost	Equip. + Deliv./ Installation	No. of Units	Total Cost	Room Name	Manufacturer
Glass Washer Chmbr 52x48x4	160,000	200,000	2	400,000	Glasswash	AMSCO
Drum Washer	75,000	230,000	1	230,000	Glasswash	Girton 794 AH
Drying Oven	17,000	40,000	1	40,000	Glasswash	Gruenburg
Pipette Washer	3,500	5,000	1	5,000	Glasswash	ASTRAMAX
Autoclave 62x66x84" chmbr	300,000	500,000	1	500,000	Glasswash	AMSCO
Filter Integrity Facility	50,000	100,000	1	100,000	Integrity Rm	Duralab
Laminar Flow Area 8x12	120,000	350,000	1	350,000	Glasswash	Flanders
Misc				5,000		
Total Cost				1,630,000		

Quality Control
Microbiology Laboratory

Equipment	Equipment Cost	Equip. + Deliv./ Installation	No. of Units	Total Cost	Room Name	Manufacturer
Analytical Balance	1,900	2,000	1	2,000	Media Prep	Mettler
Microscope	2,000	2,200	1	2,200	Media Prep	Stereostar
Benchtop Centrifuge	1,500	1,800	2	3,600	Media Prep	Beckman
Bio Safety Cabt. CL II Type A - 6'	6,000	7,000	2	14,000	Clean & Media Prep	Baker SterilGard
Autoclave 24x36x84	200,000	400,000	1	400,000	Media Prep	AMSCO
Incubator	2,000	2,400	2	4,800	Media Prep	New Brunswick
Work Stat. Isolator	93,000	100,000	1	100,000	Media Prep	La Calhene
S. S. Shelving		250	6	1,500	Media/Staging	Metro
VHP Fogger (port)	68,000	75,000	1	75,000	-	AMSCO
						VHP 1000
Total Cost				603,100		

Viral Testing Laboratory

Equipment	Equipment Cost	Equip. + Deliv./ Installation	No. of Units	Total Cost	Room Name	Manufacturer
Upright Freezer (-20 deg.C)	4,500	5,000	1	5,000		Kelvinator
Chest Freezer (-70 deg.C)	5,000	6,000	1	6,000		Harris
CO2 Incubator	2,000	2,200	1	2,200		Thermolyne
Bio Safety Cabt. CL II Type A - 4'	6,000	7,000	2	14,000		Baker SterilGard
UC Freezer LN2 Backup	1,500	1,700	1	1,700		Forma-Scientific
Lab Refrig.	2,000	2,200	1	2,200		Forma-Scientific
Total Cost				31,100		

Quality Control
Biology Testing Laboratory

Equipment	Equipment Cost	Equip. + Deliv./ Installation	No. of Units	Total Cost	Room Name	Manufacturer
Benchtop Lyophil.	5,600	7,000	1	7,000		Labconco
Autoclave (Benchtop)	5,200	5,600	1	5,600		Barnstead
Bio Safety Cabt. CL II Type A - 6'	6,000	7,000	2	14,000		Baker SterilGard
Total Cost				26,600		

Q C Support

Equipment	Equipment Cost	Equip. + Deliv./ Installation	No. of Units	Total Cost	Room Name	Manufacturer
Autoclave (single door)	290,000	600,000	1	600,000		AMSCO 3000 Series
Lab carts		1,200	2	2,400		Allentown
Total Cost				602,400		

Chemical Testing Laboratory

Equipment	Equipment Cost	Equip. + Deliv./ Installation	No. of Units	Total Cost	Room Name	Manufacturer
Chemical Hood CL II Type B2 - 6'	6,000	7,000	2	14,000		Baker BioChemGARD
Analytical Balance	1,900	2,000	1	2,000		Mettler
Balance Table		6000	1	6000		Hamilton
Reagent Storage	1,500	1,700	1	1,700		-
Refractometer	4,300	4,600	1	4,600		Abbe
Karl Fischer Titrator	1,700	2,000	1	2,000		Fisher Scient.
Drying Oven	2,100	2,300	1	2,300		
Muffle Furnace	1,200	1,700	1	1,700		Fisher Scient.
Spectrophotometer Infrared Absorption	1,300	1,500	1	1,500		
Spectrophotometer Atomic Absorption	1,300	1,500	1	1,500		
Spectrophotometer Absorption	1,300	1,500	1	1,500		
Mercury Lamp	120	150	1	150		
Chromatograph Gas	5,700	6,500	1	6,500		Cole-Parmer
Centrifuge	3,100	3,500	1	3,500		Fisher Scient.
Water Bath	600	900	1	900		
Steam Bath	800	1,100	1	1,100		
Hot Plate	150	200	1	200		
Aluminum Block	50	50	1	50		
S.S. Tubing	500	700	1	700		
Total Cost				51,900		

Quality Control - Vivarium

Equipment	Equipment Cost	Equip. + Deliv./ Installation	No. of Units	Total Cost	Room Name	Manufacturer
Guinea Pig cage rack & cages (20/rack)	11,450	12,000	24	288,000	Small Animal	Lab Products
Mice cage rack & cages (48/rack)	11,450	12,000	24	288,000	Small Animal	Lab Products
Bio Safety Cabinet CL II Type A - 4'	6,000	7,000	12	84,000	Small Animal	Baker SterilGard
Bio Safety Cabinet CL II Type A - 6'	6,000	7,000	2	14,000	Procedure Lab	Baker SterilGard
Lab Refrig.	2,000	2,200	2	4,400	Procedure Lab	Forma-Scientific
Exam Light (single arm)	8,000	8,500	2	17,000	Procedure Lab	AMSCO
Exam Table S. S. 30"x72"	2,000	2,500	2	5,000	Procedure Lab	Suburban Surgical
Misc.				0		
Total Cost				700,400		

Quality Control - Vivarium Support

Equipment	Equipment Cost	Equip. + Deliv./ Installation	No. of Units	Total Cost	Room Name	Manufacturer
Cage Washer (Racks 2'x6'x5'H)	200,000	300,000	1	300,000		Basil
Scissor Lift	6,000	7,000	1	7,000		-
Total				307,000		

Central Utility Plant

Equipment	Equipment Cost	Equip. + Deliv./ Installation	No. of Units	Total Cost	Room Name	Manufacturer
10" Lathe	3,600	4,500	1	4,500	Shop	-
Bridgeport	5,500	6,500	1	6,500	Shop	-
Drill Press	700	1,000	2	2,000	Shop	-
Paint Spray Hood	1,600	2,500	1	2,500	Shop	-
Height Gage	5,000	5,500	1	5,500	Shop	Precision Meas.
High Density Sto.	20,000	20,500	1	20,500	Shop	-
Ovhd Monorail/ Lift	5,000	9,000	1	9,000	Shop	-
Welding Booth	1,500	2,000	1	2,000	Shop	-
Man. Sheet Metal Equip.	15,000	17,000	1	17,000	Shop	-
Hydraulic Press	6,000	8,500	1	8,500	Shop	-
Sand Blstg block	1,000	1,200	1	1,200	Shop	-
Parts Washer	2,000	2,500	1	2,500	Shop	-
Hand tool Cabt.	500	550	10	5,500	Shop	-
Band Saw	2,000	2,500	1	2,500	Shop	-
Hack Saw	1,500	2,000	1	2,000	Shop	-
Grinder	2,500	3,000	2	6,000	Shop	-
Total Cost				97,700		

4. Packaging Components

PREMISE: Primary and secondary packaging components and processes will mirror those currently used in Pearl River.

DTP-Fill

- 10CC Type I Tubing Vial 13 MM finish
- FO Seal 13 MM Aluminum
- Gray Butyl Plug 13 MM
- Corrugated Tray
- Carton Sticker

DTP-Pack

- Corrugated Shipping Carton
- Corrugated Pad
- Package Insert
- Shipping Carton Label
- Pressure Sensitive Label
- Printed Box
- PE Stretch Band

DTP-Distribution

Expanded Polystyrene Container

OPV-Fill

- Irradiated Dispette
- Freezer Pail
- LDPE Bag
- Pail Label

OPV-Pack

- Polyester Laminate Roll
- PETG Copolyester Stock
- Label Circular
- Folding Box (printed)
- Corrugated Shipping Carton
- Shipping Carton Label

OPV-Distribution

Insulated Reshipper

Expanded Polystyrene Container

5. Freezers/Chillrooms/Incubators

#	Location	Size (SF)
Freezers		
1	OPV Bulk Batch	750
2	OPV Fill	400
3	Warehouse-Dispette Storage	750
4	OPV Pack	200
5	Warehouse-Unreleased Finished Goods	500
6	Warehouse-Released Finished Goods	750
	Total	**3350**
Chillrooms		
1	DTP Bulk Batch	400
2	DTP Bulk Batch	750
3	DTP Fill	400
4	Warehouse-Unlabelled Vials	500
5	Warehouse-Unreleased Finished Goods	500
6	Warehouse-Released Fiinished Goods	750
7	OPV Bulk Batch	200
8	QC Biological Testing	100
9	QC Retention and Stability	100
10	QC Retention and Stability	100
11	QC Microbiology	100
	Total	**3900**
Incubators		
1	QC Microbiology < 25 C	100
2	QC Microbiology 22-25 C	100
3	QC Microbiology 30-32 C	100
4	QC Retention and Stability	100
5	DTP Bulk	150
	Total	**550**

5

E. Building Specifications - Technical Data Sheets

The following section further describes the general function and construction requirements for the various areas of the proposed facility.

Example layouts are further provided for the QC lab and vivarium areas as well as the prototype open office space.

The purpose of this section is to aid in defining the construction cost level appropriate for each type of building area and to identify in the QC areas any major special construction or feature cost requirements such as clean rooms, fume hoods, or bio-safety cabinets where these may not have been identified in the Section IV.B Process Flow diagrams or the Section IV.C Space Requirements list.

Unclassified Manufacturing Area

Activity Function

Support spaces not requiring CGMP levels of cleanliness.

Relationship

All remaining manufacturing areas.

Construction

Floor:

Seamless floor on concrete base with integral coved base. Options include terrazzo, troweled epoxy, sheet vinyl, or sealed concrete systems, used where appropriate.

Walls:

Metal stud framing with gypsum wall board and seamless wall covering (vinyl) with coved corners for ease of maintenance. (2 layers GWB used for extra durability where required). Option in heavy traffic areas with large equipment may require concrete block with block filler and epoxy paint finish.

Ceiling:

To be exposed to structure of gypsum wallboard system, used where appropriate.

Ceiling Height:

Varies, typically 9'-0" in general spaces. 10'-0" or greater in spaces with equipment requiring greater clearances.

Systems

See Section IV.F for Mechanical Systems requirements.

Class 100,000 Area

Activity Function

These are areas in which a high level of cleanliness is required to meet CGMP requirements for general manufacturing.

Relationships

This is a buffer between unclassified and Class 10,000/Class 100 areas. See the following page for specific locations.

Airlocks require increasing levels of cleanliness as follows:

- People air locks (incoming)

  Room 1 - Class 100,000

  Room 2 - Class 10,000

- People air locks (outgoing)

  Room 1 - Class 100,000

- Equipment air locks

  Room 1 - Class 100,000

Construction

Floors:

Troweled - on or self-leveling epoxy with integral 4" or 6" coved base.

Walls:

Seamless wall covering on concrete block or metal studs. Double-thick walls for low air exhaust and utility distribution.

Provide many vision panels in walls for sight into all process spaces. Vision panels (clean room windows) have sloped sills, and are air tight. Stainless steel in key process spaces.

Ceiling:

Suspended GWB system with epoxy paint. Caulk perimeter at wall.

Special Features:

Caulk all penetrations at room. Insect and bug control for building. Caulk all building exterior penetrations. Soil treatment for insects.

Systems

See Section IV.F for Mechanical Systems requirements.

Class 10,000 and 1000 Areas

Activity Function

Sterile parts and products which are enclosed in containers are staged/handled/positioned in this area.

Relationship

This is a buffer between Class 100,000 and higher classified areas. See the previous page for specific locations.

Construction

Floor:

Troweled on or self-leveling epoxy with integral 4" or 6" coved base.

Walls:

Metal stud framing with gypsum wallboard and seamless vinyl wall covering. Flush room surfaces to minimize dust ledges and provide ease of maintenance (door closers, utility piping and connections, edges of penetrations).

Wall cavities receive ducted air returns at top of coved base. Double-thick walls for low air exhaust and utility distribution.

Ceiling:

Gasketed, Ducted Modular Suspension System (DMSS) in HEPA intensive clean room spaces. (Room classification with particulate level less than 100,000).

Ceiling Height:

Varies typically 9'-0" in general spaces. 10'-0" or greater in spaces with equipment requiring greater clearances.

Special Features:

See Class 100,000 level requirements.

Systems

See Section IV.F for Mechanical Systems requirements.

Class 100 Area

Activity Function

These are areas in which sterile product must be open to the air.

Relationship

These areas are contained within Class 1,000 and Class 10,000 areas.

Construction

Floor:

Troweled on or self-leveling epoxy with integral 4" or 6" coved based.

Walls:

Sectional plastic vertical screens surrounding the area, separating Class 100 from Class 1000/10,000 areas. Flush room surfaces to minimize dust ledges and provide ease of maintenance (door closers, utility piping and connections, edges of penetrations).

Ceiling:

Gasketed, ducted modular suspension system (DMSS) in 100% HEPA intensive clean room spaces.

Paint finish coat on structure overhead.

Systems

See Section IV.F for Mechanical Systems requirements.

Chillrooms, Freezers & Incubators

Activity Function

These areas retain product in a completely temperature and humidity controlled environment.

Relationship

Locate these rooms in DTP and OPV areas with respect to sequential flow of work-In-Process. Incoming materials and outgoing product will be stored in these rooms in the warehouse. See Section IV.D.5 for specific locations and sizes.

Construction

These units are prefabricated, insulated all metal construction, furnished and installed as a complete self-contained unit and system, with all essential plenums, controls, and balanced air circulation and all other equipment necessary to reach the following environmental conditions;

Chillrooms	2° to 8° C
Freezers	-70° C, or -20° C
Incubators	< 25° C,
	22°-25° C, or
	30°-32° C

Lighting:

Lighting fixtures to be mounted at ceiling and of sufficient quantity and intensity to provide a minimum of 50 Fc 40" above floor.

Systems

See Section IV.F for Mechanical Systems requirements.

Glassware Wash

Activity Function

Provide central glassware wash for laboratories and production areas

Relationship

Needs to be accessible to labs and production.

Construction

Floor:

Troweled on or self-leveling epoxy with integral 4" base.

Walls:

Epoxy paint on gypsum wallboard and metal stud walls.

Ceilings:

Suspended gypsum wallboard with epoxy paint.

Caulk at perimeter of walls.

Height 9'-6".

Miscellaneous:

- Painted hollow metal doors and frames.
- Heavy-duty floor support for large equipment and to minimize vibration.

Systems

See Section IV.F for Mechanical Systems requirements.

Biological Testing

Activity Function

The Biological Testing Lab performs in-vivo and in-vitro testing of DTP component bulk biological and final products. Biologicals, bulk and finished products are tested for safety (general and specific). Diphtheria and Tetanus Toxoid samples are prepared for in-vivo potency tests.

Relationships

Shall be in proximity to small animal housing and administrative support and close proximity to lab support, storage, and central glassware wash. Lab to contain a separate Lyophilization Lab.

Construction

Floor:	Seamless sheet vinyl with 4" coved sheet vinyl base.
Walls:	Gypsum wall board on metal studs. Epoxy latex paint finish.
Ceiling:	Suspended acoustical ceiling tiles.
	9'-0" ceiling height.

Special Features:

Chillroom (See this section for Chillroom requirements.)

Systems

See Section IV.F for Mechanical Systems requirements.

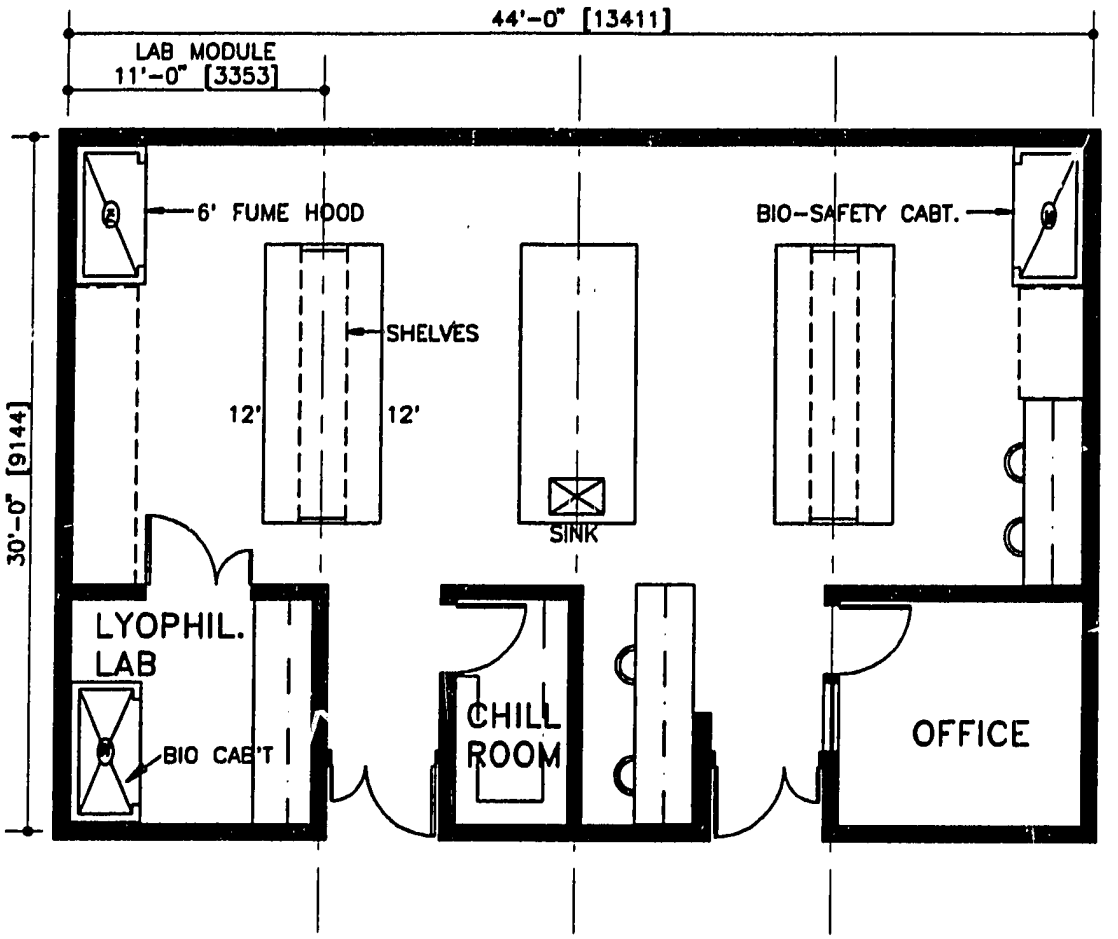

BIOLOGICAL TESTING

AREA: 1320 NSF (122793 NSmm)

DEPARTMENT: Q.C. TESTING LABORATORIES

FLAD Flad & Associates Architects Engineers Interior Designers 6600 Mineral Point Road P.O. Box 5068 Madison, Wisconsin 53705 (608) 238-2661

4.80

LEDERLE-PRAXIS BIOLOGICALS, INC.
PEARL RIVER, NEW YORK

NIS VACCINE PRODUCTION
FEASIBILITY STUDY

Project No. 92210-00

Drawn By EAS

A-2.DWG

Microbiology Lab

Activity Function

The Microbiology Lab will be used to conduct all microbiology testing for release of final filled products, bulk products, and solutions used in various stages of production. Microbiology testing is required of all biological products and is defined in strict terms in the code of Federal Regulations, Title 21, Section 610.12, as well as in the U.S. Pharmacopeia.

Relationships

Access to Media Prep and Decontamination required. Suite to contain dedicated breakroom, lockers/showers.

Construction

Floor:

Seamless sheet vinyl with 4" coved sheet vinyl base.

Walls:

Gypsum wall board on metal studs. Epoxy latex paint finish.

Ceiling:

Suspended acoustical ceiling tiles to be sealed.

HEPA filters required at Classified areas.

9'-0" ceiling height.

Special Features:

- Class 100 area (see this section for Cleanroom requirements).
- Two room incubators will be field fabricated. Walls and ceiling are insulated panels (see this section for Incubator requirements). Two smaller units prefabricated.
- Airlocks (see this section for Class 100,000 requirements).
- Chillroom (see this section for Chillroom requirements).
- Proposed future LaCalhene will require specific air changes and exterior venting.

Systems

See Section IV.F for Mechanical Systems requirements.

115

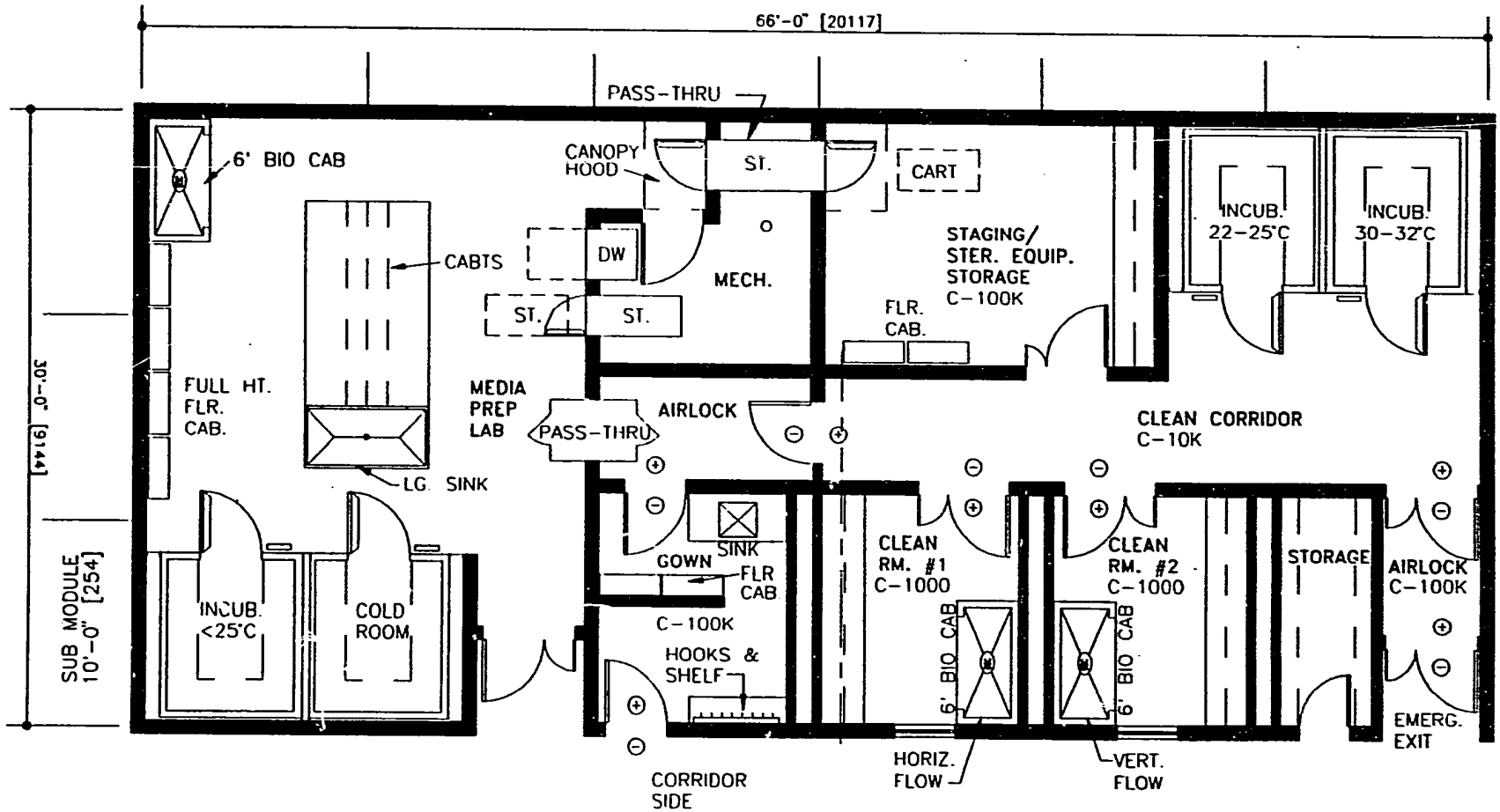

MICROBIOLOGY LAB

AREA: 1980 NSF (184189.5 NSmm)

DEPARTMENT: Q.C. TESTING LABORATORIES

FLAD

Flad & Associates
Architects, Engineers, Interior Designers
6300 Bridge Point Pkwy P.O. Box 5068
Madison, Wisconsin 53705 (608) 238-2661

4.82

LEDERLE-PRAXIS BIOLOGICALS, INC.
PEARL RIVER, NEW YORK
NIS VACCINE PRODUCTION
FEASIBILITY STUDY

Project No. 92210-00
Drawn By EAS
A-2 DWG

116

Virology Lab

Activity Function

The functions performed in this laboratory include potency tests, virus isolation and identification, which relate to OPV quality control testing.

Relationships

Close proximity to walk-in incubator and to the chill rooms. Convenient to glasswash and to freezers. Should have access to decontamination area in OPV batching.

Construction

Floor:

Seamless sheet vinyl with 4" coved sheet vinyl base.

Walls:

Gypsum wall board on metal studs. Epoxy latex paint finish.

Ceiling:

Suspended acoustical ceiling tiles.

9'-0" ceiling height.

Systems

See Section IV.F for Mechanical Systems requirements.

117

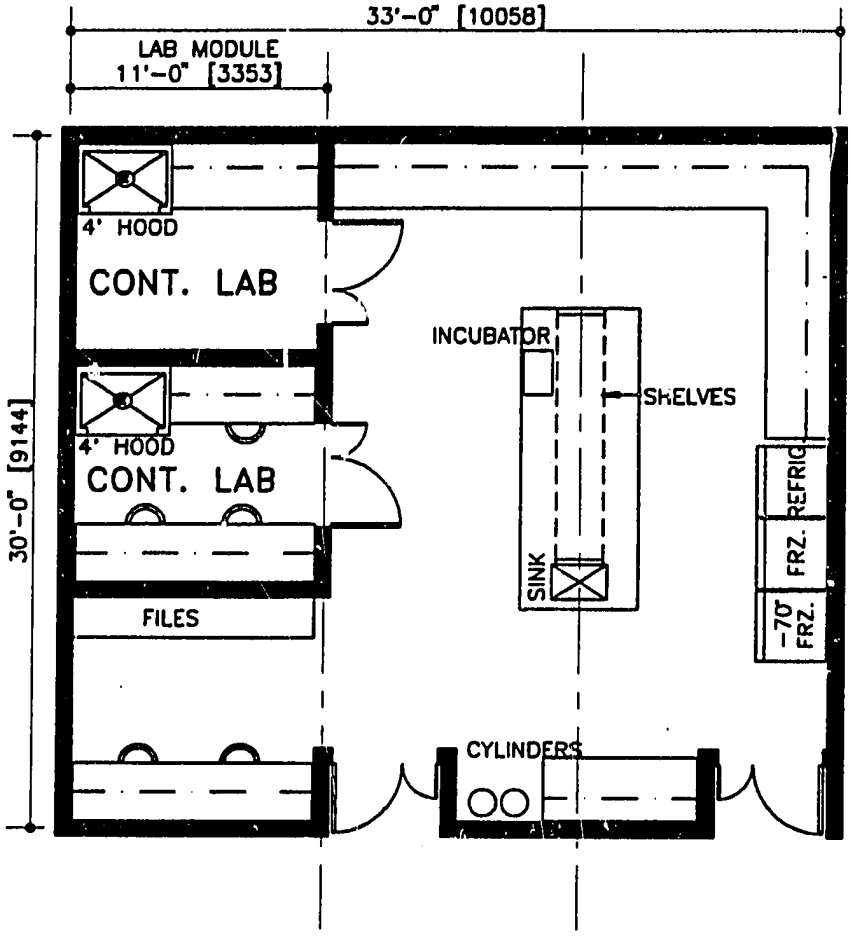

VIROLOGY LAB (STAGE 4 & 5 OPV ONLY)
AREA: 990 NSF (92094.75 NSmm)
DEPARTMENT: Q.C. TESTING LABORATORIES

FLAD Flad & Associates
Architects Engineers Interior Designers
6800 Mineral Point Road P.O. Box 5066
Madison, Wisconsin 53705 (608) 238-2661

4.84

LEDERLE-PRAXIS BIOLOGICALS, INC.
PEARL RIVER, NEW YORK
NIS VACCINE PRODUCTION
FEASIBILITY STUDY

Project No. 92210-00
Drawn By EAS
A-4.DWG

8

Chemical/Biochemical Lab

Activity Function

This laboratory contains instruments that are commonly used by the various functions/laboratories in the department. It will include equipment such as: immunoelectrophoresis, chromatography, microliter plate washers and readers, laser densitometer, micro-processed UV/VIS spectrophotometer with auto sampler and robotics systems for microliter plate assays.

The functions of this laboratory include bacterial vaccine testing and release of vaccines using biochemical techniques, such as chromatography, electrophoresis, immunochemical assays and various chemical tests.

Relationships

Close proximity to retention & stability storage, freezers, chill rooms, and incubators.

Construction

Floor:

Seamless sheet vinyl with 4" coved sheet vinyl base.

Walls:

Gypsum wall board on metal studs. Enamel paint finish.

Ceiling:

Suspended acoustical ceiling tiles.

9'-0" ceiling height.

Special Features:

Provide vibration control, such as isolated slab for sensitive instruments and robotic equipment.

Systems

See Section IV.F for Mechanical Systems requirements.

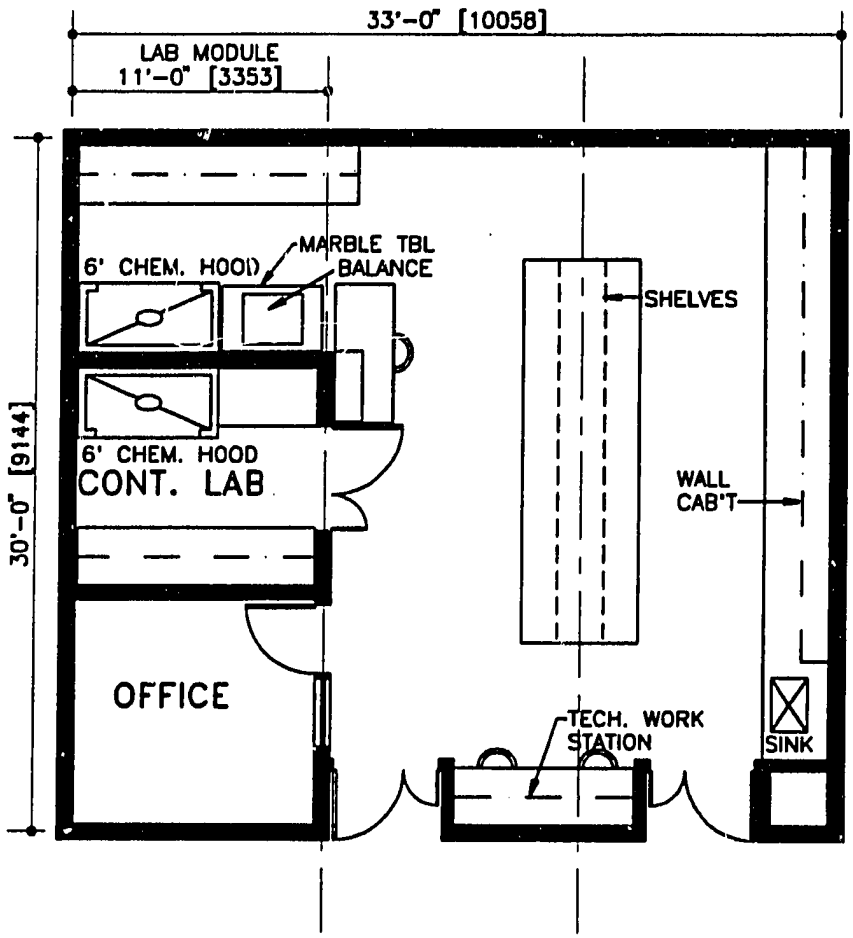

CHEMICAL LAB

AREA: 990 NSF (92094.75 NSmm)

DEPARTMENT: Q.C. TESTING LABORATORIES

FLAD Flad & Associates Architects Engineers Interior Designers 6800 Mineral Point Road P.O. Box 5068 Madison, Wisconsin 53705 (608) 238-3051

4.86

LEDERLE-PRAXIS BIOLOGICALS, INC.
PEARL RIVER, NEW YORK

NIS VACCINE PRODUCTION
FEASIBILITY STUDY

Project No. 92210-00

Drawn By EAS

A-3.DWG

120

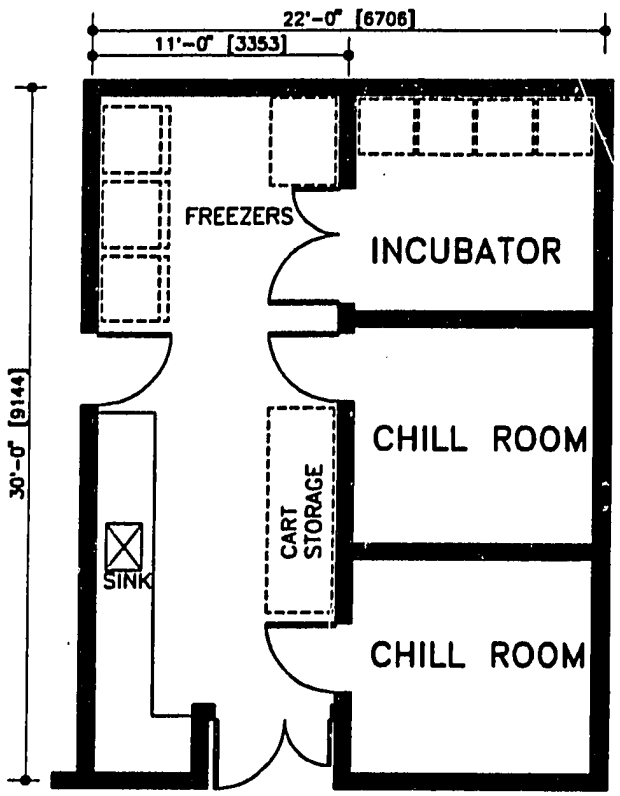

RETENTION & STABILITY STORAGE

AREA: 660 SF (61396.5 NSmm)

DEPARTMENT: TESTING LABORATORIES

FLAD Flad & Associates
Architects Engineers Interior Designers
6800 Mineral Point Road P.O. Box 5068
Madison, Wisconsin 53705 (608) 238-2661

4.87

LEDERLE-PRAXIS BIOLOGICALS, INC.
PEARL RIVER, NEW YORK

NIS VACCINE PRODUCTION
FEASIBILITY STUDY

Project No. 92210-00

Drawn By EAS

A-6.DWG

121

Vivarium

Activity Function

These rooms will house mice and guinea pigs for use in safety tests.

Relationships

These rooms will support labs and procedure room activities, and should be located near cage wash, feed preparation services, and other vivarium.

Construction

Floor:

Troweled on or self-leveling epoxy with integral 4" to 6" base.

Walls:

Epoxy wall system on concrete block.

Ceiling:

Suspended gypsum wallboard with epoxy paint.

Caulk perimeter at wall.

Height at 9'-0"

Systems

See Section IV.F for Mechanical Systems requirements.

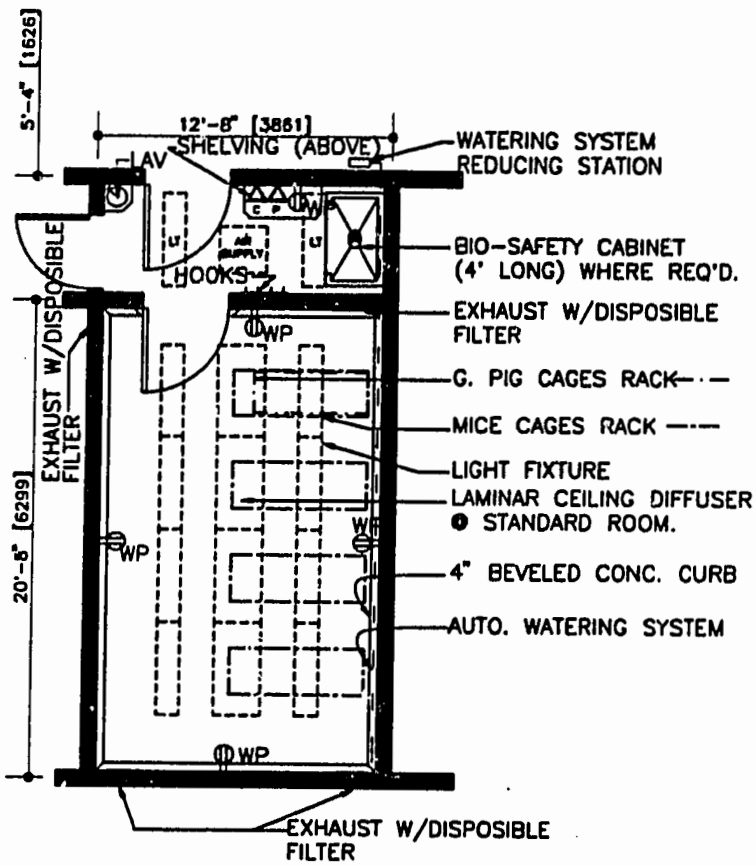

SMALL ANIMAL WITH ANTE-ROOM

AREA: 330 SF (30698.25 NSmm)

DEPARTMENT: VIVARIUM

FLAD Flad & Associates
Architects Engineers Interior Designers
6800 Mineral Point Road P.O. Box 3066
Madison, Wisconsin 53705 (608) 238-3061

4.89

LEDERLE-PRAXIS BIOLOGICALS, INC.
PEARL RIVER, NEW YORK

NIS VACCINE PRODUCTION
FEASIBILITY STUDY

Project No. 92210-00

Drawn By EAS

A-7.DWG

123

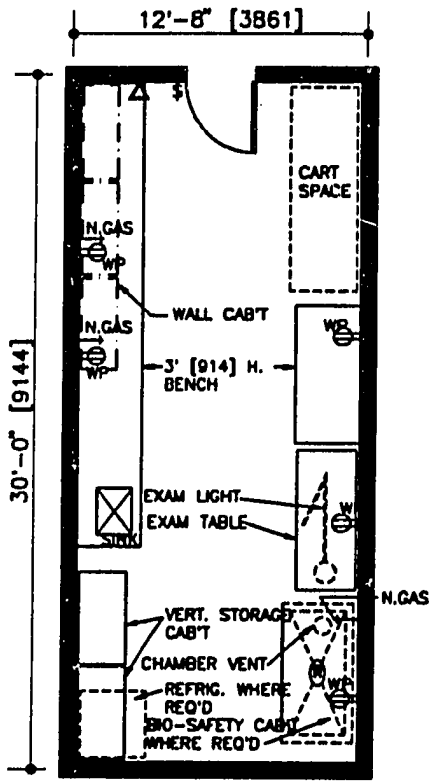

PROCEDURE LAB

AREA: 380 NSF (35349.5 NSmm)

DEPARTMENT: VIVARIUM

FLAD

Flad & Associates
Architects Engineers Interior Designers
6800 Mineral Point Road P.O. Box 2068
Madison, Wisconsin 53705 (608) 238-2661

4.90

LEDERLE-PRAXIS BIOLOGICALS, INC.
PEARL RIVER, NEW YORK

NIS VACCINE PRODUCTION
FEASIBILITY STUDY

Project No. 92210-00

Drawn By EAS

A-8.DWG

Warehousing

Activity Function

Dedicated storage for raw, in process, finished, quarantine, and released goods and general stores with associated and separate Shipping and Receiving docks. Racking systems anticipated. Includes chillrooms and freezers as defined in program.

Construction

Floor:

Sealed concrete. Floor finish to provide surface hardener, or dust/oil proof sealer to concrete slab on grade.

Walls:

Varies with location; options include painted concrete block, metal studs with GWB and chain link fence as area dividers. Use where appropriate.

Ceiling:

Exposed structure, epoxy paint finish.

Ceiling Height:

Underside of structure, coordinate with pallet height and required clearances.

Special Features:

- Dehumidified, locked storage areas will be air conditioned to maintain proper humidity levels.
- Guard/bumper rails at storage racks to prevent damage from fork truck traffic.
- Period of use - typically 24 hours/day.
- Storage racks.

Systems

See Section IV.F for Mechanical Systems requirements.

125

Offices, Private

Activity Function

Provide enclosed offices for managers and technical specialists.

Relationship

Near other related offices and support functions.

Construction

Floor:

Medium grade roll carpet with 4" straight vinyl base.

Walls:

Gypsum wallboard on metal studs with latex enamel paint.

Ceilings:

Suspended 2' x 2' or 2' x 4' lay-in acoustical tile.

Height at 9'-0".

Miscellaneous:

- Solid core wood doors with hollow-metal frames and side lights.
- Fixed windows will be provided where possible.

Systems

See Section IV.F for Mechanical Systems requirements.

126

Offices, Open

Activity Function

Workstations for managerial, technical, and clerical staff.

Relationship

Offices should be close to the operational areas they service.

Construction

Floor:

Medium grade roll carpet with 4" straight vinyl base.

Walls:

Movable partitions 60" high with power and communication in base.

Ceilings:

Suspended 2' x 2' or 2' x 4' lay-in acoustical tile.

Miscellaneous:

- No doors. Windows are desirable but not typical.
- Open office furniture components (owner furnished and installed)

Systems

See Section IV.F for Mechanical Systems requirements.

Conference Rooms

Activity Function

Provide enclosed meeting space in a range of sizes.

Relationship

Conference areas should be located within the department area shown, to promote interaction of personnel.

Construction

Floor:

Medium grade roll carpet with 4" straight vinyl base.

Walls:

All wall surfaces should be tackable floor to ceiling.

Ceilings:

Suspended 2' x 2' or 2' x 4' lay-in acoustical tile.

Height at 9'-0".

Miscellaneous:

All conference rooms should have projection capability for 35mm slides and overhead projectors.

Marker board and pull-down overhead projector screen at one wall.

Systems

See Section IV.F for Mechanical Systems requirements.

Classified Area Summary

Building	Department	Room	Classified Area (SF) 100,000	10,000	*100	100
Manufacturing						
	DTP Bulk	Process		1,000	10' X14'	140
		Mixing		100		
	DTP Fill	Vial Prep	1,200			
		Capping		300		
		Stopper Procesg		300	6' X10'	60
		Fill	1,000			1,000
	OPV Batch	Batch Room		875	8' X 12'	96
	OPV Fill	Fill Line		400	8' X 12'	96
		Inspection		350		
	OPV Packaging	Packaging Lin .		1,500		
	Media Prep	Kettle Room		1,000	8' X 12'	96
		Aseptic Filtration			8' X 12'	96
		QC Media		250		
	Glasswash					100
	Total		**2,200**	**6,075**		**1,684**
Quality Control						
	Microbiology Lab	Sterility Suite	990			
		Clean Room			8' X12"	96
		Clean Room			8' X12'	96
	Total		**990**	**0**		**192**
Overall Total			**3,190**	**6,075**		**1,876**

* Dimensioned Class 100 areas are enclosed within the associated Class 10,000 or 100,000 areas.

Biosafety Requirements Summary

Department	Suite	Room	BSL Level	Comment
Quality Control Vivarium	Breeding	Animal holding & breeding	2	
	Test	Animal testing	2	
Quality Control Test Labs			-	No special BSL design necessary
DTP	DTP		-	No special BSL design necessary
OPV	OPV	Entire suite: batch, fill, pack and all support.	2	Attenuated strain of polio
Media Prep			-	No special BSL design necessary
Glasswash			-	No special BSL design necessary . Attenuated polio virus is killed in OPV area

Chemical Requirements Summary

Department	Room	Type/Quantity of Material	Comment
Quality Control Vivarium	Cage cleaning	Acid-based chemicals	Diluted waste water used for cleaning. Need for non-reactive surfaces
Quality Control Test Labs	Solvent Storage		Small area is needed. Usage in labs is small and in hoods.
DTP			No solvent usage
OPV	Filter Integrity Test Lab	20 gallons solvents	Usage is in hood. Stored in cabinets
Media Prep	Media Prep Area	A few acids and bases	Stored in cabinets
	Weigh Room	Thimerosol	Weigh powder under hood. Powder is added to bottle with water
Glassware			No solvent usage
Warehouse	Waste Handling/ Temp. Storage	5-10 gallons solvents	Backup storage in cabinets for Media Prep

131

F. Systems Basis of Design

Introduction

This section of the report defines the basis for developing space requirements, construction cost data and operating cost data for process piping, mechanical, and electrical systems to support the manufacturing process and building requirements.

The section is divided into six parts as follows:

1. Process Piping Systems

2. Process Utility Systems

3. Primary Site Utilities

4. Primary Building Systems

5. Process Equipment Utility Consumption

6. Building Utility Load and Consumption

The first four sections consist of either a narrative or detailed flow diagrams depending upon system complexity and the value to improving the accuracy of space allocation and construction cost estimates.

The fifth and sixth sections list the utility load and consumption data used to design the systems and estimate their operational cost.

Assumptions and Clarifications

The following assumptions were made in the development of the information contained in this section:

Site

- Site is assumed to be in a developed area with utility services for water, sanitary sewer, natural gas, electrical power, telecommunications of adequate size and capacity within 150 meters (500 feet) of the building.

- Fire loop is a supplied via a new water tower. Fire hydrants will be provided every 150 meters (500 feet).

- Sanitary sewer is a forced main system. Two meters (6 feet) is sufficient depth to protect sewer from frost.

- Water from existing water treatment plant is at sufficient water pressure to serve the building water systems without booster pumping systems.

- No storm sewer is available. No retention ponds are included at this time.

Building Systems

- Process and lab equipment procurement is addressed in other portions of this report. Connections to process and lab equipment are included in this section of the report.

- Satellite communication is procured as a separate project. Connection to satellite equipment is included.

Load and Consumption Estimates

- Estimates are based on best available data and may vary significantly from actual measured results. Estimates are highly dependent on many factors such as actual operating procedures and construction details and configuration, etc.

1. Process Piping Systems

The product transfer system in the production area, will be a series of 316L stainless steel piping systems within and between manufacturing areas.

The motive force in the transfer of product will be pharmaceutical compressed air at 3.1 bar (30 psig).

The transfer piping will be sterilized in place via clean steam at 3.1 bar (30 psig).

All of the tanks will be ASME rated for 3.8 bar (40 psig) and full vacuum.

The target transfer time will be less than thirty minutes.

Transfer piping will connect the media prep, batching, and filling areas.

2. Process Utility Systems

- Purified Water - Site P2.1
- Water For Injection - DTP P2.3
- Water For Injection - OPV P2.4
- Pharmaceutical Compressed Air P2.5
- Clean Steam P2.6

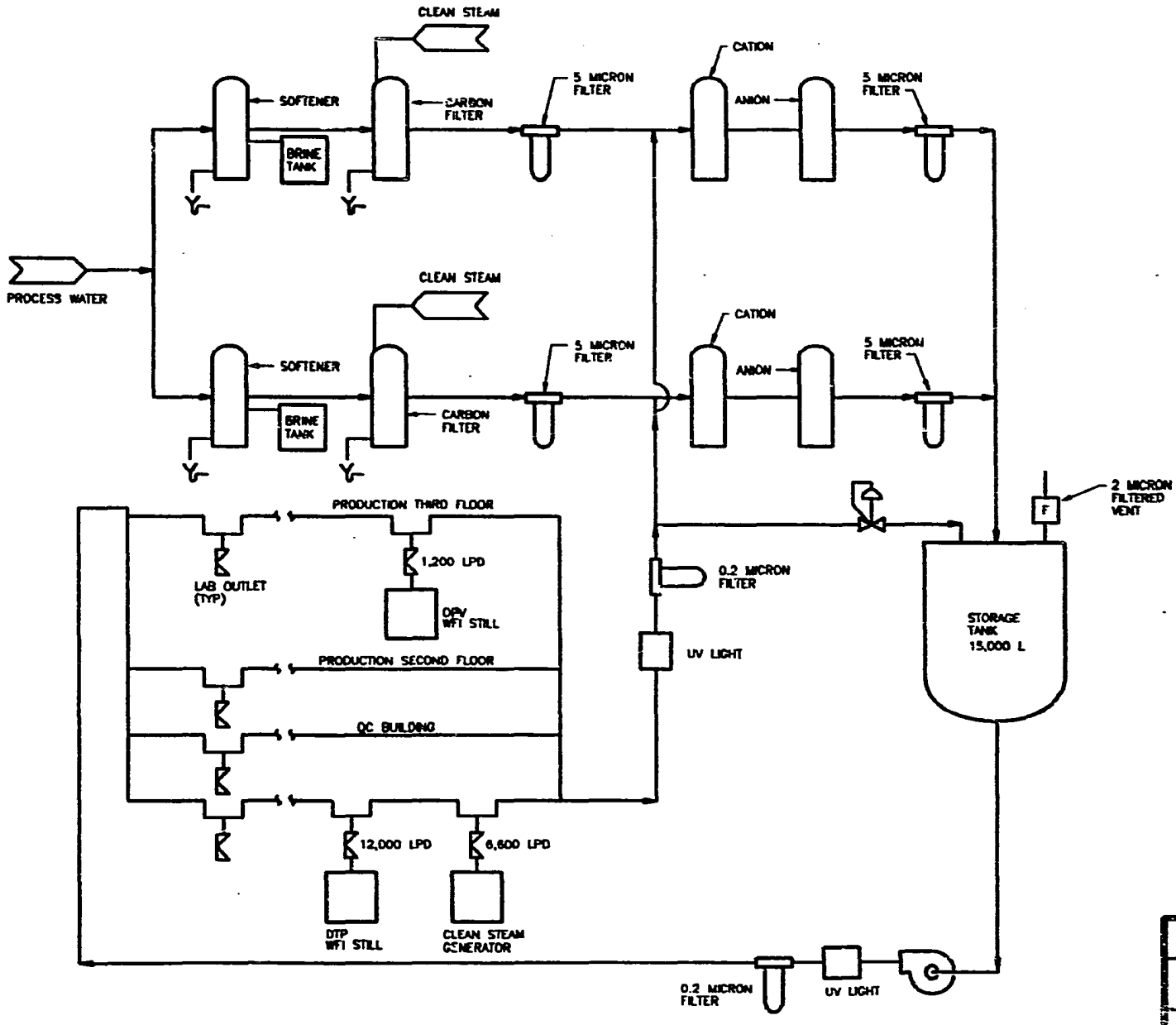

DESIGN CRITERIA

WATER QUALITY:
200,000 Ω-cm MIN. RESISTIVITY.
CHLORINE – NON DETECT.
AMINES – NON DETECT.
SILICA – 0.1 PPM MAX.

CIRCULATION RATE = 1.5 M/S (5FPS)

PIPING MATERIAL = 316L STAINLESS STEEL.

CONSUMPTION = 27,000 LITERS/DAY.

SYSTEM DESCRIPTION

PURE WATER WILL BE PRODUCED IN THE CENTRAL UTILITY PLANT AND DISTRIBUTED TO SERVE AS FEED WATER FOR THE WFI SYSTEMS, THE CLEAN STEAM GENERATOR, PRODUCTION, AND THE QC LAB FUNCTIONS.

PURE WATER WILL BE PRODUCED BY TAKING PROCESS WATER FROM THE BUILDING WATER SUPPLY AND PASSING THROUGH CARBON FILTERS, SOFTENER, AND CATION/ANION DEIONIZATION.

THE DISTRIBUTION SYSTEM WILL BE REVERSE RETURN MAINS WITH A SERIES LOOP FOR EACH PRODUCTION FLOOR AND THE QC LAB.

PURE WATER SYSTEM FLOW DIAGRAM

AEI

LEDERLE-PRAXIS BIOLOGICALS
NIS VACCINE PRODUCTION FACILITY

PURE WATER SYSTEM | P2.1

DISTILLATION WILL BE USED TO REMOVE REMAINING FORMS OF CONTAMINATION FROM THE PURE WATER SYSTEM TO PRODUCE WFI. THIS WILL BE ACCOMPLISHED THROUGH THE USE OF A MULTI-EFFECT STILL. THE STILL WILL USE PLANT STEAM AS AN ENERGY SOURCE.

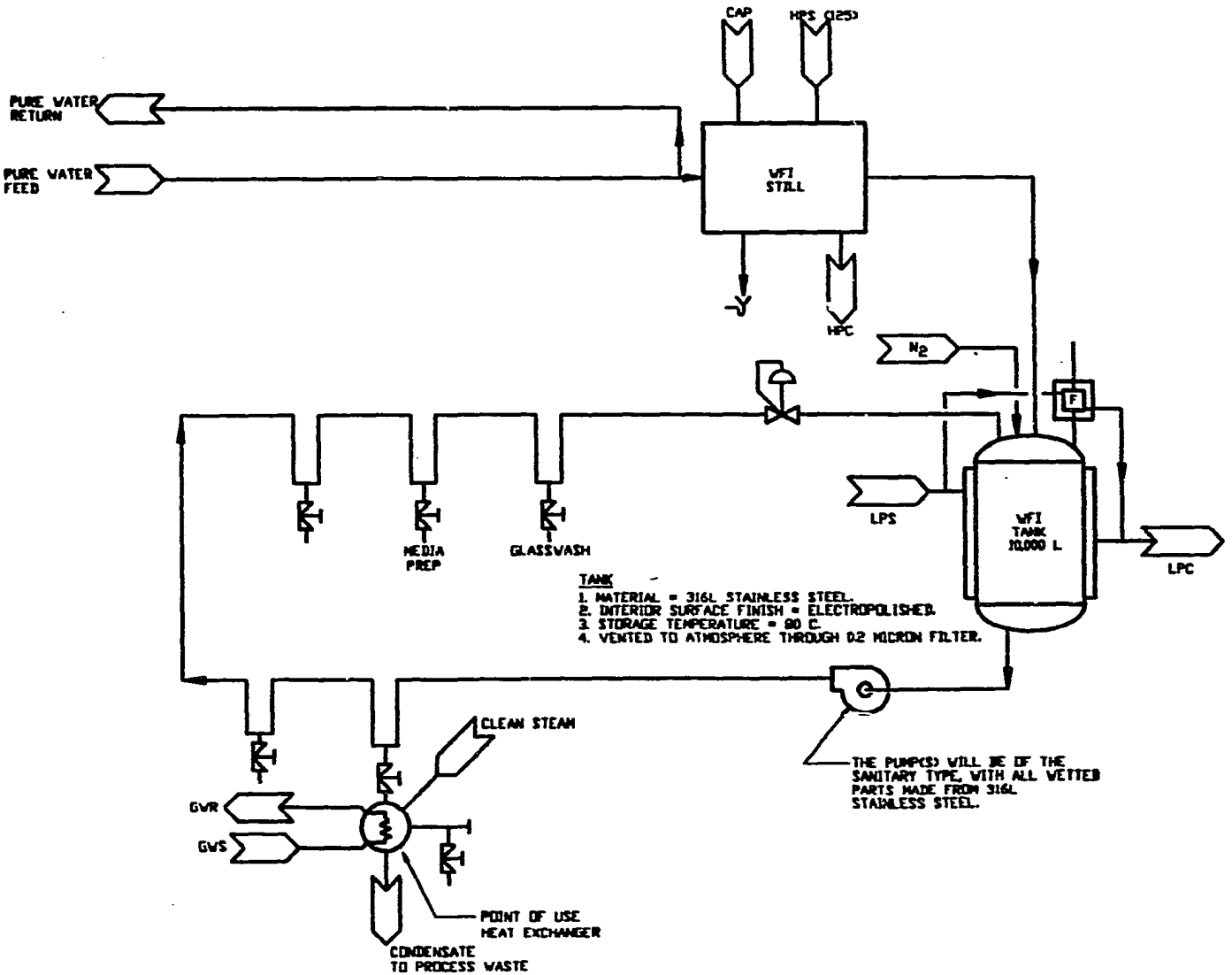

TANK
1. MATERIAL = 316L STAINLESS STEEL.
2. INTERIOR SURFACE FINISH = ELECTROPOLISHED.
3. STORAGE TEMPERATURE = 80 C.
4. VENTED TO ATMOSPHERE THROUGH 0.2 MICRON FILTER.

WATER FOR INJECTION FLOW DIAGRAM

DESIGN CRITERIA

THE DISTRIBUTION SYSTEM WILL BE A CONTINUOUS LOOP CIRCULATED AT 1.5M/SEC(FPS).

PIPING MATERIAL WILL BE 316L STAINLESS STEEL FABRICATED USING AUTOMATIC ORBITAL TIG WELDING WITH ARGON PURGE.

THE PIPING SYSTEM WILL BE PITCHED TO ALLOW THE SYSTEM TO BE COMPLETELY DRAINED. THE SPECIFIC PIPING PITCH WILL BE 1/8" PER FOOT.

MAXIMUM DEAD-LEG LENGTH = 5 PIPE I.D.'S. ALL VALVES ON THE SYSTEM WILL BE SANITARY DESIGN DIAPHRAGM VALVES.

WATER WILL BE DISTRIBUTED AT 80°C - 90°C.

SYSTEM DESCRIPTION

THE WATER FOR INJECTION SYSTEM WILL PRODU AND DISTRIBUTE WATER TO PRODUCTION AREAS REQUIRED IT. THE WATER WILL BE PROCESSED THAT THE LEVEL OF DISSOLVED INORGANIC, ORGANICS, PARTICULATES, AND PYROGENS/BACTE MEETS USP XXII STANDARDS FOR WATER FOR IN

WATER FOR INJECTION WILL BE PRODUCED BY P THE PURE WATER FEED THROUGH THE MULTIPLE EFFECT STILL.

ALTERNATIVE SYSTEM

CONSIDERATION WAS GIVEN TO USING A MECHANICAL VAPOR COMPRESSION STILL IN LIEU OF A MULTIPLE EFFECT STILL.

WE ARE RECOMMENDING THE MULTIPLE EFFECT STILL BASED ON LOWER OPERATING COST, EASIER CLEANABILITY AND LOWER MAINTENANCE CONSIDERATIONS.

AEI

LEDERLE-PRAXIS BIOLOGICALS
NIS VACCINE PRODUCTION FACILITY

DPT
WATER FOR INJECTION

P2.3

DISTILLATION WILL BE USED TO REMOVE REMAINING FORMS OF CONTAMINATION FROM THE PURE WATER SYSTEM TO PRODUCE WFI. THIS WILL BE ACCOMPLISHED THROUGH THE USE OF A MULTI-EFFECT STILL. THE STILL WILL USE PLANT STEAM AS AN ENERGY SOURCE.

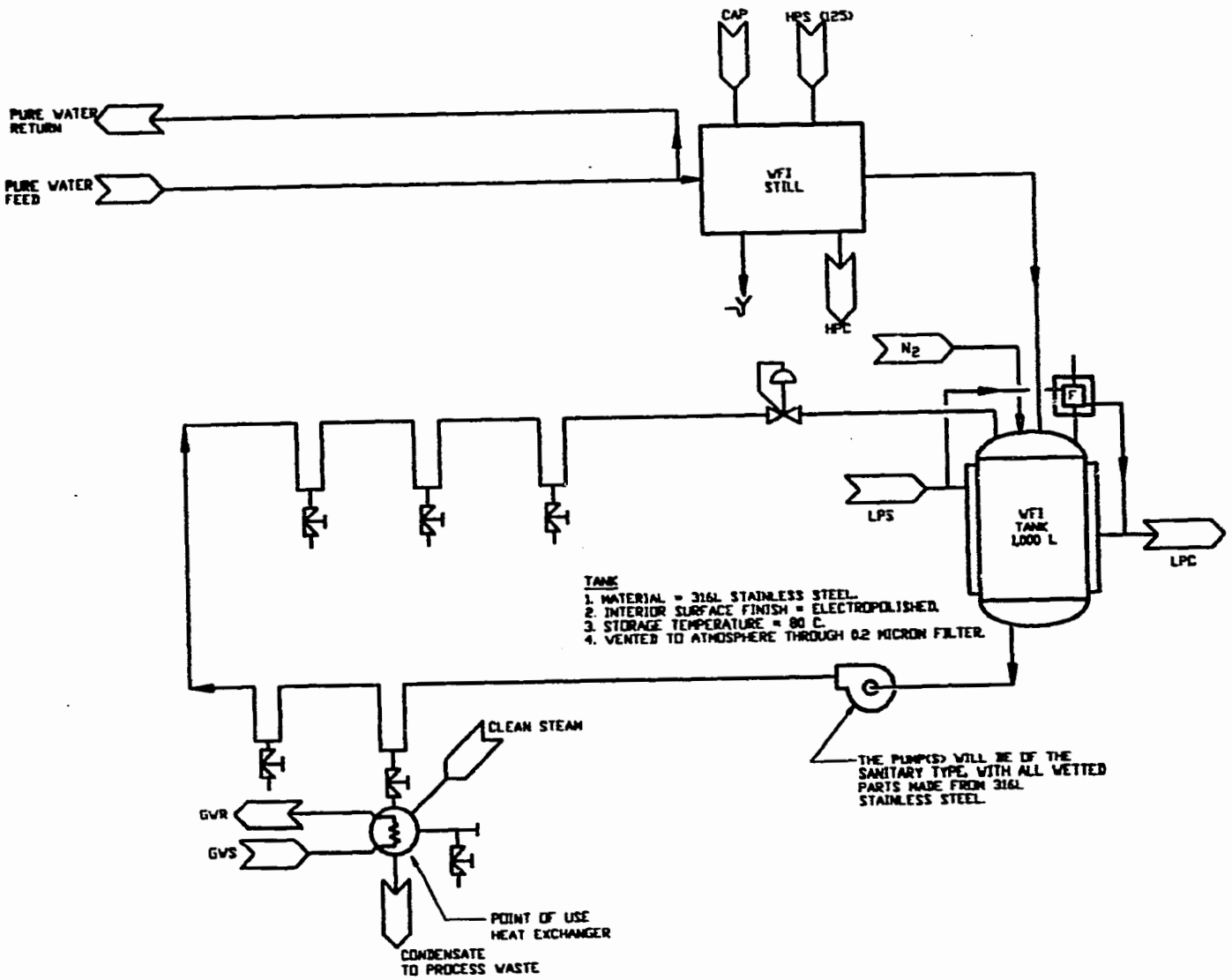

TANK
1. MATERIAL = 316L STAINLESS STEEL.
2. INTERIOR SURFACE FINISH = ELECTROPOLISHED.
3. STORAGE TEMPERATURE = 80 C.
4. VENTED TO ATMOSPHERE THROUGH 0.2 MICRON FILTER.

WATER FOR INJECTION FLOW DIAGRAM

DESIGN CRITERIA

THE DISTRIBUTION SYSTEM WILL BE A CONTINUOUS LOOP CIRCULATED AT 15M/SCFPS).

PIPING MATERIAL WILL BE 316L STAINLESS STEEL FABRICATED USING AUTOMATIC ORBITAL TIG WELDING WITH ARGON PURGE.

THE PIPING SYSTEM WILL BE PITCHED TO ALLOW THE SYSTEM TO BE COMPLETELY DRAINED. THE SPECIFIC PIPING PITCH WILL BE 1/8" PER FOOT.

MAXIMUM DEAD-LEG LENGTH = 3 PIPE I.D.'S. ALL VALVES ON THE SYSTEM WILL BE SANITARY DESIGN DIAPHRAGM VALVES.

WATER WILL BE DISTRIBUTED AT 80°C - 90°C.

SYSTEM DESCRIPTION

THE WATER FOR INJECTION SYSTEM WILL [illegible] AND DISTRIBUTE WATER TO PROD[illegible] REQUIRED IT. THE WATER WILL [illegible] THAT THE LEVEL OF DISSOLVED ORGANICS, PARTICULATES, AND PY[illegible] MEETS USP XXI STANDARDS FOR [illegible]

WATER FOR INJECTION WILL BE [illegible] THE PURE WATER FEED THROUGH THE MULT[illegible] EFFECT STILL.

ALTERNATIVE SYSTEM

CONSIDERATION WAS GIVEN TO USING A MECHANICAL VAPOR COMPRESSION STILL IN LIEU OF A MULTIPLE EFFECT STILL.

WE ARE RECOMMENDING THE MULTIPLE EFFECT BASED ON LOWER OPERATING COST, EASIER CLEANABILITY AND LOWER MAINTENANCE CONSIDERATIONS.

AEI

LEDERLE-PRAXIS BIOLOGICALS
NIS VACCINE PRODUCTION FACILITY

DPV
WATER FOR INJECTION

P2.4

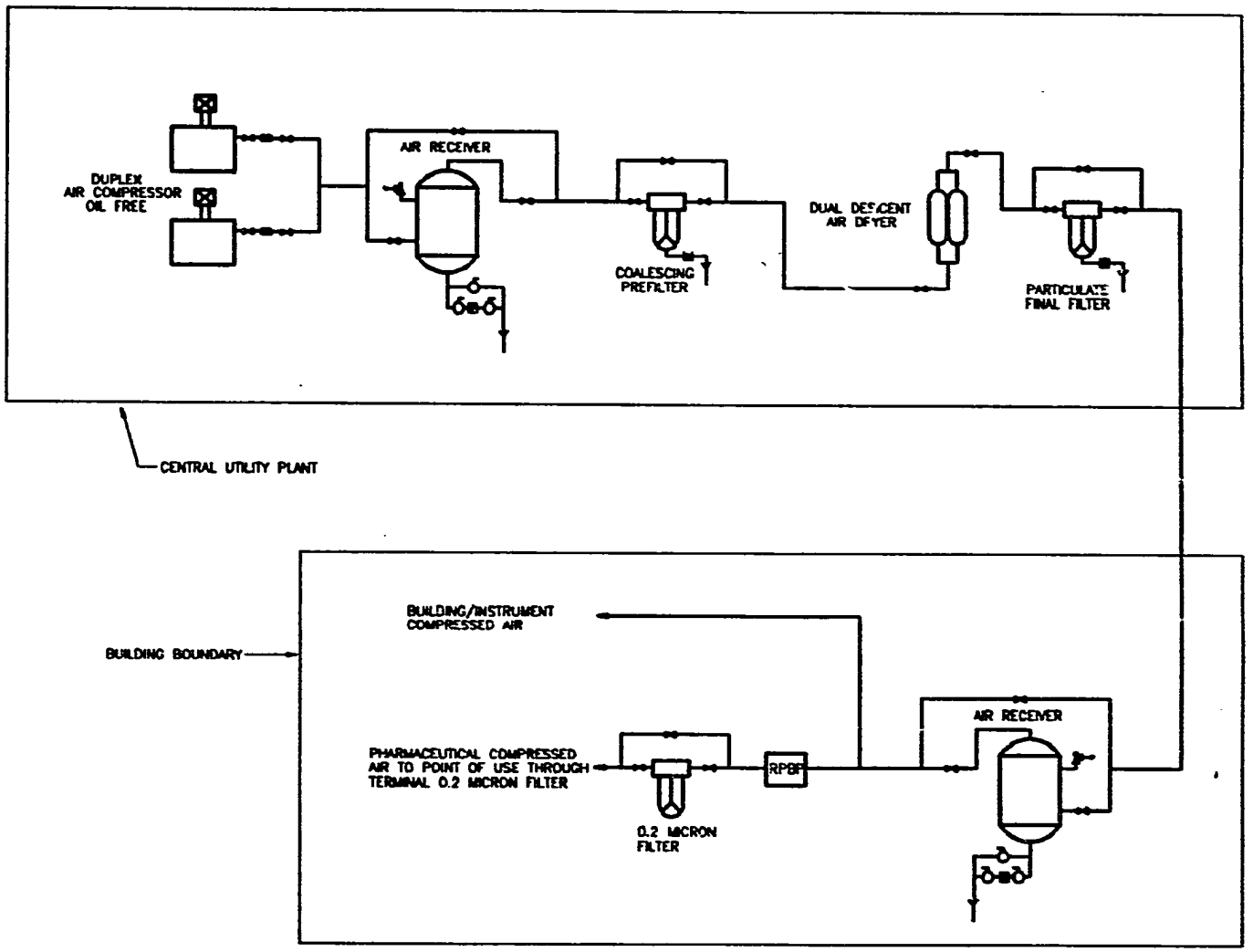

COMPRESSED AIR FLOW DIAGRAM

DESIGN CRITERIA

PRESSURE: 9.6 BAR (125 PSIG).

DRYNESS: -40°F PRESSURE DEW POINT.

VELOCITY: < 4000 FEET PER MINUTE.

SIZING: UNIFORM PRESSURE LOSS WILL NOT EXCEED 10% OF DELIVERED PRESSU

COMPRESSORS: OIL FREE, WATER COOLED ROTARY SCREW.

DRYER: DUAL DESICCANT, HEATLESS, REGENERATIVE

SYSTEM DESCRIPTION

PHARMACEUTICAL COMPRESSED AIR EQUIPMENT WILL BE LOCATED IN THE CENTRAL UTILITY PLANT.

IT WILL BE DISTRIBUTED TO EACH BUILDING TO PROVIDE COMPRESSED AIR, INSTRUMENT AIR, AND PHARMACEUTICAL COMPRESSED AIR.

A DUPLEX SYSTEM WILL BE PROVIDED FOR 100% REDUNDANCY INCLUDING ASSOCIATED SUPPORT EQUIPMENT; PREFILTERS, DUAL-DESICCANT DRYERS AND FINAL FILTERS.

AEI

LEDERLE-PRAXIS BIOLOGICALS
NIS VACCINE PRODUCTION FACILITY

COMPRESSED AIR

P2.5

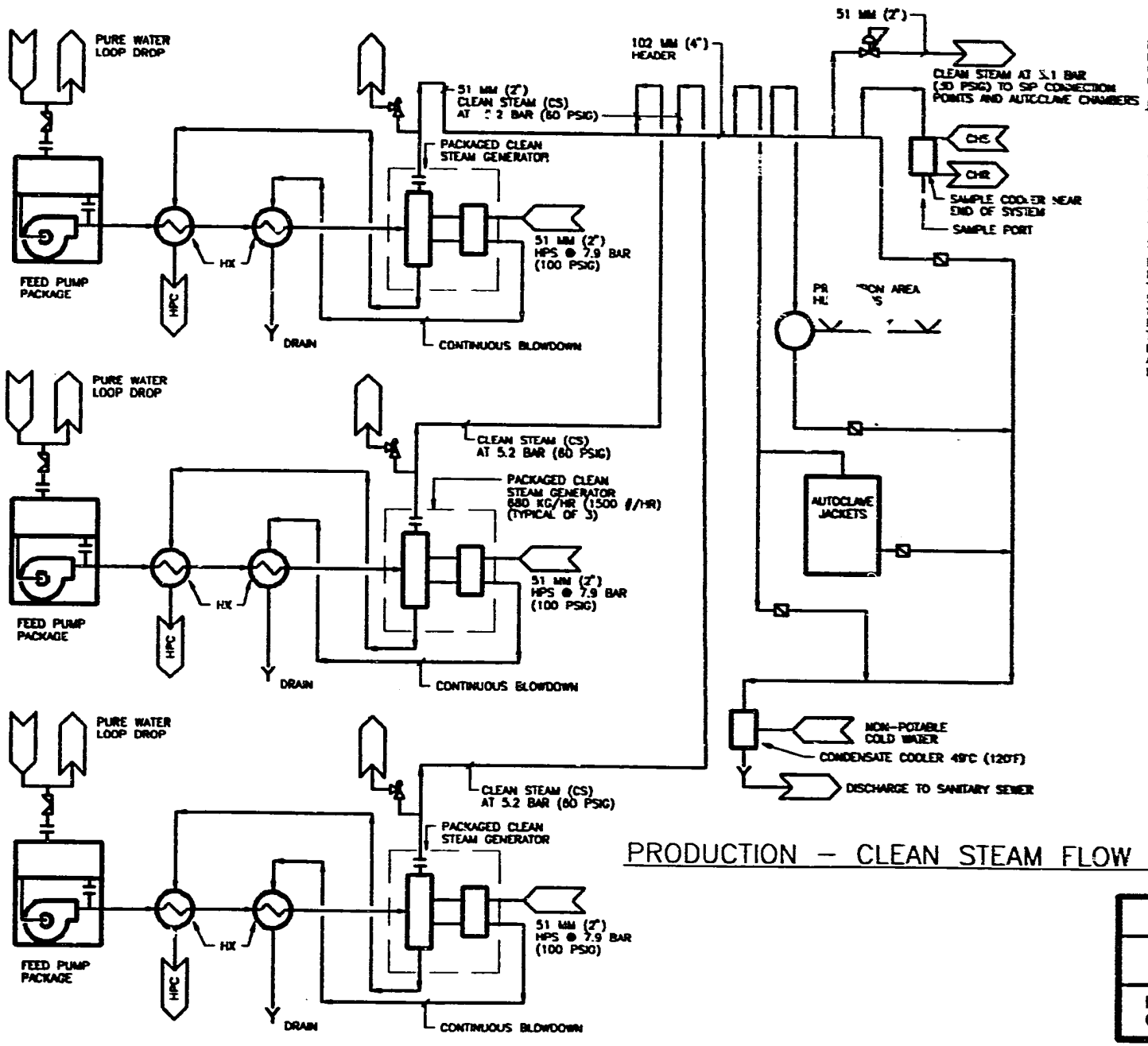

HPS(120) = HIGH PRESSURE STEAM AT 120 PSIG
HPC = HIGH PRESSURE CONDENSATE
CHS = CHILLER WATER RETURN
CHR = CHILLER WATER SUPPLY

DESIGN CRITERIA

CLEAN STEAM WILL BE GENERATED AT 5.2 BAR (80 PSIG) USING PURIFIED WATER AS FEED WATER AND PURE STEAM AS HEAT SOURCE.
PACKAGED CLEAN STEAM GENERATOR WILL BE 316 STAINLESS STEEL. CLEAN STEAM PIPING TO BE 316 STAINLESS STEEL WITH SANITARY FITTINGS. VALVES STAINLESS STEEL DIAPHRAGM WITH SANITARY CONN. STEAM TRAPS TO BE STAINLESS STEEL THERMOSTATIC TRAPS WITH SANITARY FITTINGS.
ALL CLEAN STEAM CONDENSATE IS COOLED TO 120°F THEN DISCHARGED TO THE SANITARY SEWER.
EACH CLEAN STEAM GENERATOR WILL BE SIZED FOR LOAD EQUAL TO 100% OF STEAM HUMIDIFIERS, PLUS THREE LARGEST SIMULTANEOUS SIP (STEAM-IN-PLACE) STERILIZING LOADS. SIP LOAD FOR EACH EQUIPMENT WILL BE EQUAL EQUIPMENT VENDOR DATA OR THE FLOW REQUIRED TO HEAT EQUIPMENT MASS FROM TEMPERATURE (22°C) TO 121°C AND TO OFFSET HEAT LOSS TO MAINTAIN 121°C.
A STANDBY GENERATOR WILL BE FOR N+1 REDUNDANCY

PRODUCTION – CLEAN STEAM FLOW DIAGRAM

AEI

LEDERLE-PRAXIS BIOLOGICALS
NIS VACCINE PRODUCTION FACILITY

PRODUCTION
CLEAN STEAM FLOW DIAGRAM

P2.6

141

3. Primary Site Utilities

1. Water
2. Fire Suppression
3. Sanitary Sewer
4. Storm Sewer
5. Fuel Sources
6. Electrical Power
7. Communications

Water

Water will be supplied to the facilities via the new Central Utilities Plant, by connecting to the existing water treatment system. Existing water pressure appears to be adequate; approximately 6.5 - 6.9 bar (80-85 psig). Backflow preventers will be provided to separate the existing system from the new facilities.

Fire Suppression

The same site water main that supplies the Central Utility Plant will feed a new 1,140,000 liters (300,000 gallon) water tower in order to provide the peak water load for interior fire suppression and the exterior fire hydrant loop. Fire pumps will be provided.

A detector check valve will be provided at the point of connection to the new water supply.

Flow rates for the sprinkler system of 5,700 LPM (1,500 GPM) to 6,800 LPM (1,800 GPM) can be anticipated to meet density requirements.

Sanitary Sewer

A sanitary waste and treated process/lab waste will be disposed of through a new pumping station in the CUP. The new pumping station will connect into the existing sanitary sewer system.

Waste flow volumes of up to 280,000 LPD (74,000 GPD) can be anticipated.

Storm Sewer

A storm drain system will be provided to convey rain water from flat roofs and parking areas and drain to grade.

Maximum rainfall rate for design purposes is assumed to be 15.24 cm/hr (6"/hr) intensity for a 100 year frequency, 15 minute duration occurrence. This can also be expressed as 2.5 LPM/square meter (0.0625 GPM/Sq. Ft.) flow rate from an impervious surface.

Fuel Sources

Natural gas will be provided to the new facilities. An assumption is made that high pressure gas, 1.3 to 1.7 bar (4 psig to 10 psig) is available for the building utility generation.

Natural gas is assumed to be primarily methane with a higher heating value of 13,264 KCal/kg (23,875 Btu/lbm).

Because the gas source is 'uninteruptable', no backup fuel will be provided.

Electrical Power

Electrical power will be supplied to the facilities via the Central Utility Plant from a single 110 kV transmission feeder to be brought to a substation at the site and transformed down to 10 kV for distribution. A single feeder will then be routed to the Central Utility Plant from the substation via overhead lines.

The Central Utility Plant will house a double-ended switchgear line up and radial distribution system at 380Y/220 volts. The switchgear would maintain a normally open tie switch with automatic switching to allow transfer of load to the opposite transformer in the event of a loss of one transformer. The distribution system will feed the mechanical equipment in the CUP and feed switchboards located in each building.

Communications

A dedicated PBX telephone switch will be provided/sized to handle the entire building. Each telephone or data outlet to be hard wired into the switch. The PBX switch will provide inter-station (intercom) communications.

Dedicated outside lines from local telephone exchange will be provided for communications to local area.

A satellite communication up link and down link tied into leased communications satellite for data/voice communications back to USA and home office will be provided.

4. Primary Building Systems

Narratives

- Potable Hot and Cold Water
- Lab/Process Hot and Cold Water
- Fire Protection
- Lab Vacuum System
- Waste Systems
- Telephone/Data
- Fire Alarm
- Security
- Building Automation/Control

Flow Diagrams

• Steam System - CUP	P1.1
• Steam System - Distribution	P1.2
• Heating Hot Water	P1.3
• Chilled Water	P1.4
• Process Chilled Water	P1.5
• Tower Water	P1.6
• Electrical Power	E1.1
• Telephone/Data	E1.2
• Fire Alarm	E1.3
• Security	E1.4
• Lighting	E1.5

Potable Hot and Cold Water

Potable water will be supplied to the CUP via a feed from the existing water treatment plant. Cold potable water will be distributed to each building.

145

Potable hot and/or cold water will be provided for all toilet rooms, emergency shower/eyewash units, food service areas, and all other devices that require a potable water supply. The piping system will be sized by totaling the supply fixture units (SFU) assigned to each fixture at a velocity not exceeding 2.4 M/S (8 FPS). The building water distribution system will be isolated from the main water supply by providing backflow preventers at the water entrance. Potable water will also be used as the feed for the lab/process hot and cold water system described below.

Steam to water shell and tube heat exchangers will be provided at each building, to produce hot water at 43.3°C (110°F).

The hot and cold water distribution piping will be Type L copper with wrought copper fittings and lead free soldered joints. The hot water system will be circulated to maintain temperature.

All water piping will be insulated.

Lab/Process Hot and Cold Water

Lab/process hot and/or cold water will be provided for all laboratory and process related fixtures and devices that require a water supply. Dedicated systems (with backflow prevention) will be provided for each product line and lab building. The piping system will be sized by totaling the supply fixture units (SFU) assigned to each fixture/or device at a velocity not exceeding 2.4 M/S (8 FPS). The lab water distribution system will be isolated from the domestic system by providing backflow preventers at the lab water system source.

Steam to water shell and tube heat exchangers will be provided to produce hot water at 60°C (140°F).

146

The hot and cold water distribution piping will be Type L copper with wrought copper fittings and lead free soldered joints. The hot water system will be circulated to maintain temperature.

All water piping will be insulated.

Fire Protection

All heated areas will be protected by a total coverage automatic wet sprinkler system. All unheated areas will be provided with a dry pipe sprinkler system. The systems will be designed in accordance with NFPA-13 guidelines.

Hydraulic design densities will be 0.73 LPM/square meter over a hazard area of 279 square meters (0.18 GPM/square feet over a hazard area of 3,000 square feet) in laboratory spaces and 0.48 LPM/square meter over a hazard area of 279 square meter (0.12 GPM/square feet over a hazard area of 3,000 square feet) in office areas.

Piping for the sprinkler and standpipe systems will be carbon steel with fitting type appropriate for the size of the pipe.

Lab Vacuum System

A lab vacuum system at 100 mm absolute (26" Hg gauge) at the outlet, will be provided to serve lab and fume hood outlets.

The distribution system will be sized so that line velocities do not exceed 25.4 M/S (5,000 feet per minute) and total system friction loss due to flow does not exceed 51 mm Hg (2" Hg). The vacuum pumps will be sized by totaling the M^3/S (cfm) required per outlet and using a diversity factor of 0.40.

147

Lab vacuum will be produced by a packaged liquid ring vacuum pump system with receiver and automatic controls. Vacuum pump seal will be water. The vacuum pump will be exhausted through the roof.

The lab vacuum piping system will be type L copper and wrought copper fittings with soldered joints.

Waste Systems

Sanitary sewage generated from toilet rooms, showers, food service areas, etc., will be a gravity flow system connected to the existing pumping station. All fixtures will be trapped and vented.

The lab waste system will be a gravity flow system utilizing corrosion resistant piping conveying lab and/or process wastes to the existing pumping station in the CUP. The local neutralization systems will provide pH correction to lab and/or process wastes via limestone or marble chip contact basin. All fixtures and drains will be trapped and vented.

Animal waste will be a dedicated piping system and will be discharged to the existing pumping station. All drains and fixtures will be trapped and vented.

A dedicated product waste system will be provided to receive waste and effluent from cleaning of storage vessels and product transfer lines, filling equipment, etc.

Product waste disposal will include:

- Local deactivation.
- Waste neutralization.
- Discharge to sanitary sewer.

Telephone/Data

Telephone service and satellite communications up/down link will terminate in a main telephone switch room. From the central switch a fiber optic backbone distribution will radially serve communication closets located in each area of the facility. The backbone raceway will consist of cable tray run in the corridors.

From the communication closets, individual telephone and data branch feeders will be distributed to the selected locations. Those locations to include offices, wall phone in each laboratory module, secretary areas, locker or gown areas and conference rooms. Hands-free type units may be placed in production areas as needed.

Branch wiring typically to be four-pair, unshielded twisted-pair running at Category 3 transmission levels.

Cabling from wall outlets will run in conduit to cable tray above accessible corridor ceiling.

Other wiring raceways to be dependent on structural floor system.

Telephone system will typically be used for station-to-station intercom system. Central paging system will not be provided.

Fire Alarm

The facility will be provided with an intelligent fire alarm and detection system to monitor: sprinkler water flow switches, duct-mounted smoke detectors, manual pull stations, and selective monitoring of critical areas. The more critical areas, such as cold rooms, freezers, computer rooms, etc., would have additional smoke and fire detection monitoring, utilizing applicable detection devices, such as ion and photoelectric smoke detectors, rate-of-rise heat detectors, incipient protection systems, etc. Devices would be located per NFPA life safety codes.

Central station monitoring of the system would report alarm by device address, giving the device type and its location within the building. Alarms could then be communicated to various annunciator panels located in the buildings, local fire brigades or stations and selected staff locations.

Evacuation of the building would be by a single tone and high intensity visual strobe type system, with horns designed and located to provide a sound output level 10 db above the ambient noise level, and strobes located within visual sight at any location.

Security

Access System:

The security access system will be capable of multiple levels of access to the site and facility. System would consist of front end microprocessor computer, personnel identification device, (such as photo ID card with magnetic stripe or proximity card), magnetic door locks, numeric keypads and/or biometrics identification devices.

Intrusion System:

A local intrusion alarm system will be provided monitoring all exterior doors, glass break detectors on windows, passive infra-red and/or ultrasonic devices in corridor spaces and selected room locations. Alarms would be annunciated at a protection and security office or guard station, and could be tied into surveillance cameras for time lapse recording. Alarms could also be sent to local police and/or staff locations.

CCTV:

A closed circuit television system will be provided to monitor critical selected areas within and around the facility for unauthorized personnel. Video output would be monitored by a security guard and recorded on time lapse recorders which could monitor continuously or be triggered by the security intrusion system. Monitoring and control of the cameras would be done remotely via a communication link from the protection and security office either on-site or off-site.

Building Automation/Control

We recommend that the control systems be kept simple to reduce skill level required for routine maintenance. Due to lack of local technical support for higher level systems, pneumatic controls will be utilized for building systems wherever possible. Single, stand-alone loop controllers and PLC's will be used for process control where appropriate. Options considered for building systems included electronic or direct digital controls (DDC).

.51

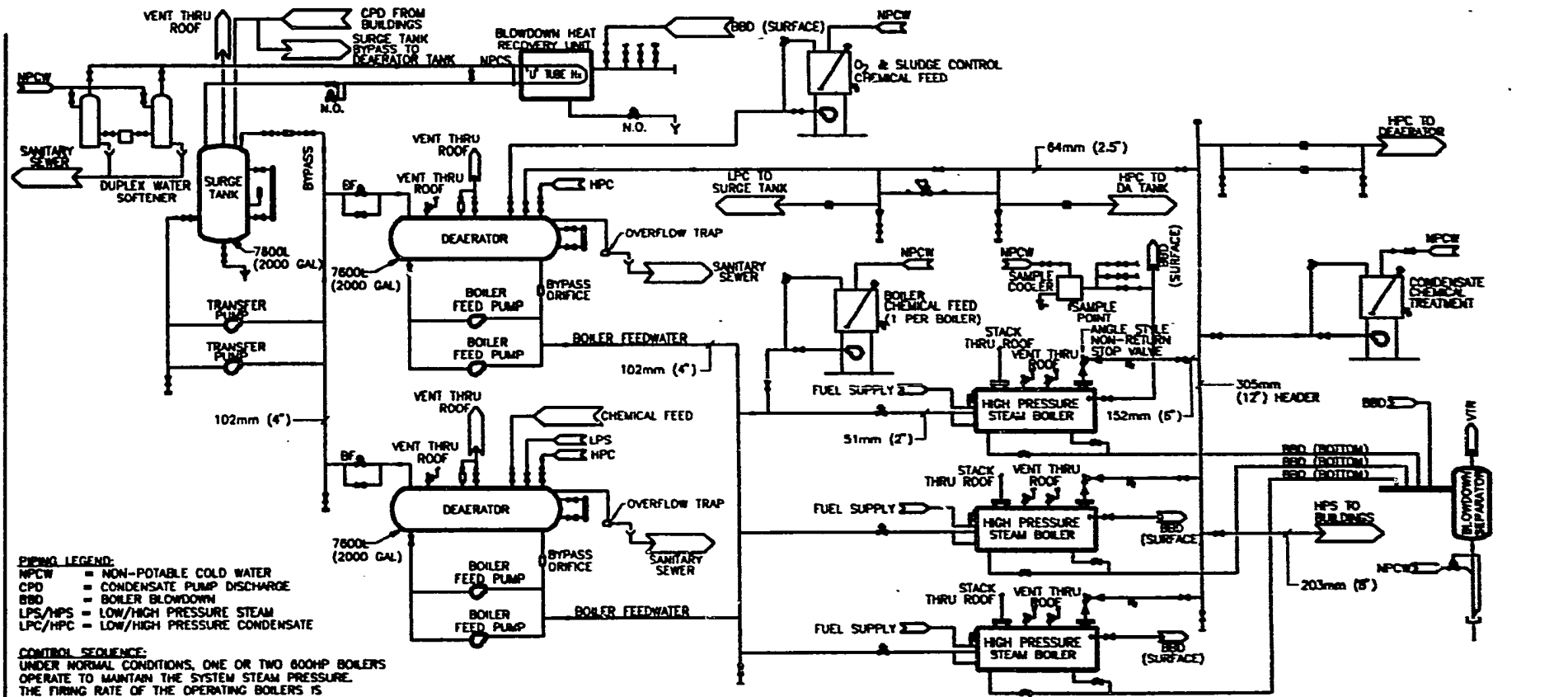

PIPING LEGEND:
NPCW = NON-POTABLE COLD WATER
CPD = CONDENSATE PUMP DISCHARGE
BBD = BOILER BLOWDOWN
LPS/HPS = LOW/HIGH PRESSURE STEAM
LPC/HPC = LOW/HIGH PRESSURE CONDENSATE

CONTROL SEQUENCE:
UNDER NORMAL CONDITIONS, ONE OR TWO 600HP BOILERS OPERATE TO MAINTAIN THE SYSTEM STEAM PRESSURE. THE FIRING RATE OF THE OPERATING BOILERS IS MODULATED TO MAINTAIN THE DESIRED SYSTEM PRESSURE. UPON FAILURE OF ONE BOILER, THE STANDBY 600HP BOILER SHALL BE STARTED.

DURING SUMMER CONDITIONS, ONE BOILER IS OPERATED TO SATISFY REHEAT AND PROCESS LOADS.

THE TRANSFER PUMPS ARE SEQUENCED TO MAINTAIN DEAERATOR WATER LEVEL. THE BOILER FEED PUMPS ARE SEQUENCED BASED ON THE NUMBER OF BOILERS OPERATING TO MAINTAIN THE FEEDWATER PRESSURE. EACH INDIVIDUAL BOILER HAS A SEPARATE LEVEL CONTROL AND MODULATING FEED WATER VALVE.

ALTERNATE SYSTEMS CONSIDERED:
CENTRAL STEAM FROM EXISTING UTILITY PLANTS MAY BE CONSIDERED IF CAPACITY AND PRESSURE ARE AVAILABLE

FIRE TUBE AND WATER TUBE BOILERS WERE CONSIDERED. FIRE TUBE BOILERS WERE SELECTED DUE TO THEIR LOWER FIRST COST AND BETTER OPERATING EFFICIENCY.

DESIGN CRITERIA:
SYSTEM SERVES ALL BUILDING HEATING, REHEAT, HUMIDIFICATION AND PROCESS LOADS.
SYSTEM IS DESIGNED TO PROVIDE 8.6 BAR (125 PRESSURE. SUFFICIENT CAPACITY WILL BE PROVIDED TO MEET THE PEAK LOAD IN THE EVE A FAILURE OF THE LARGEST SYSTEM COMPONEN HOWEVER, REDUCED DEAERATION CAPACITY MAY EXIST ULTIMATELY IF A DEAERATOR FAILS.
BOILERS UTILIZE DUAL FUEL BURNERS, FUEL OIL AND NATURAL GAS. CONTINUOUS SURFACE BLOWDOWN WITH HEAT RECOVERY IS UTILIZED.
ALL STEAM PIPING IS STANDARD WEIGHT BLACK STEEL. ALL CONDENSATE PIPING IS ASTM SCHEDULE 80 BLACK STEEL. BOTH SYSTEMS UTILIZE BUTT WELDED FITTINGS AND FORGED STEEL SCREWED FITTINGS.

STEAM AND CONDENSATE SYSTEM FLOW DIAGRAM

AEI

LEDERLE-PRAXIS BIOLOGICALS
NIS VACCINE PRODUCTION FACILITY

CENTRAL UTILITY PLANT - STEAM & CONDENSATE-

P1.1

152

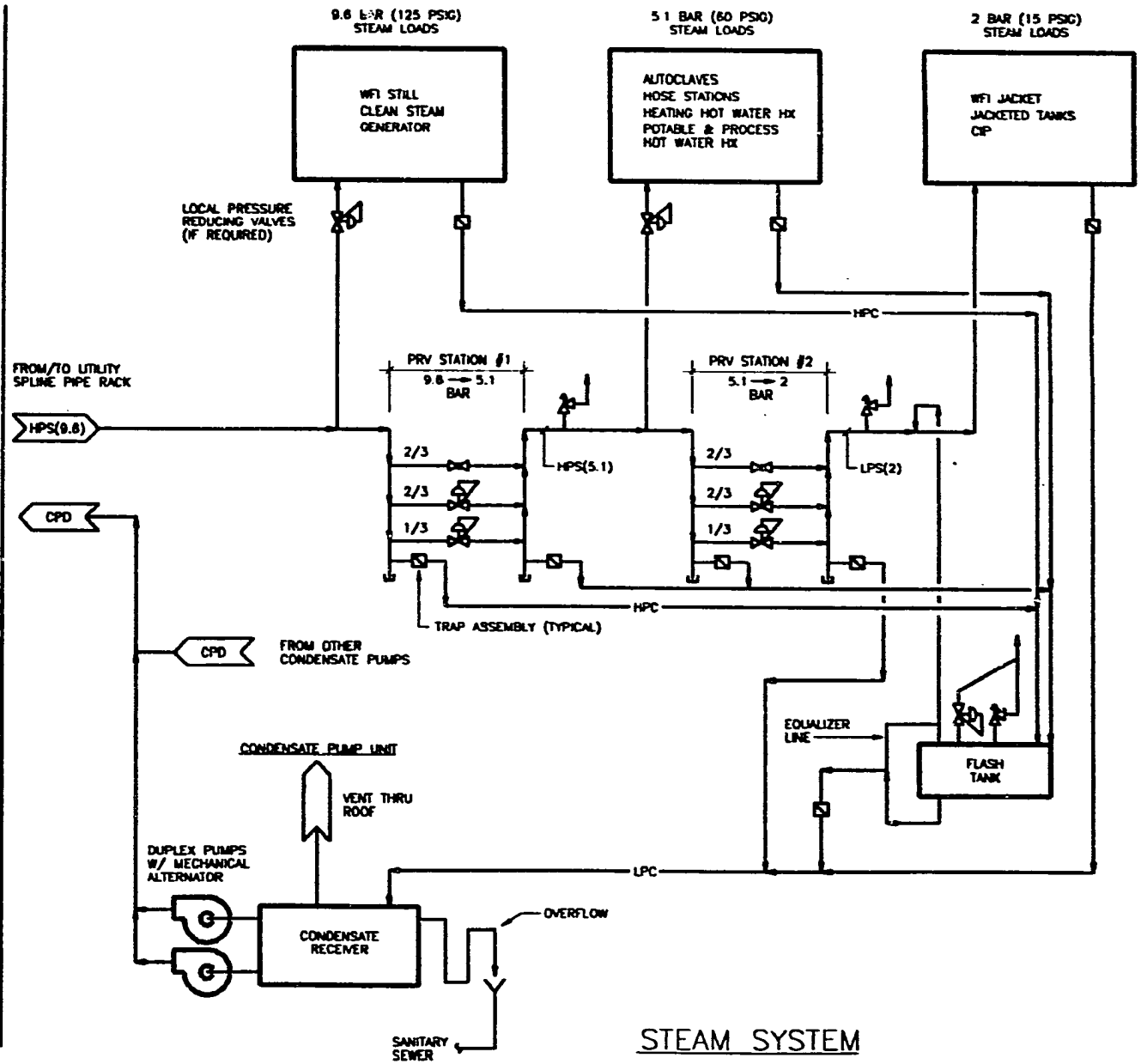

STEAM SYSTEM

ABBREVIATIONS

HPS(xx) = HIGH PRESSURE STEAM AT xx BAR PRESSURE
HPC = HIGH PRESSURE CONDENSATE
LPS = LOW PRESSURE STEAM
LPC = LOW PRESSURE CONDENSATE
CPD = CONDENSATE PUMP DISCHARGE
HX = HEAT EXCHANGER
PRV = PRESSURE REDUCING VALVE

DESIGN CRITERIA

HIGH PRESSURE STEAM PIPING:
- SIZED AT 20% PRESSURE LOSS OR 51 M/S (10,000 FPM) MAX.
- EXTRA STRONG BLACK PIPE WITH EXTRA STRONG CLASS 150 WELD FITTINGS

LOW PRESSURE STEAM PIPING:
- SIZED AT 3# LOSS OR 51 M/S (10,000 FPM) MAX.
- STANDARD WT. BLACK PIPE. 2 1/2" AND OVER = CLASS 150 WELD FITTINGS, 2" AND UNDER = CLASS 125 SCREWED FITTINGS

CONDENSATE AND CONDENSATE PUMP DISCHARGE PIPING:
- STANDARD WT. BLACK PIPE
- 2 1/2" AND OVER = EXTRA STRONG WELD FITTINGS
- 2" AND UNDER = CLASS 125 C.I. SCREWED FITTINGS

PRV STATIONS:
- VALVES TO BE SIZED FOR 1/3 AND 2/3 CAPACITY
- BYPASS SIZED FOR 2/3 CAPACITY
- SAFETY VALVE SIZED FOR LARGEST PRV VALVE
- PRV STATIONS LOCATED IN
  1) CIP (7700KG/HR, 1700#/hr)
  2) PRODUCTION (6400KG/HR, 1400#/hr)
  3) QC/WAREHOUSE (4100KG/HR, 900#/hr)

AEI

LEDERLE-PRAXIS BIOLOGICA
NIS VACCINE PRODUCTION FAC

BUILDING – STEAM
FLOW DIAGRAM

153

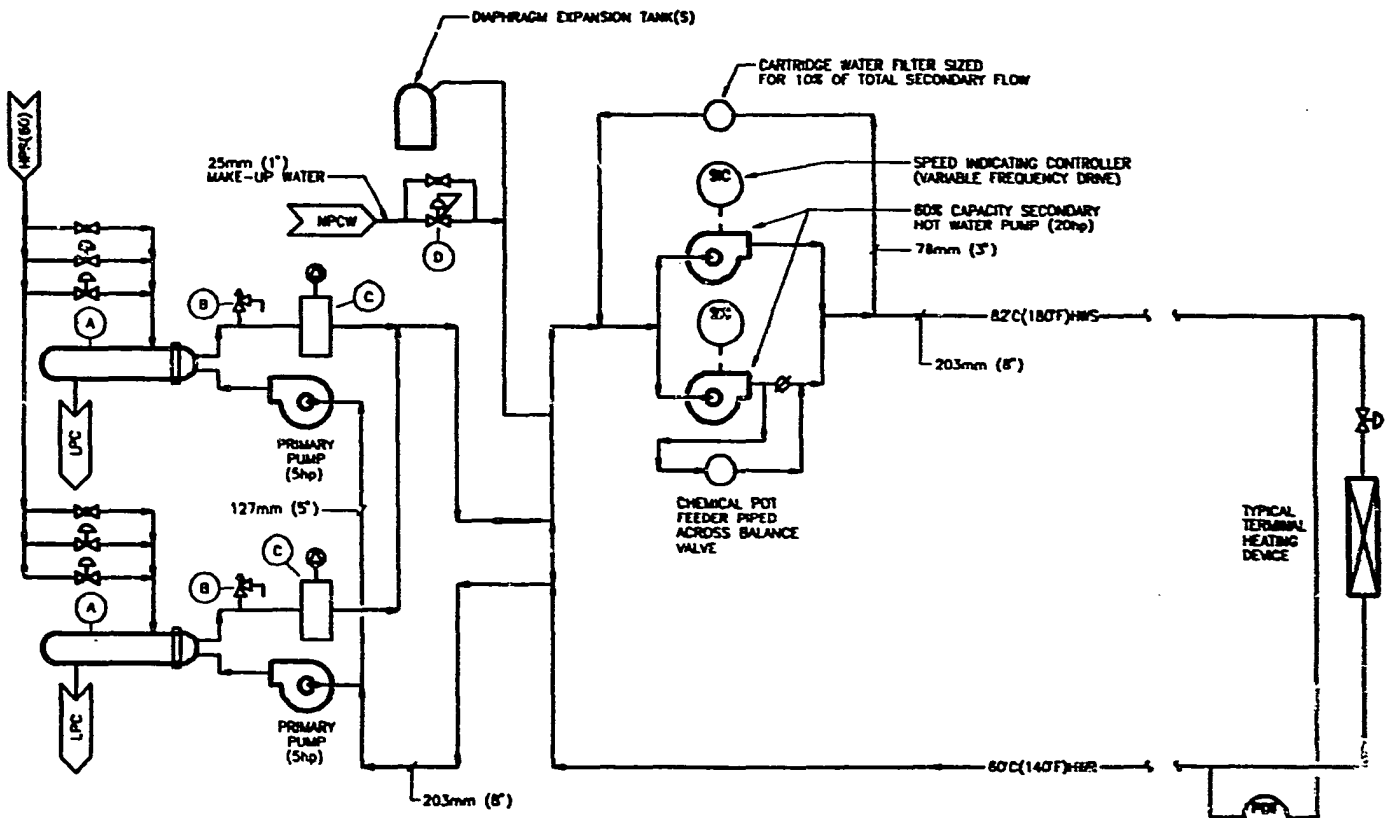

(A) = STEAM TO HOT WATER CONVERTOR (HEAT EXCHANGER) SIZED FOR 60% TOTAL CAPACITY 8968 MILLION JOULES/HOUR (8500 MBH) EACH

(B) = PRESSURE RELIEF VALVE

(C) = CENTRIFUGAL TYPE AIR SEPARATOR WITH AUTOMATIC AIR VENT

(D) = WATER PRESSURE CONTROL VALVE

HPS(60) = HIGH PRESSURE STEAM AT 5.1 BAR (80 PSIG)
LPC = LOW PRESSURE CONDENSATE
HWS = HOT WATER SUPPLY
HWR = HOT WATER RETURN
NPCW = NON POTABLE COLD WATER

DESIGN CRITERIA

HEATING HOT WATER WILL BE USED AS HEAT TRANSFER MEDIA FOR REHEAT COILS, AND OTHER TERMINAL HEATING EQUIPMENT. HEATING HOT WATER WILL BE GENERATED AT CENTRAL UTILITY PLANT FOR ALL BUILDINGS BY TWO STEAM-TO-WATER CONVERTORS (SHELL AND TUBE HEAT EXCHANGERS).

TERMINAL HOT WATER HEATING DEVICES WILL BE SIZ FOR 82°C (180°F) ENTERING WATER TEMPERTURE 11°-22°C (20°-40°F) TEMPERATURE DROP. CONVERTORS AND PUMPS WILL OPERATE IN PAR EACH WILL BE SIZED FOR 60% OF CURRENT CA ALLOWING FOR 20% GROWTH OF HOT WATER HE HOT WATER PIPING WILL BE SIZED FOR 0.3-3 1 (1-10 FPS) WITH A 75%/25% PRESSURE SPLIT MAINS AND BRANCH CIRCUITS.

CONTROL SEQUENCE

STEAM CONTROL VALVES, SIZED FOR 2/3 AND 1/3 CAPACITY, WILL BE MODULATED AT CONVERTORS TO MAINTAIN A CONSTANT LEAVING WATER TEMPERATURE AT EACH CONVERTOR. A HIGH AT EACH CONVERTOR WILL CLOS LEAVING HOT WATER TEMPERATU PRIMARY PUMPS WILL BE MANUA ON/OFF. SECONDARY PUMPS W SECONDARY PUMP SPEED WILL BE MOD MAINTAIN MINIMUM PRESSURE AT POI CONTROL VALVES WILL BE MODULATING TO MAINTAIN SETPOINT.

ALTERNATIVE SYSTEMS CONSIDERED

SYSTEMS CONSIDERED WERE LOW PRESSURE STEAM HEATING HOT WATER. WE STRONGLY RECOMMEND TH OF HEATING HOT WATER FOR REHEAT COILS AND TE HEATING DUE TO HIGHER DEGREE OF CONTROLLABIL AND LOWER MAINTENANCE COSTS.
STEAM COILS WITH FACE AND BYPASS DAMPERS WILL USED FOR AIR HANDLING UNIT HEATING COILS.

BUILDING HEATING HOT WATER SYSTEM

AEI

LEDERLE-PRAXIS BIOLOGICA
NIS VACCINE PRODUCTION FAC

BUILDING HEATING
HOT WATER FLOW DIAGRAM

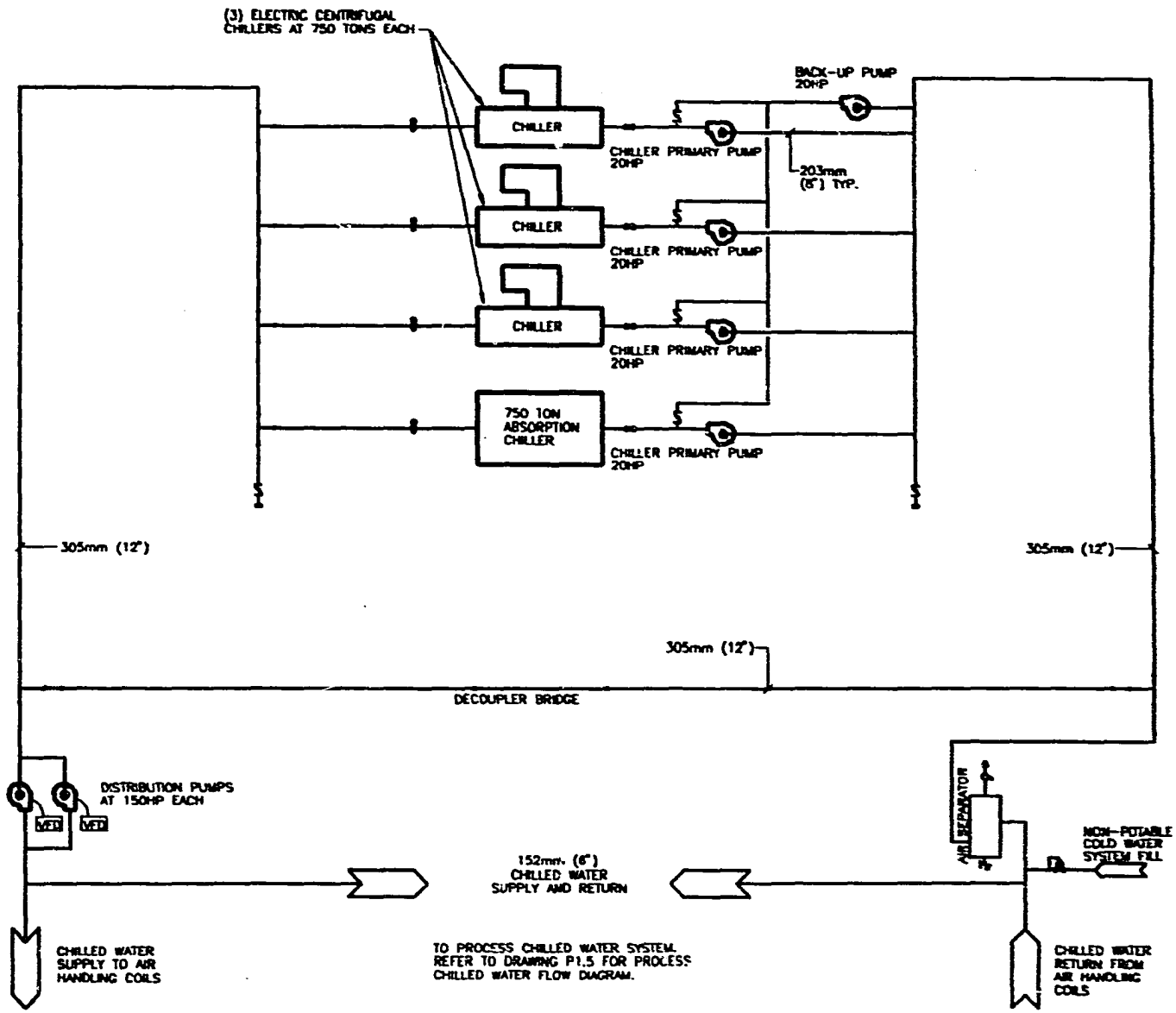

CHILLED WATER SYSTEM FLOW DIAGRAM

DESIGN CRITERIA

SYSTEM SERVES ALL HVAC LOADS.

SYSTEM IS DESIGNED AS CONSTANT FLOW PRIMARY LOOP AND VARIABLE FLOW DISTRIBUTION LOOP.

SUFFICIENT CAPACITY WILL BE PROVIDED TO MEET PEAK LOAD IN THE EVENT OF FAILURE OF THE LARGEST UNIT.

WATER FLOWS BASED ON 5.6°C (42°F) SUPPLY TEMPERATURE, 13.3°C (56°F) RETURN TEMPERATURE.

ALL PIPING IS STANDARD WEIGHT, BLACK STEEL WITH WELDED FITTINGS COVERED WITH 51mm FIBERGLASS INSULATION AND CANVAS JACKET.

CONTROL SEQUENCE

UNDER NORMAL OPERATION, UP TO THREE CHILLERS, TO MAINTAIN CHILLED WATER SUPPLY TEMPERATURE, WILL BE SEQUENCED BASED ON LOAD. ONE CHILLER IS STANDBY.

THE CHILLER PRIMARY PUMP OPERATES ONLY WHEN ITS RESPECTIVE CHILLER OPERATES. A STANDBY PUMP IS PROVIDED IN THE EVENT OF A PUMP FAILURE.

ONE DISTRIBUTION PUMP WILL OPERATE CONTINUOUSLY, WITH SPEED VARIED TO MAINTAIN PROPER PRESSURE DIFFERENTIAL AT VARIOUS BUILDINGS. IF PUMP FAILS, BACK-UP PUMP SHALL START.

ALTERNATE SYSTEMS CONSIDERED

THREE CHILLER TYPES WERE CONSIDERED: ELECTRIC CENTRIFUGAL, STEAM ABSORPTION AND DIRECT FIRED GAS ABSORPTION.

ONE STEAM ABSORPTION CHILLER WAS USED FOR EMERGENCY STANDBY FOR VIVARIUM AND OTHER CRITICAL LOADS.

AEI

LEDERLE-PRAXIS BIOLOGICALS
NIS VACCINE PRODUCTION FACILITY

CENTRAL UTILITY PLANT-
CHILLED WATER

P1.4

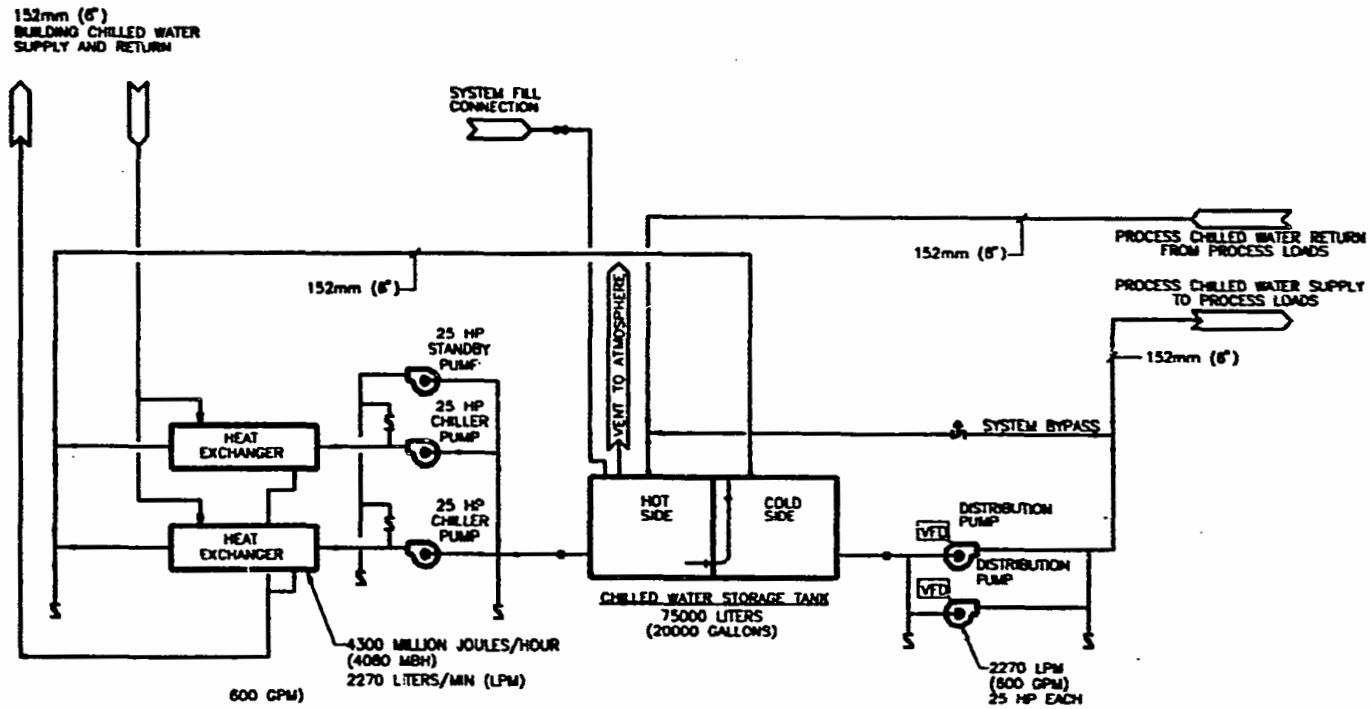

PROCESS CHILLED WATER SYSTEM FLOW DIAGRAM

DESIGN CRITERIA

SYSTEM SERVES ALL PROCESS LOADS AND CONTAINS TREATED WATER.

SYSTEM IS DESIGNED AS CONSTANT FLOW PRIMARY LOOP AND VARIABLE FLOW DISTRIBUTION LOOP.

SUFFICIENT CAPACITY WILL BE PROVIDED TO MEET THE LOAD IN THE EVENT OF FAILURE OF THE LARGEST U

FLOWS BASED ON 7C (45F) SUPPLY TEMPERATURE.

ALL PIPING IS STANDARD WEIGHT BLACK STEEL WITH WELDED FITTINGS COVERED WITH 51mm FIBERGLASS INSULATION AND CANVAS JACKET.

CONTROL SEQUENCE

UNDER NORMAL OPERATION, ONE HEAT EXCHANGER TO MAINTAIN THE PROCESS CHILLED WATER SUPPLY TEMPERATURE. THE OTHER CHILLER IS STANDBY.

ONE DISTRIBUTION PUMP WILL OPERATE CONTINUOUSLY, WITH ITS SPEED VARIED TO MAINTAIN PROPER PRESSURE DIFFERENTIAL AT VARIOUS BUILDINGS. IF PUMP FAILS, BACK-UP PUMP STARTS.

AEI

LEDERLE-PRAXIS BIOLOGICALS
NIS VACCINE PRODUCTION FACILITY

PROCESS CHILLED WATER
SYSTEM FLOW DIAGRAM

P1.5

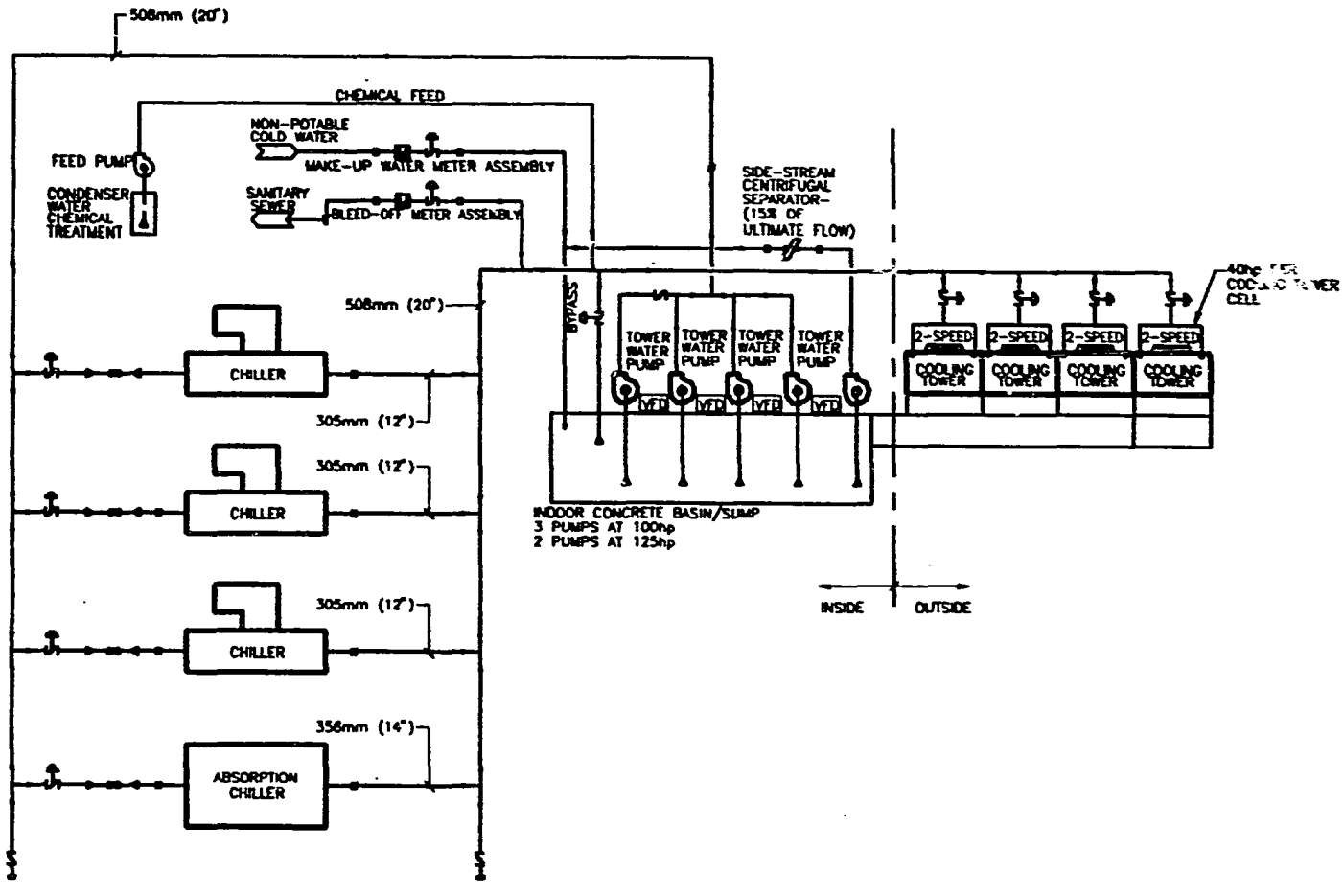

TOWER WATER FLOW DIAGRAM

DESIGN CRITERIA

SYSTEM SERVES ALL CHILLERS AND THE AIR COMPRESSOR COOLING CIRCUIT.

SYSTEM IS DESIGNED TO COOL WATER FROM 35°C (95°F) TO 29.4°C (85°F) AT 21.1°C (70°F) AMBIENT WET BULB.

SUFFICIENT CAPACITY WILL BE PROVIDED TO MEET THE PEAK LOAD IN THE EVENT OF FAILURE OF THE LARGEST COMPONENT. HOWEVER, REDUCED FLOW OR HIGHER TEMPERATURES MAY RESULT UNDER THESE CONDITIONS.

INDIVIDUAL CHILLER FLOWS ARE CONSTANT VOLUME. OVERALL SYSTEM FLOW IS VARIABLE VOLUME.

ALL PIPING IS STANDARD WEIGHT, BLACK STEEL WITH BUTT WELDED FITTINGS.

EXTERIOR PIPING TO DRAIN TO CONCRETE SUMP WHEN PUMPS ARE OFF.

CONTROL SEQUENCE

UNDER NORMAL CONDITIONS, ONE TOWER PUMP PER CHILLER OPERATE TO MAINTAIN DESIRED SYSTEM FLOW. IF ONE PUMP FAILS, BACKUP PUMP STARTS.

TOWER PUMP SPEED IS VARIED TO MAINTAIN DESIRED DIFFERENTIAL PRESSURE AT CHILLERS. INDIVIDUAL CHILLER FLOW IS MAINTAINED BY FLOW METER AND CONTROL VALVE AT EACH CHILLER.

COOLING TOWER CELLS ARE SEQUENCED ON/OFF BASED ON SYSTEM FLOW REQUIREMENTS. TOWER FANS ARE CYCLED ON LOW-HIGH SPEED TO MAINTAIN SUMP TEMPERATURE.

FILTER PUMP OPERATES CONTINUOUSLY TO MAINTAIN SYSTEM WATER QUALITY. TOWER BLEED VALVE IS CONTROLLED TO MAINTAIN WATER SYSTEM CONDUCTIVITY. TOWER MAKE-UP VALVE IS CONTROLLED TO MAINTAIN WATER LEVEL IN SUMP. TOWER CHEMICAL FEED IS CONTROLLED BASED ON MAKE-UP WATER QUANTITY.

ALTERNATE SYSTEMS CONSIDERED

FOUR COOLING TOWER TYPES WERE CONSIDERED AS LISTED BELOW:
1. FIELD ERECTED COUNTERFLOW - FIBERGLASS
2. FIELD ERECTED COUNTERFLOW - WOOD
3. FIELD ERECTED CROSSFLOW - WOOD
4. PACKAGED CROSSFLOW - STEEL

THE FIELD ERECTED COUNTERFLOW TOWER WITH FIBERGLASS STRUCTURE WAS SELECTED DUE TO ITS HIGHER RELIABILITY.

AEI

LEDERLE-PRAXIS BIOLOGICA
NIS VACCINE PRODUCTION FAC

TOWER WATER FLOW DIAGRAM

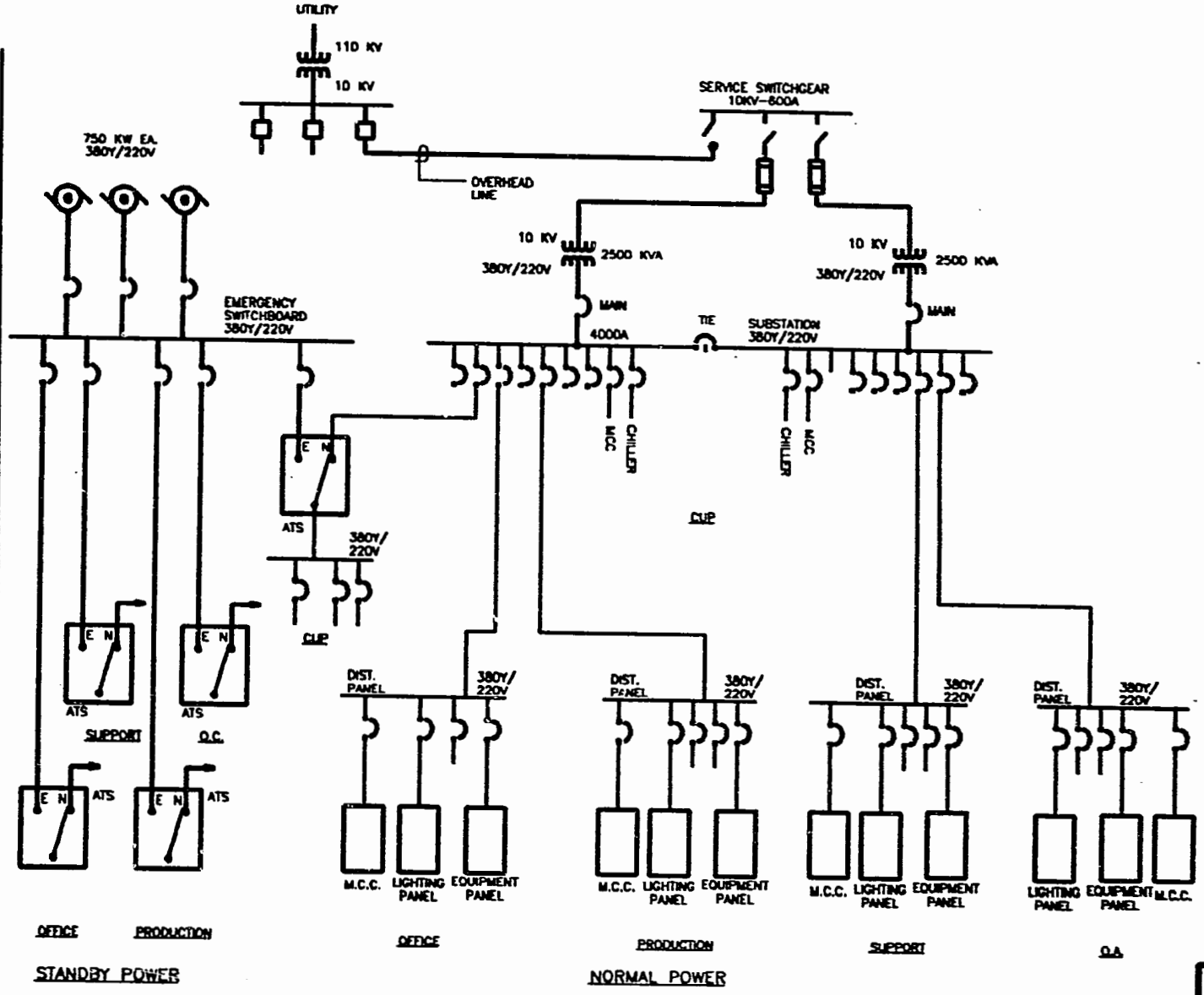

ONE-LINE POWER DIAGRAM

N.T.S.

DESCRIPTION

NORMAL ELECTRICAL SERVICE IS OBTAINED FROM TWO UTILITY FEEDERS SUPPLYING POWER TO A DOUBLE-ENDED UNIT SUBSTATION CONSISTING OF TWO TRANSFORMERS AND A DOUBLE-ENDED SWITCHBOARD WITH A NORMALLY OPEN TIE BREAKER.

EMERGENCY STANDBY POWER OBTAINED FROM A 380Y/22 GENERATOR THAT SERVES AS THE EMERGENCY SOURCE TO AN AUTOMATIC TRANSFER SWITCH (ATS) WHICH IN TURN FEEDS A 380Y/220V EMERGENCY SWITCHBOARD. THE SWITCHBOARD'S NORMAL SOURCE WILL BE FROM THE BUILDING'S MAIN DISTRIBUTION SWITCHBOARD.

OPERATION

UNDER NORMAL CONDITIONS, THE SUBSTATION OPERATES WITH THE TWO SECONDARY MAIN BREAKERS CLOSED, THE TIE BREAKER OPEN, AND THE AUTOMATIC TRANSFER SWIT (ATS) IN THE NORMAL POSITION.

IF ONE SOURCE IS LOST, THE MAIN BREAKER ASSOCIATE WITH THAT SOURCE WILL OPEN, AND THE TIE BREAKER WILL CLOSE. ALL LOAD WILL THEN BE SERVED BY THE REMAINING SOURCE.

UPON LOSS OF BOTH SOURCES, THE ATS WILL START SIGNAL TO THE STANDBY GENERATION CO PANEL IN THE CENTRAL UTILITY PLANT. WHEN TH EMERGENCY SOURCE BECOMES AVAILABLE, THE A TRANSFERS TO THE EMERGENCY SOURCE. NORMA OPERATION WILL RESUME UPON RESTORATION OF POWER SOURCE(S).

DESIGN CRITERIA

1. UNIT SUBSTATION TRANSFORMERS NORMALLY TO HANDLE 75% OF TOTAL LOAD.
2. PANELBOARDS TO BE MOUNTED IN INTERSTITIAL SPACES.
3. TYPICALLY ONE POWER DISTRIBUTION PANEL PANEL, MCC ETC. PER BUILDING AREA.
4. LOAD CRITERIA:

LIGHTING	25 W/M2
GENERAL POWER	10 W/M2
HVAC	250 W/M2
PROD. EQUIP.	100 W/M2
LAB POWER	150 W/M2
SUPPORT	50 W/M2

AEI

LEDERLE-PRAXIS BIOLOGICALS
NIS VACCINE PRODUCTION FACILITY

ELECTRICAL POWER - NORMAL/STANDBY

NO. E1.1

158

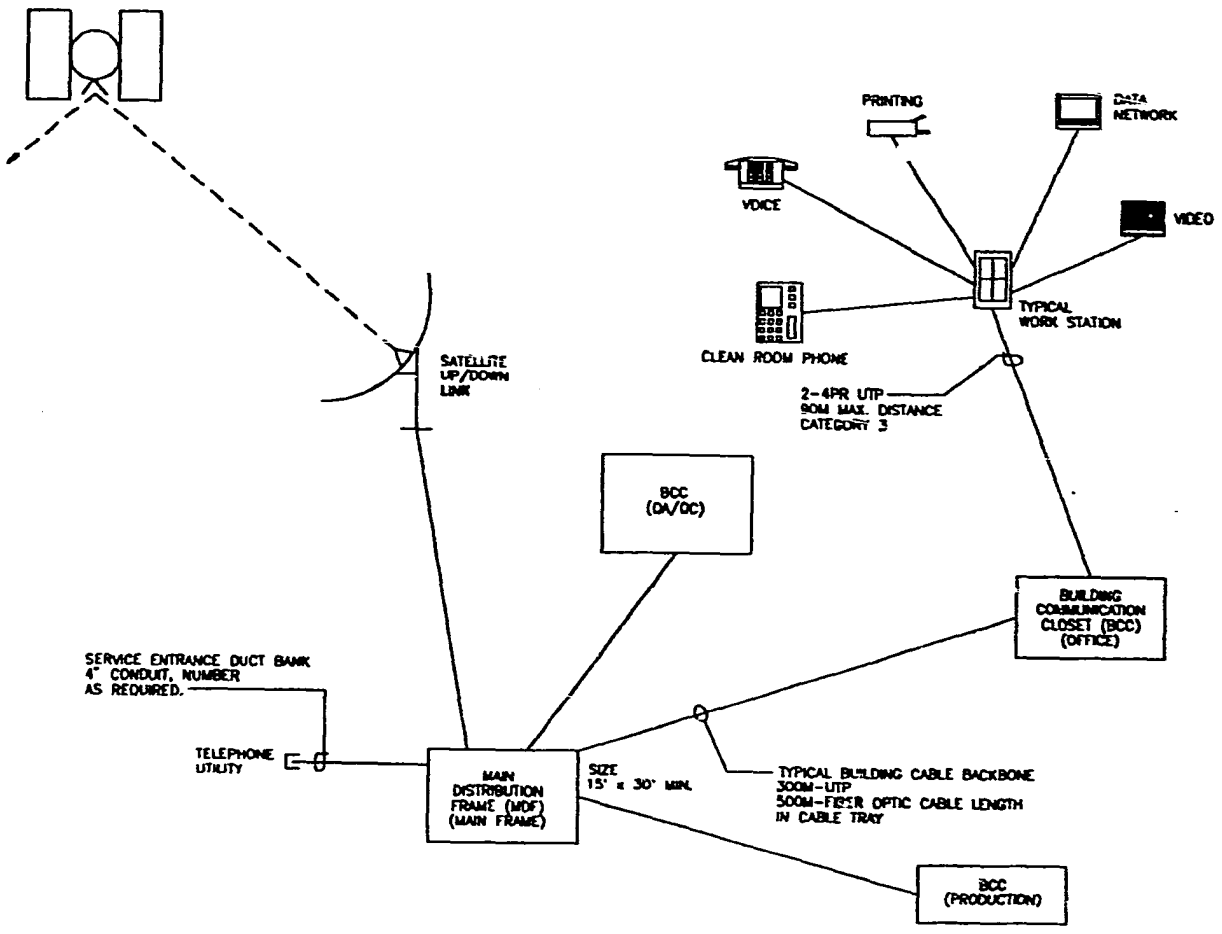

DATA/VOICE COMMUNICATIONS SYSTEM DIAGRAM

N.T.S.

SYSTEMS DESCRIPTION

THE MAIN DISTRIBUTION FRAME (MDF) WILL BE LOCATED AT THE TELEPHONE UTILITY ENTRANCE. ALL UTILITY ENTRANCE CABLE AND SITE BACKBONE CABLE SHALL TERMINATE IN THIS ROOM. THIS ROOM TO HOUSE THE SITE TELEPHONE SWITCH EQUIPMENT, DATA NETWORK MAIN EQUIPMENT, TERMINAL BLOCKS, AND BE DEDICATED TO DATA/VOICE EQUIPMENT.

A CABLE TRAY DISTRIBUTION SYSTEM WILL EMANATE FROM THE MDF AND TRAVEL THROUGH THE CORRIDORS. THIS CABLE TRAY SHALL BE USED TO DISTRIBUTE CABLE TO ALL BUILDING COMMUNICATION CLOSETS (CBCC).

SATELLITE COMMUNICATIONS TO PROVIDE VOICE/DATA/VIDEO LINK TO U.S.A. OFFICES. (APPROX. COST $500,000 PLUS SATELLITE TIME)

TELEPHONE IN "CLEAN ROOMS" TO BE FLUSH MOUNTED "HANDS FREE" TYPE. UNIT TO HAVE MEMBRANE FACE KEYPAD AND SPEAKER, AND SOFTWARE DRIVEN FEATURES SUCH AS: HANDS FREE AUTO-ANSWER, PREPROGRAMMED AUTODIAL AND PBX FEATURES. (CM-TRONICS MODEL 295

AEI	
LEDERLE-PRAXIS BIOLOGICALS NIS VACCINE PRODUCTION FACILITY	
DATA/VOICE COMMUNICATION SYSTEM DIAGRAM	NO. E1.2

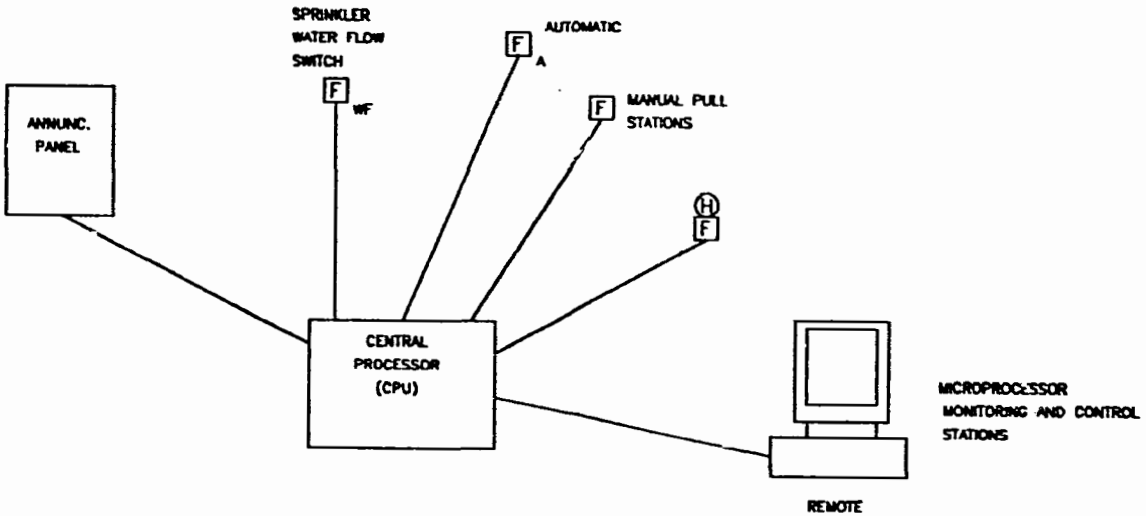

FIRE ALARM SYSTEM
N.T.S.

SYSTEM DESCRIPTION

FIRE ALARM SYSTEM TO BE MULTIPLEX TYPE SYSTEM. SYSTEM TO REPORT ALARM BY DEVICE ADDRESS, [illegible] DEVICE TYPE AND LOCATION IN BUILDING.

AUTOMATIC INITIATION DEVICES TO INCLUDE ION & PHOTOELECTRIC SMOKE DETECTORS, RATE OF RISE DETECTORS, AND INCIPIENT DETECTION SYSTEMS AS APPROPRIATE. DEVICES TO BE LOCATED PER NFPA DETECTION CODES.

EVACUATION OF BUILDING TO BE BY SINGLE TONE HIGH INTENSITY VISUAL STROBE TYPE SYSTEM, [illegible] LOCATED TO PROVIDE SOUND OUTPUT LEVEL 10 [illegible] THE AMBIENT NOISE LEVEL AND STROBES LOCATED VISUAL SIGHT AT ANY LOCATION.

AEI

LEDERLE-PRAXIS BIOLOGICALS
NIS VACCINE PRODUCTION FACILITY

FIRE ALARM SYSTEM DIAGRAM

NO. E1.3

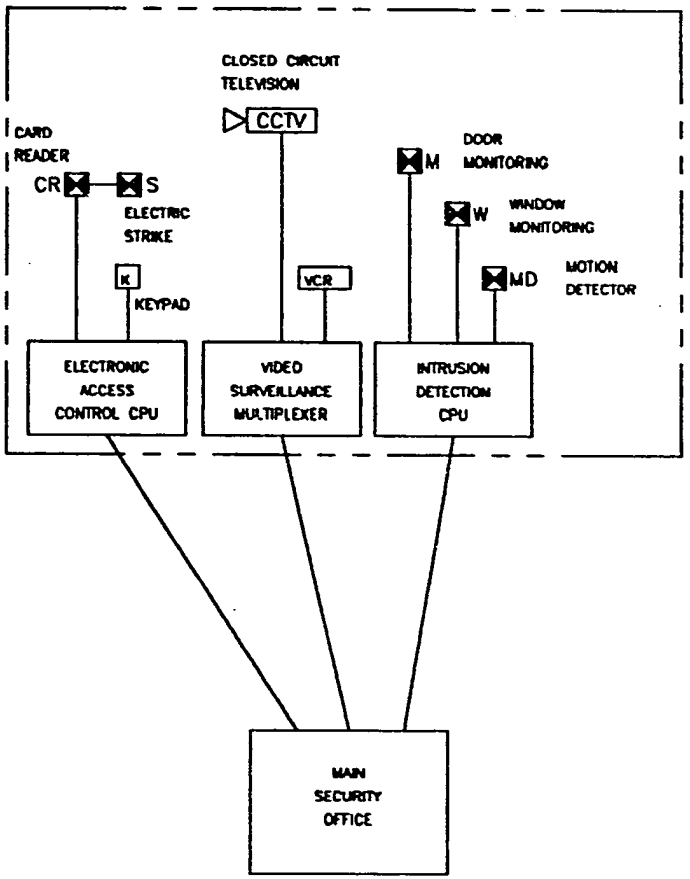

SECURITY SYSTEM DIAGRAM

N.T.S.

DESCRIPTION

1.) INTRUSION DETECTION
A CENTRAL PROCESSING UNIT (CPU) LOCATED IN THE SECURITY OFFICE TO MONITOR ALL DEVICES AND SUPERVISE SYSTEM WIRING. A PERSONAL COMPUTER (PC) SHALL INTERFACE WITH THE CPU TO PROVIDE ANNUNCIATION OF ALL ALARMS, ALL OPERATION AND ALL ADMINISTRATION FUNCTIONS. THIS SYSTEM COULD BE INTEGRATED WITH FIRE ALARM.

2.) VIDEO SURVEILLANCE
CAMERAS TO MONITOR CRITICAL AREAS WITHIN AND AROUND FACILITY. VIDEO OUTPUT MONITORED BY SECURITY GUARD AND RECORDED ON TIME LAPSE VIDEO RECORDER. MONITORING AND CONTROL OF ALL CAMERAS AND MULTIPLEXERS TO BE LOCATED AT THE SECURITY OFFICE. CAMERAS & MONITORS COULD BE TRIGGERED BY INTRUSION SYSTEM.

3.) ELECTRONIC ACCESS CONTROL
ACCESS SYSTEM TO BE CAPABLE OF MULTIPLE LEVELS OF ACCESS TO SITE & FACILITY AREAS. SYSTEM TO INCLUDE MICROPROCESSOR COMPUTER, CARD READERS, KEYPADS AS APPROPRIATE.

AEI

LEDERLE-PRAXIS BIOLOGICA
NIS VACCINE PRODUCTION FAC

SECURITY
SYSTEM DIAGRAM

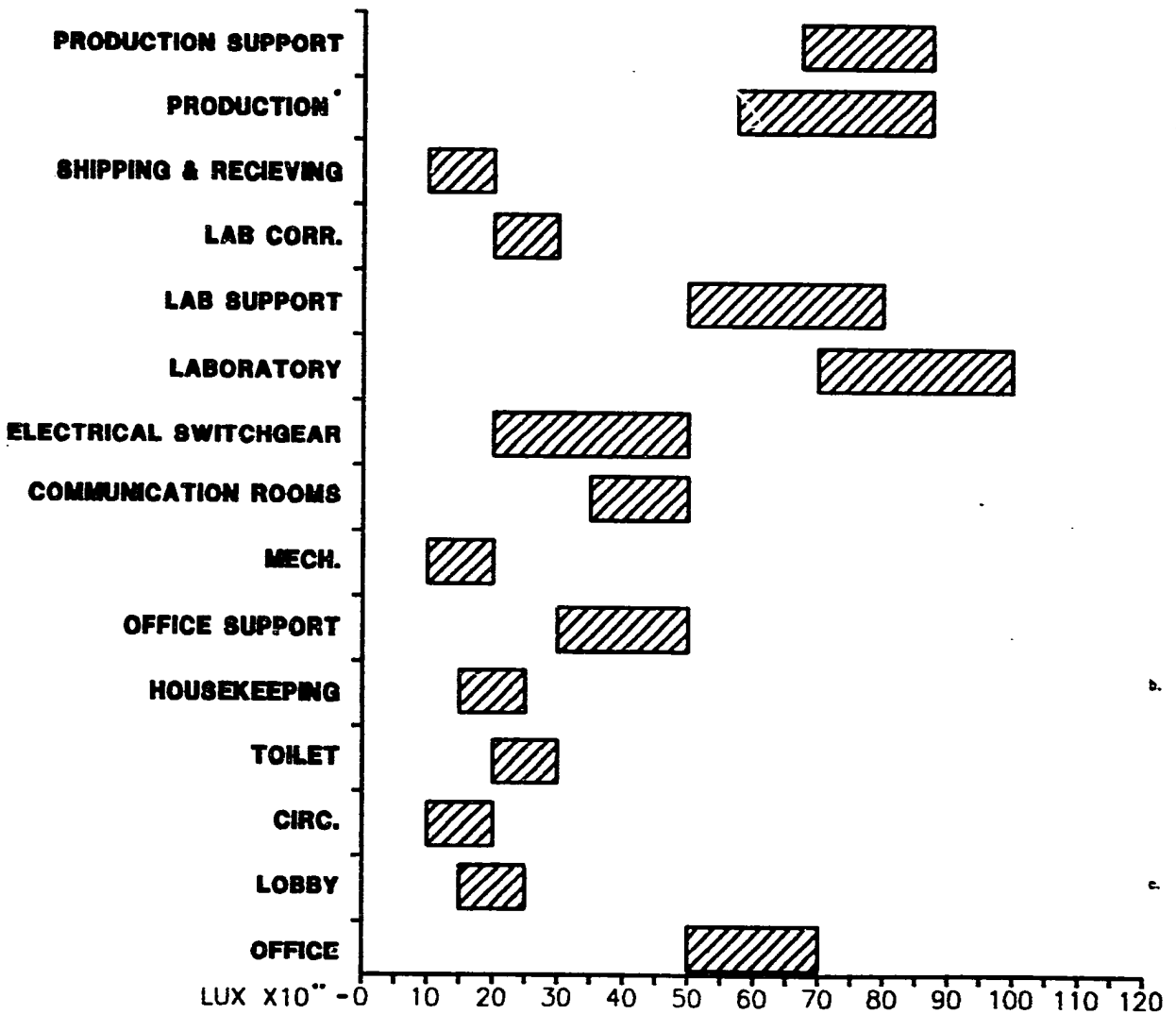

* PRODUCTION INCLUDES ALL CLEAN ROOMS CLASS 10,000, 100,000, ETC.

** LIGHT LEVEL IN LUX(CADELA/SQ. METER) TO BE MEASURED AT 750 MM ABOVE FLOOR.

LIGHT LEVEL DIAGRAM

1. LIGHTING

a. SYSTEM DESCRIPTION

FIXTURES

2, 3 OR 4 LAMP FLUORESCENT TROFFERS WITH DEEP CELL PARABOLIC LOUVERS TO BE USED IN THE FOLLOWING SPACES: OFFICE, LABORATORY, TECHNICAL AND SUPPORT LIGHTING. 2-LAMP PENDANT MOUNTED INDIRECT FLUORESCENT FIXTURES TO BE USED IN LARGE OPEN OFFICE AREA'S.

2, 3 OR 4 LAMP FLUORESCENT TROFFER WITH ENCLOSED AND GASKETED GLASS LENS, NON-CORROSIVE TRIM AND FRAME, RATED FOR ROOM ENVIRONMENT TO BE USED IN CLEAN ROOM CLASS 10,000, 100,000, AND WET LOCATION.

2 LAMP FLUORESCENT TROFFERS WITH K-12 ACRYLIC PRISMATIC LENS, ENCLOSED AND GASKETED TO BE USED IN THE FOLLOWING SPACES: GLASS WASH AND MISCELLANEOUS STORAGE AREA, DIRTY AND CLEAN CORRIDOR.

LOBBY, CIRCULATION SPACES AND TOILET LIGHTING TO BE MOST APPROPRIATE ARCHITECTURAL SELECTION WITH A COMBINATION OF FLUORESCENT AND INCANDESCENT FIXTURES. 2 LAMP SURFACE MOUNTED OPEN INDUSTRIAL FLUORESCENT FIXTURE TO BE USED in THE FOLLOWING SPACES: HOUSEKEEPING/STORAGE, COMMUNICATION ROOMS. 2 LAMP FLUORESCENT SURFACE OR PENDANT MOUNTED, OPEN INDUSTRIAL FIXTURES OR HID INDUSTRIAL FIXTURES IN HIGH BAY AREAS TO BE USED IN THE FOLLOWING SPACES: SHIPPING/ RECEIVING, MECHANICAL AND ELECTRICAL ROOMS.

CONTROL:

LIGHTING CONTROL TO BE LOW VOLTAGE TOGGLE SWITCH: LARGE OPEN OFFICES SHALL HAVE ROOM OCCUPANT SENSOR FOR OFF FUNCTION OF INDIVIDUAL AREAS. ROOM OCCUPANT SENSORS IN THE FOLLOWING AREAS: STORAGE, TOILETS, COPY ROOM, MAIL ROOM, ETC.,

IN ALL AREAS OF WET OR CORROSIVE ENVIROMENT TO BE WEATHER-PROOF, LOW VOLTAGE SWITCH.

IN GENERAL FLUORESCENT LAMPS SHALL BE T8,32 WATT 3500K. BALLAST SHALL BE ELECTRONIC TYPE. HID FIXTURE TO HAVE STANDARD LAMPS WITH H.P.F. BALLAST.

EMERGENCY OPERATION: SELECTED FIXTURES FOR EGRESS AND CRITICAL TASK AREAS TO BE ON EMERGENCY POWER

b. ALTERNATE LIGHTING SYSTEMS CONSIDERED:

RECESSED FLUORESCENT TROFFER WITH PARABOLIC LOUVERS VERSUS INDIRECT FLUORESCENT.

RECESSED FLUORESCENT TROFFER WITH ACRYLIC PRISMATIC LENS.

INDUSTRIAL FLUORESCENT

HIGH INTENSITY DISCHARGE INDUSTRIAL (METAL HALIDE, HIGH PRESSURE SODIUM).

EXIT LIGHT: LED TYPE FLUORESCENT AND SELF LUMINESCENT TYPE.

c. LIGHTING CONTROL

CONTACTOR/RELAY.

BUILDING MANAGEMENT SYSTEM CONTROL.

AEI

LEDERLE-PRAXIS BIOLOGICA
NIS VACCINE PRODUCTION FAC

LIGHT LEVEL DIAGRAM

OPV Batch, Fill and Packaging

- OPV Batching Air Flow Diagram M4.1
- OPV Fill Area Air Flow Diagram M4.2
- OPV Packaging Air Flow Diagram M4.3

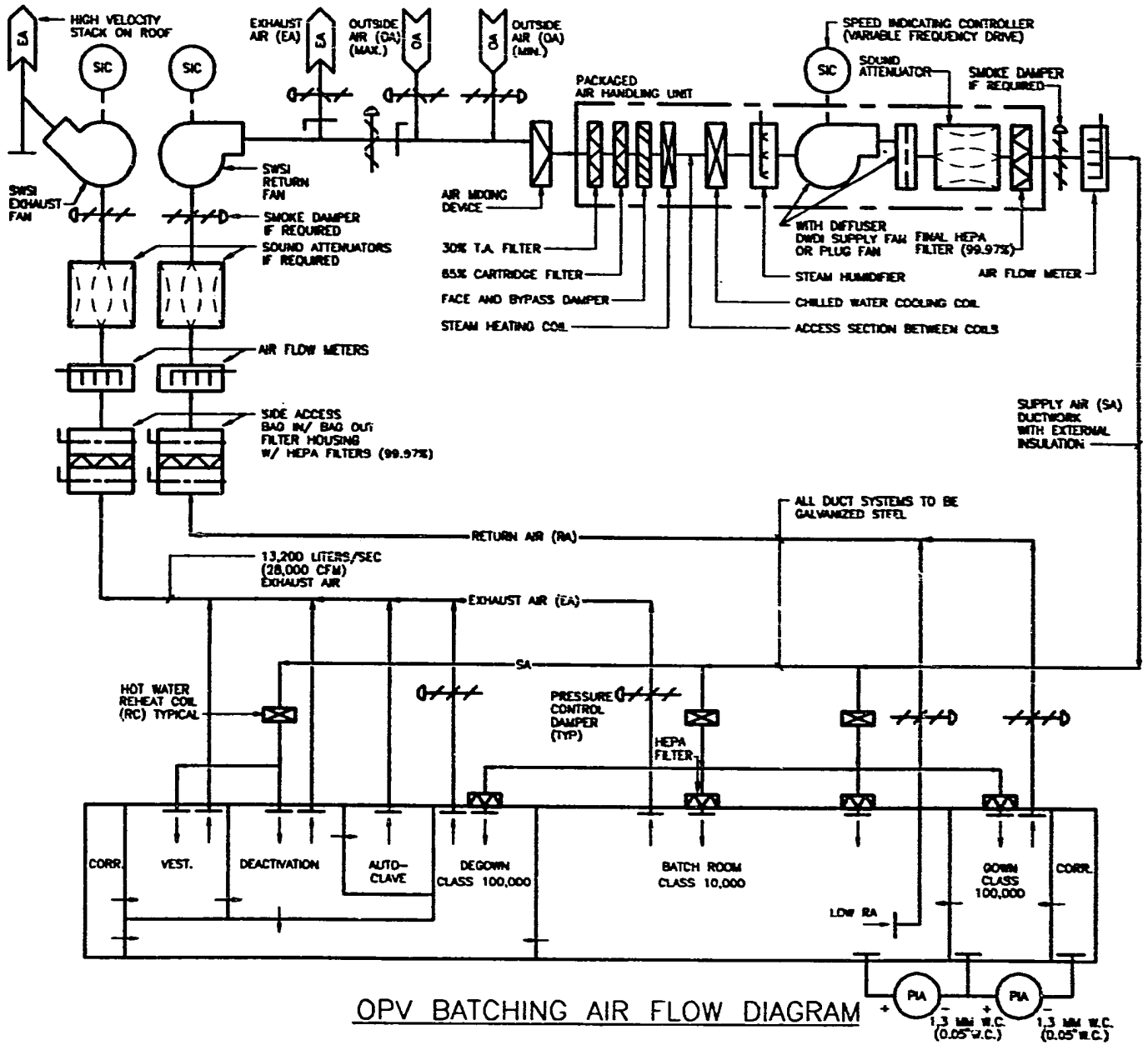

OPV BATCHING AIR FLOW DIAGRAM

DESIGN CRITERIA:

SPACE LOADS:
SPACE TEMP = 22°C ±2°C (72°F ±3°F)
SPACE HUMIDITY = 30% TO 50% RH
OUTSIDE WINTER = -28°C (-18°F)
OUTSIDE SUMMER = 29°C DB/20.6°C WB (84°F/68°F)

COIL LOADS:
OUTSIDE WINTER = -30°C (-22°F)
OUTSIDE SUMMER = 32°C DB/21°C WB (90°F/70°F)

AIR CHANGES PER HOUR:
BATCH AREA = 40 AC/HR
ALL OTHER SPACES = 30 AC/HR

TYPICAL OF ONE SYSTEM AT 38,200 LITERS/SEC. (81,000 CFM)

CONTROL SEQUENCE:

FANS RUN CONTINUOUSLY.
FAN SPEED IS MODULATED BY SIC TO MAINTAIN AIR FLOW AT AIR FLOW METERS.
HEATING AND COOLING COIL VALVES ARE MODU MAINTAIN CONSTANT DISCHARGE TEMPERATURE.
IF SPACE HUMIDITY IN RA DUCT RISES ABOVE AND UNIT IS IN COOLING MODE, COOLING COIL FULLY TO DEHUMIDIFY.
HUMIDIFIER STEAM VALVE IS MODULATED IN HE TO MAINTAIN MINIMUM SETPOINT.
DRY BULB ECONOMIZER MODULATES OA\RA\EA UNIT PROTECTED BY FREEZE STAT AND SMOKE

RETURN AND EXHAUST FLOWS WILL BE MODULU MAINTAIN 1.3 MM (0.05") WATER COLUMN PRE DIFFERENCE BETWEEN ROOM CLASSIFICATIONS. ROOMS WILL BE AT HIGHER PRESSURE.

AEI

LEDERLE-PRAXIS BIOLOGICALS
NIS VACCINE PRODUCTION FACILITY

OPV BATCHING AIR FLOW DIAGRAM

M4.1

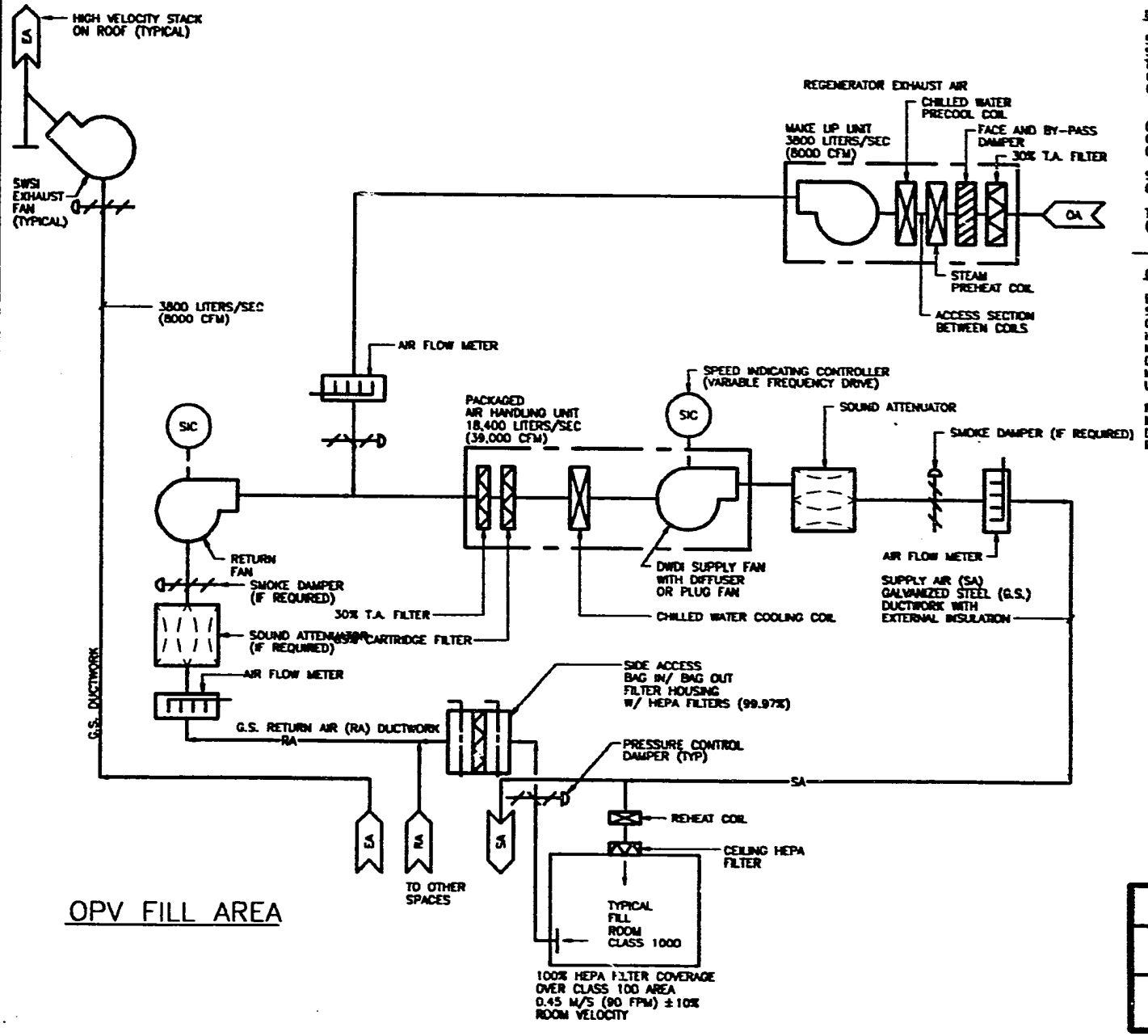

OPV FILL AREA

DESIGN CRITERIA:

SPACE LOADS:
SPACE TEMP = 20°C ±2°C (68°F ±3°F)
TYPICAL SPACE HUMIDITY = 30% TO 80% RH
OUTSIDE WINTER = -28°C (-19°F)
OUTSIDE SUMMER = 29°C DB/20.5°C WB (84°F DB/68°F WB

COIL LOADS:
OUTSIDE WINTER = -30°C (-22°F)
OUTSIDE SUMMER = 32°C DB/21°C WB (90°F DB/70°F

SPACES TO BE CLASS 1000 WITH CLASS 100 OVER FILL MACHINES

TYPICAL OF ONE SYSTEM AT 18,400 LITERS/SEC (39,000 CFM)

CONTROL SEQUENCE:

FANS RUN CONTINUOUSLY.
SUPPLY FAN SPEED IS MODULATED BY SIC TO MAINTAIN CONSTANT AIR FLOW AT AIR FLOW METERS.
HEATING AND COOLING COIL VALVES ARE MODULATED TO MAINTAIN CONSTANT DISCHARGE TEMPERATURE.
CONTROL LOOP WILL RESET CHILLED WATER VALVES TO MAINTAIN SETPOINT AT SPACE HUMIDISTAT.
UNIT PROTECTED BY FREEZE STAT AND SMOKE DETECTOR

RETURN AND EXHAUST FLOWS WILL BE MODULATED TO MAINTAIN 1.3 MM (0.05") WATER COLUMN PRESSURE DIFFERENCE BETWEEN ROOM CLASSIFICATIONS. CLEANER ROOMS WILL BE AT HIGHER PRESSURE.

AEI

LEDERLE-PRAXIS BIOLOGICALS
NIS VACCINE PRODUCTION FACILITY

OPV FILL AREA
AIR FLOW DIAGRAM

M4.2

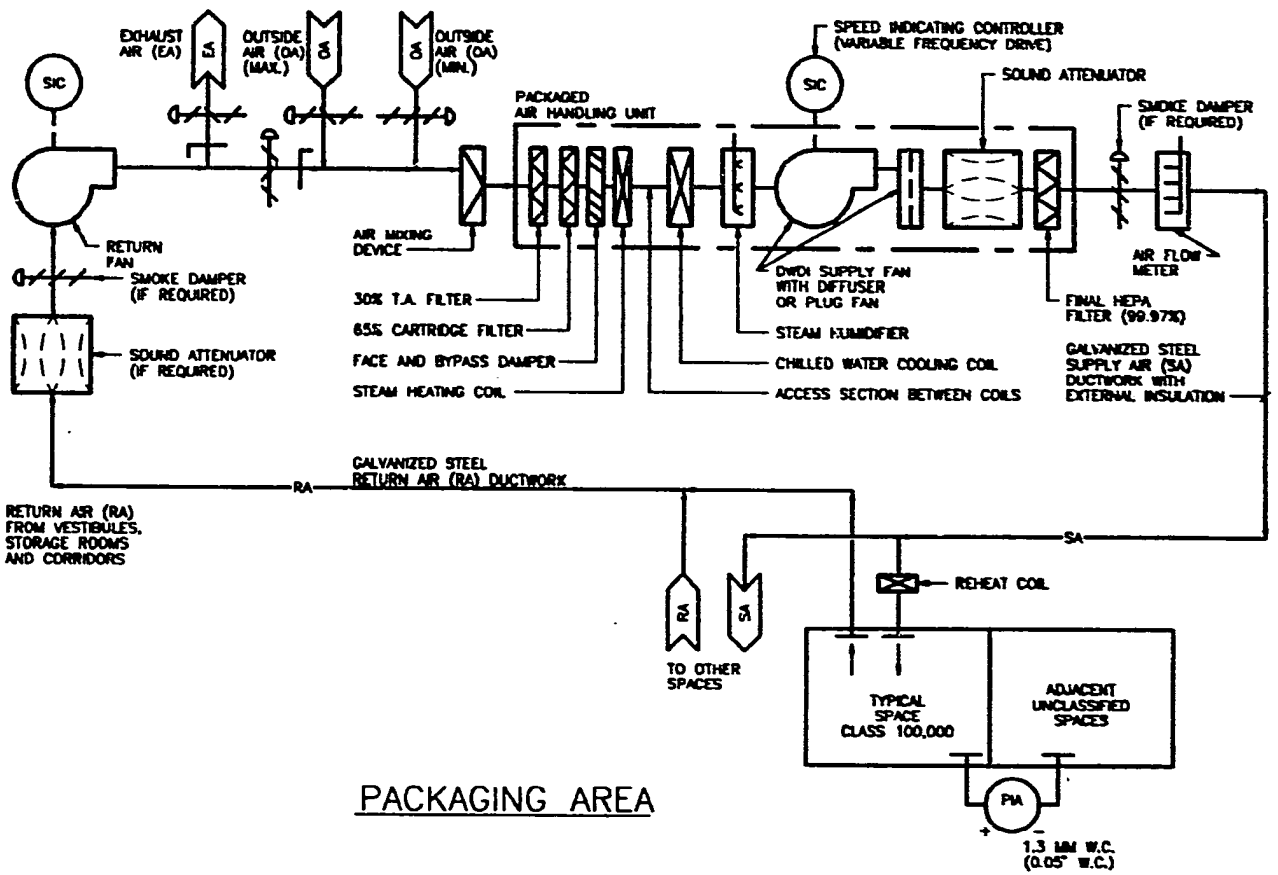

PACKAGING AREA

DESIGN CRITERIA:

SPACE LOADS:
SPACE TEMP = 22°C ±2°C (72°F ±3°F)
SPACE HUMIDITY = 30% TO 50% RH
OUTSIDE WINTER = -25°C (-15°F)
OUTSIDE SUMMER = 29°C DB/20.6°C WB (84°F/68°F)

COIL LOADS:
OUTSIDE WINTER = -30°C (-22°F)
OUTSIDE SUMMER = 32°C DB/21°C WB (90°F/70°F)

AIR CHANGES PER HOUR:
ALL SPACES = 30 AC/HR

TYPICAL OF ONE SYSTEM AT 11,800 LITERS/SEC. (25,000 CFM)

CONTROL SEQUENCE:

FANS RUN CONTINUOUSLY.
SUPPLY FAN SPEED IS MODULATED BY SIC TO MAINTAIN CONSTANT AIR FLOW AT AIR FLOW METERS.
HEATING AND COOLING COIL VALVES ARE MODULATED TO MAINTAIN CONSTANT DISCHARGE TEMPERATURE.
IF SPACE HUMIDITY IN RA DUCT RISES ABOVE SETPOINT AND UNIT IS IN COOLING MODE, COOLING COIL OPENS FULLY TO DEHUMIDIFY.
HUMIDIFIER STEAM VALVE IS MODULATED IN HEATING MODE TO MAINTAIN MINIMUM SETPOINT.
DRY BULB ECONOMIZER MODULATES OA\RA\EA DAMPERS.
UNIT PROTECTED BY FREEZE STAT AND SMOKE DETECTORS.

RETURN AIR WILL BE AIR BALANCED TO MAINTAIN POSITIVE PRESSURE RELATIVE TO ADJACENT UNCLASSIFIED SPACES.

AEI

LEDERLE-PRAXIS BIOLOGICA
NIS VACCINE PRODUCTION FAC

OPV PACKAGING
AIR FLOW DIAGRAM

DTP Batch, Fill and Packaging

- DTP Batching Air Flow Diagram M5.1
- DTP Fill Area Air Flow Diagram M5.2
- DTP Packaging Air Flow Diagram M5.3

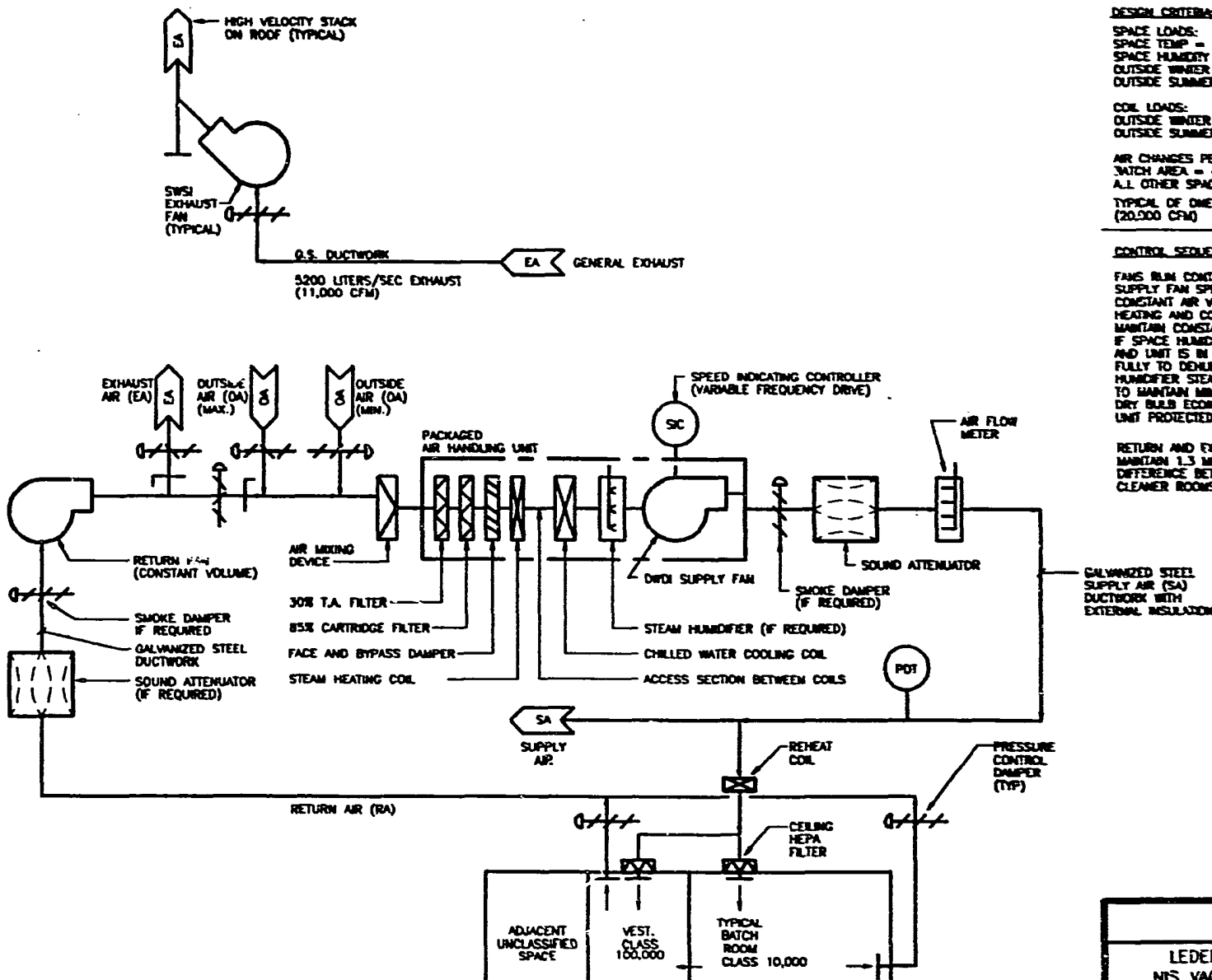

DTP BULKING AIR FLOW DIAGRAM

DESIGN CRITERIA:

SPACE LOADS:
SPACE TEMP = 22°C ±2°C (72°F ±3°F)
SPACE HUMIDITY = 30% TO 50% RH
OUTSIDE WINTER = -28°C (-19°F)
OUTSIDE SUMMER = 29°C DB/20.8°C WB (84°F/69°F)

COIL LOADS:
OUTSIDE WINTER = -30°C (-22°F)
OUTSIDE SUMMER = 32°C DB/21°C WB (90°F/70°F)

AIR CHANGES PER HOUR:
WATCH AREA = 40 AC/HR
ALL OTHER SPACES = 30 AC/HR

TYPICAL OF ONE SYSTEM AT 9,400 L/S/SEC. (20,000 CFM)

CONTROL SEQUENCE:

FANS RUN CONTINUOUSLY.
SUPPLY FAN SPEED IS MODULATED BY SIC TO MAINTAIN CONSTANT AIR VOLUME AT AIR FLOW METER.
HEATING AND COOLING COIL VALVES ARE MODULATED TO MAINTAIN CONSTANT DISCHARGE TEMPERATURE.
IF SPACE HUMIDITY IN RA DUCT RISES ABOVE SETPOINT AND UNIT IS IN COOLING MODE, COOLING COIL OPENS FULLY TO DEHUMIDIFY.
HUMIDIFIER STEAM VALVE IS MODULATED IN HEATING MODE TO MAINTAIN MINIMUM SETPOINT.
DRY BULB ECONOMIZER MODULATES OA/RA/EA DAMPERS.
UNIT PROTECTED BY FREEZE STAT AND SMOKE DETECTORS.

RETURN AND EXHAUST FLOWS WILL BE MODULATED TO MAINTAIN 1.3 MM (0.05") WATER COLUMN PRESSURE DIFFERENCE BETWEEN ROOM CLASSIFICATIONS. CLEANER ROOMS WILL BE AT HIGHER PRESSURE.

AEI

LEDERLE-PRAXIS BIOLOGICA
NIS VACCINE PRODUCTION FAC

DTP BATCHING
AIR FLOW DIAGRAM

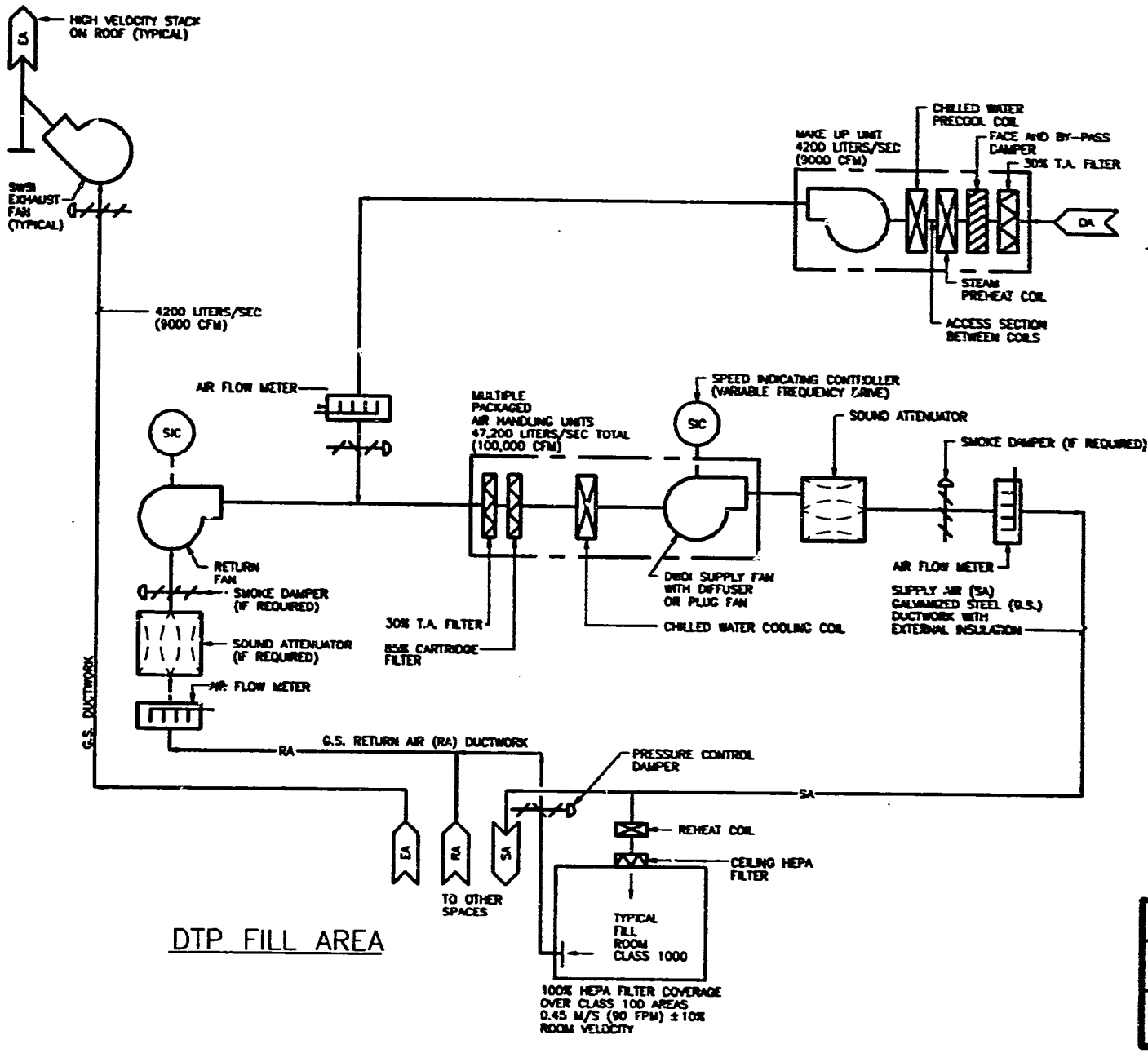

DTP FILL AREA

DESIGN CRITERIA:

SPACE LOADS:
SPACE TEMP = 20°C ±2°C (68°F ±3°F)
TYPICAL SPACE HUMIDITY = 30% TO 60% RH
OUTSIDE WINTER = -28°C (-18°F)
OUTSIDE SUMMER = 23°C DB/20.8°C WB (94°F DB/78°F WB)

COIL LOADS:
OUTSIDE WINTER = -30°C (-22°F)
OUTSIDE SUMMER = 32°C DB/21°C WB (90°F DB/70°F

SPACES TO BE CLASS 1000 WITH CLASS 100 OVER FILL MACHINES

TYPICAL OF ONE SYSTEM WITH TWO 23,600 LITER/SEC (50,000 CFM) AIR HANDLING UNITS.

CONTROL SEQUENCE:

FANS RUN CONTINUOUSLY.
SUPPLY FAN SPEED IS MODULATED BY SIC TO MAINTAIN CONSTANT AIR FLOW AT AIR FLOW METERS.
HEATING AND COOLING COIL VALVES ARE MODULATED TO MAINTAIN CONSTANT DISCHARGE TEMPERATURE.
CONTROL LOOP WILL RESET CHILLED WATER VALVES TO MAINTAIN SETPOINT AT SPACE HUMIDISTAT.
UNIT PROTECTED BY FREEZE STAT AND SMOKE DETECTORS.

RETURN AND EXHAUST FLOWS WILL BE MODULATED TO MAINTAIN 1.3 MM (0.05") WATER COLUMN PRESSURE DIFFERENCE BETWEEN ROOM CLASSIFICATIONS. CLEANER ROOMS WILL BE AT HIGHER PRESSURE.

AEI

LEDERLE-PRAXIS BIOLOGICALS
NIS VACCINE PRODUCTION FACILITY

DTP FILL AREA
AIR FLOW DIAGRAM

M5.2

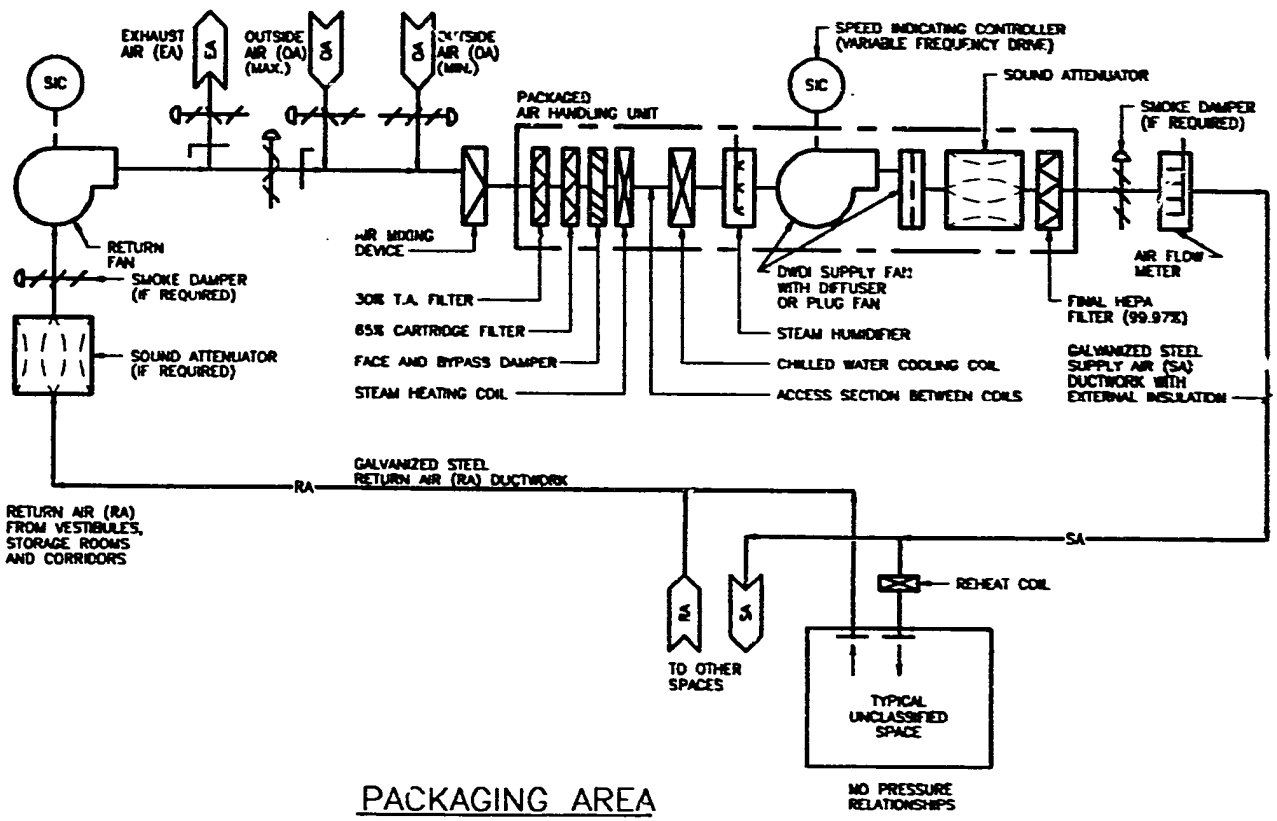

PACKAGING AREA

DESIGN CRITERIA:

SPACE LOADS:
SPACE TEMP = 22°C ±2°C (72°F ±3°F)
SPACE HUMIDITY = 30% TO 50% RH
OUTSIDE WINTER = -28°C (-19°F)
OUTSIDE SUMMER = 29°C DB/20.5°C WB (84°F/69°F)

COIL LOADS:
OUTSIDE WINTER = -30°C (-22°F)
OUTSIDE SUMMER = 32°C DB/21°C WB (90°F/70°F)

AIR CHANGES PER HOUR:
ALL SPACES = 30 AC/HR

TYPICAL OF ONE SYSTEM AT 11,800 LITERS/SEC (25,000 CFM)

CONTROL SEQUENCE:

FANS RUN CONTINUOUSLY.
SUPPLY FAN SPEED IS MODULATED BY SIC TO MAINTAIN CONSTANT AIR FLOW AT AIR FLOW METERS.
HEATING AND COOLING COIL VALVES ARE MODULATED TO MAINTAIN CONSTANT DISCHARGE TEMPERATURE.
IF SPACE HUMIDITY IN RA DUCT RISES ABOVE SETPOINT AND UNIT IS IN COOLING MODE, COOLING COIL OPENS FULLY TO DEHUMIDIFY.
HUMIDIFIER STEAM VALVE IS MODULATED IN HEATING MODE TO MAINTAIN MINIMUM SETPOINT.
DRY BULB ECONOMIZER MODULATES OA\RA\EA DAMPERS.
UNIT PROTECTED BY FREEZE STAT AND SMOKE DETECTORS.

AEI

LEDERLE-PRAXIS BIOLOGICALS
NIS VACCINE PRODUCTION FACILITY

DTP PACKAGING
AIR FLOW DIAGRAM

M5.3

QC Testing Laboratories

- Lab Air Flow Diagram M6.1

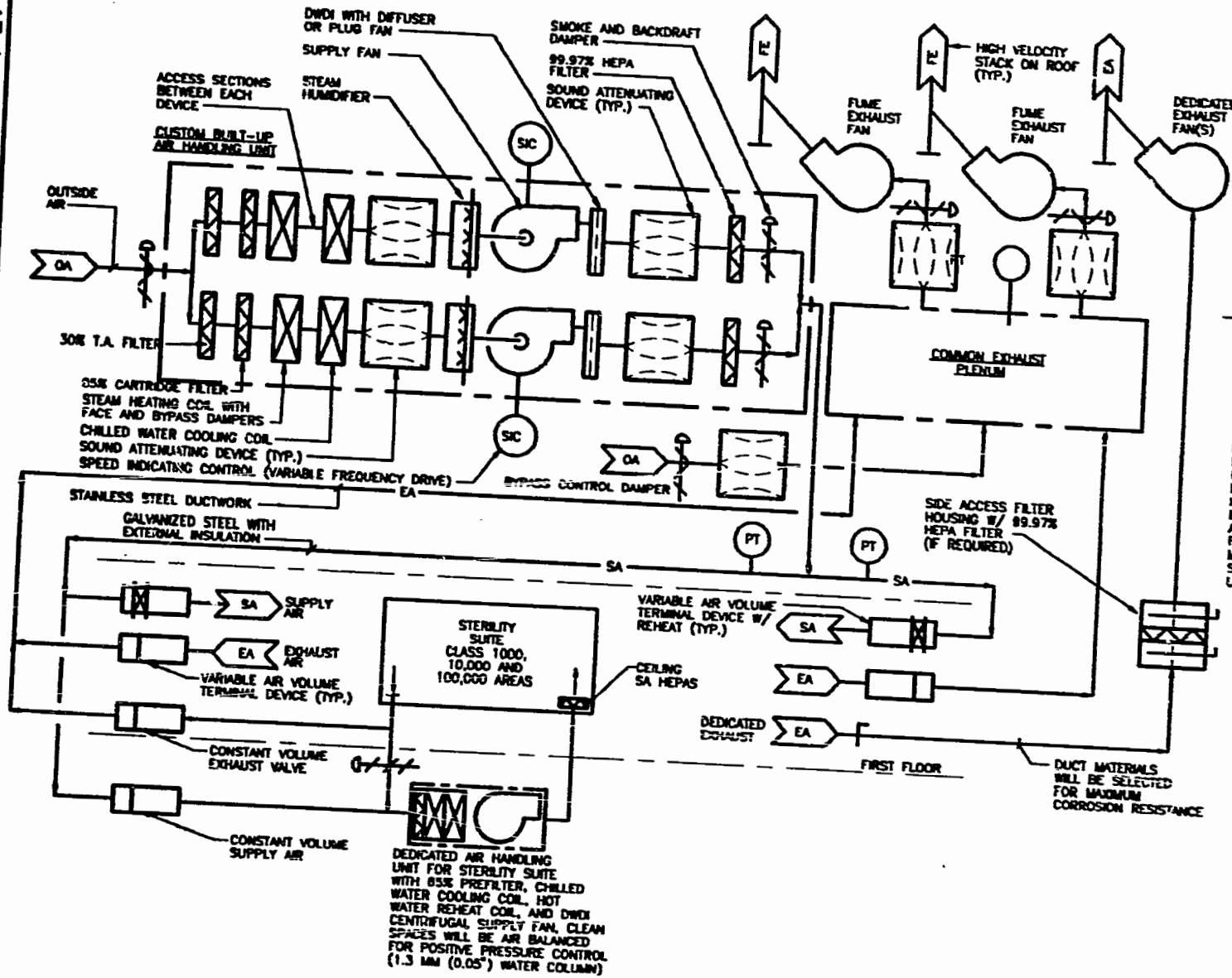

DESIGN CRITERIA:

SPACE LOADS:
SPACE CONDITIONS = 22.2°C ±2°C (72° ±3°) DB/ 30%-60% RH

OUTSIDE TEMP. = -28°C (-19°F) WINTER
= 29°C DB/20.5°C WB (84°F/69°F) SUMMER

COIL LOADS:
OUTSIDE TEMP. = -30°C (-22°F) WINTER
= 32°C DB/21°C WB (90°F/70°F) SUMMER

AIR CHANGES PER HOUR:
= SENSIBLE LOAD OR ROOM EXHAUST WHICHEVER IS GREATER

TYPICAL OF ONE SYSTEM WITH DUAL 50% FANS.
TOTAL UNIT CAPACITY = 24,500 LITERS/SEC. (52,000 CFM)

CONTROL SEQUENCE:

SYSTEM IS DESIGNED AS A 100% OA HEATING-COOLING, SINGLE DUCT, VARIABLE VOLUME REHEAT SYSTEM.
SYSTEM SHALL RUN CONTINUOUSLY.
SUPPLY FANS ARE MOUNTED BY SIC TO MAINTAIN SET PRESSURE AT PRESSURE TRANSMITTERS.
FUME EXHAUST FANS ARE CONSTANT PRESSURE AND MAINTAIN SET PRESSURE AT PRESSURE TRANSMITTER BY MODULATING OA BYPASS DAMPER, THEREBY MAINTAINING CONSTANT AIR FLOW AND STACK VELOCITY.
HEATING AND COOLING COIL VALVES ARE MODULATED TO MAINTAIN CONSTANT DISCHARGE TEMPERATURE.
IF SPACE HUMIDITY IN SPACE RISES ABOVE SETPOINT AND UNIT IS IN COOLING MODE, COOLING COIL OPENS FULLY TO DEHUMIDIFY, HUMIDIFIER STEAM VALVE IS MODULATED IN HEATING MODE TO MAINTAIN MINIMUM SETPOINT.
UNIT PROTECTED BY FREEZE STAT AND SMOKE DETECTOR.

QA/QC LAB AREA AIR FLOW DIAGRAM

AEI

LEDERLE-PRAXIS BIOLOGICALS
NIS VACCINE PRODUCTION FACILITY

QA/QC-LAB AREA
AIR FLOW DIAGRAM

M6.1

Vivarium

- Animal Drinking Water P7.1
- Vivarium Air Flow Diagram M7.1
- Vivarium Monitoring E7.1

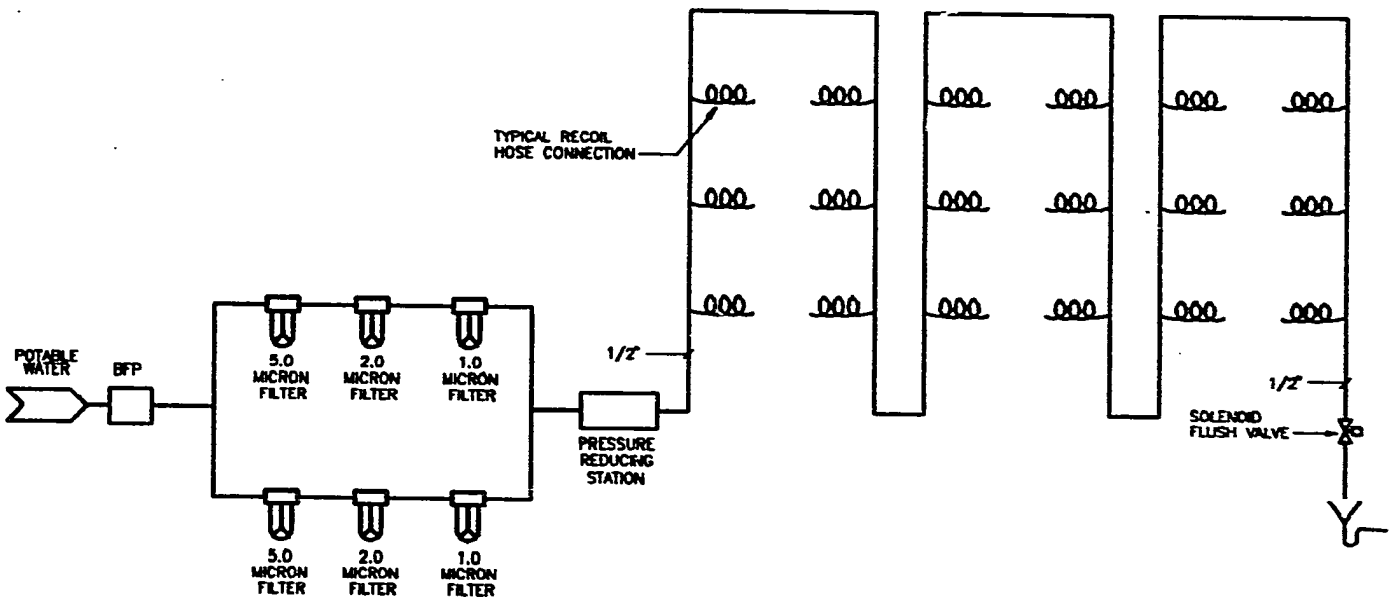

ANIMAL DRINKING WATER SYSTEM

DESIGN CRITERIA:

POTABLE WATER WILL BE FILTERED AS REQUIRED TO REMOVE PARTICLES.

PRESSURE IN ANIMAL ROOMS WILL BE REDUCED TO 0.2 BAR (2.5 – 3 PSI).

SYSTEM DESCRIPTION:

FILTERED DRINKING WATER WILL BE PROVIDED IN ALL ANIMAL HOLDING ROOMS.

DISTRIBUTION PIPING WITHIN ANIMAL ROOMS WILL BE STAINLESS STEEL.

ANIMAL ROOM DISTRIBUTION PIPING WILL BE AUTOMATICALLY FLUSHED TWICE DAILY FOR A DURATION OF 60 SECONDS EACH.

THE ASSUMPTION AT THIS TIME IS THAT PRE-TREATING THE DRINKING WATER WITH REVERSE OSMOSIS EQUIPMENT IS NOT DESIRED.

- MICE, RATS, RABBITS, GUINEA PIGS, MONKEYS

AEI

LEDERLE-PRAXIS BIOLOGICALS
NIS VACCINE PRODUCTION FACILITY

ANIMAL DRINKING WATER SYSTEM

NO. P7.1

174

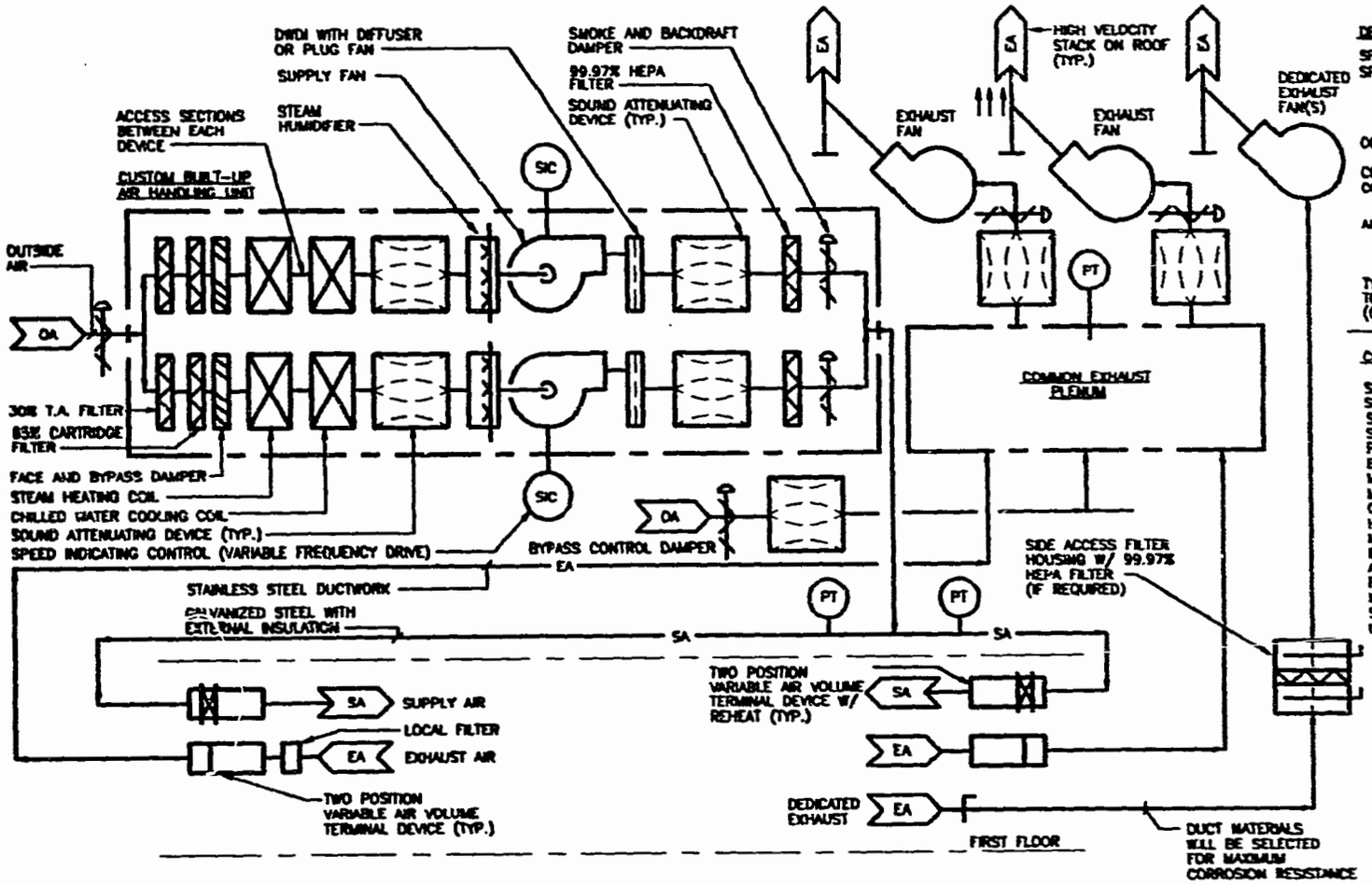

DESIGN CRITERIA:

SPACE LOADS:
SPACE CONDITIONS = 22.2°C ±2°C (72° ±3°F) DB/ 30%-60% RH

OUTSIDE TEMP. = -28°C (-19°F) WINTER
= 29°C DB/20.6°C WB (84°F/69°F)

COIL LOADS:
OUTSIDE TEMP. = -30°C (-22°F) WINTER
= 32°C DB/21°C WB (90°F/70°F) SUMMER

AIR CHANGES PER HOUR:
= SENSIBLE LOAD OR ROOM EXHAUST WHICHEVER IS GREATER

TYPICAL OF ONE SYSTEM WITH DUAL 50% FANS.
TOTAL SYSTEM CAPACITY = 32,000 LITERS/SEC. (68,000 CFM)

CONTROL SEQUENCE:

SYSTEM IS DESIGNED AS A 100% OA HEATING-COOLING, SINGLE DUCT, VARIABLE VOLUME REHEAT SYSTEM.
SYSTEM SHALL RUN CONTINUOUSLY.
SUPPLY FANS ARE MOUNTED BY SIC TO MAINTAIN SET PRESSURE AT PRESSURE TRANSMITTERS.
EXHAUST FANS ARE CONSTANT PRESSURE AND SHALL MAINTAIN SET PRESSURE AT PRESSURE TRANSMITTER BY MODULATING OA BYPASS DAMPER, THEREBY MAINTAINING CONSTANT AIR FLOW AND STACK VELOCITY.
HEATING AND COOLING COIL VALVES ARE MODULATED TO MAINTAIN CONSTANT DISCHARGE TEMPERATURE.
IF SPACE HUMIDITY IN SPACE RISES ABOVE SETPOINT AND UNIT IS IN COOLING MODE, COOLING COIL OPENS FULLY TO DEHUMIDIFY. HUMIDIFIER STEAM VALVE IS MODULATED IN HEATING MODE TO MAINTAIN MINIMUM SETPOINT.
UNIT PROTECTED BY FREEZE STAT AND SMOKE DETECTOR.

VIVARIUM AIR FLOW DIAGRAM

AEI

LEDERLE-PRAXIS BIOLOGICALS
NIS VACCINE PRODUCTION FACILITY

VIVARIUM AIR FLOW DIAGRAM | M7.1

175

SYSTEM DESCRIPTION

SYSTEM WILL BE A DEDICATED COMPUTER SYSTEM
DIRECT CONTROL OF ANIMAL WATERING AND LIGHTI
SYSTEM WILL ALSO MONITOR STATUS OF HVAC SYS
AND SECURITY.

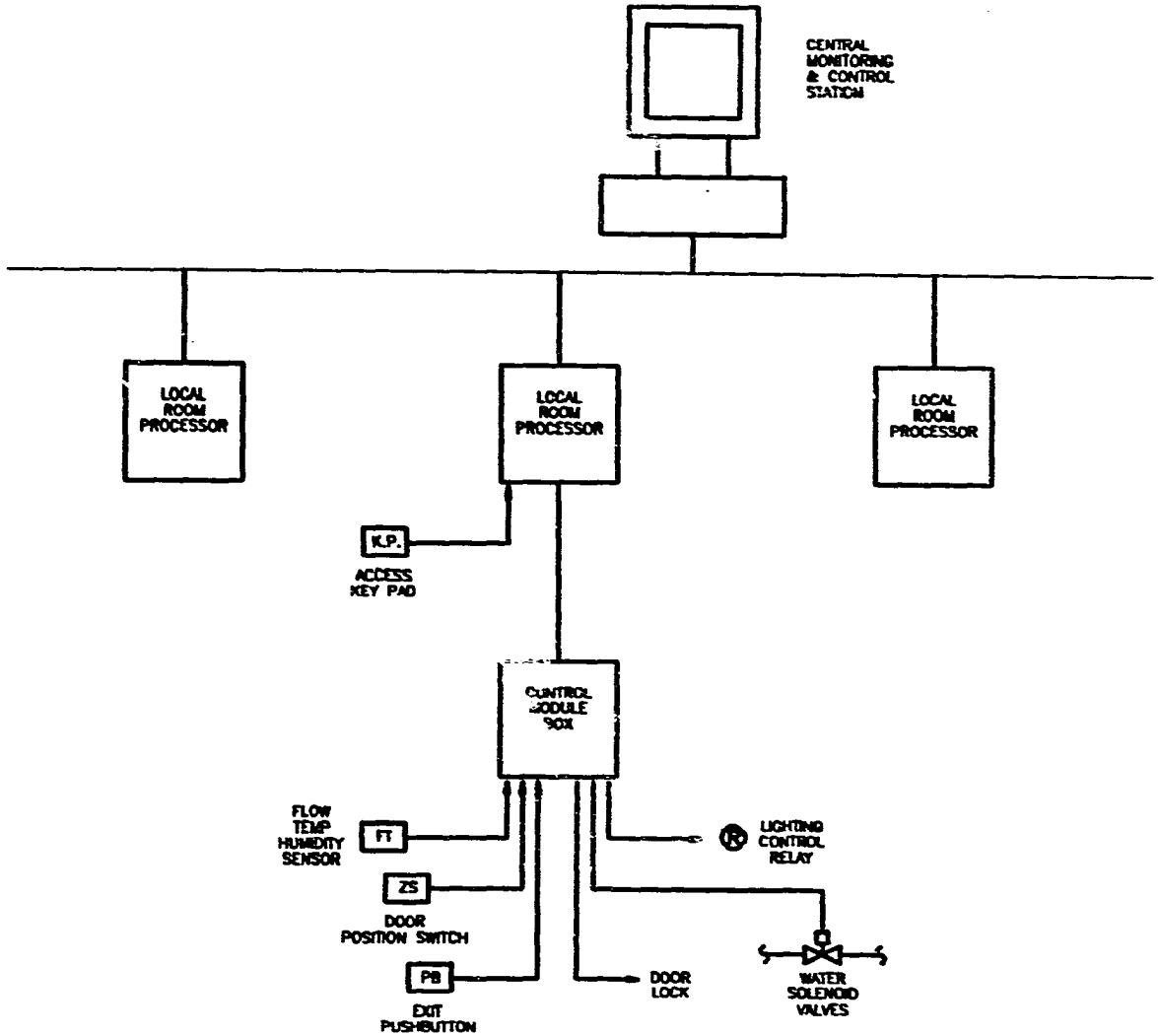

AEI

LEDERLE–PRAXIS BIOLOGICALS
NIS VACCINE PRODUCTION FACILITY

VIVARIUM MONITORING
SYSTEM DIAGRAM

E7.1

176

Warehouse and Support

- Coolers P8.1
- Freezers P8.2
- Incubator Rooms P8.3
- Warehouse Air Flow Diagram M8.1
- Support Area Air Flow Diagram M8.2

177

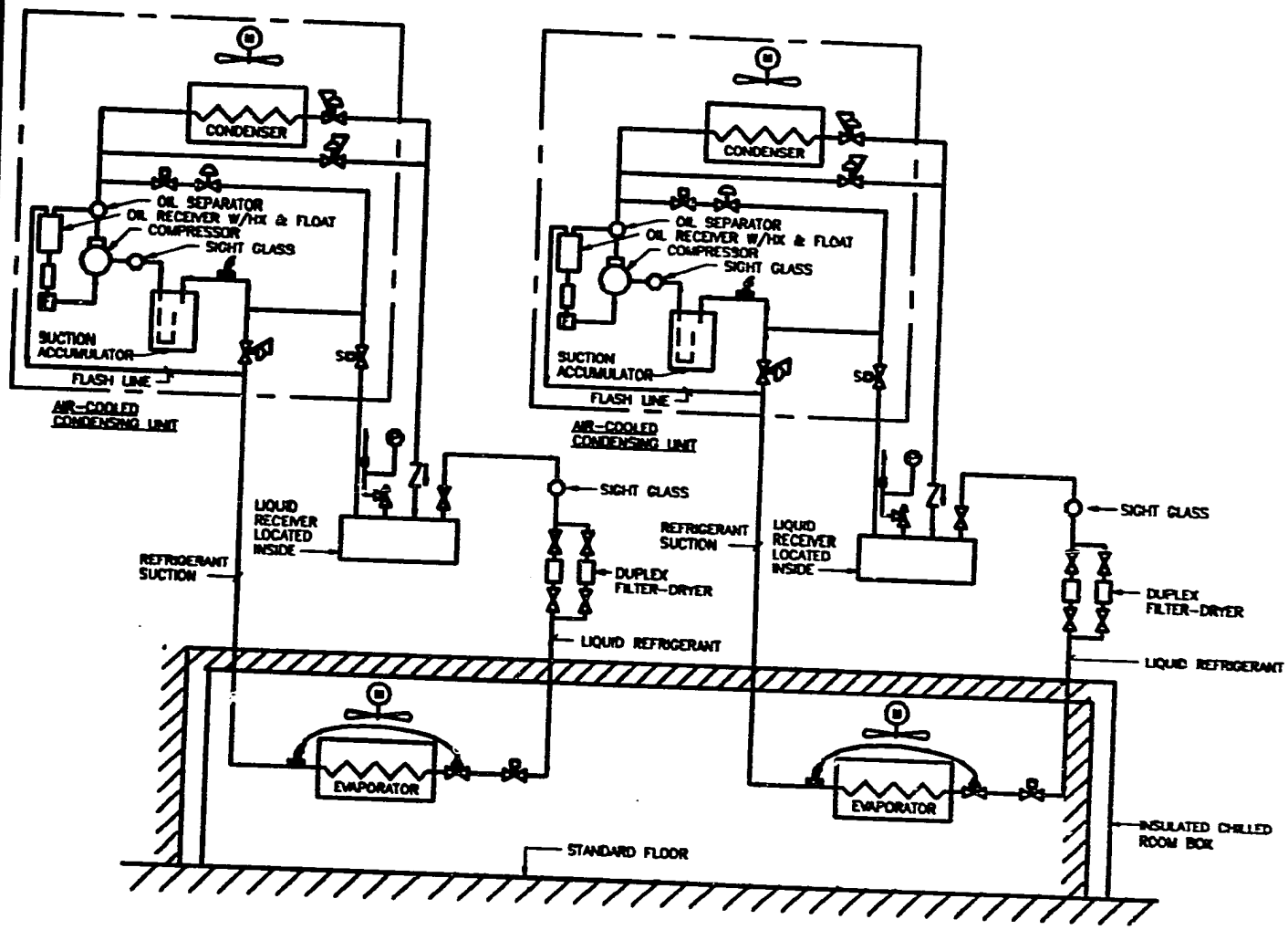

DESIGN CRITERIA:

BOX DESIGN TEMPERATURE = -25C (-13F) ±3C
OUTSIDE DESIGN TEMPERATURE = 32C (90F)
100% BACKUP COMPRESSOR AND CONDENSER CAPACITY.
EVAPORATORS WILL BE SIZED FOR N+1.
TYPICAL OF 8 CHILLED ROOMS.
EACH COMPRESSOR WILL BE 1.5 TONS, EXCEPT CHILLED ROOM #2 WHICH WILL BE 3.5 TONS.
TOTAL AREA OF 8 CHILLED ROOMS IS 244 SQUARE METERS. (2625 SQ. FT.)

CONTROL SEQUENCE:

LEAD COMPRESSOR RUNS CONTINUOUSLY. IF UNIT FAILS MAINTAIN SUCTION OR HEAD PRESSURE, OPERATION SHALL SWITCH TO STANDBY UNIT.
OPERATION SHALL BE ROTATED ON A 75%/25%/ _ RUNTIME.
DURING DEFROST, FAN SHUTS DOWN AND ELECTRIC HEAT IS ACTIVATED FOR DRAIN PAN AND EVAPORATOR.
DEFROST IS TIME AND TEMPERATURE INITIATED AND TEMPERATURE TERMINATED.
THE SECOND UNIT IS OPERATIONAL WHEN THE FIRST UNIT IS IN DEFROST. CONTROLS ALTERNATE OPERATION.
HOT GAS AND LIQUID LINE VALVES MAINTAIN HEAD PRESSURE AND SUCTION PRESSURE WITHIN NORMAL OPERATING LIMITS.

AIR-COOLED DIRECT EXPANSION
SYSTEM WITH ELECTRIC DEFROST
TYPICAL OF 2 UNITS PER ROOM

AEI

LEDERLE-PRAXIS BIOLOGICA
NIS VACCINE PRODUCTION FAC

CHILLED ROOM

178

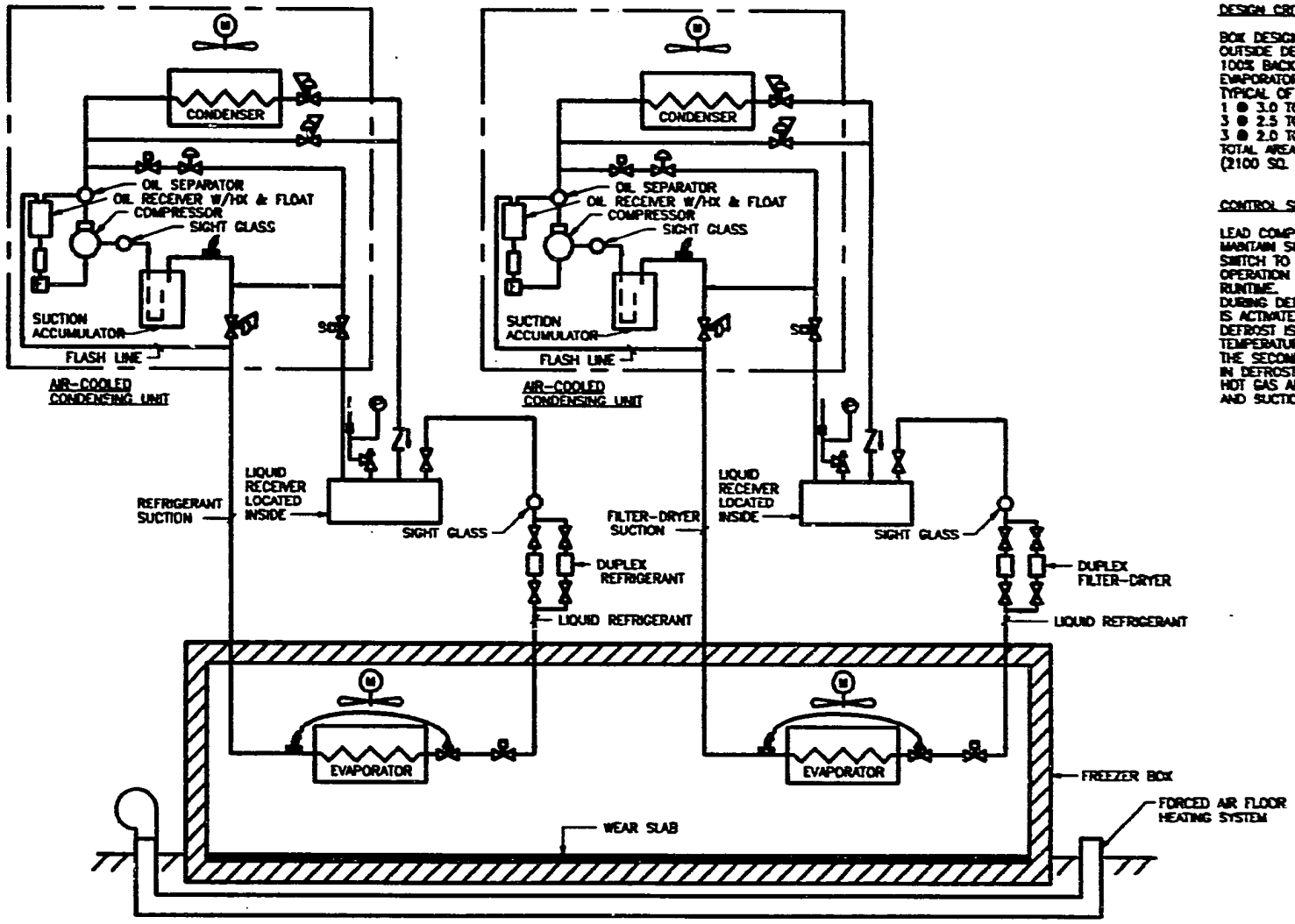

AIR-COOLED DIRECT EXPANSION SYSTEM WITH ELECTRIC DEFROST

TYPICAL OF 2 UNITS PER ROOM

DESIGN CRITERIA:

BOX DESIGN TEMPERATURE = -25°C (-13°F) ±3°C
OUTSIDE DESIGN TEMPERATURE = 32°C (90°F)
100% BACKUP COMPRESSOR AND CONDENSER CAPACITY.
EVAPORATORS WILL BE SIZED FOR N+1.
TYPICAL OF 7 FREEZERS.
1 @ 3.0 TONS
3 @ 2.5 TONS
3 @ 2.0 TONS
TOTAL AREA OF 7 FREEZERS IS 195 SQUARE METERS.
(2100 SQ. FT.)

CONTROL SEQUENCE:

LEAD COMPRESSOR RUNS CONTINUOUSLY. IF UNIT FAILS MAINTAIN SUCTION OR HEAD PRESSURE, OPERATION SHAL SWITCH TO STANDBY UNIT.
OPERATION SHALL BE ROTATED ON A 75%/25%/ RATIO (RUNTIME.
DURING DEFROST, FAN SHUTS DOWN AND ELECTRIC HEAT IS ACTIVATED FOR DRAIN PAN AND EVAPORATOR.
DEFROST IS TIME AND TEMPERATURE INITIATED AND TEMPERATURE TERMINATED.
THE SECOND UNIT IS OPERATIONAL WHEN THE FIRST UNIT IS IN DEFROST. CONTROLS ALTERNATE OPERATION.
HOT GAS AND LIQUID LINE VALVES MAINTAIN HEAD PRESSURE AND SUCTION PRESSURE WITHIN NORMAL OPERATING LIMITS.

AEI

LEDERLE-PRAXIS BIOLOGICALS
NIS VACCINE PRODUCTION FACILITY

FREEZER DIAGRAM

P8.2

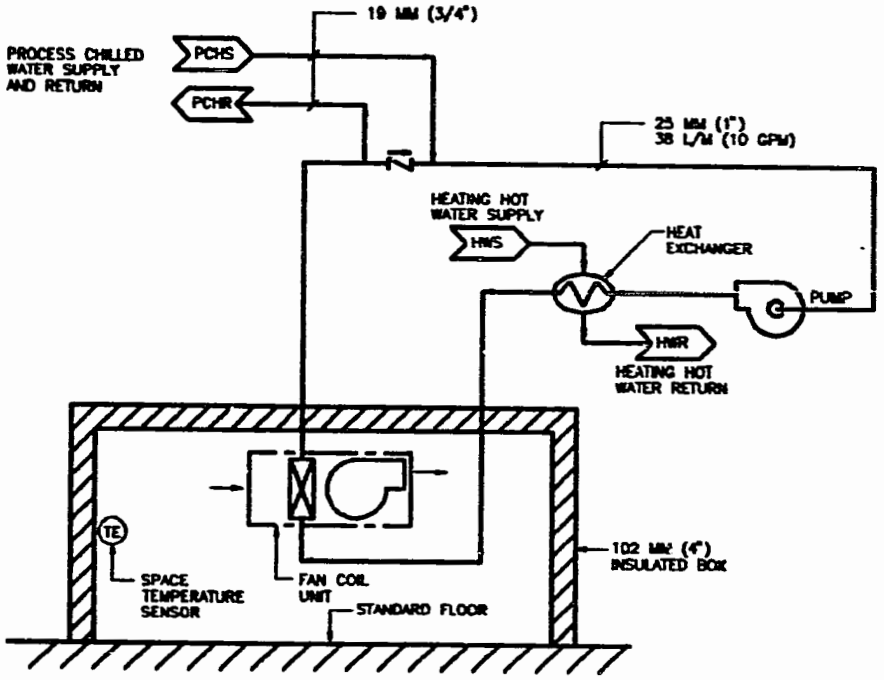

INCUBATOR ROOM

DESIGN CRITERIA:

AMBIENT CONDITIONS OUTSIDE OF BOX = 22-25°C
INCUBATOR TEMPERATURE = 22-37°C ±1°C (ADJ
40 AIR CHANGES PER HOUR

CONTROL SEQUENCE:

FAN COIL FAN AND PUMP RUN CONTINUOUSLY. CONTROL LOOP MODULATES HOT WATER AND PROCESS CHILLER WATER VALVES IN SEQUENCE TO MAINTAIN SETPOINT AT ROOM TEMPERATURE SENSOR.

AEI

LEDERLE-PRAXIS BIOLOGICA
NIS VACCINE PRODUCTION FAC

INCUBATOR ROOM

160

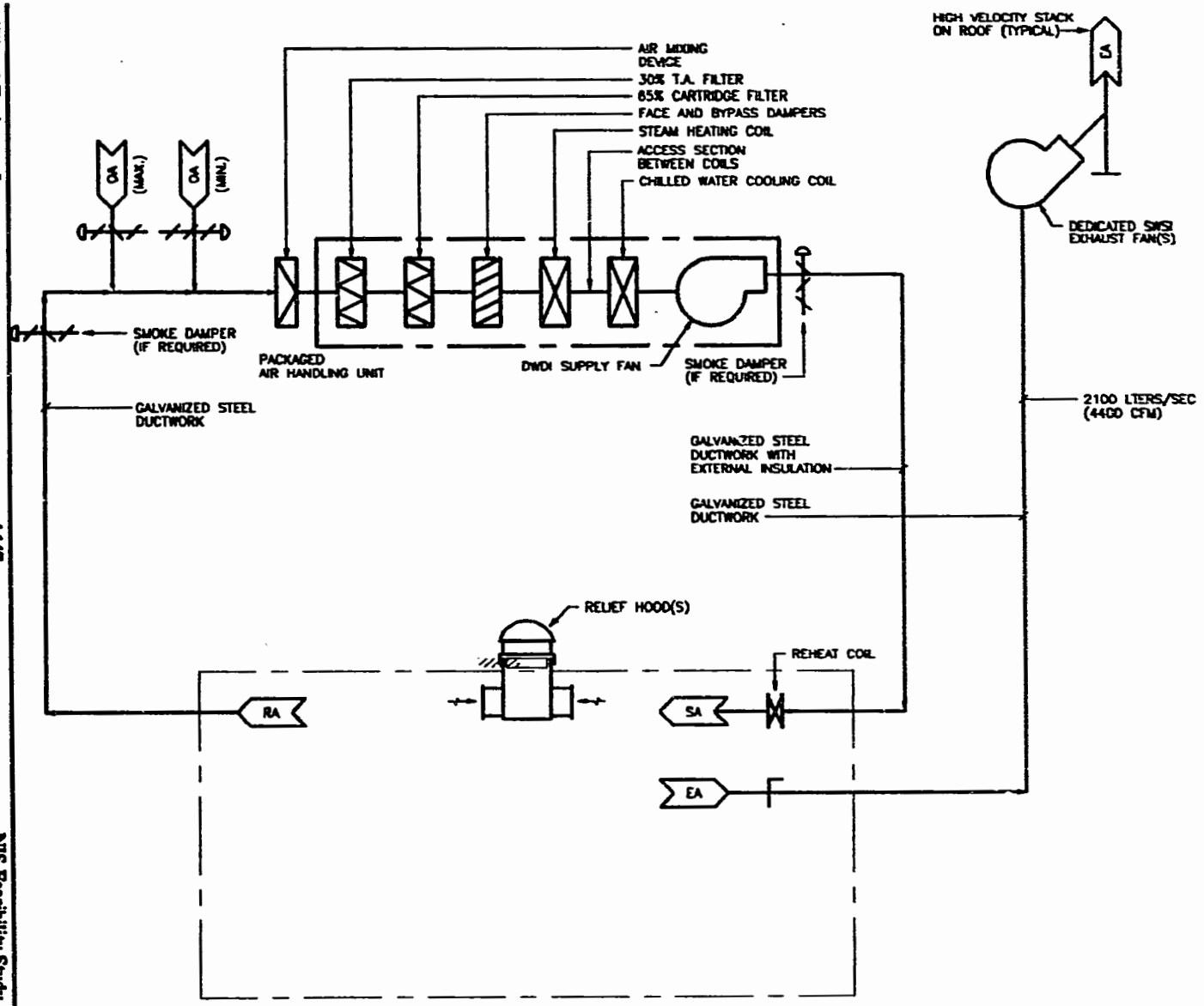

WAREHOUSE AIR FLOW DIAGRAM

DESIGN CRITERIA:

SPACE CONDITIONS:
OFFICE AREAS: TEMP. = 24°C ±2°C (75°F ±3°F)
HUMIDITY = 50% RH MAX.

WAREHOUSE SHIP/RECEIVE: TEMP. = 21.1°C ±2°C (70° ±3
HUMIDITY = 50% RH MAX.

OUTSIDE TEMP = -28°C (-19°F) WINTER
= 29°C DB/20.5°C WB (84°F/68°F)

COIL LOADS:
OUTSIDE TEMP = -30°C (-22°F) WINTER
= 32°C DB/21°C WB (90°F/70°F) SUMMER

AIR CHANGES PER HOUR:
OFFICE AREA = 6 MINIMUM
WAREHOUSE SHIP/RECEIVE = 10 MINIMUM

TYPICAL OF ONE SYSTEM AT 13,200 LITERS/SEC (28,000 CFM)

CONTROL SEQUENCE:

FANS RUN CONTINUOUSLY.
HEATING AND COOLING COIL VALVES ARE MODULATED MAINTAIN CONSTANT DISCHARGE TEMPERATURE.
IF SPACE HUMIDITY IN RA DUCT RISES ABOVE [illegible] AND UNIT IS IN COOLING MODE, COOLING COIL FULLY TO DEHUMIDIFY.
HUMIDIFIER STEAM VALVE IS MODULATED IN HEJ TO MAINTAIN MINIMUM SETPOINT.
DRY BULB ECONOMIZER MODULATES OA\RA\EA
UNIT PROTECTED BY FREEZE STAT AND SMOKE DETEC.

AEI

LEDERLE-PRAXIS BIOLOGICA
NIS VACCINE PRODUCTION FAC

WAREHOUSE AIR FLOW DIAGRAM

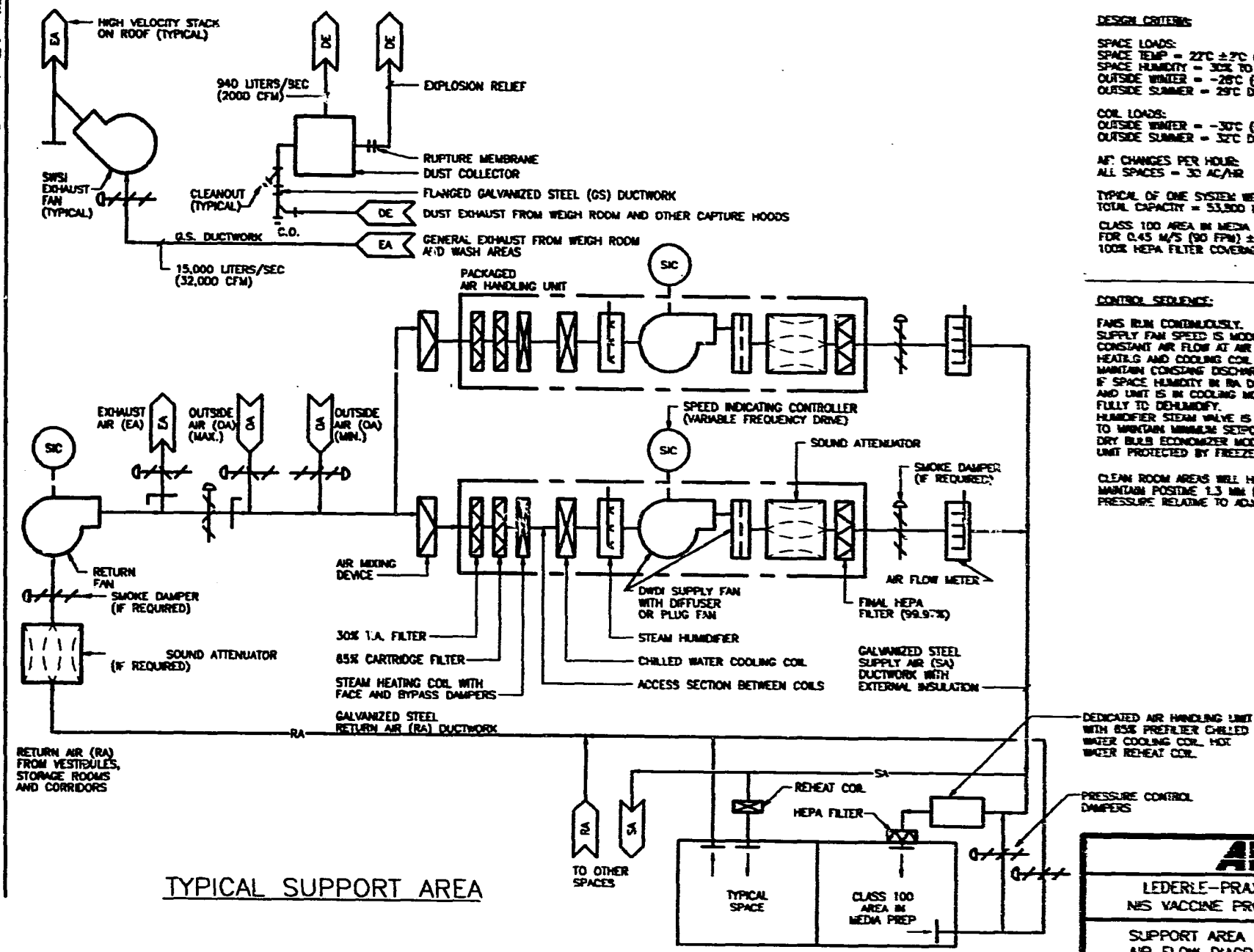

TYPICAL SUPPORT AREA

DESIGN CRITERIA:

SPACE LOADS:
SPACE TEMP = 22°C ±2°C (72°F ±3°F)
SPACE HUMIDITY = 30% TO 50% RH
OUTSIDE WINTER = -28°C (-18°F)
OUTSIDE SUMMER = 29°C DB/20.8°C WB (85°F/99°F)

COIL LOADS:
OUTSIDE WINTER = -30°C (-22°F)
OUTSIDE SUMMER = 32°C DB/21°C WB (90°F/70°F)

AIR CHANGES PER HOUR:
ALL SPACES = 30 AC/HR

TYPICAL OF ONE SYSTEM WITH DUAL 50% FANS.
TOTAL CAPACITY = 53,000 LITERS/SEC. (11,000 CFM)

CLASS 100 AREA IN MEDIA PREP WILL BE DESIGNED FOR 0.45 M/S (90 FPM) ±10% ROOM VELOCITY WITH 100% HEPA FILTER COVERAGE.

CONTROL SEQUENCE:

FANS RUN CONTINUOUSLY.
SUPPLY FAN SPEED IS MODULATED BY SIC TO MAINTAIN CONSTANT AIR FLOW AT AIR FLOW METERS.
HEATING AND COOLING COIL VALVES ARE MODULATED TO MAINTAIN CONSTANT DISCHARGE TEMPERATURE.
IF SPACE HUMIDITY IN RA DUCT RISES ABOVE SETPOINT AND UNIT IS IN COOLING MODE, COOLING COIL OPENS FULLY TO DEHUMIDIFY.
HUMIDIFIER STEAM VALVE IS MODULATED IN HEATING MODE TO MAINTAIN MINIMUM SETPOINT.
DRY BULB ECONOMIZER MODULATES OA/RA/EA DAMPERS. UNIT PROTECTED BY FREEZE STAT AND SMOKE DETECTOR.

CLEAN ROOM AREAS WILL HAVE PRESSURE CONTROL MAINTAIN POSITIVE 1.3 MM (0.05") WATER COLUMN PRESSURE RELATIVE TO ADJACENT SPACES.

AEI

LEDERLE-PRAXIS BIOLOGICALS
NIS VACCINE PRODUCTION FACILITY

SUPPORT AREA
AIR FLOW DIAGRAM

M8.2

Administration Office Area

- Office Air Flow Diagram M3.1

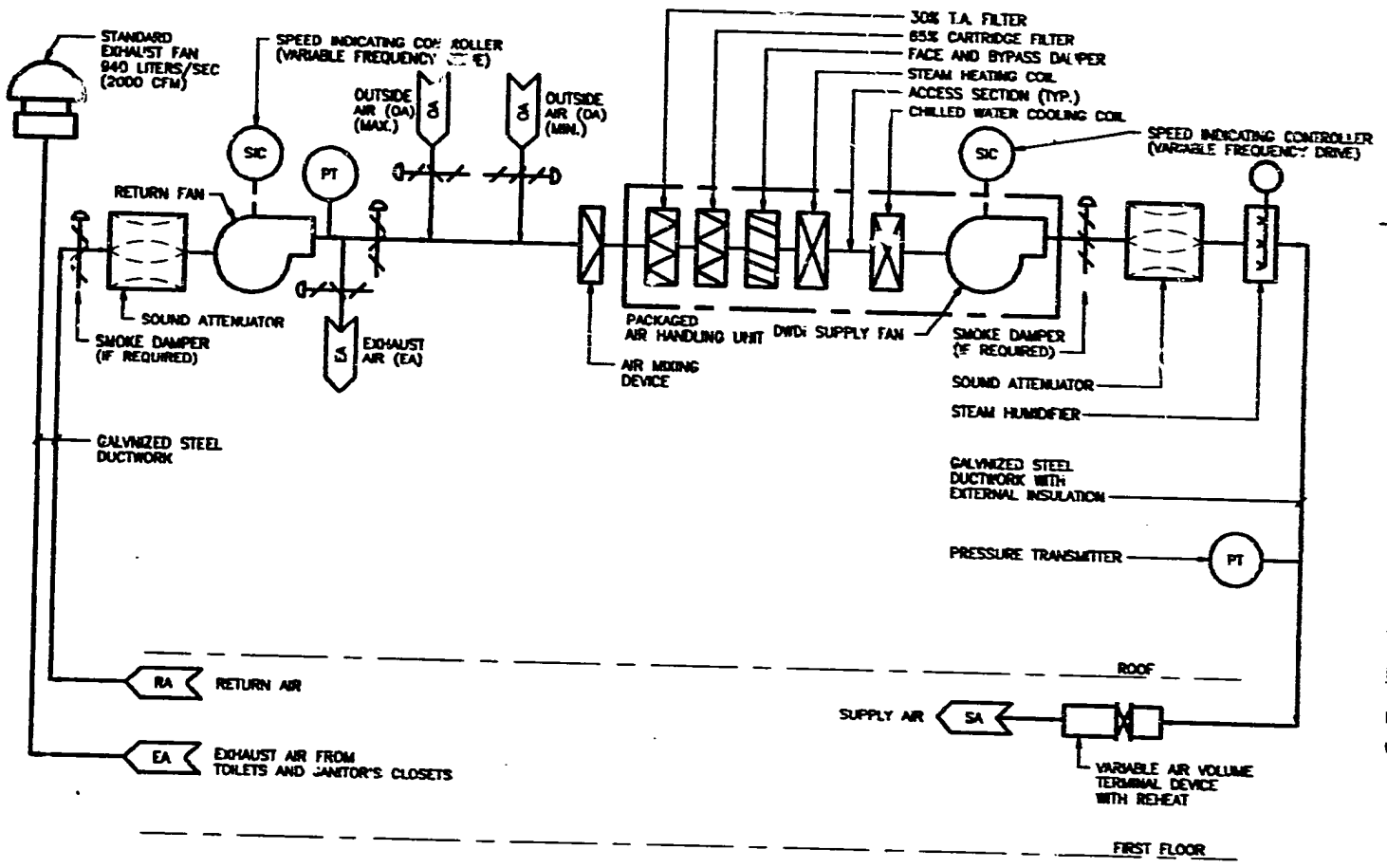

DESIGN CRITERIA:

SPACE LOADS:
SPACE CONDITIONS = 24°C ±2° (75 ±3°F) 30%-60% RH

OUTSIDE TEMP = -25°C (-19°F) WINTER
= 29°C DB/20.6°C WB (84°F/69°F)

COIL LOADS:
OUTSIDE TEMP = -30°C (-22°F) WINTER
= 32°C DB/27°C WB (90°F/70°F) SUMMER

AIR CHANGES PER HOUR:
OFFICE AREA = 4 (MINIMUM)
MAXIMUM = SENSIBLE COOLING LOAD

TYPICAL OF 1 SYSTEM AT 9440 LITERS/SEC (20000 CFM)

CONTROL SEQUENCE:

SYSTEM IS DESIGNED AS HEATING-COOLING, SINGLE VARIABLE VOLUME REHEAT SYSTEM.

FANS RUN CONTINUOUSLY DURING OCCUPIED PERIODS AND INTERMITTENTLY DURING UNOCCUPIED PERIODS.

SUPPLY FAN SPEED IS MODULATED TO MAINTAIN SET PRESSURE AT PRESSURE TRANSMITTER.

RETURN FAN SPEED IS MODULATED TO MAINTAIN CONSTANT POSITIVE PRESSURE IN RETURN FAN DISCHARGE PLENUM.

RETURN AIR DAMPER IS MODULATED TO MAINTAIN A CONSTANT NEGATIVE PRESSURE IN THE MIXED AIR PLENUM.

THE RELIEF EXHAUST DAMPER IS MODULATED TO MAINTAIN A POSITIVE PRESSURE DIFFERENTIAL BETWEEN SPACE AND OUTSIDE STATIC PRESSURE SENSORS.

HEATING AND COOLING COIL VALVES ARE MODULATED MAINTAIN CONSTANT DISCHARGE TEMPERATURE.

IF SPACE HUMIDITY IN RA DUCT RISES ABOVE SETPOINT AND UNIT IS IN COOLING MODE, COOLING COIL OPENS FULLY TO DEHUMIDIFY.

HUMIDIFIER STEAM VALVE IS MODULATED IN HEATING MODE TO MAINTAIN MINIMUM SETPOINT.

DRY BULB ECONOMIZER MODULATES MAXIMUM OA DAMPER.

UNIT PROTECTED BY FREEZE STAT AND SMOKE DETECTORS.

OFFICE AIR FLOW DIAGRAM

AEI

LEDERLE-PRAXIS BIOLOGICALS
NIS VACCINE PRODUCTION FACILITY

OFFICE
AIR FLOW DIAGRAM

M3.1

5. Process Equipment Utility Consumption

The following table lists the estimated utility loads to support the process. This information was used to help design the process utility systems, estimate the first cost and operational costs of the facility. They were also used to determine whether central utility systems existing at the proposed site could support these requirements or if new central systems were required.

Process Utility Load Summary

	Administration Office	OPV Batch/Fill/ Pack	DTP Batch/Fill/ Pack	QC Testing Laboratories	Vivarium	Support / Warehouse	Totals
Water Demand in Liters per Day							
WFI	-	1,200	12,000	-	-	w/DTP	13,200
Clean Steam	-	2,100	4,500	-	-	w/DTP	6,600
Pure Water	-	5,000	20,000	-	-	-	25,000
Non-Potable	-	1,000	1,000	100	1,000	6,400	9,500
Potable	3,300	3,300	2,700	3,300	1,100	3,200	16,900
Total at Building Entry	3,300	9,300	23,700	3,400	2,100	9,600	51,400
(Gallons per Day)	(857)	(2,416)	(6,156)	(883)	(545)	(2,494)	(13,351)
Steam Demand in Kg per Hour							
WFI Stills	-	40	330	-	-	-	370
Clean Steam	-	559	1,194	-	-	-	1,753
Other Equip.	-	367	284	311	104	78	1,144
Totals	0	966	1,808	311	104	78	3,267
(Pounds per Hour	(0)	(2,125)	(3,978)	(684)	(229)	(172)	(7,187)
Compressed Air Demand in Liters per Minute							
Batch Tanks	-	1,274	1,274	-	-	-	2,548
Controls	187	224	215	235	224	614	1,699
Totals	187	1,498	1,489	235	224	614	4,247
(SCFM)	(7)	(53)	(53)	(8)	(8)	(22)	(150)
Electrical Demand in Kilowatts							
Process Cooling	-	26	260	-	-	50	336
Process Motors	-	140	150	260	95	190	835
Miscellaneous	88	21	21	31	21	65	247
Totals	88	187	431	291	116	305	1,418

6. Building Utility Load and Consumption

The following two tables define estimated building utility system loads and projected annual building utility system consumption. The load data was used as the basis for designing the building utility systems and therefore estimated facility cost as well. The projected utility consumption data was used to estimate facility operating cost.

ıg / Load Summary

	Administration Office	OPV Batch/Fill/ Pack	DTP Batch/Fill/ Pack	QC Testing Laboratories	Vivarium	Support / Warehouse	Totals
Steam Demand In kg per hour							
Potable Water Heating	104	104	83	104	33	98	526
Building Envelope Heat Loss	86	104	101	90	117	286	784
Ventilation	-	85	85	1,902	2,488	601	5,161
Reheat	196	1,412	1,412	514	673	1,392	5,599
Humidification	53	378	378	551	720	373	2,453
Deareation and Makeup Water	35	211	211	313	405	234	1,408
Totals	474	2,294	2,270	3,474	4,436	2,984	15,931
(Pounds/Hour)	(1,043)	(5,048)	(4,993)	(7,642)	(9,759)	(6,564)	(35,049)
Electrical Demand In Kilowatts (Annual Average)							
Lights	36	34	52	56	53	91	322
Fans	40	358	358	130	170	283	1,339
Pumps	6	38	38	59	77	51	269
Air Compressors	2	18	17	3	3	7	50
Boilers	1	5	5	7	8	6	32
Chillers	30	241	241	173	227	261	1,173
Towers	2	19	19	13	17	20	90
Miscellaneous	19	23	22	46	23	63	196
Totals	136	736	752	487	578	782	3,471
Emergency Electrical Demand In Kilowatts							
Lights	9	8	13	14	14	22	80
Fans	-	225	225	60	100	20	630
Heat/Cool Equip.	20	20	20	20	215	58	353
Freezer/Chill Rms	-	38	9	-	-	-	47
Process Loads	25	50	30	50	-	5	160
Totals	54	341	297	144	329	105	1,270

Projected Annual Utility Consumption

	Administration Office	OPV Batch/Fill/ Pack	DTP Batch/Fill/ Pack	QC Testing Laboratories	Vivarium	Support / Warehouse	Totals
Water							
Cubic M/Yr	838	1,981	5,258	664	533	2,438	11,912
CCF/Yr	296	700	1,858	305	188	861	4,209
Steam							
KG/Yr	738,578	8,869,370	9,719,948	8,164,224	10,154,174	9,192,601	46,839,395
Lbs/Yr	1,624,872	19,513,714	21,383,886	17,961,293	22,339,183	20,223,722	103,046,669
Natural Gas (If Boilers are used)							
GJ/Yr	2,210	26,542	29,085	24,430	30,384	27,507	140,157
MMBTU/Yr	2,095	25,158	27,568	23,156	28,800	26,073	132,850
Fuel Oil (Standby Generators)							
Liters/Yr	713	4,502	3,921	1,901	4,343	1,386	16,766
Gal/Yr	188	1,189	1,036	502	1,147	366	4,430
Electrical Consumption in Kilowatt-Hours							
KWH	387,934	3,275,360	3,571,087	2,153,970	2,408,706	3,308,285	15,105,342
KW Demand	*224*	*923*	*1,183*	*778*	*694*	*1,087*	*4,889*

Abbreviations

Cubic M/Yr = Cubic Meters per Year
CCF/Yr = 100 Cubic Feet per Year
KG/Yr = Kilograms per Year
Lbs/Yr = Pounds per Year
GJ/Yr = Billion Joules/Year
MMBTU/Yr = Million British Thermal Units per Year
Liters/Yr = Liters per Year
Gal/Yr = Gallons per Year
KWH = Kilowatt-Hours
KW Demand = Electrical Demand in Kilowatts (Average)

Section V

EXISTING SITE ANALYSIS

V. Existing Site Analysis

A. Site Selection

LPB and Flad personnel visited and evaluated several sites around the Moscow area. The sites visited included the Institute of Applied Microbiology, a biologicals weapons manufacturing facility at Obolensk, two research institutes, Institute of Immunology at Lyubuchany and the Institute of Poliomyelitis and Viral Encephalitis in Moscow, and Micron Plant, a semiconductor facility at Zalenograd.

The site selection was based on requirements which were necessary for building a new facility to meet current U.S. GMP and FDA regulations. The selection criteria included the following:

- Availability of land for construction,
- Skills and expertise of the site personnel in biological sciences and production and quality control experience,
- Site characteristics such as age of site, location relative to Moscow, accessibility to plant by road, train, airports, appearance,
- Infrastructure such as building and support services such as electrical, water, gas, and security,
- Housing and amenities such as schools, shopping, day care, etc., and
- Intangibles such as reputation of the site/institute, level of cooperation and trust, flexibility/resistance to change, entrepreneurial spirit, etc.

LPB chose not to identify greenfield sites or renovate existing facilities since both would be more costly. Renovations of existing facilities although achievable did not necessarily guarantee that desirable quality could be attained.

Each of the above categories were ranked by importance to determine the best fit for the vaccine business. The results of the evaluation are provided below.

1. Institute of Applied Microbiology, Obolensk Site

This facility was used for biologicals weapons research and manufacturing by the military prior to the breakup of the Soviet Union. Although, land and infrastructure are available and good scientific personnel could be potentially available for vaccine research and manufacturing, this

facility was not chosen due the major concern for biological contaminants on site and the potential environmental problems and impacts associated with such. In addition, this site is the furthest distance from central Moscow (90 km SW) and >120 kilometers from the Sheremetyevo International Airport which made the logistics for transporting personnel and materials more difficult. The staff at the site appeared uncomfortable with our visit and were quite reserved when speaking with us about their facility.

2. Micron Plant, Zalenograd Site

The Micron plant which has 7000 employees manufactured semiconductors for the military. Although the facility itself is quite large, only the shell of an existing building was available for use. This area was not sufficient for vaccine production and would require extensive renovation . This site was eliminated due its site characteristic and the lack of qualified scientific personnel with expertise in the biologicals/vaccine area.

3. The Institute of Polio, Moscow

This Institute has the most qualified personnel in terms of scientific expertise in research, development, manufacturing, and quality control. Since this site has been producing polio vaccine for the last forty years continues to do so today, they are already familiar with manufacturing processes and could be more easily trained in GMPs and new technology. They claim to manufacture polio vaccine which meets World Health Organization (WHO) regulations and attempts have been made to institute GMPs. The major disadvantage of this site is the lack of available land for expansion and unlikelihood of acquiring more since the Institute is in the middle of the environmentally protected "Greenbelt". The government has restricted new development in this area. The Institute's research/production staff are extremely strong in viral vaccines but the institute did not show any interest in manufacturing or development of bacterial vaccines on their site.

4. Institute of Immunology, Lyubuchany Site

The final selection was the Institute of Immunology located at Lyubuchany in the Chekhov District of Russia. The Institute has been in existence since the mid 1980's and was and is currently involved in research for vaccines against biologicals warfare as well a small scale production of genetically engineered bioproducts, monoclonal antibodies, synthetic peptides, and diagnostic kits. Research includes interferon, interleukin-2, recombinant hepatitis B, vaccinia and

antitularemic vaccines. The site is 60 kilometers from Moscow proper and is easily accessible by road or train from Moscow. Since no housing is provided on site, this site is close enough to Moscow for scientists and potential expatriates to commute to the site.

The Institute has a staff of 200 scientists whose strengths are in immunology, physiology, analytical biochemistry and preclinical/clinical trials for mainly bacterial vaccines. They have little vaccine manufacturing, quality control, and GMP experience. However, the personnel we met were extremely cooperative and enthusiastic about working with us on this feasibility study. They are anxious to find new partners to create joint ventures and privatize their institute. Most importantly, the site had enough land availability for construction of a new facility and existing infrastructure to meet the facility needs. The remainder of this section will focus on the specifics of the site for the construction of the vaccine manufacturing facility.

B. Site Assessment

1. Site Location

LPB chose the Institute of Immunology (IoI) as the site that should be investigated in this evaluation. Representatives of LPB, Flad, AEI, ERM, JBEC and Saphec visited the proposed site at IoI to review the issues (constructability, cost, schedule, site, environmental) associated with building the proposed facility at this location.

Surrounding Site Character and Uses

(See plan labelled "Regional Map" in this section)

The Institute of Immunology site is located in a predominantly rural, agricultural area approximately 40 KM south of the Moscow Ring Road. Specifically, the site is in the Town of Lyubuchany, in the Chekhov district, in the Moscow region of Russia. The surrounding land use is mostly pasture and other farm land, with small farming and dacha communities dotting the landscape. Areas not used for farming, such as the area north and east of the site remain in woodland, with birch and spruce species predominating. A small river runs northward along the west property line of the Institute through this wooded area. The elevation of the river is more than 20 meters lower than the Institute proper, therefore, flooding is not a concern. The proposed site drains to this river via a ravine that runs north of the site.

The village center of Lyubuchany is approximately 3 KM south of the Institute site. This village consists mainly of residential areas, including housing for the Institute. In addition, there is a small 25 bed medical clinic, a social club/library, and a substantial plastic molding company within the village.

Approximately 7 KM west of the Institute, the town of Stolbovaya is located. This community includes a railway station and several industrial plants such as metal recycling facilities, aluminum extrusion and assembly, and metal fabrication.

Chekhov, the nearest larger town, is located approximately 20 kilometers south of the site. This community offers a full range of facilities and amenities, such as a 400 bed hospital, anti-fire brigade, a printing plant, other industries, etc. About 20 people from the Institute staff live in this city, and commute to work.

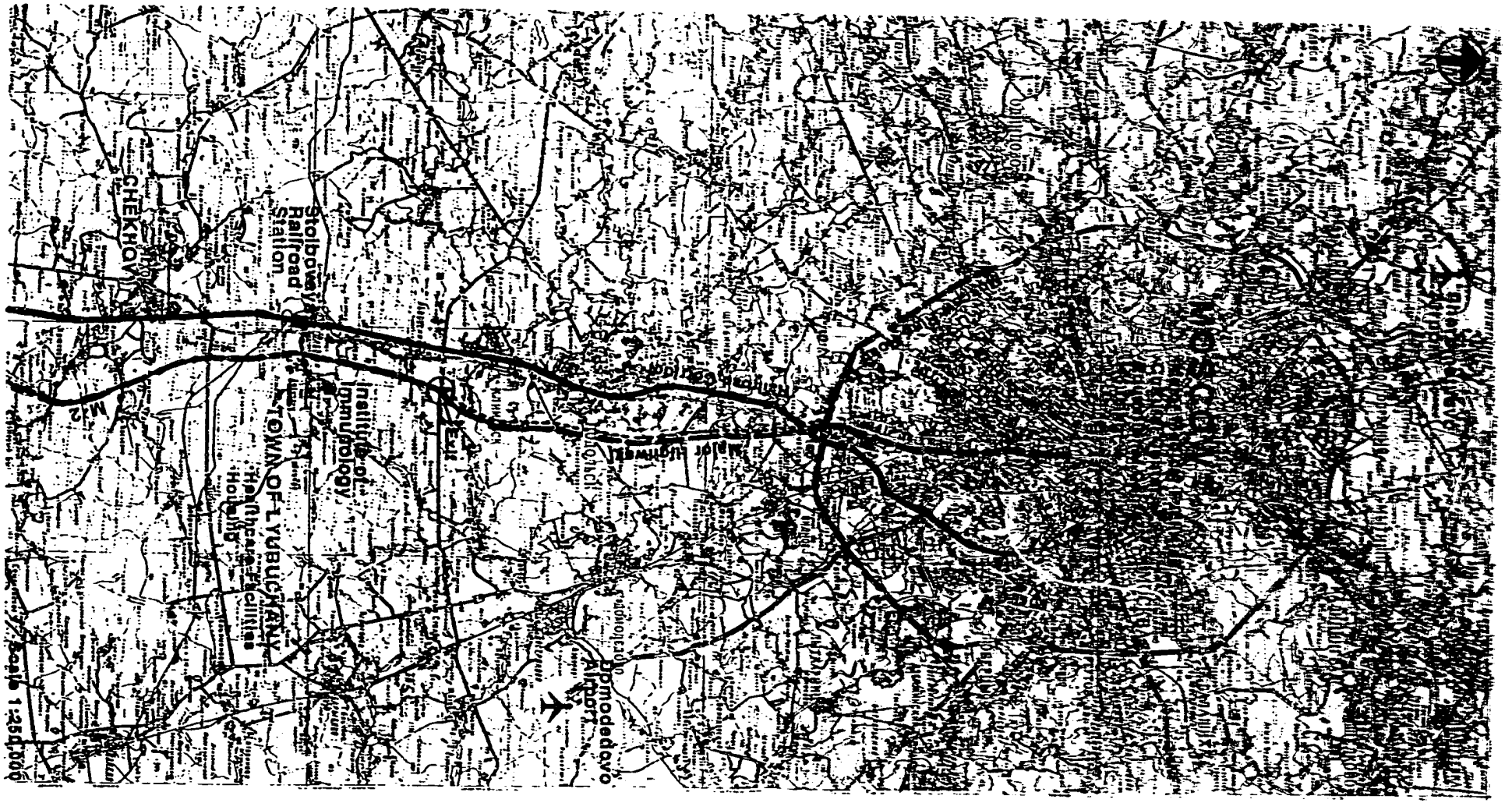

Regional Map
Lyubuchany Region

Flad & Associates, Inc. 5.05
NIS Feasibility Study, 92210-00

Moscow, with over 10 million residents, is the nearest major metropolitan area. This city provides a full compliment of social and cultural amenities, as well as major medical facilities, scientific communities, transportation facilities, and educational facilities, including the University of Moscow. Governmental Institutes and Ministries are also centered in Moscow.

2. Site Conditions

(See Site Analysis plan on the following page.)

Size:

The existing Institute of Immunology site at Lyubuchany consists of approximately 11.3 hectares (28 acres) of land. Currently, approximately 6.1 hectares (15 acres) of this total is enclosed by the Institutes fencing, and is developed for Institute use. Beyond the fence, the remaining 5.2 hectares (12.75 acres) is located to the east and north. Approximately 1 hectare (2.6 acres) of this land has recently been set aside for use by the Cristall Distillery vodka bottling facility presently under construction at the northwest corner of the property, leaving approximately 4.2 hectares (10.2 acres) available for use.

The Institute does not actually own the land, but has an agreement for use, and can "give" the land in a joint venture arrangement. The Institute can also acquire additional adjacent lands if needed.

Soils:

The soils on the site consist mainly of heavy moraine clays with poor drainage characteristics. Depressions at the surface will hold water for long periods of time. The depth of the water table has been identified in previous investigations as 12 to 13 meters below grade, though small water containing sand lenses occur nearer the surface. Water was observed in manholes at no more than 2 to 3 meters down.

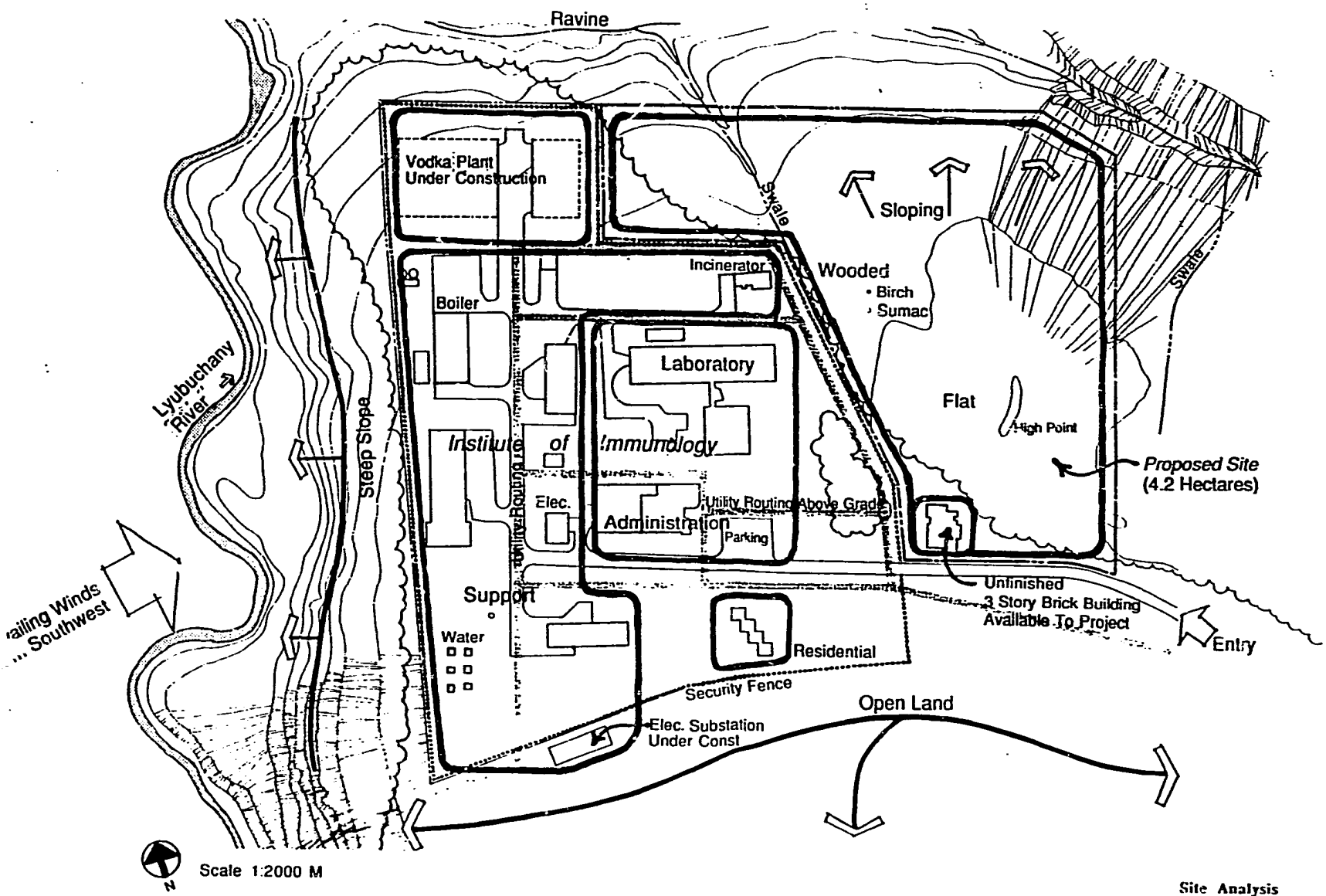

Site Analysis
Lyubuchany Site

Flad & Associates, Inc.
NIS Feasibility Study, 92210 00

5 07

The previous project, which was based on Russian design guidelines on this site, highlight the need to inspect every foundation excavation for soil variation before casting foundations at 5 meters depth with 300kN/m^2 bearing capacity. It would be easier to pile the site than dig to this depth! Piling to the underlying moraine sands would be the best option but is unwarranted for the 3-story complex proposed. However with this degree of uncertainty over inclusions within the loam, the Russian design figure is considered to be over optimistic and a bearing capacity of 225kN/m^2 at a minimum depth of 2 meters is proposed. This depth is somewhat deeper than the frost penetration depth of 1.4 meters but is beneath the overlying "fill" layer.

Site Character:

The parcel of land currently within the Institute fence line is predominantly flat, cleared land, developed with a series of 1 to 3 story buildings and associated roadway and infrastructure. Due to the current economic difficulties being experienced by the Institute, the facilities and grounds are in a state of disrepair, with little on-going maintenance occurring.

The 4.2 hectare parcel available for development is currently densely forested with birch and spruce trees except for the very southerly portion. A small area has been cleared for a three-story brick building constructed in the late 1980's. (This building is currently unfinished, with construction being halted prior to enclosure of finish work). The topographic relief of the site is fairly minor. The southern 2/3 of the site is predominantly flat, while the northern 1/3 fails away approximately two meters toward the property line.

Existing Facilities:

A plan detailing the use of buildings in the current facility is shown on the plan labeled "Existing Institute Plan" in this section. It includes the Institute of Immunology's (IoI) operation as well as the two buildings for the Vodka Bottling joint venture which are under construction.

The main operations buildings at the IoI are the two lab buildings and the Administration building which are all in the center of the campus. Support facilities wrap around the west and north sides of these buildings.

The new electrical substation which is partially complete is at the southwest corner of the campus.

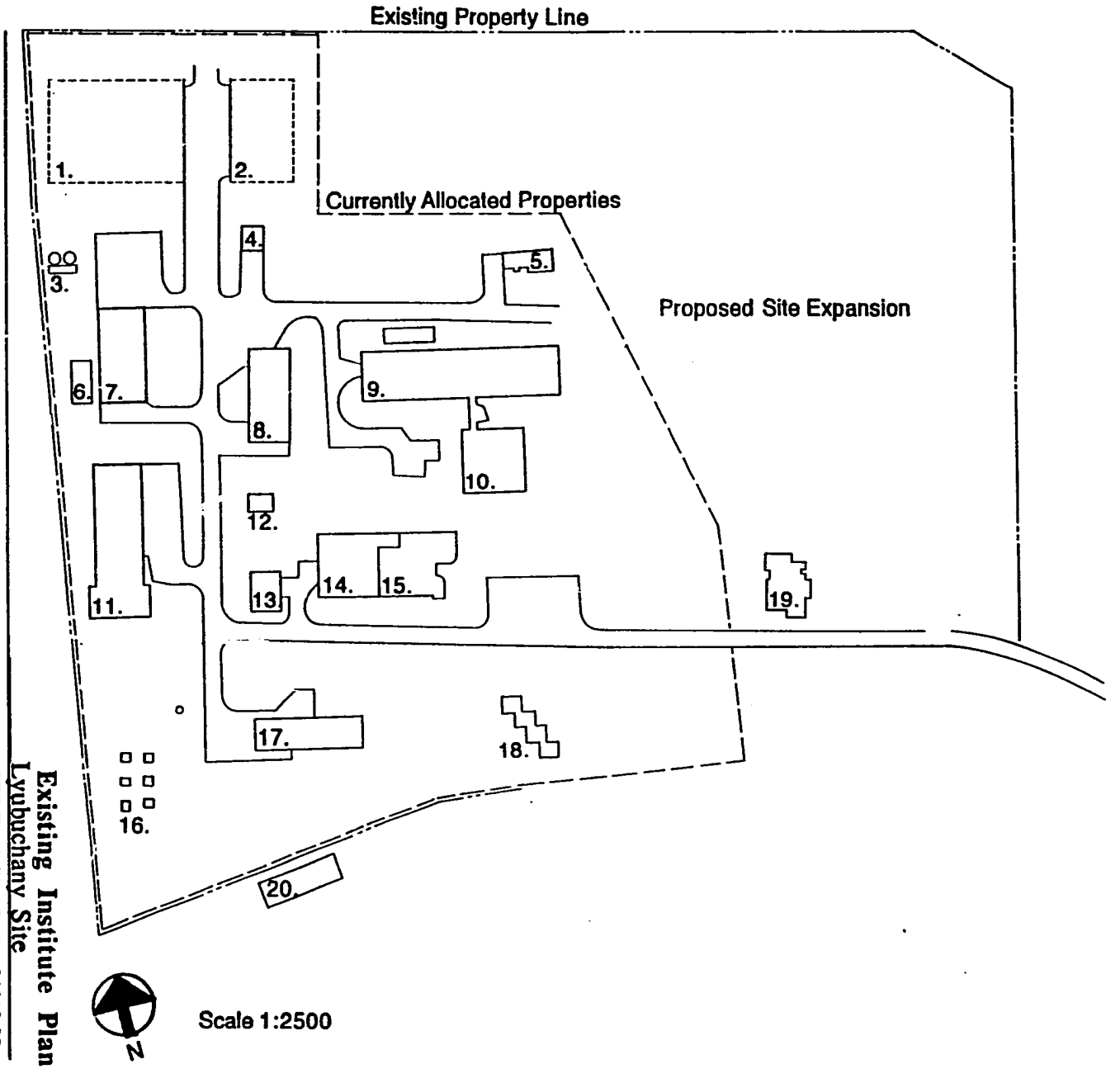

Existing Buildings

1. Vodka Bottling Facility Bottle Forming and Filling. (Under Construction).
2. Vodka Bottling Facility Administration and Storage. (Under Construction).
3. Hot Water Storage Tank
4. Waste Water Pump
5. Incinerator
6. Salt Storage
7. Boiler Plant
8. Warehouse
9. Lab 1
10. Lab 2
11. Garage
12. Gas Meter
13. Electrical Substation
14. Cafeteria
15. Administration
16. Domestic Water Wells
17. Water Purification (Iron Removal)
18. Executive Housing
19. Vacant Structure
20. New Substation

Existing Institute Plan
Lyubuchany Site

199

The vacant building which has been proposed by IoI for use by this project is at the right, or east side of the campus, currently outside the precast concrete security wall. (The wall is shown in the bottom photo on the page labeled "Site Photos" in this section. A corner of the site is shown in the top photo on the same page.)

3. Climate

Government standards and regulations identify the Lyubuchany area as being in the "continental (mild)" climatic zone. The following data was collected from records by John Brown/Saphec:

Summer temperatures:	+37° C (98.6° F) maximum
	+22° C (71.6° F) design average
Winter temperatures:	-42° C (-43.6 F) maximum
	-15° C (5° F) design average
Heating period:	230 days/year
Snowfall (water equivalent):	528 mm/yr. (20.78"/yr.)
	61 mm (2.4") maximum/day
	100 kg/sq. m design snow load
Rainfall:	699 mm/yr. (27.5"/yr.)
	80 mm/hr. (3.1"/hr.) maximum
	50 mm/10 min. (1.97"/10 min.) maximum intensity
Wind:	Prevailing wind southwesterly
	4.4 m/sec. (9.8 mph) average
	23 kg/m^2, maximum 60 kg/m^2 maximum design wind load
Relative humidity:	54% summer
	83% winter

Site Photos

View to North
Institute of Immunology Site, Lyubuchany, Russia

Note the birch woods that currently occupy the proposed site.

View to West
Institute of Immunology Site, Lyubuchany,Russia

The current facilities sit in a campus-like density.

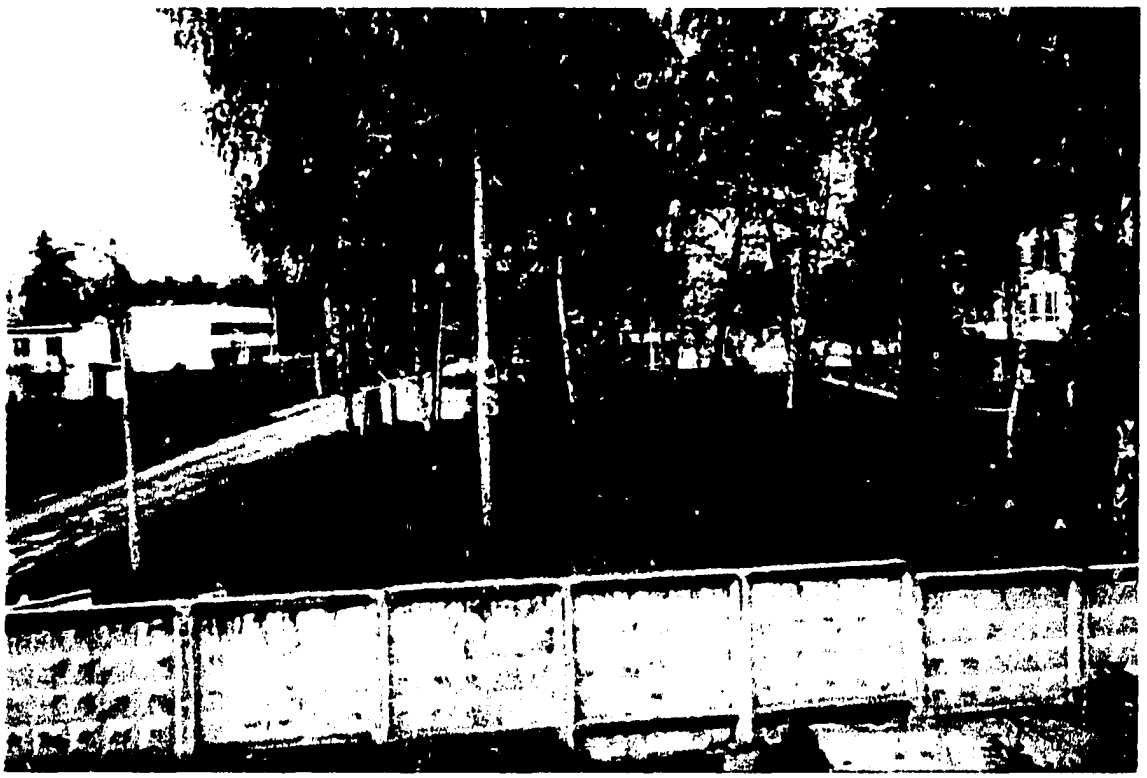

4. Infrastructure

General

The site receives primary utilities, natural gas and electricity, from the regional area gas and electric suppliers. Water for domestic, process and fire protection use is obtained from on-site wells.

Waste is removed from the site by four means. Ordinary solid waste is trucked to a local landfill, lab waste is incinerated on site, sanitary sewer waste is pumped to a municipal treatment facility and storm water is discharged to grade and either percolates into the ground or runs off to an adjacent stream.

Other secondary utility systems, including steam, heating hot water, domestic hot water and compressed air are produced on-site in a central boiler plant and distributed throughout the site in an underground inaccessible concrete pipe chase. Accessible manholes are located at branch and section valve locations in the distribution system.

System condition and reliability varies from poor to good and is rated on an individual system basis in this report. Utility system records and drawings appear accurate and are kept up to date. Site operating and maintenance personnel appear very competent and skilled. Maintenance of systems appears to be on a failure mode basis. All primary equipment is kept in good working order. It appears that when backup equipment has failed, it has been disconnected and left out of service. It would appear that this course of action is a result of a lack of sufficient maintenance funding, requiring expenditures only on critical equipment and systems.

Primary Utilities

Natural Gas

Natural gas is delivered to the site from the regional gas utility through a direct-buried 100 mm diameter pipeline at a pressure of 12 atmospheres. It is metered on site and reduced in pressure to 6 atmospheres and piped to the boiler plant and the incinerator building. An additional reduction in pressure to 500 mm of water is made at the meter house and piped to the lab and the director's residence for use.

-02

The capacity of the system is adequate for the existing requirements and projected new facility needs. Consumption is presently limited to 120,000 M^3/month by the regional utility supplier. The gas supply is classified as "firm" (not interruptible) source of high reliability. The piping system is asphalt-coated steel and provided with cathodic protection.

It is recommended that the new facility gas supply be connected to the 6 atmosphere distribution pipeline and provided with independent submetering.

Electrical Power

Electrical power is brought to the site by two 10 kv direct buried primary feeders. Two 630 kva transformers convert the supply voltage to 380 volt/3 phase and 220 volt/single phase for site distribution and final use. A 200 kva diesel generator provides emergency power for the boiler plant, waste water pumping station, water treatment plant, communications, alarms and lab freezers during power outages. A two-day fuel oil supply for the generator is stored in an underground tank.

Present system capacity is adequate to serve the institute and the first phase of the vodka bottling plant. However, the underground primary feeder is unreliable during periods of high ground water in spring and fall causing power outages. Construction of an overhead 110 kv transmission line direct fed from the local utility substation to the site was partially (40%) constructed before funding ran out. This system will need to be completed before a reliable power system with adequate capacity for the site can be assumed.

It is recommended that the new facility be fed from the 110 kv system. This will require the installation of a 110kv/10kv transformer at the new substation and a 10kv/380v/220v transformer at the new facility.

Telephone

The site has access to 20 telephone lines and presently uses two. There is adequate telephone capacity for use at the new facility. Consideration may be given to the installation of a satellite link for telephone and fax communication outside Russia. It may be possible to connect by microwave link to existing satellite systems in Moscow (e.g., Combelga, Comstar).

Water

Water for domestic process and fire protection use is produced on-site by six wells approximately 100 meters deep with submersible pumps. Water is treated through an iron removal and filtering process and stored in two buried 250 M^3 tanks. It is then pumped out into a looped site distribution system. System pressure is controlled by a 150 M^3 water tower 33 meters tall. A separate set of manually-operated pumps provide water flow at 13 atmospheres for yard hydrants and building fire hose cabinets through the domestic piping system loop.

The existing system capacity is 1500 M^3 per day and present average usage is 500 M^3 per day. The future impact of the vodka bottling plant is not expected to exhaust the water supply. At least one of the wells is scheduled for replacement. The looped piping system with manhole access to valved branch lines is a reliable and maintainable piping system.

It is recommended that the existing wells be inspected and upgraded as required. Since water usage at the new facility is small (30 M^3/day) compared to the site system capacity, the new facility could be connected to the existing upgraded system. A separate water storage tank and fire pump should be installed to serve the new facility.

Sanitary Sewer System

The site is presently served by an underground gravity sewer system that is collected at an on-site pumping station. It is then pumped to the municipal waste treatment facility in the nearby town of Lyubuchany.

The on-site pumping system has excess storage capacity and duplex pumps for backup.

It is recommended that the new facility be connected to the existing gravity piping system adjacent to the proposed construction site. The capacity and reliability of both the gravity and pumped systems appears adequate for future needs.

Storm Water System

Storm water discharge from existing roofs and paved areas is presently discharged to grade, where it either percolates into the ground or runs off to the adjacent waterway.

It is recommended that the new facility be treated in a similar manner.

Solid Waste Removal

Ordinary solid waste is presently trucked to a local landfill and lab waste is incinerated on site. Both of these systems appear to meet local regulations and should be adequate to serve the new facility.

Secondary Utility Systems

Steam, heating hot water, domestic hot water and compressed air are produced at an on-site boiler plant. The capacity of these systems is inadequate to serve the new facility. Because the size of new loads exceeds existing plant capacity and the plant has no provision for expansion, it is recommended that these systems be produced in a new central utility plant to serve the new facility.

5. Transportation

(see "Regional Map" in this section)

Roadways

The Institute is directly accessed over rural, paved, two lane roadways. These roadways are in somewhat marginal condition, but evidence exists that maintenance and repair are occurring. In the Town of Lyubuchany, a new road bed was being prepared to replace a deteriorating winding section of roadway.

Although Highway M-2, a major north-south interstate runs only 1.5 KM west of the Institute, there is no direct connection. One must travel approximately 10 KM on rural section roadways to access the M-2. The M-2 is a major trucking and commuting corridor running from Moscow south through Chekhov to southern Russia, the Ukraine, and the Crimea on the Black Sea. The M Highway system is a series of 10 major roadways radiating out from the center of Moscow to connect with the rest of the country. Additionally a series of concentric ring roads encircle the City of Moscow, connecting with the radial system. This roadway pattern offers a fairly comprehensive distribution system for materials, product, and people transport to Russia, and its neighbors.

Railway

A rail line passes approximately 5 km to the west of Lyubuchany. A rail station located at Stolbovaya is easily accessible from the Institute. Staff that live in both Chekhov and Moscow commute by train to this point, and are bused from there to the Institute. This rail is also apparently used for freight hauling, as evidenced by the metals industry built up around this station. Distribution to many parts of Russia would be possible by rail from this station or from Moscow.

Air Travel

The main international air terminus for the Moscow region is Sheremetyevo Airport, northeast of Moscow. By road, this facility is approximately 100 km distant from the Institute at Lyubuchany. Presently, all visitors or materials and supplies, imported from the United States or Europe would arrive here, and then reach Lyubuchany by roadway.

Another large airport is located at Domodedovo, approximately 30 km east of the Institute. At present, this facility has no customs office, and, therefore, cannot be used for international travel or shipping. British Airways is currently undergoing negotiations with Russia to open this facility to International travel. This would reduce the overload that Sheremetyevo has been experiencing in recent years, and provide very easy international access to Lyubuchany.

6. Permits and Zoning

Review Process

Project review requirements and permitting process currently appear to be in flux in Russia, due to recent and ongoing political changes. Ministry and design institute responsibilities are being re-defined as the government is re-organized and privatization becomes more widespread. For these reasons, it is difficult to map out a review and permitting process at the time of this writing with any expectation of validity even in the near future.

At this time, it appears that the majority of review and permitting responsibility rests with the local governmental units - in this case the Town of Lyubuchany and the District of Chekhov officials. As the Institute of Immunology is still considered a governmental unit, under the auspices of the Ministries of Health, it is also possible that any joint venture development on its property or that uses federal funds, may require review at the federal level.

At the local level, a series of committees will review the concept proposed for development, and then set guidelines for the project. They will also review construction documents and inspect the construction process. Local committees may include fire and hazard, sanitary, security, architecture, and environmental protection. These committees will base their review on federal as well as on local requirements. As part of negotiation for approval from the local government, it is apparently normal practice that they require the developer to build some form of needed amenity or resource for the community, such as additional housing, heating capacity, etc.

The environmental protection committees appear to be very strong in Russia, focusing mainly on air and water pollution and solid waste disposal issues. As part of a project, a report must be submitted to the committee for review and approval indicating proposed levels and concentrations of pollutant and waste output for the facility. Based on this report, an

environmental defense zone will be determined for the project indicating the distance in radius that the facility must be separated from other uses or residential areas. The minimum distance of such a zone is typically 300 meters.

Zoning of Land Use Standards

Zoning regulations do not exist in Russia as they do in the United States. Land use restrictions are set by local authorities, and environmental defense zones provide separation between uses. Setbacks from property lines, floor area ratios, landscaping requirements, and other standards do not appear to exist. A minimum site coverage of 30% for planned buildings has been required for land appropriations in the past to limit overzealous land requests. As the Institute already has agreement regarding use of the land, this should not be of concern. A request for additional land, however, may need to take this into account.

7. Site Survey Check List

Date:	June 1993
Site:	at Institute of Immunology (IoI)
Address:	142380 Lyubuchany, Moscow Oblast, Chekov Region, Russia.
General Description of Site and Surroundings Characteristics:	The proposed site is located within the IoI compound. It is an area of open scrub and some trees, mainly level.

I. SITE

	Data Source:	Visit to site and IoI records.
A.	Location:	3km from Lyubuchany village, approx. 60km south from center of Moscow, off A-95 road.
B.	Size of Property:	5.2 hectares additional land can be made available outside existing perimeter wall of IoI.
C.	Soil Bearing:	225kN/m² (See attached Summary Soil Report).
D.	Water Table:	Seasonal from 1 to 10m below surface but sand lenses containing water are randomly distributed around site at depths of 3.2m to 4.7m below the surface.
E.	Frost Line:	1.4m below surface.
F.	Type of Soil - Rocky, Loam, Sand, Swamp, Wooded or Clear:	Fluvio-Glacial loam with dust, sand and gravel inclusions and lenses of depth from 8 meters upwards overlying fine sand moraine. (See attached Summary Soil Report).
G.	Buildings on Site - Type, Size, etc.	None on proposed site; outside perimeter there is one partially complete three story brick building.
H.	Topography - Evaluation of Amount of Grading, Excavation or Fill Required, Drainage Patterns:	Site area sloping approximately 1 metre surrounded by steep sided ditches and valleys approximately 15 meters below site levels. Grading will be required only if new facility is constructed towards northern perimeter; quantity of fill will depend on final design; the site drains towards a small river but existing structures impede natural drainage and there is standing water for some time after precipitation.

VACCINE PLANT FEASIBILITY STUDY

RUSSIA

ATTACHMENT TO SITE SURVEY CHECK LIST - ITEM I F

SUMMARY SOIL REPORT

The soil conditions at the above site are far from ideal being largely glacial loams overlying glacial moraine. These soils are usually variable, as here, in constituency and particularly inclusions.

The Russian design guidelines for the previous project on this site, attached to the site data provided, highlight the need to inspect every foundation excavation for soil variation before casting foundations. In addition these guidelines apparently placed foundations at 5 meters depth with 300kN/m² bearing capacity, it would be easier to pile the site than dig to this depth! Piling to the underlying moraine sands would be the best option but is unwarranted for the low rise complex proposed. However with this degree of uncertainty over inclusions within the loam, the Russian design figure is considered to be over optimistic and a bearing capacity of 225kN/m² at a minimum depth of 2 meters is proposed. This depth is somewhat deeper than the frost penetration depth of 1.4 meters but is beneath the overlying "fill" layer.

A further critical aspect is rainwater. Natural water table appears low (often below borehole depth) in summer months but ground porosity is too low to allow rain to be dissipated turning the loam into a "goggling" quagmire. It will therefore be essential to provide a method of preventing rainwater affecting the ground around structures either by 100% paving or partial replacement of the surface fill layer with a free draining material such as sand or gravel with land drains.

The vaccine plant however is characterized by low rise building with light equipment so the worst problems will not be realized.

I.	Location relative to railroads, power lines, gas lines, telephones, water, sewers:	- Nearest rail head 7.2km by road. - Power lines, gas lines, telephone lines, water and sewerage are all available in IoI compound within 50m-100m of proposed site.
J.	Property Map Including Contours and Legal Description:	See Map 039-0-V3-14.
K.	Restrictions to Land Use - Set Back Required, Limitation to 100% Land Use, Landscaping Required, Limitations to Building Height, Barrier Fences or Plantings Required, Aesthetic Limitations:	No specific restrictions exist on land use by Federal, regional or local authorities. Outside perimeter there is currently a 500m wide "protection" zone in which no industrial or domestic development is permitted. Landscaping, building elevations and other aesthetic consideration can be determined by the site user but are subject to negotiated acceptance by local authority.
L.	Obtain Site Photographs, if possible:	Taken by Cyanamid, Flad, AEI and ERM.
M.	Vegetation (type and extent, location):	Open area of grass and scrub with secondary growth woods (Birch & Alder) in eastern part.
N.	Floodplain limits, wetland etc.	Site is at least 12m above max. flood height of the small river which is 80m from the IoI compound perimeter.
O.	Past use of Site - Potential for environmental contamination:	Proposed site had no previous use, except perhaps rough grazing for cattle.
P.	Adjacent uses - compatibility:	(i) Within perimeter - IoI carried out research and testing on vaccines including some to counter biological warfare. (ii) Outside perimeter - farmland for cereal and root crops, grazing, scrub

Q.	Distances (km) to amenities, workforce - scientific community, police and fire protection, healthcare and emergency services able to treat chemical emergencies, urban services, schools, housing, advanced education, warehousing:	(i)	Lyubuchany Village, 3km - Police Post - Hospital (25 beds) - School - Housing (for most of present workers at IoI)
		(ii)	Chekhov Town, 20km - Main Police Station - Hospital (400 beds) - Schools - Fire Brigade Station - Housing - Shopping Center
R.	Distances and direction to areas of nuclear activity: - Power Plants - Testing - Etc.		Kursk, 390km to south, major "NUKE". Experimental institution in Serpuchov, 40km to south. Research establishments in Moscow. 40km to north. Mothballed prototype 5000MW nuclear generator at Obninsk. 55km to west south west.
S.	Image/Security - public visibility, controllability of site access:		The site is in fairly open country and visible but in a sparsely habitated area and it is away from passing traffic at the end of a single track lane. There is no security gatehouse at present but one could easily be installed.
T.	Natural Site Features:		The site is mainly level ground which starts to slope down towards its northern edge. There is a wooded area on the eastern edge.

U.	Ownership/Land Lease Arrangements:	Previously all land belonged to the U.S.S.R. State now this ownership has passed to the Russian Federation. Formal Agreement for use of the site will have to be negotiated with the IoI who are effectively acting as trustees under the overall aegis of the Russian Ministry of Health.
V.	Cost of Land:	Not applicable, now that the IoI is not to be privatized.

II. CLIMATE

	Data Source:	GOST SNIP Nos. 2.01.01.-82 and 2.01.07-85 for "continental (mild)" climate zone.
A.	Summer maximum and minimum temperature: Winter maximum and minimum temperature:	+37° F (98.6° F) maximum +22° C (71.6° F) design average - 42° C (-43.6° F) minimum - 15° F (5° F) design average
	Heating Period:	230 days/year
B.	Snowfall maximum and minimum: (water equivalent mm)	528 mm/year, 61 mm/day max., nil min. Design snow load 100 kg/sq.m
C.	Rainfall maximum and minimum: Max. precipitation intensity:	699 mm/year, 80 mm/hour max. storm, nil min. 50mm/10 mins.
D.	Days of rain per year:	Not available.
E.	Days of snow per year:	Not available.
F.	Earthquake zone (seismic):	Not applicable - not a seismic zone.
G.	10, 25 and 100 Year 24 Hour Storm Rate:	Not specified in GOST.
H.	Wind direction - speed and frequency (wind rose):	Prevailing wind south westerly - av 4.4m/sec Standard wind load 23 kg/m²; max 60kg/m².
I.	Relative Humidity:	54% Summer 83% Winter

Direction:	N	NE	E	SE	S	SW	W	NW	Calm	
Frequency %:	9	8	9	14	14	22	13	11	6	January
Average Speed m/s:	3.3	2.5	3.6	4.3	4.3	4.3	3.9	3.6		
Frequency %:	17	13	9	8	6	12	17	18	8	July
Average Speed m/s:	3.1	3.1	2.6	3.0	2.9	3.1	3.3	3.3		

III. UTILITIES

Utility costs were provided by Mr. Sergey Zolotykh, Head of Capital Construction Institute of Immunology, reportedly valid June 1, 1993

A. Electric Power

Data Source:	Site visit and information from IoI.
1. Size and type of service and location relative to Site:	Spur from railway substation "Stolbovaya" located 10km away.
2. Overhead or buried service:	Buried - 2 x 10 kV lines; 110kV overhead lines have been brought to IoI perimeter but are not connected.
3. How distributed - primary and secondary services:	On site step down transformer - distributed as three phase 380v and 220v.
4. Quantity available:	2 x 630kVA; supply capped at 7500kVA.
5. Voltage and frequency:	10kV ±5% at 50Hz
6. Outage record:	Not recorded; supply is "red road" priority but outages have been caused by accidents to cable.
7. Frequency of lighting strikes, supply spikes - records:	None recorded.
8. Authority controlling:	"MOSENERGA" - the Moscow Region electrical supply authority.

9.	Time required to obtain service:	Not applicable - already available or if larger amounts require as long as it takes to install new 110/10kV substation and connections.
10.	Method of payment to bring service to site:	Cost of completing new facilities i.e. substation with 2 x 1600 kVA transformers.
11.	Cost (per kWh?)	7.1 Rbl per kWh. (per Mr. Sergey Zolotykh, IoI, June 1993) 2.0 Rbl per kWh. (Russian Petrochemical Complex, Jan. 1993)
12.	Rate structure, how is usage measured/metered:	Metered per kWh.
13.	How many sources:	One source.
14.	Emergency Supply	Standby Diesel Generator - 200kVA with autostart.

B. Gas

Data Source		As above.
1.	Size and location relative to site:	Natural Gas delivered to IoI complex by buried pipeline. 100mm dia; (6atg lines within IoI complex 150mm dia.
2.	Quantity available:	120,000m^3/ month.
3.	Pressure:	12 atg reduced on site to 6 atg and 0.2 atg.
4.	Firm or interruptable:	Firm supply.
5.	Cost/rate structure:	1,000 Rbl/1,000m^3 (per Mr. Sergey Zolotykh, IoI)
6.	History of outages:	None recorded.
7.	Heating value:	35-36 MJ/m^3 (Natural Gas)
8.	Authority controlling:	"MOSOBLGAS". The Moscow Oblast gas supply authority.
9.	Time required to obtain service:	None - already on site.
10.	Method of payment to bring service to site:	If required, cost of new facility from nearest source.

C. Water

Data Source:	As A. above.
1. Size and location relative to site:	6 artesian wells within IoI complex; capable of extracting 1500m^3/day total.
2. Quality available:	Potable to GOST standard - daily monitoring on site, weekly by Chekhov control).
3. Temperature and pressure:	5°C - 7°C and 3.5 atg - 4.0 atg.
4. Water treatment? Chemicals used?	Filters and Iron removal.
5. Analysis:	Not available, min GOST standard for potable water.
6. Time required to obtain service:	Not applicable.
7. Authority controlling:	Not applicable.
8. Method of payment to bring service to site:	Not applicable.
9. Dependability:	Good.
10. Cost, rate structure, how measured/method:	40 Rbl/m^3 (for treated potable water per Mr. Sergey Zolotykh, IoI) 1.5 Rbl/m3 (for recirculated cooling water for Russian Petrochemical facility)
11. Type of piping material:	Cast Iron 200mm dia. ring main (also serves as fire water supply).

D. Sewers

Data Source:	As A above.
1. Types - storm/sanitary combined or separate:	Sanitary sewerage system only - no storm water sewers - run off/soak away.
2. Size and location relative to site:	Two 200mm dia. pumped lines run from IoI complex.
3. Planned improvements:	None advised.

	4. System capacity:	260m³/h using two pumps - well in excess of current requirements. Existing Laboratory Building at IoI has a separate effluent treatment system not in use currently - extra capacity 400m³/hr is available.
	5. Elevation relative to Site:	Pumped from sumps to biological treatment plant at Plastic Factory 2.2km away.
	6. Authority controlling:	IoI.
	7. Regulations governing:	Russian Federal Regulations (SNIPs) enforced through Chekhov "SZS".
E.	Wells	See C. above.
F.	Fuel	Only Gas - see B above.
G.	Telephones	
	Data Source:	As A above.
	1. Lines available and location relative to Site:	20 lines available to IoI complex only 2 in use.
	2. Type - optic versus wired, overhead versus underground:	Underground telephone cable installed in tunnel.
	3. Authority controlling:	Moscow Telecommunication Authority.
	4. Regulations on use and installation:	Standard Russian Federal Regulations.
	5. Cost and rate structure:	Rbls 45,000/year for each number, local calls not charged, long distance and overseas charged extra.
	6. Lead time required:	Not applicable, already available.
H.	Telex	
	Data Source:	As A above.
	1. Availability:	Yes at IoI but internal Russian teletype system only.

2. Cost:	Not established; for any new facility a satellite 'phone/fax system should be used.

IV. TRANSPORTATION FACILITIES

A. Rail

Data Source:	Site visit and discussion with IoI
1. Distance to nearest siding:	10km, capacity up to 40t. Owned by Lyubuchany Plastics Factory.
2. Distance to hub-connection throughout country:	60-70km to Moscow Termini.
3. Maximum load size transportable:	See sketches 1 and 2 attached.
4. Regulations and rates:	Russian Federal Regulations.
5. Dependability of service:	Good, but declining at the moment.
6. Frequency of use:	Not normally used by IoI.
7. Cost of rail siding:	Not established.
8. Authority governing:	Not established.
9. Lead time required:	Not established.
10. Rates:	For use of nearest siding by negotiation with Plastics Factory. Freight rates currently low but increasing; rates will depend on volumes and type of materials transported.

B. Air

Data Source:	
1. Distance to nearest international air freight location:	120km to Moscow-Sheremetievo 2. Plans exist to upgrade Domodedovo Airport to receive international flights, this is within 30km of IoI.
2. Availability of Class A roads connecting to Airport:	Class A roads all the way from about 2km of IoI compound.

C. Road

-8

Allowable Rail Cargo Load Dimensions
(Millimeters)

Sketch 1

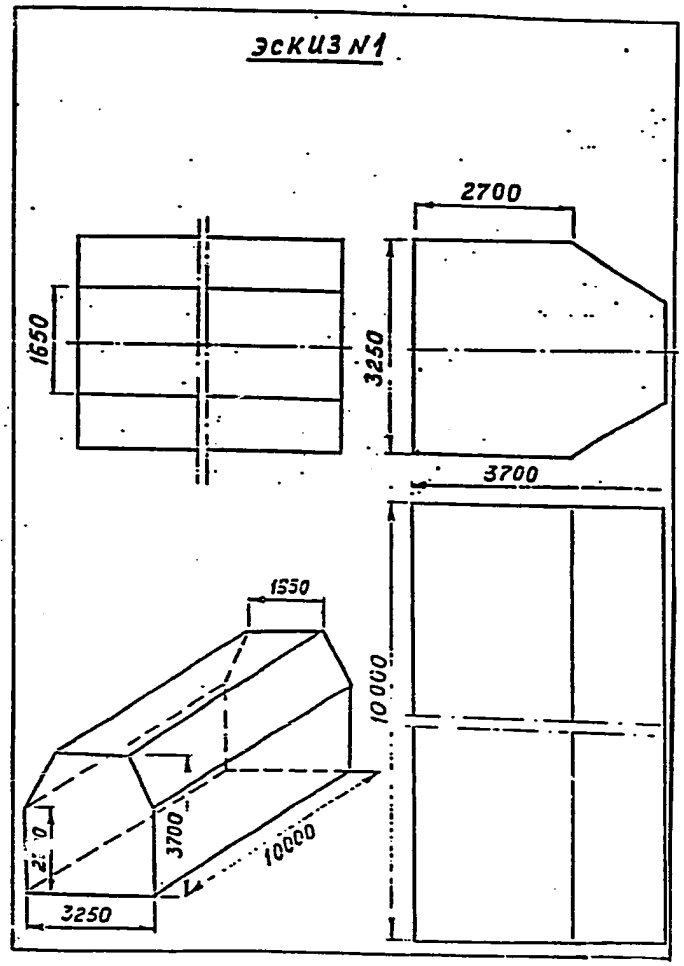

Sketch 2

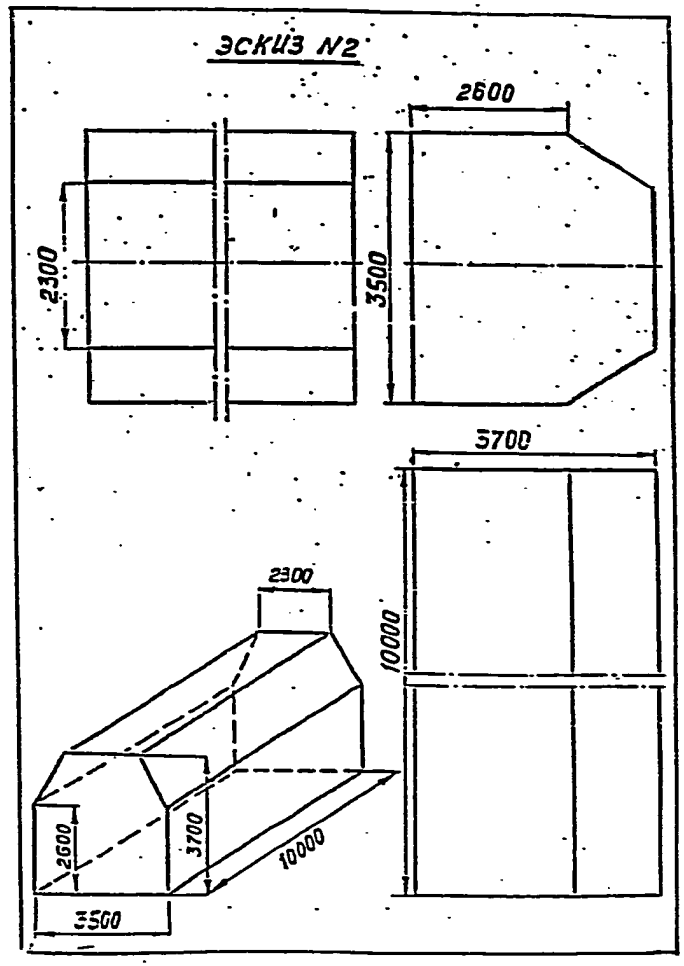

Data Source:	As for A.
1. Maximum load size and weight transportable:	40t (10t max. weight per axle).
2. Clearances of bridges:	4.5m.
3. Rates:	By negotiation.
4. Distance to "Interstate" type roadway:	10km to M.2 (A95) access.
5. Traffic controls enforced:	Yes by ubiquitous "GAI" - traffic police - maximum speed 120k/hr.
D. Port of Entry for Imported Equipment	Moscow River Port - 100km
Data Source:	As A above.
1. Regulations:	Russian Federal Regulations.
2. Customs:	Yes - import duties vary with class of material and frequently changed Government Edicts but for Government Approved Projects duties are not levied on imported capital equipment.
E. Barge	
Data Source:	As A above.
1. Frequency of Use:	Not normal, but could be used for imported heavy equipment.
2. Availability:	Depends on rates.
3. Distance from Site:	100km.
4. Rates:	By negotiation
F. Restrictions pertaining to transportation of dangerous raw materials, chemicals, and/or catalysts:	By rail: The transportation is regulated by "Norms of transportation of hazardous materials," Issue No. 340, dated 1987 (Section 42). By automobile road: The transportation is regulated by "Charter of automobile roads of Russian Federation," dated 1983.
G. Availability of labour transportation methods:	
Data Source:	As A above.

Mass transit, private auto, etc:	Virtually all staff arrive by IoI bus, some travel by rail and connect to bus. Only very senior staff have private autos.

VII. LOCAL CODES

Data Source:	"SAPHEC" J.V and discussion with IoI.
A. Obtain copies of building codes/ zoning:	Area zoning does not exist but proposed plans have to be accepted by local and regional authorities - through negotiation. Building Code SNiP 2.09.02-85 applies.
B. Governmental licenses and permits that must be obtained, data required, time required:	Product Licence and Manufacturing Licence Approval required, time needed to obtain these is six months minimum. Government permit to build is not required but see A above and E below.
C. Are firm price contracts and orders subject to increases if government establishes new wage and price basis?	Currently there is no statutory link but Contractors are likely to require a contract clause reimbursing them for any additional cost burdens inposed by Government
D. Insurance requirements:	No statutory requirements.
E. Extent of governmental review and drawing:	Review of various aspects of the initial design and final designs for acceptability will be undertaken by local and regional authorities. Such reviews include: Overall Site Plan & Architecture Fire Protection Water Services Environmental Protection Civil Defence/Security On completion the facility will be inspected for conformity to all relevant state Regulations by the State Factory Inspectorate. If satisfactory a Permit to Operate will be issued.
F. Professional registrations and timing:	Not required.

G.	Work permits required by foreigners:	Not required, entry visas only.
H.	Regulations of equipment and material import:	None for materials and equipment needed to construct facility.
I.	Environmental regulations and permits (air water quality and effluent controls):	Russian Federal Regulation will apply, in particular the "Sanitary" norms. The proposed discharges (content, quantity, contamination) must be approved by the Ministry of Health of the Russian Federation. Specific Regulations include: GOST 17.23.02-78, SN 245-71, SN 369-74.
J.	Hazard material and waste regulations and permits:	On site storage is controlled by norms covering explosion hazardous and inflammable materials.
	On-site Storage Controls required:	PDK and OBUV No. 3086-84 refers.
K.	Noise Abatement/Control:	Maximum noise levels for various exposure times are in accordance with Russian Federal regulations. In general these are not more onerous than standards prevailing in USA and western Europe. Sanitary (i.e., Health) Norm SN3223-85 details permissable levels and SNiPII-12-77 details noise reduction means.

VIII. LOCAL CUSTOMS AND PRACTICES

Data Source:		John Brown and "Saphec" J.V.
A.	Typical construction delivery, General Contractor, Construction management, single or multiple prime contractors:	Previously multiple prime contractors - normally the construction groups would belong to the same Ministry as the Operating Plant and Design Institute.
B.	Prevailing materials and methods of erection/installation:	For Buildings - Offsite Precast Concrete Sections erected with many tower cranes. For Plant and Equipment - "Stick" built on site.
C.	Employee amenities, i.e. type of facilities, sanitary facilities etc:	To suit labour force culture.

D.	Office decor:	Brown wood panelling and furniture, low lighting levels.
E.	Air conditioning:	Only where technological process or individual status require it.
F.	Type of contracts, normal, lump sum or unit price with quantity take-off:	Lump sum based on tonnage rates applied to virtually final detailed design; Tonnage rates applied to scope variations.
G.	Normal standards used, i.e. DIN ASA, metric versus English:	All measurements must be in the Metric System. Normal standards are Russian Federal, some of which are mandatory under law. For non-mandatory standards there is an increasing acceptance of other national codes, especially for imported equipment.
H.	Drawing language required (dual language documentation?)	Russian mandatory, second language optional to suit Owners requirements.
I.	Electric lines overhead or buried, conduit or cable trays, MCCs or starter racks, etc.	Main cable distribution around sites normally above ground racks with weather protection.
J.	Extent of inspection used in field, i.e. welding, pricing, concrete, etc. (Local government - authority level to stop work during construction?)	Whatever Owner provides; No local authority or federal inspectors until work is complete.
K.	Business/construction industry records for contractor pre-qualifications:	Do not exist; Contractors previously "owned" by Ministries for various industries; now all available for outside work.
L.	Payment for equipment, i.e. down-payment required, progress payments:	Usually 10-15% down payments for major items but in current circumstances may be necessary to pay sufficient in hard currency for manufacturer to secure raw materials.
M.	Are fabricate and install type contracts normally employed?	No.
N.	Extent of governmental field inspection:	None.

O. Board of Construction contractors and/or material suppliers:	Not applicable.
P. Transportation methods and availability - mass transit, private auto, pedestrian/bicycle etc.	Virtually all construction labour is normally transported in lorries or or buses to and from site. In some locations a local labour "camp" may be established within walking distance - particularly when convict labour was employed. Some "bosses" use their private autos.
Q. Maintenance Practices:	Under the previous regime, production organizations, research establishments etc. were provided with their own maintenance workshops and labor. Thus there were no outside specialist organizations undertaking contract maintenance work. This situation is changing gradually as previously "tied" maintenance groups look for organizations. For a facility built for a joint venture with IoI, it is reasonable to expect that routine maintenance and uncomplicated repairs would be undertaken by the existing IoI Maintenance Group. For more difficult tasks, especially on imported equipment it will be necessary to use visiting craftsmen - from the original Suppliers where possible.
R. Spared and Consumables, Inventories.	The quantities of spare parts and consumable materials held in stock needs to be significantly greater than those for equivalent facilities in the USA. This is due to the erratic nature of the supply of local manufacture (normally made in large, infrequent batches) and the time taken to order, pay for and then deliver and clear customs for imported items. For new plants in Russia a spares inventory level equivalent to between two or three years expected consumption is considered normal. This also provides a contingency supply for use during instrumentation, stationary and reprographic consumables etc. The minimum necessary stock level has to be determined depending on the source and supply routing for each category. For many items the situation is improving rapidly provided that payment can be made.

Similar considerations apply to the inventory levels of consumables such as lubricants, packaging materials, detergents, charts and inks for instrumentation, stationary and reprographic consumables etc. The minimum necessary stock level has to be determined depending on the source and supply routing for each category. For many items the situation is improving rapidly provided that payment can be made in hard (i.e. convertible) currency both for local and imported items.

X. LIVING COSTS (for expatriate staff)

Data Source:

A. Housing availability-average cost and rate structure:	Few premises are available for sale to non Russian nationals, property law is still in a state of flux.
(1) Apartments:	Rented accommodation in standard apartments is normally on a monthly basis payable in advance with agreed up front payment. Purpose built apartment and housing complexes are becoming increasingly available but are expensive and some demand up to three years rent payable in advance.
(2) Private dwellings:	
(3) Other:	
B. Normal size-garage, car storage utilized?	Garages not normally available, adjacent parking is a bonus, some secure compounds provided for expat. owners.
C. Rental cost of housing:	
(1) Furnished:	See "Unfurnished".

	(2) Unfurnished:	Can vary depending on location and quality between US $150 to US $5000 per month with little difference between furnished and unfurnished. For a standard acceptable to a US family say $2,500 per month.
D.	Availability of American School and Cost:	
	(1) Private versus public educational systems:	Anglo-American School in Moscow up to Grade 10. (Grades 11 in 1994). Children of American and British business nationals have priority entry (first priority given to Diplomatic Service families). Cost US $7,500 per year plus US $2,500 entry. All extra curricular activities are at extra cost.
E.	List of cost of food and services:	US $200 per week per person.
F.	Cost of Car Rental:	US $750 to US $1000 per month.
G.	Cost of Utilities:	Currently negligible usually included in renting costs.
H.	Cost of automobile insurance:	Typically about US$1,000 per year for a compact 2.0l vehicle.
I.	Income tax situation/property tax - how assessed:	

(i) Income Tax:-

Aggregate Taxable Income Roubles per year	Tax Due
Up to 1,000,000	12%
1,000,000 - 2,000,000	120,000 Rbl + 20% on income over 1,000,000
Over 2,000,001	320,000 Rbl + 30% on income over 2,000,000

(ii) Property Tax:-

This is usually included within the renting costs. For apartments or offices rented from the official UPDK organization at VAT of 28% is applied.

C. Environmental Assessment

1. Executive Summary

This report presents the findings and recommendations of a focussed environmental site assessment (Phase I ESA) conducted at the Institute of Immunology (Institute), Moscow Region, Chekhov District, Lyubuchany, Russian Federation, Commonwealth of Independent States. This assessment was performed to advise Flad and Associates (FA), Madison Wisconsin, and Lederle-Praxis Biologicals (LPB), Wayne, New Jersey, of potential environmental liabilities associated with the property, if any. This report is the summary effort of work performed to fulfill tasks specified in the Environmental Resources Management, Inc. (ERM) 8 March 1993 proposal number P-93-0295.

The site visit, historical and regulatory review, and other areas of this assessment were performed by Mr. Paul Morin, P.G., of ERM, Inc., Exton, Pennsylvania, and Mr. Jerzy Kollajtis of ERM-Polska, Warsaw, Poland. This Report of Findings was prepared by ERM, Inc. The site visit was conducted on 24-27 May 1993.

The scope of work defined for this project included an on-site investigation, general site characterization, a review of readily available site records, discussions with people familiar with the site history and environmental practices, and review of available regulatory information and documents from local, regional, and federal environmental ministries of the Russian Federation. The information obtained during this assessment is presented in subsequent sections of this report.

Based on the data obtained during the site inspection, subsequent limited regulatory review, and interviews with personnel familiar with the site and its history, the following are considered minor environmental issues which may warrant further investigation and/or action:

- There is a possibly that asbestos containing materials are in use as insulating materials in the boiler house and incinerator;
- While not of extreme concern, the presence of a former UST for temporary storage of wastewater is notable. If this UST had any leaks, impact to site soils may have occurred;
- Even though the AST for gasoline has never been used, its presence, along with the gasoline pump, indicates the potential for a gasoline release to soils;

- It is unknown whether or not PCBs are present in the dielectric fluid in facility transformers;

- The overall site housekeeping is only fair. While there were no indications that the debris contained anything that could cause environmental impact, their presence immediately raises the question of that possibility;

- Current environmental legislation in the Russian Federation is under transition;

- Liability issues regarding impact to the environment from current and historical practices on-site are not clear due to the fact that the state owns the land on which the Institute is located. Any third party located on this property may share any past, present, or future liability; and,

- There are reported to be numerous nuclear reactors and nuclear waste storage areas throughout the Russian Federation and the Moscow region in particular. This is only an issue given the rather questionable safety record of the former Soviet nuclear program.

Based on the findings presented above, the following recommendations are offered:

- It may be prudent to investigate the presence of asbestos and asbestos containing materials around pipes and flanges in the boiler house. If present and if the material is in good condition, routine preventative maintenance may be the only required action; removal may not be necessary.

- Unless the Institute is in dire need of the gasoline pump, it should be removed. In any case, the tank should be removed in order that it not be used in the future.

- It may be appropriate to have the transformers tested for PCB content in the dielectric fluids.

- If possible, the Institute should institute better housekeeping practices. Areas of debris and construction materials should be cleaned-up and disposed of properly. Open trenches should be filled and graded as soon as possible.

- Evolving Russian Federation environmental legislation should be carefully monitored.

- Prior to any commitment of capital by LPB, questions regarding land ownership and subsequent liability issues need to be addressed with the Institute and appropriate ministries of the Russian Federation. LPB should be clear on what, if any, liability it may inherit or be responsible for as a lessee or future owner of any property at the Institute.

- Although it is not known exactly how to proceed at this time, LPB may wish to investigate to a greater degree the proximity of nuclear facilities and their function, age, and safety records.

2. Introduction

Background Information

This report presents the findings and recommendations of a focussed environmental site assessment (Phase I ESA) conducted at the Institute of Immunology (Institute), Moscow Region, Chekhov District, Lyubuchany, Russian Federation, Commonwealth of Independent States. This assessment was performed to advise Flad and Associates (FA), Madison Wisconsin, and Lederle-Praxis Biologicals (LPB), Wayne, New Jersey, of potential environmental liabilities associated with the property, if any. This report is the summary effort of work performed to fulfill tasks specified in the Environmental Resources Management, Inc. (ERM) 8 March 1993 proposal number P-93-0295.

The site visit, historical and regulatory review, and other areas of this assessment were performed by Mr. Paul Morin, P.G., of ERM, Inc., Exton, Pennsylvania, and Mr. Jerzy Kollajtis of ERM-Polska, Warsaw, Poland. This Report of Findings was prepared by ERM, Inc. The site visit was conducted on 24-27 May 1993.

Purpose and Scope

The purpose of this assessment was threefold:

(1) to determine any obvious areas or potential sources of environmental concern for liabilities that might exist at the site;

(2) to determine to what extent these sources are likely to impact the site; and

(3) to present a Report of Findings which will assist in assessing the need for further investigations or analytical work that may be required to more accurately determine the presence and extent of any detected or suspected contamination.

The scope of work defined for this project included an on-site investigation, general site characterization, a review of readily available site records, discussions with people familiar with the site history and environmental practices, and review of available regulatory information and documents from local, regional, and federal environmental ministries of the Russian Federation. The information obtained during this assessment is presented in subsequent sections of this report.

3. Site Description

General Site Description

The Institute is located approximately 54 kilometers (km) south of the center of Moscow adjacent to the M-2 highway. It is situated in a rurál area 1.5 km north/northwest of the town of Lyubuchany (Figure 1, Attachment C-1). The property on which the Institute is located consists of approximately 6 hectares (14.8 acres), and has an adjacent parcel available for future expansion. There are 27 major buildings and structures on-site, three of which are under construction (Figure 2). These include:

- Hot water boiler and tank
- Waste water pump building
- Incinerator building
- Salt chemical boiler
- Boiler house
- Two warehouses
- Two laboratories
- Air intake structure
- Garage
- Gas metering building
- Electrical building
- Administration building
- Water preparation building
- Water tower
- Potable well field/pump houses
- Water storage tanks
- On-site housing
- Air compressors
- Diesel underground storage tank
- Liquid nitrogen storage tanks
- Gasoline pump island
- Above ground gasoline storage tank (not used)
- Three buildings under construction
- Test animal shelters (not on map)

Approximately 40% of the property is either paved, sidewalk covered, or occupied by the buildings and other structures. Of the 60% which is open to the soils, 40% is forested and the balance either grass, vegetation, or gravel covered. The facility has been in operation since 1985, however, development began in 1975 and the Institute took over operation of the site in 1980. Prior to 1975, the area was reportedly forested or used for agriculture.

Water is supplied by six on-site wells, which pump from a depth in excess of 90 meters (295 feet). Prior to consumption, the water is treated for the reduction of iron and then stored in two large holding tanks (for fire fighting use) and in a water tower storage tank (for general consumption and production use). Wastewater (and small amounts of stormwater) is collected via a sanitary sewer system, directed to a central pumping location, and then pumped to a wastewater treatment plant located in Lyubuchany, on the property of a plastics manufacturing plant.

Electricity is supplied from a traction substation of the Moscow Railway, and is fed by two 10 kilovolt (kV) lines through a transformer substation located on the Institute property. Natural gas is utilized for heating and other purposes and is supplied via an underground pipeline.

Description of Adjacent Properties

The facility is located within a rural agricultural area immediately north/northwest of the town of Lyubuchany, Chekhov District, Moscow Region. There are industrial/commercial facilities within two miles of the Institute, and include a plastics manufacturing plant and a large collective farm (now privatized). In addition, the town of Chekhov, approximately 12 km to the south/southwest, houses numerous industrial facilities, including a large printing complex and a steam and electric generating station (fossil fuel).

Immediately adjacent properties consist of:

North - Grazing land, farmland, forest, the River Rozjia (creek), open land

South - Agricultural land (cooperative farm), site access road, vacant land

East - Forest, vacant land

West - Vacant land, River Rozjia, M-2 roadway

4. Site Inspection and Building Review

ERM conducted the site walkover of the Institute on 24-27 May 1993. Institute personnel interviewed included:

- Dr. Zav'yalov, Director of the Institute
- Vladislav Zhemchugov, Head of Laboratory
- Dr. Morozov, Head of Ecology, Safety, and Medicine
- Mr. Usolkin, Deputy Director - Capital Construction
- Mr. Zolotykh, Head of Capital Construction
- Mr. Merkulov, Head, Energy and Mechanical Supply
- Ms. Valentina Karabelnikova, Group Leader

Prior Site Occupancy and Uses

Historical Property Occupancy

According to Dr. Zav'yalov and Mr. Zhemchugov, the site was first considered for development in 1968. Prior to 1968 and through 1975, it was reported that the land was forest and no buildings or structures were ever present. Construction plans were drawn up and actual site development began in 1975. The facility was originally planned by the Institute of Genetics in Moscow. However, the Institute never occupied the site nor was any production or research conducted. In 1980, the Institute of Immunology was founded and assigned to the site, and construction and remodeling continued until 1985, when actual occupancy and research/development began.

In 1986, a new building, designed for production and administration, was planned and construction began. In 1990, funding was suspended and this building remains unfinished. Currently, two new buildings are under construction on the newly obtained parcel of land occupied by the Institute. Under a joint venture agreement with General Machinery of Moscow and Cristall Bottling of Russia, these two buildings will serve as manufacturing units to produce plastic bottles and subsequently bottle vodka. The vodka will be shipped to the facility in trucks and bottled at the facility. No vodka production will take place on-site and the Institute will not be directly involved with production at either facility.

There is no indication of any past ownership or activities which may have contributed to either on-site or off-site environmental impact.

Aerial Photograph Review

Aerial photographs of the area were not available from the Institute and probably are not readily available from Russian agencies or ministries. The U.S. State Department was contacted regarding the possibility of the existence of aerial or surveillance photographs of the area in their files or the files of other federal agencies. To date, no progress has been made in locating aerials of the Institute and surrounding properties.

Site Inspection

The Institute is located approximately 54 kilometers (km) south of the center of Moscow adjacent to the M-2 highway. It is situated in a rural area 1.5 km north/northwest of the town of Lyubuchany (Figure 1, Attachment C-1). The property on which the Institute is located consists of approximately 6 hectares (14.8 acres), and has an adjacent parcel available for future expansion. There are 27 major buildings and structures on-site, three of which are under construction.

Approximately 40% of the property is either paved, sidewalk covered, or occupied by the buildings and other structures. Of the 60% which is open to the soils, 40% is forested and the balance either grass, vegetation, or gravel covered. The facility has been in operation since 1985, however, development began in 1975 and the Institute took over operation of the site in 1980. Prior to 1975, the area was reportedly forested or used for agriculture.

Water is supplied by six on-site wells which pump from a depth in excess of 90 meters (295 feet). Prior to consumption, the water is treated for the reduction of iron and then stored in two large holding tanks (for fire fighting use) and in a water tower storage tank (for general consumption and production use). Wastewater (and small amounts of stormwater) is collected via a sanitary sewer system, directed to a central pumping location, and then pumped to a wastewater treatment plant located in Lyubuchany, on the property of a plastics manufacturing plant.

Electricity is supplied from a traction substation of the Moscow Railway, and is fed by two 10 kilovolt lines through a transformer substation located on the Institute property. Natural gas is utilized for heating and other purposes and is supplied via an underground pipeline.

Overall general site condition is fair to good. The structural and functional aspects of buildings and grounds are generally well maintained. The building interiors and exteriors are in fair condition, although normal "decorative" maintenance (painting, carpet replacement,

decorating, etc.) is lacking due to insufficient allocation of Institute funds. According to Institute personnel, there is little capital available for this type of upkeep at present, including landscaping type exterior maintenance. Grassy areas are not mowed and are trees and shrubs are not trimmed or cultivated. The "physical plant" of the Institute is given priority and is keep in good operating condition.

There are numerous areas of construction type debris, including bricks, steel, and concrete. Additionally, there are many trenches on-site, which are part of the construction of the new administration building and the on-going construction of the bottling joint venture. There was no evidence that these trenches were used for burial af any type of debris, chemicals, or trash.

Underground Storage Tanks (USTs)

There are currently four USTs on-site:

- One 6000 liter diesel tank for use with the back-up electrical generator (Photograph 1, Attachment C-2);
- Two water storage tanks for fire fighting emergencies ; and,
- One 5000 liter wastewater holding tank, no longer in use.

The diesel tank was installed in 1991 to replace an above ground tank. The construction of the tank is reported to be 14 millimeter (mm) steel with an asphaltic exterior coating.

Facility personnel indicted that there have been no other USTs located on-site to the best of their knowledge.

Above-ground Storage Tanks (ASTs)

There are five above ground storage vessels at the facility. Two are liquid nitrogen tanks, two are compressed air tanks, and one is a gasoline storage tank (Photograph 2) which, according to Institute personnel, was never put in use.

Mr. Usolkin, Deputy Director of Capital Construction stated that this tank and a gasoline pump (Photograph 3) were originally installed to service Institute vehicles and busses which provide transportation for employees. However, it was decided after installation to continue to utilize local gasoline distribution facilities in Lyubuchany, most likely for "political" reasons. Occasionally, when fuel shortages occur, the Institute does purchase gasoline in

bulk, delivers it to the site on an Institute vehicle, and uses the pump to distribute gasoline directly from the storage vehicle.

As such, it was stated that the tank itself and piping from the tank to the pump was never used (in fact, it is disconnected and apparently has been for some time, Photograph 4). The pump is used from time to time, and flexible hose is used to connect the storage tank (located on a truck) to a standpipe which connects to the gasoline pump.

The nitrogen and compressed air tanks are not specifically environmental issue as far as impact to soils, air, or ground water are concerned.

Electrical Transformers

There are two 630 kilowatt (kW) transformers located at the Institute. They are owned by the Institute and are fed by underground electric lines from the Moscow Railway. They are dielectric cooling fluid(oil) type, but it is unknown whether or not the fluids contain polychlorinated biphenols (PCBs). Personnel at the Institute did not know whether PCBs were used, and did not seem to be concerned. Apparently, PCB-containing transformers are not a serious issue in Russia at this time.

Solid Waste Disposal

Solid waste, consisting of normal domestic-type refuse and some construction debris, is collected by the Institute and stored on-site until a sufficient quantity is generated to warrant a trip to the local sanitary landfill in Chekhov. When the amount of debris and trash warrant, an Institute truck is used to haul the solid waste to the landfill.

Sanitary and Storm Sewers

As previously indicated, the Institute has a sanitary sewer system connected to an on-site pumping station. This system also accepts a very small quantity of stormwater. The wastewater is then pumped to the local treatment works located at a plastics manufacturing plant in Lyubuchany. Reportedly, this treatment plant still has reserve capacity and operates without violation of discharge limits.

There is no stormwater collection system at the Institute. The bulk of rainwater and snow melt either infiltrates into the upper sandy soils or runs off the property to the west/northwest. Ultimate discharge for this runoff is the River Rozjia.

Septic System

There is no septic system at the facility and personnel state that to their knowledge, there was never any septic systems, drywells, or cesspools on Institute property.

Stained Soils

No stained soils were noted at the facility.

Exterior Pits, Ditches

As stated previously, there are numerous trenches located throughout the property. Institute personnel indicated that all the trenches were placed for the direction of underground utility lines and pipes for the three buildings which have been under construction over the years.

In addition, there is a series of tunnels on the facility property which were placed for access to utility and steam lines. Manholes located throughout the property provide access to these tunnels. At the time of the site inspection, the tunnels had about two feet of water in them, and were in the process of being pumped. Personnel indicated that this is normal, as a high seasonal perched water table is present in the area.

Local Geology and Hydrogeology/Topography

The site is at an approximate elevation of 171 meters above mean sea level (MSL). The site ranges from 170 meters above MSL to 172 meters above MSL. The topography is generally flat with the general two meter slope to the west/northwest. Soils consist of sandy clays and clays, with discontinuous sand lenses at shallower depths.

Drilling logs from previous geotechnical investigations indicate a shallow water table at 13 to 14 meters. This water table is not considered a usable aquifer. The first potable aquifer is reported to be in excess of 75 meters. Additionally, there is a discontinuous perched water table, affected seasonally, at approximately 1.7 to 3 meters.

The closest water body is the River Rozjia, which is at an elevation of 153 meters above MSL. It is approximately 100 meters west of the site, and under normal seasonal circumstances is 1.4 meters wide and .5 meters deep. The Institute has no direct outfalls to the river. Institute personnel indicated that there are no wetlands in the area and the facility does not lie on a designated floodplain. Field observations confirmed these statements.

Preliminary Sampling

No preliminary sampling was conducted as part of this assessment.

On-Site Potable Water Wells

The facility is supplied with potable water from six wells located on the Institute property. These wells draw groundwater from two separate aquifers at depths of 90 and 134 meters, respectively. The total capacity is 1500 cubic meters/day. Raw water quality is good with the exception of iron content, which has to be treated in an iron purification process. There is a slight excess of fluoride in wells # 5 and 6, but this is not an issue since water from all wells is blended prior to treatment, providing good overall water quality.

Submersible pumps force the water through an air injection device to a system of pressurized filters installed to remove the iron. The injected air oxidizes ferrous iron into ferric iron, which forms an insoluble ferric hydroxide which is removed by the filters. The system operates automatically and activates based on water demand. Chemical and biological analyses are conducted each month as required by local regulation. No violations have been reported. A water quality analysis table is presented in Attachment C-3, Exhibit 1.

Adjacent Off-Site Environmental Concerns

Aside from two above ground storage tanks located at the entrance to the Institute access road which reportedly store fertilizers for the cooperative farm, no outstanding environmental concerns were noted immediately adjacent to the facility.

Building Review - General Construction

As stated previously, construction at the facility took place over the course of 10 years. This included original construction when the facility was earmarked for the Institute of Genetics and subsequent remodeling, after the Institute of Immunology was assigned the site. Although many of the buildings have a somewhat different exterior look, construction is basically identical.

As is the norm in Russia and the former Soviet Union, construction is pre-cast concrete exterior panels, concrete floors, ceilings, support columns, and walls. Decorative fascia brick is used on those buildings which are used for administration and research. Other buildings, such as the unfinished administration building and the water pump houses, are constructed of

solid brick with concrete ceilings and floors. Metal window frames (aluminum) are placed after the exterior walls are in place.

Interiors consist of either brick, tile, or wood product paneling over the concrete walls. In some cases, the concrete walls are merely painted. Carpet and tile cover most of the floor in the administration and laboratory buildings, while the exposed concrete floors of the other buildings is painted. Some have decorative brick floors.

Foundation construction varies. Some of the buildings have basements (such as the incinerator), some have crawl spaces, others are constructed with footings and slab-on-grade. Since the seasonal perched water table is high in this area, buildings with basements or usable crawl spaces must be dewatered by means of sumps and pumps. In the case of the new administration building, the basement is flooded by at least a meter of water.

Very little insulation material is used in building construction. In fact, it was stated that no insulation, other than the walls and ceilings themselves, is used in construction for control of building heat loss. Institute personnel indicated that they knew of no asbestos or asbestos containing materials in these structures. However, there is a likelihood that the boiler house and incinerator buildings may utilize ACMs for flange fittings or steam pipe insulation. There were indications of fibrous insulating materials in the boiler house.

The test animal shelters are constructed of steel supports and steel siding. The interiors of these buildings were not investigated.

Building Review - Environmental Issues

The following section provide information on possible environmental issues in each of the main buildings at the Institute. The following is a listing of those eight buildings considered:

- Administration/Cafeteria
- Laboratories
- Water Preparation Building
- Garage
- Boiler House
- Waste Water Pump House
- Incinerator
- New Administration Building (under construction)

The remaining buildings and structures are considered as ancillary, and are reviewed as a group at the end of this section.

Administration/Cafeteria

Electrical Transformers

No liquid-filled transformers or capacitors were noted within the structure.

Above-ground Storage Tanks (ASTs)

There are no ASTs located in the Administration building.

Liquid Waste Storage and Disposal

Aside from cleaning agents and food preparation (cooking) oils, there is no liquid waste generated in this building.

Hazardous Waste Storage and Disposal

No hazardous waste is generate or stored in the building.

Drains and Pits

The only drains and/or pits within the building are sink and sanitary drains, which discharge into the facility sewer system and ultimately to the wastewater treatment plant in Lyubuchany.

Air Emissions

There are no air emissions from this building.

Laboratories

Electrical Transformers

No liquid-filled transformers or capacitors were noted within the structure.

Above-ground Storage Tanks (ASTs)

There are no ASTs located within either laboratory building.

Liquid Waste Storage and Disposal

The laboratory uses very small quantities of solvents and other chemicals as part of the normal laboratory procedures, equipment utilization, and maintenance. Personnel indicated they have small amounts of toluene and benzol, as well as acetone and alcohol. These chemicals are purchased in laboratory grade containers (in liter quantities). Some of the waste solvents are burned in the incinerator, and the balance is disposed of via laboratory drains to the wastewater stream. No permits are required by Russian law for use, storage, or disposal of these small quantities.

Hazardous Waste Storage and Disposal

The only materials which could be considered as hazardous waste are small amounts of biological and radioactive waste particles which are captured by special laboratory hood filters. Dr. Zav'yalov stated that the biological filters are incinerated in the Institute's incinerator (following manufacturers instructions) and the radioactive waste filters are removed off-site by an authorized disposal company and disposed of at an approved disposal facility, as required by Russian law.

Drains and Pits

The only drains and/or pits within the building are laboratory sinks and sanitary drains, which discharge into the facility sewer system and ultimately to the wastewater treatment plant in Lyubuchany.

Air Emissions

There are numerous laboratory hood exhaust fans and ventilation exhausts located throughout the laboratories. All are connected to several central exhaust stacks and emitted to the atmosphere after filtering through the hood filtration systems. The Institute performs routine air quality monitoring throughout the property, including air modeling. It was stated that the air quality throughout the facility has at all times been well below the maximum allowable limits as set by Russian law. A copy of the Institute's air quality record is included in Attachment C-3, Exhibit 2. Mr. Usolkin stated that their levels are 50 to 100 times less than the limits set by Russian law.

240

Other Issues

The laboratories are equipped with an external security system consisting of pressure sensors on the windows and "electric eye" type detectors. Additionally, there are radiation monitors located in areas where isotopes are stored and used. Natural gas, nitrogen, oxygen, and compressed air are supplied to the laboratories.

Water Preparation

Electrical Transformers

No liquid-filled transformers or capacitors were noted within the structure.

Above-ground Storage Tanks (ASTs)

Aside from smaller tanks to hold compressed air and the treatment tanks themselves, there were no ASTs noted within the water preparation building. There is also a water tower located adjacent to this building.

Liquid Waste Storage and Disposal

There is no liquid waste storage or disposal in the building, aside from the disposal the the filtrate produced during the iron removal process. This waste is discharged into the wastewater system and treated at the plant in Lyubuchany.

Hazardous Waste Storage and Disposal

No hazardous waste is generated or disposed of from the water preparation building.

Drains and Pits

The only drains and/or pits within the building are floor troughs and drains which collect and discharge water into the waste stream.

Air Emissions

There are no air emissions from this building.

741

Garage

Electrical Transformers

No liquid-filled transformers or capacitors are located within the structure.

Above-ground Storage Tanks (ASTs)

There are no ASTs located within the garage structure.

Liquid Waste Storage and Disposal

Waste oil from vehicle maintenance is burned in the facility incinerator, which is permitted under Russian law. Other small quantities of waste service liquids are either also burned (if flammable) or disposed of through the wastewater system.

Hazardous Waste Storage and Disposal

Service liquids (antifreeze, motor oil, transmission fluids, brake fluids, etc.) are stored in small quantities in the garage.

Drains and Pits

The only drain and/or pit within the building is a shop drain which, as with all other drains at the Institute, discharges into the wastewater system for eventual treatment off-site.

Hydraulic Lift Inspection

There are no in-ground hydraulic lifts in the garage. There is one above-ground lift present and, while old, appears to be good working order.

Air Emissions

There is a ventilation fan in the main garage area, which discharges through the building wall. No other air emissions were noted.

Boiler House

Electrical Transformers

No liquid-filled transformers or capacitors were noted within the structure.

242

Above-ground Storage Tanks (ASTs)

The boiler utilizes natural gas as a fuel. No ASTs were noted within the boiler house.

Liquid Waste Storage and Disposal

No liquid waste is generated in the boiler house, aside from some non-contact cooling water and condensate which is discharged through an extensive floor trench/drain system into the wastewater stream.

Hazardous Waste Storage and Disposal

No hazardous waste is generated in the boiler house.

Drains and Pits

As stated previously, the building does have an extensive system of floor trenches and drains which direct piping and divert condensate and non-contact cooling water to the wastewater system.

Air Emissions

Air emissions include fumes from the burning of natural gas and normal building ventilation. Mr. Usolkin indicated that the Institute routinely tests for NOx and CO2, and are without fail well under published Russian standards. Also, these two constituents are part of the normal air quality monitoring and modeling.

Wastewater Pump House

Electrical Transformers

No liquid-filled transformers or capacitors are located within the structure.

Above-ground Storage Tanks (ASTs)

There are no ASTs within the building.

Liquid Waste Storage and Disposal

The only liquid waste is the wastewater itself.

Hazardous Waste Storage and Disposal

No hazardous waste is generated in the building.

Drains and Pits

There were no drains noted within the building. The wastewater pumping area consists of a large below-grade pit where all wastewater collects. From here, it is pumped directly to the treatment works in Lyubuchany.

Air Emissions

There are no appreciable air emissions from this building.

Incinerator

Electrical Transformers

No liquid-filled transformers or capacitors are located within the structure, only electric control panels.

Above-ground Storage Tanks (ASTs)

There are no ASTs located within the structure.

Liquid Waste Storage and Disposal

Liquid waste (solvents, oils, etc.) are stored here for a very short period of time prior to incineration. No long term liquid waste is stored.

Hazardous Waste Storage and Disposal

The main purpose of the facility incinerator is to dispose of animal carcasses (rabbits, rodents, monkeys, etc.) after controlled testing. Animal carcasses are stored for a short period only, until sufficient quantity is present. These carcasses are stored in a secure, refrigerated cabinet. Additionally, as stated previously, small amounts of spent solvents and oils are also burned, along with biological waste filters. The incinerator operates at temperatures in excess of 1200 degrees C (2300 degrees F), and little, if any, ash is generated. The small quantity of ash which may remain is non-toxic and is treated as normal domestic type waste and disposed of at the sanitary landfill with other site-generated debris.

-44

Drains and Pits

The main incinerator area is located below ground surface in a basement. There is a small pit with a pump which keeps the basement are from flooding. The water is pumped to the wastewater lines and on to the wastewater pump house. No other drains were noted in the incinerator building.

Air Emissions

The incinerator is permitted by the district environmental authority in Chekhov. No separate air emission testing is performed on the incinerator stack.

Ancillary and Other Structures

In addition to the structures discussed in previous sections of this report, the structures listed below were also either inspected or observed during the site inspection:

- Hot water boiler and tank
- Salt chemical boiler
- Two warehouses
- Air intake structure
- Gas metering building
- Electrical building
- Water tower
- Potable well field/pump houses
- On-site housing
- Two buildings under construction (vodka bottling joint-venture

Of these structures, only one environmental concern was noted. The electrical building houses a diesel generator for the production of emergency electricity in case of a power outage. The system currently employs a UST for the storage of diesel fuel needed to operate the generator. Previously, an above ground vessel was utilized for a smaller generator. There is a concrete pit adjacent to the generator, which has an unknown quantity of diesel fuel in it. While there is apparently no direct conduit to soils from the pit, the presence of this fuel is of concern as far as impact to site soils and perched water is concerned.

745

Summary of Site Related Environmental Concerns

The following minor environmental concerns were noted either on-site or adjacent to the site:

- There is a possibly that asbestos containing materials are in use as insulating materials in the boiler house and incinerator;
- While not of extreme concern, the presence of a former UST for temporary storage of wastewater is notable. If this UST had any leaks, impact to site soils may have occurred;
- Even though the AST for gasoline has never been used, its presence, along with the gasoline pump, indicates the potential for a gasoline release to soils;
- It is unknown whether or not PCBs are present in the dielectric fluid in facility transformers; and,
- The overall site housekeeping is only fair. While there were no indications that the debris contained anything that could cause environmental impact, their presence immediately raises the question of that possibility.

Please note that these concerns are based on current U.S. regulatory climate and regulatory compliance issues. The Russian environmental policy, both national and regional, apparently does not consider these major concerns.

5. Regulatory Review

The Russian Federation remains the largest governmental unit in the world, covering over 17 million square kilometers and having a population of well over 153 million. Additionally, the old Soviet system of almost total governmental control created a bureaucracy second to none. The environmental regulatory climate was not immune to this system. Environmental laws and regulations were in force, but they were, on a whole, fairly basic, poorly enforced, and oftentimes ignored. It will take many years for these conditions to change for the better.

In November of 1991, the Ministry of Environment and Natural Resources was established. This new ministry was created to regulate all aspects of environmental protection and regulation in the Russian Federation. The ministry enacted "The Law of the Russian Federation on the Protection of Natural Environment", which takes a broad view and all-encompassing approach to regulating environmental issues. It establishes the premise that citizens of the Russian Federation have the right to live in clean environmental conditions.

From there, the Law puts forth 94 articles and 15 chapters on overall environmental management.

At the request of the Institute and Lederle-Praxis, actual communication with environmental agencies and ministries was not conducted. It was feared that communication with these agencies and ministries may subject the Institute to undue attention. It was decided to look at environmental compliance from a broader view, especially since the Institute did not exhibit any serious outstanding environmental questions or practices.

Site Interaction with Regional Environmental Agencies

The Institute of Immunology, which is not an industrial site and would not be considered as a potential "major polluter", has most of it's environmental regulatory contact at the regional and district levels. In the case of the institute, "local" agencies of the Moscow Region and Chekhov District have the most interaction with the Institute. The Institute provided a list of those agencies which, in some way, either regulates their activities or inspect their facilities. The actual list is included in Attachment C-3, Exhibit 3. A translation of it, listing those agencies or administrations responsible in some way for environmental compliance and enforcement, is provided below:

- Regional Environmental Administration - Chekhov
- Environmental / Sanitary Administration - Chekhov
- Civil Defense
- Hydrogeological Administration - Moscow
- Fire Prevention Administration
- Fishery Inspection (any discharges to the river and the affect on river ecosystems)
- Hydrometereological Committee (surface water)
- Water Board for the River Basin
- Architecture Administration
- VODOKANAL - Russian Water Supply and Consumption Authority

These agencies and administrations are the ones which directly regulate the environmental aspects of the Institute. For instance, these authorities receive Institute documentation on or regulate aspects of air quality, potable water analysis, incinerator permitting, wastewater effluent levels, and discharges to rivers, as well as building codes, fire equipment standards and fire safety, and civil defense issues.

The Institute does not have a separate environmental department, nor one person responsible for environmental compliance. However, their record keeping on environmental issues is very good. In all cases, the Institute's monitoring (air, water, etc.) results were well within

regulatory standards. In addition, discussions with Institute personnel showed them to be extremely environmentally aware and apparently committed to good site environmental management.

Outstanding Regulatory Issues

Based on the site visit, discussions with Institute personnel, and limited knowledge of current Russian and past Soviet environmental regulations, no serious regulatory issues were apparent. The Institute personnel, mostly scientists and professionals, have a keen awareness of environmental issues and sound environmental practice.

6. Site Specific Issues

The following subsections discuss specific issues associated with the Institute based on it's location and on the interests of a U.S company desiring to locate there.

Proximity to Nuclear Facilities

The Soviet nuclear program was not as regulated as the U.S. nuclear program or that of other western countries. Accidents at nuclear facilities such as the Chernobyl Generating Facility in the Ukraine, 400 miles southwest of Moscow, has brought this fact to light in a rather dramatic way. In addition, with the new openness of the Russian Federation, other reports of nuclear accidents and incidents have come to light in recent years.

While it was not possible to collect direct information on the location of nuclear facilities in the area of the Institute from the "public record" of appropriate ministries, the following information was obtained:

1. Institute personnel indicated that the closest nuclear power plant is in Obninsk in the Kaluga region, 50 miles southwest of the Institute. The next closest plant is in Kursk, 280 miles to the south.

2. Recent articles in the New York Times, The London Sunday Times, and even Readers Digest point to very serious nuclear problems, including outdated and/or poorly designed reactors and uncontrolled nuclear waste disposal sites. These include:

- There are over 100 reported "trouble spots", including reactors and waste sites, located throughout the Russian Federation.

- There are reported to be over 50 nuclear reactors of varying sizes within the city of Moscow, mostly at scientific research institutes and universities.

- It is reported by the London Sunday Times that there are over 600 nuclear waste storage/disposal sites within the Moscow region, of varying sizes and types.

Aside from the reported locations of the closest nuclear power stations by Institute personnel, the additional information presented above has not been confirmed through old Soviet or Russian Federation records.

Land Ownership

While some privatization of land is in progress in the Russian Federation, the Institute of Immunology does not at present own the land on which it is located. Officially, the land still belongs to the "state". Institute personnel indicate that eventually the Institute will be given ownership of the land it currently uses and has option to use. However, in this light, liability issues become very uncertain.

Under the current system, it is uncertain who would be ultimately liable if any serious environmental problems, either historical or current, were to be discovered on the site. Should a third party wish build or lease facilities through a Russian enterprise which is located on state owned land, a detailed investigation on liability issues would definitely be warranted prior to final agreement.

Other Site Issues

Vacant Land for Additional Construction

The Institute has offered Lederle-Praxis access to land located outside, but immediately adjacent to, the original boundary of the facility for construction. The area is forested, and includes the new administration building under construction. ERM investigated this forested area and the building as part of this assessment.

The building is a three story structure, unfinished at present. It has been left in this condition for several years. It is concrete and brick construction. At present, no environmental issues were noted.

The land adjacent to the building was also inspected. It is virgin forest, and there were no indications of any disturbances, dumping, spills, or any other activity which may have indicated environmental impact.

Prior Concerns

Preliminary discussions with Institute personnel during previous visits led to some concern regarding specific site activities based on information reportedly supplied by some facility personnel. These initial concerns and the result of further investigation of these concerns follows:

- Initially, it was thought that the Institute had at one time been either a manufacturer of biological weapons or had conducted research on biological weapons. Further investigation and questioning of Institute personnel revealed that no work on biological weapons or research on biological weapon was apparently conducted. The Institute conducted research and manufactured vaccines for the Soviet military for use against biological weapons. They indicated that at no time were any live strains of bacteria or viruses brought on-site; only "dead" material (DNA) was used for research. According to Institute personnel, there have never been any material on-site which could be considered a severe "biohazard".

- It was reported that the Institute has a radiation monitor to monitor ambient air as a result of the Chernobyl nuclear accident. Personnel indicated during this site visit that the monitors are used only to monitor in-house isotopes used in the Institute's research, and that the monitoring is in no way connected to the Chernobyl accident or conducted to monitor the possibility of another similar situation.

7. Summary of Investigation

The environmental site assessment of the Institute of Immunology revealed several areas of concern; however, none can be considered extremely serious based on current Russian or even U.S. regulatory guidelines. They are presented here as minor issues of limited concern. LPB may wish to pursue further investigations on these environmental issues prior to any financial commitment at the Institute.

Findings

Based on the data obtained during the site inspection, subsequent limited regulatory review, and interviews with personnel familiar with the site and its history, the following are considered minor environmental issues which may warrant further investigation and/or action:

- There is a possibly that asbestos containing materials are in use as insulating materials in the boiler house and incinerator;
- While not of extreme concern, the presence of a former UST for temporary storage of wastewater is notable. If this UST had any leaks, impact to site soils may have occurred;
- Even though the AST for gasoline has never been used, its presence, along with the gasoline pump, indicates the potential for a gasoline release to soils;
- It is unknown whether or not PCBs are present in the dielectric fluid in facility transformers;
- The overall site housekeeping is only fair. While there were no indications that the debris contained anything that could cause environmental impact, their presence immediately raises the question of that possibility;
- Current environmental legislation in the Russian Federation is under transition;
- Liability issues regarding impact to the environment from current and historical practices on-site are not clear due to the fact that the state owns the land on which the Institute is located. Any third party located on this property may share any past, present, or future liability; and,
- There are reported to be numerous nuclear reactors and nuclear waste storage areas throughout the Russian Federation and the Moscow region in particular. This is only an issue given the rather questionable safety record of the former Soviet nuclear program.

Recommendations

Based on the findings presented above, the following recommendations are offered:

- It may be prudent to investigate the presence of asbestos and asbestos containing materials around pipes and flanges in the boiler house. If present and if the material is in

good condition, routine preventative maintenance may be the only required action; removal may not be necessary.

- Unless the Institute is in dire need of the gasoline pump, it should be removed. In any case, the tank should be removed in order that it not be used in the future.

- It may be appropriate to have the transformers tested for PCB content in the dielectric fluids.

- If possible, the Institute should institute better housekeeping practices. Areas of debris and construction materials should be cleaned-up and disposed of properly. Open trenches should be filled and graded as soon as possible.

- Evolving Russian Federation environmental legislation should be carefully monitored.

- Prior to any commitment of capital by LPB, questions regarding land ownership and subsequent liability issues need to be addressed with the Institute and appropriate ministries of the Russian Federation. LPB should be clear on what, if any, liability it may inherit or be responsible for as a lessee or future owner of any property at the Institute.

- Although it is not known exactly how to proceed at this time, LPB may wish to investigate to a greater degree the proximity of nuclear facilities and their function, age, and safety records.

8. Disclaimer

Scope of Activity

This report is based upon the application of scientific principles and professional judgment to certain facts with resultant subjective interpretations. Professional judgments expressed herein are based on the facts currently available within the limits of the existing data, scope of work, budget and schedule. To the extent that more definitive conclusions are desired by the client than are warranted by the currently available facts, it is specifically ERM's intent that the conclusions and recommendations stated herein will be intended as guidance and not necessarily a firm course of action except where explicitly stated as such. **WE MAKE NO WARRANTIES, EXPRESS OR IMPLIED, INCLUDING, WITHOUT LIMITATION, WARRANTIES AS TO MERCHANTABILITY OR FITNESS OF THE PROPERTY FOR A PARTICULAR PURPOSE.** In addition, the information provided to you in this report is not to be construed as legal advice.

Limitation of Use of This Report

ERM is not engaged in environmental auditing and reporting for the purpose of advertising, sales promotion, or endorsement of any client's interests, including raising investment capital, recommending investment decisions, or other publicity purposes. Client acknowledges this report has been prepared for the exclusive use of client and agrees that ERM reports or correspondences will not be used or reproduced in full or in part for such purposes, and may not be used or relied upon in any prospectus or offering circular. Client also agrees that none of its advertising, sales promotion, or other publicity matter containing information obtained from this audit and report will mention or imply the name of ERM.

Attachment C-1
Figures

Institute of Immunology
Moscow Region
Lyubuchany, Russian Federation

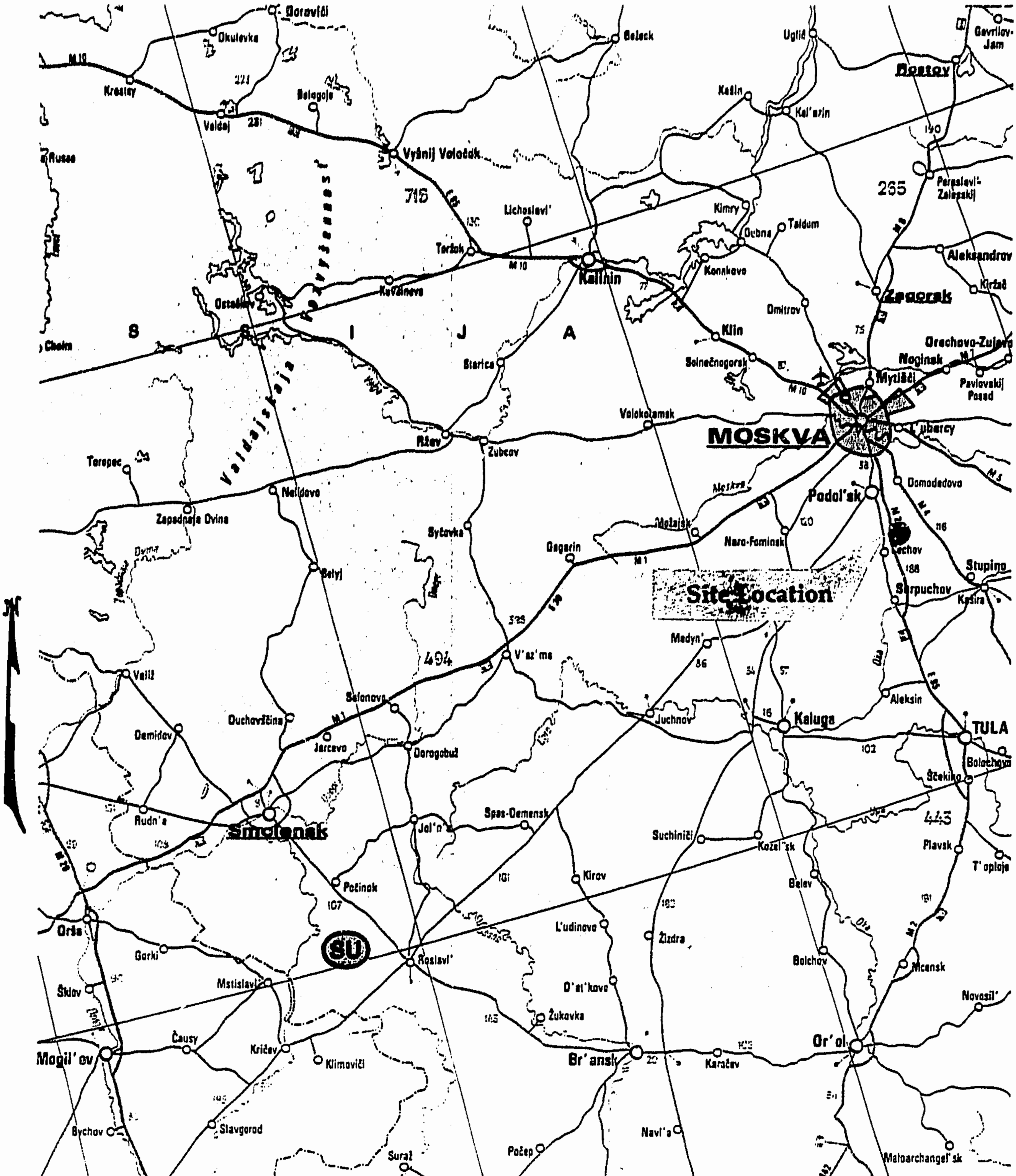

Source: Pneumatiques Michelin, 1991   Scale: 1 inch = 50 miles

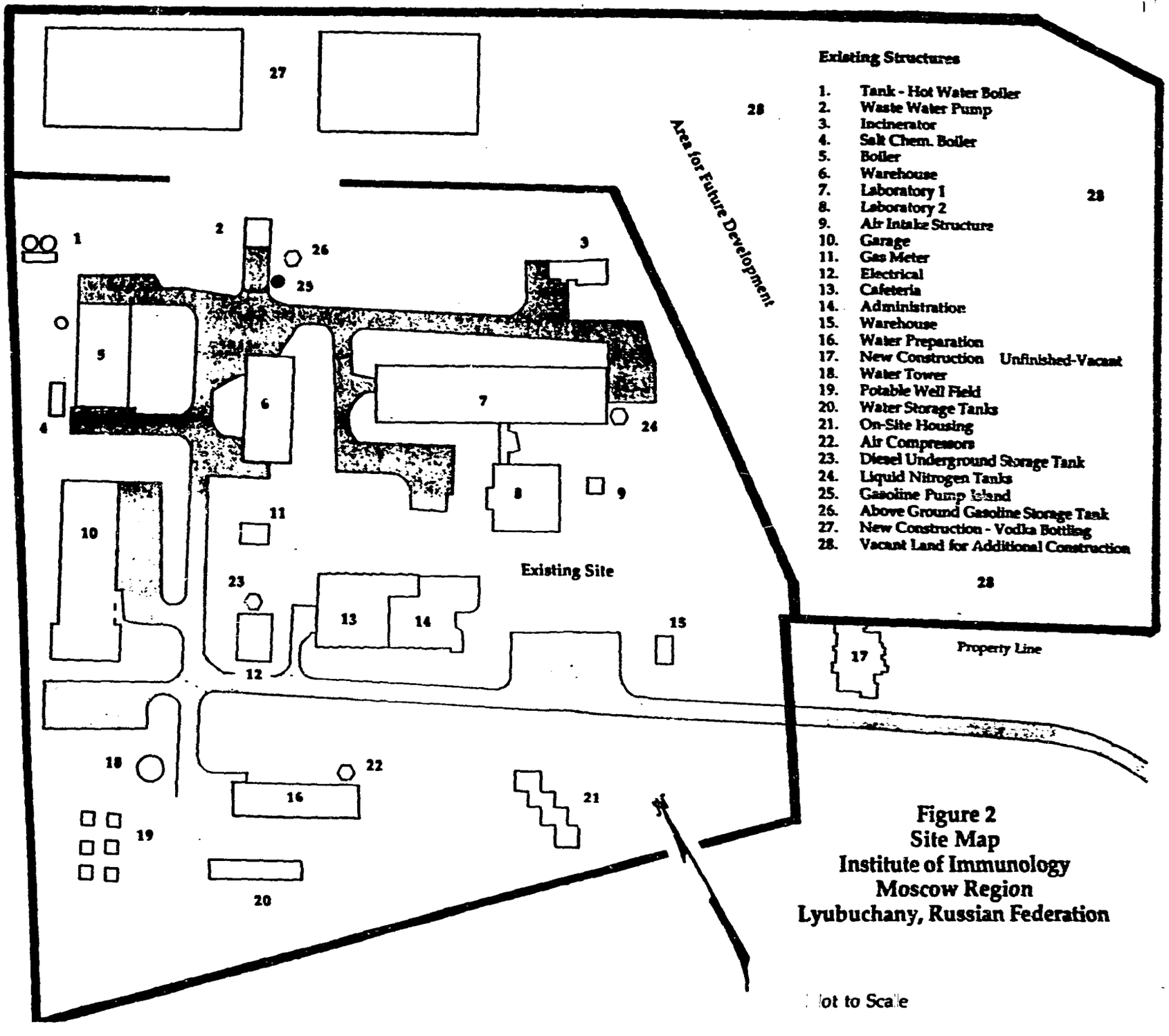

Figure 2
Site Map
Institute of Immunology
Moscow Region
Lyubuchany, Russian Federation

Attachment C-2
Site Photographs

SITE PHOTOGRAPHS

Photo Number	Description
1.	Underground Diesel Storage Tank
2.	Above Ground Gasoline Storage Tank - Not in Service
3.	Gasoline Pump Area
4.	Disconnected Supply Pipe - Gasoline Tank to Gasoline Pump

758

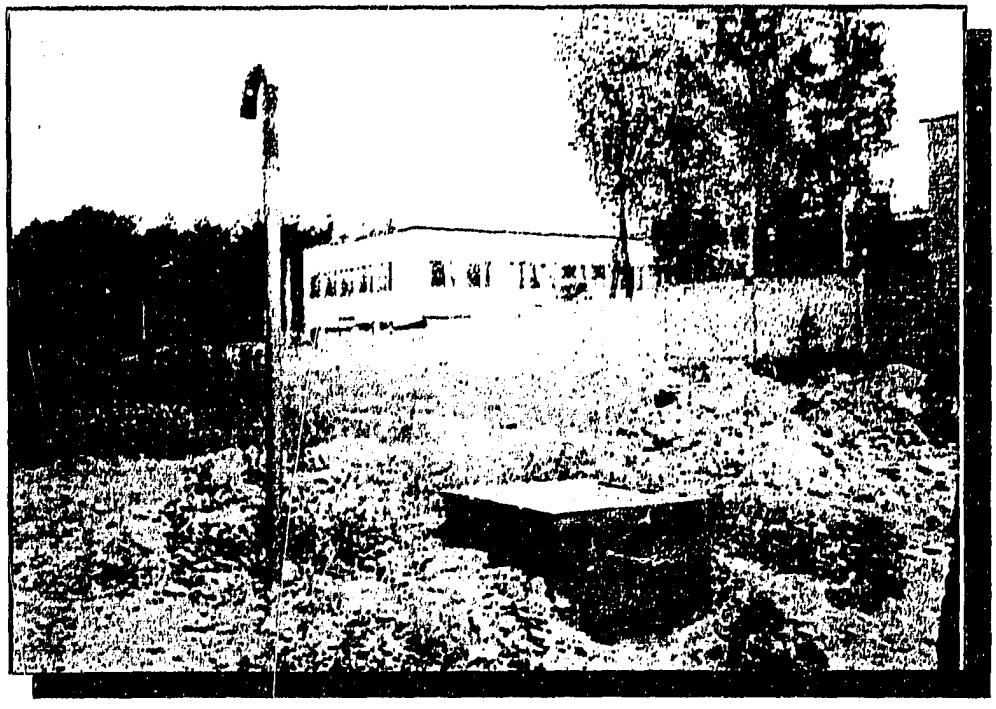

1

2

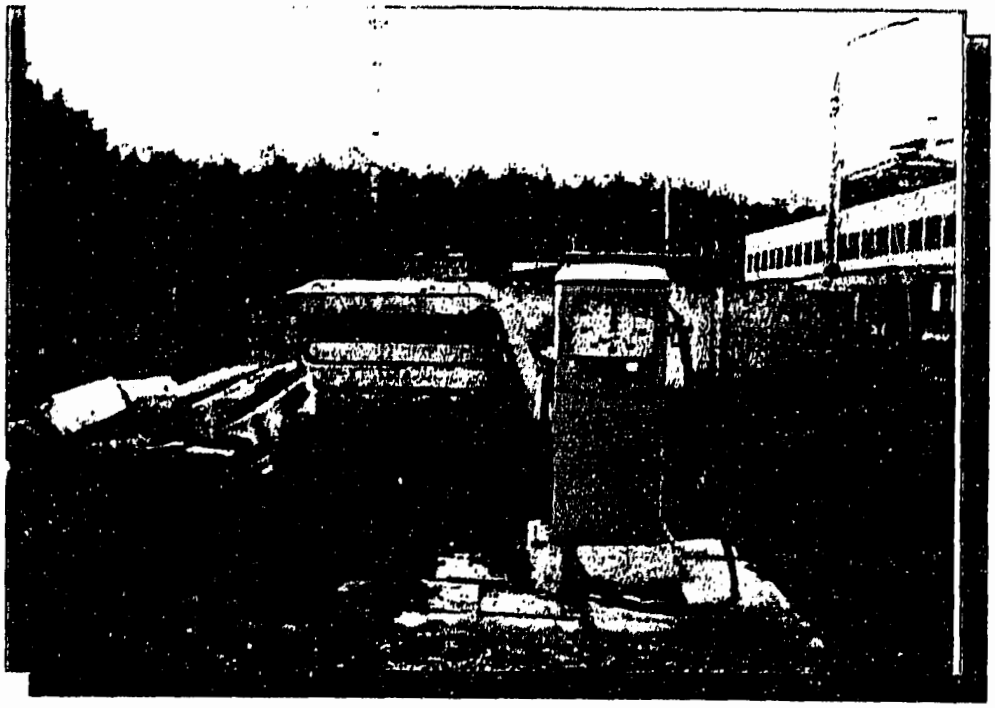

3

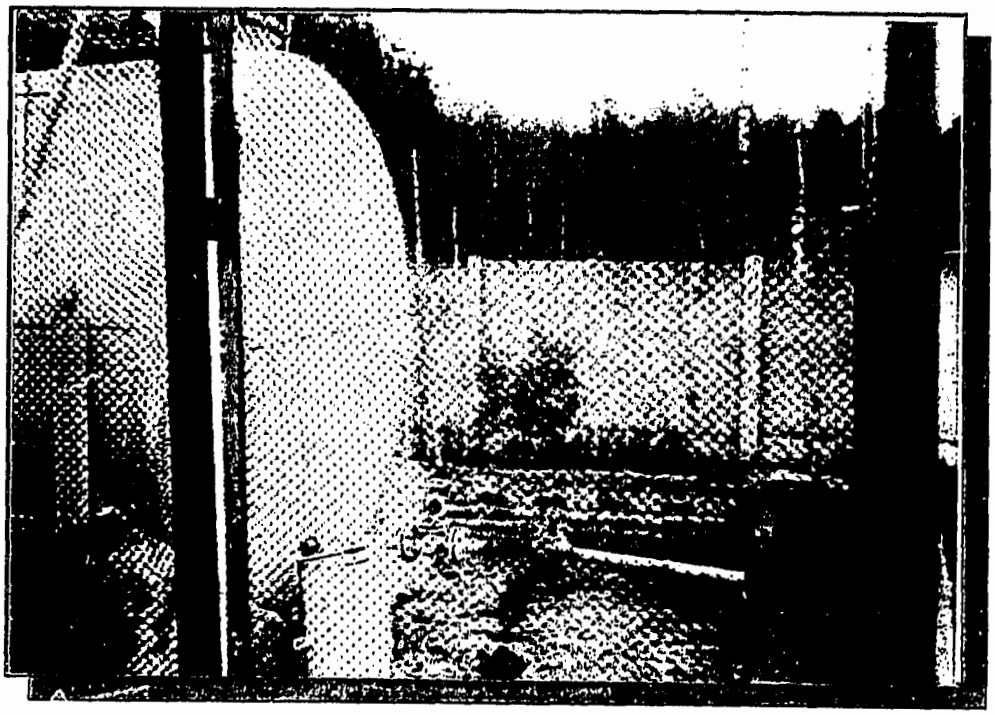

4

Attachment C-3
Site Documentation

EXHIBIT 1
Potable Water Analysis

262

Original water chemical analysis

Description	Standards required	1st well	2nd well	3rd well	4th well	5th well	6th well
Turbidity (mg/l)	1.5	-	1.4	1.0	-	0.8	-
pH	6.0-9.0	7.3	7.4	7.6	7.0	7.2	7.4
Alkalinity (mg equiv/l)*	**	5.8	5.7	6.8	7.3	5.0	5.7
Hardness (mg equiv/l)	7.0	6.7	5.7	7.0	7.3	7.0	5.7
Iron (Fe) (mg/l)	0.3	2.2	3.2	2.0	1.5	0.83	0.86
Chlorides (mg/l)	350	8.0	8.0	21.4	14.8	5.8	8.0
Oxidation suceptibility (mg/l)	**	1.29	1.28	1.7	1.1	1.6	1.3
Ammonium salts (mg/l)	**	0.05	0.09	0.23	0.35	0.25	0.09
Nitrites (mg/l)	** 1.0	0.006	0.2	0.08	0.008	0.018	0.009
Nitrates (mg/l)	45	0.3	0.01	-	-	0.2	0.2
Fluorine (mg/l)	1.5	0.3	0.12	0.8	0.3	1.9	1.6

*Substance equivalent is defined as weight amount which reacts with 1 weight unit of hydrogen.

The water subjected to treatment at the existing deironing station

** Russian standard unknown - Denotes US drinking water standard or lack of US standard

EXHIBIT 2
Air Quality Record

ОСНОВНЫЕ ПОКАЗАТЕЛИ ЗАГРЯЗНЕНИЯ АТМОСФЕРЫ

ТАБЛИЦА 1.5.1

	Наименование	ПДК (мг/м³)		Максимальные концентрации вредных веществ в приземном слое атмосферы				Примечание (учет фоновых концентраций)
		для населенных мест	для пром. площадки	На пром. площадке и в сан. защ. зоне		На границе сан. защ. зоны		
				величина в мг/м³	доли ПДК	величина в мг/м³	доли ПДК	
I	2	3	4	5	6	7	8	9
I2.	Уксусная кислота	0 2	I,5	0	0	0	0	–
I3.	Фенол	0 0I	0 09	<0 00I	<0 I	<0,00I	<0,I	–
I4.	Формальдегид	0 035	0,I5	0	0	0	0	–
I5.	Щелочи	0 5	0,I5	0	0	0	0	–
I6.	Диэтиловый эфир	I	240	0	0	0	0	–
I7.	Хлороформ	0.03(средсуточная)	–	0	0	0	0	–
I8.	Хлорамин	–	–	–	<0,I	–	<0,I	–
I9.	Окись углерода	5.0	6	<0.5	<0.I	<0.5	<0.1	учитывается
20.	Двуокись азота	0.085	0,6	0.18	0.3	0.026	0.3	– " –
2I.	Уайт-спирит	I 0	90	<0,I	<0.I	<0.I	<0.I	–
22.	Зола	0.15	–	–	<0.I	0.015	<0.I	–
23.	Общая пыль	0.5	0.6	<0,03	<0.05	<0.025	<0.05	учитывается

ТАБЛИЦА 1.5.1

	Наименование	ПДК (мг/м³)		Максимальные концентрации вредных веществ в приземном слое атмосферы				Примечание (учет фоновых концентраций)
		для населенных мест	для пром. площадки	На пром площадке и в сан. защ. зоне		На границе сан. защ. зоны		
				величина в мг/м³	доли ПДК	величина в мг/м³	доли ПДК	
I	2	3	4	5	6	7	8	9
	Группы суммаций:							
I.	Ацетон и фенол	–	–	–	< 0,I	–	< 0,I	–
2.	Сернистый ангидрид и двуокись азота	–	–	–	0,4	–	0.4	учитывается и SO_2 и NO_2
3.	Сернистый ангидрид двуокись азота, окись углерода и фенол	–	–	–	0,5	–	0.5	учитывается и SO_2, NO_2, CO
4.	Сернистый ангидрид и фенол	–	–	–	<0,1	–	<0,1	учитывается и SO_2

EXHIBIT 3
Listing of Environmental Agencies

П Е Р Е Ч Е Н Ь

организаций, с которыми требуется согласование проекта строительства

I. Институт иммунологии
2. Строительная организация
3. Генеральный проектировщик
4. Администрация Чеховского района
5. Санэпидстанция:
   - г.Чехова
   - Московской области
6 Гражданская оборона
7 Гидрологическая партия Моск.области
8. Пожарный надзор
9. Рыбная инспекция
10. Гидрохимическая лаборатория
II. Комитет по Гидрометеорологии
I2. Московско-Окское бассейное управление
I3. Архитектурное управление
I4. Любучанский завод пластмасс

Section VI

PROPOSED SITE

and

FACILITY PLAN

A. Facility Concepts and Design Assessment

1. Introduction

A preliminary design concept was generated after the initial programming. The concept was a generic design layout intended to meet US building requirements.

2. Building Configuration Concepts

Four alternative building configuration diagrams were generated as shown. Each of the four schemes makes use of the following concepts:

- Clearly sequential layout of the OPV and DTP processes. Although there may be as much as six month delay between the bulk batch and the fill steps, a sequential layout will help to avoid mix-ups of work-in-process from the production line to the warehouse and back to the production line again.
- Separation of the OPV (live virus) and the DTP processes. Building system design will be separated for these two process areas, but a physical separation is also necessary so that movement of people or equipment cannot cause cross-contamination.
- Isolated, or separate Quality Control facility to maintain cleanliness. The alternative schemes offer varying proximities to OPV and DTP Bulk Batch, Fill and Pack areas, the Warehouse and to Media Prep, each of which are areas that require quality control testing.
- It was a single story design layout.

Scheme D was selected as the building configuration that would serve as a basis for this study because it offered the greatest flexibility with the fewest disadvantages. The use of the main corridor offered some of this flexibility.

The design was forwarded to the subconsulting firm, John Brown (JBEC) along with the program, construction assumptions, design requirements, a cost estimate, and schedule. JBEC was contracted to review these relative to Russian regulations and construction practices.

SCHEME A

WAREHOUSE @ ONE SIDE

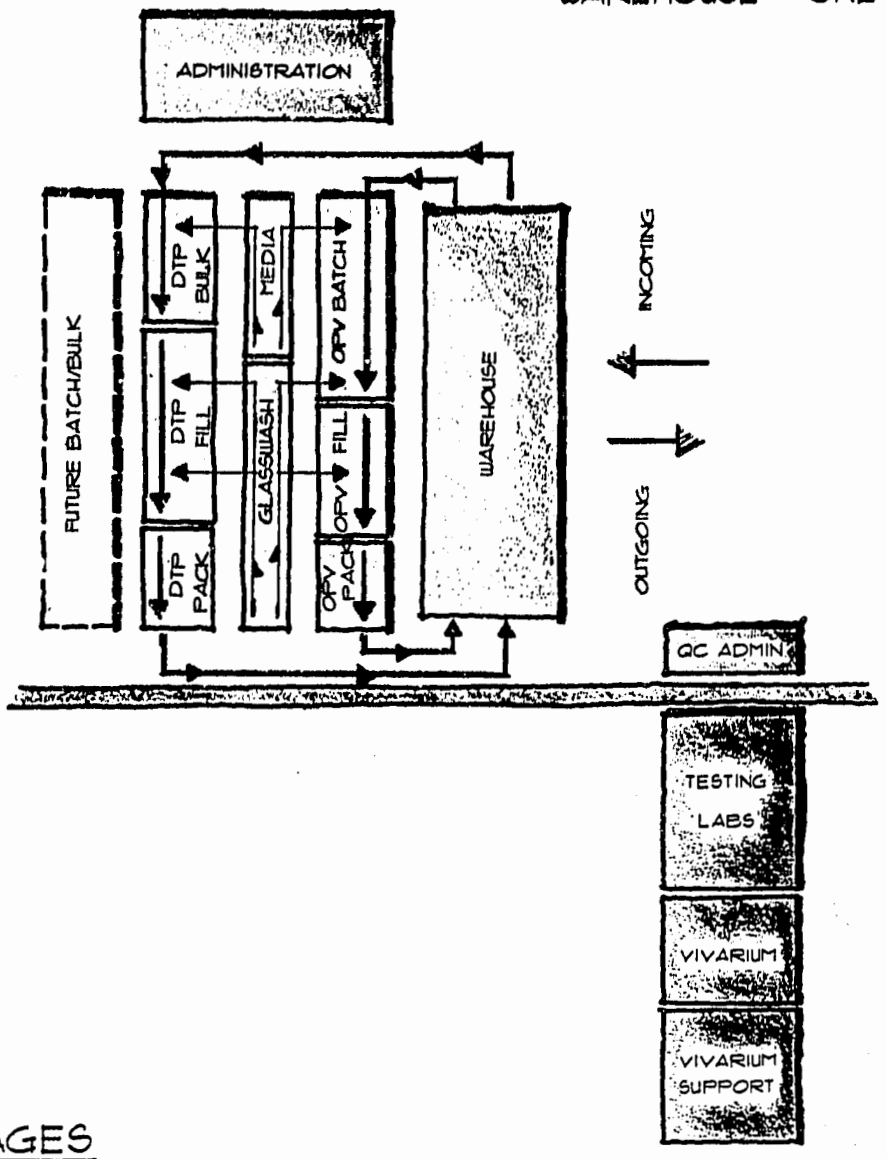

ADVANTAGES

- CLEAR SEPARATION OF INCOMING VS. OUTGOING
- CONTINUOUS BULK/FILL/PACK FOR OPV & DTP
- SEPARATION OF OPV VS.DTP PROCESS

DISADVANTAGES

- DISTANCE OF FUTURE LINES FROM SHIPPING, RECEIVING, STOR.
- DISTANCE OF STORAGE FROM DTP FILL & PACK
- OVERLAP OF DTP & OPV TRAFFIC
- MAY REQUIRE FIRE SEPARATION CONSTRUCTION

271

SCHEME B

WAREHOUSE @ ONE END

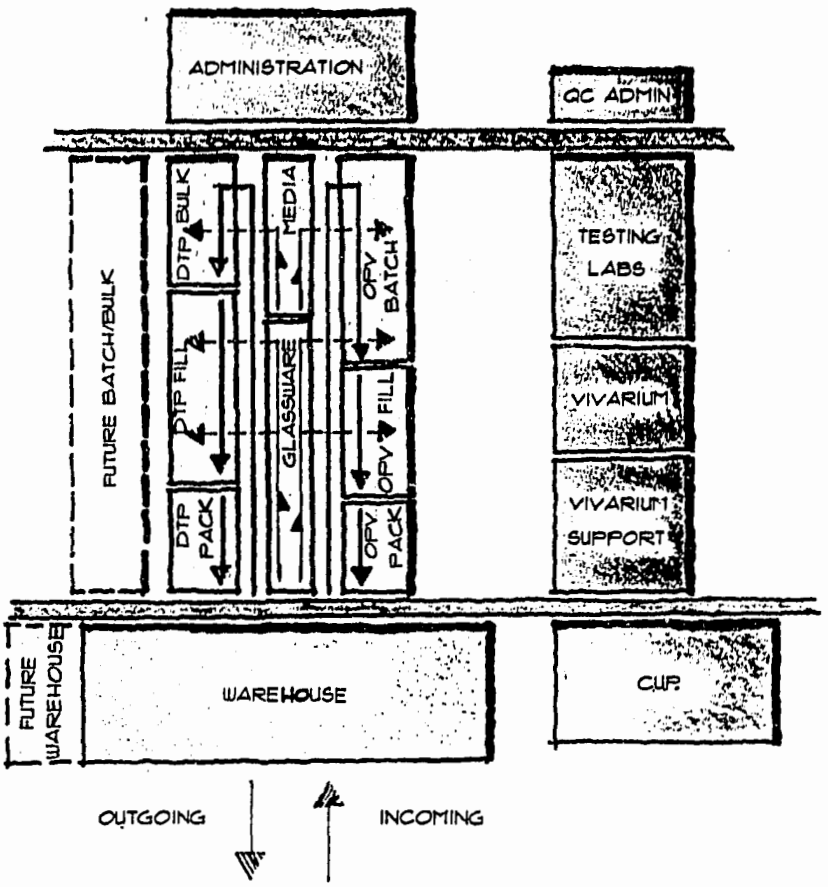

ADVANTAGES

- CLEAR SEPARATION OF OPV VS. DTP (TRAFFIC & PROCESS)
- CONTINUOUS BATCH/BULK/FILL/PACK FOR OPV & DTP
- FILL & PACK CLOSE TO STORAGE

DISADVANTAGES

- DISTANCE OF FUTURE GROWTH FROM WAREHOUSE

SCHEME C

WAREHOUSE BETWEEN LINES

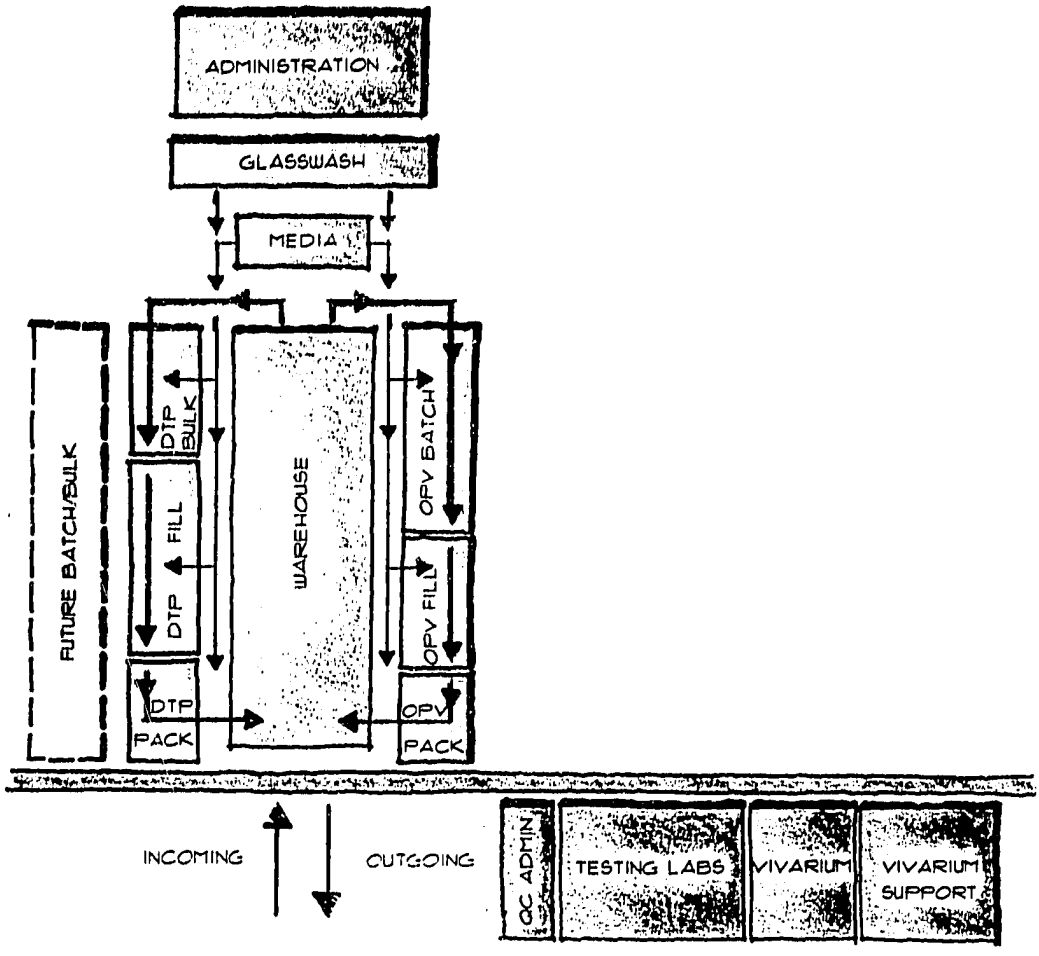

ADVANTAGES

- CLEAR SEPARATION OF DTP VS. OPV STORAGE & PROCESS
- CONTINUOUS BATCH/BULK/FILL/PACK FOR OPV & DTP
- FILL & PACK AREAS CLOSE TO STORAGE OF SUPPLIES

DISADVANTAGES

- DISTANCE OF GLASSWASH & MEDIA PREP FROM LINES

SCHEME D

QC BETWEEN BULK/FILL & PRODUCTIC

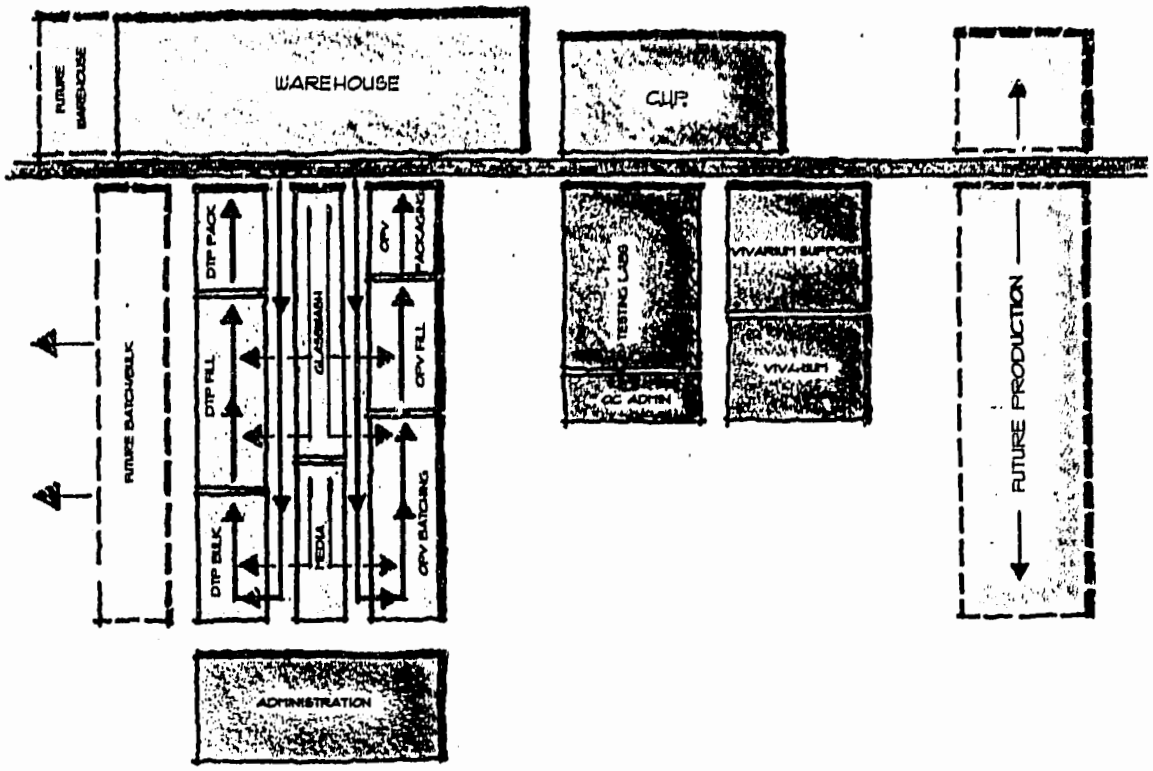

ADVANTAGES

- CLEAR SEPARATION OF OPV & DTP
- CONTINUOUS BATCH/BULK/FILL/PACK FOR OPV & DTP
- FILL & PACK CLOSE TO STORAGE
- SEPARATION OF QC

DISADVANTAGES

- DISTANCE OF FUTURE GROWTH FROM BATCH & FILL

274

Representatives of JBEC visited the proposed site, along with LPB, Flad, AEI, ERM, and Saphec representatives. The comments received from JBEC are included in Section VI.B.2.

The initial design concept was modified to fit the requirements and opportunities of the proposed site as well as to respond to JBEC comments and more specific engineering requirements.

B. Impacts of the Russian Methods on Facility Design

1. Construction Assessment

Materials

Almost all construction is precast concrete, including floor slabs, columns, walls and roof panels. Steel is available but rare. Redi-mix concrete is also scarce because redi-mix trucks are not readily available. It is common to see cranes sitting at construction sites to position the precast into place. Note the photographs on the following page that show two different construction sites, both with a crane, both using precast elements. Modules of 6 x 6m or 6 x 9m are among those commonly available for building construction. All sizes from 6m to 24m in 3m increments is necessary to match floor and wall panels.

Other Russian native materials include metal sandwich wall panels. JBEC indicated that these tend to be bigger and more massive than would be used in the US.

Neither the grade of building finishes nor the quality of construction that we were able to view was what would be necessary to meet cGMP requirements. They would also not meet general US company management expectations.

Given the need for economic construction and high quality facilities general recommendations are the following:

- Local materials should include the basic shell, e.g., precast concrete floor slabs, walls, roof panels and columns.

General Construction in Office Area
Moscow, Russia

Note the precast concrete construction which is so prevalent in the Moscow area. A crane is left at the site for long periods of time.

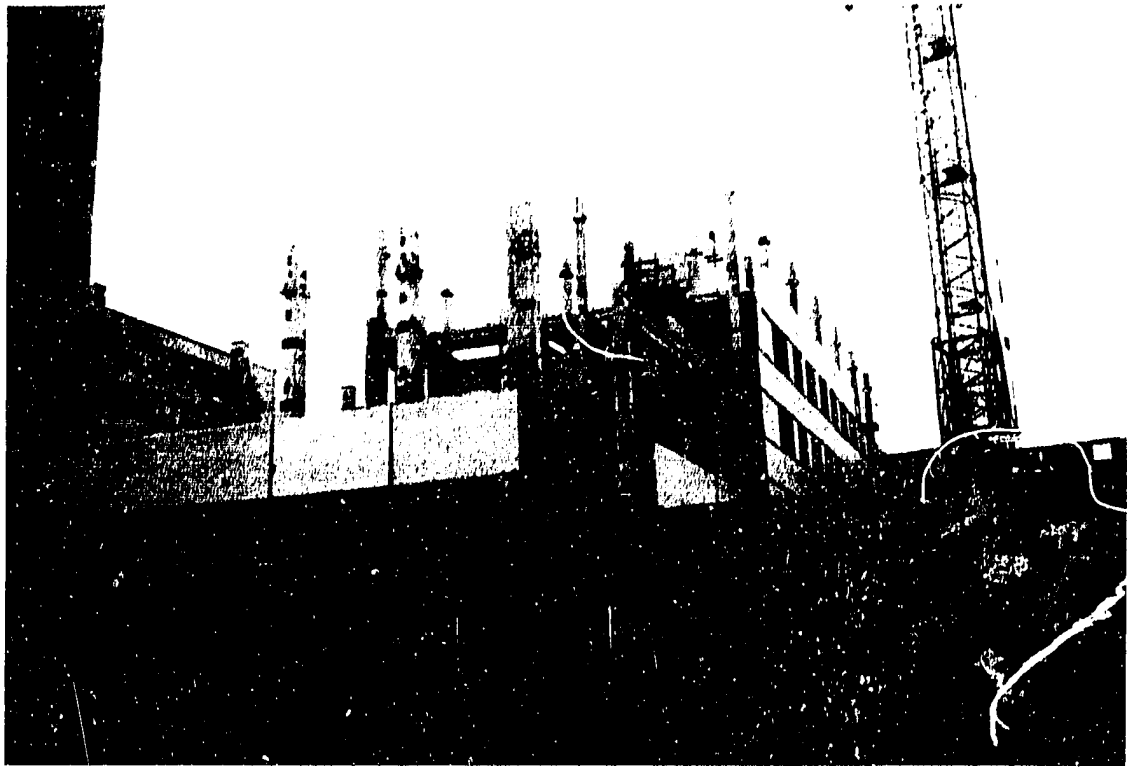

Vodka Bottling Plant
Lyubuchany, Russia

Precast construction is used for factories. Neither steel nor redi-mix concrete is common as a building material, although both are available.

216

are the following:

- Local materials should include the basic shell, e.g., precast concrete floor slabs, walls, roof panels and columns.
- Building finishes and specialty utilities such as process piping and electrical should be reviewed on a case-by-case basis, however it is likely that the majority would be assumed to be imported into Russia.
- Local construction labor may be appropriate for most construction . Some specialized foreign labor will be necessary for areas such as process piping arc-welding.
- Supervisors of each crew should be imported and held responsible for training and quality. This will most likely require more time for construction.

Schedule

According to JBEC, construction work in Russia is sequential. First the civil contractor does the underground work,foundations and building. They pack up, and then the mechanical contractor does their work. Third is the plumbing/piping contractor and fourth is the electrical. Windows and finishes follow this.

JBEC indicated that the resulting schedule and productivity prolongs the period of time required to complete a project. They indicate that this is typical for Russian construction but that it is possible to use western - type schedules with overlapping trades. (They achieved a 24 month schedule at Budyennovsk.)

Another reason for longer construction periods, is the prolonged winter snow season.

277

2. Design Assessment: Russian Regulations

This document defines the findings of the John Brown (JBEC) Specialist Pharmaceutical Group in connection with the requirement to "Russianise" the current Design Basis. This assessment is based on a single story design layout comparable to the configuration shown in Section VI.A.2.

JBEC has used its experience and involvement in Bulk Pharmaceutical Chemicals and dosage form projects for western companies considering Former Soviet Union (FSU) investment to derive these conclusions.

The study has evaluated the proposed layouts and the internal specifications with respect to the following considerations:

- GMP
- Layout/Design Principles
- Fire and Occupational Safety
- Environmental concerns

GMP

The proposals meet the general requirements of GMP as defined in the Russian standards for cleanrooms.

The Russian G.M.P. regulations follow the E.E.C. and The Orange Guide classifications. There are also regulations that are specifically Russian and would appear to have their origins in Russian conditions and construction standards. These include a requirements that clean rooms of grades 3 and above shall not be placed on an outside wall. This is not an issue with the current layout but there are Occupational Safety issues associated with internal rooms.

Layout/Design Principles

In the event that Russian equipment is proposed (services plant), due allowance should be made for the fact that it is some 50-100% larger than Western. Plant areas should be increased by some 30-50% if the joint venture partner is to supply this equipment.

It is noted that a 6m x 6m grid has been used together with the 9m x 6m grid and it presumed that a U.S. design firm is aware of the wide use of these in Russia in their standard pre-cast concrete structural system. If it is the intention to use such structural system it should be noted that the height units are in multiples of 1.2m with 4.8m being the most common use. It should also be noted that manufacturing times for these systems have always been extended and erection times slow.

The Russians have a preference with attendant Regulations for pipe distribution racks. Pipes serving one area are not permitted to pass another. Piped utilities are usually distributed externally on racks passing into the buildings where required. This may conflict with the most obvious route in the layout.

In connection with Warehousing, it should be noted that pallets are not generally available in Russia. Consequently pallets are depalletized directly into vans, railcars etc. When large numbers of movements are involved this affects efficient use of space in Despatch areas. Pallet manufacturing units are routinely installed within facilities to overcome this problem. It is anticipated that an internal pallet system will operate for GMP/control purpose.

Fire and Occupational Safety

Russian regulations which apply are:

- VSN 64-064-88 Instructions on construction design of enterprises of medical and micro-biological industry.

- SNiP 2.01.02-85 Fire and Safety Design Standards.

- SNiP 2.09.02-85 Building Code.

- SN 245-71 Sanitary Protective Zones.

Although no major difficulties in relation to the existing design are observed, the following points are worth examining at the next stage.

(i) The existing site operations dictate a sanitary corridor 500 m wide around the site. However, it may be possible to classify the new facilities (in particular the production building) as Class V (within SN 245-71) for Finished Medicinal Production (corridor 50 m wide). This might release more space for the new development.

(ii) The new buildings cannot be linked by ground level corridors because of the requirement for 30 m segregation and access to all sides for fire appliances. A gallery at >4.5 m above ground and courtyard access 15 m wide would resolve this.

(iii) The existing proposed single floor production building has escape travel distances too long to meet the requirements based on the current interpretation of classification of use.

A multi-story option would resolve this comparatively easily and in materials/personnel flow terms achieve the requirement.

The Russian Regulations are very similar to those of the U.S. in that they require:

(i) Sanitary corridors around sites.

(ii) Access between buildings for fire-fighting purposes.

28

(iii) A system that breaks down the volume of a building into fire resisting compartments with the openings between protected by doors or shutters of rated fire resistance.

(iv) Staircases to be enclosed to provide protected shafts vertically with self-closing fire rated access door with direct exits to the outside. Such staircases are sited at points to always provide alternate means of escape with fire protected corridors providing links to these where a series of individual rooms obtain. Escape distances from rooms are varied according to the risk and the total distance of travel is controlled.

Our interpretation of the Russian regulation is as follows:-

(i) The sanitary corridor around the existing site operations needs to be 500 m wide. The sanitary corridor around a Finished Medicinal Production site (Class V) is 50 m.
It could be argued that the plant receives a finished medicinal product and therefore Class V applies. This could release site space and be beneficial to the layout.

(ii) The distance between buildings should generally be 30m, and fire-fighting access is required on all sides. This dictates changes to the initial layout.

(iii) The distance to escape routes for the Media Prep and glasswash area, as shown on the sketch, exceed the maximum distance permitted based on the table included in the appendix.

(iv) Fire escapes around the perimeter of the building should be at a minimum interval of 200 m.
Emergency exits shall be decentralized and emergency exits from a room shall be not more than $1.5 \div P$ (where p = perimeter of room).
Clean areas will be without the proscribed access to natural light and therefore if they are greater than 200 m^2 they will need internal glazing. Since there is increasing use of glazed walls for clean rooms this is not an issue.

The fire alarm system proposed appears to exceed the statutory regulatory requirements but there is legislation covering alarm systems for evacuation and defection systems. The same applies to sprinkler and fire fighting systems.

There are a plethora of regulations covering explosion risk, solvents use of dust hazard. Since these are not directly applicable to this facility it is sufficient only to be aware of their existence. It is important to remember, however, that no area, not even a gallery that can be accessed by people should be located over any equipment having an explosion risk.

Environmental

The requirement for biologically and chemically inert waste discharges is no different from U.S. norms.

Russian regulation requires all wastes discharging into the municipal drainage systems to be biologically and chemically inert and all solid wastes to be decontaminated before disposal or be destroyed by incineration. This will likely be provided since it is no different from European norms.

Specific regulations covering laboratories and animal houses appear to be equivalent to western legislation. These will need to be reviewed in due course but for the initial planning requirements it is sufficient to recognize that animal buildings must be to windward of other buildings.

Animal Facilities

Animal facilities should be placed in outlying areas and windward to other buildings.

Solvents

Small quantities of solvents (1-2 days usage) can only be held within the building in a separate room equipped with fire-fighting systems and a separate exit.

282

Conclusions

The issues raised in connection with Layout Fire/Occupational Safety should be considered in any further design development.

In broad terms a three story production building with production at Level 1 (ground) and Level 3, Media Prep. and Glassware on Level 2 and an adjacent warehouse should be considered.

Central core elevators and stairs would solve the escape distance problems.

Laboratories and animal houses could remain linked to the main building via a gallery.

The use of pallets in the warehouse should be considered within the context of a company's policies on distribution.

3. Proposed Site and Facility Design

Alternative site plans were considered and the preferred plan labelled "Proposed Site Plan" in this section was chosen. Some of the key features of this plan include the following:

- A service "courtyard" shown at the west side of the proposed construction which is used for truck receiving and shipping. This method of configuring the product and material access and egress points offers a higher degree of control over the movement of goods.
- A grouping of "people functions" at the southwest side of the proposed new construction. This relates to the existing IoI locations of people functions. The people-intense functions in the proposed facility include the Administration Building, the Manufacturing Building and QC Test Labs.
- Prevailing winds are from the southwest. This configuration offers the opportunity for the cleanest air intake (during prevailing wind conditions) for the key QC and Manufacturing Buildings. Subsequent, more detailed, studies should align the exhaust of the QC Building so that it is not aligned with the intake of the Manufacturing Building.
- An access road is provided around the north and east sides of the project. This road is intended for fire access. It would be proposed that the gate be configured for emergency entrance and egress only.
- Direct adjacency is provided for the warehouse to the manufacturing building that it supports.
- The Central Utility Plant provides fairly direct routing for services needed for the facilities. The most critical users are the QC facility and the Manufacturing facility. Although the proximity to Manufacturing is good, the distance from QC is not as close as desirable. Subsequent phases involving more detailed design may reconsider the tradeoffs of this location configuration with other options that may also maximize the best wind direction and people interaction.
- Security for the site is proposed to be provided by extending the IoI security fencing around the new facility. A guard station/reception area is located within the Administration complex. Alternatively, a standalone gate-house could be located at the southeast corner of the site.
- Minimal parking spaces have been provided in this plan. Culturally, very few employees are expected to drive to work, with most employees using mass transit or IoI buses. Visitor and administrative spaces only have been shown. In the future, if private

286

transportation becomes more prevalent, additional parking stalls may be required.

- Lockers/showers/restrooms are located at the entrance to the respective areas in which the employees will work.

The layouts of the specific buildings within this complex are described below. Conceptual layouts of the following proposed buildings are included in this section.

Manufacturing

The building was redesigned to a three story configuration for several reasons: it helps to minimize the site coverage which would have been overwhelming at this site and it reduces the exit access travel distance, the requirements for which appear to be shorter in Russia than in the US. The design configuration has been derived by use of the following key concepts:

- Isolation of the OPV(Polio) suite from DTP suite and other activities. Separate support areas including restrooms, showers, lockers, housekeeping, breakrooms, conference room, and management offices are dedicated to each of the three sets of activities and are separated by floor as follows:
  - 1st Floor - DTP Bulk Batch, Fill and Pack
  - 2nd Floor - Media Prep and Glasswash
  - 3rd Floor -OPV Bulk Batch, Fill and Pack
- Minimize work-in-process movement through the facility. This was accomplished by arranging processing as well as storage freezers and chillers in a sequential, linear configuration. This would help to avoid any potential product mix-up which could be attributable to the added problem of language confusion.
- GMP separation of work-in-process from outgoing product. Building corridors have been arranged to allow a clockwise circulation so that materials that come into the building do not cross paths with outgoing product.
- Air locks with restricted access are required for entrance to or exit from each floor. Additionally, a sequence of three air locks (equipment in or out, people in, and people out) are provided for access for each of the cleanroom areas within the building.

Warehouse

The warehouse is a very key, integral component supporting the manufacturing function. The design of this one story building is driven by the following key concepts:

- Separation of incoming work-in-process and materials from outgoing product. Outgoing product is stored in the chillrooms (for DTP) and freezers (for OPV) in the warehouse. These chillrooms and freezers are located closest to the manufacturing building in the southeast part of the warehouse.
- Incoming work-in-process product is taken directly to a freezer or chillroom at the far side of the manufacturing building. These shipments are infrequent.
- Other incoming materials are substantial in volume and need to be closest to the areas that they support, including Fill and Packaging areas for both OPV and DTP. These parts of the manufacturing building are located closest to the warehouse. These storage areas are located near manufacturing on the northeast side of the warehouse.
- Package label and inspection, staging, etc. are at the southwest end of the warehouse, nearest the actual shipping and receiving dock.
- Other support areas including shop, garage, etc. are located together and at the northwest end of the warehouse.

Quality Control Vivarium

The design of this first story of the two story Quality Control building accomplishes the following key concepts:

- Separation of breeding suite from animal test suite.
- Dedicated areas in both of the above animal areas include restrooms, showers, lockers, housekeeping, breakrooms.
- Entrance to the suite is through the shower, locker, restrooms at one end (people access) of each suite. Emergency air lock egress is provided at the other (support) end of the corridor in each suite. Supply and waste access is through rooms at the support end of the suites.
- Separation of incoming supplies and traffic from outgoing materials and traffic in the support areas.

Quality Control Test Labs

The design of this second story of the two story Quality Control building is based on the following key concepts:

- Central location of support facilities for easy access to all of the four labs and for easier access to the staffs who maintain supplies.
- Exterior windows, i.e., natural lighting, for labs.

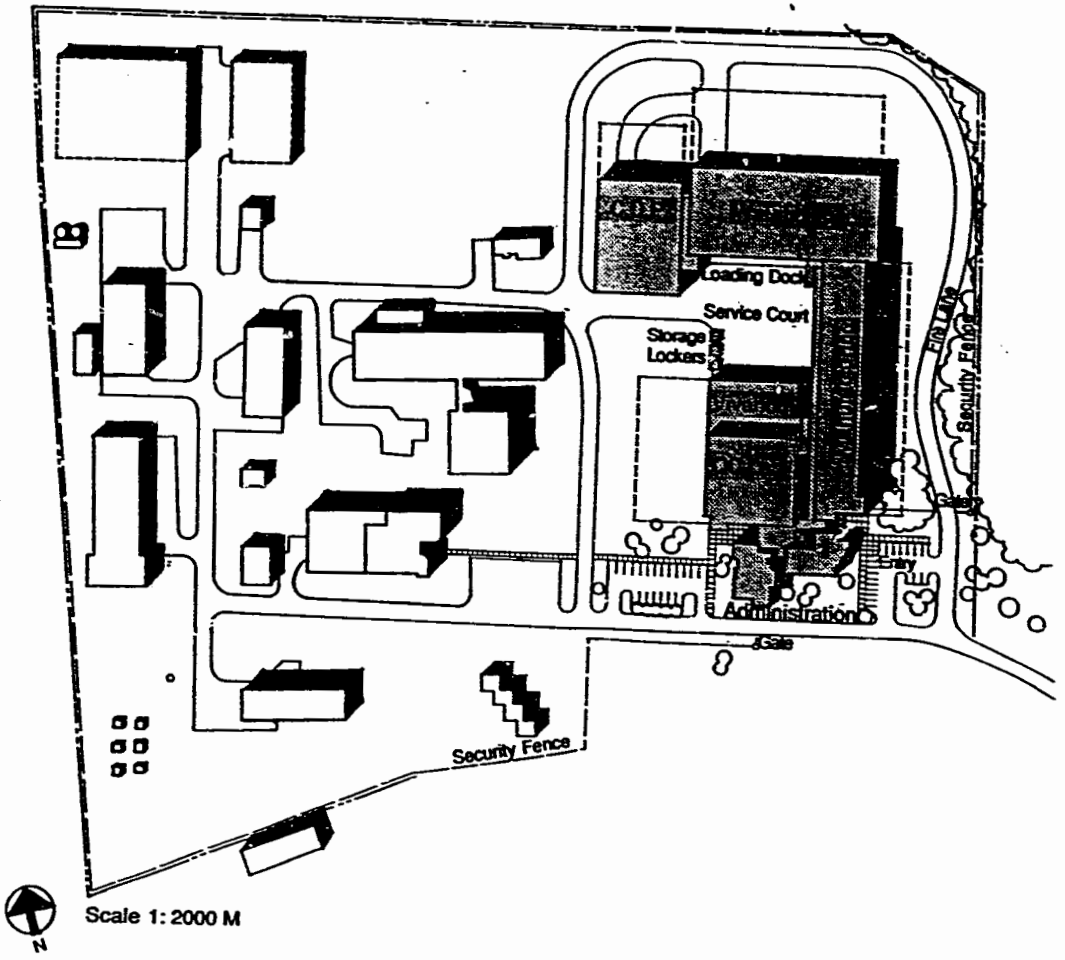

Proposed Site Plan
Lyubechany Site

Fluor & Associates, Inc.
NIS Feasibility Study, 92210-00

6.29

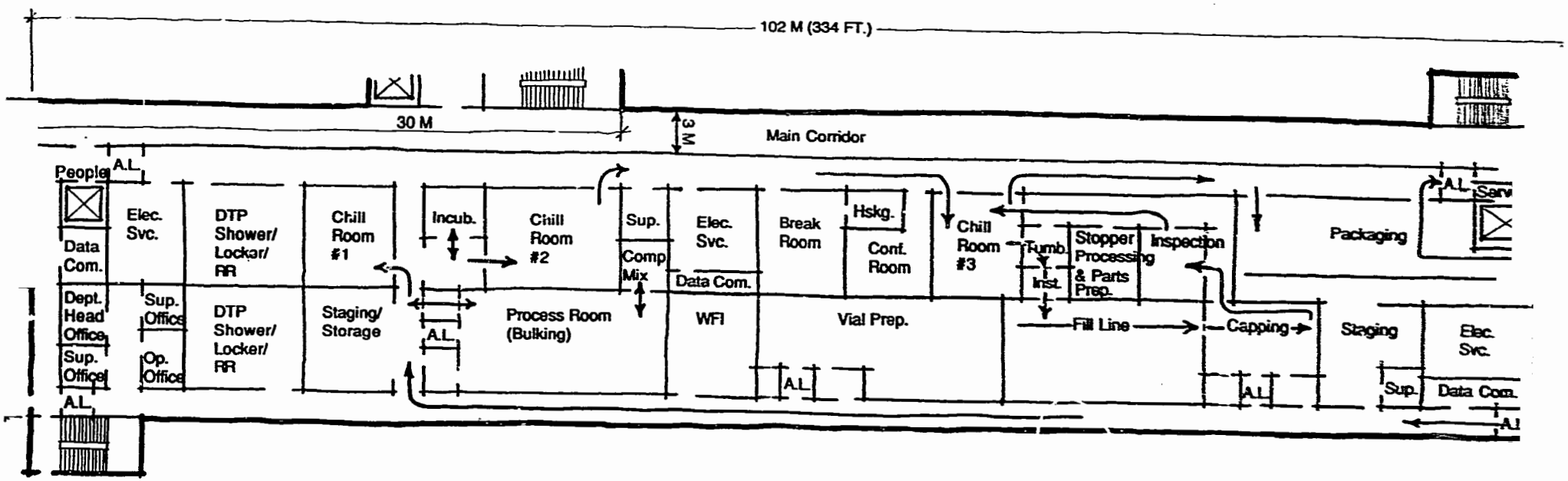

Scale 1:250

DTP Manufacturing
First Floor Plan

Fluid & Associates, Inc.
NIS Feasibility Study, 92210-00

a.20

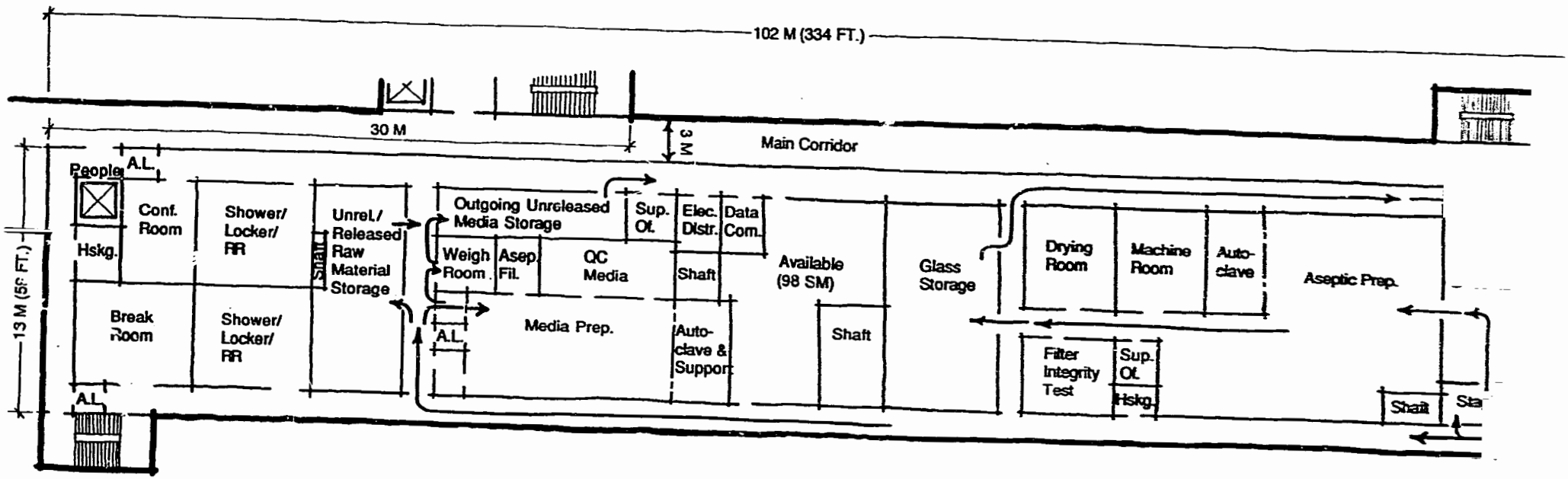

Scale 1:250

Glasswash/Media Prep
Second Floor Plan

Flad & Associates, Inc.
NIS Feasibility Study, 92218-10

6-21

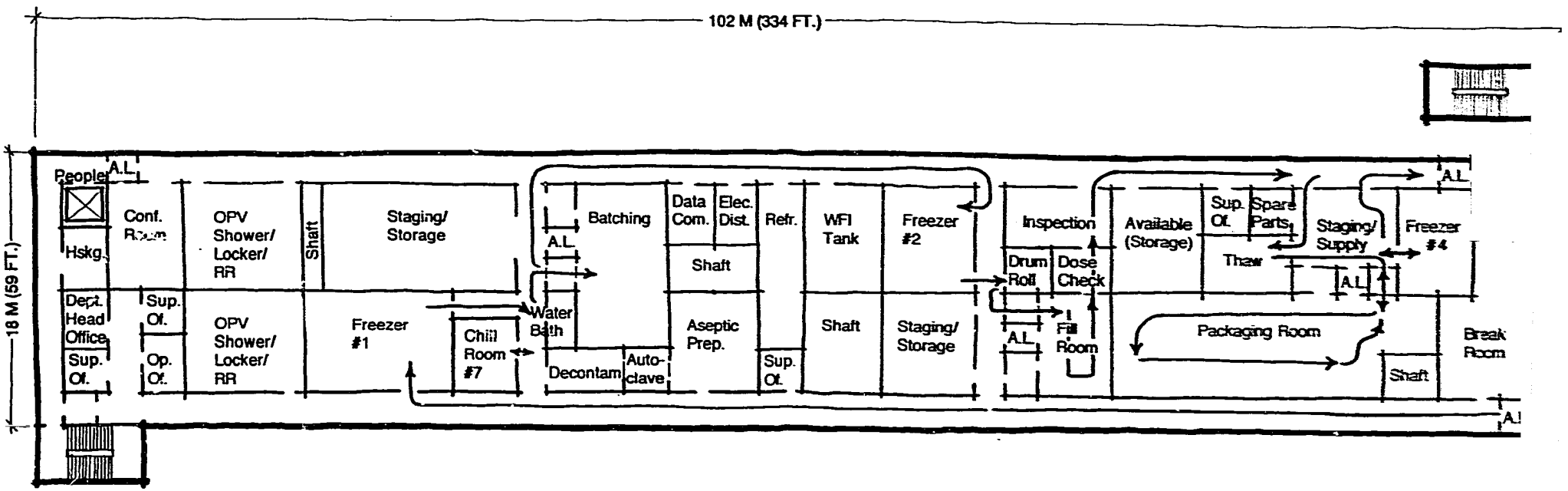

Scale 1:250

OPV Manufacturing
Third Floor Plan

Fluor & Associates, Inc.
NIS Feasibility Study, 92270-00

6.22

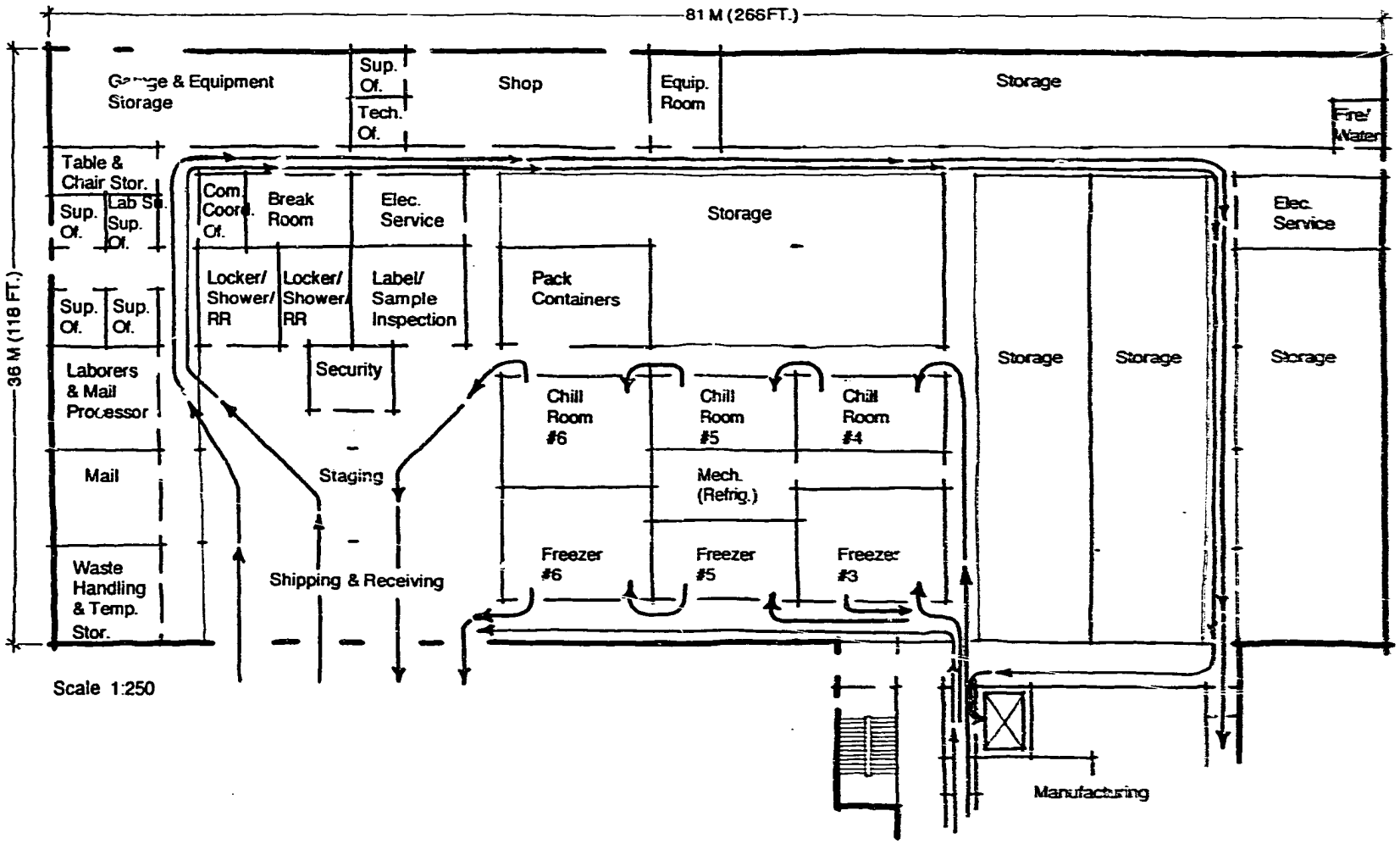

Warehouse
Floor Plan

Fluor & Associates, Inc.
MIS Feasibility Study, 92250-00

6.23

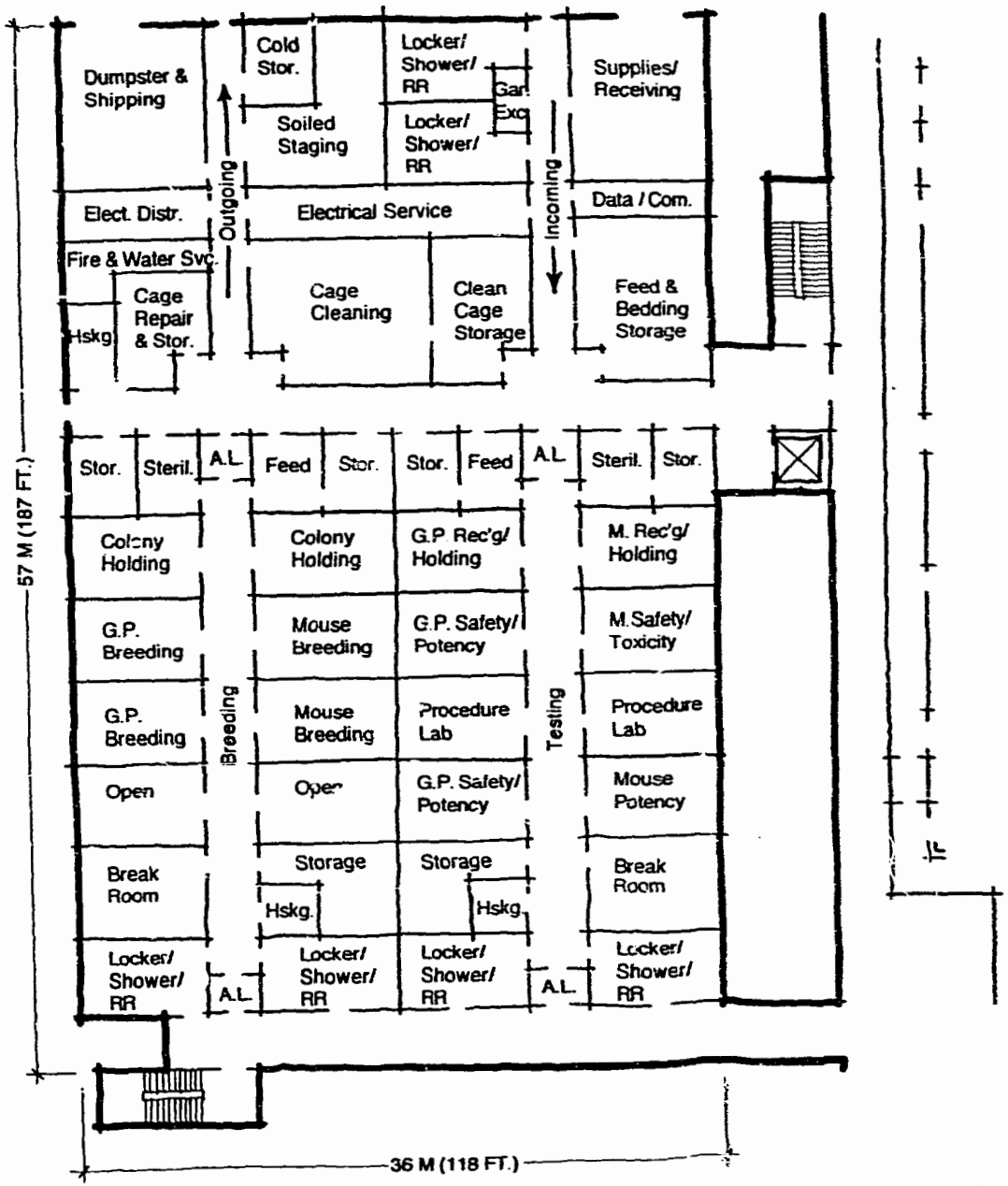

QC Vivarium
First Floor Plan

Flad & Associates, Inc.
MIS Feasibility Study, 92210-00

6.24

192

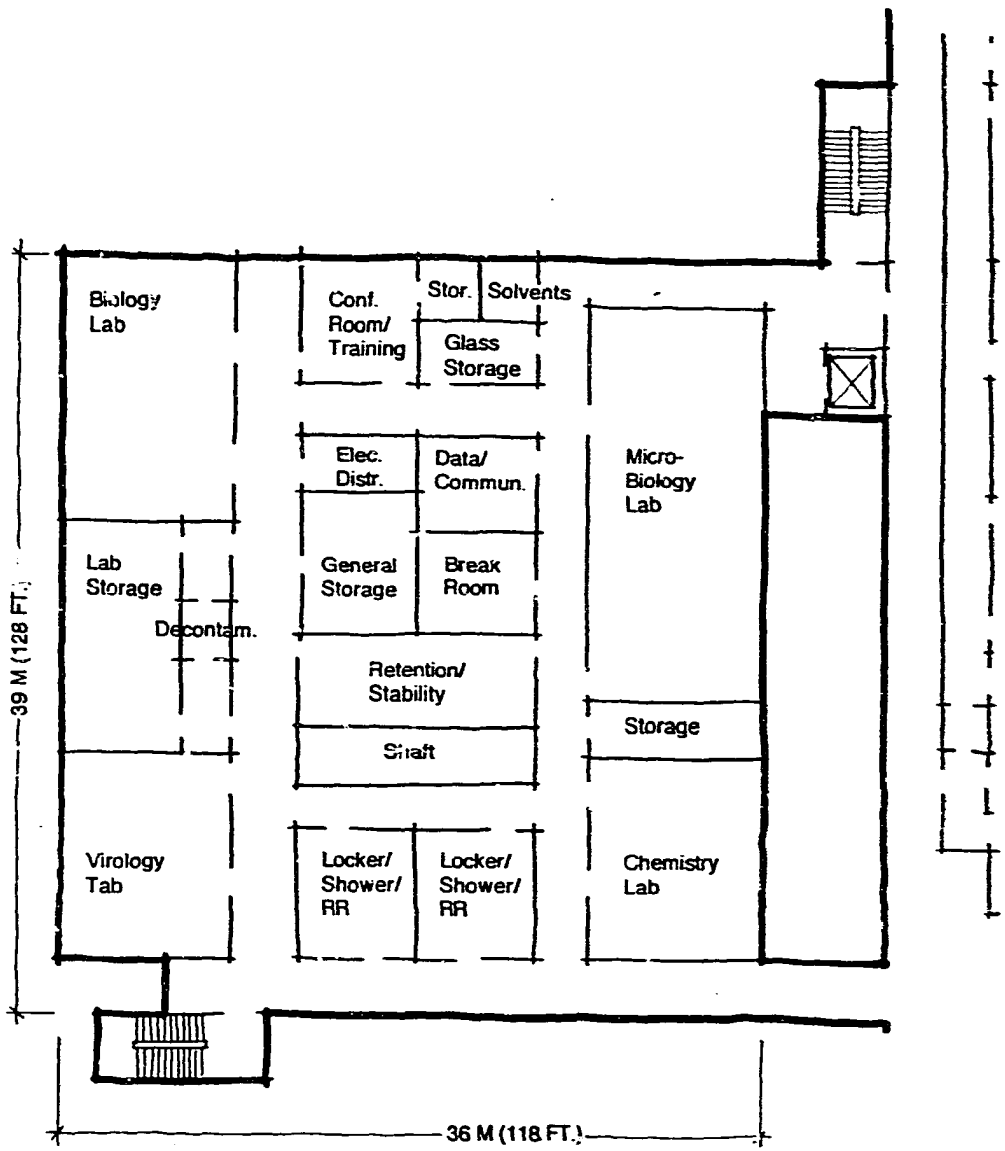

Scale 1:250

QC Test Labs
Second Floor Plan

Flad & Associates, Inc.
NIS Feasibility Study, 92220-00

6.25

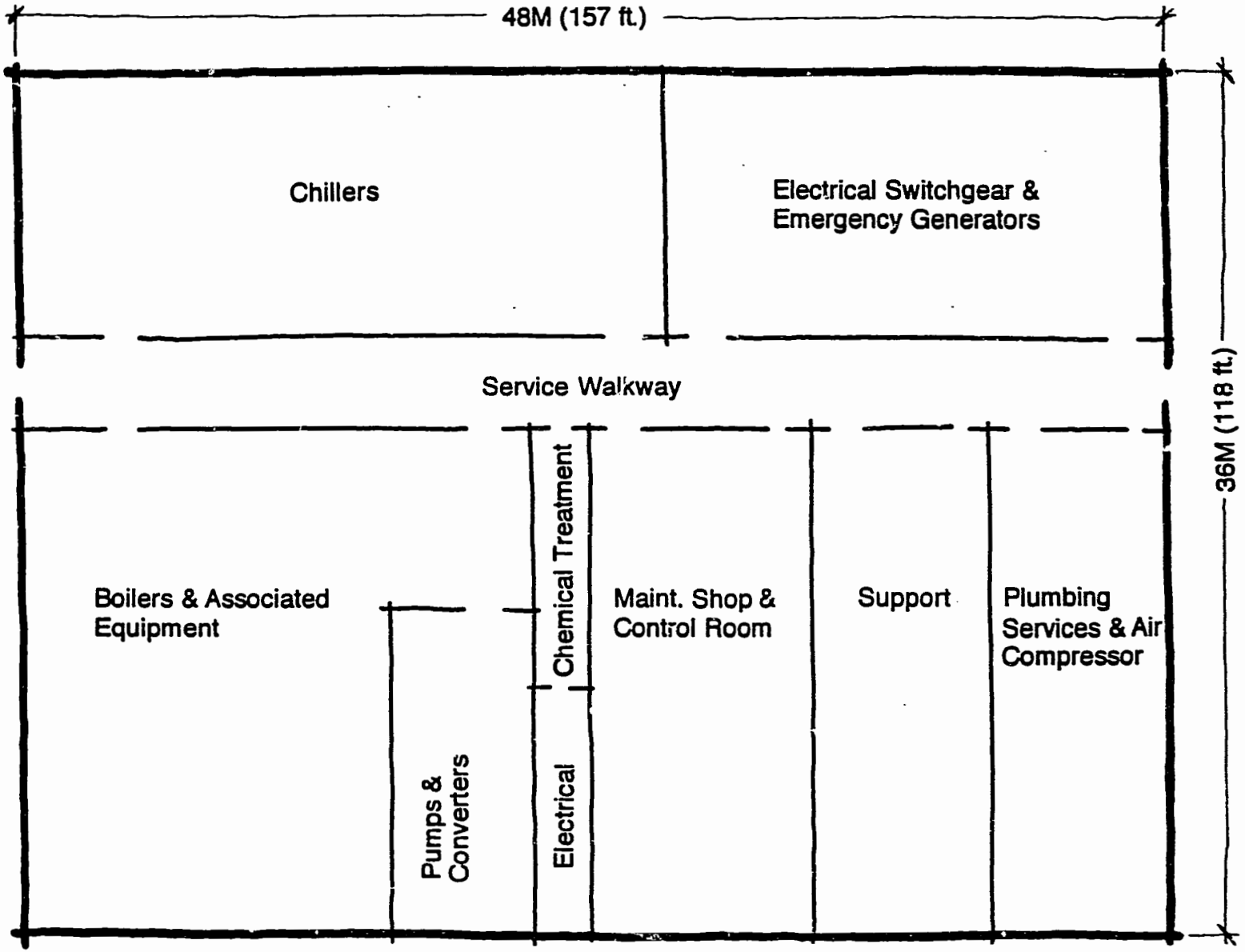

Scale 1:250

AEI

6.26

Central Utility Plant
Floor Plan
NIS Feasibility Study, 92210-00

4. Summary: Building and Utility Area Analysis

The following page summarizes the area required in the revised building plans. The area is shown in both US and metric numbers. The programmed net square feet is also shown. An efficiency is calculated for each building and another is calculated for the complex overall. These figures are typical of comparable facilities in the US.

Utility areas are also shown in metric and US numbers by building, by floor, and overall, with % usages of each building and overall calculated.

Building heights are also provided in meters to facilitate cost calculations.

Building and Utility Area Analysis
Design Assumptions

Building	Space Designation	Proposed GSF	Proposed GSM	Program NSF	Proposed Utility SF	Proposed Utility SM	Building Height (M) Flr to Clg	Building Height (M) Structure	Penthouse Height (M) Flr to Clg	Penthouse Height (M) Structure	Total (M)
Manufacturing	First Floor	23,963	2,227		2,100	195	4.8	1.2			
	Second Floor	23,737	2,206		650	60	4.8	1.2			
	Third Floor	20,638	1,918		1,530	142	4.8	1.8			
	Penthouse	9,800	910		9,800	910			3.6	0.6	
	Subtotal	78,137	7,261	35,606	14,080	1,308	14.4	4.2	3.6	0.6	22.8
	Efficiency/Usage			46%		18%					
Quality Control Labs & Vivarium	First Floor - Vivarium	23,694	2,202		1,100	102	4.8	1.2			
	Second Floor - QC	16,431	1,527		900	84	4.8	1.8			
	Penthouse	5,600	520		5,600	520			3.6	0.6	
	Subtotal	45,724	4,249	21,282	7,600	706	9.6	3	3.6	0.6	16.8
	Efficiency/Usage			47%		17%					
Warehouse & Support	First Floor	31,376	2,916		1,300	121	6	1.8			
	Penthouse	1,800	167		1,800	167			3.6	0.6	
	Subtotal	33,176	3,083	29,954	3,100	288	6	1.8	3.6	0.6	12
	Efficiency/Usage			90%		9%					
Administrative (assumed)	Admin (3 Floors))	15,090	1,402		600	56	7.2	1.8			
	QC Admin	3,369	313			0					
	Penthouse	1,200	111		1,200	111			3.6	0.6	
	Subtotal	19,659	1,827	12,926	1,800	167	7.2	1.8	3.6	0.6	13.2
	Efficiency/Usage			66%		9%					
Central Utilities Plant	First Floor	18,600	1,728				6	1.8	3.6	0.6	
	Subtotal	18,600	1,728		18,600	1,728	6	1.8	3.6	0.6	12
	Efficiency/Usage					100%					
Interaction Space		9,300	864								
Total		204,595	19,013	99,768	45,180	4,197					
	Efficiency/Usage			49%		22%					

5. Key Questions Answered by John Brown/Saphec

1. What Russian Regulations control the siting of a Production plant producing human vaccines?

   Design of the plants producing vaccines and serums is carried out in accordance with "Instruction on construction design of enterprises of medical and micro-biological industry". BCH 64-064-88.

2. What specific regulations control the distances production buildings laboratories and animal houses must be from other buildings adjacent to the site and from each other.

   Environmental protection zone is identified in accordance with CH-245-71. The distances from the process buildings (with vaccines and bacterial remedies) to the other buildings - not less than 30 meters (p.3.4 "Instruction ... ").

   Design of buildings with half-closed yards, as well as buildings which form closed yards". ("Instruction .... ").

3. What are the specific regulations controlling the discharge of treated biological wastes and treated chemical wastes.

   Sewerage system design is to be carried out in accordance with BCH 64-064-88.

4. What are the regulations covering the siting of animal houses within the district in which the site is located.

   "Vivarium, inspection and laboratory buildings included into the complex are to be placed in the outlying areas at the windward side from the other buildings". (p.3.6).

5. What are the regulations covering the discharge of animal wastes into the public sewerage system.

   There are no limits for discharge of the waste waters from vivarium and sewerage system. Nevertheless waste waters containing micro-organisms are to be decontaminated in accordance with BCH 64-064-88.

6. What are the regulations covering the discharge of gases from fume hoods, biological safety cabinets and incinerators. What is the height of discharge required above adjacent buildings and permitted levels of discharge.

   The ventilation system design is to be carried out in accordance with BCH 64-064-88 taking into account the level of hazard within the building.

7. *What regulations cover the storage of small quantities of solvents (max 100 liters) within small containers in a production area for use within a fume hood for testing purposes.*

Only exchange quantity of solvents can be stored within the process area. The quantity for 1-2 days usage is to be stored in the separate room with the exit. The automatic fire-fighting system is to be provided within the area.

8. What are the specific regulations contained within the Fire Safety Regulations covering the following:-

   (a) Means of escape from a room from the furthest point in one direction or two or more directions ie the total distance of travel into a protected corridor or shaft, for high, normal or medium risk situations.

   (b) What is the maximum distance of travel permitted for escape from starting point to the final exit from the building.

The fireproof level for the buildings and plants should be not lower than II.

Crossing of personnel and process flows are not acceptable.

Quantities of entrances and exits as well as length, width and height of evacuation routes are identified by CH II 2.09.02-85

Extract from BC 2.09.02-85

Room volume, thous m³	Room category	Building firesistance degree	Distance, m, at density of stream of personnel in common passage, man/m²		
			Up to 1	Over 1 to 3	Over 3 to 5
Up to 15	A, B	I, II, IIIa	40	25	15
	C	I, II, III IIIa	100	60	40
		IIIb,IV,	70	40	30
		V	50	30	20
30	A, B	I, II, IIIa	60	35	25
	C	I, II, IIIa	145	85	60
		IIIb, IV	100	60	40
40	A, B,	I, II, IIIa	80	50	35
	C	I, II, III IIIa	160	95	65
		IIIb, IV	110	65	45
50	A, B	I, II, IIIa	120	70	50
	C	I, II, III IIIa	180	105	75
60 and more	A, B	I, II, IIIa	140	85	60
60	C	I, II, III IIIa	200	110	85
80 or more	C	I, II, III IIIa	240	140	100
Regardless of volume	D, E	I, II, III IIIa	Unlimited		
		IIIb, IV	160	95	65
		V	120	70	50

Notes:

1. The density of stream of personnel is defined as a ratio of the number of persons clearing the building through the common passage to the area of this passage.
2. For rooms with an area in excess of 1000 m², the distance indicated in Table 2 includes the length of the way in the corridor until the exit to the outside or to the staircase.
3. The distances for the rooms of categories A and B are established with due regard for the area of spillage of highly inflammable or combustible fluids equal to 50 m².

C. Construction Cost Estimate

1. Overview

This cost estimate was generated through several sources and took advantage of the multiple perspectives needed to generate the data. It involved the following three steps:

1. Development by Flad/AEI of a US-based estimate for a facility that meets LPB production needs and US production and building requirements. (Part VI.C, Section 2)

2. Comments by John Brown Engineers and Constructors Limited (JBE&C) regarding Russian design, construction practices and regulations, and cost and schedule implications. (Part VI.C, Section 3, Bases for Conversion)

3. Modification of the design, schedule, process assumptions and cost estimate assuming construction in Russia. Development of a cash flow estimate. (Part VI.C, Section 3)

All costs are shown in 1993 currencies so that LPB can handle inflation/escalation assumptions consistently in the Financial Analysis section of this report.

2. US Cost Estimates

The first step of the cost estimate assumed construction to take place near Raleigh, North Carolina, USA. The estimate includes material, labor, shipping and scheduling for a Raleigh, North Carolina location.

Assumptions

Construction and Materials

In general, construction assumptions included the following:

- Face brick over concrete block walls (to match the appearance at the Institute of Immunology)

- Steel framing roof structure and columns.

- Single ply roof, ballasted and 3" insulation.

- Foundations - concrete spread footings

- Mechanical penthouse includes steel frame roof and column structure. Clad in insulated metal wall panels. Air handlers located in penthouse.

- Skilled construction trades are in ample supply.

- Any abnormally high site cost increases such as the potential requirements for abnormal foundations due to the clay soils are not included in the costs. A reasonable cost is assumed at this time.

- Utilities are assumed to extend from the existing on-site termini.

Building height and configuration assumptions are summarized on the chart entitled "Building and Utility Area Analysis" in Section VI.B.4.

Construction Cost Estimate Summary
Based on Assumed Rates for Construction in North Carolina ($000')

Item	Notes	Manu-facturing	Quality Control	Warehouse	Central Utility Plant	Admin Offices	Site	Total
Direct Construction Costs								
1. General Construction		$8,930	$4,666	$3,346	$1,643	$1,644	$0	$20,229
2. Process Piping Systems		$3,858	$1,447	$166	$286	$0	$0	$5,757
3. Piping, Fire Protection		$341	$225	$168	$105	$142	$0	$981
4. Mechanical/HVAC		$5,512	$3,262	$480	$3,502	$366	$0	$13,122
5. Electrical		$1,088	$972	$325	$1,144	$197	$0	$3,726
6. Instrumentation		$330	$165	$0	$0	$0	$0	$495
7. Process Equipment		$12,784	$2,322	$0	$98	$0	$0	$15,204
8. Site Development		$0	$0	$0	$0	$0	$2,149	$2,149
9. Site Utilities		$0	$0	$0	$0	$0	$1,325	$1,325
10. Other Shipping		$0	$0	$0	$0	$0	$0	$0
11. Construction Subtotal	Sum of 1 - 10	$32,843	$13,059	$4,485	$6,778	$2,349	$3,474	$62,988
12. Inflation Allowance	0% per year	$0	$0	$0	$0	$0	$0	$0
13. Design Contingency	25% of 11	$8,211	$3,265	$1,121	$1,695	$587	$869	$15,747
14. Total Direct Construction	Sum of 11 - 13	$41,054	$16,324	$5,606	$8,473	$2,936	$4,343	$78,735
Indirect Construction Costs								
15. Cyanamid Engineering		$300	$200	$200	$100	$100	$0	$900
16. Telephone/Comp. Sys.		$96	$200	$50	$20	$150	$0	$516
17. Fees/Permits		$3,828	$1,868	$1,062	$1,112	$562	$0	$8,432
18. Office Furnishings		$200	$258	$140	$54	$356	$0	$1,008
19. Site Survey		$0	$0	$0	$0	$0	$14	$14
20. Environmtl. Assmt. Fees		$0	$0	$0	$0	$0	$115	$115
21. Soil Testing		$0	$0	$0	$0	$0	$94	$94
22. Indirect Cost Subtotal	Sum of 15 - 21	$4,424	$2,526	$1,452	$1,286	$1,168	$223	$11,079
23. Inflation Allowance	0% per year	$0	$0	$0	$0	$0	$0	$0
24. Contingency	25% of 22	$1,106	$632	$363	$322	$292	$56	$2,770
25. Total Indirect	Sum of 22 - 24	$5,529	$3,158	$1,815	$1,608	$1,460	$279	$13,848
Start-Up Costs								
26. Telephone/Comp. Sys.		$136	$62	$25	$29	$13	$0	$265
27. Moving Expenses		$0	$0	$0	$0	$0	$0	$0
28. Decontamination		$25	$15	$16	$7	$0	$0	$63
29. Spare Parts		$862	$285	$23	$106	$35	$27	$1,338
30. Commissioning		$172	$86	$9	$9	$9	$0	$285
31. Validation		$2,452	$781	$55	$257	$85	$64	$3,694
32. Subtotal Start-Up	Sum of 26 - 31	$3,647	$1,229	$128	$408	$142	$91	$5,645
33. Inflation Allowance	0% per year	$0	$0	$0	$0	$0	$0	$0
34. Contingency	25% of Ln. 32	$912	$307	$32	$102	$36	$23	$1,411
35. Total Start-Up	Sum of 32 - 34	$4,559	$1,536	$160	$510	$178	$114	$7,056
Construction Total		$51,142	$21,018	$7,581	$10,590	$4,574	$4,735	$99,639

LEDERLE - PRAXIS BIOLOGICALS
Project Cost Summary - Manufacturing
FLAD & ASSOCIATES/AFFILIATED ENGINEERS
PROJECT NO.: 92210-00

-L SQ FT 78,100 TOTAL MSQ 7,263 08/04/93

	COST	COST/MSQ	COST/SF	TOTAL	TOTAL	COST/MSQ	COST/S.	TOTAL
DIRECT CONSTRUCTION COST								
BUILDING COST								
General Construction	$ 8,930,000	$ 1,229.52 msq	$ 114.34 sf	17.78%				
Process Piping Systems	$ 3,858,000	$ 531.19 msq	$ 49.40 sf	7.68%				
Piping Fire Protection	$ 341,000	$ 46.95 msq	$ 4.37 sf	0.68%				
Mechanical/HVAC	$ 5,512,000	$ 758.92 msq	$ 70.58 sf	10.97%				
Electrical	$ 1,088,000	$ 149.80 msq	$ 13.93 sf	2.17%				
Instrumentation	$ 330,000	$ 45.44 msq	$ 4.23 sf	0.66%				
Process Equipment	$12,783,900	$ 1,760.14 msq	$ 163.69 sf	25.45%				
ESTIMATED BUILDING COST					$32,842,900	$ 4,521.96 Msq	$ 420.54 sf	65.39%
ESTIMATED SITE DEVELOPMENT COST					$ 0	$ 0.00 Msq	$ 0.00 sf	0.00%
TOTAL CONSTRUCTION COST					$32,842,900	$ 4,521.96 Msq	$ 420.54 sf	65.39%
Inflation Allowance (0%)					$ 0	$ 0.00 Msq	$ 0.00 sf	0.00%
Contingency (25%)					$ 8,210,000	$ 1,130.39 Msq	$ 105.12 sf	16.35%
CONSTRUCTION BUDGET					$41,052,900	$ 5,652.35 Msq	$ 525.66 sf	81.73%
IN-DIRECT CONSTRUCTION COST								
Cyanmid Engineering	$ 300,000	$ 41.31 msq	$ 3.84 sf	0.60%				
el./Comp.Sys.	$ 96,000	$ 13.22 msq	$ 1.23 sf	0.19%				
ees/Permits	$ 3,827,500	$ 526.99 msq	$ 49.01 sf	7.62%				
Office Furnishings	$ 200,000	$ 27.54 msq	$ 2.56 sf	0.40%				
Capitalized Interest	$ 0	$ 0.00 msq	$ 0.00 sf	0.00%				
Capitalized Interest	$ 0	$ 0.00 msq	$ 0.00 sf	0.00%				
Land Cost	$ 0	$ 0.00 msq	$ 0.00 sf	0.00%				
Land Lease Cost	$ 0	$ 0.00 msq	$ 0.00 sf	0.00%				
ESTIMATED IN-DIRECT CONSTRUCTION COST TOTALS					$ 4,423,500	$ 609.05 Msq	$ 56.64 sf	8.81%
Contingency (25%)					$ 1,105,000	$ 0.00 Msq	$ 0.00 sf	2.20%
TOTAL IN-DIRECT CONSTRUCTION COST					$ 5,528,500	$ 0.00 Msq	$ 70.79 sf	11.01%
START-UP COST								
Telephone/Computer System	$ 136,175	$ 18.75 msq	$ 1.74 sf	0.27%				
Moving Expenses	$ 0	$ 0.00 msq	$ 0.00 sf	0.00%				
Decontamination	$ 25,200	$ 3.47 msq	$ 0.32 sf	0.05%				
Spare Parts	$ 862,000	$ 118.68 msq	$ 11.04 sf	1.72%				
Commissioning	$ 172,000	$ 23.68 msq	$ 2.20 sf	0.34%				
Validation	$ 2,452,000	$ 337.60 msq	$ 31.40 sf	4.88%				
ESTIMATED START-UP CONSTRUCTION COST TOTALS					$ 3,647,375	$ 502.19 msq	$ 46.70 sf	7.26%
TOTAL CONSTRUCTION COST					$50,228,775	$ 6,915.71 msq	$ 643.13 sf	100%

214

LEDERLE - PRAXIS BIOLOGICALS
Project Cost Summary - Quality Control Lab & Vivarium
FLAD & ASSOCIATES/AFFILIATED ENGINEERS
PROJECT NO.: 92210-00

.L SQ FT 45,700 TOTAL MSQ 4,250 08/04/93

	COST	COST/MSQ	COST/SF	TOTAL	TOTAL	COST/MSQ	COST/SF	TOTAL
DIRECT CONSTRUCTION COST								
BUILDING COST								
General Construction	$ 4,666,000	$ 1,097.88 msq	$ 102.10 sf	22.53%				
Process Piping Systems	$ 1,447,000	$ 340.47 msq	$ 31.66 sf	6.99%				
Piping Fire Protection	$ 225,000	$ 52.94 msq	$ 4.92 sf	1.09%				
Mechanical/HVAC	$ 3,262,000	$ 767.53 msq	$ 71.38 sf	15.75%				
Electrical	$ 972,000	$ 228.71 msq	$ 21.27 sf	4.69%				
Instrumentation	$ 165,000	$ 38.82 msq	$ 3.61 sf	0.80%				
Process Equipment	$ 2,322,240	$ 546.41 msq	$ 50.81 sf	11.21%				
ESTIMATED BUILDING COST					$13,059,240	$ 3,072.76 Msq	$ 285.75 sf	63.06%
ESTIMATED SITE DEVELOPMENT COST					$ 0	$ 0.00 Msq	$ 0.00 sf	0.00%
TOTAL CONSTRUCTION COST					$13,059,240	$ 3,072.76 Msq	$ 285.75 sf	63.06%
Inflation Allowance (0%)					$ 0	$ 0.00 Msq	$ 0.00 sf	0.00%
Contingency (25%)					$ 3,264,000	$ 768.00 Msq	$ 71.42 sf	15.76%
CONSTRUCTION BUDGET					$16,323,240	$ 3,840.76 Msq	$ 357.17 sf	78.82%
IN-DIRECT CONSTRUCTION COST								
Cyanmid Engineering	$ 200,000	$ 47.06 msq	$ 4.38 sf	0.97%				
el./Comp.Sys.	$ 200,000	$ 47.06 msq	$ 4.38 sf	0.97%				
ees/Permits	$ 1,868,000	$ 439.53 msq	$ 40.88 sf	9.02%				
Office Furnishings	$ 258,000	$ 60.71 msq	$ 5.65 sf	1.25%				
Capitalized Interest	$ 0	$ 0.00 msq	$ 0.00 sf	0.00%				
Land Cost	$ 0	$ 0.00 msq	$ 0.00 sf	0.00%				
Land Lease Cost	$ 0	$ 0.00 msq	$ 0.00 sf	0.00%				
ESTIMATED IN-DIRECT CONSTRUCTION COST TOTALS					$ 2,526,000	$ 594.35 Msq	$ 55.27 sf	12.20%
Contingency (25%)					$ 631,000	$ 0.01 Msq	$ 0.00 sf	3.05%
TOTAL IN-DIRECT CONSTRUCTION COST					$ 3,157,000	$ 0.01 Msq	$ 69.08 sf	15.24%
START-UP COST								
Telephone/Computer System	$ 62,342	$ 14.67 msq	$ 1.36 sf	0.30%				
Moving Expenses	$ 0	$ 0.00 msq	$ 0.00 sf	0.00%				
Decontamination	$ 14,700	$ 3.46 msq	$ 0.32 sf	0.07%				
Spare Parts	$ 285,000	$ 67.06 msq	$ 6.24 sf	1.38%				
Commissioning/Start-Up	$ 86,000	$ 20.24 msq	$ 1.88 sf	0.42%				
Validation	$ 781,000	$ 183.76 msq	$ 17.09 sf	3.77%				
ESTIMATED START-UP CONSTRUCTION COST TOTALS					$ 1,229,042	$ 289.19 msq	$ 26.89 sf	5.93%
TOTAL CONSTRUCTION COST					$20,709,282	$ 4,872.77 msq	$ 453.16 sf	100%

20

LEDERLE - PRAXIS BIOLOGICALS
Project Cost Summary - Warehouse & Support
FLAD & ASSOCIATES/AFFILIATED ENGINEERS
PROJECT NO.: 92210-00

TL SQ FT 33,200 TOTAL MSQ 3,088 08/04/93

	COST	COST/MSQ	COST/SF	TOTAL	TOTAL	COST/MSQ	COST/SF	TOTAL
DIRECT CONSTRUCTION COST								
BUILDING COST								
General Construction	$ 3,346,000	$ 1,083.55 msq	$ 100.78 sf	44.32%				
Process Piping Systems	$ 166,000	$ 53.76 msq	$ 5.00 sf	2.20%				
Piping Fire Protection	$ 168,000	$ 54.40 msq	$ 5.06 sf	2.23%				
Mechanical/HVAC	$ 480,000	$ 155.44 msq	$ 14.46 sf	6.36%				
Electrical	$ 325,000	$ 105.25 msq	$ 9.79 sf	4.31%				
Instrumentation	$ 0	$ 0.00 msq	$ 0.00 sf	0.00%				
Process Equipment	$ 0	$ 0.00 msq	$ 0.00 sf	0.00%				
ESTIMATED BUILDING COST					$ 4,485,000	$ 1,452.40 Msq	$ 135.09 sf	59.41%
ESTIMATED SITE DEVELOPMENT COST					$ 0	$ 0.00 Msq	$ 0.00 sf	0.00%
TOTAL CONSTRUCTION COST					$ 4,485,000	$ 1,452.40 Msq	$ 135.09 sf	59.41%
Inflation Allowance (0%)					$ 0	$ 0.00 Msq	$ 0.00 sf	0.00%
Contingency (25%)					$ 1,121,000	$ 363.02 Msq	$ 33.77 sf	14.85%
CONSTRUCTION BUDGET					$ 5,606,000	$ 1,815.42 Msq	$ 168.86 sf	74.26%
IN-DIRECT CONSTRUCTION COST								
Cyanmid Engineering	$ 200,000	$ 64.77 msq	$ 6.02 sf	2.65%				
[illegible]el./Comp.Sys.	$ 50,000	$ 16.19 msq	$ 1.51 sf	0.66%				
[illegible]ees/Permits	$ 1,062,000	$ 343.91 msq	$ 31.99 sf	14.07%				
Office Furnishings	$ 140,000	$ 45.34 msq	$ 4.22 sf	1.85%				
Capitalized Interest	$ 0	$ 0.00 msq	$ 0.00 sf	0.00%				
Land Cost	$ 0	$ 0.00 msq	$ 0.00 sf	0.00%				
Land Lease Cost	$ 0	$ 0.00 msq	$ 0.00 sf	0.00%				
ESTIMATED IN-DIRECT CONSTRUCTION COST TOTALS					$ 1,452,000	$ 470.21 Msq	$ 43.73 sf	19.23%
Contingency (25%)					$ 363,000	$ 0.01 Msq	$ 0.00 sf	4.81%
TOTAL IN-DIRECT CONSTRUCTION COST					$ 1,815,000	$ 0.01 Msq	$ 54.67 sf	24.04%
START-UP COST								
Telephone/Computer System	$ 25,322	$ 8.20 msq	$ 0.76 sf	0.34%				
Moving Expenses	$ 0	$ 0.00 msq	$ 0.00 sf	0.00%				
Decontamination	$ 15,540	$ 5.03 msq	$ 0.47 sf	0.21%				
Spare Parts	$ 23,000	$ 7.45 msq	$ 0.69 sf	0.30%				
Commissioning	$ 9,000	$ 2.91 msq	$ 0.27 sf	0.12%				
Validation	$ 55,000	$ 17.81 msq	$ 1.66 sf	0.73%				
ESTIMATED START-UP CONSTRUCTION COST TOTALS					$ 127,862	$ 41.41 msq	$ 3.85 sf	1.69%
TOTAL CONSTRUCTION COST					$ 7,548,862	$ 2,444.58 msq	$ 227.38 sf	100%

7210

LEDERLE - PRAXIS BIOLOGICALS
Project Cost Summary - Central Utility Plant
FLAD & ASSOCIATES/AFFILIATED ENGINEERS
PROJECT NO.: 92210-00

L SQ FT 18,600 TOTAL MSQ 1,730 08/04/93

	COST	COST/MSQ	COST/SF	TOTAL	TOTAL	COST/MSQ	COST/SF	TOTAL
DIRECT CONSTRUCTION COST								
BUILDING COST								
General Construction	$ 1,643,000	$ 949.71 msq	$ 88.33 sf	15.67%				
Process Piping Systems	$ 286,000	$ 165.32 msq	$ 15.38 sf	2.73%				
Piping Fire Protection	$ 105,000	$ 60.69 msq	$ 5.65 sf	1.00%				
Mechanical/HVAC	$ 3,502,000	$ 2,024.28 msq	$ 188.28 sf	33.39%				
Electrical	$ 1,144,000	$ 661.27 msq	$ 61.51 sf	10.91%				
Instrumentation	$ 0	$ 0.00 msq	$ 0.00 sf	0.00%				
Process Equipment	$ 97,700	$ 56.47 msq	$ 5.25 sf	0.93%				
ESTIMATED BUILDING COST					$ 6,777,700	$ 3,917.74 Msq	$ 364.40 sf	64.63%
ESTIMATED SITE DEVELOPMENT COST					$ 0	$ 0.00 Msq	$ 0.00 sf	0.00%
TOTAL CONSTRUCTION COST					$ 6,777,700	$ 3,917.74 Msq	$ 364.40 sf	64.63%
Inflation Allowance (0%)					$ 0	$ 0.00 Msq	$ 0.00 sf	0.00%
Contingency (25%)					$ 1,694,000	$ 979.19 Msq	$ 91.08 sf	16.15%
CONSTRUCTION BUDGET					$ 8,471,700	$ 4,896.93 Msq	$ 455.48 sf	80.78%
IN-DIRECT CONSTRUCTION COST								
Cyanmid Engineering	$ 100,000	$ 57.80 msq	$ 5.38 sf	0.95%				
el./Comp.Sys.	$ 20,000	$ 11.56 msq	$ 1.08 sf	0.19%				
ees/Permits	$ 1,112,000	$ 642.77 msq	$ 59.78 sf	10.60%				
Office Furnishings	$ 54,000	$ 31.21 msq	$ 2.90 sf	0.51%				
Capitalized Interest	$ 0	$ 0.00 msq	$ 0.00 sf	0.00%				
Land Cost	$ 0	$ 0.00 msq	$ 0.00 sf	0.00%				
Land Lease Cost	$ 0	$ 0.00 msq	$ 0.00 sf	0.00%				
ESTIMATED IN-DIRECT CONSTRUCTION COST TOTALS					$ 1,286,000	$ 743.35 Msq	$ 69.14 sf	12.26%
Contingency (25%)					$ 321,000	$ 0.01 Msq	$ 0.00 sf	3.06%
TOTAL IN-DIRECT CONSTRUCTION COST					$ 1,607,000	$ 0.01 Msq	$ 86.40 sf	15.32%
START-UP COST								
Telephone/Computer System	$ 29,497	$ 17.05 msq	$ 1.59 sf	0.28%				
Moving Expenses	$ 0	$ 0.00 msq	$ 0.00 sf	0.00%				
Decontamination	$ 6,650	$ 3.84 msq	$ 0.36 sf	0.06%				
Spare Parts	$ 106,000	$ 61.27 msq	$ 5.70 sf	1.01%				
Commissioning	$ 9,000	$ 5.20 msq	$ 0.48 sf	0.09%				
Validation	$ 257,000	$ 148.55 msq	$ 13.82 sf	2.45%				
ESTIMATED START-UP CONSTRUCTION COST TOTALS					$ 408,147	$ 235.92 msq	$ 21.94 sf	3.89%
TOTAL CONSTRUCTION COST					$10,486,847	$ 6,061.76 msq	$ 563.81 sf	100%

LEDERLE - PRAXIS BIOLOGICALS
Project Cost Summary - Administrative Offices
FLAD & ASSOCIATES/AFFILIATED ENGINEERS
PROJECT NO.: 92210-00

GSF 19,700 TOTAL MSQ 1,832 08/04/93

	COST	COST/MSQ	COST/SF	TOTAL	TOTAL	COST/MSQ	COST/SF	TOTAL
DIRECT CONSTRUCTION COST								
BUILDING COST								
General Construction	$ 1,644,000	$ 897.38 msq	$ 83.45 sf	36.23%				
Process Piping Systems	$ 0	$ 0.00 msq	$ 0.00 sf	0.00%				
Piping Fire Protection	$ 142,000	$ 77.51 msq	$ 7.21 sf	3.13%				
Mechanical/HVAC	$ 366,000	$ 199.78 msq	$ 18.58 sf	8.07%				
Electrical	$ 197,000	$ 107.53 msq	$ 10.00 sf	4.34%				
Instrumentation	$ 0	$ 0.00 msq	$ 0.00 sf	0.00%				
Process Equipment	$ 0	$ 0.00 msq	$ 0.00 sf	0.00%				
ESTIMATED BUILDING COST					$ 2,349,000	$ 1,282.20 Msq	$ 119.24 sf	51.76%
ESTIMATED SITE DEVELOPMENT COST					$ 0	$ 0.00 Msq	$ 0.00 sf	0.00%
TOTAL CONSTRUCTION COST					$ 2,349,000	$ 1,282.20 Msq	$ 119.24 sf	51.76%
Inflation Allowance (0%)					$ 0	$ 0.00 Msq	$ 0.00 sf	0.00%
Contingency (25%)					$ 587,000	$ 320.41 Msq	$ 29.80 sf	12.94%
CONSTRUCTION BUDGET					$ 2,936,000	$ 1,602.61 Msq	$ 149.04 sf	64.70%
IN-DIRECT CONSTRUCTION COST								
Cyanmid Engineering	$ 100,000	$ 54.59 msq	$ 5.08 sf	2.20%				
el./Comp.Sys.	$ 150,000	$ 81.88 msq	$ 7.61 sf	3.31%				
ees/Permits	$ 562,000	$ 306.77 msq	$ 28.53 sf	12.38%				
Office Furnishings	$ 356,000	$ 194.32 msq	$ 18.07 sf	7.84%				
Capitalized Interest	$ 0	$ 0.00 msq	$ 0.00 sf	0.00%				
Land Cost	$ 0	$ 0.00 msq	$ 0.00 sf	0.00%				
Land Lease Cost	$ 0	$ 0.00 msq	$ 0.00 sf	0.00%				
ESTIMATED IN-DIRECT CONSTRUCTION COST TOTALS					$ 1,168,000	$ 637.55 Msq	$ 59.29 sf	25.74%
Contingency (25%)					$ 292,000	$ 0.01 Msq	$ 0.00 sf	6.43%
TOTAL IN-DIRECT CONSTRUCTION COST					$ 1,460,000	$ 0.01 Msq	$ 74.11 sf	32.17%
START-UP COST								
Telephone/Computer System	$ 13,025	$ 7.11 msq	$ 0.66 sf	0.29%				
Moving Expenses	$ 0	$ 0.00 msq	$ 0.00 sf	0.00%				
Decontamination	$ 0	$ 0.00 msq	$ 0.00 sf	0.00%				
Spare Parts	$ 35,000	$ 19.10 msq	$ 1.78 sf	0.77%				
Commissioning	$ 9,000	$ 4.91 msq	$ 0.46 sf	0.20%				
Validation	$ 85,000	$ 46.40 msq	$ 4.31 sf	1.87%				
ESTIMATED START-UP CONSTRUCTION COST TOTALS					$ 142,025	$ 77.52 msq	$ 7.21 sf	3.13%
TOTAL CONSTRUCTION COST					$ 4,538,025	$ 2,477.09 msq	$ 230.36 sf	100%

LEDERLE - PRAXIS BIOLOGICALS
Project Cost Summary - Site Development
FLAD & ASSOCIATES/AFFILIATED ENGINEERS
PROJECT NO.: 92210-00

AL SQ FT 457,500 TOTAL MSQ 42,548 08/04/93

	COST	COST/MSQ	COST/SF	TOTAL	TOTAL	COST/MSQ	COST/SF	TOTAL
DIRECT CONSTRUCTION COST								
BUILDING COST								
General Construction	$ 0	$ 0.00 msq	$ 0.00 sf	0.00%				
Process Piping Systems	$ 0	$ 0.00 msq	$ 0.00 sf	0.00%				
Piping Fire Protection	$ 0	$ 0.00 msq	$ 0.00 sf	0.00%				
Mechanical/HVAC	$ 0	$ 0.00 msq	$ 0.00 sf	0.00%				
Electrical	$ 0	$ 0.00 msq	$ 0.00 sf	0.00%				
Instrumentation	$ 0	$ 0.00 msq	$ 0.00 sf	0.00%				
Process Equipment	$ 0	$ 0.00 msq	$ 0.00 sf	0.00%				
ESTIMATED BUILDING COST					$ 0	$ 0.00 Msq	$ 0.00 sf	0.00%
ESTIMATED SITE DEVELOPMENT COST					$ 3,474,000	$ 81.65 Msq	$ 7.59 sf	73.74%
TOTAL CONSTRUCTION COST					$ 3,474,000	$ 81.65 Msq	$ 7.59 sf	73.74%
Inflation Allowance (0%)					$ 0	$ 0.00 Msq	$ 0.00 sf	0.00%
Contingency (25%)					$ 868,000	$ 20.40 Msq	$ 1.90 sf	18.42%
CONSTRUCTION BUDGET					$ 4,342,000	$ 102.05 Msq	$ 9.49 sf	92.17%
IN-DIRECT CONSTRUCTION COST								
Site Survey	$ 14,000	$ 0.33 msq	$ 0.03 sf	0.30%				
nvironmental Assessment Fees	$ 115,000	$ 2.70 msq	$ 0.25 sf	2.44%				
oils Testing	$ 94,000	$ 2.21 msq	$ 0.21 sf	2.00%				
ESTIMATED IN-DIRECT CONSTRUCTION COST TOTALS					$ 223,000	$ 5.24 Msq	$ 0.49 sf	4.73%
Contingency (25%)					$ 55,000	$ 0.00 Msq	$ 0.00 sf	1.17%
TOTAL IN-DIRECT CONSTRUCTION COST					$ 278,000	$ 0.00 Msq	$ 0.61 sf	5.90%
START-UP COST								
Spare Parts	$ 27,000	$ 0.63 msq	$ 0.06 sf	0.57%				
Validation	$ 64,000	$ 1.50 msq	$ 0.14 sf	1.36%				
ESTIMATED START-UP CONSTRUCTION COST TOTALS					$ 91,000	$ 2.14 msq	$ 0.20 sf	1.93%
TOTAL CONSTRUCTION COST					$ 4,711,000	$ 110.72 msq	$ 10.30 sf	100%

U.S. Construction Schedule

Wednesday, August 4, 1993

Activities	Time Required
Advance Engin'g/ Approval Followup	5 Months
Construction Approvals	2 Months & 2 Months
Engineering	10 Months
Prospectus-Funding	3 Months
Construction	30 Months
Validation	12 Months

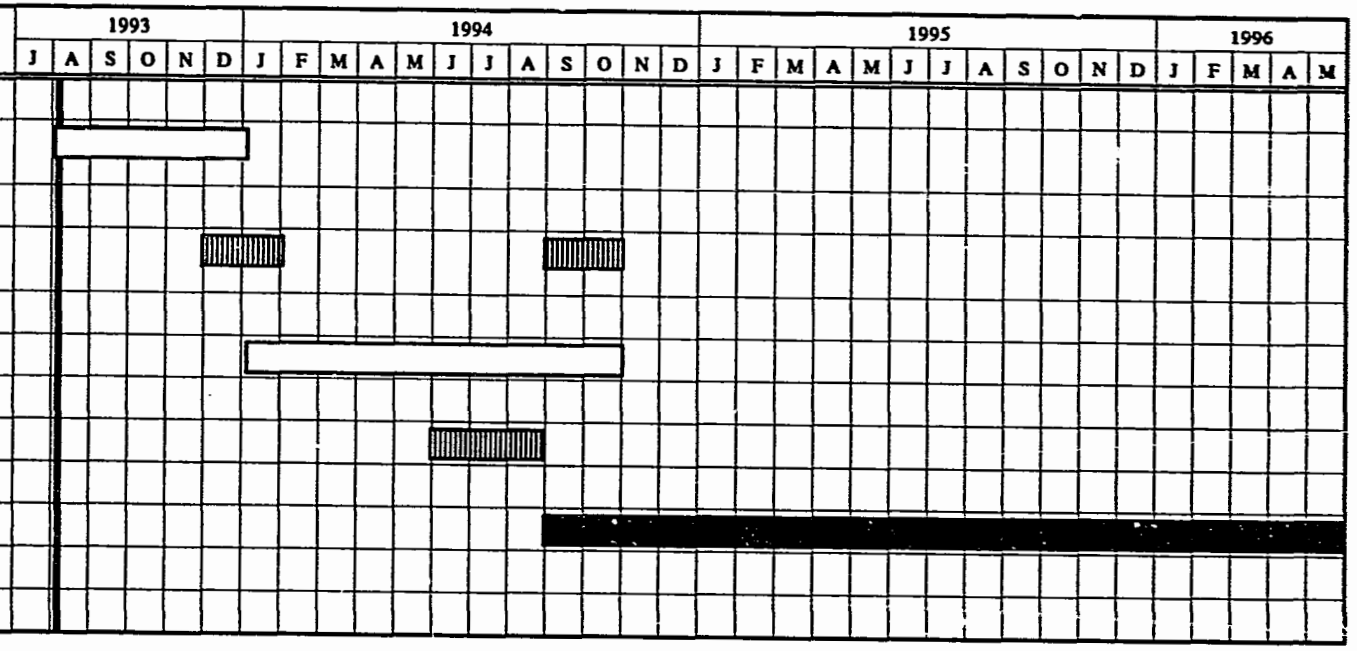

U.S. Construction Schedule

Wednesday, August 4, 1993

Activities	Time Required	1996							1997												1998												1999			
		J	J	A	S	O	N	D	J	F	M	A	M	J	J	A	S	O	N	D	J	F	M	A	M	J	J	A	S	O	N	D	J	F	M	A
Advance Engin'g/ Approval Followup	5 Months																																			
Construction Approvals	2 Months & 2 Months																																			
Engineering	10 Months																																			
Prospectus-Funding	3 Months																																			
Construction	30 Months																																			
Validation	12 Months																																			

2/1

3. Russian Cost Conversion

In the conversion of the US cost estimate to Russian the estimate was first converted to UK costs and then from UK to Russian. This method was adopted in order to use past and current John Brown Russian data which is directly comparably with UK costs.

The information used by JBEC in the preparation of this cost conversion has been taken from the following recent project and fixed price proposal:

H.D.P.E. Plant Expansion/Modernization - Budyennovsk, 1988

Synthetic Drugs Plant - Kstovo, 1992

Each element of the U.S.-based estimate was analyzed and the appropriate factors applied, the resultant factor is shown on the estimate summary sheet.

In building up the factors the general procedure adopted was to analyze each cost element and produce a typical percentage split of materials, labor and plant. These percentages were then adjusted in accordance with the data known of the required location and reflect any local customs and practices.

The following conversion assumptions give brief details of the main considerations determining the resultant factors used and they relate to the line numbers on the Estimate Conversion Summary.

Basis for Conversion

1. General Construction

The US Construction costs were assumed to be based upon building costs in North Carolina that reflect the US custom and practice. This can produce large cost savings when compared with constructing a building for the same requirements in the UK. Construction in Russia is less expensive than in the US as it is assumed that the buildings' substructure and superstructure will be constructed in accordance with the Russian custom and practice. It was assumed that the buildings will be constructed using precast concrete sections supplied by a local Russian factory and not structural steel as allowed in the US cost estimate. Materials associated with internal finishes and fittings, in order to comply with US specifications, were assumed to be sourced from outside of Russia at European prices.

Labor in Russia is less expensive than the US but productivity is poor when compared with the UK/US. More supervision of the labor force is required to maintain any reasonable productivity and acceptable quality.

For the building proposed which has no especially heavy loads and assuming pad foundations JBEC confirms the recommended bearing pressure of 225 kN/m^2. Some differential settlement should be expected but the building can be designed to allow for this.
When the site plan and building sizes are finalized JBEC recommends a further detail check of the soil conditions by an independent soil mechanics company - in view of the difficult conditions there.

The foundation construction method assumed within the estimate is deep pad foundations and ring beams. Within the General Construction costs the building foundations, frame or envelope are assumed to be constructed by a local Russian contractor using local materials. This information has been obtained from a local source in Roubles and has been converted at 1000 Roubles/$.

The remaining construction work - fittings, finishes etc. are assumed to be carried out by local and overseas specialists using western materials and contracts let under a Dollar contract.

Quantified Breakdown of General Construction Cost of Russian Estimate

General Construction Estimated Cost (in $000's)

a.	Russian building cost for foundations, frame and envelope (conversion rate used 1000 Roubles/$)	$	704
b.	Other construction costs - fittings, finishes etc.		
	(i) Materials, all imported	$	7,720
	(ii) Labor - local		2,813
	- overseas specialists		496
	TOTAL	$	11,733

2. Process Piping System

Process piping is more expensive as a high proportion of the cost is labour which will mostly be foreign sub-contract piping specialists to produce the required quality and to be validatable.

3. Piping/Fire Protection

General piping is overall less expensive as a high proportion of the cost is labour which is assumed will be local.

4. Mechanical/HVAC

Mechanical and HVAC equipment is generally sourced outside of the CIS and therefore more expensive. Russian equipment is not used as specifications are not always complied with and the equipment is unlikely to be validatable.

314

5. Electrical

Electrical costs are less as local labor can be utilized, but materials are generally sourced from outside of Russia but do not have an overriding effect.

6. Instrumentation

Instruments and associated equipment are as for Electrical above.

8. Site Development

The Site Development activities are labor intensive and therefore cheaper in Russia as local labor will be used.

9. Site Utilities

Site Utility costs are higher as a large proportion of the cost is materials which will be sourced outside of Russia as mentioned previously.

12. Inflation allowance

Inflation is not included in this estimate so that LPB can analyze this impact in the financial analysis in a consistent manner.

13. Contingency

The Contingency allowance use throughout has been kept the same as the US estimate at 25%.

10. Shipping/Transport

Shipping/transport costs are shown as 8% of material costs. This is an average percentage based upon the material costs including inflation. We have assumed that the majority of the materials will be sourced from Europe.

15. Cyanamid Engineering

Cyanamid Engineering costs have been increased to allow for US staff visits to Russia for meetings and other business. The increase allows for any salary uplifts, fares and accommodation.

16. Telephone/Computer Systems

Telephone and Computer Systems costs have been adjusted as for Electrical above.

17. Fees/Permits

Fees and Permit costs have been increased to allow for additional costs associated with working in Russia.

18. Office Furnishings

Office Furnishings are assumed to be sourced from outside of Russia at European prices.

19-21 Site Survey, Environmental Assessment Fees & Soil Testing.

The above costs have been increased to allow for the Client's US staff and Consultants to visit the CIS for meetings and to carry out work. The increase allows for expatriate salary uplifts, additional fees, fares and accommodation.

28. Decontamination

Decontamination costs have increased to allow for specialist contractors from outside of Russia to carry out the work.

30. Commissioning

The Commissioning costs have been increased to allow for US staff visits to the CIS to supervise the commissioning. The increase allows for expatriate salary uplifts, fares and accommodation.

31. Validation

The Validation costs have been increased to allow for US Validation staff visits during Commissioning. No allowance has been made for additional CIS Validation, the validation master plan will address two standards (Russian and US-FDA) and will ensure that no duplication of effort at IQ/OQ stages occur. Thus this will be as efficient as if the validation was for FDA only.

31

JOHN BROWN E&C
ESTIMATE SUMMARY

FILE NAME: ES15
PROJECT : KIR VACCINE PRODUCTION FACILITY
SCOPE : TIC. US FACTORED FOR CIS
EST CLASS: III (BUDGET)

CLIENT : PLAD & ASSOCIATES
LOCATION: C.I.S.
CURRENCY: DOLLARS

PROJ No : 6051
DATE : 9/ 8/93
REV No : 6

EST PREP BY : SJP
APPROVED :

		US COST BASIS								CIS ESTIMATED COST						
		MAKUP.	QC LAB & UTV.	W/HSE. & SPT.	CENT. UTIL.	ADMIN.	SITE DEV.	TOTAL		MAKUP.	QC LAB & UTV.	W/HSE. & SPT.	CENT. UTIL.	ADMIN.	SITE DEV.	TOTAL
	Building G.I.F.A. (m2) =	7,261	4,249	3,083	1,728	1,827	.			7,261	4,249	3,083	1,728	1,827	.	
	DESCRIPTION	$000's	$000's	$000's	$000's	$000's	$000's	$000's	CIS FAC.	$000's	$000's	$000's	$000's	$000's	$000's	$000's
DIRECT CONSTRUC. COSTS	1 GENERAL CONSTRUCTION	8,930	4,666	3,346	1,643	1,644	0	20,229	.58	5,179	2,706	1,941	953	954	0	11,732
	2 PROCESS PIPING SYST.	3,858	1,447	166	286	0	0	5,757	1.18	4,541	1,709	195	337	0	0	6,776
	3 PIPING/FIRE PROTECT.	341	225	168	105	142	0	981	.99	338	223	166	104	141	0	971
	4 MECHANICAL/HVAC	5,512	3,262	480	3,502	366	0	13,122	1.36	7,518	4,449	655	4,777	499	0	17,898
	5 ELECTRICAL	1,086	972	325	1,144	197	0	3,726	.99	1,077	962	322	1,133	195	0	3,689
	6 INSTRUMENTATION	330	165	0	0	0	0	495	1.05	345	172	0	0	0	0	517
	7 PROCESS EQUIPMENT	12,784	2,322	0	98	0	0	15,204	1.05	13,423	2,438	0	103	0	0	15,964
	8 SITE DEVELOPMENT	0	0	0	0	0	2,149	2,149	.81	0	0	0	0	0	1,749	1,749
	9 SITE UTILITIES	0	0	0	0	0	1,325	1,325	1.13	0	0	0	0	0	1,495	1,495
	10 OTHER SHIPPING/TRANS.	0	0	0	0	0	0	0	8%	1,971	737	153	464	94	72	3,501
	11 CONSTRUCTION SUBTOTAL	32,843	13,059	4,485	6,778	2,349	3,474	62,988		34,393	13,392	3,442	7,869	1,882	3,316	64,293
	12 INFLATION ALLOWANCE .0%	0	0	0	0	0	0	0	0%	0	0	0	0	0	0	0
	13 DESIGN CONTINGENCY 25.0%	8,211	3,265	1,121	1,694	587	869	15,747	25%	8,598	3,348	860	1,967	471	829	16,073
	14 TOTAL DIRECT CONSTRUCTION	41,054	16,324	5,606	8,472	2,936	4,343	78,735		42,991	16,739	4,302	9,836	2,353	4,145	80,366
INDIRECT COSTS	15 CYANAMID ENGINEERING	300	200	200	100	100	0	900	1.05	314	209	209	105	105	0	941
	16 TEL./COMP.SYST.	96	200	50	20	150	0	516	1.08	103	216	54	22	162	0	556
	17 FEES/PERMITS	3,828	1,868	1,062	1,112	562	0	8,432	1.05	4,000	1,952	1,110	1,162	587	0	8,811
	18 OFFICE FURNISHINGS	200	258	140	54	356	0	1,008	1.13	227	293	159	61	404	0	1,143
	19 SITE SURVEY	0	0	0	0	0	14	14	1.50	0	0	0	0	0	21	21
	20 ENVIRONMENT.ASSMT.FEES	0	0	0	0	0	115	115	1.10	0	0	0	0	0	127	127
	21 SOIL TESTING	0	0	0	0	0	94	94	1.50	0	0	0	0	0	141	141
	22 INDIRECT COSTS SUBTOTAL	4,424	2,526	1,452	1,286	1,168	223	11,079		4,644	2,669	1,531	1,349	1,257	289	11,739
	23 INFLATION ALLOWANCE .0%	0	0	0	0	0	0	0	0%	0	0	0	0	0	0	0
	24 CONTINGENCY 25.0%	1,106	632	363	322	292	56	2,770	25%	1,161	667	383	337	314	72	2,935
	25 TOTAL INDIRECTS	5,529	3,158	1,815	1,608	1,460	279	13,848		5,804	3,337	1,914	1,687	1,571	361	14,674
START UP COSTS	26 TELE./COMP. SYST.	136	62	25	29	13	0	265	1.08	147	67	27	32	14	0	287
	27 MOVING EXPENSES	0	0	0	0	0	0	0		0	0	0	0	0	0	0
	28 DECONTAMINATION	25	15	16	7	0	0	62	1.22	31	18	19	8	0	0	76
	29 SPARE PARTS	862	285	23	106	35	27	1,338	1.10	950	314	25	117	39	30	1,475
	30 COMMISSIONING	172	86	9	9	9	0	285	1.43	245	123	13	13	13	0	406
	31 VALIDATION	2,452	781	55	257	85	64	3,694	1.14	2,795	890	63	293	97	73	4,211
	32 START UP COSTS SUBTOTAL	3,547	1,229	128	408	142	91	5,645		4,168	1,412	147	463	162	103	6,455
	33 INFLATION ALLOWANCE .0%	0	0	0	0	0	0	0	0%	0	0	0	0	0	0	0
	34 CONTINGENCY 25.0%	912	307	32	102	36	23	1,411	25%	1,042	353	37	116	41	26	1,614
	35 TOTAL START UP COST	4,559	1,536	159	510	178	114	7,056		5,210	1,765	184	578	203	128	8,069
	36 TOTAL CONSTRUCTION COST	51,142	21,018	7,581	10,590	4,574	4,735	99,639	1.03	54,006	21,841	6,400	12,101	4,127	4,634	103,109

318

Russian Construction Schedule

Wednesday, August 4, 1993

Activities	Time Required
Advance Engin'g/ Approval Followup	5 Months & 3 Months
Construction Approvals	5 Months & 3 Months
Engineering-Primary	10 Months
Engineering-Followup	6 Months
Prospectus-Funding	3 Months
Procure/Manufacture/ Deliver	17 Months
Construction	30 Months
Validation	12 Months
Manufacturing License Approval	6 Months

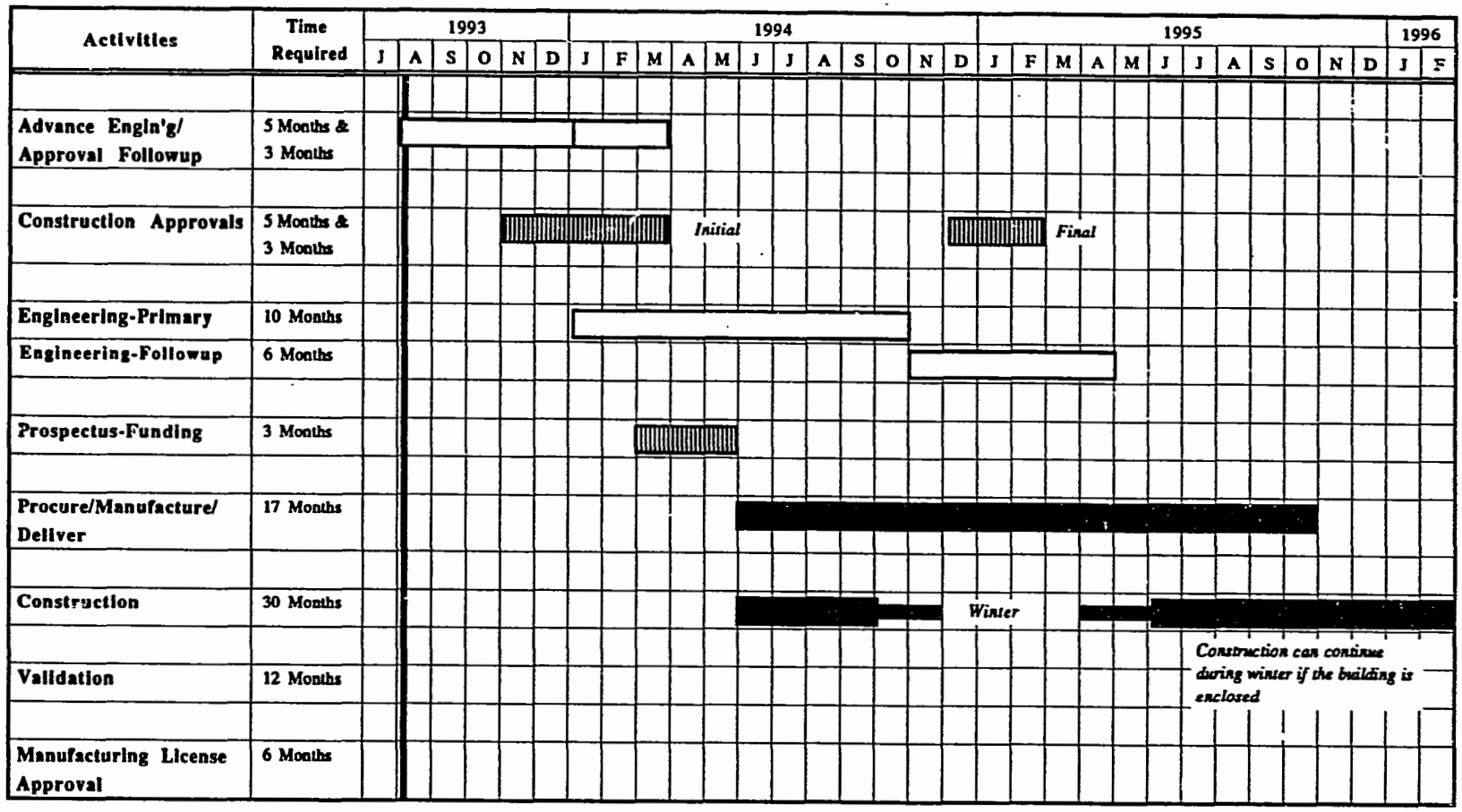

219

Russian Construction Schedule

Wednesday, August 4, 1993

Activities	Time Required	1996										1997												1998					
		M	A	M	J	J	A	S	O	N	D	J	F	M	A	M	J	J	A	S	O	N	D	J	F	M	A	M	J
Advance Engin'g/ Approval Followup	5 Months & 3 Months																												
Construction Approvals	5 Months & 3 Months																												
Engineering-Primary	10 Months																												
Engineering-Followup	6 Months																												
Prospectus-Funding	3 Months																												
Procure/Manufacture/ Deliver	17 Months																												
Construction	30 Months																												
Validation	12 Months																												
Manufacturing License Approval	6 Months																												

Construction Cash Flow Estimate Analysis
Based on Rates for Construction in Russia as modified by JBEC

Item	Notes	1993	1994	1995	1996	1997	1998	Total
Direct Construction Costs								
1. General Construction		$0	$587	$2,933	$4,693	$3,520	$0	$11,733
2. Process Piping Systems		$0	$339	$1,694	$2,710	$2,033	$0	$6,776
3. Piping, Fire Protection		$0	$49	$243	$388	$291	$0	$971
4. Mechanical/HVAC		$0	$895	$4,475	$7,159	$5,369	$0	$17,898
5. Electrical		$0	$184	$922	$1,476	$1,107	$0	$3,689
6. Instrumentation		$0	$26	$129	$207	$155	$0	$517
7. Process Equipment		$0	$0	$0	$0	$15,964	$0	$15,964
8. Site Development		$0	$1,574	$175	$0	$0	$0	$1,749
9. Site Utilities		$0	$1,346	$150	$0	$0	$0	$1,495
10. Other Shipping		$0	$350	$1,050	$1,400	$700	$0	$3,501
11. Construction Subtotal	Sum of 1 - 10	$0	$5,349	$11,771	$18,034	$29,139	$0	$64,293
12. Inflation Allowance	0% per year	$0	$0	$0	$0	$0	$0	$0
13. Design Contingency	25% of 11	$0	$1,337	$2,943	$4,509	$7,285	$0	$16,073
14. Total Direct Construction	Sum of 11 - 13	$0	$6,686	$14,713	$22,543	$36,424	$0	$80,366
Indirect Construction Costs								
15. Cyanamid Engineering		$235	$329	$235	$94	$47	$0	$941
16. Telephone/Comp. Sys.		$0	$0	$0	$0	$556	$0	$556
17. Fees/Permits		$1,322	$3,965	$2,203	$881	$441	$0	$8,811
18. Office Furnishings		$0	$0	$0	$0	$1,143	$0	$1,143
19. Site Survey		$21	$0	$0	$0	$0	$0	$21
20. Environmtl. Assmt. Fees		$127	$0	$0	$0	$0	$0	$127
21. Soil Testing		$141	$0	$0	$0	$0	$0	$141
22. Indirect Cost Subtotal	Sum of 15 - 21	$1,846	$4,294	$2,438	$975	$2,187	$0	$11,740
23. Inflation Allowance	0% per year	$0	$0	$0	$0	$0	$0	$0
24. Contingency	25% of 22	$461	$1,074	$610	$244	$547	$0	$2,935
25. Total Indirect	Sum of 22 - 24	$2,307	$5,368	$3,048	$1,219	$2,733	$0	$14,675
Start-Up Costs								
26. Telephone/Comp. Sys.		$0	$0	$0	$0	$287	$0	$287
27. Moving Expenses		$0	$0	$0	$0	$0	$0	$0
28. Decontamination		$0	$0	$0	$0	$76	$0	$76
29. Spare Parts		$0	$0	$0	$0	$1,475	$0	$1,475
30. Commissioning		$0	$0	$0	$0	$406	$0	$406
31. Validation		$0	$0	$0	$842	$3,369	$0	$4,211
32. Subtotal Start-Up	Sum of 26 - 31	$0	$0	$0	$842	$5,613	$0	$6,455
33. Inflation Allowance	0% per year	$0	$0	$0	$0	$0	$0	$0
34. Contingency	25% of Ln. 32	$0	$0	$0	$211	$1,403	$0	$1,614
35. Total Start-Up	Sum of 32 - 34	$0	$0	$0	$1,053	$7,016	$0	$8,069
Construction Total		$2,307	$12,054	$17,761	$24,814	$46,174	$0	$103,110

32

4. Summary

Cost Estimate

Given the assumptions used for this study, the construction cost estimate for the proposed facility in June 1993 currency is virtually the same whether it would be built in the US versus Russia. The estimate is approximately $100 million for the facility.

The high estimate for construction of the facility in Russia may be surprising to those who are familiar with the low cost of labor and some materials in Russia. For example, an article published in Handscomb/Means Report, February-March 1993, Page 2, identifies the cost of a shell office building in Russia at $750 per square meter ($70 per square foot) and $325 per square meter ($30 per square foot) for a basic facoty facility shell. These compare with estimated costs ranging from $1608 per square meter ($149 per square foot) for the office building in this study to $5655 per square meter ($525 per square foot) for the manufacturing building. The cost estimates in this study, of course, are not just for shell construction, but include finishes, equipment, furnishings, sitework, etc.

The Hanscomb/Means Report figures were given in January 1993 when one $US was quoted at 590 Russian roubles versus June 1993 when one $US was quoted at approximately 1000 Russian roubles. This is indicative of current inflationary extremes in Russia. Economics and extreme political uncertaintly have increased the cost of construction just like most other costs in Russia.

More to the root of the cost differential, however, is the nature of this particular facility. The major cost differences between a typical factory and the proposed vaccine production and support facilities include cleanroom construction in over 11,000 square feet of area, HEPA filtering, arilocks, six walk-in freezers, eleven walk-in chillrooms and five incubators, process equipment and piping, and specialty construction for animal breeding and testing. One of the critical drivers affecting the cost of the facility in Russia is the assumption that this facility should be built to meet US GMP standards.

In meeting these standards, it was necessary to assume that the local labor quality level would be unfamiliar with the requirements, therefore imported supervision and added time and cost for rework of uneven finishes or for installation of unfamiliar materials, etc. would be needed.

Schedule

Both the US and Russian versions of the construction schedule shown in this section indicate the potential for construction completion by early 1997 and the validation complete by fall of 1997. Although both schedules are optimistic in terms of the ability to overlap approvals and to avoid any delays, the Russian version is more optimistic in a less predictable environment.

For example, in the Russian schedule, an extended period of "Advance Engineering" actually continues for longer than the original five months shown to develop the original submittal. The reason for this is the interactive manner in which the various Russian agencies typically become involved. They may request that other projects be undertaken in exchange for approval of the plan as approved or modified. The owner may or may not elect to continue the ensuing "Engineering" work concurrent with this period of approval deliberation. This schedule shows the optimistic view of proceeding concurrently.

The schedule also assumes the same total period of time that would be required in the US for actual construction, whereas the probability of necessary rework, additional training, etc. is likely to extend this period. It also assumes only a single four month winter hiatus, which is probably optimistic in this climate.

A more likely estimate for completion of construction is spring of 1998. More conservatively, the construction could take five to ten years depending on the types of approval and political issues that confront the venture.

323

D. Facilities and Engineering Risk Assessment

The risk assessment in this section was generated as a compilation of the key facility and engineering issues that may affect a US vaccine producer in choosing to move ahead with this type of project. The assessment covers the areas of study that are considered in Sections IV, V, and VI of this report.

Overall, most facilities and engineering issues seem to be resolvable if investors are not expecting short-term return on their investment. Many of the evolving political and economic concerns affecting the business as a whole, e.g., taxation, land ownership, labor rates, etc., also affect the facilities areas. Although this type of building project in Russia is shown to require approximately the same total investment and time to complete as a counterpart facility in the US, it is far more likely to take many years and far more dollars because of political and economic uncertainties.

More specific comments are made on the following pages.

-24

Issue	Risk Assess-ment	Potential Impact	Rationale
Economy			
Local Construction Cost Increases	High	Moderate	As individual construction groups struggle to develop self--sufficiency and as demand increases, the cost of constructing such a facility is likely to increase. Alternative methods of construction may become relatively more desirable (other than precast concrete and other than local labor). The cost will be higher.
Cost Increase Due to Inflation	High	Moderate	NIS economies will likely gain more independence relative to other developed nations. Construction and operating costs will increase. On the other hand, local construction costs are currently low relative to the US and Europe.
Cost Increase Due to Political Instability	High	High	New Russian businesses as well as foreign joint venture arrangements may be affected by changing regulations regarding land holdings, taxation, etc.
Time			
Construction Delays Due to Need for High Quality	High	Moderate	Due to the need to insist on high quality construction to meet US GMP's, additional time will be required to learn and to rework any problem construction. Imported supervision is recommended. Flexibility in investment and product introduction periods may be required.
Construction Delays Due to Weather	High	Low	Relative to construction in the mid-U.S. states, severe Russian winter weather can delay construction as much as four months per year during the first year or two.
Construction Delays Due to Changing Regulations	Moderate	Unknown	New environmental regulations are pending. Obtaining local construction approval may involve negotiating to provide some types of service (utility or other) to the local community. Other regulations and responsible agencies are changing.
Property Rights and Liabilities			
Inheriting Liabilities	Unknown	Unknown	As described in the environmental report in Section 5, some of the concerns relative to the evolving property ownership laws in this country have to do with liability. The "state" previously owned the land which was used by the Institute. It is unclear in Russia as to who will be liable for any potential environmental issues.

225

Issue	Risk Assess-ment	Potential Impact	Rationale
Site Planning			
Need for Non-Standard Foundation Systems	High	Moderate	Initial soils reports indicate poor clay soils with high water retention and low bearing capacity. Further study may indicate a need for dewatering systems, and non-standard foundations.
Impact of Adjacent Uses -Institute of Immunology	Low	Low	The location upwind of this site could cause some air intake concerns. No specific problems are obvious at this time.
Impact of Adjacent Uses -Vodka Bottling Plant	High	Moderate	Considerable truck traffic on this surrounding site and roadway may cause dust concerns as well as road safety concerns.
Impact of Adjacent Uses -Unknown Future Joint Venture	Unknown	Unknown	Similar to the Vodka Bottling Plant, there was a discussion of a potential joint venture for a meat packing plant. Potential exists for development of adjacent, incompatible uses. The Institute of Immunology indicated that this would not happen.
Potential Air Entrainment Concerns	Low	Unknown	The prevailing winds are southwesterly at this site. During subsequent design phases, careful attention should be paid to avoiding air intake from one building upwind from air exhaust from another building.
Operational Issues			
Availability of Specialized Maintenance or Parts	Moderate	High	Since the equipment is proposed to be imported because it is not available locally, the maintenance skill and spare parts are not readily available. A larger spare parts budget should be planned and is included. Imported technical support may be necessary until the local support can be trained.
Operating Inefficiencies Based on Lack of Interstitial Space	Moderate	Moderate	The manufacturing and QC buildings assume a clear ceiling height of 4.8 meters (15.7 feet) and no interstitial mechanical floor. This decision was intended to save initial investment cost. Operating efficiency will be lower due to inability to get at the mechanical and piping controls without going into the manufacturing and QC areas, and the ensuing need to shutdown operations in order to accomplish this.

Issue	Risk Assess-ment	Potential Impact	Rationale
Energy/Utility Supply			
Problems with main Reliability	Low	Low	The site is fed with 110 kv electrical service direct feed from substation, buried medium pressure natural gas line and on-site water wells. Waste is pump directly to local treatment plant. These sources have a history of good reliability.
Concern for System Maintenance	Low	Low	On-site personnel are well-trained and seem to be very competent. Lack of investment capital for new equipment has been their limitation.
Changing Rate Structure	High	Moderate	Privatization and inflation could cause major changes in utility rates and therefore in operating costs.

321

Findings and Recommendations

The findings and recommendations of the facilities and engineering study include both a broader set of conclusions that relate to the overall Moscow Region, or Russia in general, as well as to a more site-specific set of conclusions. Assuming that the decision to construct a proposed facility in Russia is justified from a business standpoint, the broader set of findings and recommendations include the following:

- A GMP facility in Russia is likely to cost approximately the same as it would to build in the US, despite lower local labor and material costs of the items assumed in this study. The main causes for the off-setting higher cost are 1) additional labor required to ensure the quality necessary to meet US GMP (Good Manufacturing Practice) and Russian design standards for vaccine production, and 2) additional costs of importing supervisory or specialty labor and specialty materials, as assumed in the estimate.

- The majority of the materials for general shell construction and base utilities can likely be sourced locally. Finish materials, specialized equipment and cleanroom materials will probably need to be imported. Labor can be local and will require imported supervision to ensure the necessary quality to meet GMP. Specialty construction such as process piping arc welding will need to be imported. However, the decisions to buy materials and/or use labor either locally or imported should be made on a case-by-case basis.

- Due to startup timing, communication issues, cultural differences, training requirements, and additional validation issues, facility construction will likely take longer by at least one year than anticipated domestically.

- Clear definition of the rights and liabilities of property and facility ownership is not likely in the near future and obscures both costs and business implications. Among the concerns are the following: 1) The Russian government's decision to retain ownership of the property on which the site is located, and how this might affect current and future business decisions regarding the manner in which the facilities are used, 2) Other costs and responsibilities which might be incurred by this business venture in exchange for the right to construct this facility, 3) Liability for any potential environmental issues associated with past, current or future work on this site, 4) Inability to control future construction of

facilities which may have negative air quality, traffic, or other environmental impacts next to the facility, and 5) Ability to acquire vacant land for future expansion.

- According to ERM, numerous nuclear reactors and nuclear waste storage areas are reported throughout the Russian Federation and the Moscow region in particular. ERM advises that this can be an issue given the rather questionable safety record of the former Soviet nuclear program.

More site and detail specific findings and recommendations include the following:

- It appears that construction of a vaccine production facility at the proposed site at Lyubuchany, Russia, is viable from the standpoint of available space for the currently proposed facility, accessibility, and current or proposed amenities.

- At the Lyubuchany site, proximity to a rail station and to a major roadway system offers good accessibility, although the lack of access at the first intersection with Highway M-2 requires travel for an additional 8.5 km along rural roadways. Consideration might be given to requesting government construction of a closer intersection for access to M-2. Construction of the proposed new international airport at Domodedovo would also strongly enhance this accessibility.

- The selection of precast concrete construction may offer the most economical and time-efficient method of construction in the Moscow area at this point in time.

- Utility capacity for the new facility is adequate in the following systems: gas and sanitary sewer. New or upgraded capacity will be required for power, water, fire pump, steam, heating hot water, and compressed air. The overall telephone network is still lacking, although improvements are being made monthly. Consideration could be given to the installation of a link to satellite communications.

- Spare parts and experienced, specialized technicians for the equipment proposed are not likely to be available locally to ensure the smooth, continuing operations required in the US. A large spare parts inventory should be assumed in order to ensure continuing operations. For this estimate we assumed a cost of spare parts inventory at 5% of the

approximate original cost of equipment which may require parts over time and a cost of 15% of the approximate cost of validateable equipment. This spare parts inventory estimate is one and one half times larger than a comparable estimate made on a project in the US.

- No basements should be constructed at this site. There is a high water table during much of the year, which may require expensive, non-standard foundation systems and soil drainage systems.

- A summary of the proposed building estimates include the following:

Cost	$100 million
Gross Square Feet	193,000
Staff	200 people
Duration	At least four years for engineering and construction

A proposed site plan is shown on the following page.

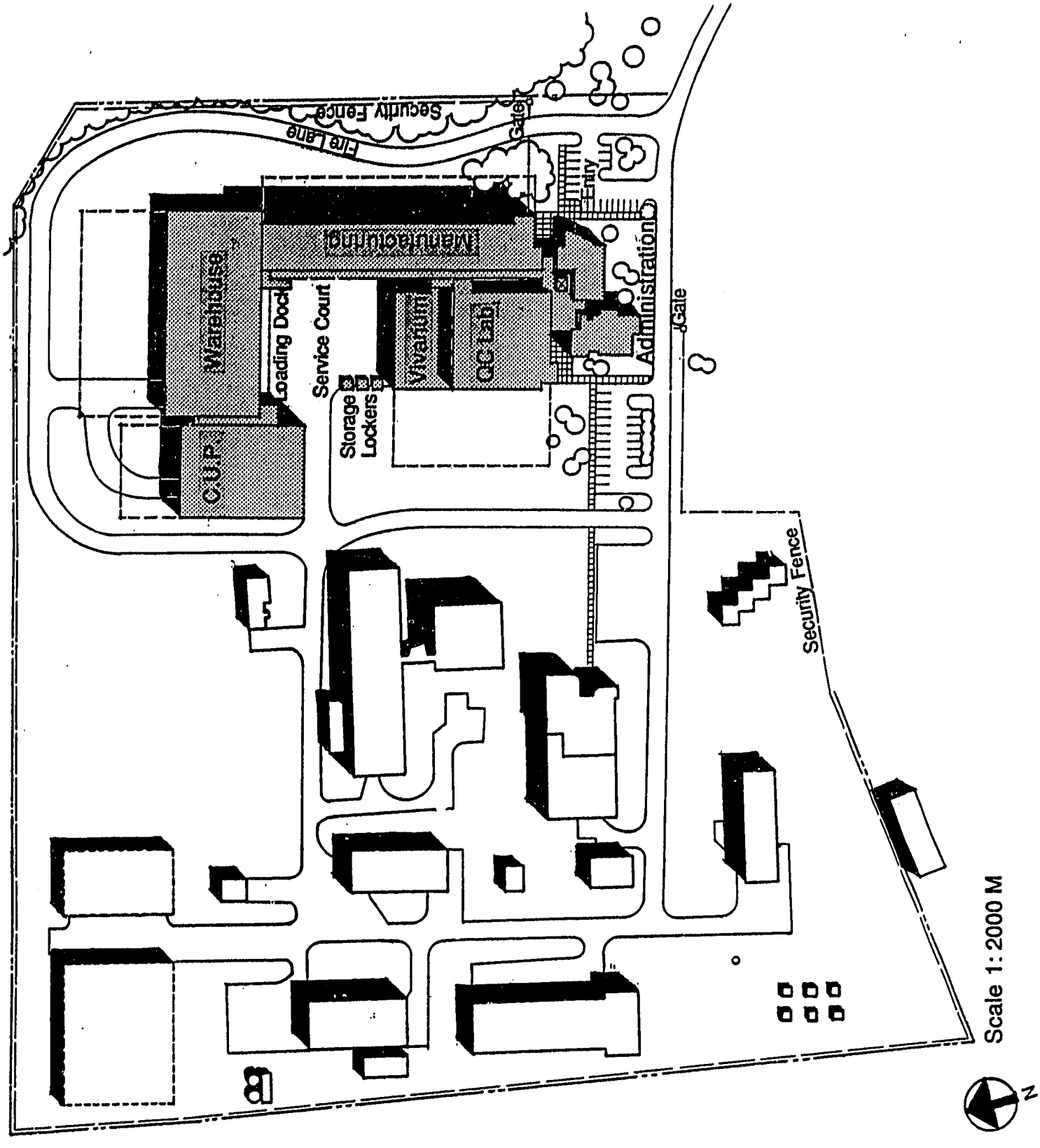

Proposed Site Plan
Lyubuchany Site
Moscow Region

331

Section VII

ECONOMIC AND FINANCIAL ANALYSES

VII. Economic/Financial Analyses

A. Overview

This section summarizes the CIS market for DTP and OPV vaccines and evaluates the economic viability of the construction and operation of a DTP and OPV manufacturing facility in Russia. Based on available market data, construction and operation cost estimates from the proposed facility and site assessment, income and cash flow statements for the US/Russian Vaccine Company were generated. The resulting financial analyses will help to provide a preliminary indication of the profit potential and base plan for the construction and operation of a vaccine facility in the CIS.

B. CIS Vaccine Market for DTP and OPV

The following tables provide the market data:

- Population of CIS: Total 1992 population of the CIS.
- Growth in Birth Rates per Year: The rate of births based on 1990 data and assumes that growth will remain constant over the next fifteen years.
- Total Births per Year: Projected total births based on the birth rate times the number of births per year for both urban and rural populations.
- DTP and OPV Vaccination Coverage: Projected immunization rates based on 1989 data. Although current rates are lower, it is anticipated that rates will steadily improve to at least 1989 levels as a result of increased availability of vaccines by both Russian and foreign suppliers.
- Total CIS Vaccine Market for DTP and OPV: The total births per year times the vaccination coverage.
- Projected DTP and OPV Market Share: The percent share of the total vaccine market that this US/Russian Vaccine Company will have. This is determined by the number of Russian and foreign manufacturers who will supply DTP and OPV vaccines to the CIS. It is assumed that there are two suppliers of polio vaccine and three suppliers of DTP vaccine for the CIS and this US/Russian Vaccine Company is one.
- Projected DTP and OPV Unit Sales: The market share that this US/Russian Vaccine Company will attain in the total CIS vaccine market.
- Total Vaccine Sales: The projected DTP and OPV unit sales times the selling price per unit.

Estimated Total Births in the Commonwealth of Indepedent States
1999-2008

COUNTRY	1992 Population (millions)*	K Births Total	% Growth in Total Birth Rate^									
			1999	2000	2001	2002	2003	2004	2005	2006	2007	2008
Russia	148.8	2,083	1.3%	1.3%	1.3%	1.3%	1.3%	1.3%	1.3%	1.3%	1.3%	1.3%
Ukraine	51.9	830	1.3%	1.3%	1.3%	1.3%	1.3%	1.3%	1.3%	1.3%	1.3%	1.3%
Uzbeckistan	21.1	675	3.4%	3.4%	3.4%	3.4%	3.4%	3.4%	3.4%	3.4%	3.4%	3.4%
Kazakhstan	17.0	408	2.2%	2.2%	2.2%	2.2%	2.2%	2.2%	2.2%	2.2%	2.2%	2.2%
Tajikistan	5.5	198	3.8%	3.8%	3.8%	3.8%	3.8%	3.8%	3.8%	3.8%	3.8%	3.8%
Azerbaijan	7.2	187	2.5%	2.5%	2.5%	2.5%	2.5%	2.5%	2.5%	2.5%	2.5%	2.5%
Belarussia	10.3	144	1.4%	1.4%	1.4%	1.4%	1.4%	1.4%	1.4%	1.4%	1.4%	1.4%
Kyrghzstan	4.5	126	2.9%	2.9%	2.9%	2.9%	2.9%	2.9%	2.9%	2.9%	2.9%	2.9%
Turkmenistan	3.8	129	3.4%	3.4%	3.4%	3.4%	3.4%	3.4%	3.4%	3.4%	3.4%	3.4%
Georgia	5.5	99	2.0%	2.0%	2.0%	2.0%	2.0%	2.0%	2.0%	2.0%	2.0%	2.0%
Armenia	3.5	84	2.4%	2.4%	2.4%	2.4%	2.4%	2.4%	2.4%	2.4%	2.4%	2.4%
Moldova	4.4	78	1.8%	1.8%	1.8%	1.8%	1.8%	1.8%	1.8%	1.8%	1.8%	1.8%
Total/Average	**283.5**	**5,043**										

COUNTRY	Estimated Total Number of Births per Year (K)									
	1999	2000	2001	2002	2003	2004	2005	2006	2007	2008
Russia	2,287	2,317	2,348	2,380	2,412	2,444	2,477	2,510	2,544	2,578
Ukraine	907	919	930	942	954	966	978	991	1,003	1,016
Uzbeckistan	851	880	909	940	971	1,004	1,038	1,072	1,108	1,146
Kazakhstan	474	484	495	506	517	528	539	551	563	575
Tajikistan	258	268	278	289	300	311	323	336	348	362
Azerbaijan	223	228	234	240	246	252	258	265	271	278
Belarussia	159	161	163	166	168	170	173	175	177	180
Kyrghzstan	154	158	163	168	173	178	183	188	193	199
Turkmenistan	163	169	175	180	187	193	200	206	213	221
Georgia	114	116	118	121	123	126	128	131	133	136
Armenia	99	102	104	106	109	112	114	117	120	123
Moldova	88	90	92	93	95	97	98	100	102	104
Total	**5,776**	**5,891**	**6,009**	**6,130**	**6,253**	**6,379**	**6,509**	**6,641**	**6,777**	**6,916**

* Kohan, J., Time Magazine, December 7, 1992, pg. 36-39.

^ CIS, US AID Health Profile, April 24, 1992.

DTP Vaccination Coverage

COUNTRY	Projected Vaccination Coverage (%)*									
	1999	2000	2001	2002	2003	2004	2005	2006	2007	2008
Russia	82.7%	82.7%	82.7%	82.7%	82.7%	82.7%	82.7%	82.7%	82.7%	82.7%
Ukraine	79.2%	79.2%	79.2%	79.2%	79.2%	79.2%	79.2%	79.2%	79.2%	79.2%
Uzbeckistan	57.5%	57.5%	57.5%	57.5%	57.5%	57.5%	57.5%	57.5%	57.5%	57.5%
Kazakhstan	84.8%	84.8%	84.8%	84.8%	84.8%	84.8%	84.8%	84.8%	84.8%	84.8%
Tajikistan	87.9%	87.9%	87.9%	87.9%	87.9%	87.9%	87.9%	87.9%	87.9%	87.9%
Azerbaijan	89.4%	89.4%	89.4%	89.4%	89.4%	89.4%	89.4%	89.4%	89.4%	89.4%
Belarussia	90.0%	90.0%	90.0%	90.0%	90.0%	90.0%	90.0%	90.0%	90.0%	90.0%
Kyrghzstan	61.6%	61.6%	61.6%	61.6%	61.6%	61.6%	61.6%	61.6%	61.6%	61.6%
Turkmenistan	78.4%	78.4%	78.4%	78.4%	78.4%	78.4%	78.4%	78.4%	78.4%	78.4%
Georgia	80.0%	80.0%	80.0%	80.0%	80.0%	80.0%	80.0%	80.0%	80.0%	80.0%
Armenia	88.0%	88.0%	88.0%	88.0%	88.0%	88.0%	88.0%	88.0%	88.0%	88.0%
Moldova	87.8%	87.8%	87.8%	87.8%	87.8%	87.8%	87.8%	87.8%	87.8%	87.8%
Average	**80.6%**	**80.6%**	**80.6%**	**80.6%**	**80.6%**	**80.6%**	**80.6%**	**80.6%**	**80.6%**	**80.6%**

Total CIS Market for DTP

COUNTRY	DTP Market based on 5 dose Regiman (doses)									
	1999	2000	2001	2002	2003	2004	2005	2006	2007	2008
Russia	9,455	9,582	9,710	9,840	9,972	10,106	10,241	10,379	10,518	10,659
Ukraine	3,592	3,638	3,684	3,731	3,778	3,826	3,875	3,924	3,974	4,024
Uzbeckistan	2,446	2,529	2,614	2,701	2,792	2,886	2,983	3,083	3,187	3,294
Kazakhstan	2,010	2,054	2,099	2,144	2,191	2,238	2,287	2,336	2,387	2,439
Tajikistan	1,133	1,176	1,222	1,268	1,317	1,368	1,420	1,475	1,531	1,590
Azerbaijan	995	1,020	1,045	1,071	1,098	1,125	1,154	1,182	1,212	1,242
Belarussia	715	725	735	745	755	766	776	787	798	809
Kyrghzstan	474	488	502	517	531	547	563	579	596	613
Turkmenistan	640	662	684	708	732	756	782	809	836	865
Georgia	455	464	473	483	492	502	512	523	533	544
Armenia	436	447	458	469	480	491	503	515	528	540
Moldova	388	395	402	409	416	424	431	439	447	454
Total	**22,740**	**23,179**	**23,627**	**24,086**	**24,555**	**25,036**	**25,528**	**26,031**	**26,546**	**27,073**

* CIS, US AID Health Profile,April 24, 1992.

DTP Market Share

COUNTRY	Projected Market Share (%) for US/Russian Vaccine Company									
	1999	2000	2001	2002	2003	2004	2005	2006	2007	2008
Russia	33.0%	33.0%	33.0%	33.0%	33.0%	33.0%	33.0%	33.0%	33.0%	33.0%
Ukraine	33.0%	33.0%	33.0%	33.0%	33.0%	33.0%	33.0%	33.0%	33.0%	33.0%
Uzbeckistan	50.0%	50.0%	50.0%	50.0%	50.0%	50.0%	50.0%	50.0%	50.0%	50.0%
Kazakhstan	50.0%	50.0%	50.0%	50.0%	50.0%	50.0%	50.0%	50.0%	50.0%	50.0%
Tajikistan	50.0%	50.0%	50.0%	50.0%	50.0%	50.0%	50.0%	50.0%	50.0%	50.0%
Azerbaijan	50.0%	50.0%	50.0%	50.0%	50.0%	50.0%	50.0%	50.0%	50.0%	50.0%
Belarussia	50.0%	50.0%	50.0%	50.0%	50.0%	50.0%	50.0%	50.0%	50.0%	50.0%
Kyrghzstan	50.0%	50.0%	50.0%	50.0%	50.0%	50.0%	50.0%	50.0%	50.0%	50.0%
Turkmenistan	50.0%	50.0%	50.0%	50.0%	50.0%	50.0%	50.0%	50.0%	50.0%	50.0%
Georgia	50.0%	50.0%	50.0%	50.0%	50.0%	50.0%	50.0%	50.0%	50.0%	50.0%
Armenia	50.0%	50.0%	50.0%	50.0%	50.0%	50.0%	50.0%	50.0%	50.0%	50.0%
Moldova	50.0%	50.0%	50.0%	50.0%	50.0%	50.0%	50.0%	50.0%	50.0%	50.0%
Average	**47.2%**	**47.2%**	**47.2%**	**47.2%**	**47.2%**	**47.2%**	**47.2%**	**47.2%**	**47.2%**	**47.2%**

DTP Unit Sales

COUNTRY	DTP Volumes for US/Russian Vaccine Company (doses)									
	1999	2000	2001	2002	2003	2004	2005	2006	2007	2008
Russia	3,120	3,162	3,204	3,247	3,291	3,335	3,380	3,425	3,471	3,517
Ukraine	1,185	1,200	1,216	1,231	1,247	1,263	1,279	1,295	1,311	1,328
Uzbeckistan	1,223	1,264	1,307	1,351	1,396	1,443	1,491	1,542	1,593	1,647
Kazakhstan	1,005	1,027	1,049	1,072	1,095	1,119	1,143	1,168	1,194	1,219
Tajikistan	566	588	611	634	659	684	710	737	766	795
Azerbaijan	497	510	523	536	549	563	577	591	606	621
Belarussia	357	362	367	372	378	383	388	394	399	405
Kyrghzstan	237	244	251	258	266	273	281	290	298	307
Turkmenistan	320	331	342	354	366	378	391	404	418	432
Georgia	227	232	237	241	246	251	256	261	266	272
Armenia	218	223	229	234	240	246	252	258	264	270
Moldova	194	198	201	205	208	212	216	219	223	227
Total	**9,152**	**9,342**	**9,536**	**9,736**	**9,940**	**10,149**	**10,364**	**10,584**	**10,809**	**11,041**

36

DTP Sales

COUNTRY	DTP Sales for US/Russian Vaccine Company									
	1999	2000	2001	2002	2003	2004	2005	2006	2007	2008
Russia	$1,560	$1,581	$1,602	$1,624	$1,645	$1,667	$1,690	$1,712	$1,735	$1,759
Ukraine	$593	$600	$608	$616	$623	$631	$639	$647	$656	$664
Uzbeckistan	$612	$632	$653	$675	$698	$722	$746	$771	$797	$823
Kazakhstan	$503	$514	$525	$536	$548	$560	$572	$584	$597	$610
Tajikistan	$283	$294	$305	$317	$329	$342	$355	$369	$383	$398
Azerbaijan	$249	$255	$261	$268	$274	$281	$288	$296	$303	$311
Belarussia	$179	$181	$184	$186	$189	$191	$194	$197	$200	$202
Kyrghzstan	$119	$122	$125	$129	$133	$137	$141	$145	$149	$153
Turkmenistan	$160	$165	$171	$177	$183	$189	$196	$202	$209	$216
Georgia	$114	$116	$118	$121	$123	$126	$128	$131	$133	$136
Armenia	$109	$112	$114	$117	$120	$123	$126	$129	$132	$135
Moldova	$97	$99	$101	$102	$104	$106	$108	$110	$112	$114
Total	**$4,576**	**$4,671**	**$4,768**	**$4,868**	**$4,970**	**$5,075**	**$5,182**	**$5,292**	**$5,405**	**$5,520**
Price/dose	**$0.50**	**$0.50**	**$0.50**	**$0.50**	**$0.50**	**$0.50**	**$0.50**	**$0.50**	**$0.50**	**$0.50**

337

OPV Vaccination Coverage

COUNTRY	Projected Vaccination Coverage (%)*									
	1999	2000	2001	2002	2003	2004	2005	2006	2007	2008
Russia	68.6%	68.6%	68.6%	68.6%	68.6%	68.6%	68.6%	68.6%	68.6%	68.6%
Ukraine	80.5%	80.5%	80.5%	80.5%	80.5%	80.5%	80.5%	80.5%	80.5%	80.5%
Uzbeckistan	61.2%	61.2%	61.2%	61.2%	61.2%	61.2%	61.2%	61.2%	61.2%	61.2%
Kazakhstan	85.6%	85.6%	85.6%	85.6%	85.6%	85.6%	85.6%	85.6%	85.6%	85.6%
Tajikistan	89.8%	89.8%	89.8%	89.8%	89.8%	89.8%	89.8%	89.8%	89.8%	89.8%
Azerbaijan	93.0%	93.0%	93.0%	93.0%	93.0%	93.0%	93.0%	93.0%	93.0%	93.0%
Belarussia	90.4%	90.4%	90.4%	90.4%	90.4%	90.4%	90.4%	90.4%	90.4%	90.4%
Kyrghzstan	72.0%	72.0%	72.0%	72.0%	72.0%	72.0%	72.0%	72.0%	72.0%	72.0%
Turkmenistan	83.7%	83.7%	83.7%	83.7%	83.7%	83.7%	83.7%	83.7%	83.7%	83.7%
Georgia	82.0%	82.0%	82.0%	82.0%	82.0%	82.0%	82.0%	82.0%	82.0%	82.0%
Armenia	95.5%	95.5%	95.5%	95.5%	95.5%	95.5%	95.5%	95.5%	95.5%	95.5%
Moldova	91.6%	91.6%	91.6%	91.6%	91.6%	91.6%	91.6%	91.6%	91.6%	91.6%
Average	**82.8%**	**82.8%**	**82.8%**	**82.8%**	**82.8%**	**82.8%**	**82.8%**	**82.8%**	**82.8%**	**82.8%**

Total CIS Market for OPV

COUNTRY	Total CIS Demand for OPV based on 4 dose Regiman (doses)									
	1999	2000	2001	2002	2003	2004	2005	2006	2007	2008
Russia	6,275	6,359	6,444	6,530	6,618	6,706	6,796	6,887	6,980	7,073
Ukraine	2,921	2,958	2,996	3,034	3,072	3,111	3,151	3,191	3,231	3,272
Uzbeckistan	2,083	2,153	2,225	2,300	2,378	2,457	2,540	2,625	2,714	2,805
Kazakhstan	1,624	1,659	1,695	1,732	1,769	1,807	1,847	1,887	1,928	1,970
Tajikistan	926	961	998	1,037	1,076	1,118	1,161	1,205	1,252	1,300
Azerbaijan	828	848	870	891	914	937	960	984	1,009	1,034
Belarussia	574	582	590	599	607	615	624	633	641	650
Kyrghzstan	443	456	469	483	497	511	526	541	557	573
Turkmenistan	547	565	584	604	625	646	668	691	714	739
Georgia	373	380	388	396	404	412	420	428	437	446
Armenia	379	388	397	407	417	427	437	447	458	469
Moldova	324	330	336	342	348	354	360	366	373	379
Total	**17,296**	**17,640**	**17,993**	**18,354**	**18,723**	**19,102**	**19,489**	**19,886**	**20,293**	**20,709**

* CIS, US AID Health Profile, April 24, 1992.

328

OPV Market Share

COUNTRY	Projected Market Share (%) for US/Russian Vaccine Company									
	1999	2000	2001	2002	2003	2004	2005	2006	2007	2008
Russia	50.0%	50.0%	50.0%	50.0%	50.0%	50.0%	50.0%	50.0%	50.0%	50.0%
Ukraine	50.0%	50.0%	50.0%	50.0%	50.0%	50.0%	50.0%	50.0%	50.0%	50.0%
Uzbeckistan	50.0%	50.0%	50.0%	50.0%	50.0%	50.0%	50.0%	50.0%	50.0%	50.0%
Kazakhstan	50.0%	50.0%	50.0%	50.0%	50.0%	50.0%	50.0%	50.0%	50.0%	50.0%
Tajikistan	50.0%	50.0%	50.0%	50.0%	50.0%	50.0%	50.0%	50.0%	50.0%	50.0%
Azerbaijan	50.0%	50.0%	50.0%	50.0%	50.0%	50.0%	50.0%	50.0%	50.0%	50.0%
Belarussia	50.0%	50.0%	50.0%	50.0%	50.0%	50.0%	50.0%	50.0%	50.0%	50.0%
Kyrghzstan	50.0%	50.0%	50.0%	50.0%	50.0%	50.0%	50.0%	50.0%	50.0%	50.0%
Turkmenistan	50.0%	50.0%	50.0%	50.0%	50.0%	50.0%	50.0%	50.0%	50.0%	50.0%
Georgia	50.0%	50.0%	50.0%	50.0%	50.0%	50.0%	50.0%	50.0%	50.0%	50.0%
Armenia	50.0%	50.0%	50.0%	50.0%	50.0%	50.0%	50.0%	50.0%	50.0%	50.0%
Moldova	50.0%	50.0%	50.0%	50.0%	50.0%	50.0%	50.0%	50.0%	50.0%	50.0%
Average	**50.0%**	**50.0%**	**50.0%**	**50.0%**	**50.0%**	**50.0%**	**50.0%**	**50.0%**	**50.0%**	**50.0%**

OPV Unit Sales

COUNTRY	OPV Volumes for US/Russian Vaccine Company (doses)									
	1999	2000	2001	2002	2003	2004	2005	2006	2007	2008
Russia	3,137	3,179	3,222	3,265	3,309	3,353	3,398	3,444	3,490	3,537
Ukraine	1,460	1,479	1,498	1,517	1,536	1,556	1,575	1,595	1,616	1,636
Uzbeckistan	1,042	1,077	1,113	1,150	1,189	1,229	1,270	1,313	1,357	1,402
Kazakhstan	812	829	847	866	885	904	923	943	964	985
Tajikistan	463	481	499	518	538	559	580	603	626	650
Azerbaijan	414	424	435	446	457	468	480	492	504	517
Belarussia	287	291	295	299	303	308	312	316	321	325
Kyrghzstan	222	228	235	241	248	256	263	271	279	287
Turkmenistan	273	283	292	302	312	323	334	345	357	369
Georgia	187	190	194	198	202	206	210	214	219	223
Armenia	189	194	199	203	208	213	218	224	229	234
Moldova	162	165	168	171	174	177	180	183	186	190
Total	**8,648**	**8,820**	**8,996**	**9,177**	**9,362**	**9,551**	**9,745**	**9,943**	**10,146**	**10,355**

OPV Sales

COUNTRY	OPV Sales for US/Russian Vaccine Company									
	1999	2000	2001	2002	2003	2004	2005	2006	2007	2008
Russia	$1,569	$1,590	$1,611	$1,633	$1,654	$1,677	$1,699	$1,722	$1,745	$1,768
Ukraine	$730	$739	$749	$758	$768	$778	$788	$798	$808	$818
Uzbeckistan	$521	$538	$556	$575	$594	$614	$635	$656	$678	$701
Kazakhstan	$406	$415	$424	$433	$442	$452	$462	$472	$482	$492
Tajikistan	$231	$240	$250	$259	$269	$279	$290	$301	$313	$325
Azerbaijan	$207	$212	$217	$223	$228	$234	$240	$246	$252	$258
Belarussia	$144	$146	$148	$150	$152	$154	$156	$158	$160	$163
Kyrghzstan	$111	$114	$117	$121	$124	$128	$132	$135	$139	$143
Turkmenistan	$137	$141	$146	$151	$156	$162	$167	$173	$179	$185
Georgia	$93	$95	$97	$99	$101	$103	$105	$107	$109	$111
Armenia	$95	$97	$99	$102	$104	$107	$109	$112	$114	$117
Moldova	$81	$82	$84	$85	$87	$88	$90	$92	$93	$95
Total	**$4,324**	**$4,410**	**$4,498**	**$4,588**	**$4,681**	**$4,775**	**$4,872**	**$4,972**	**$5,073**	**$5,177**
Price/Dose	**$0.50**	**$0.50**	**$0.50**	**$0.50**	**$0.50**	**$0.50**	**$0.50**	**$0.50**	**$0.50**	**$0.50**

C. Definitions

The following definitions of financial terms are provided to aid in the understanding and evaluation of this US/Russian Vaccine Company's income statement.

1. Sales

Gross sales are defined as the DTP and OPV unit sales times the unit selling price.

Transportation and Freight are the costs associated with the transfer of products to the customer. These include the packing and shipment of vaccines under proper temperature conditions from the manufacturer to the end user and is also the cost associated with the cold chain distribution system.

2. Expenses

Manufacturing Cost of Sales consist of the costs of materials, labor, services and overheads incurred with the manufacture of a product or product line. Variable costs tend to fluctuate in total in proportion to changes in volume or activity but tend to remain uniform on a per-unit basis. These costs are generally materials and labor. Period costs tend not to change in total and thus to become smaller on a per-unit basis as volume increases and likewise, if a product line is deleted these costs would continue since other product lines are involved and operation cannot be shut down. These include utility rates, depreciation, and miscellaneous overheads.

Depreciation is the allocation of the costs of plant and equipment over its useful life.

Commercial Expenses are expenses related to the sale of product such as warehousing, customer service, field force selling, product management and Phase IV Studies (post market product surveillance). Other commercial expenses included are advertising and sales promotion expenses such as publications, space and time in various media, direct mail campaigns, samples and other promotional activities.

Administrative Expenses consist of general expenses such as Executive Management, Accounting, Personnel, Legal, Tax, Public Relations, etc.

3. Investments

Plant Property and Equipment (PP&E) are assets acquired for the use in the operation of the business and not intended for resale to customers.

Accounts Receivable is the amount which a company expects to collect from its customers for goods and services sold to them on credit.

Inventory consists of the aggregate of all goods consumed in the production of product to be available for sales.

Accounts Payable is the amount a company owes to creditors for goods and services purchased on credit such as raw materials and packaging supplies.

4. Cash Flow

Capital Spending is the cash outlay in a given period for the construction or purchase of plant, property and equipment.

Working Capital is the sum of accounts payable, accounts receivable, and inventory.

Terminal Value is the estimated market value of the plant, property, and equipment at the end of the term.

D. Assumptions

The following assumptions were used in generating the Income and Cash Flow statements for the US/Russian Vaccine Company.

1. General

- All costs are shown in 1993 US currencies with an exchange rate of 1,000 rubles per US dollar.

- Local prices for vaccines and expenses will be increased to offset the devaluation of the ruble.

- No profits will be made outside the United States.

- The income generated by the Vaccine Company remains in rubles, however, convertibility may be allowed for reinvestments such as purchases of additional vaccine components and equipment, etc.

- The Vaccine Company will purchase US intermediates of diphtheria, tetanus, pertussis and polio monopools Type I, II and III in US dollars for shipments to Russia.

2. Market

- Three manufacturers, BIOMED in Russia, Biolek in Kharkiv, Ukraine and this Vaccine Company will be able to supply DTP vaccine to the CIS. This Vaccine Company will capture 33% market share for DTP for Russia and the Ukraine. For the remaining CIS republics, this Vaccine Company will capture 50% market share.

- Two manufacturers of polio vaccine, the Institute of Polio, in Russia and this Vaccine Company will produce polio for the CIS. It is projected that this company will capture 50% of the market share for all of the CIS.

3. Sales

- The selling prices are $0.50 US per dose for DTP and $0.50 US per dose for OPV. These selling prices are considerably higher than current Russian and WHO prices. The Polio Institute currently sells OPV at 20 rubles per dose ($0.02) and WHO prices range from $0.10 to $0.20 per dose. It is anticipated that by the time this facility becomes operational, the selling price of DTP and OPV will be comparable to Russian and WHO standards.

- Since the cold chain distribution is system is in need of major overhaul, it is difficult to project the cost associated with the transportation and freight. These costs are projected to be 1% of gross sales based on U.S. industry standards.

4. Expenses

- Manufacturing Cost of Goods is the sum of all expenses associated with the manufacture of DTP and OPV vaccines once the facility is operational. Major expenses include salaries for Russian and American staff, purchase of intermediates, raw material, and supplies, utilities and services for ongoing operations, and depreciation, etc.

  Expenses related to the manufacturing cost of goods are difficult to determine due to lack of available or accurate information. Russian salaries vary depending on the job and level. In this company the salaries can range from 5,000-100,000 rubles/month. Utility rates are also difficult to determine since services were previously allocated to the institutes and typically paid by the state. The following table illustrates the differences in costs for utilities in Russia.

Table I: US/Russian Vaccine Facility

Service	Consumption	Annual Costs[1] (rubles)	Annual Costs (dollars)	Annual Costs[2] (rubles)	Annual Costs (dollars)
Electric	15,105M Wh	107.2 M	$107,248	30.2 M	$30,211
Gas	3,766 KM^3/yr (33,498Gcal/yr) (133MMCF/yr)	3.8M	$3,766	36.8 M	$36,848
Water	11,912 M^3/yr (4,209 CCF/yr)	476.5 k	$476	17,868	$18
Sewer	10,760 M^3/yr (3,802 CCF/yr)	430.4 k	$430	16,140	$16
Telephone	10 Lines	445.0 k	$445	445.0 k	$445
Total		**112.4 M**	**$112,366**	**67.5 M**	**$67,537**

Notes: 1000 rubles = $1.00US
8.89Gcal/KM^3 = 1,000 BTU of natural gas
Sewer Rate = Water Rate

[1] - Mr. S. Zolotykh - Institute of Immunology, Lyubuchany, Russia
[2] - John Brown Engineers & Constructors, Petrochemical Complex, Russia

It is possible that Russian salaries and overheads may only represent a minor portion of the overall expenses related to the manufacturing cost of the vaccine. Although current cost may be low, over the long term costs will inevitably rise to around western standards. Other costs such as the purchase of intermediates of diphtheria, tetanus, pertussis and polio monopool types I, II, III and the various components to manufacture the final vaccine can also be high depending on where the components or materials are sourced. For this company, the manufacturing cost of goods is projected to be approximately 45% of net sales and is estimated based on current industry rates.

- Expenses for ten U.S. personnel to assist the Russians in startup, training and operation of this vaccine facility for two years are estimated at $140,000 to $200,000 per person per year. The breakdown of the costs per year is estimated as follows:

Salary	$80,000-$110,000
Housing	$30,000- $40,000
Transportation and Insurance	$10,000- $15,000
Schooling	$10,000- $20,000
Other Living Expense	$10,000- $15,000
Total	**$140,000-$200,000**

- The depreciation rates for buildings and equipment are 3.5% and 7.5% per year respectively. Based on a capital investment of k$103,110 for the construction of DTP and OPV manufacturing facility, the depreciation expense is projected to be k$5,413 per year commencing at the startup of the facility.

- Commercial expenses are estimated at 5% of net sales. This is lower than U.S. industry standards of 10%-15%. With the MOH as the major purchaser of vaccines, limited field force selling and promotional activities will be needed.

- Administration expenses are projected to be k$250 per year plus 10% increase per year based on the number of administrative staff and general expenses.

5. Taxes

- With the continually changing tax laws in Russia, a tax rate of 50% Net Before Tax is assumed.

6. Investment

- From the engineering study, the capital investment for the construction of the DTP and OPV vaccine manufacturing facility is M$103 and will take five years to complete (1994-1998). It is anticipated that partners in the company, US or Russian, will raise the capital for this investment either through equity contribution or outside financing.

- Accounts receivables are based on 60 day payment terms given to customers. This is a typical U.S. rate.

- The amount of product held in inventory is calculated based on 120 days of future demand at manufacturing cost of sales.

- Accounts payable is based on 45 day payment terms from creditors. This is a typical U.S. rate.

E. Financial Summaries

Income Statement A

Income Statement A represents the most realistic projection of sales, operating expenses, earnings, and cash flow of this US/Russian Vaccine Company which begins operation in 1999. Over the next ten years (1999-2008), the Vaccine Company is expected to lose K$688 average per year after tax and would not achieve a positive cumulative cash flow for at least sixteen years. The selling prices per dose of DTP and OPV are too low to support the $103M capital expenditure despite relatively high market share. Although the company generates a small positive cash flow each year, this is not sufficient to recover the contribution made for the initial investment. Not included in the financial reporting is the interest expense that would be incurred if long term financing was necessary to fund this investment.

Overall, the economics of this company cannot support the investment of this new vaccine manufacturing facility in the CIS. Although the assumptions used in generating the income statement are realistic based on the current situation, the major factors contributing to the company's losses are a) low local selling prices of DTP and OPV, and b) high capital investment

resulting in a large depreciation expense. This company may become viable if the investment was funded by Russian/Western grants or aid.

Income Statement B

Since Russian operating expenses could not be clearly defined, a second income statement was generated to demonstrate the outcome of the vaccine company's earnings and cash flow with minimal operating expenses. Only expenses related to the relocation of expatriate staff and depreciation were included and the results are illustrated in Income Statement B.

Clearly, even with minimal operating expenses, this company's business cannot survive with a capital expenditure of this magnitude. Although Statement B's earnings and cash flow improve, in reality, the financial position of this vaccine company would likely fall between Statements A and B. From a business and economic prospective, both statements demonstrate that this vaccine business is not realizable under the market conditions presented and given the high capital investment.

The next section will address the economic and overall risks and opportunities associated with the vaccine market and this type of investment in the CIS.

US-RUSSIAN VACCINE COMPANY

Statement A

k US $

No Profits Made Outside of US

P&L	1994-1998	1999	2000	2001	2002	2003	2004	2005	2006	2007	2008	TOTAL	AVG
k doses													
DTP		9,152	9,342	9,536	9,736	9,940	10,149	10,364	10,584	10,809	11,041	100,654	10,065
OPV		8,648	8,820	8,996	9,177	9,362	9,551	9,745	9,943	10,146	10,355	94,742	9,474
TOTAL		17,800	18,162	18,533	18,913	19,302	19,700	20,109	20,527	20,956	21,395	195,396	19,540
Gross Sales	$0	$8,900	$9,081	$9,266	$9,456	$9,651	$9,856	$10,054	$10,264	$10,478	$10,698	$97,698	$9,770
Transportation and Freight		$89	$91	$93	$95	$97	$99	$101	$103	$105	$107	$977	$98
Net Sales	$0	$8,811	$8,990	$9,174	$9,362	$9,554	$9,752	$9,954	$10,161	$10,373	$10,591	$96,721	$9,672
Manufacturing Cost of Sales		$3,965	$4,046	$4,128	$4,213	$4,299	$4,388	$4,479	$4,572	$4,668	$4,766	$43,525	$4,352
Expatriate Staff		$2,000	$2,000	$0	$0	$0	$0	$0	$0	$0	$0	$4,000	$400
Depreciation		$5,413	$5,413	$5,413	$5,413	$5,413	$5,413	$5,413	$5,413	$5,413	$5,413	$54,133	$5,413
Gross Profit	$0	($2,567)	($2,469)	($368)	($264)	($158)	($50)	$61	$175	$292	$412	($4,936)	($494)
Commercial Expenses		$441	$450	$459	$468	$478	$488	$498	$508	$519	$530	$4,836	$484
Selling Profit	$0	($3,008)	($2,918)	($826)	($732)	($636)	($537)	($436)	($333)	($227)	($118)	($9,772)	($977)
% of Net Sales		-34%	-32%	-9%	-8%	-7%	-6%	-4%	-3%	-2%	-1%	-10%	-10%
Administrative Expenses		$250	$275	$303	$333	$366	$403	$443	$487	$536	$589	$3,984	$398
NBT	$0	($3,258)	($3,193)	($1,129)	($1,065)	($1,002)	($940)	($879)	($820)	($763)	($707)	($13,757)	($1,376)
Taxes (50%)		($1,629)	($1,597)	($564)	($533)	($501)	($470)	($440)	($410)	($381)	($354)	($6,878)	($688)
NAT	$0	($1,629)	($1,597)	($564)	($533)	($501)	($470)	($440)	($410)	($381)	($354)	($6,878)	($688)
% of Net Sales		-18%	-18%	-6%	-6%	-5%	-5%	-4%	-4%	-4%	-3%	-7%	-7%

INVESTMENT	1994-1998	1999	2000	2001	2002	2003	2004	2005	2006	2007	2008		AVG
Net P P & E Investment	$103,110			10	$103,110	$103,110	$10	103,110	$103,110	$103,110	$103,110		$103,110
Accounts Receivable	$0			3	$1,554	$1,586		$1,653	$1,687	$1,722	$1,759		$1,606
Inventory	$1,304			5	$1,414	$1,443		$1,503	$1,535	$1,567	$1,567		$1,457
TOTAL INVESTMENT	$104,414			8				106,266		399	$106,435		$106,173
Accounts Payable	$489			9				$564		588	$5,366		$1,024

US-RUSSIAN VACCINE COMPANY

Statement A

k US $

No Profits Made Outside of US

CASH FLOW	1994-1998	1999	2000	2001	2002	2003	2004	2005	2006	2007	2008	TOTAL	AVG
NAT		($1,629)	($1,597)	($564)	($533)	($501)	($470)	($440)	($410)	($381)	($354)	($6,878)	($688)
Add: Depreciation Expense		$5,413	$5,413	$5,413	$5,413	$5,413	$5,413	$5,413	$5,413	$5,413	$5,413	$54,133	$5,413
OPERATING CASH FLOW	**$0**	**$3,784**	**$3,817**	**$4,849**	**$4,881**	**$4,912**	**$4,943**	**$4,974**	**$5,003**	**$5,032**	**$5,060**	**$47,25[illegible]**	**$4,725**
Change in working capital													
Working Capital from/(for) Operations													
Accounts Receivable	$0	($1,463)	($30)	($30)	($31)	($32)	($33)	($34)	($34)	($35)	($36)	($1,759)	($176)
Inventory	($1,304)	($27)	($27)	($28)	($28)	($29)	($30)	($31)	($31)	($32)	($32)	($1,599)	($30)
Accounts Payable	$489	$10	$10	$10	$11	$11	$11	$11	$12	$12	$12	$600	$11
Capital Spending	($103,110)											($103,110)	
WC Recovery											$3,957		
Terminal Value (PP&E)											$48,977		
CASH FLOW	**($103,925)**	**$2,305**	**$3,770**	**$4,801**	**$4,832**	**$4,862**	**$4,892**	**$4,921**	**$4,949**	**$4,977**	**$57,938**	**($5,679)**	**$9,825**
CUMULATIVE CASH FLOW	**($103,925)**	**($101,620)**	**($97,850)**	**($93,049)**	**($88,217)**	**($83,355)**	**($78,464)**	**($73,543)**	**($68,593)**	**($63,617)**	**($5,679)**		

IRR	**-1%**
ROI (10 Year Avg)	**-1%**
NPV @ 12% kS	**(48,403)**

US-RUSSIAN VACCINE COMPANY

Statement B

k US $

No Profits Made Outside of US

P&L	1994-1998	1999	2000	2001	2002	2003	2004	2005	2006	2007	2008	TOTAL	AVG
k doses													
DTP		9,152	9,342	9,536	9,736	9,940	10,149	10,364	10,584	10,809	11,041	100,654	10,065
OPV		8,648	8,820	8,996	9,177	9,362	9,551	9,745	9,943	10,146	10,355	94,742	9,474
TOTAL		17,800	18,162	18,533	18,913	19,302	19,700	20,109	20,527	20,956	21,395	195,396	19,540
Gross Sales	$0	$8,900	$9,081	$9,266	$9,456	$9,651	$9,850	$10,054	$10,264	$10,478	$10,698	$97,698	$9,770
Transportation and Freight		$0	$0	$0	$0	$0	$0	$0	$0	$0	$0	$0	$0
Net Sales	$0	$8,900	$9,081	$9,266	$9,456	$9,651	$9,850	$10,054	$10,264	$10,478	$10,698	$97,698	$9,770
Manufacturing Cost of Sales		$0	$0	$0	$0	$0	$0	$0	$0	$0	$0	$0	$0
Expatriate Staff		$2,000	$2,000	$0	$0	$0	$0	$0	$0	$0	$0	$4,000	$400
Depreciation		$5,413	$5,413	$5,413	$5,413	$5,413	$5,413	$5,413	$5,413	$5,413	$5,413	$54,133	$5,413
Gross Profit	$0	$1,487	$1,668	$3,853	$4,043	$4,238	$4,437	$4,641	$4,850	$5,065	$5,284	$39,565	$3,957
Commercial Expenses		$0	$0	$0	$0	$0	$0	$0	$0	$0	$0	$0	$0
Selling Profit	$0	$1,487	$1,668	$3,853	$4,043	$4,238	$4,437	$4,641	$4,850	$5,065	$5,284	$39,565	$3,957
% of Net Sales		17%	18%	42%	43%	44%	45%	46%	47%	48%	49%	40%	40%
Administrative Expenses		$0	$0	$0	$0	$0	$0	$0	$0	$0	$0	$0	$0
NBT	$0	$1,487	$1,668	$3,853	$4,043	$4,238	$4,437	$4,641	$4,850	$5,065	$5,284	$39,565	$3,957
Taxes (50%)		$743	$834	$1,927	$2,022	$2,119	$2,218	$2,321	$2,425	$2,532	$2,642	$19,783	$1,978
NAT	$0	$743	$834	$1,927	$2,022	$2,119	$2,218	$2,321	$2,425	$2,532	$2,642	$19,783	$1,978
% of Net Sales		8%	9%	21%	21%	22%	23%	23%	24%	24%	25%	20%	20%

INVESTMENT	1994-1998	1999	2000	2001	2002	2003	2004	2005	2006	2007	2008		AVG
Net P P & E Investment	$103,110	$103,110	$103,110	$103,110	$103,110	$103,110	$103,110	$103,110	$103,110	$103,110	$103,110		$103,110
Accounts Receivable	$0	$1,463	$1,493	$1,523	$1,554	$1,586	$1,619	$1,653	$1,687	$1,722	$1,759		$1,606
Inventory	$0	$0	$0	$0	$0	$0	$0	$0	$0	$0	$0		$0
TOTAL INVESTMENT	$103,110	$104,573	$104,603	$104,633	$104,664	$104,696	$104,729	$104,763	$104,797	$104,832	$104,869		$104,716
Accounts Payable	$0	$0	$0	$0	$0	$0	$0	$0	$0	$0	$0		$0

US-RUSSIAN VACCINE COMPANY

Statement B

k US $

No Profits Made Outside of US

CASH FLOW	1994-1998	1999	2000	2001	2002	2003	2004	2005	2006	2007	2008	TOTAL	AVG
NAT		$743	$834	$1,927	$2,022	$2,119	$2,218	$2,321	$2,425	$2,532	$2,642	$19,783	$1,978
Add: Depreciation Expense		$5,413	$5,413	$5,413	$5,413	$5,413	$5,413	$5,413	$5,413	$5,413	$5,413	$54,133	$5,413
OPERATING CASH FLOW	**$0**	**$6,157**	**$6,247**	**$7,340**	**$7,435**	**$7,532**	**$7,632**	**$7,734**	**$7,838**	**$7,946**	**$8,055**	**$73,915**	**$7,392**
Change in working capital													
Working Capital from/(for) Operations													
Accounts Receivable	$0	($1,463)	($30)	($30)	($31)	($32)	($33)	($34)	($34)	($35)	($36)	($1,759)	($176)
Inventory	$0	$0	$0	$0	$0	$0	$0	$0	$0	$0	$0	$0	$0
Accounts Payable	$0	$0	$0	$0	$0	$0	$0	$0	$0	$0	$0	$0	$0
Capital Spending	($103,110)											($103,110)	
WC Recovery											$1,759		
Terminal Value (PP&E)											$48,977		
CASH FLOW	**($103,110)**	**$4,694**	**$6,217**	**$7,309**	**$7,404**	**$7,500**	**$7,599**	**$7,700**	**$7,804**	**$7,910**	**$58,755**	**$19,783**	**$12,299**
CUMULATIVE CASH FLOW	**($103,110)**	**($98,416)**	**($92,199)**	**($84,890)**	**($77,486)**	**($69,986)**	**($62,387)**	**($54,687)**	**($46,883)**	**($38,972)**	**$19,783**		

IRR	**2%**
ROI (10 Year Avg)	**2%**
NPV @ 12% kS	**(38,922)**

Section VIII

SUMMARY

and

CONCLUSIONS

VIII. Summary and Conclusions

As stated in the objectives, the intent of this feasibility study was to assist interested parties in assessing the opportunities and risks associated with rebuilding the vaccine industry in the NIS. This study could also be used by commercial banks, multinational corporations, the World Bank, and Government agencies to evaluate the potential for privatization of the vaccine industry and to encourage private sector investment through commercialization such as joint venture participation by American firms.

While there are great expectations about long-term prospects for trade and investment in the CIS, much of this will depend on the successful resolution of a number of key issues. Whether through acquisition, joint venture or financing of projects, the inherent risks for investing in this region can be overcome. The following section discusses the various issues that a foreign investor will need to address when establishing the overall business strategy for making an investment in the CIS. Although some issues are more specific to the vaccine business, the majority are broader issues that also require assessment for any type of venture in this region.

A. Overall Assessment

1. Project Viability-Financial Assessment

To succeed in any business venture, the financial position of the enterprise must be able to reflect positive earnings and cash flow from year to year and pay dividends to its shareholders. The ability to raise financing for capital investments such as this new vaccine facility is contingent on a lenders' assessment of the project viability. Today, foreign investors continue to have difficulty evaluating projects and determining the validity of information such as the availability and cost of local supplies, materials, utilities, and so on, and credit worthiness of local parties offering collateral guarantees.

The financial prospects for this vaccine manufacturing company as illustrated in the previous section indicate the difficulties that this business venture will encounter. Russian and world vaccine prices for DTP and OPV are extremely low and capital investments of this magnitude can only be supported by large production volumes to achieve the economies of scale. The Polio Institute, which annually produces 80-100M doses of polio currently sells the vaccine for 20 rubles per dose ($0.02 US at 1000 rubles/$1.00). Polio prices for WHO range $0.10 - $0.20 US per dose. It is unlikely that any Ministries of Health could afford to purchase both DTP and

polio vaccines at prices much higher than the current rate or that local selling prices would increase faster than world prices.

The investment required for improving quality is substantial in both cost and time. The M$103 capital needed for the construction of the new vaccine manufacturing facility reflects the investment in high technology that is required to produce vaccines under US FDA, cGMP, and Russian standards. Specialty labor and materials required to ensure the quality necessary to meet these standards offset lower local costs, and facility construction would likely take longer than what is anticipated for the West.

The benefits of local manufacturing are not well defined. Justifications for local manufacture are usually based on lower costs or higher sales (price and volume) and while costs may be low in some cases, they will inevitably rise to around "international" levels. In addition, extensive work is required to establish local manufacturing particularly in the specialized field of vaccines. Although reducing costs would maximize the margins available, it is not easy to demonstrate the benefits of local manufacture once the acquisition price, inward investment, and management time are all taken into account.

The rationale for investing in local manufacturing especially for commodity products like DTP and OPV vaccines needs to be clearly understood. Most international companies compete in R&D based organizations where equity investment is usually justified on prospective realizable returns. These depend on consumer loyalty to current and new products. The uncertainty of business prospects in CIS vaccine sales is high since the Ministries of Health are currently the sole purchasers of vaccine. Supply contracts to vaccine manufacturers can be either all or nothing scenarios. Given the magnitude of the initial investment, the need to secure substantial market position early in the business plan is critical. The survival of the venture can only be achieved with the support of the various government authorities and secured purchase contracts from the MOHs over a number of years.

Without higher selling prices or volume to compensate for the initial capital expenditure, this business becomes difficult to sustain. It is for this reason that only a few vaccine companies exist throughout the world today.

2. Product Portfolios

The investment in a bacterial (DTP) and viral (OPV) manufacturing facility offers the capacity to produce other vaccine products which were not included in this feasiblity study. Various combinations of diphtheria and tetanus toxoids (dT, Td, and TT), diphtheria-tetanus-acellular pertussis vaccine (DTaP), and *Haemophilus influenzae* type b (Hib) vaccine can also be manufactured in this facility.

The need for DTP and OPV vaccines will be diminished in the near future. The reasons are that the eradicatation of poliomyelitis in the Western world is projected and DTP will be combined with other vaccines of Hib, hepatitis B, and IPV. New vaccine development has been focused on diseases against pnuemococcal pnuemonia, meningitis, rotavirus, herpes, and others. To date, the CIS has not placed much emphasis on these diseases. Although it is believed that these diseases do exist in this region, little or no epidemiological information is available to determine the extent to which they are affecting the population.

3. Privatization

Privatization has been a major issue for local manufacturers. For the health care industry in Russia, privatization has been more complex, slower and less successful than was envisaged. Agreement on the form of privatization in the health care industry continues to change especially since this industry had been held to be of "strategic importance." Russia has developed privatization rules but this industry falls into a special category and has been excluded from privatization programs to date. The Institute of Immunology went through this process at the end of 1992 only to have this reversed in May 1993. Once again, the institute is a state owned enterprise.

4. Land and Property Rights

Establishing ownership rights to property in the CIS is complex and bureaucratic. Under recent Russian legislation, the relevant state property committee at the federal, regional, or municipal level must also be involved. This can be laborious and time consuming. Work continues on new laws to permit foreign controlled entities and foreign persons to own land.

5. Legal and Regulatory Environment

The foreign investor in the CIS faces a uniquely untested and fluid legal and regulatory environment. A constant stream of new laws that is often times inconsistent with existing legislation makes planning difficult. Legal gaps, particularly in privatization, liability and accountability for mismanagement or misconduct, and shareholders' rights, are of great concern. Legislation in most CIS countries does not adequately address the concerns of the investor such as anti-trust, anti-monopoly, bankruptcy, consumer protection, securities regulation, intellectual property and secured lending and general legal rules lack clear guidelines on many key issues.

For the vaccine industry, the protection of intellectual property such as patents, trademarks, copyrights, etc. is important. Although Russia, Ukraine, and other states are in the process of replacing older USSR laws on intellectual property, it is still too early to judge whether the recent legislation provides effective protection and whether it will be possible to obtain prompt and effective relief for infringements.

6. Environmental Issues

The foreign investor must carefully consider any potential environmental liabilities and all existing rights and obligations of the local enterprise, particularly if the enterprise continues to be bound under the old system of state orders. The recently enacted environmental law in Russia states broad principles but provides neither for ecological standards nor clarifies the competence of various state bodies.

7. Ruble Devaluation and Non-Convertibility

Non-convertibility of the ruble continues to be a major constraint for foreign investment. This has led to cumbersome currency laws and regulations which constrain the structuring of investments and money flow. The repatriation of profits without the means to convert ruble profit into hard currency is meaningless. Valuing capital contributions of local and foreign investors in the face of rapid inflation is also a major issue, particularly where the investment is high and the equity positions in the company are based on cash or capital contributions. Even modest investments may trigger anti-monopoly, local securities or other rules which can add to the complexity of the government approval process.

8. Taxation

New tax laws covering enterprise profit tax, property and land tax, personal tax, excise tax, value added tax, and other types of taxes have been imposed by different governmental authorities. Although exemptions and tax privileges may be available, investors will need to investigate whether the government agencies offering them will have legal authority to do so.

9. Labor Legislation

The CIS is unfamiliar to the Western concept of "employment at will" which allows employers to terminate employees. New labor rules may provide extensive protection of workers even if performance is unsatisfactory and local laws have not adequately dealt with issues such as protecting trade secrets and rights to inventions created during course of employment.

10. Political Environment

The ongoing legislative changes in the CIS will continue to be a constant in the business environment. The decentralization of the legislative and executive powers between the federal government and the regions allows the local and regional authorities to have more autonomy. Local legislators have already adopted regulations which in some instances contradict the federal legislation especially in the economic and business areas. Some regions have already obtained the status of free economic zone to attract foreign investment without supervision by Moscow. This erratic and rapid decentralization is a result of the Federal government's inability to effectively manage reforms and to provide adequate financial, legislative, and administrative support for the economic development of these regions. In turn, the regions that have significant resources and developed industry will continue to seek economic and political independence. The benefits of foreign investments in these areas may mean faster approvals for economic development.

B. Recommendations

Political and economic instability make for a very risky business environment and a multitude of problems. This combination of unlimited opportunities and high risk creates a challenge for any company that is willing to gamble in the new CIS markets. Those who take the risk without understanding the issues as previously stated will most certainly fail. However, these issues can be overcome. The key to the business success of this vaccine venture will be to minimize risk.

Since this will relate to market forces and initial capital investment, the following alternative strategies are recommended to reduce the level of risk.

- Begin selling finished vaccines for rubles and reinvest the profits for expanding operations. In the short term, the company will develop market presence for current and future vaccine products.

- Design capital projects to refurbish or upgrade existing operations by means of incremental investment to improve quality and productivity. A phased approach for construction: first packaging, followed by filling, and then bulk batching should be established since quality improvements and the learning process will be a long upward haul. Less ambitious interim targets can be more easily achieved while extending capital investment over a greater period of time.

- Secure guaranteed vaccine purchase contracts from Ministries of Health for at least three to five years and consider exporting vaccines to other countries. A higher volume of sales will be required in order to achieve the economies of scale from this large investment.

- If ruble or hard currency payments are not possible, identify alternative guarantees from purchasers such as bartering and counterbartering. This can be speedy and potentially more profitable. The US. Government may be able to assist U.S. investors by intervening with the Russian Government to guarantee payment.

- Obtain funds for initial capital investment from Russian or foreign aid and other financial sources to reduce cash burden on the vaccine company.

    a. Russian Government may provide support for investment since this improves the health and well-being of the country.

    b. Foreign Government aid and donor sources for capital investments in infrastructure have been significant. The Enterprise Fund as part of the US/Russia Assistance Package has been set up to support private sector development including joint ventures with Western companies in Russia and the NIS.

c. World Bank (WB), European Bank for Reconstruction and Development (ERBD) or OPIC make funds available to support credits, loan guarantees and risk insurance. The US government may be used as collateral for loans.

d. Creation of a Joint Stock Company where the capital investment is part of the equity contribution.

As always, good information will be critical in making meaningful strategic decisions.

- Investigate and recheck the reliability of knowledge and authority of the consultants and government official and enterprise managers.

- Work actively with federal, regional, and local governments. Government support should be secured early on in the project and continuous contact maintained.

- Design a system of financial and legal protection against unpredicatable changes in the government and economy. Short-term and carefully prepared deals are more manageable rather than long term and large scale business projects.

- Address deficiencies in financial information such as profit and loss, cash position, and balance sheets and establish methods to improve costing systems. Clearly identify and clarify rights to key assets of the enterprise.

C. Conclusions

Foreign investors continue to be cautious about investments in the CIS. The key to improving the long term opportunities for trade and investment lies in the convertibility of the ruble. Companies with long term approaches are focusing less on repatriating profits and looking toward ruble profit and market share. The companies with ruble profit will have an edge in acquiring privatization programs. Until then, private investment in local companies will remain modest. In addition, citing health reasons, it is unlikely that Russian or other regulators would discontinue or prohibit current local vaccine production like BIOMED or the Polio Institute.

The rebuilding of the vaccine market is critical to the health care improvement needs of the NIS. Developing the business strategy for this type of investment in the vaccine industry will depend on the investor's overall strategic plan taking into account the changing political, economic, and

legal environment. In summary, companies who will succeed in the NIS are those who can rise to the challenges of the issues facing this region's health industry.

NOTE:

This feasibility study was based on the application of scientific principles and professional judgment from facts currently available and with resultant subjective interpretations. The information, conclusions and recommendations stated herein are intended as guidance and not necessarily a firm course of action. While Lederle-Praxis Biologicals believes the information presented herein to be accurate, **Lederle-Praxis Biologicals makes no representations or warranties express or implied whether of fitness or merchantability, with respect to the information, conclusions or recommendations stated herein.** Investors who are interested in making an investment in the NIS should perform a feasibility assessment based on the specific circumstances and goals of their respective interests to determine if such an investment is viable.

360

Section IX

REFERENCES

and

CONTACTS

LIST OF REFERENCES AND CONTACTS

REFERENCES

a Expanded Program on Immunization, Outbreak of Diphtheria, update, Russian Federation, *Weekly Epidemiological Record*, No. 19, May 1993, pp. 134-138.

b Bohlen, C., Diphtheria Epidemic Sweeps Russia, *New York Times*, January 19, 1993.

c Oblapenko, G., Poliomyelitis in Europe in 1992, *WHO Meeting on Vaccine Supply in NIS*, March 17, 1993.

d Raymond, S., Vaccine Production Audit Mission, *USAID Back to Office Report*, March 1-7, 1992.

e Barrett, M., A Glimpse of Pediatrics in Moscow, *Contemporary Pediatrics*, November 1992, pg. 84-100.

f Background Paper, Health Care Needs of the Commonwealth of Independent States, *U.S. Aid for International Development and U.S. Department of State*, January 16, 1992.

g CIS, US Agency for International Development Health Profile, *Center for International Health Information*, April 24, 1992, pg. 9-10.

h Kendal, A. and Hovanesian, A., Consolidated Database on Vaccine Supply and Demand Situations in the NIS, *WHO Meeting on Vaccine Supply in NIS*, March 17, 1993.

i Crozier, K., Once controlled, diphtheria stages comeback in Russia, *Infectious Disease in Children*, May 1993, pg. 12-13.

j Iassinski, A., Immunization Rate and Incidence of Disease in the Russian Federation, *WHO Meeting on Vaccine Supply in NIS*, March 17, 1993.

k Kendal, A., A Perspective on Partnerships in Vaccine Supply for NIS, *WHO Meeting on Vaccine Supply in NIS*, March 17, 1993.

l Denisov, I., Infectious Diseases and Their Prevention as a Public Health Problem, 1991.

m Statute of the State Committee for Sanitary and Epidemiological Surveillance of the Russian Federation, by *Enactment No. 30 of the President of the Russian Federation*, January 22, 1992.

Anderson, Arthur, Changes in Russian Taxes, *Business and Investment in Eastern Europe*, 1993, pg. 569-572.

Andrew, Michael, Expatriate Transfers - The Hidden Costs, *Business and Investment in Eastern Europe*, 1993, pg. 77-78.

Budashewitz, P., History and Overview of the Structure of Vaccine Regulatory Control, *U.S. Food and Drug Administration International Affairs*, September 1993.

Clark, Graham, Changing Structures in Eastern European Countries, *Sript Magazine*, October 1993, pg 28-32.

Drosdov, S., Oral Poliovirus Vaccine Production in the Institute of Poliomyelitis and Viral Encephalitis (Moscow, Russia) and Vaccine Distribution: Present Situation and Some Perspectives, *WHO Meeting on Vaccine Supply in the NIS*, March 17, 1993.

Freeland, C., Russia to start mass diphtheria immunization, *Financial Times*, August 19, 1993, pg. 1.

Kohan, John, Holding Russia's Fate in His Hands, *Time Magazine*, Dec 7, 1992, pg. 36-39.

Leaver, Nigel, Trade Opportunities, *Business and Investment in Eastern Europe*, 1993, pg. 481-482.

Oleynik, Igor, Russia: New Challenges, Realities, and Some Hints for Success, *Business and Investment in Eastern Europe*, 1993, pg. 97-105.

Petchenkine, Youry, A Guide to the Profits Tax on Foreign Entities and the US-Russia Tax Treaty, *Business and Investment in Eastern Europe*, 1993, pg. 563-567.

Starr, Robert, Structuring and Financing Investments in the CIS, *Business and Investment in Eastern Europe*, 1993, pg. 475-479.

Steinglass, R., Cold Chain Needs Assessment, *WHO Meeting on Vaccine Supply of the NIS*, March 17, 1993.

Voronkov, Vladimir, How to Pay Taxes in Russia, *Business and Investment in Eastern Europe*, 1993, pg. 568.

WHO Acts to Prevent Ex-USSR Vaccine Crisis, *Market Letter*, April 19, 1993, pg. 13.

CONTACTS

American Cyanamid Company	Business Phone:	201-831-2000
Lederle-Praxis Biologicals Division	Business Fax:	201-831-4149
1 Cyanamid Plaza		
Wayne, NJ 07470		
or		
401 North Middletown Road	Business Phone:	914-732-5000
Pearl River, NY 10965	Business Fax:	914-732-5511

Mr. Eric Borin	Engineering
Mr. Stuart Boyer	Parenteral Filling and Packaging
Mr. James Brandt	Viral Production
Dr. Bonnie Brock	Animal Testing
Mr. Christopher Breuninger	Microbiological Testing
Ms. Kathryn Daley	Technical Specialist
Mr. Thomas Echkardt	Regulatory
Mr. C. Giolli	Accounting
Mr. Robert Hackett	International Marketing
Dr. J. Hawthorne	Virology Testing
Ms. Greig Lu-Chi	Project Director
Dr. Kerion Kowal	Director of Manufacturing
Ms. Pamela Symos	Packaging Engineer
Dr. Thomas Monahan	Quality Control and Quality Assurance
Mr. William O'Neill	Engineering
Ms. Sandy Peterson	Purchasing
Ms. Lorrie Pownall	Resource Planning
Dr. Mary Ritchey	Vice President of Operations
Mr. Robert Schaper	Engineering
Dr. Jane Scott	Business Development
Dr. Dmitry Shchiglik	International Operations
Dr. Ken Surowitz	Bacterial Production
Mr. Hugh Syme	Labeling and Packaging
Mr. John Zinzarella	Accounting

365

Flad and Associates	Business Phone:	608-238-2661
6200 Mineral Point Road	Business Fax:	608-238-6727
P. O. Box 5098		
Madison, WI 53705		

Ms. Rachel Davey	Design/Drafting
Mr. Anthony DeEulio	Design/Drafting
Mr. James Gazvoda	Vice President, Architect
Mr. Robert Graves	Principal-in-Charge
Mr. Paul Grzeszczak	Design/Drafting
Mr. Ralph Jackson	Contributing Principal
Mr. Robert Hodgson	Landscape Architect
Mr. Eric Slifer	Equipment Specialist
Ms. Kathryn Tyson	Project Manager

Affiliated Engineers, Inc.	Business Phone:	608-238-2616
625 North Segoe Road	Business Fax:	608-238-2614
P.O. Box 5039		
Madison, WI 53705		

Mr. Michael Bernauer	Process Engineer
Mr. Ronald Johanning	Electrical Engineer
Mr. Eugene Nelson	Mechanical Engineer
Mr. Timothy Peckham	Project Manager, Engineer
Mr. Larry Powers	Piping Engineer
Mr. Ken Vahn	Computer Aided Design (CAD)

Environmental Resource Management, Inc.	Business Phone:	215-524-3746
855 Springdale Drive	Business Fax:	215-524-7335
Exton, PA 19341		

Mr. Paul Morin, P. G.	Senior Principal Geologist

366

Environmental Resource Limited	Business Phone:	48-22-15-35-44
ERM Polska Sp. z.o.o	Business Fax:	48-22-15-35-44
ul Rzezbiarska 28A		
04-633 Warszawa		
Poland		
Mr. Jerzy Kollajtis	Environmental Engineer	
John Brown Engineers & Constructors Limited	Business Phone:	207-32-69
101000 Pokrovsky Boulevard	Business Fax:	230-28-38
4/17, kv 26/27		
Moscow, Russia		
or		
1 Buckingham Street	Business Phone:	0705-822300
Portsmouth, PO1 1HN	Business Fax:	0705-733028
United Kingdom		
Mr. Brian Bardrick	Senior Project Manager	
Mr. David Stapley	Pharmaceutical Consultant	
Giproniimedprom (SAPHEC)	Phone:	120-51-81
Nauchnyj pr., 6		
117246 Moscow		
Russia		
Mr. Igor Topnikov	Chief Project Engineer	