PN-ABP-597
83523

U.S. AGENCY FOR
INTERNATIONAL
DEVELOPMENT

A Report of the Office of Energy and Infrastructure

ADVANCING COGENERATION IN THE INDIAN SUGAR INDUSTRY

THREE MILLS IN TAMIL NADU AND MAHARASHTRA

Bureau for Research and Development
U.S. Agency for International Development
Washington, D.C. 20523-1810

Report No. 93-02

A Report of

USAID/New Delhi
and the
Office of Energy and Infrastructure
Bureau for Research and Development
United States Agency for International Development

ADVANCING COGENERATION IN THE INDIAN SUGAR INDUSTRY

Three Mills in Tamil Nadu and Maharashtra

Prepared by:

Winrock International
and
International Development and Energy Associates, Inc.

1611 N. Kent Street
Arlington, VA 22209

Biomass Energy Systems and Technology Project
DHR-5737-A-00-9058-00

Energy Planning and Policy Development Project
DHR-5728-C-00-9074

May 1993

This publication was made possible through support provided by the Office of Energy and Infrastructure, Bureau for Research and Development, U.S. Agency for International Development. The opinions expressed herein are those of the author(s) and do not necessarily reflect the views of the U.S. Agency for International Development.

ACKNOWLEDGEMENTS

This study is based on the findings of a project team which visited India from April 20 to May 5, 1992. The team members were S. Padmanabhan (Team Leader), Ken Langer (Business Development), Felix Ah-Kee (Sugar/Cogeneration), George St. John and Rick McQuain (Power Purchase Contracts), Don Hertzmark (Financial Analysis), Arun Sanghvi (Utility Economics). The U.S. project team, joined by Brad Hollomon in July 1992, worked in close association with its Indian collaborators, Thermax Ltd., Pune. Mr. Harish Bhargava and Mr. P.K. Sen, Directors of Thermax Ltd., were intimately involved in all stages of the study.

The above authors wish to acknowledge the support and direction from Dr. David J. Jhirad, Sr. Energy Advisor, Office of Energy & Infrastructure of USAID, and Dr. Franklin Tugwell, Director of the Renewable Energy and the Environment Program at Winrock International Institute for Agricultural Development. The team also places on record its appreciation to the USAID/India mission and, in particular to Dr. John Grayzel, Chief, Office of Technology Development & Enterprise, for his assistance and cooperation. In India the team received key logistical and professional assistance from the staff of Thermax Ltd., in particular Mr. Shishir Athale, Mr. Pradeep Gaur, Mr. Sridhar Ramanan, Mr. M.J. Shaikhali and Mr. Sridhar. In addition, the technical insights provided by Mr. P.J. Manohar and Mr. D.S. Murali, Tata Consulting Engineers, is greatly appreciated. The team expresses its sincere appreciation to the Managements of the three sugar factories for the courtesy and hospitality extended when visiting the mills - Mr. Ram V. Tyagarajan, Chairman and Mr. P. Solaimuthu, General Manager, Thiru Arooran Sugars Ltd.; Mr. K. Jayachandran, Additional General Manager, Aruna Sugars & Enterprises Ltd.; Mr. Mansinghrao J. Jadhav, Managing Director, Vasantdada Shetkari Sahakari Sakhar Karkhana Limited (VSSK), Sangli; and Dr. D. G. Hapase, Director and Mr. A. R. Patil, Chief Engineer, Vasantdada Sugar Institute (VSI), Pune. The team also benefitted greatly from discussions with Mr. Ajit M. Nimbalkar, Chairman, Maharashtra State Electricity Board, and his officers. Likewise the team owes its sincere appreciation to the unflagging assistance and courtesy extended to it by Mr. Chikobba, Member Generation, Tamil Nadu Electicity Board, and his officers. The team also gratefully acknowledges the support and information received from Westinghouse Electric Corporation, Orlando, Florida, U.S.A.

Brad Hollomon compiled and edited the report. Finally, both Fay Ellis and Rowena Laxa deserve special mention and thanks for their excellent administrative and secretarial support on the report.

TABLE OF CONTENTS

ACKNOWLEDGEMENTS 3

ABBREVIATIONS AND ACRONYMS 8

EXECUTIVE SUMMARY 11
- Background 11
- Findings and Conclusions 12
- Discussion 13
  - Cogeneration Case Studies 13
  - Financial Analysis 14
  - Pricing of Power Sales by Cogenerators 15
  - Power Purchase Contracts 15

1.0 INTRODUCTION 17
- 1.1 Background 17
  - 1.1.1 EMCAT and the Current Study 17
  - 1.1.2 Study Objectives 17
  - 1.1.3 Study Focus: Sugar Industry in Two States 18
  - 1.1.4 Study Team and Assignments 19
  - 1.1.5 Study/Project Phases and Study Chapters 20
  - 1.1.6 Pre-Qualification Survey 21
- 1.2 The Indian Sugar Industry 22
- 1.3 Power Sector And Cogeneration In India 23
  - 1.3.1 Organization Of The Indian Power Sector 23
  - 1.3.2 Electricity Supply And Demand 25
  - 1.3.3 Capital Constraints 26
  - 1.3.4 Recent Policy Changes - Role of Private Sector 26
  - 1.3.5 Cogeneration to Date 27
  - 1.3.6 Potential for Commercial Cogeneration 28
  - 1.3.7 Major Obstacles to Commercial Cogeneration 29
- 1.4 The Power Situation In Tamil Nadu and Maharashtra 30
  - 1.4.1 Power Situation in Tamil Nadu 30
  - 1.4.2 Power Situation in Maharashtra 31
  - 1.4.3 Cogeneration in Tamil Nadu and Maharashtra 31

2.0 COGENERATION PROJECT DEVELOPMENT CASE STUDIES 35
- 2.1 Summary 35
- 2.2 Technology Perspective 36
  - 2.2.1 Cogeneration Systems in India 36
  - 2.2.2 Sugar Mill Steam and Energy Economy 37
    - 2.2.2.1 Steam Economy -- Short Term 38
    - 2.2.2.2 Steam Economy -- Medium Term 38
    - 2.2.2.3 Steam Economy -- Long Term 39
- 2.3 Methodology and Design Approach 39
  - 2.3.1 Base Case Conditions 41
  - 2.3.2 Cogeneration System Options 41

2.4 Case Study A: Aruna Sugars & Enterprises Ltd. 42
2.4.1 Introduction 42
2.4.2 System Options 44
2.4.2.1 The Base Case 44
2.4.2.2 Option 1 46
2.4.2.3 Option 2 48
2.4.2.4 Option 3 50
2.4.2.5 Option 4 52
2.4.2.6 Option 5 53
2.4.2.7 Option 6 55
2.4.2.8 Option 7 56
2.4.3 Summary of System Options 58
2.5 Case Study B: Thiru Arooran Sugars Ltd. 58
2.5.1 Introduction 58
2.5.2 System Options 59
2.5.2.1 The Base Case 60
2.5.2.2 Option 1 61
2.5.2.3 Option 2 63
2.5.2.4 Option 3 64
2.5.2.5 Option 4 66
2.5.2.6 Option 5 67
2.5.2.7 Option 6 69
2.5.2.8 Option 7 70
2.5.4 Options Finalized at Madras Workshop 72
2.5.4.1 Option 8 72
2.5.4.2 Option 9 73
2.5.5 Summary of System Options 74
2.6 Case Study C: Vasantdada Shetkari SSK Ltd. 75
2.6.1 Introduction 75
2.6.2 System Options 76
2.6.2.1 The Base Case 76
2.6.2.2 Option 1 78
2.6.2.3 Option 2 79
2.6.2.4 Option 3 81
2.6.2.5 Option 4 82
2.6.2.6 Option 5 84
2.6.2.7 Option 6 85
2.6.3 Summary of System Options 87
3.0 FINANCIAL ANALYSIS OF PROPOSED COGENERATION PLANTS 89
3.1 Introduction 89
3.2 Assumptions and Model Inputs 89
3.2.1 Power Purchase Prices 89
3.2.2 Power Generation and Export 90
3.2.3 Project Cost Assumptions 91
3.2.4 Project Financial Structure 91
3.3 Financial Results 92

4.0 PRICING OF POWER SALES BY COGENERATORS 95
4.1 Introduction 95
4.1.1 Background 95
4.1.2 Organization Of Chapter 96
4.2 Pricing Framework 96
4.3 Estimating Avoided Cost 98
4.3.1 Avoided Energy Cost 98
4.3.2 Avoided Generation Capacity Cost 98
4.3.2.1 Peaker Method 99
4.3.2.2 Proxy Unit Methods 99
4.3.2.3 Differential Revenue Requirements Method 100
4.3.2.4 Cost of Bulk Power Purchase Method 100
4.3.4 Avoided Network Capacity Cost 101
4.4 Power Purchase Tariff: TNEB 102
4.4.1 Introduction 102
4.4.2 Analysis Of TNEB's Avoided Cost 108
4.4.2.1 General Approach 108
4.4.2.2 Avoide ' Capacity Cost 109
4.4.2.3 Network Avoided Capacity Cost 109
4.4.2.4 Avoided Energy Cost 110
4.4.3 Power Purchase Tariff 114
4.4.3.1 Year-Round Operation 115
4.4.3.2 In-Season Operation 116
4.4.3.3 Interconnection Costs 117
4.5 Power Purchase Tariff: MSEB 117
4.5.1 Introduction 118
4.5.2 Analysis Of MSEB's Avoided Cost 121
4.5.2.1 Avoided Capacity Cost 122
4.5.2.2 Avoided Energy Costs 123
4.5.2.2.1 Peak Period Energy Costs 124
4.5.2.2.2 Off-Peak Period Energy Costs 124
4.5.2.2.3 Shoulder Period Energy Costs 126
4.6 Power Purchase Tariff 127
4.6.1 Year-Round Operation 129
4.6.2 In-Season Operation 130
4.6.3 Interconnection Costs 131

5.0 SAMPLE POWER PURCHASE CONTRACT 133
5.1 Introduction 133
5.2 Discussion of Terms 133
~~5.2.1 Purpose ..... 133~~
5.2.2 Basic Assumptions 133
5.2.3 Policy Considerations 133
5.2.4 Rates 134
5.2.4.1 Energy 134
5.2.4.2 Capacity 134

5.2.4.3 Wheeling and Banking 134
5.2.5 Interconnection 134
5.2.6 Approvals 135
5.2.7 Operations 135
5.2.7.1 Routine 135
5.2.7.2 Curtailment 135
5.2.7.3 Interruption 135
5.2.8 Banking 136
5.2.9 Wheeling 136
5.2.10 Metering 136
5.2.11 Permits 136
5.2.12 Term 137
5.2.13 Default 137
5.2.14 Indemnification 137
5.2.15 Assignment 137
5.2.16 Force Majeure 137
5.2.17 Dispute Settlement 137
5.2.18 Conditions Precedent 138

APPENDIX A1:
Cogeneration System Design and Cost Data:Aruna Sugars

APPENDIX A2:
Cogeneration System Design and Cost Data:Thiru Arooran

APPENDIX A3:
Cogeneration System Design and Cost Data:VSSK

APPENDIX B1:
Financial Spreadsheets:Aruna Sugars

APPENDIX B2:
Financial Spreadsheets:Thiru Arooran

APPENDIX B3:
Financial Spreadsheets:VSSK

APPENDIX C:
Model Power Purchase Contract Provisions

ABBREVIATIONS AND ACRONYMS

AEC	Ahmedabad Electricity Company
ata	Absolute Atmospheres
BEST	Biomass Energy Systems and Technology Project
BSES	Bombay Suburban Electric Supply Limited
BTU	British Thermal Units
CEA	Central Electricity Authority
CESC	Calcutta Electric Supply Corporation
DOP	Department of Power
EHT	Extra High Tension
EMCAT	Energy Management Consultation and Training
EPIC	Energy and Environment Policy Innovation and Commercialization Program
ESMAP	Energy Sector Management Assistance Program
FAC	Full Avoided Cost
GOI	Government of India
GWh	Gigawatt-hours
HT	High Tension
HV	High Voltage
IDBI	Industrial Development Bank of India Limited
IPC	Investment Promotion Cell
IPP	Independent Power Producers
IRR	Internal Rate of Return
KV	Kilovolt
KVA	Kilovolt-Amperes
kWh	Kilowatt-hours
LOLP	Loss of Load Probability
LRAIC	Long Run Average Incremental costs
LRMC	Long Run Marginal cost
LT	Low tension
LV	Low Voltage
MAPS	Madras Atomic Power Station
MSEB	Maharashtra State Electricity Board
MW	Mega-Watts
MWH	Megawatt-hours

NCAER	National Council of Applied Economic Research
NHPC	National Hydel Power Corporation
NLC	Neyvelli Lignite Corporation
NPC	National Productivity Council
NPTC	National Power Transmission Corporation
NPV	Net Present Value
NTPC	National Thermal Power Corporation
O&M	Operations & Maintenance
°C	Degrees Celsius
PFC	Power Finance Corporation
PLF	Plant Load Factor
PRV	Pressure Reducing Valve
REC	Rural Electrification Corporation
Rs	Rupees
SDF	Sugar development Fund
SEB	State Electricity Board
SEC	Surat Electric Company
TA	Thiru Arocnan Sugars Limited
TCD	Tonnes Cane per Day
TEC	Tata Electric Companies
TG	Turbo-generator
TNEB	Tamil Nadu Electricity Board
TOD	Time of Day
TPH	Tonnes per Hour
UNDP	United Nations Development Program
USAID	United States Agency for International Development
VHV	Very High Voltage
VSSK	Vasantdada Shetkari Sahakari Sakhar Karkhana Limited

ADVANCING COGENERATION IN THE INDIAN SUGAR INDUSTRY
Three Mills in Tamil Nadu and Maharashtra

EXECUTIVE SUMMARY

Background

India currently faces a peak electric generating capacity shortage of 23 percent, and approximately 10 percent of demand is left unserved. This power supply shortfall of over 15 thousand megawatts may become worse as demand growth exceeds the ability of utilities to finance new capacity. Reduced levels of electric service and reliability are impeding economic expansion and forcing utility customers who can afford them to install costly backup generators.

One potential low-cost source of future supplies is industrial cogeneration, and several studies in India, as well as experience in other parts of the world, point to the sugar industry as a prime candidate for this form of supplemental power production. Advantages include relatively low capital requirements, a renewable, indigenous waste material as a fuel, and sugar mills of sufficient number and size to make a measurable contribution to power supplies.

Building on earlier work by the World Bank and others, the case studies summarized in this report were designed to accelerate introduction of cogeneration in the sugar industry by proposing several technical system alternatives for three site-specific installations and estimating their cost and performance. The purpose was both to define better the prospects for cogeneration in the Indian sugar industry in general and to identify specific opportunities for cost-effective investments by mill owners and others.

The study goes beyond the previous work in this area by specifying and evaluating site-specific system design options at each of several mills. In addition, the study addressed the economic value of power produced by the selected mills to the State Electricity Boards in Maharashtra and Tamil Nadu, given each SEB's generating capacity mix and fuel costs, using a methodology that would be applicable for evaluating independent power from other sources as well. Finally the study team developed a preliminary set of power purchase contract provisions, based on U.S. experience, in order to facilitate any future negotiations between the SEB's and mill owners.

Previous Page Blank

Findings and Conclusions

The following principal conclusions arise from the case studies:

1. All of the sugar mills studied could be reconfigured to export power. The amounts depend on the size of the mill, the choice of cogenerating scheme, and the availability of additional fuel to supplement bagasse produced on site. The maximum output that would be available for export from each of the mills is as shown below:

Electric Power Generation for Export			
Mill	Crop Season (MW)	Off-Season (MW)	GWh per year
Aruna Sugars, Tamil Nadu	34	51	295
Thiru Arooran, Tamil Nadu	21	24	166
VSSK Sanghli, Maharashtra	12	17	89

2. Typical of mills in India, these factories now employ low pressure (21 atmosphere, 330°C) boilers to generate steam and back-pressure turbo-alternators to provide for heat and mechanical power within the plant. Installation of double extraction condensing turbines and boilers capable of producing steam at 63 atmospheres and 480°C can greatly increase power production per tonne of fuel and expand the quantity of power economically available for export. This will be a departure from conventional industrial practice in India.

3. Economic viability is highly sensitive to the amount of power exported per unit of capital investment and thus depends upon year-round operation, with supplemental fuels during the off season, and a large generating capacity relative to the internal electric demands of the mill. In addition, process steam requirements need to be reduced from over 500 kg down to 400 kg per tonne of cane. The cases examined appeared to require annual exports of at least five kWh for each US dollar (one kWh for every 5.1 rupee) invested to yield attractive financial returns. This is a reflection of the required capital investment of roughly Rs 25 per installed watt of generation capacity.

4. None of the cogeneration options at any of the mills would be profitable at the current SEB prices for purchased power, which are based on energy value alone. Including an appropriate credit for avoided utility generating capacity costs brings several technical options into the feasible range, at least for the mills in Tamil Nadu.

5. The following table summarizes the value of independent power to the two SEB's based on the estimated avoided cost of energy and generating capacity. The ranges reflect the influence of the location of the independent generator within the transmission and distribution system, and capacity prices correspond to firm contracts for output coincident with times of peak load.

	Tamil Nadu	Maharashtra
Energy (Rs/kWh)		
On-Peak Hours	1.40-1.65	0.77-0.94
Off-Peak Hours	1.40-1.65	0.53-0.60
Capacity (Rs/kW per month)		
October-April	171-492	206-535
May-September	171-492	79-378

6. The values of independently produced power shown above are based on the amount each SEB should be indifferent to paying for a source of new supply in the light of conventional alternatives. Since wheeling and banking are customary within the Indian utility industry, these figures may also be indicative of the benefits and costs of these transactions to the utility system, given the timing and location of generation and consumption.

7. Whether an SEB banks and wheels power or purchases it outright, stable long-term contracts are necessary both for the security of the investor in a cogeneration system and for the reliance of the SEB on the added increment of supply in planning and managing its generating capacity. This report ends with a chapter discussing possible contractual provisions, based on US experience, that parties in India may wish to consider.

Discussion

Cogeneration Case Studies

In the interest of maximizing the return on invested capital, the design options analyzed in the cases provide for year-around power generation. Thus during the off-season, the generated power is kept at the same level as during the season, except for scheduled shutdowns, in order to ensure delivery of firm power to the utility. In all instances, therefore, the mills require supplemental fuel during the off-season. The two mills in Tamil Nadu are located in close proximity to Neyvelli, a major source of lignite, while the one in Maharashtra would purchase, transport and store surplus bagasse from neighboring factories.

All three sugar factories presently operate under conditions where excess bagasse causes operational problems of storage and handling with no economic benefits as an energy source. Thus, steam consumption is as high as 50 to 55 percent on cane, since there is little incentive to save steam or electricity. For this reason, improved steam economy is possible, without sacrificing sugar output, through well-established technical measures that entail only modest capital investments. In certain other cases, a tradeoff may exist between electricity sales revenues and sugar recovery.

The sugar mills employ low pressure (21 atmosphere, 320 -340°C) water-tube boilers and backpressure turbo-alternators that are adequate to meet the energy needs of the plant but do not generate any exportable energy surplus. The boilers, in their present configuration, are to a large degree incinerators to dispose of bagasse generated at the mill.

To optimize surplus power generation, boiler pressure would increase to 63 atmospheres at 480°C, and installation of double extraction condensing turbines would provide the flexibility to operate year round. Although these steam pressures and turbines have not been used by the Indian sugar industry in the past, the potential gains are expected to outweigh the costs and risks associated with this technological change.

Financial Analysis

At each of the three sugar mill sites, six or seven alternative investments were examined initially under a variety of power purchase price and net exportable power scenarios. While financial results were at best marginal for the VSSK mill in Maharashtra, the Aruna and Thiru Aroonan mills presented several attractive options reflecting alternative combinations of output, investment cost and power purchase price. The power sale price at which the most attractive option at Aruna Sugars would yield a 25% pre-tax return on investment (IRR) is Rs 1.26 per kWh, and at Thiru Arooran, the equivalent figure is Rs 1.34 per kWh. Profitable cogeneration at VSSK would require a price equivalent to the Maharashtra State Electricity Board's avoided cost of 1.64 per kWh.

If a mill is in the process of expanding or updating its equipment for other reasons, the net cost of an upgrade to cogeneration-quality boilers and TGs, may be less than the values used in the analysis. Such a reduction in investment costs would improve the returns on investment. In the case of VSSK, a cooperative that pays no income tax, the management may be willing to except a lower threshold IRR and thus be able to justify a lower power sales price.

The financial assumptions appear in the table that follows.

PROJECT FINANCIAL STRUCTURE

Source of Financing	Fraction of Investment	Interest Rate	Grace Period (years)	Term (years)
Equity	10 %	--	--	--
Sugar Development Fund	40%	9%	7	8
Indian Development Financing Institution Loan	50%	19%	0	7

The monies from the Sugar Development Fund (SDF) are treated as equity by financial institutions. As a result, projects show debt:equity ratios of 50:50. (While the Sugar Development Fund may account for up to 40% of an investment, the absolute amount of funds available for a single installation may be less.) Inflation in Rs is assumed to be 9% per year, corporate income taxes are at 55% for the two mills in Tamil Nadu, and assets are depreciated using a 25% declining balance formula. More rapid

depreciation might be allowed for a portion of each project that does not involve supplemental fossil fuel.

Pricing of Power Sales by Cogenerators

In developing the power purchase tariff for the states of Tamil Nadu and Maharashtra, the report presents two components of the value of independently produced power to the utility, the avoided energy costs and the avoided capacity costs. Avoided generation capacity cost estimates for the Tamil Nadu Electricity Board (TNEB) were based upon a coal plant proxy. In the case of the Maharashtra State Electricity Board (MSEB) avoided generation capacity costs are based upon the costs of gas turbine peaking units. For estimating avoided energy costs during peak hours, a weighted combination of gas turbines and the least-efficient coal plant was used. During off-peak hours, avoided energy costs were determined using the more efficient coal plants.

Power Purchase Contracts

The report presents sample contract provisions specifying the terms and conditions under which the SEB would purchase, bank, and/or wheel power generated by a sugar mill. Based on cogenerator/utility contracts in the U.S., and taking into account specific conditions that were encountered in India, the provisions are meant to provide a starting point to facilitate successful negotiations between the mills and SEBs.

The sample provides for all three of the above types of transactions: direct sale of power, banking, and wheeling of power to third parties. Corresponding provisions can be utilized selectively where one or more of the transactions is not contemplated.

The terms presume that the output of the mill is nominal in comparison to the total capacity of the SEB, and the key policy consideration embodied in the provisions is the obligation on the part of the SEB to accept all kilowatt-hours made available for purchase, banking or wheeling. In recognition of the capacity needs of the SEB and the nature of the current load of the SEB, on-and-off peak rates were adopted to reflect better the true value to the utility grid of the capacity and energy provided by the mill. To simplify administration of the contract, the terms provide for accounting for all banking and wheeling on the basis of the economic value of the electricity involved, rather than on the nominal kilowatt hours banked or wheeled.

ADVANCING COGENERATION IN THE INDIAN SUGAR INDUSTRY:
Three Mills in Tamil Nadu and Maharashtra

1.0 INTRODUCTION

1.1 Background

1.1.1 EMCAT and the Current Study

The current study is a part of the Energy Management Consultation and Training (EMCAT) project signed in June 1991 by the Government of India and the United States of America through USAID. The purpose of EMCAT is to introduce technology, financing and management innovations in the Indian power/energy supply and end-use sectors. EMCAT's activities are meant to enhance productivity of capital resources, improve delivery of energy services and reduce adverse environmental impacts associated with power generation. Expected accomplishments of EMCAT under its Energy End-Use Component include loan portfolio design and appraisal of cogeneration and energy conservation projects; demonstration units on cogeneration; information dissemination on cogeneration; and preparation of feasibility reports for cogeneration and energy efficiency projects.

1.1.2 Study Objectives

This study is designed to fulfill a portion of EMCAT's cogeneration component program requirements. The specific aims of this study are:

1) to assess the technical options for installing cogeneration systems of various sizes and parameters in three typical Indian mills;
2) to determine the commercial viability of each technical option and to recommend those options that have the highest returns on investment;
3) to present a methodology for the utilities in two Indian states to calculate their avoided costs;
4) ~~to suggest reasonable tariff structures in the two Indian states based on the~~ avoided cost analyses;
5) to offer model power purchase contract provisions between the mills and their respected utilities, based on the experience gleaned from U.S. contracts and those issues specific to the Indian states;

Previous Page Blank

6) to recommend future activities that could be undertaken by EMCAT to promote commercial cogeneration projects in the mills selected and in general; and

7) to strengthen institutional capability to implement cogeneration projects from concept to commissioning.

In addition, the study was followed by three workshops in India. The purpose of the workshops was to communicate and discuss the findings of the study and to structure new activities that can be undertaken by EMCAT to promote these and other cogeneration projects.

The current study is a natural sequel to the joint UNDP/World Bank Energy Sector Management Assistance Program (ESMAP)[1] study, in that it attempts to address the remaining obstacles to cogeneration, especially as they relate to institutional matters. The case study approach was chosen, since it is an effective method to address real problems that impede progress on a broader front. For example, a primary component of the study was to develop model provisions that could serve as starting points for contracts between private sugar mills and utilities. It is hoped that the framework developed for the sugar mills selected in this study will be applicable to potential cogenerators in non-sugar industries, where the total all-India potential is perhaps twice that of the sugar industry.

1.1.3 Study Focus: Sugar Industry in Two States

The focus of the project is the sugar industry. The sugar industry -- which has long been cogenerating for its own purposes -- is favored as the potential entry market for cogeneration and presents a strategic opportunity to develop, test and validate commercial and business approaches to overcome the barriers restricting development. India is the largest producer of cane sugar in the world, and efficient cogeneration could yield an additional 3,800 MW of electrical power, based on the assumption that average mills can generate the same 60-80 kWh per ton cane, as achieved on average in Hawaii and borne out in this study under conditions in India.

Progress in the sugar industry could pave the way for cogeneration projects in other sectors of industry, such as paper, chemicals, and textiles. The modalities developed in the proposed project will facilitate progress toward natural gas-based cogeneration. Natural gas represents an attractive source for modular, compact cogeneration plants that can be brought on stream quickly and economically. Indeed gas turbine cogeneration plants have played a major role in the rapid development of cogeneration and private power generation in the U.S. Over the long term, natural gas

---

[1] The India, Maharashtra Bagasse Energy Efficiency Project, report No. 120/91

cogeneration is likely to play an important role in India, provided market barriers are adequately addressed.

The study focused on the sugar industry in the two states of Maharashtra and Tamil Nadu, where for the sugar industry, the greatest short-term opportunities exist. First, these states represent the second and third largest sugar states in India -- and thus were chosen for the potential market size. Second, cooperative mills in Maharashtra and private mills in Tamil Nadu represented different "testing grounds" for commercial projects. Third, Tamil Nadu and Maharashtra were chosen for the progressive attitude of their respective utilities toward commercial cogeneration. Fourth, the Tamil Nadu and Maharashtra mills which were identified by our Indian collaborator, Thermax Limited, were known to be interested in examining the potential for commercial cogeneration. This was very important for a study that is meant, above all, to lead to commercial projects.

1.1.4 Study Team and Assignments

Within the administrative framework of the USAID Biomass Energy Systems and Technology (BEST) project, a six-person team was assembled for this study. This team consisted of a team leader from IDEA Inc. and a deputy team leader from the Winrock International Institute for Agricultural Development. A sugar industry and cogeneration specialist, a financial analyst, and two power purchase contract specialists were retained as independent consultants, and a subcontract was issued to RCG/Hagler-Bailly, Inc. for the services of an economist specialized in utility avoided cost analysis with experience in India.

Thermax Ltd., a private sector energy technology company in India, functioning as a resource institution, provided key technical and logistical support, carried out the prequalification survey, participated in meetings, and reviewed reports.

Since the objective of the study was to identify bankable cogeneration projects, the emphasis was to give equal attention to institutional issues that were considered important pervasive barriers to cogeneration in India. The study and follow-up were organized into a series of tasks, with each Task being principally carried out by one or more team members, as follows:

Task	*Output*	*Principal Team Member*
Task 1:	Pre-qualification Survey	Thermax
Task 2:	Three Case Studies: Technical Options	Sugar/Cogen Specialist & Thermax
Task 3:	Three Case Studies: Financial Analysis	Financial Analyst
Task 4:	Pricing of Power Sales	Economist

Task 5:	Model Power Purchase Contracts	Contract Specialist
Task 6:	EMCAT Cogeneration Component Project Definition	Team Leader
Task 7:	Results Analysis and Preparation	Team Leader/ Deputy Team Leader
Task 8:	Workshop	U.S. Team/Thermax

1.1.5 Study/Project Phases and Study Chapters

The study was prepared in three phases. First, there was a Pre-Qualification Survey conducted in March/April '92 by Thermax Limited, discussed below. Second, the study team spent two weeks in India visiting three mills, financial institutions, Government of India officials, sugar associations, etc. A special half-day seminar on CANEPRO, a software program developed by Winrock International to assess the financial and economic viability of bagasse-based cogeneration projects was presented to the Industrial Development Bank of India (IDBI) during this Mission. Third, the analysis and report preparation task involved the participation of all team members.

This study was presented in India at three workshops in November 1992. At these workshops, all of the concerned parties -- mill owners, utilities, GOI officials, financial institutions, USAID/India, etc. -- discussed outstanding issues and explored future activities to promote cogeneration in India.

This study is organized into five chapters centered around Tasks 2-5 discussed above. Thus following the Executive Summary and Introduction (Chapter 1) the Study provides technical case studies for Aruna Sugars Ltd., and Thiru Aroonan Sugars Ltd. in Tamil Nadu and VSSK Mills in Maharashtra (Chapter 2).

The study then presents a set of financial and economic analyses for each of the three cases studied (Chapter 3). These analyses were conducted with the help of CANEPRO, described above. These analyses will help readers understand the economics of cogeneration so that they may make informed decisions. In the case of a mill, this may be simply to go ahead with a project or to reject a project. In the case of the utility, the analyses help determine a fair power purchase price. As for Government of India officials, the analyses may suggest policy changes in areas which influence project financing.

The study then moves to the institutional arena, presenting a methodology for determining tariffs based on the principle of "avoided cost" and calculating actual tariffs for both Tamil Nadu and Maharashtra (Chapter 4). This methodology should be applicable to price setting between utilities and industry in future cogeneration projects based on biomass and non-biomass fuels.

Chapter 5 presents model power purchase contract provisions between a state electricity board and a sugar mill. Based on cogenerator/utility contracts in the U.S. and taking into account specific conditions that were encountered in India, this chapter is meant to provide a starting point to facilitate successful negotiations between the mills and the utilities.

1.1.6 Pre-Qualification Survey

Prior to the field mission, a screening survey was undertaken. For reasons discussed, it was determined that the sugar industry in Tamil Nadu and Maharashtra would be the focus of the study. The task of the survey, then, was to assess the qualifications and interest of the larger mills in being included in the study.

To identify candidate mills for techno-economic case studies, detailed questionnaires were sent to eight mills in the capacity range of 2,500 TCD to 7,000 TCD in the two states. The questionnaire was divided into the following sections: 1) general information, 2) cane and bagasse, 3) steam system, 4) power system 5) turbines, and 6) AC/DC or hydraulic drives. In addition, Thermax polled the management by personal telephone calls and site visits on their interest in investing in cogeneration. The management's view on the commercial viability of such a proposal was considered a critical input.

Five sugar factories in Tamil Nadu and three in Maharashtra responded to the survey. A rating system was developed to evaluate and to screen the eight mills based on the following nine criteria. Thermax rated each area on a scale of 0-10 (10 representing the best rating for each criterion) and then totaled the points to arrive at a general rating.

1) Management outlook, degree of commitment, decision making ability, and financial resources
2) Quality of operating personnel and availability of higher personnel skills
3) Proximity to a source of secondary fuel
4) Power availability in the region
5) Existing mill capacity and potential or plans for expansion
6) Possibilities for steam and power economy
7) Potential for boiler replacement
8) Presence of captive, neighboring end-user units
9) Quality of response

In the interest of producing detailed case studies that could lead to feasibility studies and bankable projects, Aruna Sugars Ltd. and Thiru Arooran Sugars Ltd. in Tamil Nadu and VSSK in Maharashtra were chosen for the study based on the evaluation.

1.2 The Indian Sugar Industry

The following paragraphs provide a basic overview of the industry, especially its size and health (growth) as it relates to the potential for bagasse-based cogeneration. For a more detailed discussion of the sugar sector, the reader is referred to the ESMAP study.[2]

India is the largest sugar and sugarcane producer in the world. Sugar output in 1989-90 was 10.8 million tonnes. Projected output is expected to increase to 13.4 million tonnes by 1994-95, sufficient to keep pace with a 5% annual growth rate in sugar consumption.[3]

The total requirement of cane by sugar factories at a 10% rate of recovery (sugar recovered from cane) will be 131 million tonnes in 1994-95.[4] These estimates are somewhat optimistic, since sugar output has grown on average by 3.5% over the period from 1977-87. The country imports a small amount of sugar to meet demand (40,000 tonnes in 1987-88).[5] The figures cited assume that the sugar factories have access to 50% of the total cane production. In India, about 60% of the cane produced goes into making refined (centrifugal) sugar, while the remaining 40% is used by the small-scale industry to produce gur and khandsari -- traditional forms of sugar made from an open pan process at atmospheric pressure.[6]

In 1989-90, the country produced 222,628,000 tonnes of sugarcane from 3,405,000 hectares under cultivation or 65,383 kg/hectare. The northern state of Uttar Pradesh is the leading producer of cane, accounting for over 97 million tonnes or 44.6% of the total. Maharashtra and Tamil Nadu are the second and third ranking sugarcane producers, with 34,008,000 tonnes or 13.5% of total and 21,918,000 tonnes or 11.2% of total, respectively. Bagasse, the fibrous residue of the sugarcane used for raising steam in boilers, accounts for approximately 30% of the cane weight.[7]

Sugar mills are privately owned, publicly owned, and owned by cooperatives. Of the 491 licensed sugar factories, 288 are in the cooperative sector, accounting for 59% of

---

[2]India: Maharashtra Bagasse Energy Efficiency Project, Report No. 120/91, pp. 11-18

[3]National Federation of Cooperative Sugar Factories Limited, Annual Report, 1990-91, pp. 14-15.

[4]Ibid

[5]ESMAP Study, p. 13.

[6]NFCSF Annual Report, p. 16.

[7]Commercial Bio Fuel Availability Study for Tamilnadu, Tata Economic Consultancy Services, 1992. pp. 30ff.

the factories installed and 62.4% of the national output of sugar. Most of the remaining mills are in private hands.[8]

The size of sugar mills in India is small by international standards. Average mill size is under 2,000 tons crushed per day. Since 1987, however, a minimum 2,500 TCD standard has been imposed for new mills, and incentives have been created to encourage expansion to up to 5,000 TCD.

Estimates of the potential for cogeneration from the sugar industry vary widely. The ESMAP study on Maharashtra identified 13 mills with a current or expanding capacity of 3,500 TCD. This study estimated the potential of these mills to export cumulatively either 87 MW or 102 MW, depending on whether four of the mills opt for bagasse maximization or electricity maximization configurations.

1.3 Power Sector And Cogeneration In India

1.3.1 Organization Of The Indian Power Sector

The power sector organization and structure has changed considerably since the country's independence in 1947. In 1947 isolated generating facilities supplied surrounding cities, towns and industries. These generators were generally run by provincial or state governments, although in some cases the generators were operated by local authorities or private companies. Industrial generators were part of the industrial plants, which often sold electricity to neighboring townships. The central or federal government played only a regulatory role. Under the Indian Electricity Act of 1910, the federal government licensed electricity generation undertakings and defined safety requirements. The administration of the act was left to the provincial or state governments.

Soon after independence, the Government of India decided to centralize power sector planning and made state governments responsible for the management of power systems. The Indian constitution included power generation in a list of activities that would henceforth be the responsibility of both the central (federal) government and the state governments.

To discharge the above function, the Central Electricity Authority (CEA) and the State Electricity Boards (SEBs) were formed at the central and state government levels, respectively. The CEA is a statutory organization constituted under the Indian Electricity (Supply) Act, 1948. Its principal tasks are to develop a national power policy and coordinate sector development. The CEA is controlled through the Department of Power (DOP) of the Ministry of Energy, Government of India (GOI).

---

[8]NFCSF, Annual Report, p. 14.

The DOP also controls the National Thermal Power Corporation (NTPC), the National Hydroelectric Power Corporation (NHPC), the Rural Electrification Corporation (REC), and, through CEA, the five Regional Electricity Boards (REBs). NTPC and NHPC are bulk supply utilities that sell power to the SEBs. NTPC provides about 13% of India's total power supplies and is poised to increase its share of power supply to 25%, thus playing the role of the principal generation entity in the country. The NHPC supplies 3% of the national power and is not expected to increase its share of the power mix.

The REC is primarily responsible for the planning and financing of investments in rural power supply and for coordinating dispatch and interstate power exchanges in each of the country's five regional power systems. The effectiveness of the REBs presently is limited by their lack of statutory authority and by weakness in the structure of bulk power tariffs.

Finally, the DOP controls the Power Finance Corporation (PFC) and the recently established National Power Transmission Corporation (NPTC). The PFC is responsible for mobilizing non-state government resources for the SEBs; it promotes policy reform by attaching conditionalities to its loans. NPTC is expected to coordinate the development and operations of transmission systems. Initially these will be systems associated with NTPC's and NHPC's power stations; later, systems owned by SEBs will be covered.

The SEBs account for about 75% of the total generation and most of the transmission and distribution to end users. The SEBs were formed by the respective state governments as autonomous undertakings, expected to operate under guidelines prescribed in the Electricity Act. However, in practice the SEBs must obtain state government approval for decisions on investments, tariffs, borrowing, salary and personnel policies. The SEBs are grouped into five regional interconnected generation networks, coordinate overhaul and maintenance programs, and set tariffs for interstate sale of power.

India has five private utilities, which account for 5% of public supply. The private utilities are the Bombay Suburban Electric Supply Limited (BSES), Tata Electric Companies (TEC), Ahmedabad Electricity Company (AEC), Surat Electric Company (SEC), and CESC Ltd. (formerly Calcutta Electric Supply Corporation). Unlike the SEBs, the private utilities have been allowed by their respective state governments to operate autonomously, resulting in a far greater degree of technical and financial health than the SEBs. Recent GOI legislation on private power has greatly expanded the ability and incentives for private interests to undertake both generation and transmission projects.

1.3.2 Electricity Supply And Demand

India's power systems have currently (1992) an installed capacity of 69,352 MW.[9] This makes India's system comparable to those of France and the United Kingdom. In 1950, installed capacity for public utilities totaled 1,712 MW; capacity has expanded by a factor of 40 in the last 40 years and doubled in the last nine years.

The annual per capita consumption of electricity in India (about 270 kWh) is among the lowest in the world. In 1991-92, India's systems generated 286,700 GWh - about 70% from coal fired stations, 25% from hydro stations, and 5% from gas, oil and nuclear stations. In 1981 installed capacity was only 30,000 MW and generation 104,000 GWh.

The rate of growth of "suppressed" power demand (not including latent demand) averaged 12.19% per annum compounded during the decade 1960/61 to 1970/71 and declined sharply to 6.54% during the decade 1970/71 to 1980/81, mainly due to limited availability of electric power. India's power supply position has since improved and the growth rate of electricity demand has averaged 8.5% per year in the five-year period ending 1985/86.

Despite this growth, India's power systems are struggling to overcome chronic power shortages and poor power quality, resulting in a 2% loss to the GDP. Power shortages vary seasonally, being less frequent after the monsoon in August-December, when the rivers are full and hydroelectric generation is at its peak.

To provide a perspective on the scarcity issue, India currently faces a peak capacity shortage of about 23.1%, and approximately 9% of total energy demand is left unserved.[10] However, there are wide variations at the regional and state levels, with the peak deficit in the Northern region being as high as 34% compared to a minor surplus of peak capacity of 9.1% in the North - Eastern region of the country.

The response to the chronic power shortages in India has been voltage reductions and involuntary load shedding by the utilities. As a result, industrial and commercial establishments have tended to install stand-by generators. The extent of such non-utility generating capacity (as per data available from the CEA) has remained at about 10-11% of the total installed utility capacity in India since 1970-71. The utilization rate of these captive units varies significantly from region to region. A National Council of Applied Economic Research (NCAER) study in 1983-84 showed that total self-generation by all industrial consumers in the Northern region (Haryana, Punjab, Uttar Pradesh, Himachal

---

[9] "Electricity Sector in India", Department of Power, Government of India, May 1992

[10] Department of Power, Government of India

Pradesh and Jammu & Kashmir) was as high as 50% of grid consumption. For the Western region (Maharashtra and Gujarat), this percentage was 10%.

Supply constraints are exacerbated by inefficient use of power by end-users (e.g., industry) and policies that encourage waste and leave SEBs financially unable to modernize and improve efficiencies. Demand-side problems include technological obsolescence of industrial processes and equipment, poor tariff structures, and market biases in the form of inadequate commercial incentives, various price controls and producer/consumer subsidies.[11]

The GOI has recognized that increased efficiency of electricity end-use and demand management must be implemented along with supply options to mitigate power shortages and reduce the need for capital mobilization associated with capacity expansion. The latter concern has forced the GOI to institute its new private power policies.

1.3.3 Capital Constraints

To meet a higher proportion of demand and improve the quality of supply, GOI studies reveal that an additional 142,000 MW of capacity by the year 2005 at a cost of over Rs 5000 billion ($180 billion) will be needed[12]. This is equivalent to between 25% and 30% of expected allocations under the Eighth (1989/90-1994/95) and Ninth (1995/96-2000/01) Plans. This level of investment is unlikely to be funded in view of the unprecedented resource crunch faced by the GOI. Capital scarcity has already forced a major reduction in India's power expansion plans in the Eighth Plan.

Against a target of 38,369 MW (reduced from an earlier projection of 48,000 MW) estimated to cost $64 billion, as recommended by the GOI working group on power, the Planning Commission has approved an allocation of only $34.5 billion, thus effecting a cut of 46 percent. Consequently, the actual addition to power generating capacity during the Eighth Plan is expected to be only 24,468 MW. The reduced installed power generation capacities in the current Eighth Plan will almost certainly affect planned targets in the subsequent plans and, equally seriously, perpetuate the regime of endemic shortages that India faces.

1.3.4 Recent Policy Changes - Role of Private Sector

To augment resources for the capacity development in the Indian power sector, the GOI has formulated a scheme to encourage greater participation by private

---

[11] Office of Energy, USAID Report on "Opportunities for Improving End-Use Electricity Efficiency in India", November 1991

[12] Department of Power, Government of India

enterprises in electricity generation, supply and distribution. The GOI has established an Investment Promotion Cell (IPC) in the DOP to coordinate and assist the private sector in the formulation and approval of projects.[13] The new policy widens the scope of private investment in the sector by making modifications in the financial, administrative and legal environment. Some of the changes include the following:

i. The private sector can set up coal/lignite or gas-based thermal, hydroelectric, wind and solar energy projects of any size.

ii. Private sector can set up units either as "licensees" distributing power in a licensed area from own generation or purchased power; or as "generating companies," generating power for supply to the grid.

iii. Licensees holding license to supply and distribute energy in a specified area issued by the State Government will function under a liberalized economic and legal environment.

iv. Captive Power Plants set up to serve an industrial or other units by the private sector will be permitted to sell or distribute the surplus power to the State Electricity Boards.

This change has major bearing on the present study.

1.3.5 Cogeneration to Date

Industrial cogeneration has been the subject of considerable interest and inquiry in India for over a decade. The main arguments for cogeneration in India have centered on two compelling needs: i) to augment supply of power inexpensively in a regime of endemic power shortages, and ii) to promote energy conversion efficiency and thereby conserve scarce fossil fuels. In other words, the debate, until now, has centered on the use of cogeneration to ensure reliable, continuous delivery of cost effective power and to reduce dependence on fossil fuels.

Cogeneration in the sugar industry brings additional benefits. The carbon released to the atmosphere as CO_2 by cogeneration is no greater than what would have been produced by alternative methods of bagasse disposal (i.e., burning the bagasse inefficiently in the boilers or letting the bagasse decompose). Also, to the extent that cogeneration represents a good investment opportunity for sugar mills throughout India, it increases their financial health and the health of the agricultural sector as a whole.

To date, cogeneration in India has been restricted to the production of electrical energy for self use or "captive power" and has been viewed as a way to meet simultaneous on-site heat and power demands independently of the grid. Industries such

---

13 "India's Electricity Sector - Widening scope for private participation", Department of Power publication, April 1992

as sugar, pulp and paper, and textiles have been "cogenerating" electricity and steam for many years. The location of these industries in regions removed from the grid (e.g., sugar mills and paper plants), the availability of by-product fuels (e.g., bagasse and black liquor), and the steam requirements of the industrial process all combined to favor cogeneration. Beginning from the mid-seventies, the number of industries favoring cogeneration has grown to include chemical producers, oil refiners, and fertilizer manufacturers These industries possess large and simultaneous steam and power demands and have installed cogeneration units in order to insulate themselves from the undependable utility supplies and to reduce plant costs.[14]

Despite an increased use of industrial cogeneration for captive power, there has not been equal action in areas such as policy and regulation to promote the use of these systems for commercial sale of electricity. Without any way to sell their electricity for a reasonable return, sugar companies and other potential cogenerators saw little reason to discard their present systems in favor of more efficient ones that produce power for export.

1.3.6 Potential for Commercial Cogeneration

A 1989 study projects the potential for all-India cogeneration to be in excess of 10,000 MW, with the sugar industry alone capable of exporting 2,000 MW.[15] A 1986 USAID/India sponsored study explored the prospects for non-utility power generation, including cogeneration in Gujarat and Maharashtra.[16] This study indicated that the total additional capacity for sale to the grid from non-utility power generation from large-scale domestic fossil fuel plants, industrial and commercial cogeneration systems, and renewable energy systems (primarily sugar mills) exceeded 2,000 MW in these two states alone. This figure would increase to over 3,000 MW if natural gas were available. The study demonstrated that the power generation potential from these options is large enough to eliminate power shortages in these two states in the near term and to reduce the medium-term expansion needs of the State Electricity Boards (SEBs). This study also determined the critical role that the sugar industry could play in generating surplus power.

Responding to the increased attention to cogeneration and the newly identified scope and potential for bagasse-based cogeneration for power export to the grid, the Energy Sector Management Assistance Program (ESMAP) of the World Bank, UNDP, and bilaterals prepared a study in 1990 entitled *India: Maharashtra Bagasse Energy*

---

14 "Industrial Cogeneration In India", S. Padmanabhan, USAID/India EMCAT Project Paper, 1990

15 " Cogeneration - An exercise in a high synergy culture", R.D. Aga, Chairman and Managing Director, Thermax Ltd., August 1989

16 "Non-utility Power Generation in the Indian States of Gujarat and Maharashtra: Potential, Impediments, and Policy Issues", RCG/Hagler, Bailly Inc., June 1987

Efficiency Project. The ESMAP study analyzed the technical and financial potential for bagasse-based cogeneration in sugar factories that crush or planned to crush 3,500 TCD and above. At the time of the ESMAP study there were at least 13 sugar mills in Maharashtra that met this criterion.

The cogeneration potential of these mills was studied under an electricity maximization configuration (where system modernization results in exportable electricity only) and a bagasse maximization configuration (where system modernization results in exportable bagasse and lower levels of exportable power). The study determined that if all the 13 mills were to adopt the electricity maximization configuration, the total power exported to the grid could be 102 MW, with a total investment of Rs1,800 million ($105.8 million).[17] Under the bagasse maximization scenario (where four mills would maximize bagasse and not electricity) the total power export would drop to about 87 MW. The total investment requirement would be about Rs1,465 million (US $ 87 million). Each mill would require between $2-5 million.

The ESMAP study was a state-wide (Maharashtra) sector assessment of the cogeneration potential and included a project financing/investment plan that could result in a lending portfolio by the World Bank and other international and/or domestic lending agencies. It was not intended to serve as a detailed feasibility study leading to investments in individual cogeneration projects. Rather, it recognized that individual mills would have to undertake their own preinvestment study before they would qualify for loans from domestic and international financing institutions like the World Bank with its proposed line of credit under the Indian Industrial Energy Efficiency Project.

1.3.7 Major Obstacles to Commercial Cogeneration

The ESMAP study and other studies recognize that the major obstacle to be overcome before cogeneration projects can take place is the lack of a power purchase price that would justify the level of capital investment necessary for a commercial cogeneration project. Other obstacles to private electricity sales through cogeneration are the absence of regulatory incentives for utilities to purchase private power; lack of institutional resources; lack of adequate mechanisms to ensure that the mill will be paid for purchased power by the utility; utility apprehensions regarding the reliability and availability of privately generated power, and, in the case of biomass cogeneration projects, the availability of off-season fuel sources that would be needed to justify capital expenditures.

---

[17] ESMAP Estimates, 1989

1.4 The Power Situation In Tamil Nadu and Maharashtra

1.4.1 Power Situation in Tamil Nadu

In Tamil Nadu, in addition to the Tamil Nadu Electricity Board (TNEB), there are two central power systems, the Neyvelli Lignite Corporation (NLC) and the Madras Atomic Power Station (MAPS) at Kappakkam.

The total generation capacity in Tamil Nadu, as of March 1991, was 4,089 MW of which 1,945 MW was generated by hydroelectric units and the rest from thermal and nuclear plants. A small capacity (14 MW) was met from wind farms.[18] The NLC owns and operates two thermal power stations of 600 MW (6x50, 3x100) and 630 MW (210x3) respectively. The MAPS system consists of two nuclear units of 235 MW capacity each. During the Eighth Plan (1992-97), Rs 35.2 billion ($1.17 billion) have been allocated to the TNEB for system expansion. The existing TNEB plan calls for the addition of 1,050 MW thermal, 16.25 MW hydro and 100 MW wind farms during the Eighth Plan.

The primary fuel for the thermal plants is coal or lignite, with oil used only as a backup fuel. However, a few of the new units to be commissioned in the Eighth Plan will utilize natural gas in gas turbines. These include the 120 MW Basin Bridge and the 300 MW P.P. Nallur gas turbine plants.

The total captive generation capacity which comprises both diesel sets and industrial cogeneration is 1,427 MW in 1991. Following the liberalization of private participation in the power sector, the Tamil Nadu Industrial Development Corporation is actively seeking private sector investment for the establishment of a 1,500 MW lignite-based unit in the state.

The average availability factor for the TNEB plants during 1990-1991 was 69.3%. The plant load factor (PLF) during that year for the TNEB plants averaged 58.3%. While this was higher than the All-India PLF of 53.8% in 1990-91, it was much lower than the availability factor of over 85% and PLF of over 75% of some of the private power utilities in the country.

Although the generation capacity in Tamil Nadu is growing, it still cannot keep pace with demand. For example, the system peak demand in 1995 is projected to be 5,800 MW and the total availability by that year to be 4,100 MW, leading to a deficit of 1,700 MW. This deficit in peak generation capacity is expected to widen further to 4,300 MW by the year 2000 AD.

---

18 " Tamil Nadu Electricity Board, Statistics at a glance", 1990-91

1.4.2 Power Situation in Maharashtra

In addition to the Maharashtra State Electricity Board (MSEB), there are three private utilities in Maharashtra. The Tata Electric Company generates electricity in Bombay and sells its power to MSEB and to a number of large industries. The Bombay Electricity Supply and Transport (BEST) and the Bombay Suburban Electricity Supply (BSES) purchase power from MSEB and TEC for distribution in and around Bombay. BSES, formerly a distribution company, is setting up a 500 MW thermal generating plant. In addition, the centrally-owned Nuclear Power Corporation (NPC) operates a nuclear plant at Tarapur, near Bombay.

The total installed generating capacity in Maharashtra, as of March 1992 was 9,400 MW; thermal plants supplied 6,963 MW, gas turbines supplied 672 MW, the nuclear plant supplied 190 MW, and hydroelectric plants supplied the remaining 1,579 MW. Of this, the MSEB owns and operates 7,591 MW of capacity which is comprised of 5,695 MW steam, 672 MW of gas turbines and 1,294 MW of hydro. (See Table 1.2). The Tata Electric Company owns and operates about 1,338 MW of thermal capacity and 285 MW of hydroelectric capacity.

The availability factor of MSEB thermal units varies between 30% and 80% with an average of 67%. During 1990-91, the plant load factor (PLF) was 53%. In contrast the availability of the Tata Electric Company plants is between 75% and 98%, with an average of 86% and the average PLF is around 65%.

Power shortages in Maharashtra have been virtually nonexistent for several years, making it perhaps the only region in the country free of blackouts. However restrictions on peak demand have continued for certain categories of consumers.

1.4.3 Cogeneration in Tamil Nadu and Maharashtra

To relieve the power shortage, the TNEB has taken a number of steps to encourage cogeneration and captive power generation. The TNEB has evolved a scheme called " Power Feed Scheme," which permits cogenerators and private power producers of 2 MW capacity and greater to sell surplus power to the grid[19]. TNEB will purchase power from cogeneration units, mini/micro hydroelectric stations, windfarms or diesel/gas turbine units.

The power purchase rate, Rs1.00 per unit during 1990-91, but subject to yearly review, is based on the highest fuel cost of stabilized thermal generation of the board or the incremental cost of generation of the industry , whichever is less. This formula has

---

[19] TNEB, Notification dated December 12, 1988

been the subject of intense debate between the TNEB and industry, since the price is generally regarded by the latter as too low to justify capital investment.

Since 1983 the TNEB has operated a "banking" scheme, whereby captive power generators (minimum 500 kVA) can replace grid power by their own captive units and be credited with the amount of grid power displaced. At a later time, during power cuts the user can withdraw an equivalent amount of energy.

The banking scheme did not involve paralleling of the consumer's captive generator with the TNEB grid. Thus it was not applicable to high tension consumers operating cogeneration systems such as the sugar industry. The regulations concerning banking were subsequently modified with the introduction of the "Power Feed Scheme." Under this scheme there is physical transfer of power from the industry to the grid. The Power Feed Scheme has a set of voltage conditions (e.g., up to 5 MW, 11 kV or 22 kV generation voltage, etc.) under which grid interfacing is permitted.

Notably the scheme allows for wheeling of power to sister or associated companies of the cogenerator/captive power generator. The grid imposes a wheeling charge, typically 15% of the energy wheeled. For example, a cogenerator can bank 100 units with the TNEB and take back for itself or a third party 85 units at another time.

More recently the MSEB has been viewing cogeneration as a viable strategy to meet future energy needs of the expanding industrial sector. The politically important sugar industry has been a special target of attention for promoting its own growth and diversification.

In a study[20] conducted by the Commissioner of Sugar, Government of Maharashtra the potential for exportable power to the grid from the states' sugar industries was estimated at 485 MW. This represents 6% of the installed generation capacity of the MSEB and would require an estimated investment of Rs8,300 million ($275 million) or a low $567 per kW . The study also observes that in the case of 36 new sugar mills being planned for 2,500 TCD capacity, the exportable power generating capacity will be 150 MW, with an investment of approximately Rs 1,440 million ($48 million) or $320 per kW.

In view of the estimated potential, the MSEB has been taking a series of regulatory and other measures to foster cogeneration in the State. Principally these include:

i. An offered price of Rs 1.20 per unit, with periodic revisions.

---

20 "Cogeneration by Sugar Industries in Maharashtra", Commissioner of Sugar, April 1992

ii. Economic incentives for sugar mills to develop integrated facilities, i.e., distilleries, by-product chemical plants etc., that could consume the additional power available through cogeneration.

iii. Policies that permit the sugar industry to utilize MSEB infrastructure for local distribution of power.

Unlike Tamil Nadu, the MSEB does not currently permit industrial cogenerators and captive power producers to wheel power through the system. Banking of power is permitted whereby any surplus energy exported by the cogenerator is banked with the MSEB and the same is adjusted against the energy drawn from MSEB from time to time. No credit is now provided for peak power sales, and companies are not penalized for withdrawing power at peak that was banked off-peak. The utility is about to introduce time-of-day meters that will allow differential valuation of power.

In conclusion, both Maharashtra and Tamil Nadu are interested in promoting commercial cogeneration projects, even though the need in both states is not the same. Each state has formulated a slightly different policy and tariff structure. Both states base these tariffs on energy charges and not capacity, since the respective industries have not succeeded in convincing the utilities that the power they can offer is firm and reliable. Nevertheless, the attitudes of both utilities is progressive and appears to be genuinely interested in showing flexibility in order to promote actual projects.

2.0 COGENERATION PROJECT DEVELOPMENT CASE STUDIES

2.1 Summary

Cogeneration case studies were carried out at two sugar factories in Tamil Nadu (Aruna Sugars and Thiru Arooran Sugars), and at one sugar factory in Maharashtra (VSSK).

Results of the case studies indicate that the maximum generated power during the crop season ranges from 23 MW at Thiru Arooran to 25 MW at VSSK and 40 MW at Aruna. During the off-season, the generated power is kept at the same level as during the season, except for scheduled shutdowns in order to ensure delivery of firm power to the utility.

At Aruna and at Thiru Arooran, in Tamil Nadu, lignite is available as a supplementary fuel during the off-season. The boilers will be sized to burn all the bagasse as it is produced, eliminating the cost of storing bagasse. At VSSK, in Maharashtra, where lignite or coal is unavailable locally, the boiler will be sized to burn all the bagasse that is produced plus whatever amount can be economically purchased and transported from neighboring factories, over a period of 200 days in-season and 100 days off-season. Storage of bagasse for off-season use will be a necessary operation at Maharashtra's sugar factories that cogenerate electricity for sale to the grid.

All three factories presently operate under conditions where excess bagasse causes significant operational problems of handling and storage, with no economic benefits as an energy source. Thus, steam consumption is as high as 50-55% on cane, as there is no economic justification to save steam or electricity. A comparative figure for Hawaii, where sale of electricity to the grid is an economic necessity, is around 40%. Potentials for steam savings at minimal capital costs exist in all three factories. In certain cases, a tradeoff between increased revenues from electricity sales and possible losses in sugar recovery exists.

Generally, the installation of a 63 ata high-pressure boiler together with a double-extraction turbogenerator is the optimum combination for implementing cogeneration in sugar factories. However, as the case studies show, each sugar factory, depending on its own set of circumstances, will require variations in designs to accommodate its power contract obligations, its existing equipment and its sugar as well as non-sugar operations. Optimum turbogenerator sizing and design is critical to accommodate power sales requirements, especially during the off-season, when power generation is limited by condensation capacity, and steam extraction is at a minimum. Offsetting, the limitation of condensation capacity for electricity generation during the off-season is generally reduced internal power consumption as sugar operations are shut down. In the case of

Previous Page Blank

VSSK, captive, non-sugar operations require steam and electricity, year-round. There is no single formula that applies to all cases. Detailed engineering analysis should be done on a case by case basis.

2.2 Technology Perspective

2.2.1 Cogeneration Systems in India

Over time there has been a progressive increase in the boiler steam pressures employed by sugar mills in India. Prior to the mid-seventies the average steam pressures were in the range of 10 to 15 ata which increased to the prevailing mill average of 21 ata. In the mid-eighties there was a trend in a few mills towards higher pressures in the range of 42 ata. The choice of going in for such high pressure systems is dependent on at least two significant issues; namely, level of confidence among mill managers and employees in operating and maintaining high pressure systems, and need to incorporate more advanced water treatment systems such as demineralizers.

Indian boiler manufacturers have today responded to the high pressure system needs of the sugar industry and are in a position to supply efficient and reliable steam generators at pressures 42 ata and beyond. The high superheat temperatures associated with these pressures necessitate alloy steels in the high temperature regions of the boiler, and these do not appear to be a problem in the country. Important associated issues that define the state of readiness of the indigenous boiler industry are its ability to offer systems that permit automatic combustion control, dual combustion (bagasse/lignite) without loss in efficiency or the need to derate boiler capacity, and finally efficient load following features.

The progress in the area of steam turbines, however, has been slower. The conventional turbine technology in the sugar industry has been back-pressure systems, in the range of 1 to 5 MW operating at low to medium steam throttle pressures. These turbines, usually single or multistage axial types, have poor conversion efficiencies, in the range of 55 to 65%. The average steam consumption per kWh in Indian mills is 10 to 12 kg/kWh as compared to 7 to 9 kg/kWh in Hawaii. With only two or three steam turbine manufacturers in the country the mills have to contend with long lead times for delivery, typically in excess of 18 months, and generally unsatisfactory levels of performance and service.

For the purpose of power maximization and flexibility in performance over a wider range of operational conditions, viz., steam to power ratios, the back pressure turbine is clearly unsuited. The extraction condensing turbine is more satisfactory for this purpose and can be operated during off-season periods with steam generated by surplus bagasse or lignite. The steam thus generated can be expanded through the condensing section of the turbine.

The governor of the back pressure turbine maintains the frequency of the system for a preset exhaust steam pressure. The steam flow through the back pressure turbine is

therefore not related to the process demand although it contributes in meeting it. The balance of the demand is met by passing steam through the pressure reducing stations, which maintains the pressure in the process steam headers. This system of control where the pressure relieving value (PRV) maintains the balance and the proportionality between the boiler output and the process steam demand, is common to all mills and results in at least 10% to 20% of the process steam passing through the PRV. In a typical mill of 2500 TCD capacity, this could translate to 1 to 2 MW of additional power that would have been generated if all the steam were allowed to expand across the steam turbine instead.

2.2.2 Sugar Mill Steam and Energy Economy

Potential for steam savings, and resulting increases in potential electric power output, exists in all three factories. The available data did not allow a site by site engineering study to quantify present steam usage for each of the major unit operations in the sugar factories. Material balances such as steam, juice and condensate flows, as well as temperatures need to be monitored. Due to the present lack of economic value of bagasse and steam, the factories are not equipped with adequate instrumentation to monitor material and energy balances for each unit operation. For this reason, the implementation of energy savings will require investments in engineering time and capital, which will vary from one case to another.

The first step in such an undertaking will be to install instrumentation to monitor, measure and control various process parameters. Without such data as references, potential improvements cannot be accurately determined. Furthermore, the implementation of steam savings will require management to make tradeoffs. For example, a lower imbibition rate on cane will result in less steam being used in the juice evaporator, but a lower mill extraction may result. Depending on the economics, management may decide to achieve more steam savings even at the expense of a slightly reduced sugar production.

Although steam consumption data were not available for the major unit operations, the factories did compile data on total steam consumption in kilos per tonne of cane. On average, steam consumption is approximately 550 kg per tonne of cane in each of the factories surveyed. This number can be compared to approximately 400 kg per tonne of cane achieved in some Hawaiian sugar factories. Based on this comparison, it is possible to make general, qualitative suggestions on what areas should be looked into for potential steam savings, although improvements cannot be quantified for each unit operation without performing detailed energy audits at each location.

The potential areas of steam and bagasse savings are classified as short-term, medium-term and long-term based on ease of implementation.

2.2.2.1 Steam Economy -- Short Term

An obvious contributor to high steam usage is the generally high bagasse moisture at all three factories. In Hawaii, bagasse moistures are around 47%, compared to 51% at the three Indian sugar factories. Reduction in bagasse moisture can be achieved operationally through tighter mill settings and lower imbibition rates. Improved cane preparation with knives and shredders will also help. High rates of imbibition cause dilution of mixed juice which in turn increases the juice evaporation load, requiring more exhaust steam into the first effect of the evaporator. High bagasse moisture also results in a lowering of boiler efficiency and less steam being produced per tonne of bagasse. These facts are well known to all sugar technologists, but without any economic value being attached to bagasse and steam savings, plant management has no incentive to risk reducing mill extraction or crushing rate by trying to save steam or bagasse.

There is also potential for further steam economy at all three factories by increasing the number of evaporator effects from four to five. The use of vapor for heating the juice heaters and the vacuum pans can be optimized by maximizing the use of steam bled from the lower pressure evaporator effects, and minimizing the use of exhaust steam. The use of quintuple effect evaporators has become more common in Hawaii as a result of the growing importance of cogeneration.

Presently, the use of pressure reduction valves is widespread, resulting in no electricity produced when the steam expands. With the use of a double extraction condensing turbine, the use of pressure reduction valves will be minimized, resulting in more electricity being generated from pressure reduction of steam.

The use of automatic electronic control to optimize excess air in boiler operations should be considered as a means of increasing boiler efficiency.

2.2.2.2 Steam Economy -- Medium Term

There is a strong potential for reducing steam consumption through vacuum pan automation, which will reduce the amount of sugar melting and evaporation in the pans. Also the use of continuous vacuum pans should be considered.

Savings in electrical power will result from the use of automatic continuous centrifugals, and steam savings in the mill turbines can be achieved by the introduction of electronic control of cane feed at the milling tandem in order to reduce fluctuations in steam flows

The implementation of these measures will require considerable investments and would not be economically justifiable without a guarantee of fair electricity prices.

2.2.2.3 Steam Economy -- Long Term

The advisability of using bagasse dryers to reduce bagasse moisture with flue gases was discussed. While the idea may appear attractive in theory, practical experience in Hawaii has shown the potential for high maintenance costs and energy costs from parasitic power that is used to operate the dryer and accessory equipment[21]. The recovery of useful heat from the flue gases may be effected in a well-designed boiler system through the use of air preheaters, economizers and superheaters. As for reduction of bagasse moisture, it can be effectively accomplished by adjustments of mill settings and other mill management practices. While bagasse dryers may have some merit, there are many lower cost and simpler measures that can be undertaken before installing them. Besides using flue gas, solar drying may be attractive in the Indian context. In addition to bagasse drying, the use of mechanical vapor recompression to reduce steam consumption in the evaporator may be applicable in certain cases.

These measures will not only require considerable capital to implement, but the expected savings in steam and bagasse may be realized more cheaply and with less technological risks through other easier and less costly measures.

2.3 Methodology and Design Approach

Typical cogeneration systems fall into general categories, depending on the objectives they are designed to accomplish from the point of view of the mill operator. Most mills in India currently produce only the electric power and steam required internally for the operation of the mill. This permits the mill to operate independently of outside sources of fuel and electric power by firing its boilers with waste bagasse and passing steam first through back pressure turbines before satisfying the thermal requirements of the refining process. The scheme is appropriate where no attractive market exists for power that the mill might be able to export.

Sugar mills produce enough bagasse, however, to meet the energy needs of the process and still have enough left over to generate electricity for sale, so where power markets are accessible, mills can contribute to power supplies in the regions where they are located. This generally entails investments in higher pressure boilers, condensing turbines, and efficiency improvements in the rest of the plant. The operator can choose to generate power only during the crushing season or to take advantage of what would otherwise be idle generation capacity by keeping the power plant in operation during the remainder of the year. If he elects to generate power year-round, he will probably need to supplement his fuel supply with higher cost cane field trash, purchased bagasse or

---

[21]For a more thorough discussion of bagasse drying, see Charles M. Kinoshita, *Flue Gas Drying of Bagasse*, Hawaii Natural Energy Institute, HNEI 89-1003, 1989.

conventional fossil fuels. The power will be worth more to a utility, though, if it sees the mill as representing reliable firm capacity.

In the interest of maximizing the return to invested capital, the design options analyzed in the cases presented below provide for year-round power generation. In all instances, the mills require supplemental fuel during the off-season. The assumption is that the two located in Tamil Nadu would avail themselves of accessible lignite, while the one in Maharashtra would purchase, transport and store surplus bagasse from neighboring factories.

Technical analyses of the three sugar factories were conducted in order to obtain the necessary technical data for financial analysis. The results of a preliminary energy audit conducted by Thermax Ltd. were reviewed with mill and Thermax's engineers. The audit was based on heat balances that characterize normal operating conditions in the factories, together with their associated mass and energy flow charts.

For each factory, several design alternatives were developed based on a minimum, mid-level, and maximum investment option. The actual design alternatives were adapted to meet each factory's specific requirements and its own operating environment in order to meet its internal demand for steam and power and to maximize net exportable power. For each alternative, the gross and net exportable power potential was calculated based on available fuels during the season and the off-season, and on steam and energy efficiencies. These options are referred to as "System Options" and identified as Option 1 through 3 in the report.

While in the process of defining the system options it was apparent that capital availability would be a major factor dictating the nature of the chosen option. In view of the relatively high cost of capital it was considered advisable to investigate options that would further optimize the use of capital. This would, in a typical case, require the installation of marginally higher capacities and usage of secondary fuel to supplement bagasse even during the season. It was felt that the incremental additional cost of these options, identified as Options 4 through 7 in the report, would result in greater benefits by way of larger and stable levels of exportable power.

Technical requirements of interconnection, and captive usage of electricity for non-sugar operations were discussed with mill managers and the utility companies. The determination of actual costs of equipment and erection of a power plant, including interconnection costs were developed in consultation with design engineering firms and vendors in India and the U.S.

Current operating and maintenance practices were discussed with plant management. The changes in such practices that would be required to maximize cogeneration and sale of electricity were presented to the plant managers for their consideration. Technologies not currently in use in India, such as bagasse drying were also discussed.

2.3.1 Base Case Conditions

At each mill, a base case has been developed as the benchmark for comparison purposes. The base case takes into account the current equipment and conditions under which the steam, power and bagasse are produced and utilized and the immediate expansion plans of the mill. Details for the mills are provided in the individual case studies later in this chapter. A summary of pertinent operating conditions in the mills is provided below:

- Cane crushing for the three mills averaged 220 days per season.
- The mechanical downtime of the mills per milling season has been found to average 15.09%.
- Steam is generally produced at low to medium pressures: 14 kg/cm^2, 265°C; 21 kg/cm^2, 340°C; 32 kg/cm^2, 380°C.
- The boiler fuel is mill bagasse, the fibrous residue of the cane milling process. Bagasse has a moisture content of 50% - 51%, which results in high boiler flue gas losses.
- Process steam consumption averages 550 kg per tonne of cane crushed.
- Fiber content of the cane averages 14.46% on cane. This is equivalent to a bagasse % cane of 31.19%. This quality of bagasse marginally meets the requirements of the boiler fuel to supply process steam needed at the rate of 55% on cane.
- Electrical energy requirements of the three mills average between 18 kWh and 21 kWh per tonne of cane crushed.
- In addition to generating for its own requirements, the mill has to generate and supply the demands of its maintenance shops, offices and township.

2.3.2 Cogeneration System Options

For comparison with the base case, seven boiler/turbine retrofit options have been examined for each of the three mills considered in the study. The two main elements that are common to all these options are:

i. Dual-Fired High Pressure Boilers of 63 ata & 480°C

ii. Topping Turbo Alternator with:

Inlet Steam @ 63 ata & 480°C
1st extraction @ 42/21/15 ata
2nd extraction @ 2 ata
condenser @ 0.15 ata

The high pressure boiler is dual fired, operating on either bagasse or lignite. The boiler raises the total enthalpy of steam to a level high enough to make the installation of a topping turbo -- alternator feasible. The electrical power is generated from the

expansion of total factory steam from the higher pressure to the lower process pressure. The drop in enthalpy from 63 ata to 21 ata or 14 ata provides the energy for conversion into electrical energy in the turboalternator. Since the total enthalpy of steam at the higher pressure of 63 ata is greater than that at 21 ata, the fuel required may be slightly higher, if it is not reduced by the higher efficiency of the new boiler over the existing low pressure one.

The alternator is driven by a double extraction condensing turbine which exhausts steam at the medium pressure header (42/21/15 ata) and at the lower process pressure of 2 ata. The balance of steam not needed by the mill passes through to the condenser.

The remainder of this chapter focuses on the case studies at Aruna, Thiru Arooran and at VSSK. Appendix A.1, A.2 and A.3 provide the salient technical, operational and investment costs of the various system options at the three mills.

2.4 Case Study A: Aruna Sugars & Enterprises Ltd.

2.4.1 Introduction

Aruna's sugar factory is located at Pennadam R.S., in South Arcot district, Tamil Nadu. It is privately owned, progressive and enthusiastic in expansion and diversification. Its professional management has the capability to undertake new projects such as a cogeneration project, and should have no difficulty in recruiting skilled personnel.

Table 2.1 summarizes Aruna's production characteristics. The plant's present milling capacity of 5,000 tonnes of cane per day will be increased to 6,000 tonnes per day in 1992-1993. Aruna has processed an average of 707,671 tonnes of cane during the last three seasons. Fiber % cane, at 14.26, is high, resulting in the production of an average of 224,326 tonnes of bagasse annually. A small amount of bagasse, approximately 13,334 tonnes per year is sold to pulp manufacturers, and the rest is burned in the factory's boilers to produce steam and electricity for use by the factory. The duration of the crop is approximately 205 days per year with the balance of 160 days being the off-season. The proposed cogeneration plant will operate during the season and the off-season except for the annual shutdown of 30 days to allow for inspection and maintenance.

Tamil Nadu's southern region, where Aruna Sugars is located, has a permanent deficit of electrical power. Presently, Aruna Sugars produces no power during the off-season and there is no power available for sale to the utility at any time during the year. The proximity of Neyvelli, where the Tamil Nadu State's lignite deposits are located and Pennadam where the Aruna Sugars factory is located, raises the possibility of using lignite as a supplementary fuel to bagasse. Hence any scheme for power generation by Aruna would have a ready market for electricity and a reliable supply of bagasse and lignite as fuel.

TABLE 2.1: PRODUCTION DATA OF ARUNA SUGARS & ENTERPRISES LTD.

Milling Capacity, tonnes cane per day	5,000
Cane crushed, tonnes per year	707,671
Crop duration , days	205
Average crushing rate, tonnes cane per day	4,234
Downtime, % milling season	16.33
Pol % cane	11.46
Fiber % cane	14.62
Bagasse % cane	31.8
Moisture % bagasse	51.32
Bagasse produced, tonnes	224,326
Bagasse sold to pulp manufacturers, tonnes/year	13,334

Table 2.2 shows Aruna's installed boiler capacity. With the exception of one 70-tonnes per hour boiler operating at 32 ata and which was installed in 1988, all the four other boilers are of small capacity (20-40 tonnes per hour), old (installed in 1970 -1975) and operate at low pressure (14 ata). The boilers are equipped with air heaters and economizers, but do not possess any air pollution control device such as bag filters or electrostatic precipitators . Average steam consumption % cane is 56%.

TABLE 2.2: INSTALLED STEAM GENERATOR CHARACTERISTICS

Boiler #	1	2	3	4	5
Make	WIL	TEXMACO	TEXMACO	IJT	WIL
Capacity/tonnes/hr	20	40	40	35	70
Year of installation	1974	1975	1975	1970	1986
Type	w.tube	d.tube	d.tube	w.tube	w.tube
Pressure, ata	14	14	14	14	32
Temperature C	265	265	265	265	380

Table 2.3 shows the installed capacity of the turbogenerator set. Electricity is generated at 415 volts. The turbogenerator set has a total installed capacity of 7.25 MW of which the operating capacity is 6.25 MW. It consists of units with capacities of 1.0, 1.25, 2.0 and 3.0 MW respectively. The factory purchases approximately 70,810 kWh of energy from the grid per year.

TABLE 2.3: TURBOGENERATOR CHARACTERISTICS

TG #	1	2	3	4
Type	Impulse Turbine	Impulse single casing 6-stage	Impulse single-cyl. multi-stage axial flow	Impulse 3-stage
Make	Brown Boveri	Escher-Weyss	Triveni	Triveni
Year	1976	1965	1970	1989
Capacity, kW	1000	1250	2000	3000
Speed, RPM	7500	8000	7500	9000
Steam, Kg/kWh	12.5	13	15	9
Inlet Temp., C	260	260	265	380
Inlet pressure, ata	10.5	13	13	32
Exhaust press., ata	1	1	1	1

2.4.2 System Options

On the basis of the overall objective of this study to develop "bankable" bagasse cogeneration projects, the sizing of the boilers and turbogenerators is aimed at burning all the bagasse that is produced by the factory or that it is able to economically purchase and transport to its site. Fossil fuels such as lignite are burned only to the extent that the factory will be required to fulfill its obligations for firm power during the off-season when bagasse is unavailable. Thus, the same amount of generated power is maintained during the season and during the off-season.

2.4.2.1 The Base Case

The Base Case under study is the factory operating at the planned capacity of 6,000 tonnes of cane per day. The existing boiler and turbogenerator configuration does not all allow cogeneration of electricity beyond the requirements of the sugar factory. Thus, there is no net exportable power. Using the base case as reference, increases in gross power generation can be determined under the conditions of the cases under study. Steam flows under the Base Case are shown in Figure 2.1 and Figure 2.2 during season and off-season respectively.

Aruna Sugars & Enterprises, Ltd.
Existing - In Season

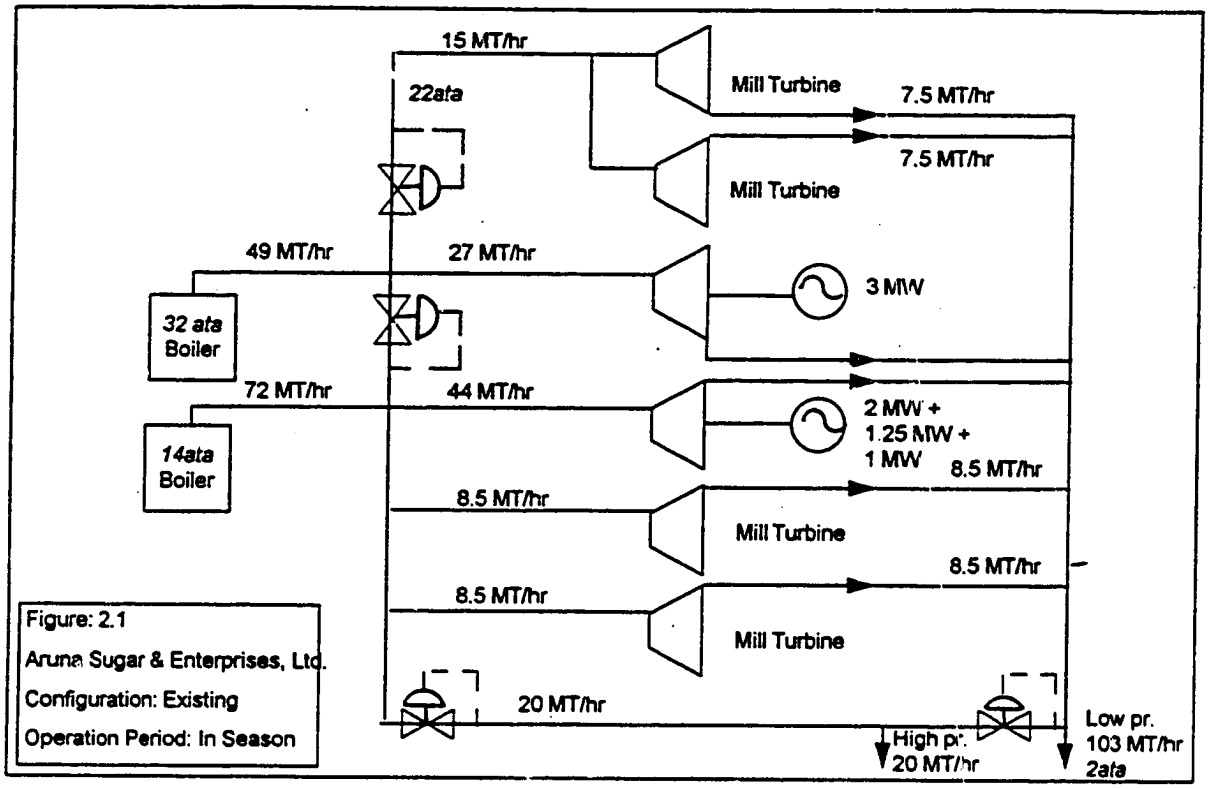

Aruna Sugars & Enterprises, Ltd.
Existing - Off Season

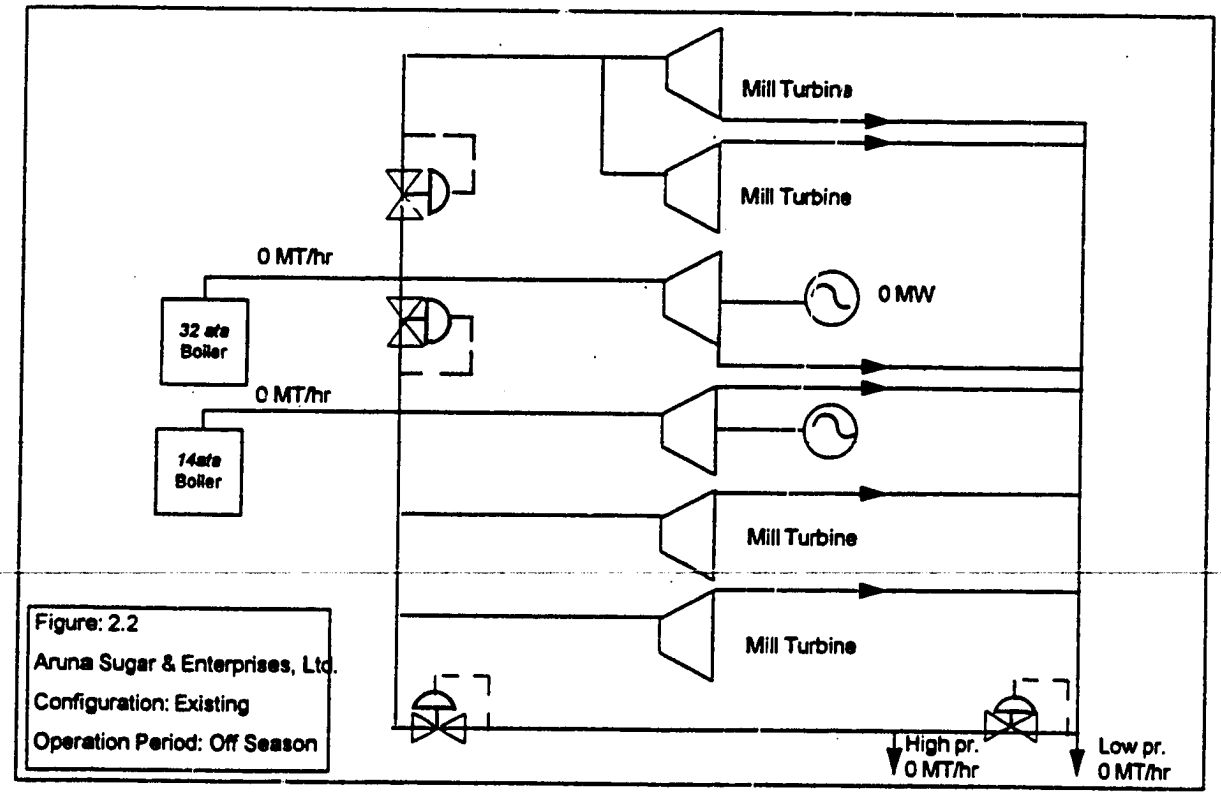

2.4.2.2 Option 1

In Option 1, a new boiler operating at 119 tonnes per hour, (or 2 x 60 TPH boilers) and 63 ata pressure is installed in addition to the existing, relatively new, 70 TPH, 32 ata boiler. This will effectively replace the four existing old boilers which have a total capacity of 135 TPH. The existing 32 ata boiler is operated at below capacity, generating approximately 42 TPH of steam. A new single extraction condensing turbine is also installed to extract 99 TPH of steam at 15 ata and to condense 20 TPH of steam during the season. The existing power turbines, operating at 32 ata and at 15 ata are retained. Approximately 27 TPH of steam from the existing 32 ata boiler are sent through an existing turbine rated at 3 MW. Additionally, 44 TPH of steam extracted at 15 ata from the new turbogenerator is passed through existing turbines with a total capacity of approximately 3.5 MW. The steam flows during the season is shown in Figure 2.3.

Aruna Sugars & Enterprises, Ltd.
Option 1 - In Season

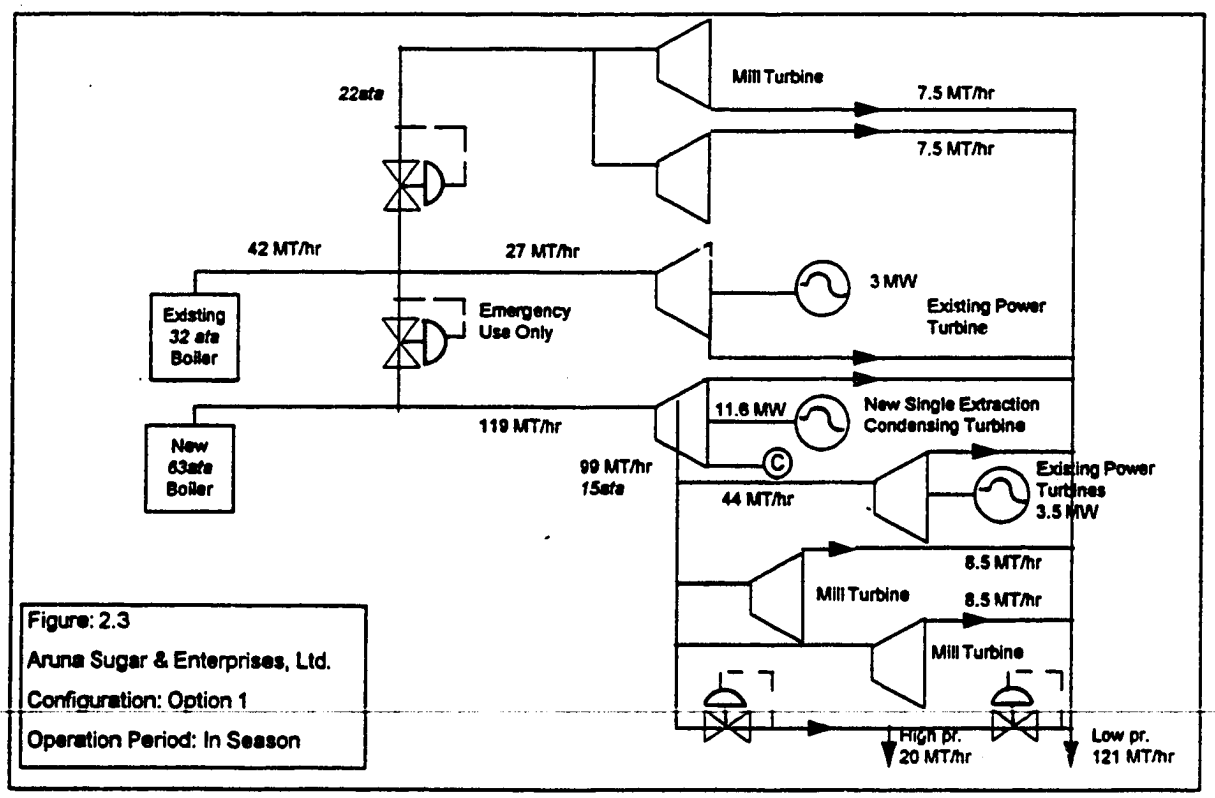

Figure: 2.3
Aruna Sugar & Enterprises, Ltd.
Configuration: Option 1
Operation Period: In Season

During the off-season, only the new 63 ata boiler is operated at 75 TPH by burning lignite. This steam is fully condensed in the new single extraction condensation turbine. Figure 2.4 shows the steam flow during the off-season.

Aruna Sugars & Enterprises, Ltd.
Option 1 - Off Season

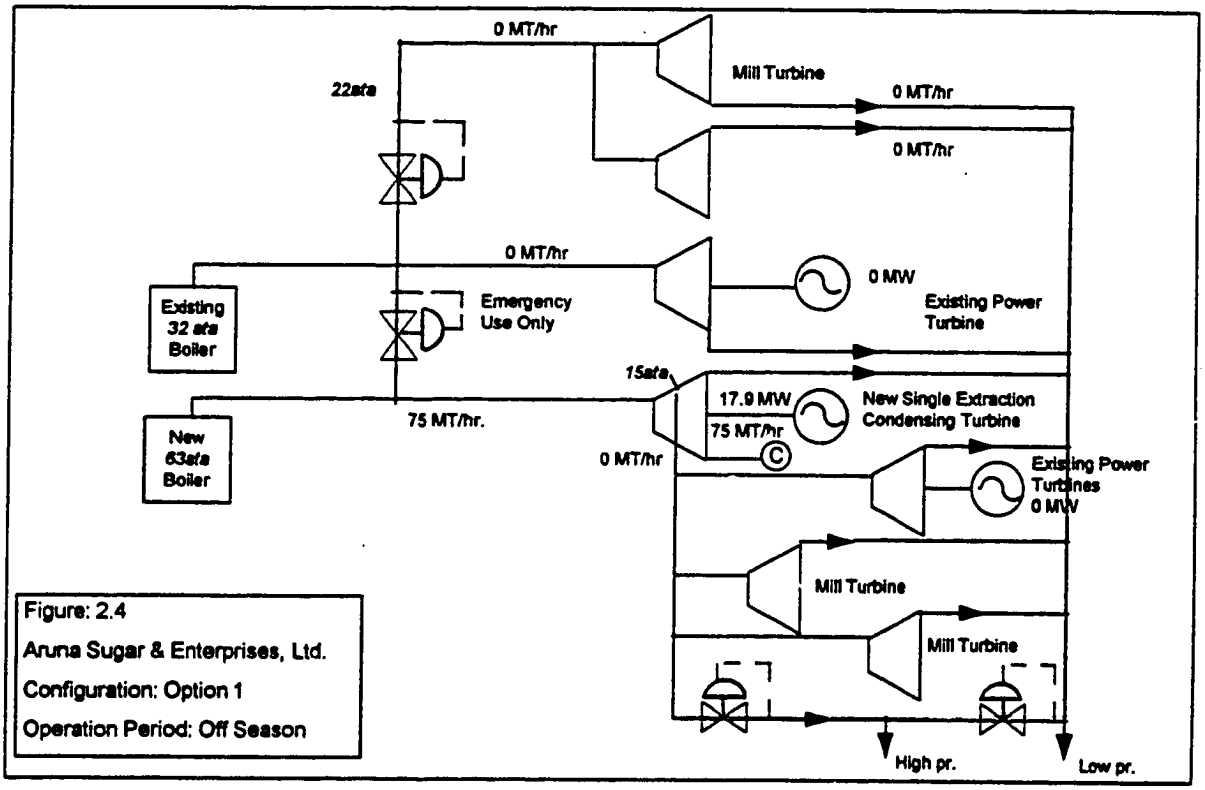

Figure: 2.4
Aruna Sugar & Enterprises, Ltd.
Configuration: Option 1
Operation Period: Off Season

2.4.2.3 Option 2

In Option 2, all existing boilers are removed, and replaced with a single unit operating at 179 TPH (or 3x60 TPH boilers), 63 ata unit. A double extraction condensation turbine is installed, extracting 98 TPH at 15 ata, 43 TPH at 2 ata and condensing 38 TPH of steam during the season. Of the 98 tonnes per hour of steam extracted at 15 ata, 44 TPH are sent through existing turbogenerators, rated at 3.5 MW. The steam flows during the season is shown in Figure 2.5.

Aruna Sugars & Enterprises, Ltd.
Option 2 - In Season

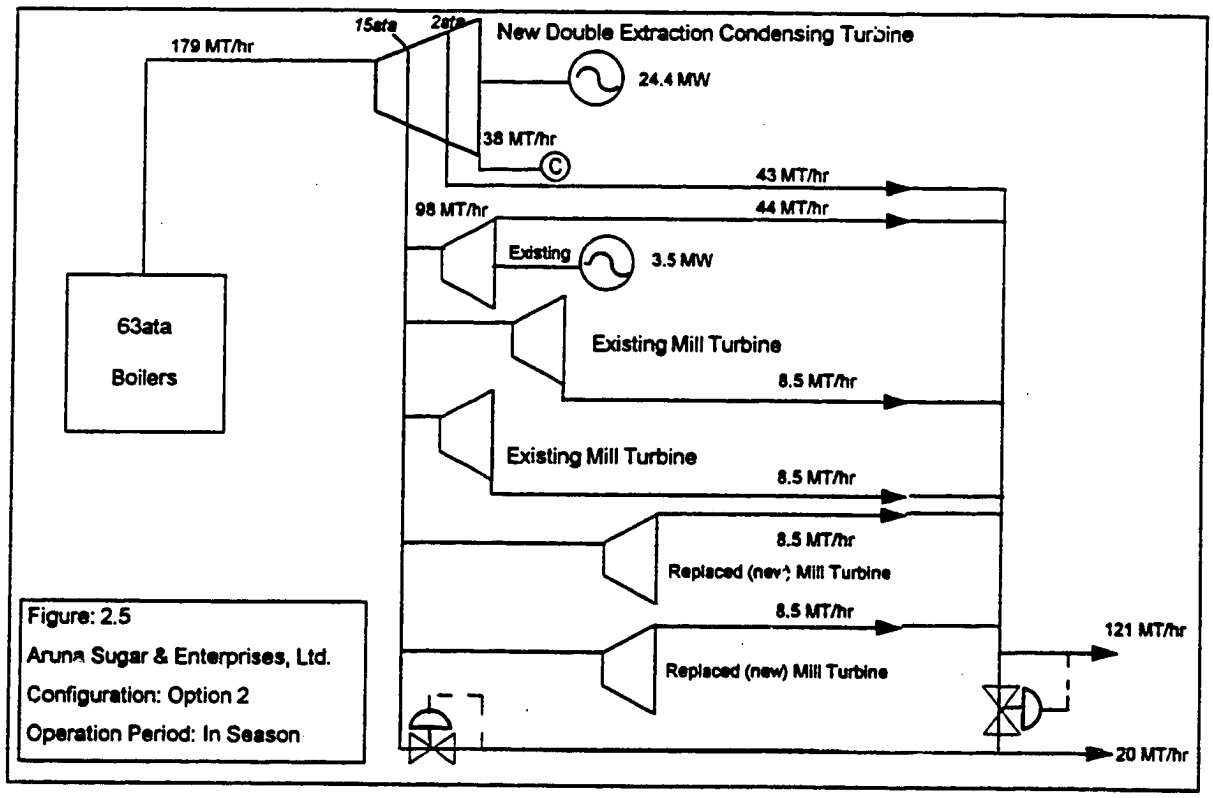

During the off-season, the 63 ata boiler is operated at 123 TPH by burning lignite, and all the steam is condensed in the double extraction condensation turbine. This is shown in Figure 2.6.

Aruna Sugars & Enterprises, Ltd.
Option 2 - Off Season

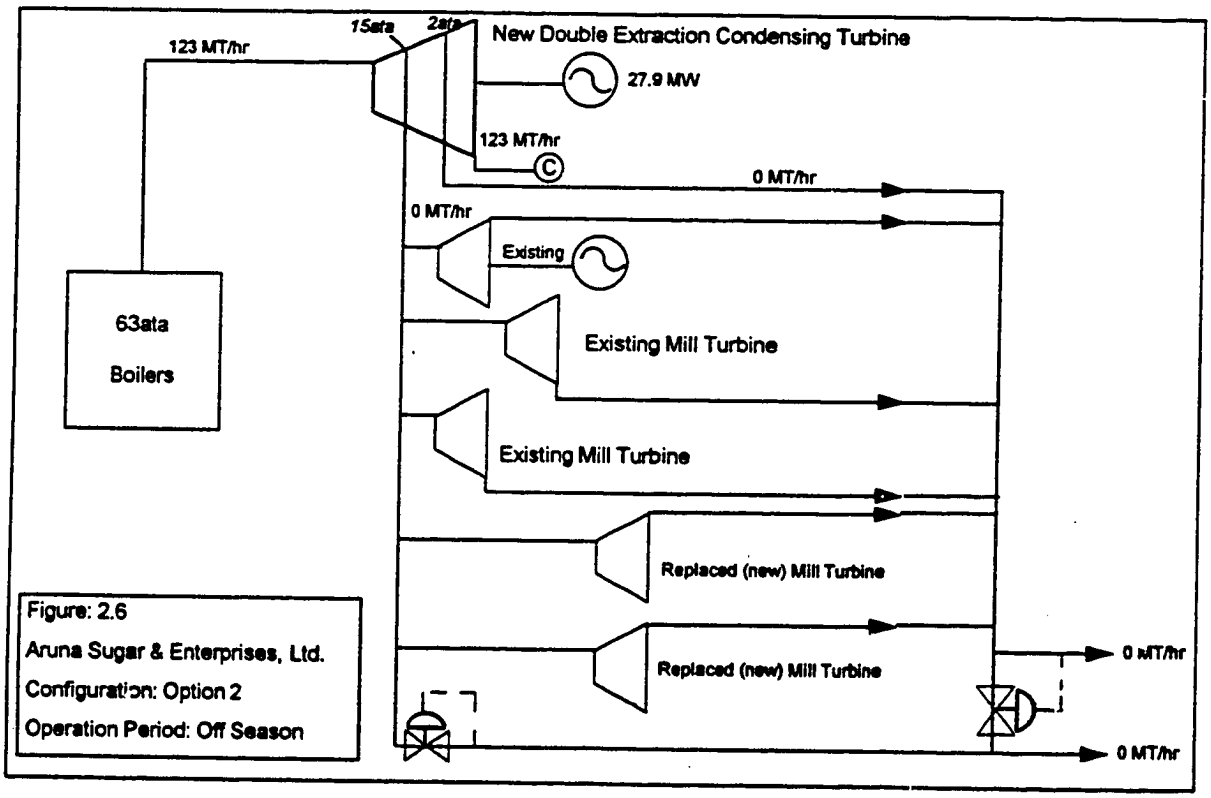

2.4.2.4 Option 3

Option 3 is similar to Option 2, except that process steam consumption is reduced from 550 kg per tonne of cane to 400 kg per tonne of cane. As in Option 2, 179 TPH of steam are generated, but the steam required for process is only 100 TPH instead of 141 TPH. There is an increase in the power steam condensation from 38 TPH in Option 2 to 79 TPH in Option 3. The steam flow during the season is shown in Figure 2.7.

Aruna Sugars & Enterprises, Ltd.
Option 3 - In Season

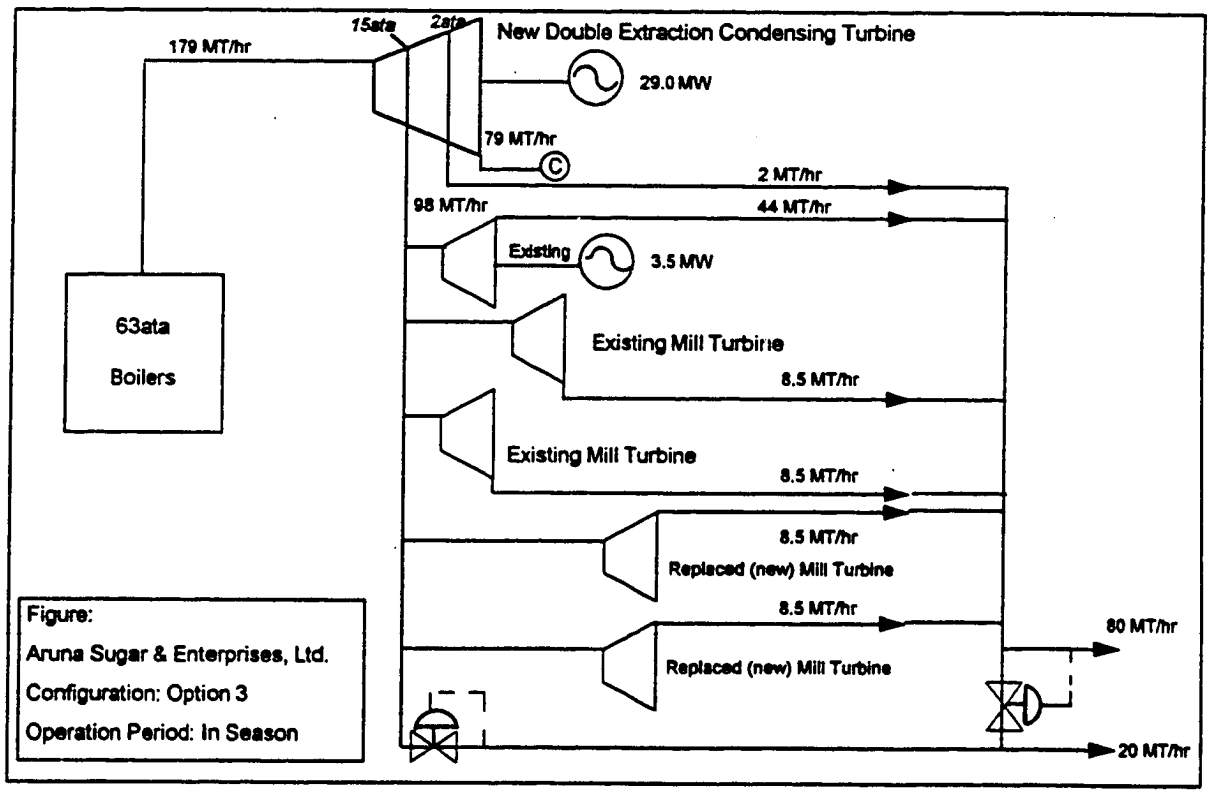

During the off-season, 1,140 tonnes of lignite are burned per day. The 143 TPH of steam generated is fully condensed in the double extraction condensation turbine so as to generate the same amount of power as in the season. The steam flow during the off-season is shown in Figure 2.8.

Aruna Sugars & Enterprises, Ltd.
Option 3 - Off Season

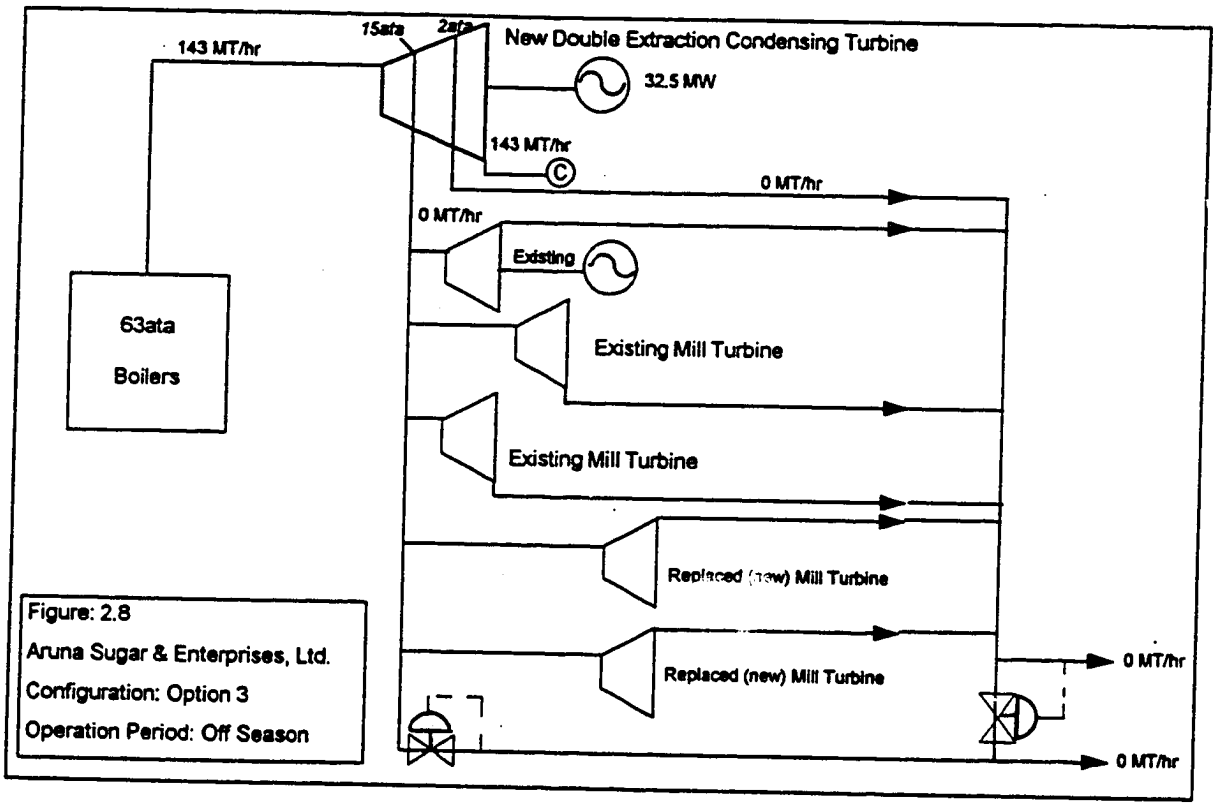

Option 1 requires the least investment of Rs530 million. Option 2 represents a higher investment at Rs675 million, and Option 3 at Rs 700 million requires the maximum investment. These cost estimates do not include the costs incurred in effecting steam economy by modifying the mills or making changes in the boiling house in Option 3, which will also require changes in operations to maximize bagasse and energy savings.

2.4.2.5 Option 4

This option envisages an installed steam generation capacity of 240 TPH split up as three boilers each of 80 TPH, 63 ata. This provides for one stand-by boiler always available to meet the full process requirement.[22] Further, this boiler may be operated during peak hours if the sale price offered for electricity is attractive. It is expected that the TNEB may be willing to pay a higher price for such peak capacities during the lean summer months following the end of the mill crushing season. The steam flow during the season and off season periods is shown in Figures 2.9 and 2.10 respectively.

The TG set and the condenser are sized to take the entire 240 TPH steam which may be generated during the off-season to produce around 53 MW of power. In season, the power generation would be lower at around 40.5 MW.

Aruna Sugars & Enterprises, Ltd.
Option 4 - In Season

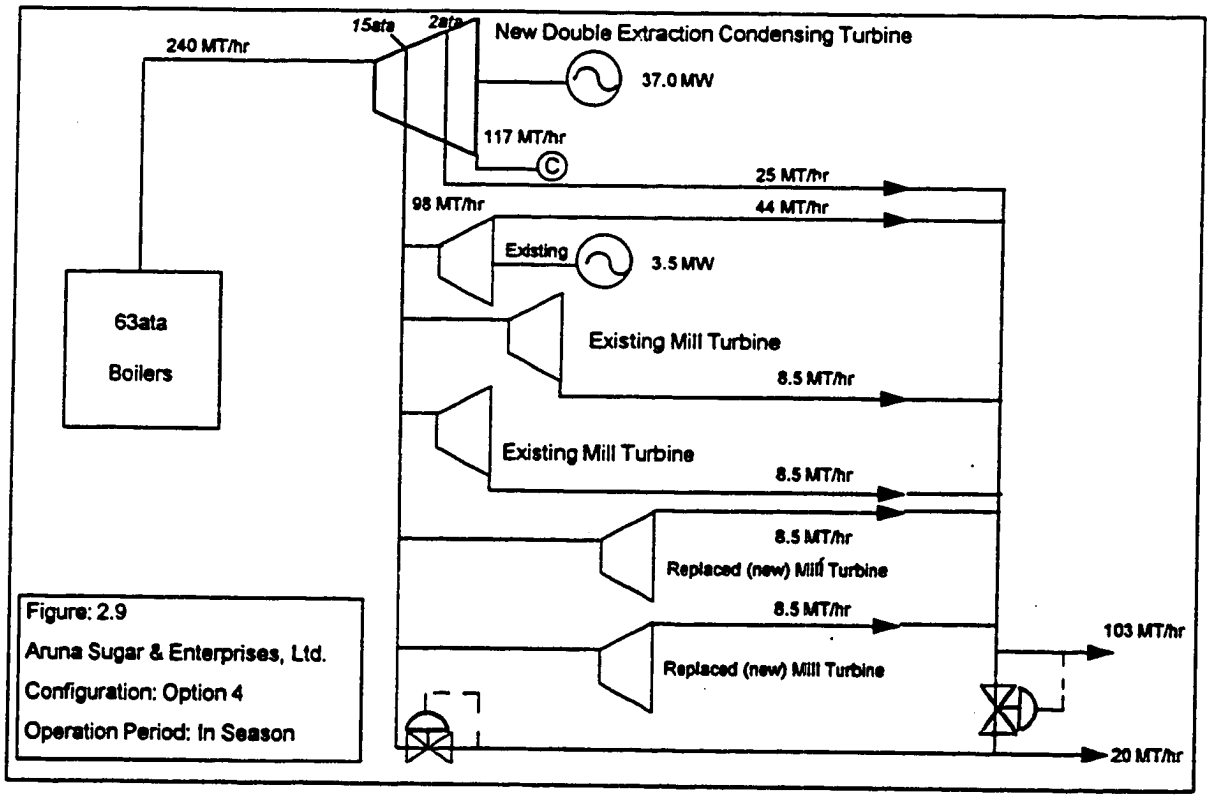

[22]During discussions with the sugar mills it was apparent, for availability reasons, that they preferred an additional stand-by boiler. However, since this is an expensive provision, it would be economic to operate the stand-by boiler for generation of more additional power. In the event of any one boiler failure, this additional power generation will be curtailed while still allowing the sugar plant to operate. Thus in Option 4 the third boiler of 80 TPH was suggested and the turbo-alternator sized for 240 TPH of steam.

Aruna Sugars & Enterprises, Ltd.
Option 4 - Off Season

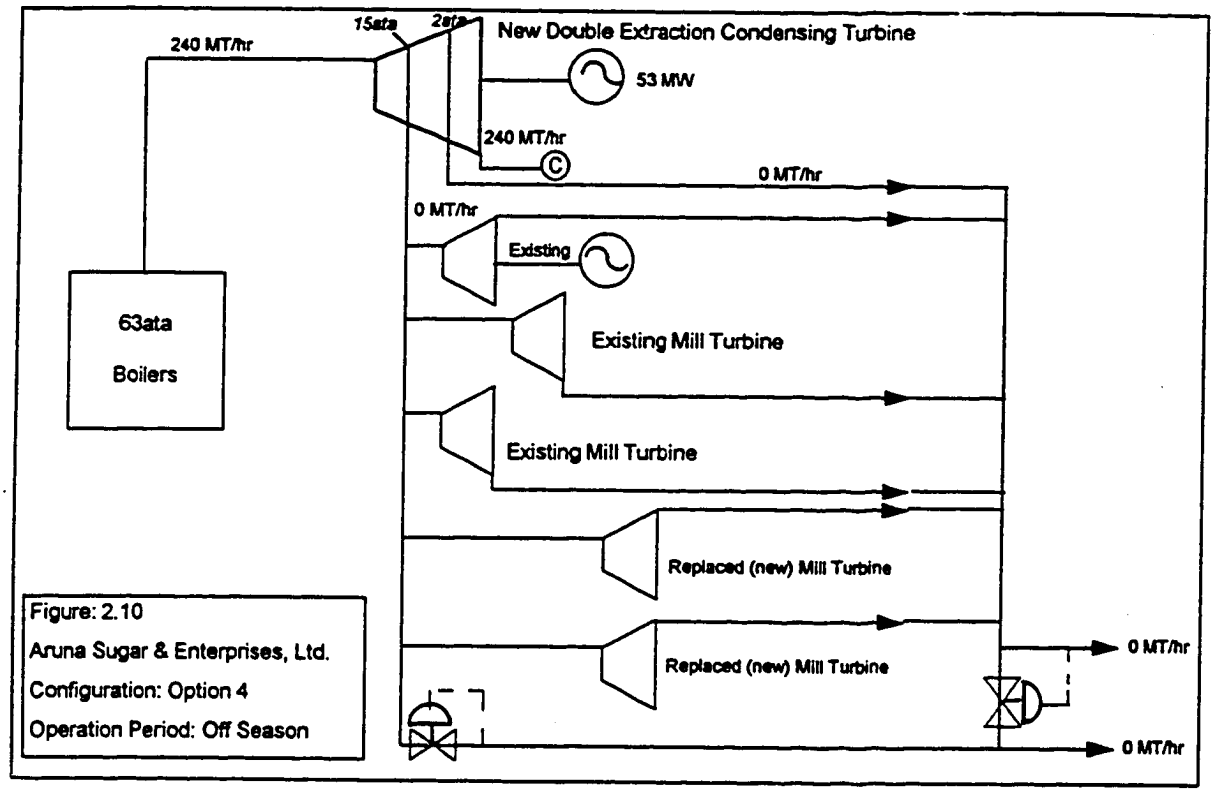

2.4.2.6 Option 5

The logic here is similar to that in Option 4. As in Option 4 three boilers of 80 TPH capacity, 63 ata each are proposed. The difference is in the sizing of the TG set and the condenser, which are smaller and sized for uniform composite power generation of 40.5 MW year around. Figures 2.11 and 2.12 depict the steam flows during season and off-season respectively.

Aruna Sugars & Enterprises, Ltd.
Option 5 - In Season

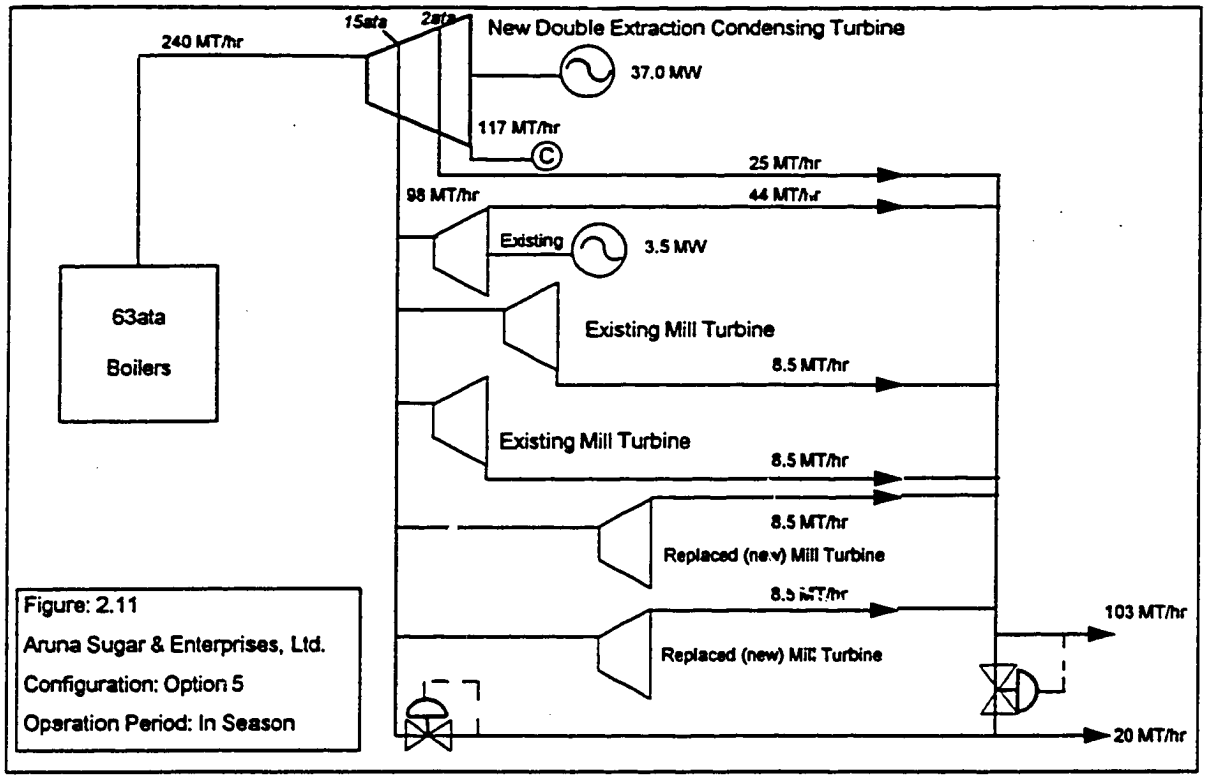

Figure: 2.11
Aruna Sugar & Enterprises, Ltd.
Configuration: Option 5
Operation Period: In Season

Aruna Sugars & Enterprises, Ltd.
Option 5 - Off Season

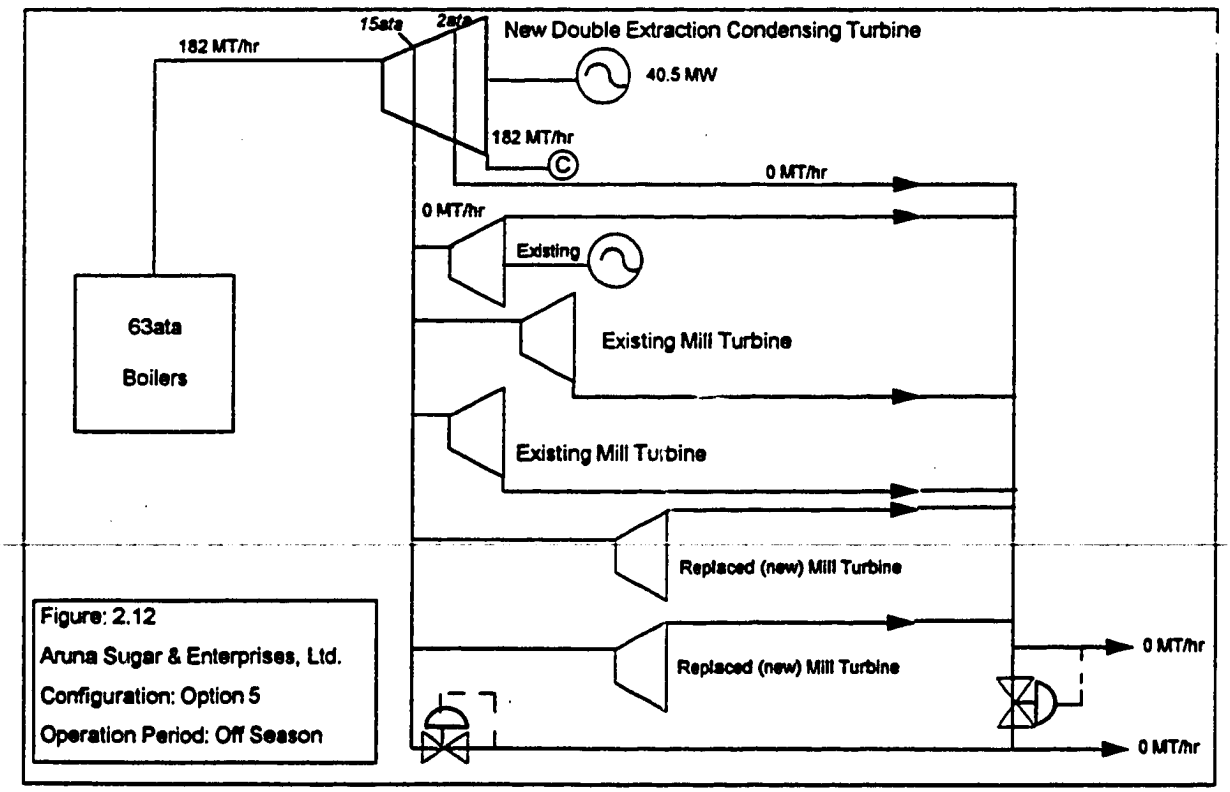

Figure: 2.12
Aruna Sugar & Enterprises, Ltd.
Configuration: Option 5
Operation Period: Off Season

2.4.2.7 Option 6

In this case the steam generation capacity at 184 TPH, 63 ata is pegged close to the process demand with the balance of 60 TPH passing through the condenser. Three boilers of 60 TPH, 63 ata is proposed. In the event of an unscheduled downtime of a boiler, the sugar mill may suffer some disruption in production. On the other hand if steam economy measures are implemented, then this option provides sufficient capacity to permit a single unit downtime without disruption. Figures 2.13 and 2.14 show the system configuration during season and off season respectively.

The TG set and the condenser are sized for uniform composite power generation of 28 MW throughout the year.

Aruna Sugars & Enterprises, Ltd.
Option 6 - In Season

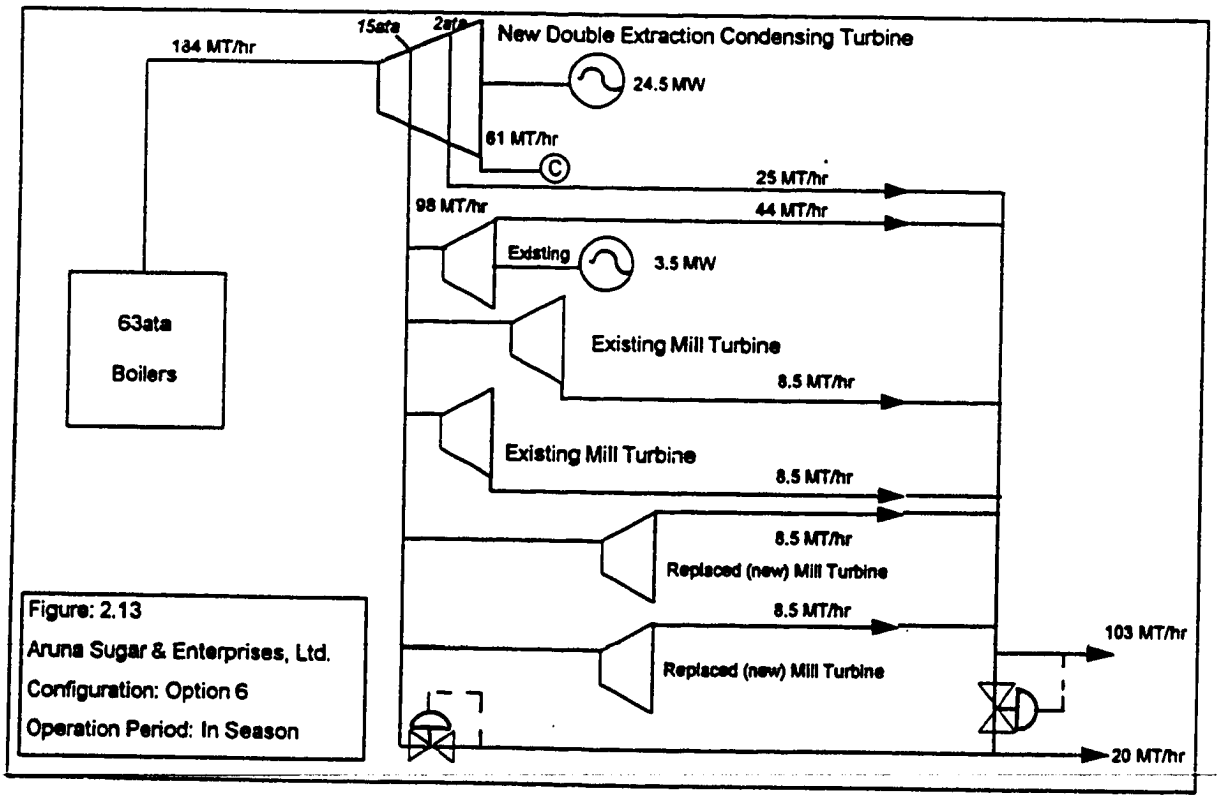

Figure: 2.13
Aruna Sugar & Enterprises, Ltd.
Configuration: Option 6
Operation Period: In Season

Aruna Sugars & Enterprises, Ltd.
Option 6 - Off Season

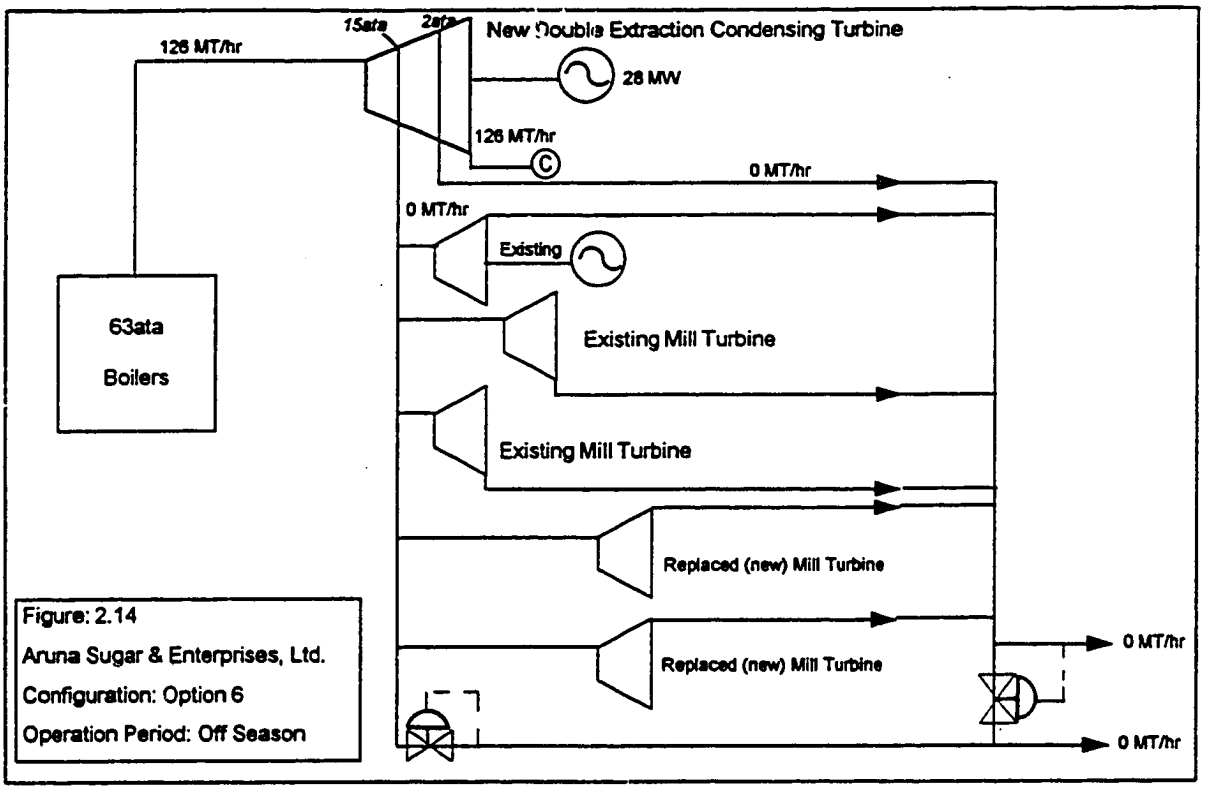

2.4.2.8 Option 7

This is a bagasse only option, where bagasse usage is conserved during the season and extended as long as possible during the off-season period. One boiler of 60 TPH, 63 ata and another of 80 TPH, 63 ata is proposed. The process steam requirement is met fully, and in the event of a boiler shutdown, the process will be operated at roughly half its capacity by running the remaining boiler. Figures 2.15 and 2.16 present the season and off-season cogeneration schemes respectively.

The TG set and the condenser are sized at the lower level of 17 MW year round uniform composite power generation.

Aruna Sugars & Enterprises, Ltd.
Option 7 - In Season

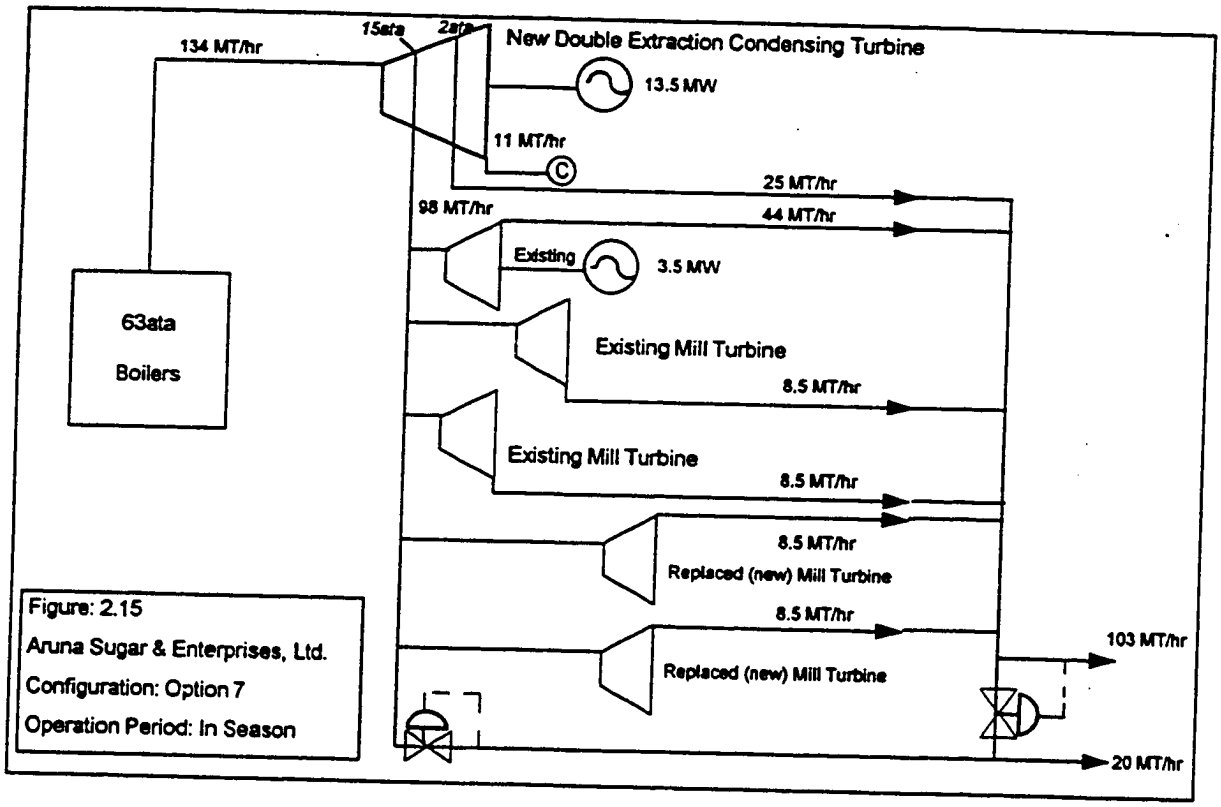

Figure: 2.15
Aruna Sugar & Enterprises, Ltd.
Configuration: Option 7
Operation Period: In Season

Aruna Sugars & Enterprises, Ltd.
Option 7 - Off Season

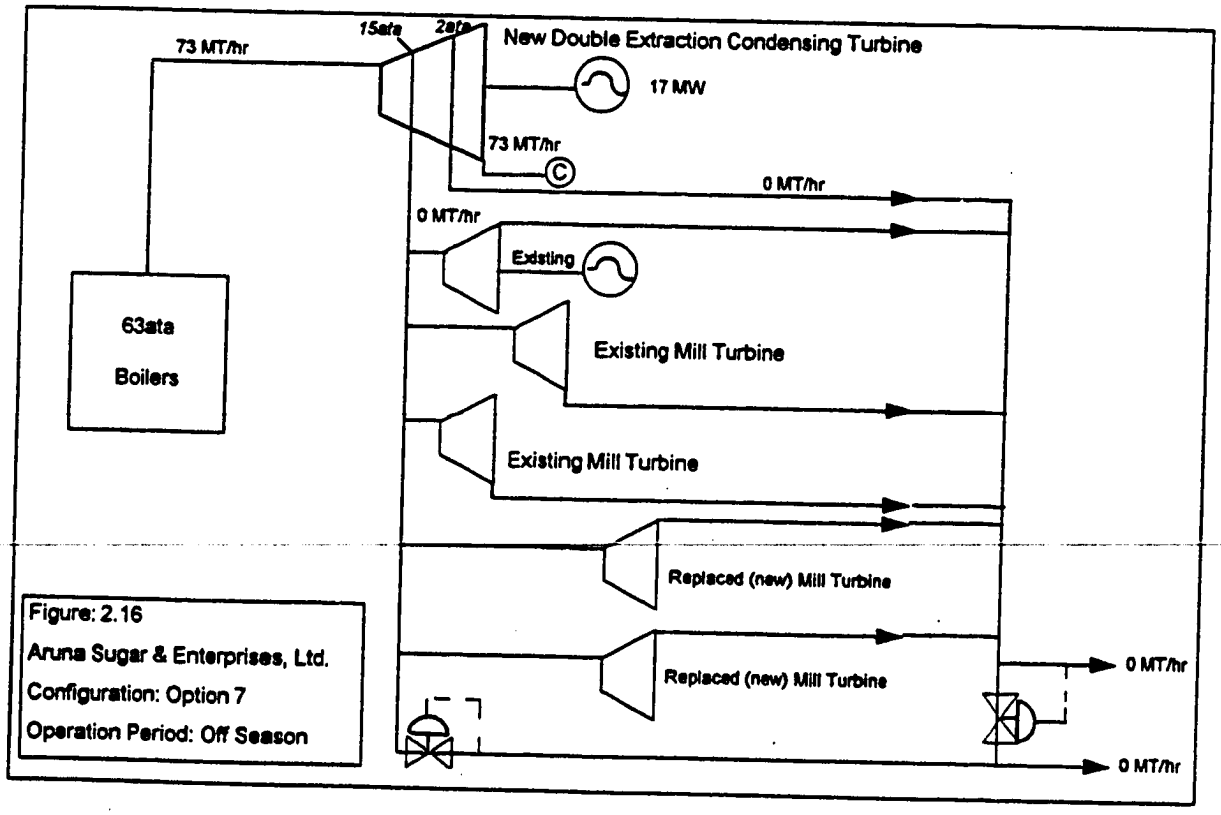

Figure: 2.16
Aruna Sugar & Enterprises, Ltd.
Configuration: Option 7
Operation Period: Off Season

2.4.3 Summary of System Options

The calculations of generated power for Options through 7, compared to the base case as reference, are shown in detail in Appendix A.1 . Table 2.4 presents a summary of the relevant data and results.

TABLE 2.4: ARUNA SUGARS POWER GENERATION AND EXPORT - SYSTEM OPTIONS

	Base Case	Option 1	Option 2	Option 3	Option 4	Option 5	Option 6	Option 7
Generated Power, MW								
Season	6.25	17.91	27.94	32.49	40.5	40.5	28.0	17.0
Off-Season	0	17.92	27.93	32.49	53.3	40.5	28.0	17.0
Net Exportable Power, MW								
Season	0	11.41	21.44	25.99	34.0	34.0	21.5	11.5
Off-Season	0	15.90	25.90	30.50	51.3	38.5	26.0	15.0
Energy Generated, MWh/Yr.								
Season	28,188	88,129	137,448	159,838	199,260	199,260	137,760	83,640
Off-Season	0	55,900	87,153	101,382	166,296	126,360	87,360	53,040
Total	28,188	144,029	224,601	261,220	365,556	325,620	225,120	157,728
Energy Exported MWh/Yr								
Season	0	56,149	105,468	127,858	167,280	167,280	105,780	56,580
Off-Season	0	49,660	80,913	95,142	160,056	120,120	81,120	46,800
Total	0	105,809	186,381	223,000	327,336	287,400	186,900	103,380
Fuel Consumed Tonnes/Yr								
Bagasse	369,540	391,140	391,140	391,140	391,140	391,140	391,140	391,140
Lignite	0	78,000	127,400	148,200	348,200	285,775	135,630	-
% Energy from Bagasse	100	77.1	69.7	66.4	45.7	50.6	68.3	100

2.5 Case Study B: Thiru Arooran Sugars Ltd.

2.5.1 Introduction

Thiru Arooran Sugars Ltd. is a private sector company located at Thirumandankudi, in Thanjavur district, Tamil Nadu. The present capacity of its factory is 2,500 tonnes per day. Management plans to increase this capacity to 3,500 tonnes per day in the 1992-1993 season, and eventually to 4,500 tonnes per day. Plans also exist to develop three new projects to produce (a) ethanol, (b) acetic acid and acetic anhydride, and (c) n-butanol. These projects will increase captive demand for electrical power, and the management perceives electricity cogeneration as an option to pursue to meet this future power requirement. As in the case of Aruna Sugars, the sugar factory is close to Neyveli from where lignite can be mined and transported at competitive costs.

Table 2.5 summarizes Thiru Arooran's production data. With a present milling capacity of 2,500 tonnes cane per day, Thiru Arooran crushes approximately 500 thousand tonnes of cane per year. The season lasts about 255 days per year. In 1991, the factory produced 155,268 tonnes of bagasse with a moisture content of 50-51%, of which 12,107 tonnes were sold to pulp manufacturers, and 2,575 tonnes were sold to other bagasse users. Fiber % cane at 14.5% is attractive for power production from bagasse.

TABLE 2.5: PRODUCTION DATA OF THIRU AROONAN SUGARS LTD.

Milling Capacity, tonnes cane per day	2,500
Cane crushed, tonnes per year	500,834
Crop duration , days	255
Average crushing rate, tonnes cane per day	1,957
Downtime, % milling season	9.52
Pol % cane	10.24
Fiber % cane	14.50
Bagasse % cane	31.00
Moisture % bagasse	50%
Begasse produced, tons	155,268
Bagasse sold to pulp manufacturers, tonnes/year	12,107
Bagasse sold to other users, tonnes/year	2,575

The boiler house at Thiru Arooran consists of a single KCP boiler with a capacity of 70 tonnes per hour. It is a water tube boiler and was installed in 1989. The operating pressure and temperature are 42.2 ata and 400°C. Process steam consumption % cane is 52.5 on average. The boiler is equipped with air heaters and an economizer. Air pollution control is effected by a multi-cyclone dust collector. Electricity is generated for factory use at 420 V. Installed capacity of the turbogenerator is 3 MW. The turbogenerator set consists of a single APF Bellis turbine installed in 1990. Inlet pressure is 42 kg/sq. cm and exhaust is at 1.5 Kg/sq. cm.

Presently , the factory does not produce any power for sale to the utility, and production operations are shut down during the off-season. Any future off-season operation is assumed to supply 2 MW of local consumption.

2.5.2 System Options

The design options described below provide for different levels of investment and power output. Options 1-3 correspond to mill capacity at the 3,500 TCD level and Options 4-7 assume the higher planned level of 4,500 TCD.

2.5.2.1 *The Base Case*

The Base Case is a departure from current reality, in that it assumes the sugar factory to operate at the planned eventual 4,500 tonnes per day capacity. The existing boiler obviously does not now have the indicated 94 MT/hr of capacity, and the 3MW turbogenerator set does not permit the generation of excess power for export to the utility. The Base Case is an abstract reference against which the various options are compared. The Base Case schematic of the steam flows is provided in Figures 2.17 and 2.18 for the season and off-season periods respectively.

Thiru Arooran Sugars, Ltd.
Base Case - In Season

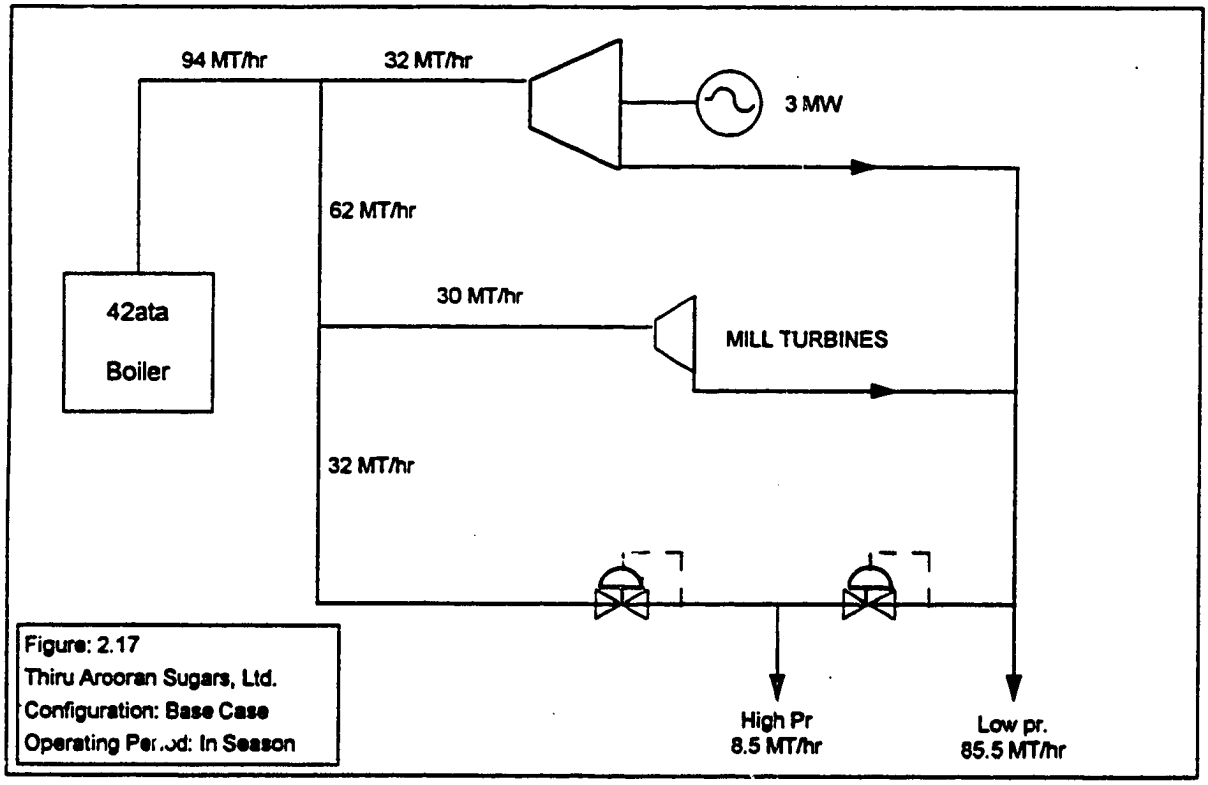

Figure: 2.17
Thiru Arooran Sugars, Ltd.
Configuration: Base Case
Operating Period: In Season

Thiru Arooran Sugars, Ltd.
Base Case - Off Season

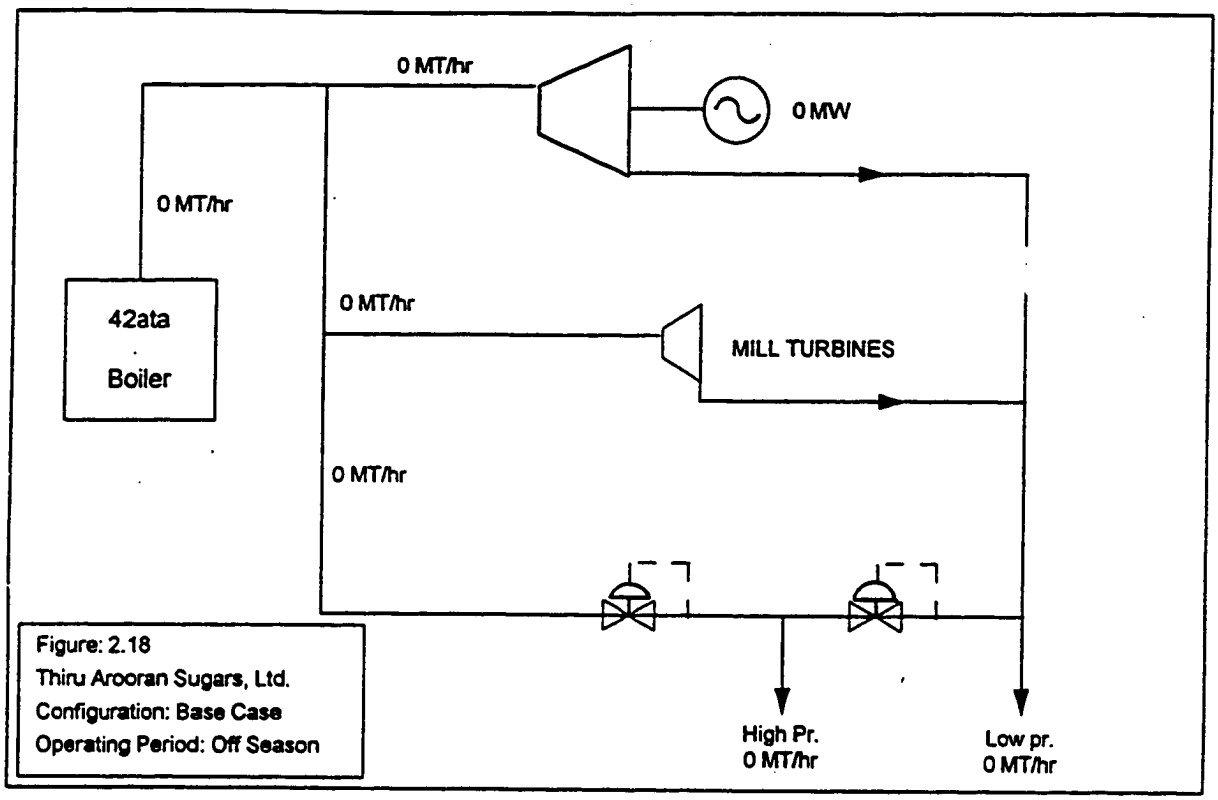

Figure: 2.18
Thiru Arooran Sugars, Ltd.
Configuration: Base Case
Operating Period: Off Season

2.5.2.2 Option 1

In Option 1, corresponding to 3,500 TCD, the existing boiler and turbogenerator is replaced with a 63 ata/480 °C, 102 TPH boiler (2x60 TPH), with a single extraction condensing turbine operating at 77 TPH exhaust at 42 ata, and 25 TPH of steam condensation during the season. During the off-season, 32 TPH of steam is generated and condensed in the turbogenerator. The steam flows during the season and the off-season are illustrated in Figures 2.19 and 2.20. Option 1 at a project cost of Rs350 million represents a low level of investment required for cogeneration.

Thiru Arooran Sugars, Ltd.
Option 1 - In Season

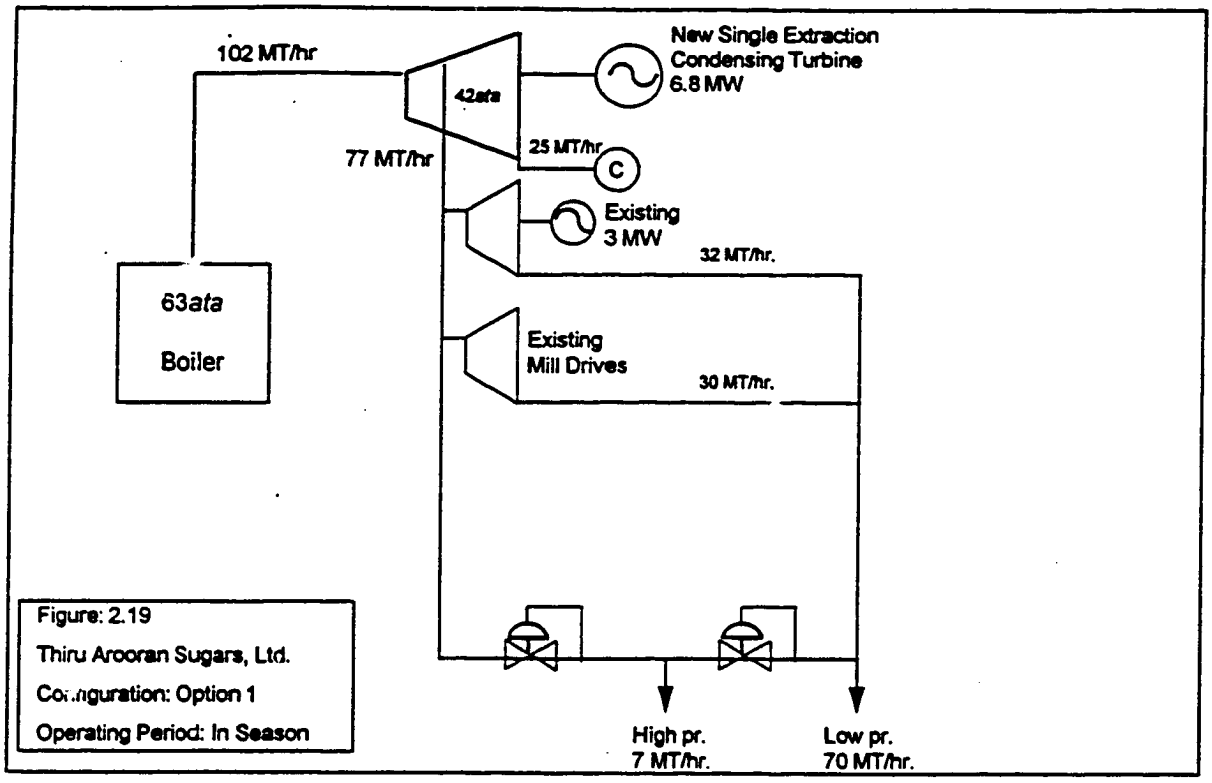

Figure: 2.19
Thiru Arooran Sugars, Ltd.
Configuration: Option 1
Operating Period: In Season

Thiru Arooran Sugars, Ltd.
Option 1 - Off Season

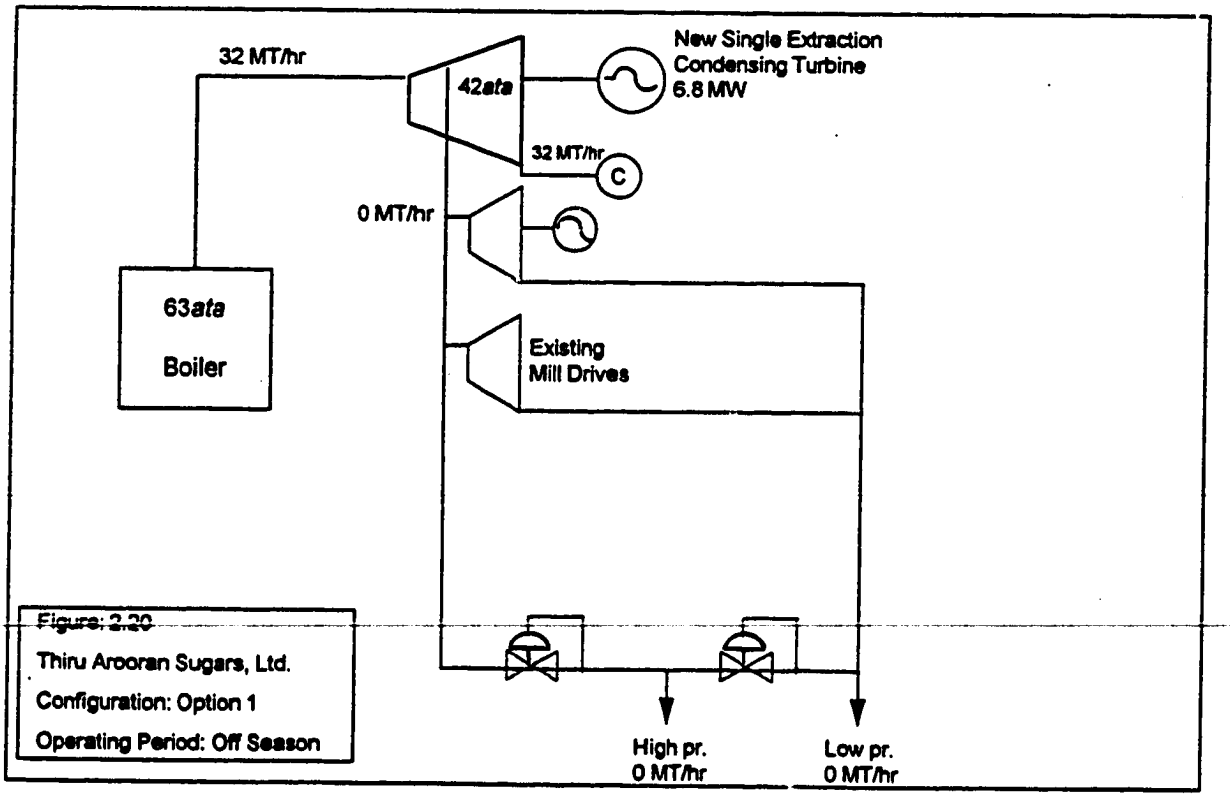

Figure: 2.20
Thiru Arooran Sugars, Ltd.
Configuration: Option 1
Operating Period: Off Season

2.5.2.3 *Option 2*

In Option 2, instead of the single extraction condensing turbine of Option 1, a double extraction condensing turbine is installed, extracting 70 TPH of steam at 42 ata, 7 TPH of steam per hour at 2.5 ata, and condensing 25 TPH at 0.14 ata. The steam flows are illustrated in Figures 2.21 and 2.22. Option 2 at Rs 400 million represents a medium level of investment for cogeneration.

Thiru Arooran Sugars, Ltd.
Option 2 - In Season

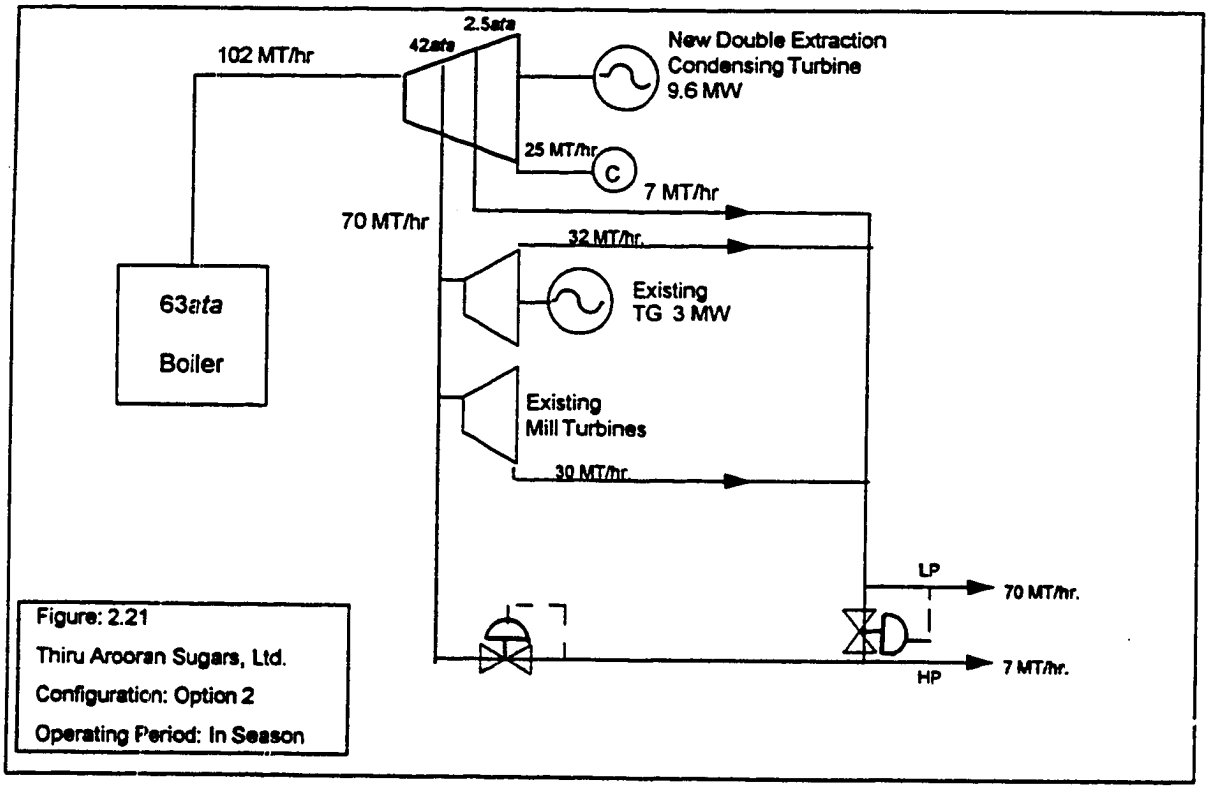

Figure: 2.21
Thiru Arooran Sugars, Ltd.
Configuration: Option 2
Operating Period: In Season

Thiru Arooran Sugars, Ltd.
Option 2 - Off Season

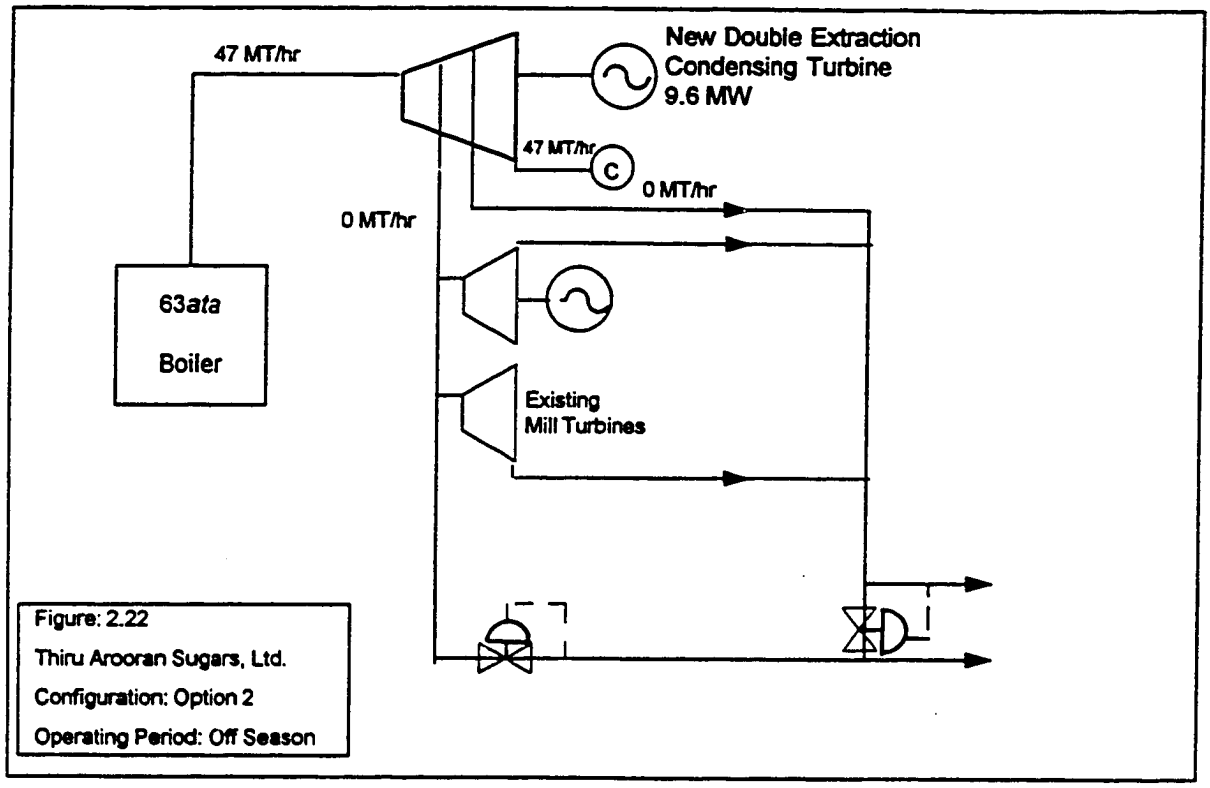

2.5.2.4 Option 3

Option 3 is similar to Option 2, except that steam consumption has been reduced from 525 to 400 kg per tonne of cane. Steam flows during the season and off-season are provided in Figures 2.23 and 2.24. Additional investments will be required in the sugar factory operations in order to achieve the desired steam economy.

Thiru Arooran Sugars, Ltd.
Option 3 - In Season

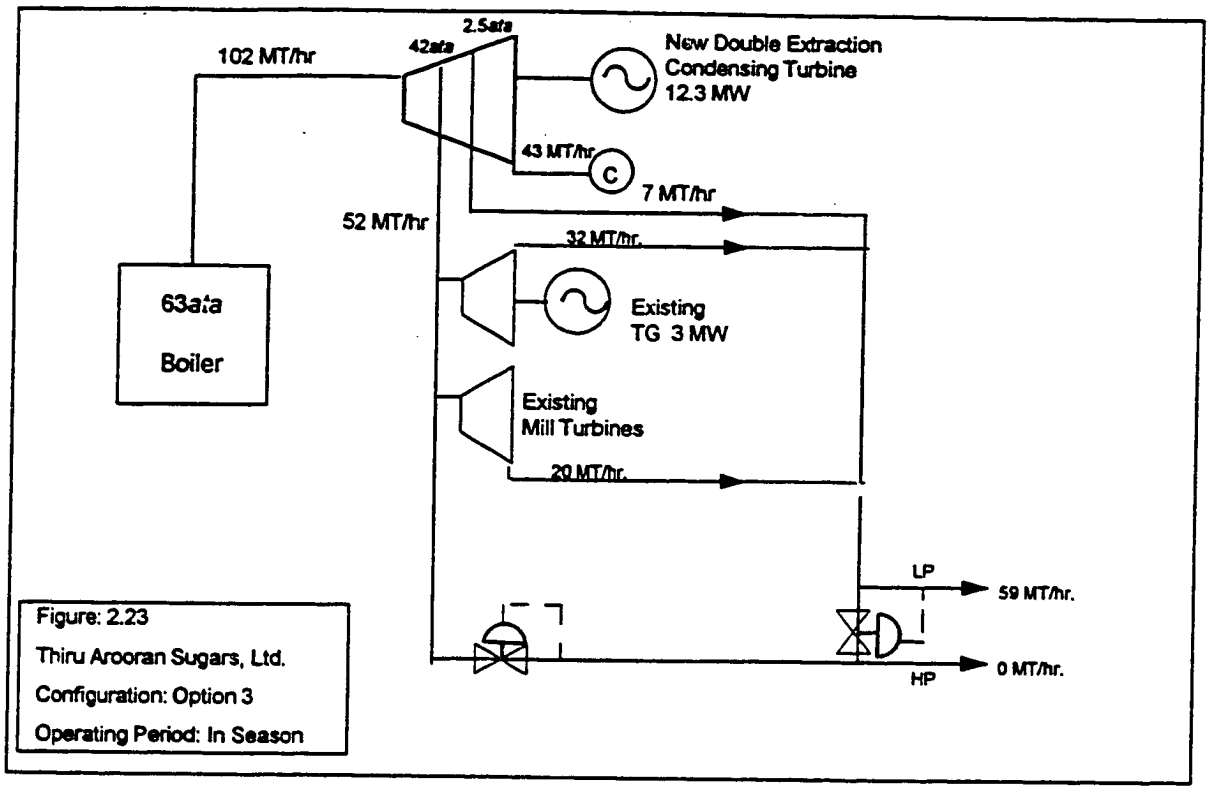

Figure: 2.23
Thiru Arooran Sugars, Ltd.
Configuration: Option 3
Operating Period: In Season

Thiru Arooran Sugars, Ltd.
Option 3 - Off Season

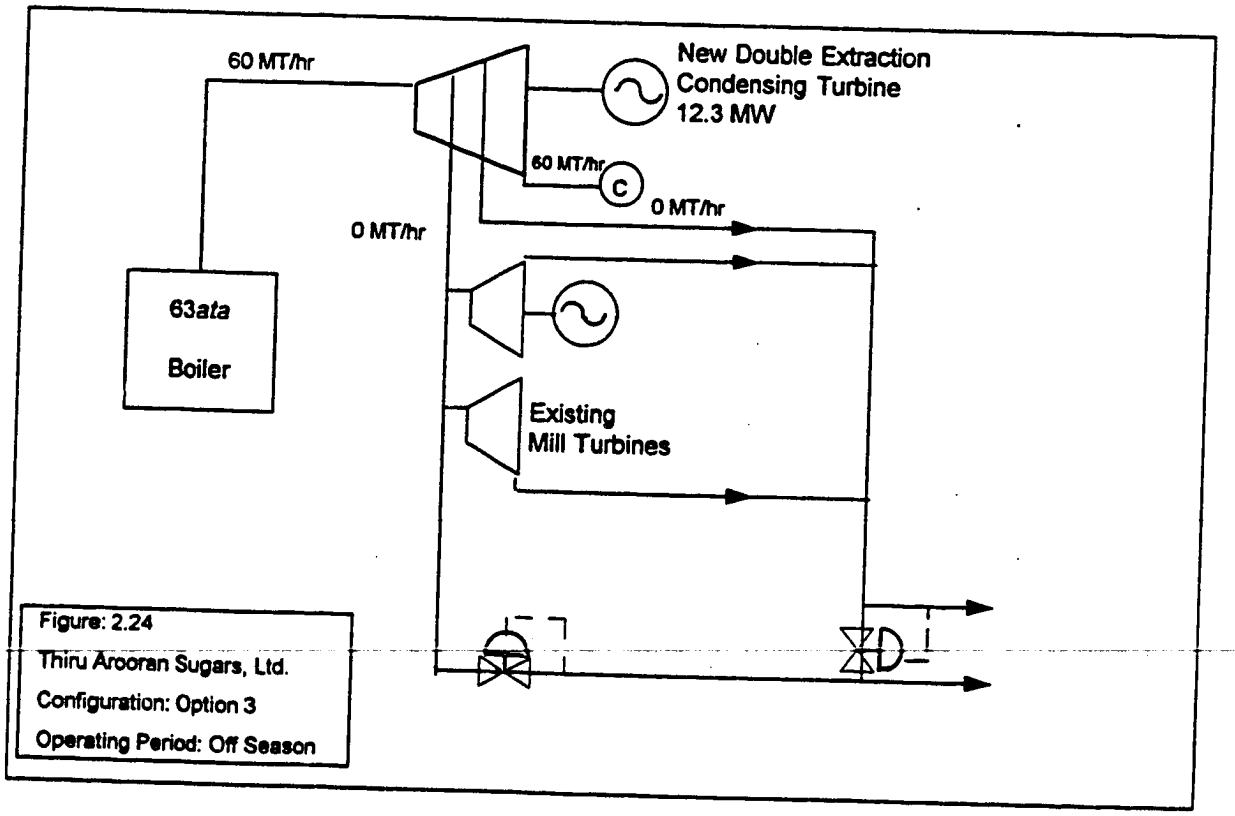

Figure: 2.24
Thiru Arooran Sugars, Ltd.
Configuration: Option 3
Operating Period: Off Season

As in the case studies for Aruna, the boiler and turbogenerator are sized to burn all the bagasse that is available during the season. During the off-season, lignite is burned only to the extent of maintaining the same level of power generation as in the season in order to ensure delivery of firm power to the utility for most of the year, except for scheduled shutdowns.

2.5.2.5 Option 4

In this scheme one boiler of 60 TPH and 63 ata and another at 80 TPH and 63 ata are proposed to meet the expanded process steam demand associated with 4,500 TCD. A single extraction condensing turbine extracts 94 TPH, 42 ata steam for process. Figures 2.25 and 2.26 illustrate steam flows during both seasons.

Thiru Arooran Sugars, Ltd.
Option 4 - In Season

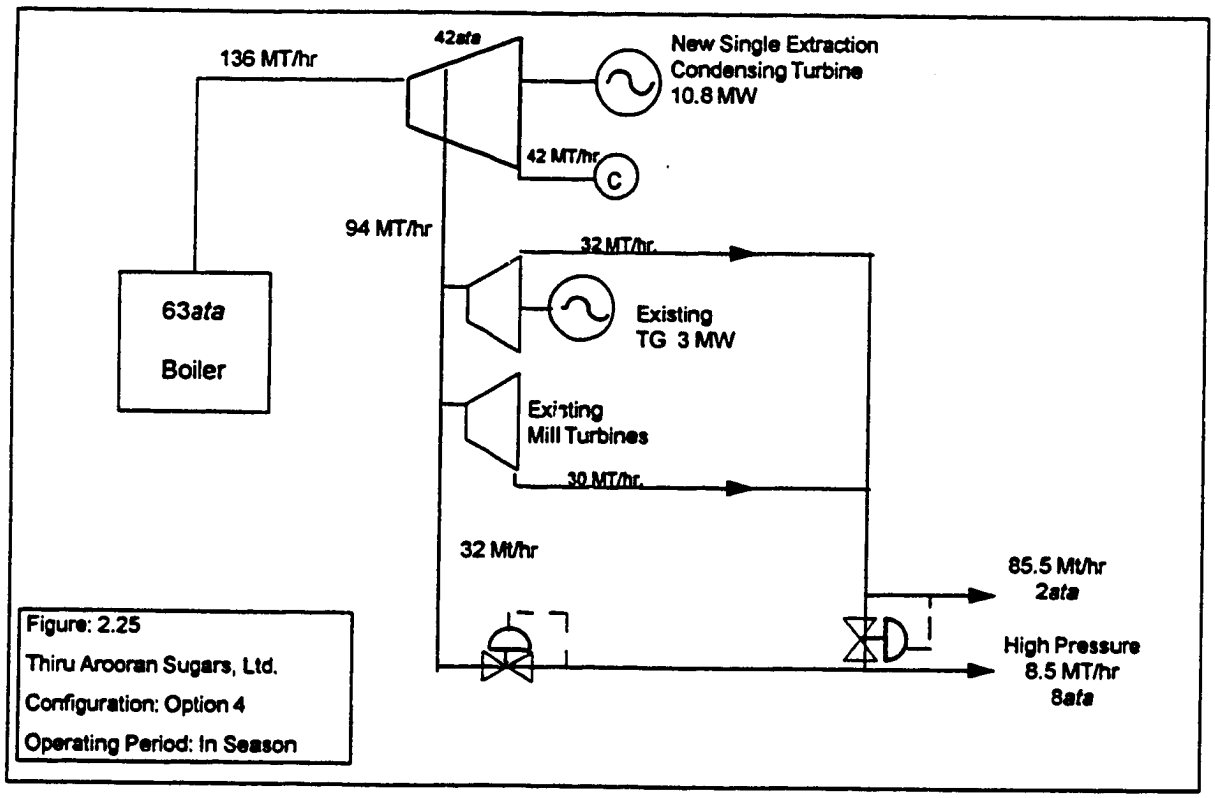

Figure: 2.25
Thiru Arooran Sugars, Ltd.
Configuration: Option 4
Operating Period: In Season

Thiru Arooran Sugars, Ltd.
Option 4 - Off Season

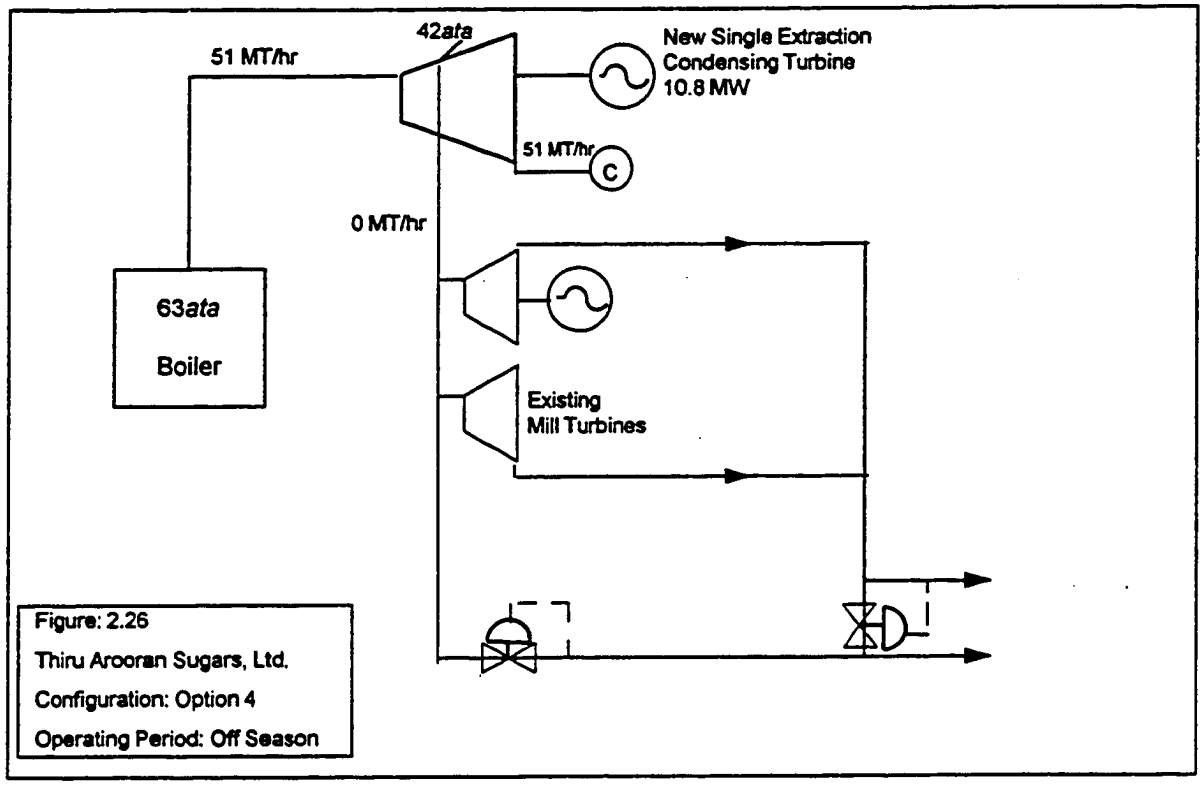

The TG set and condensers are sized to generate uniformly 10.8 MW of power throughout the year. Part load operations is feasible with a single boiler in the event of sudden boiler outages.

2.5.2.6 Option 5

The steam generation station proposed in this case is similar to that in option 4. The change proposed is in the turbine. Instead of a single extraction turbine it is proposed to install a double extraction condensing turbine extracting steam at 42 ata and 2.5 ata. This would avoid the need to utilize the pressure reducing station that is currently used. This scheme illustrated in Figures 2.27 and 2.28 will be capable of delivering at least 14 MW of power the year around.

Thiru Arooran Sugars, Ltd.
Option 5 - In Season

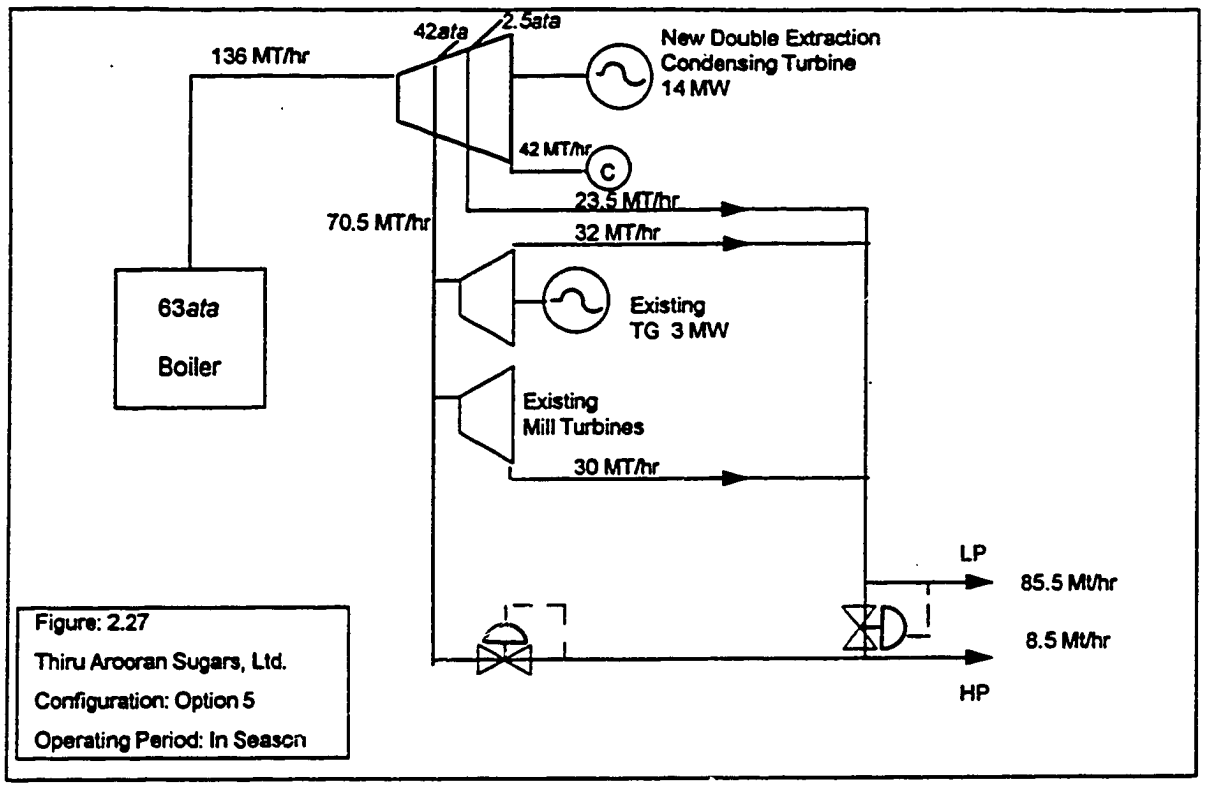

Figure: 2.27
Thiru Arooran Sugars, Ltd.
Configuration: Option 5
Operating Period: In Season

Thiru Arooran Sugars, Ltd.
Option 5 - Off Season

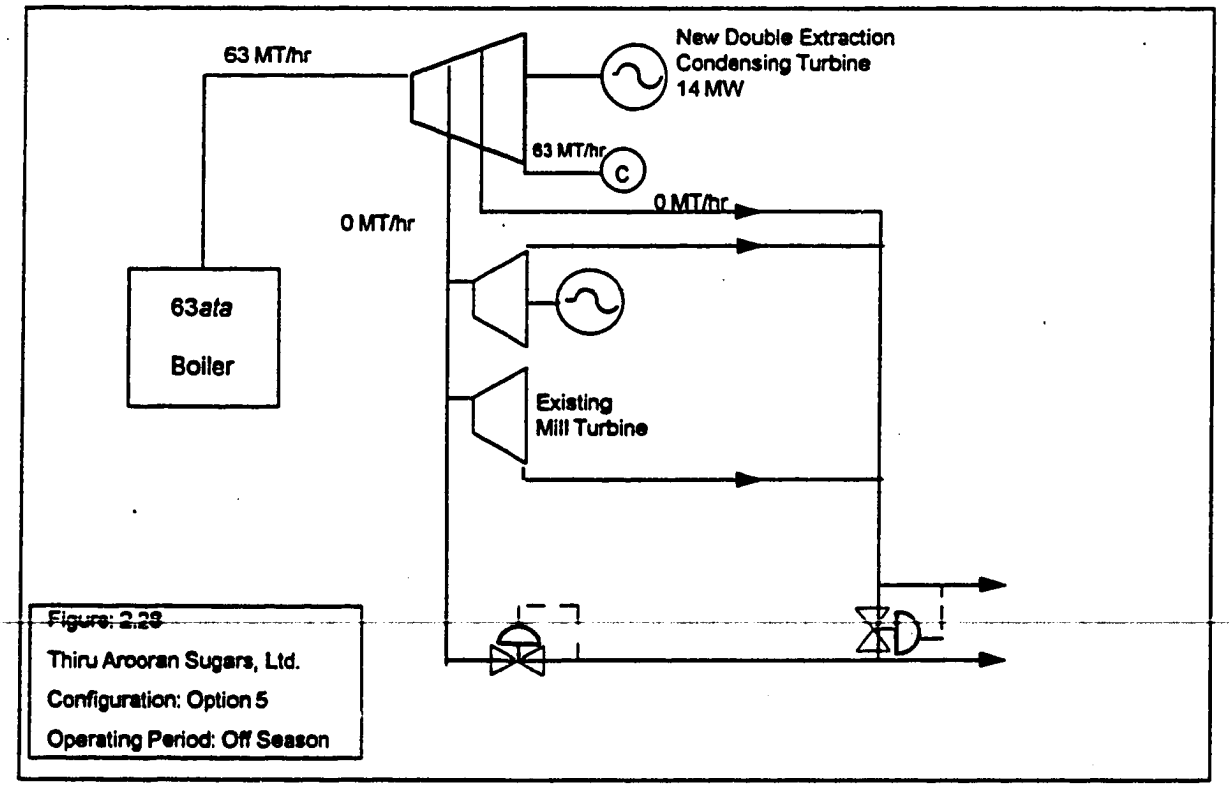

Figure: 2.28
Thiru Arooran Sugars, Ltd.
Configuration: Option 5
Operating Period: Off Season

2.5.2.7 Option 6

This is a bagasse only option and is depicted in Figures 2.29 and 2.30 for season and off-season operations. The boiler capacity proposed is sufficient to meet the process demand. The TG set is designed to generate a maximum of 11.5 MW during the off-season period. In season, however, around 10.6 MW would be generated.

Thiru Arooran Sugars, Ltd.
Option 6 - In Season

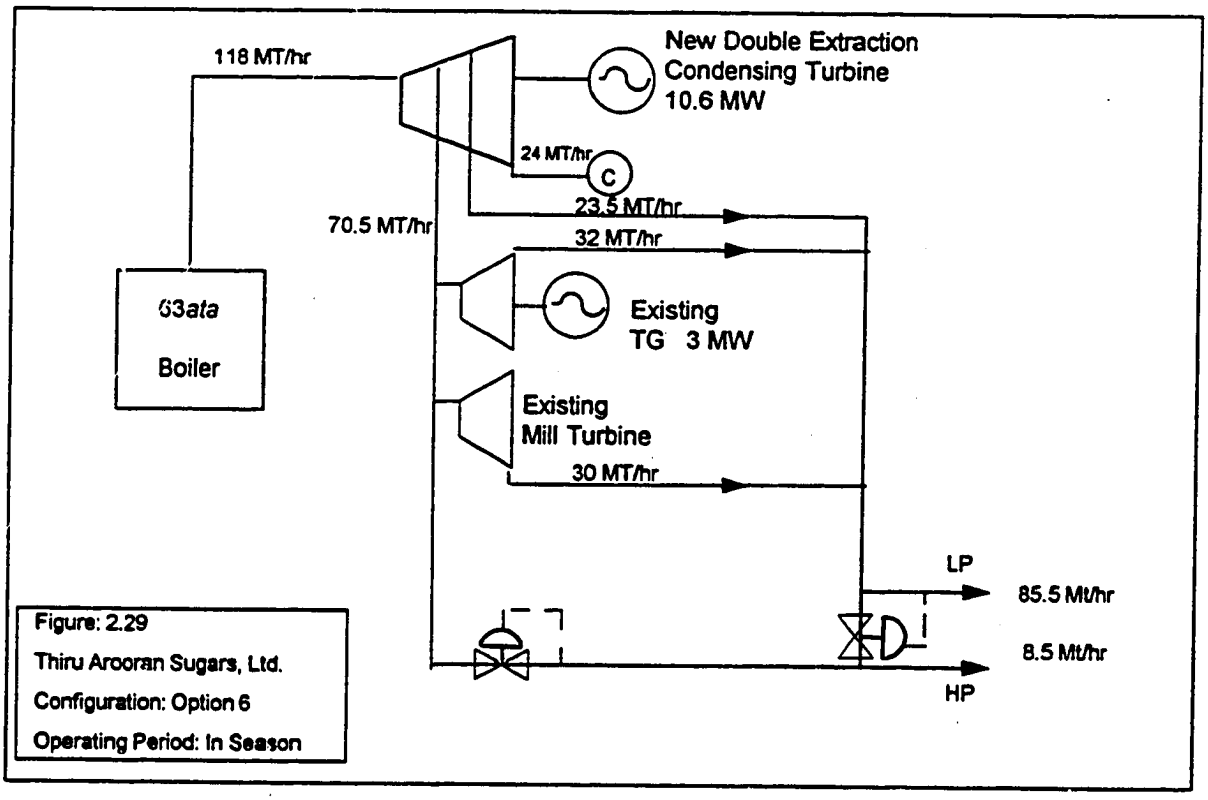

Figure: 2.29
Thiru Arooran Sugars, Ltd.
Configuration: Option 6
Operating Period: In Season

Thiru Arooran Sugars, Ltd.
Option 6 - Off Season

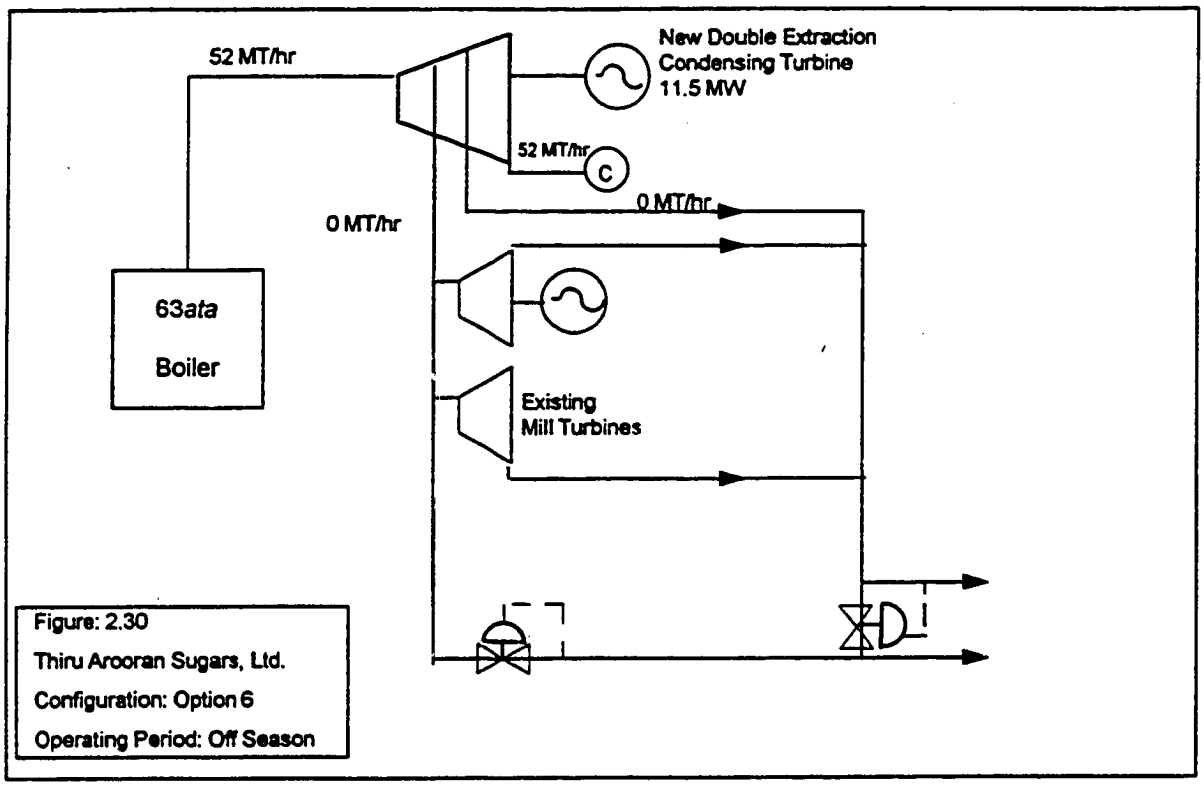

Figure: 2.30
Thiru Arooran Sugars, Ltd.
Configuration: Option 6
Operating Period: Off Season

2.5.2.8 Option 7

This case envisages a boiler capacity of 160 TPH comprising two boilers of 80 TPH, 63 ata rating each. This is substantially in excess of the process requirement. However, this quantity of steam may be generated and passed through the turbine to a condenser to generate additional power during the system peak demand period. This may be attractive to TNEB who may be willing to purchase peak power at attractive prices. The design oversizing would also help in maintaining the firm power requirements of TNEB regardless of process fluctuations. The TG set is sized to deliver 23.4 MW in season and 25.5 MW during the off-season periods. The system configurations at both these power levels is shown in Figures 2.31 and 2.32 respectively.

Thiru Arooran Sugars, Ltd.
Option 7 - In Season

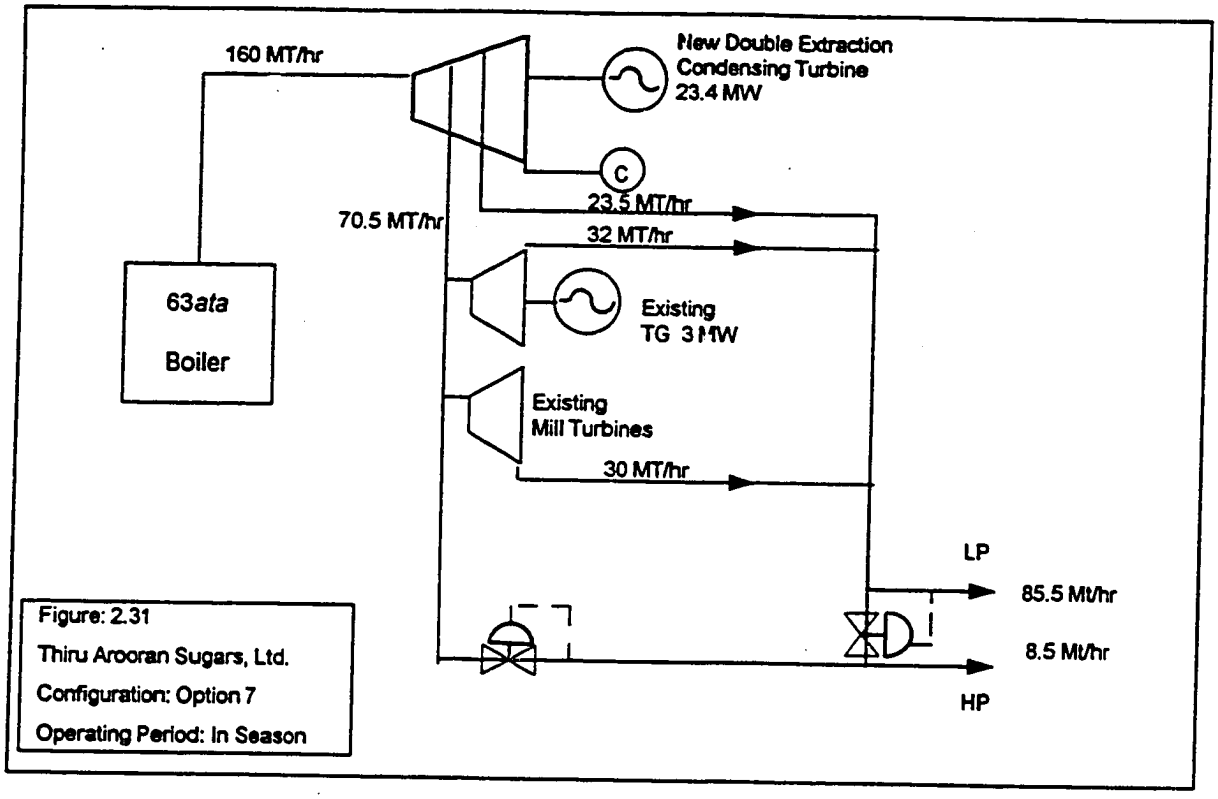

Figure: 2.31
Thiru Arooran Sugars, Ltd.
Configuration: Option 7
Operating Period: In Season

Thiru Arooran Sugars, Ltd.
Option 7 - Off Season

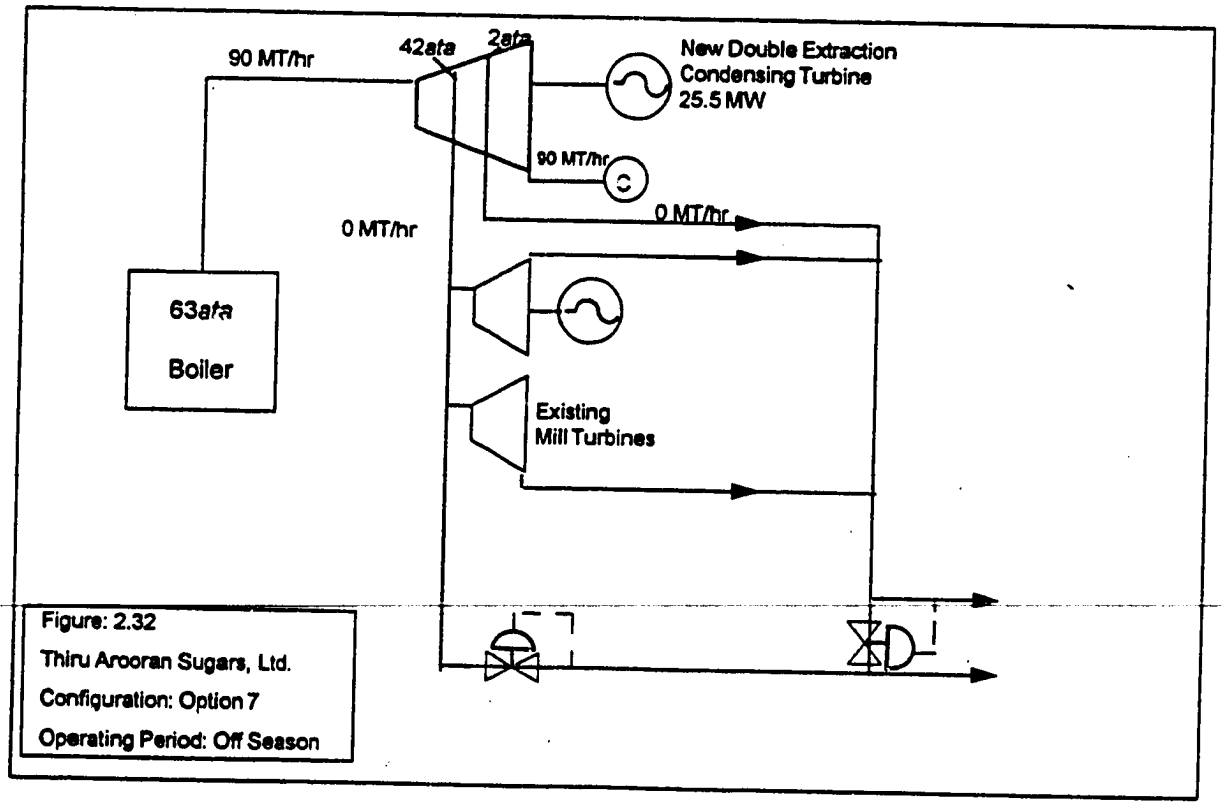

Figure: 2.32
Thiru Arooran Sugars, Ltd.
Configuration: Option 7
Operating Period: Off Season

2.5.4 Options Finalized at Madras Workshop

A series of workshops on Development and Financing of Sugar Cogeneration projects in India at Madras, Bombay and Delhi was organized between November 2 to 6, 1992 to discuss the findings of the current study and amend the report based on the workshop observations and recommendations. At the Madras workshop representatives from Thiru Arooran suggested additional options (Option 8 and 9) based on two capacity levels: 3000 TCD and 5000 TCD. Table 2.6 provides the details of the steam and power demand by the factory at the two production capacity levels.

TABLE 2.6: STEAM/POWER DATA OF THIRU AROORAN AT 3000 TCD AND 5000 TCD CAPACITY LEVELS

DESCRIPTION	3000 TCD (Option 8)	5000 TCD (Option 9)
Crushing rate on 22 hour basis	136	227
Bagasse produced (30% on season average)	900 MT/day	1500 MT/day
Lignite requirement during season (5% on bagasse)	45 MT/day	75 MT/day
Steam produced on bagasse, @ 2.3 MT of steam/MT of bagasse	2079 MT/day	3465 MT/day
Steam produced on lignite @ 3.01 MT of steam/MT of lignite	135 MT/day	225.75 MT/day
Steam produced per hour	92 MT/hour	153.7 MT/hour
Process steam demand at 1.5 ata (40% on cane)	54.5 MT/hour	90.8 MT/hour
Process steam demand at 7 ata	6.8 MT/hour	11.35 MT/hour
Power from 1.5 ata exhaust steam @ 6.78 kg. of steam/kWh	3000 kW	13392 kW
Power from 7 ata exhaust steam @ 11.2 kg. of steam/kWh		1013 kW
Total condensing steam	30,700 kg/hour	51,550 kg/hour
Power from condensing steam @ 4.6 kg of steam/kWh	6674 kW	11,206 kW
Total power generated	9674 kW	25,611 kW
Captive Power requirement	3000 kW	8000 kW
Surplus power for exporting to the grid	6674 kW	17,611 kW

2.5.4.1 Option 8

Figure 2.32A provides the schematic of the cogeneration system at the 3000 TCD capacity level. This case envisages a new boiler of 60 TPH, 63 ata, 480°C rating connected to a 9.67 MW fully condensing turbine. This system is integrated with the existing 70 TPH, 43 ata, 400°C boiler and turbogenerator network and is shown in Figure 2.32A.

Thiru Arooran - Option 8 - 3000 TCD: In Season

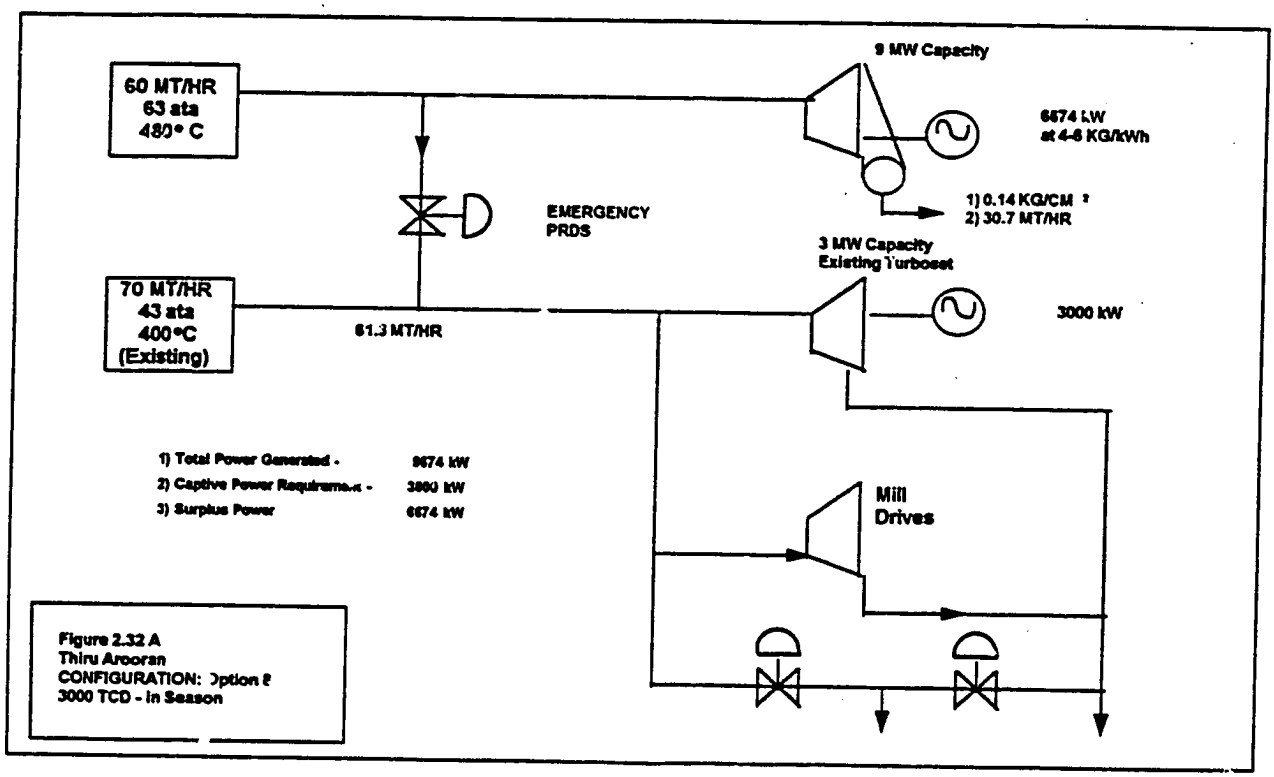

2.5.4.2 Option 9

This case envisages the addition of 3 x 60 TPH boilers at 63 ata, 480°C and three steam turbines with the following capacities:

i. 1 x 9.67 MW Fully Condensing
ii. 1 x 8.0 MW Back Pressure
iii. 1 x 8.0 MW Double Extraction Condensing

The total in-plant power generation will therefore be 25.67 MW and, after accounting for the 8 MW captive power needs for the 5000 TCD capacity plant, an average of 17.67 MW will be exported to the grid during the season time. Figure 2.32B provides the schematic of the cogeneration plant at the 5000 TCD capacity level.

Thiru Arooran - Option 9 - 5000 TCD: In Season

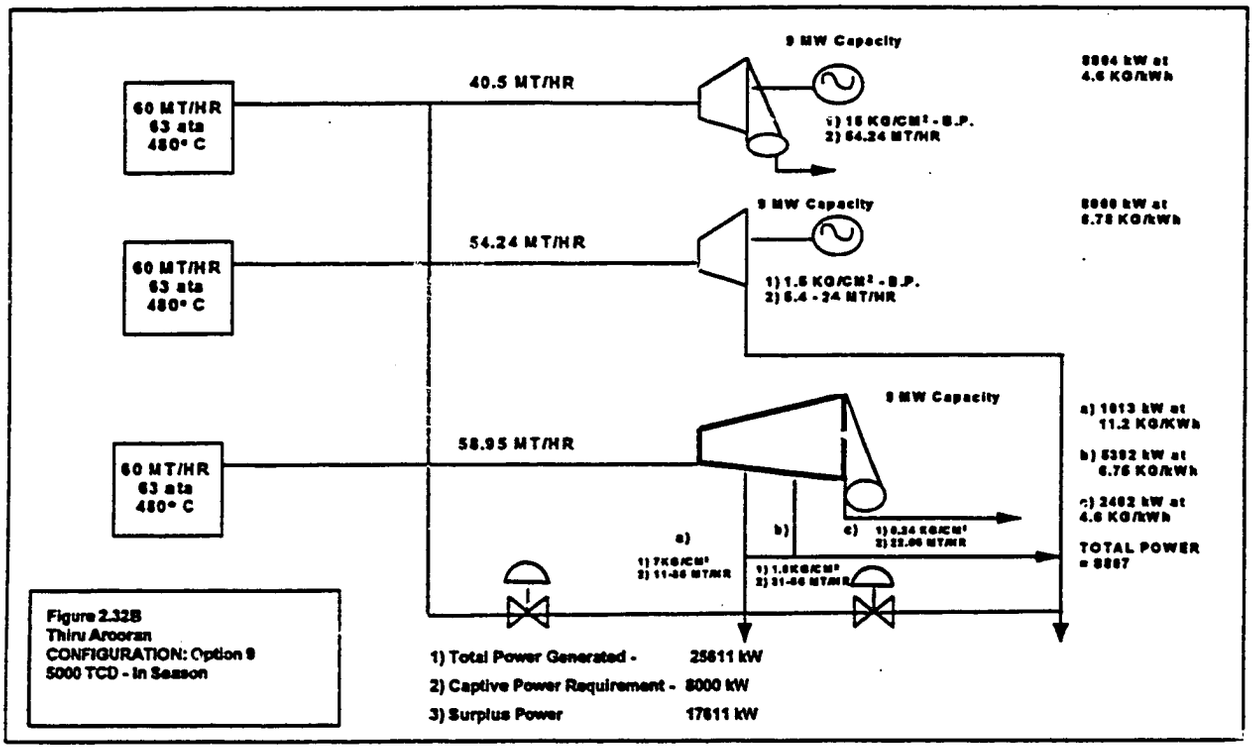

Figure 2.32B
Thiru Arooran
CONFIGURATION: Option 9
5000 TCD - In Season

2.5.5 Summary of System Options

Table 2.7 shows the comparison among the system option case examples. Additional detail can be found in Appendix A2.

TABLE 2.7: THIRU AROORAN POWER GENERATION AND EXPORT SYSTEM OPTIONS

	Base Case	Option 1	Option 2	Option 3	Option 4	Option 5	Option 6	Option 7	Option 8	Option 9
Generated Power, MW										
Season	3.0	9.80	12.60	15.30	13.80	17.00	13.60	26.4	9.67	25.67
Off-Season	0	6.80	9.60	12.30	10.80	14.00	11.50	25.5	6.67	18.20
Net Exportable Power, MW										
Season	0	4.80	7.60	10.25	8.80	12.00	8.60	21.4	6.67	17.67
Off-Season	0	4.80	7.60	10.25	8.80	12.00	9.50	23.5	5.67	17.20
Energy Generated, MWh/Yr.										
Season	18,359	60,404	77,122	93,636	84,456	104,040	83,232	161,658	59,180	156,733
Off-Season	0	13,248	18,432	23,616	20,736	26,880	22,080	48,960	12,806	34,944
Total	18,359	73,652	95,544	117,252	105,192	130,920	105,312	209,578	71,986	191,677
Energy Exported MWh/Yr										
Season	0	29,988	46,512	62,730	53,856	73,440	52,632	130,968	40,820	107,773
Off-Season	0	9,408	14,592	19,680	16,896	23,040	18,240	45,120	10,886	33,024
Total	0	39,396	61,104	82,410	70,752	96,480	70,872	176,088	51,706	140,797
Fuel Consumed Tonnes/Yr										
Bagasse	251,744	276,675	276,675	276,675	276,675	276,675	276,675	276,675	229,500	382,500
Lignite	0	29,600	39,360	47,680	32,350	60,190	0	110,170	38,645	92,825
% Energy from Bagasse	100	87.5	84.0	81.30	86.5	83.80	100.00	65.4	82.0	76.0

2.6 Case Study C: Vasantdada Shetkari SSK Ltd.

2.6.1 Introduction

Vasantdata Shetkari SSK Ltd. (VSSK) is a farmers' cooperative which is located in Sangli, Maharashtra. VSSK operates a 5,000 tonnes cane per day factory. Although the factory capacity can be expanded to 7,500 tonnes cane per day, management does not currently have plans to expand beyond 6,000 tonnes cane per day. In addition to the sugar factory, the cooperative also operates a distillery and a chemical plant which receive electricity and steam from the sugar factory. The reliability of electrical power from the utility is poor, with frequent power cuts. Power shortage is likely to increase in the future, making it attractive to cogenerate electricity from bagasse to supply the electricity needs of the chemical plants owned by VSSK or by other busineses in Sangli. Unlike Aruna Sugars and Thiru Arooran in Tamil Nadu, VSSK does not have a proximate source of lignite.

Table 2.8 shows some of VSSK's production statistics. On average, 924,048 tonnes of cane are crushed annually. With fiber % cane at 14.3%, the production of bagasse averages 284,442 tonnes per year. The moisture content of bagasse is about 50-51%. The mill capacity is 5000 tonnes cane per day, and on average the factory crushes 4,972 tonnes per day. During the season, downtime is approximately 19%.

TABLE 2.8: PRODUCTION DATA OF VSSK LTD.

Milling Capacity, tonnes cane per day	5,000
Cane crushed, tonnes per year	924,048
Crop duration , days	200
Off-season, days	100
Average crushing rate, tonnes cane per day	4,972
Downtime, % milling season	19.42
Pol % cane	13.69
Fiber % cane	14.28
Bagasse % cane	30.78
Moisture % bagasse	50.56
Bagasse produced, tonnes	284,422
Bagasse sold to pulp manufacturers, tonnes/year	0

Table 2.9 lists the installed boiler capacity at VSSK. The cooperative operates nine boilers, all of them old and of small capacity. They are designed for low pressures and are equipped with poor combustion systems. The boilers operate at 21 ata, 343 °C. Boiler capacities range from 13 to 35 TPH. A number of the boilers, though not all, have air preheaters and economizers. There is no provision for air pollution control.

TABLE 2.9: VSSK BOILER CONFIGURATION

Number of units	3	3	3
Make	VKW	WIL	J.T
Capacity tonnes/hr	13	20	35
Year of installation	unknown	unknown	unknown
Type	w.tube	w.tube	w.tube
Pressure Kg/sq. cm.	21	21	21
Temperature C	343	343	343

Table 2.10 lists the turbogenerator capacity. Electricity is generated at 440 volts. The turbogenerator set consists of 5 units ranging from 1.25 to 2.5 MW, for a total installed capacity of 9.3 MW.

TABLE 2.10: VSSK TURBOGENERATOR CONFIGURATION

TG #	1	2	3	4	5
Make	Busiq	Elliot	Triveni	Unknown	Triveni
Year	N/A	N/A	N/A	N/A	N/A
Capacity, kW	1250	1250	1250	1800	2500
Speed, RPM	10020	5000	8200	9300	8200
Steam, Kg/kWh	N/A	N/A	N/A	N/A	N/A
Inlet Temp., C	300	300	300	300	300
Inlet pressure, ata	17	17	17	17	17
Exhaust press., ata	1	1	1	1	1

2.6.2 System Options

2.6.2.1 The Base Case - 6000 TCD 56% Steam on Cane, 21 ata

The Base Case is the existing factory processing 6000 TCD as planned by the management. The present installation is not designed to produce additional power for sale to the utility nor to meet the adjoining distillery's power demand. The steam balance is based on 6000 TCD crushing and 56% steam on cane. The base case system configuration is depicted in figures 2.33 and 2.34 for in-season and off-season operations respectively

VSSK, SANGLI: Base Case - In Season

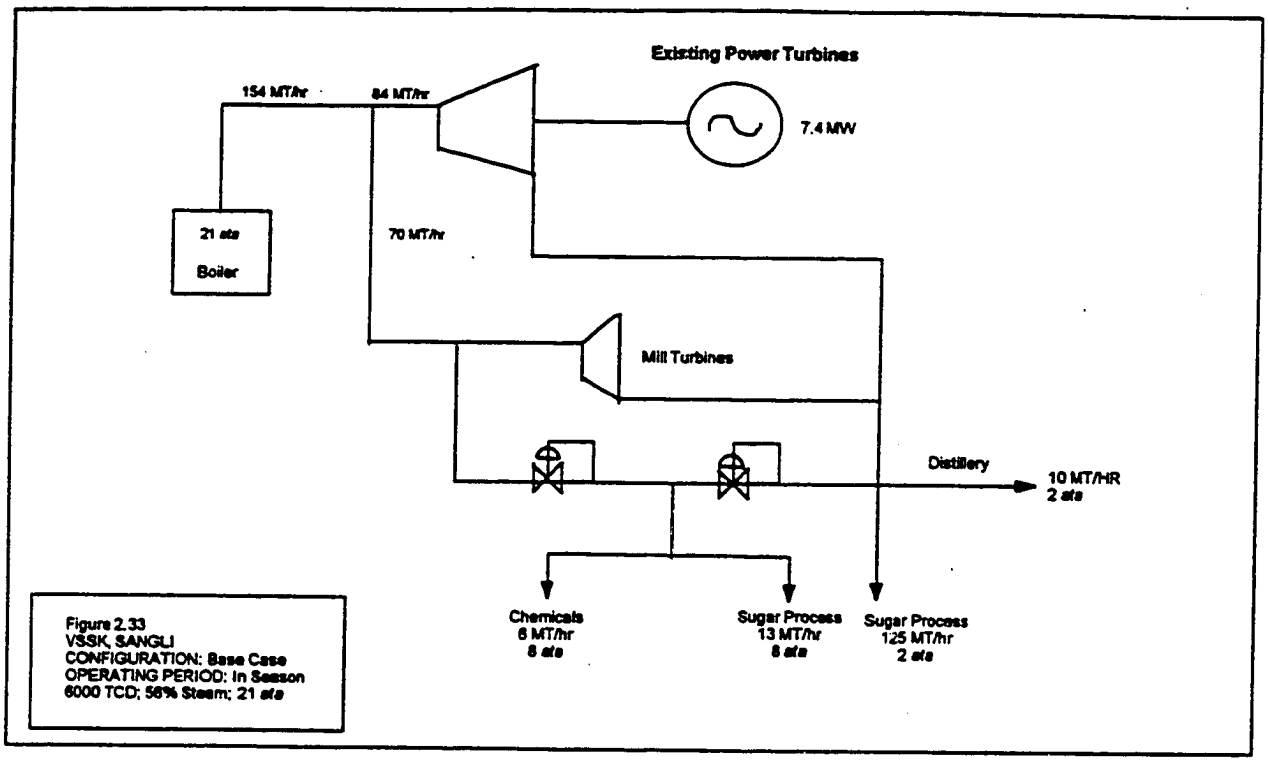

Figure 2.33
VSSK, SANGLI
CONFIGURATION: Base Case
OPERATING PERIOD: In Season
6000 TCD; 56% Steam; 21 ata

VSSK, SANGLI: Base Case - Off Season

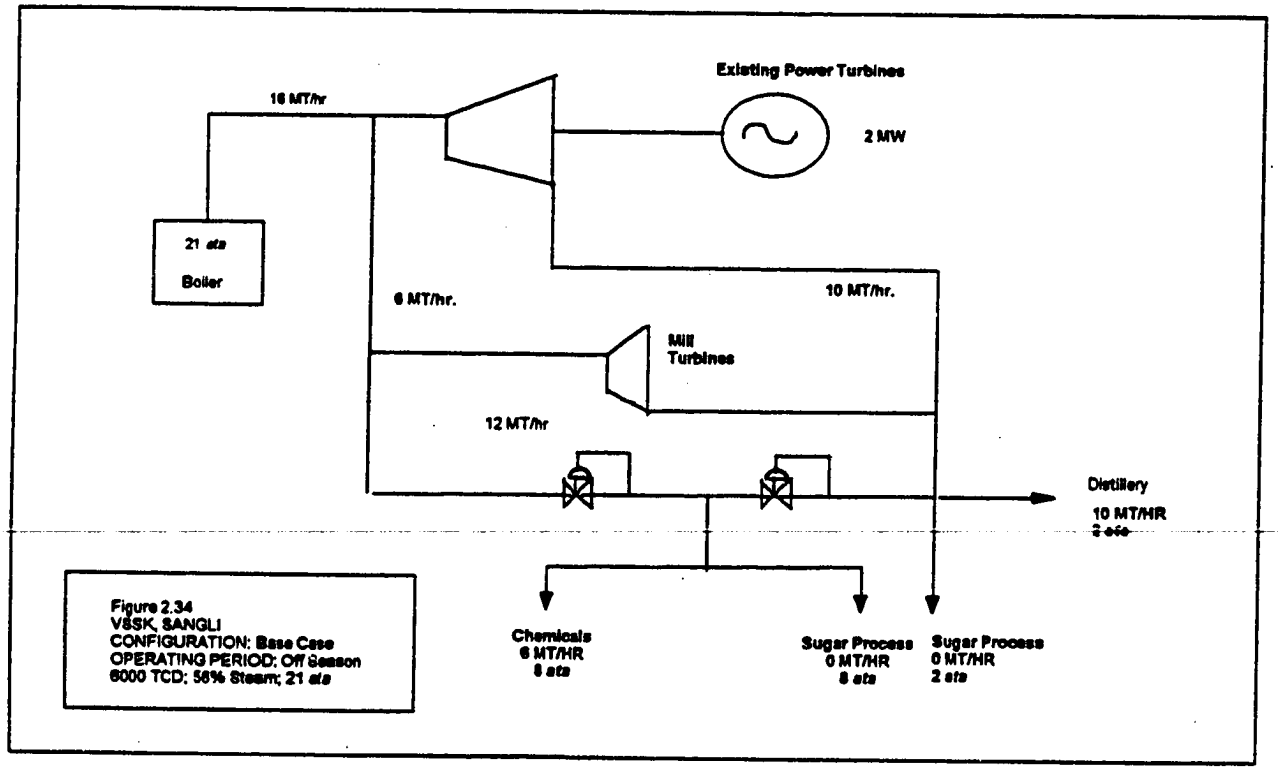

Figure 2.34
VSSK, SANGLI
CONFIGURATION: Base Case
OPERATING PERIOD: Off Season
6000 TCD; 56% Steam; 21 ata

2.6.2.2 Option 1 - 6000 TCD 50% Steam on Cane, 63 ata, 480°C

The basis in this case is 6000 TCD crushing and a steam requirement of 50% on cane crushed. It is proposed that a new boiler 160 TPH (or 2x80 TPH Boilers) operating at 63 ata, 480°C is installed. A double extraction condensing turbine is also installed extracting 72 TPH at 21 ata and 69 TPH at 2 ata. During season approximately 15% bagasse is saved for burning during off season. Since no other supplementary fuel such as lignite is available in the off-season at an economic price, saved bagasse and bagasse imported from nearby factories is burned year round. The boiler and turbogenerator are sized to provide the requirements for process steam for the sugar factory, the distillery and the chemical plant while at the same time ensuring an uniform level of power generation. Figures 2.35 and 2.36 show the steam flows during season and off season.

VSSK, SANGLI: Option 1 - In Season

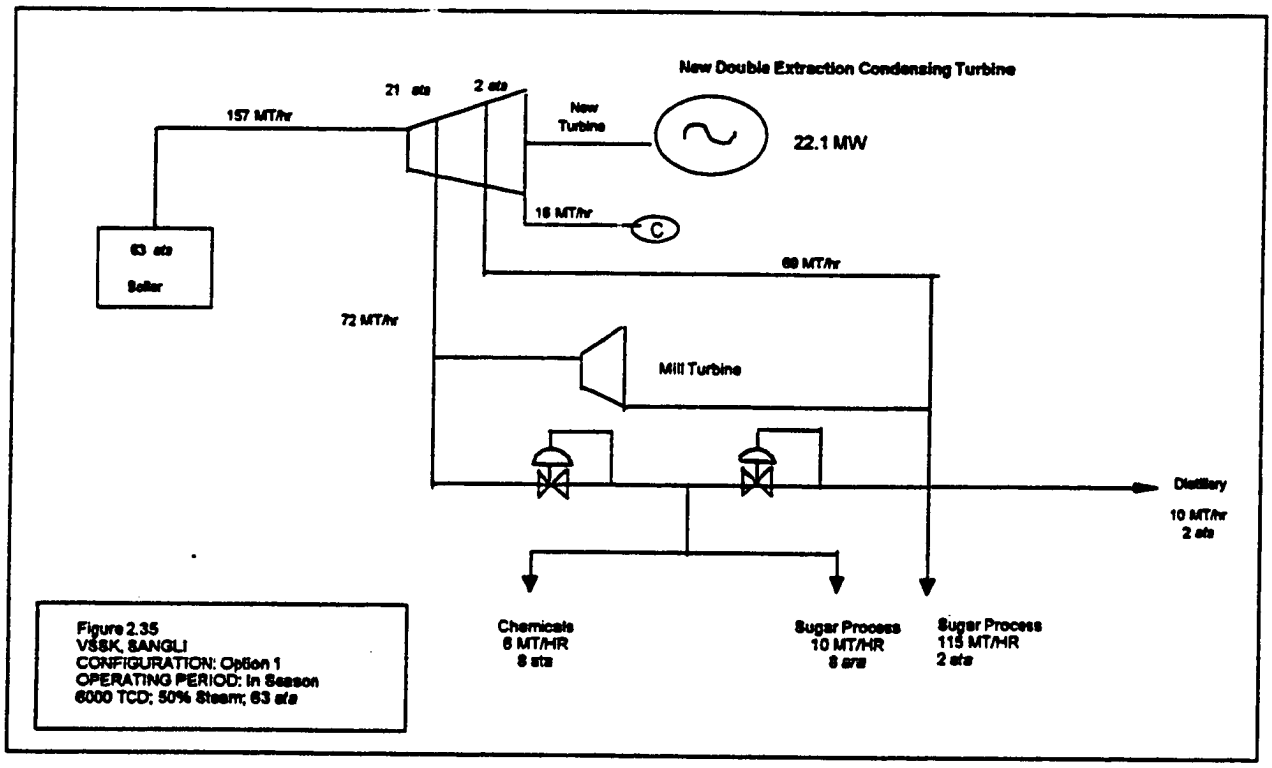

VSSK, SANGLI: Option 1 - Off Season

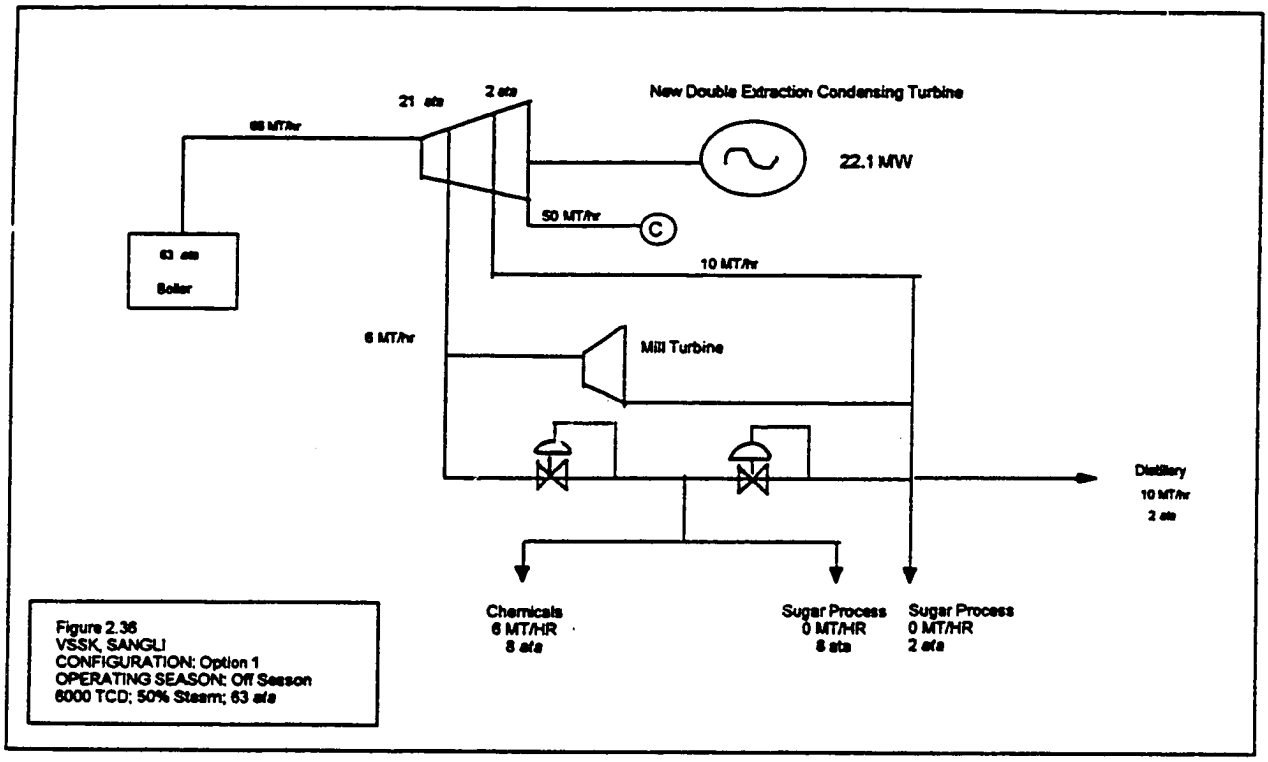

Figure 2.36
VSSK, SANGLI
CONFIGURATION: Option 1
OPERATING SEASON: Off Season
6000 TCD; 50% Steam; 63 ata

2.6.2.3 Option 2 - 6000 TCD 40% Steam on Cane, 63 ata, 480°C

This option is similar to option 1, except that the process steam requirements of the sugar factory is reduced to 400 kg/Tonne cane crushed. Bagasse is saved for off-season power generation, which is kept at the same level as during the season. Figures 2.37 and 2.38 indicate the steam flows during season and off-season periods.

VSSK, SANGLI: Option 2 - In Season

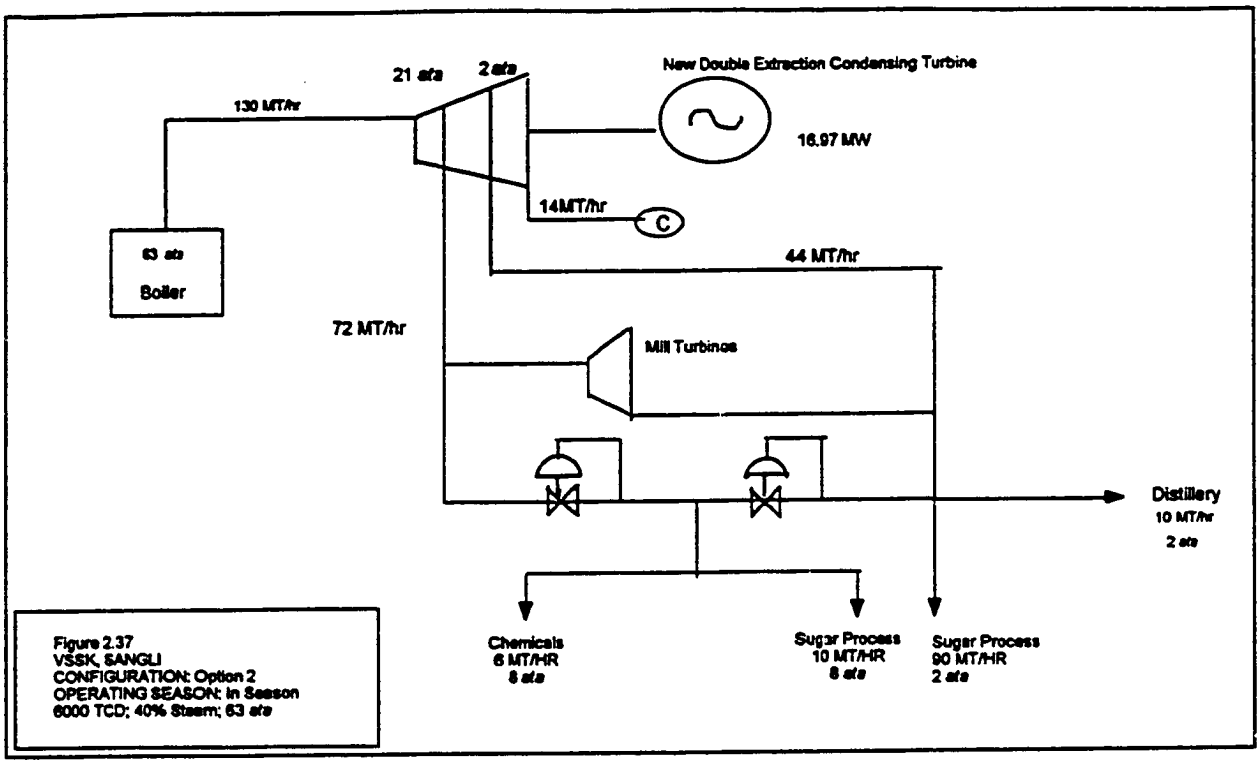

Figure 2.37
VSSK, SANGLI
CONFIGURATION: Option 2
OPERATING SEASON: In Season
6000 TCD; 40% Steam; 63 ata

VSSK, SANGLI: Option 2 - Off Season

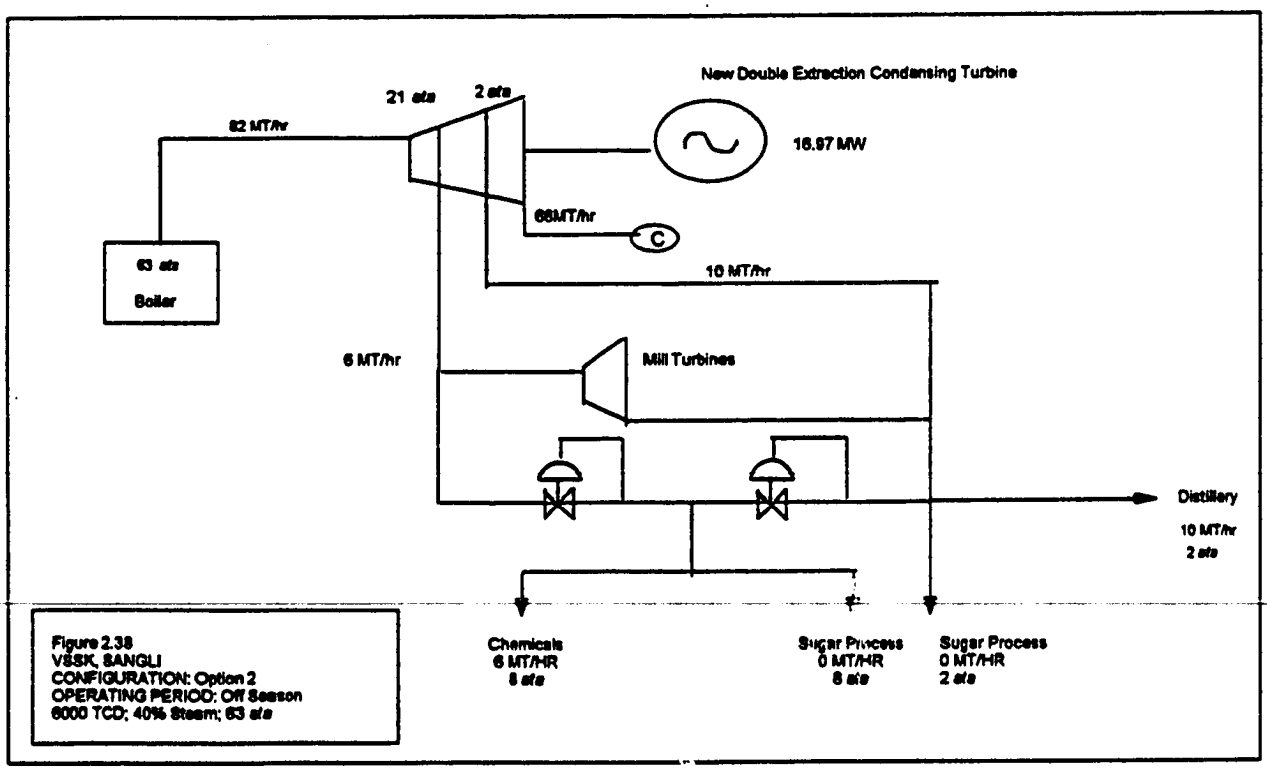

Figure 2.38
VSSK, SANGLI
CONFIGURATION: Option 2
OPERATING PERIOD: Off Season
6000 TCD; 40% Steam; 63 ata

2.6.2.4 Option 3 - 6000 TCD 50% Steam on Cane, 42 ata, 400°C

Options 3 and 4 reflect lower steam pressure (42 ata versus 63 ata) because of plant management concern over high steam pressure. Steam requirements for option 3 remain at 50% of cane crushed. Some bagasse is saved during the season, but to support off-season operation fully, supplementary bagasse will have to be purchased. Figs. 2.39 and 2.40 show steam flows during the season and off-season period.

VSSK, SANGLI: Option 3 - In Season

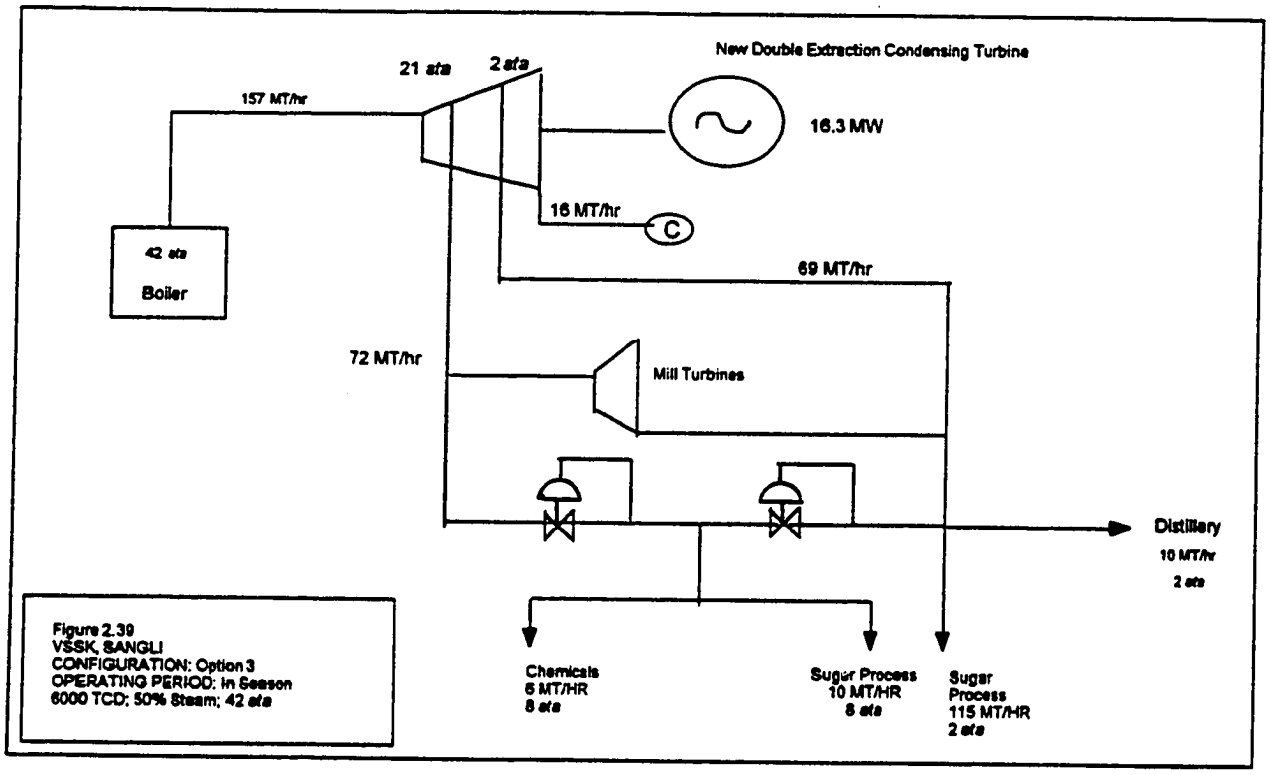

Figure 2.39
VSSK, SANGLI
CONFIGURATION: Option 3
OPERATING PERIOD: In Season
6000 TCD; 50% Steam; 42 ata

VSSK, SANGLI: Option 3 - Off Season

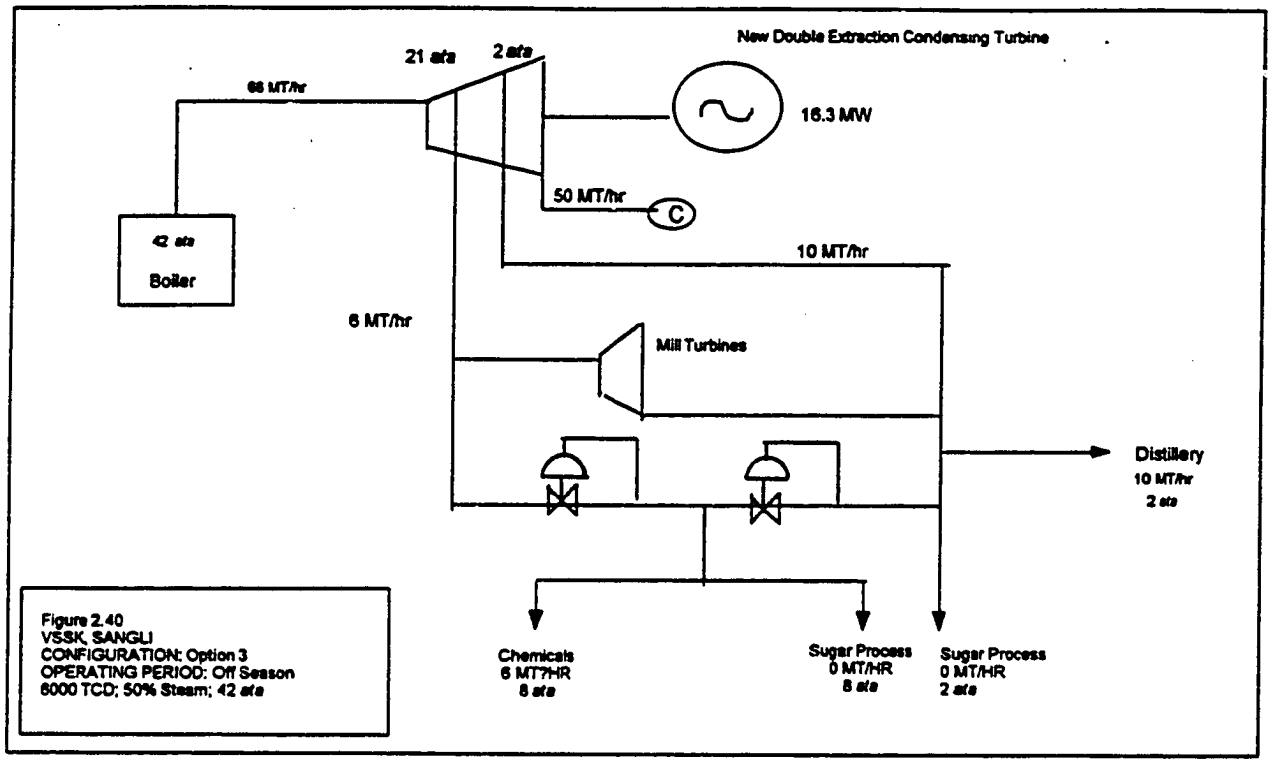

Figure 2.40
VSSK, SANGLI
CONFIGURATION: Option 3
OPERATING PERIOD: Off Season
6000 TCD; 50% Steam; 42 ata

2.6.2.5 Option 4 - 6000 TCD 40% Steam on Cane, 42 ata, 400°C

This is similar to option 2 so far as steam demand is concerned, i.e., 40% steam on cane at a generation pressure of 42 ata. The steam flows in-season and off-season are shown in Figs 2.41 and 2.42. No bagasse will need to be purchased.

VSSK, SANGLI: Option 4 - In Season

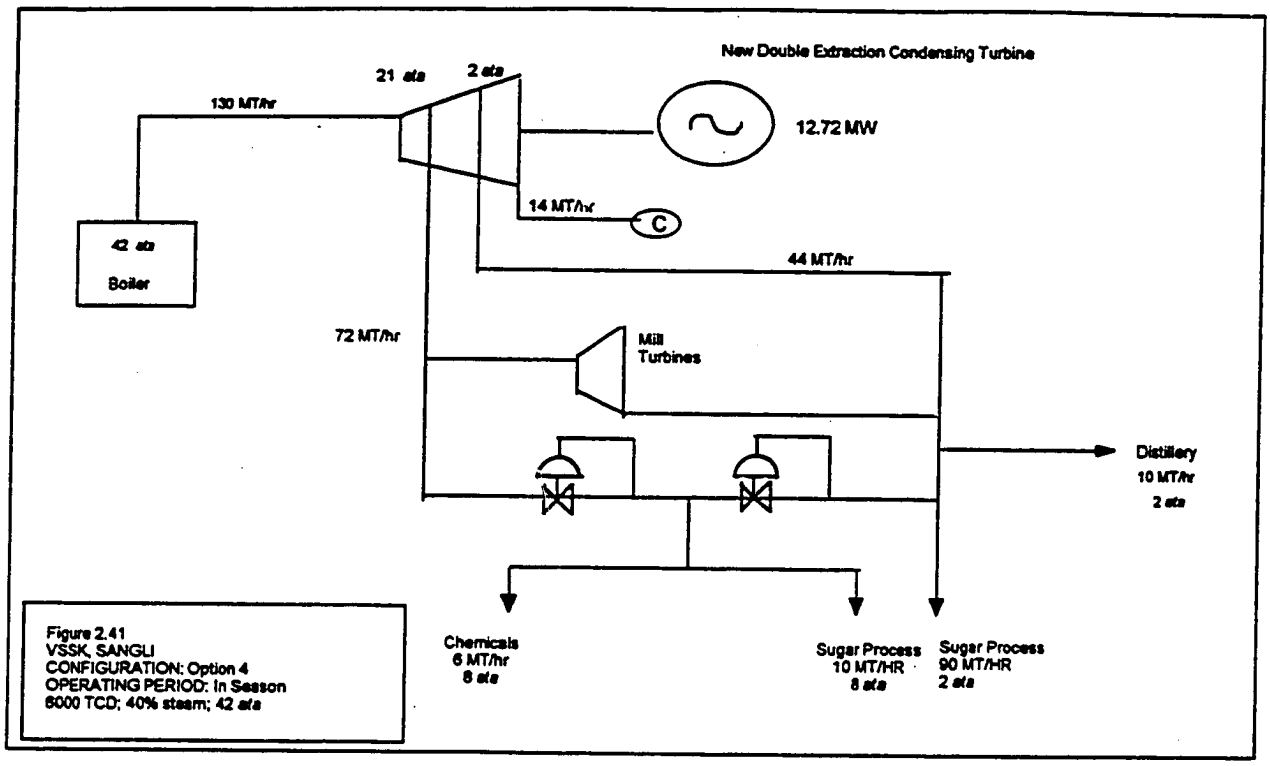

Figure 2.41
VSSK, SANGLI
CONFIGURATION: Option 4
OPERATING PERIOD: In Season
6000 TCD; 40% steam; 42 ata

VSSK, SANGLI: Option 4 - Off Season

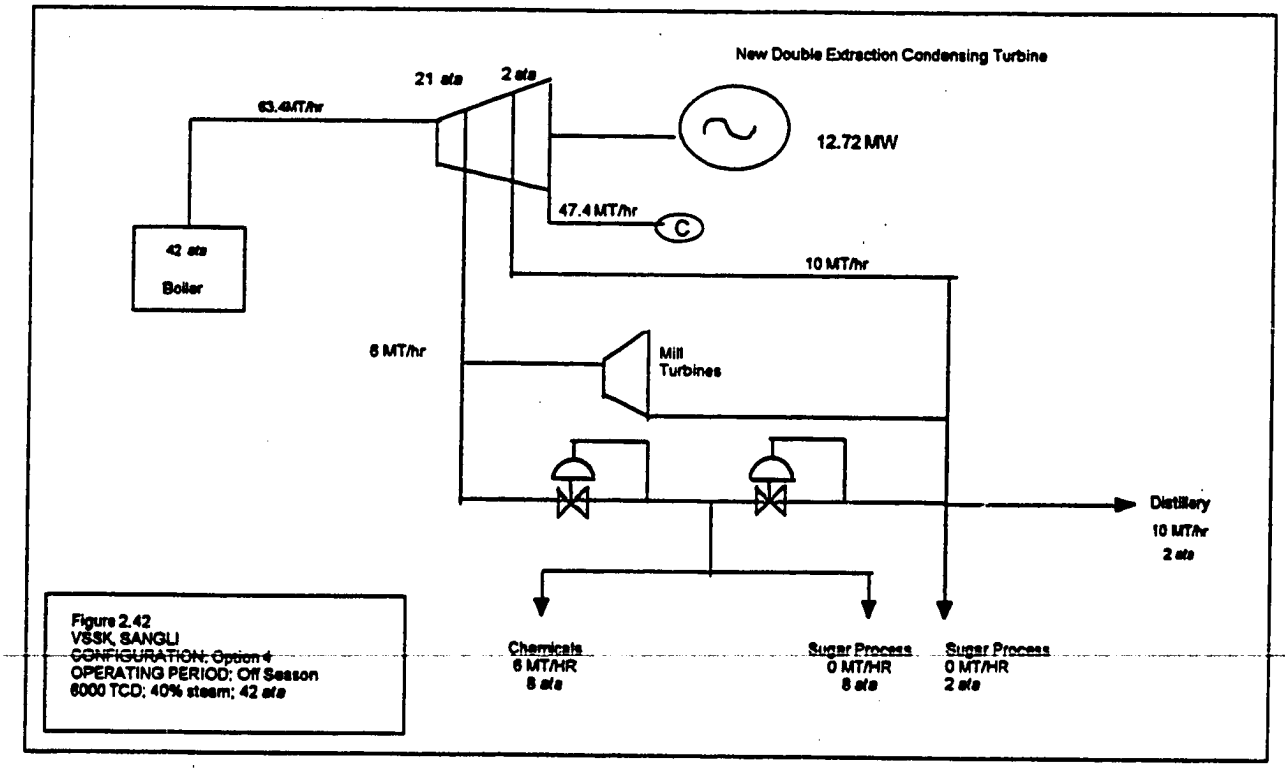

Figure 2.42
VSSK, SANGLI
CONFIGURATION: Option 4
OPERATING PERIOD: Off Season
6000 TCD; 40% steam; 42 ata

A comparison of the financial analysis of options 1 & 2 and options 3 & 4 respectively should help the plant management to evaluate the costs and the benefits of 63 ata vs 42 ata steam generation pressures. Option 1, at an estimated cost of Rs 535 Million ($19.1 million) is the most capital intensive of the four system options. Option 3 at the estimated project cost of Rs 485 Million ($17.3 million) represents a lower cost alternative. Option 2 has an estimated project cost of Rs 510 Million ($ 18.2 million), not including efficiency improvements, and therefore represents a larger capital expenditure than option 3. Option 4 at Rs 450 million ($16.1 million) is the least cost option, but, like Option 2, it would involve some additional capital outlays for in process steam economy measures.

The Mill has a capacity exceeding 7000 TCD, although only 6000 TCD is actually used. The scope for steam and power economy is considerable with steam usage around 55% on cane. Options 5 & 6 described below envisage a higher crushing rate, lower steam consumption and higher generation of bagasse for use during the off-season.

2.6.2.6 Option 5 - 7000 TCD 50% Steam on Cane, 63 ata, 480°C

To meet the process steam demand at 7000 TCD and 50% steam on cane, it is proposed to install 3 x 60 TPH boilers operating at 63 ata and 480°C. The turbo-generator set is designed to operate at 25.3 MW, at which level only 2 months off-season operation is possible on saved bagasse. The daily requirement of 1250 MT of bagasse could be met by supplemental purchases from neighboring mills. Figures 2.43 and 2.44 depict the steam flows during both the seasons.

VSSK, SANGLI: Option 5 - In Season

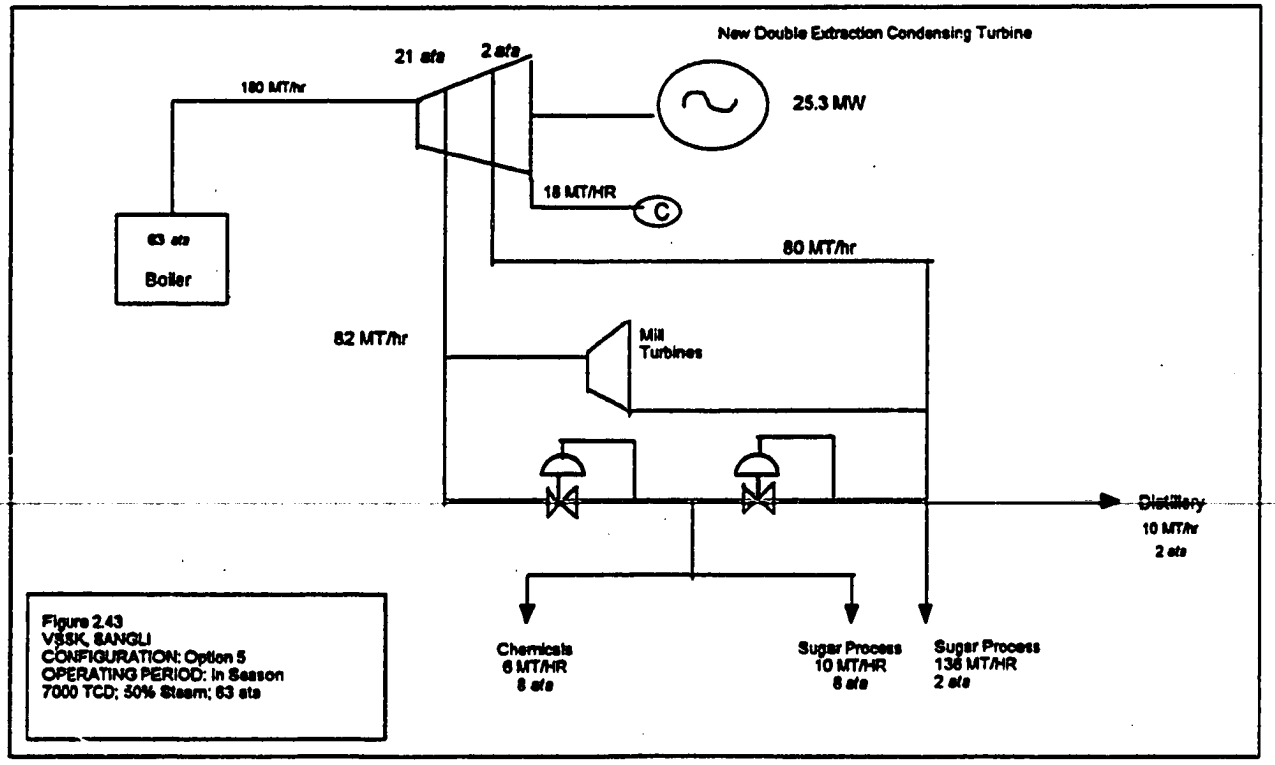

Figure 2.43
VSSK, SANGLI
CONFIGURATION: Option 5
OPERATING PERIOD: In Season
7000 TCD; 50% Steam; 63 ata

VSSK, SANGLI: Option 5 - Off Season

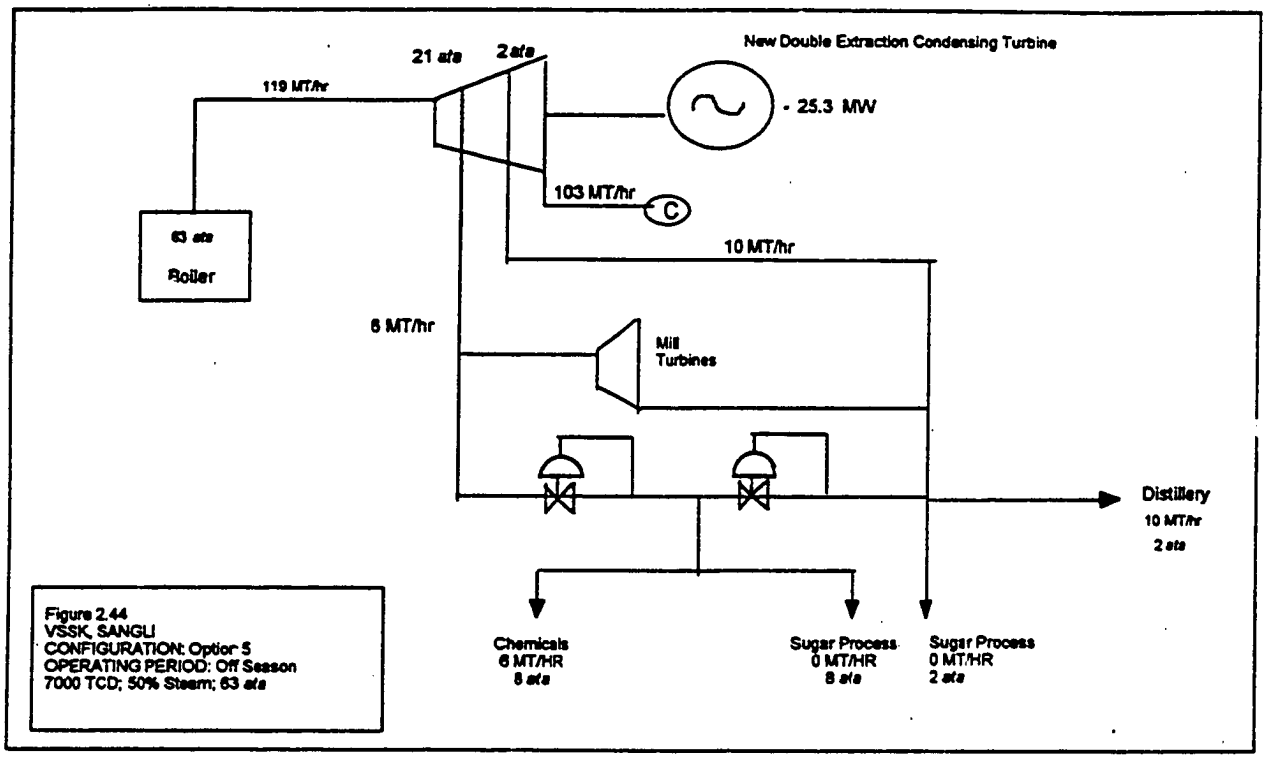

2.6.2.7 Option 6 - 7000 TCD, 40% Steam on Cane, 63 ata, 480°C

The assumption here is that the mill will reduce the steam consumption in the sugar process to 40% on cane crushed. The steam requirement in the factory can then be met by 2 boilers each 80 TPH capacity operating at 63 ata, 480°C. The turbogenerator set is designed to operate at 19.4 MW year round. During the off-season the system will operate for 141 days on saved bagasse as fuel. Figures 2.45 and 2.46 shown the steam flows during the season and off-season respectively.

VSSK, SANGLI: Option 6 - In Season

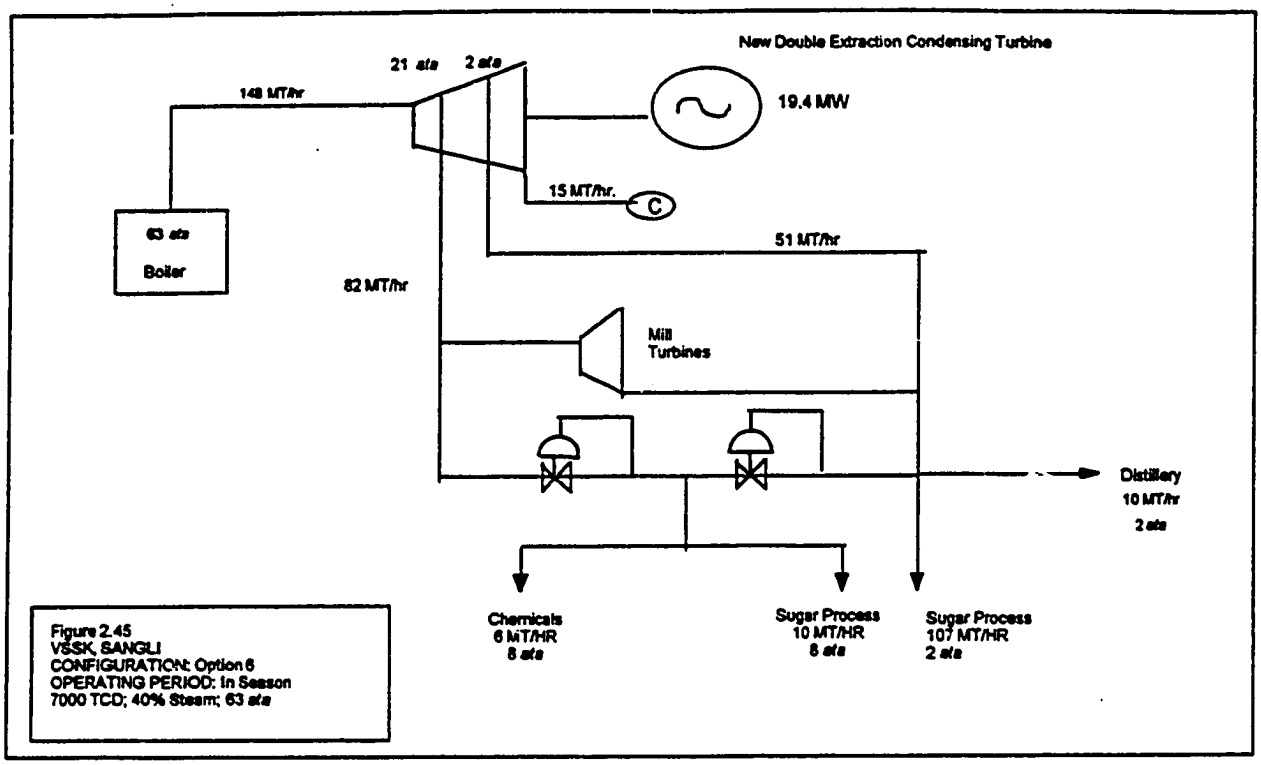

Figure 2.45
VSSK, SANGLI
CONFIGURATION: Option 6
OPERATING PERIOD: In Season
7000 TCD; 40% Steam; 63 ata

VSSK, SANGLI: Option 6 - Off Season

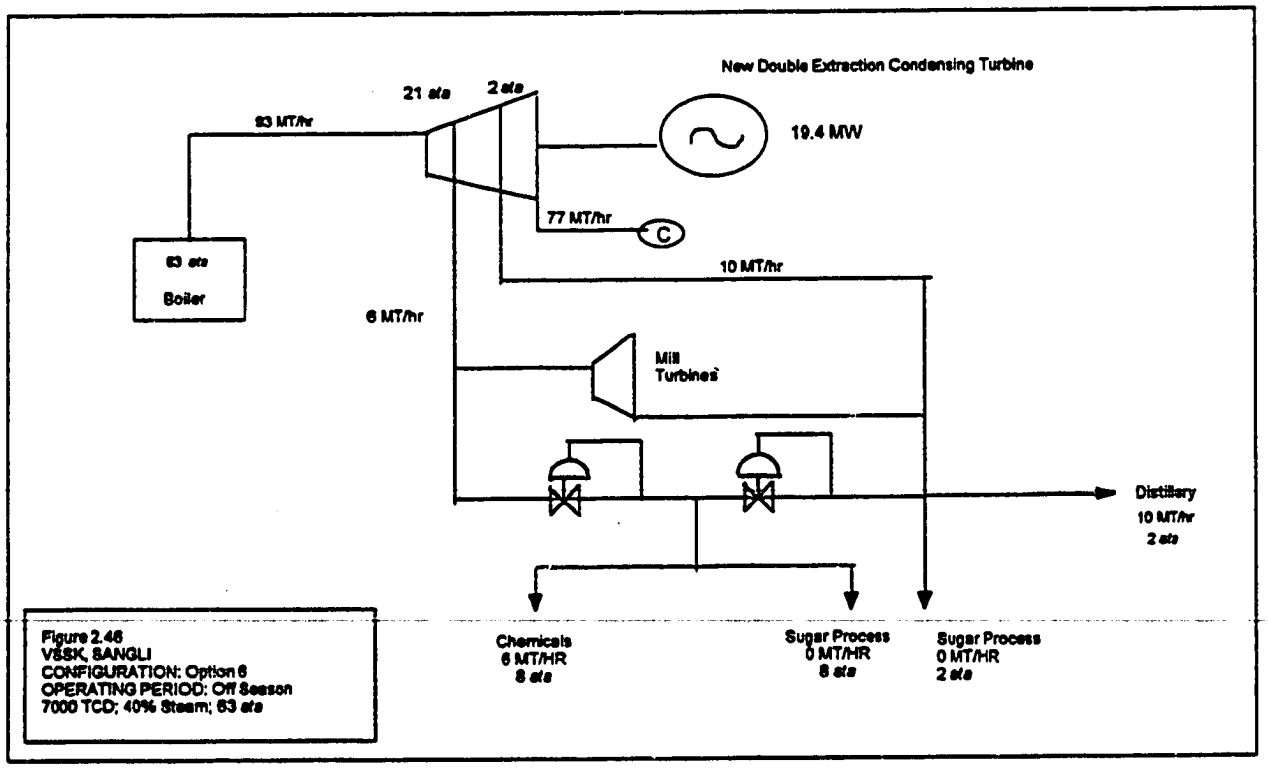

Figure 2.46
VSSK, SANGLI
CONFIGURATION: Option 6
OPERATING PERIOD: Off Season
7000 TCD; 40% Steam; 63 ata

2.6.3 Summary of System Options

Table 2.11 summarizes the main data and results of calculation of gross power generation and net exportable power for the base case and six other options. Additional detail appears in Appendix A3.

TABLE 2.11: VSSK POWER GENERATION AND EXPORT

	Base Case	Option 1	Option 2	Option 3	Option 4	Option 5	Option 6
Generated Power, MW							
Season	7.4	22.14	16.97	16.30	12.72	25.29	19.44
Off - Season	2.0	22.14	16.97	16.30	12.72	25.29	19.44
Net Exportable Power, MW							
Season	0	14.74	9.57	8.90	5.32	17.89	12.04
Off - Season	0	20.14	14.97	14.30	10.72	23.29	17.44
Energy Generated, MWh/Yr.							
Season	35,520	106,272	81,456	78,240	61,056	121,392	93,312
Off - Season	6,480	55,798	54,982	39,120	41,212	12,138	41,990
Total	2,000	162,064	136,438	117,360	102,258	133,531	135,302
Energy Exported MWh/Yr.							
Season	0	70,762	45,963	42,720	25,536	85,872	57,792
Off - Season	0	50,752	48,503	34,320	34,733	11,179	37,670
Total	0	121,504	94,439	72,040	60,269	97,051	95,482
Fuel Consumed Tonnes/Yr.							
Bagasse (season)	369,600	316,000	270,130	318,000	262,075	374,026	307,532
Bagasse (off-season)	0	53,600	99,470	51,600	86,275	166,909	123,388
Purchased	0	16,000	15,948	16,000		16,000	7,053
Total	369,600	385,600	385,548	385,600	348,350	556,335	437,973
% Energy from Bagasse	100	100	100	100	100	100	100
Surplus Bagasse	-	-	-	-	21,250	-	-

3.0 FINANCIAL ANALYSIS OF PROPOSED COGENERATION PLANTS

3.1 Introduction

Each of the design configurations described in the previous chapter was subjected to a detailed financial analysis using CANEPRO, a computer model developed by Winrock International, to simulate sugar mill cogeneration system economic performance. At each of the three sites, the six or seven investment alternatives were evaluated under a consistent set of financial assumptions in terms of pre- and post-tax rate of return, net present worth, benefit/cost ratio, average power generation cost, payback period and fuel netback value, and the results were then used to screen the alternatives. This chapter summarizes the most financially attractive investment in terms of rate of return at each mill, and Appendix B contains corresponding detailed *pro forma* cash flow spreadsheets.

The selected options are:

- Aruna Sugars - Option 4 (53 MW)
- Thiru Arooran - Option 7 (26 MW)
- VSSK Sangli - Option 6 (19 MW)

As indicated earlier, at the November, 1992, workshop convened to discuss the results of the study, the managers of the Thiru Arooran mill suggested two additional configurations for evaluation. Although these appear somewhat less economically attractive than other options at that mill, financial spreadsheets are included in Appendix B2 for them as well.

3.2 Assumptions and Model Inputs

3.2.1 Power Purchase Prices

A key element in the financial analysis is the price at which output from the cogeneration plant is purchased. In this study, no credit is given for the steam and electricity that continues to be used inside the sugar mill. It is assumed that the existing equipment could have continued to provide the steam and power as before. Thus the only output flows of interest are those which can be sold outside the mill. In this case, such output is limited to electricity.

At the present time both Maharashtra and Tamil Nadu have proposed buyback rates for cogenerated electric power. These prices are Rs 1.20 and 1.00 per kWh, respectively. ($1.00 U.S. = Rs 28) Chapter 4 of this report discusses the value of the added power that the mills could generate in terms of the cost the electric boards would otherwise have to incur to supply the same power to their customers. These "avoided costs" have three components: an energy component that may vary with the time of day and season, a capacity charge that will vary with the time of day and season, and finally, a network charge that covers the cost of transmission and distribution. The actual value

Previous Page Blank

will vary from one location to another and from one option to another at the same mill. The factors that influence the actual average price paid under an avoided cost pricing scheme include the following:

- Number of days exporting in each season
- Number of hours exporting at peak, shoulder, and base periods in each season
- Peak period availability
- Baseload period availability

Depending on the location of an independent producer within the distribution system and the proximity to end-users of the generated power, the average value, in terms of avoided cost, of reliable year-round operation in Maharashtra lies between Rs 0.96 and Rs 1.60 per kWh. In Tamil Nadu, the corresponding range is from Rs 1.69 to Rs 2.46 per kWh. The substantial variance between the figures for the two states, as explained in the next chapter, is due to the different demand patterns and generation capacity mixes in their utility systems.

3.2.2 Power Generation and Export

The following table contains the electric output and fuel consumption characteristics for the most promising cogeneration systems at each of the mills. These parameters, combined with the prices of exported power and purchased bagasse and coal, form the principal bases of revenues and operating costs.

TABLE 3.1: POWER GENERATION AND EXPORT

	ARUNA SUGARS	THIRU AROORAN	VSSK, SANGLI
Generated Power, MW			
Season	40.5	26.4	19.44
Off-Season	53.3	25.5	19.44
Net Exportable Power, MW			
Season	34.0	21.4	12.04
Off-Season	51.3	23.5	17.44
Energy Generated, MWh/Yr.			
Season	199,260	161,658	93,312
Off-Season	166,296	48,960	41,990
Total	365,556	209,578	135,302
Energy Exported MWh/Yr			
Season	167,280	130,968	57,792
Off-Season	160,056	45,120	37,670
Total	327,336	176,088	95,462
Operating Days			
Season	200	255	200
Off-Season	135	80	141
Fuel Consumed Tonnes/Yr			
Bagasse (@Rs 84/Tonne)	391,140	276,675	385,600*
Lignite (@Rs 560/Tonne)	348,200	110,170	-
% Energy from Bagasse	45.7	65.4	100

* Includes 16,000 Tonne purchased bagasse @ Rs 280 per Tonne

The parameters above are taken from the technical characterizations in the previous chapter. For simplicity, they represent perfectly reliable operation during the scheduled days of operation, which exclude scheduled maintenance. For purposes of the financial analysis, an availability factor of approximately 90% (92.5% during peak electric demand periods and 87.5% offpeak) was chosen to take the risk of forced outage appropriately into account. More engineering detail on each of the systems appears under the corresponding option number in Appendix A.

3.2.3 Project Cost Assumptions

Since a low-cost waste product is used as fuel, and cogeneration requires little additional labor at the mill, a large element of the cost of cogeneration involves amortization of the initial capital investment. The table that follows illustrates the components of the required investment in the proposed systems, based on engineering estimates.

TABLE 3.2: PROJECT COST ASSUMPTIONS
(Million Rupees)

	ARUNA SUGARS	THIRU AROORAN	VSSK SANGLI
1. Boiler House	182.01	133.39	133.39
2. Water Treatment	9.61	9.06	9.04
3. Turbine Generator Set*	309.52	238.02	217.32
Subtotal	501.14	380.45	359.75
4. Cooling Tower, Mechanical	75.17	57.06	53.96
5. Electrical and Civil	200.45	152.18	143.90
Subtotal	776.76	589.69	557.61
6. Contingency @ 5%	38.83	29.48	27.88
TOTAL	815.59	619.17	585.69
Salvage	(71.00)	-	(83.00)
NET TOTAL	744.59	619.17	502.69

* Includes 55% FOB import duty.

In the cases of Aruna Sugars and Thiru Arooran, twenty percent was added to the capital cost in the financial analysis to account for project development and system installation costs. VSSK Sangli was treated without the 20% addition because of the its relatively poorer projected economic performance, and no information on the salvage value of equipment that would be replaced was available for Thiru Arooran. Note that the boiler and turbine-generator set together represent over half of the cost.

3.2.4 Project Financial Structure

The CANEPRO model requires that certain assumptions be specified to reflect such financial considerations as inflation, exchange and tax rates, as well as credit terms available to the investor. The main assumptions appear below.

TABLE 3.3: PROJECT FINANCIAL STRUCTURE

Source of Financing	Fraction of Investment	Interest Rate	Grace Period (years)	Term (years)
Equity (Reserve)	10%	--	--	--
Sugar Development Fund	40%	9%	7	8
Indian Development Financing Institution Loan	50%	19%	0	7

Project life = 20 Years
Inflation = 9% per year
Exchange rate = Rs 28 per US$
Tax rate = 55% (except VSSK)

Return on equity (reserve) = 25% per year
Availability factor = 90%
Depreciation: 25% declining balance

The cash flow analysis presented later in this chapter calculates the average sale price for power exported to the utility that the mill would have to receive to earn a twenty five percent return on equity (sometimes termed "reserve" in Indian parlance). Two cases are reported: one involving no debt and another reflecting the most favorable loan terms that a developer might be able to expect (described in Table 3.3). In the latter case, the Sugar Development Fund would provide a deferred payment loan at substantially less than market interest. Some participants at the November, 1992 workshop questioned whether the amount available to any individual mill from the fund would be sufficient to cover forty percent of the cost of a cogeneration system, so the "leveraged" case represents the optimistic extreme.

For the two privately owned mills, the analysis embodies standard corporate tax and heavy industry depreciation rates. Certain renewable energy investments qualify for significantly accelerated depreciation, but these two mills would use appreciable amounts of lignite as a supplemental fuel and thus would be unlikely to qualify fully, if at all, for the favorable treatment. VSSK Sangli, as a cooperative enterprise, pays little if any corporate tax, so their assumed tax rate is zero. Without taxes, depreciation has no effect on that mill's cash flow.

3.3 Financial Results

Table 3.4 summarizes the financial performance of the three systems under the assumptions outlined above. As shown in the table, the mills in Tamil Nadu could export power at prices well under the utility avoided cost in that state, while power from the VSSK Sangli mill would be more costly and would have to compete with a lower avoided cost in Maharashtra. Even so, the cost would be well below two Rupees per kWh.

TABLE 3.4: FINANCIAL PERFORMANCE SUMMARY

	ARUNA SUGARS	THIRU AROORAN	VSSK, SANGLI
POWER EXPORT			
Average MW	41.0	23.0	13.9
GWh per Year	295	166	89
COSTS Initial Investment			
Total (Million Rs)	894	675	515
Rs per Avg. Watt	21.8	29.3	37.1
Operating			
Million Rs per Year	205	101	51
Rs per kWh	0.69	0.61	0.58
BREAKEVEN PRICES (Rs/kWh)			
100% Equity	1.49	1.59	1.93
Leveraged Financing	1.26	1.29	1.65

The differences in performance illustrate the effects of scale economy, which accounts for much of the difference between Aruna Sugars and Thiru Arooran, and the value of available supplemental fuels to support all-season operation, the shortage of which explains the relatively higher breakeven price for VSSK Sangli. At the November, 1992 workshop, participants suggested that the VSSK case might be improved by designing the system not to generate power year-round, but to do so only during the cane crushing season and a few weeks thereafter until the beginning of the monsoon, when hydropower again becomes available to the State Electricity Board, and water pumping is no longer required for land irrigation. This would employ the limited available bagasse fuel in such a way as to provide maximum capacity support to the utility.

In order to show the effect of power purchase price on the rate of return on investment, the ROI was calculated for each mill for several different price values. The results of these computations (assuming 100% equity) are shown in Figure 3.1.

Finally, Table 3.5 illustrates the performance of the two additional design variations proposed by Thiru Arooran management to correspond to alternative projected future mill requirements. The variations reflect cane crushing rates of 3,000 Tonnes per day and 5,000 Tonnes per day. These options appear somewhat less attractive than the original one at this mill due to the use of a number of small turbines and redundant boilers.

FIGURE 3.1 RETURN VS. POWER PURCHASE PRICE

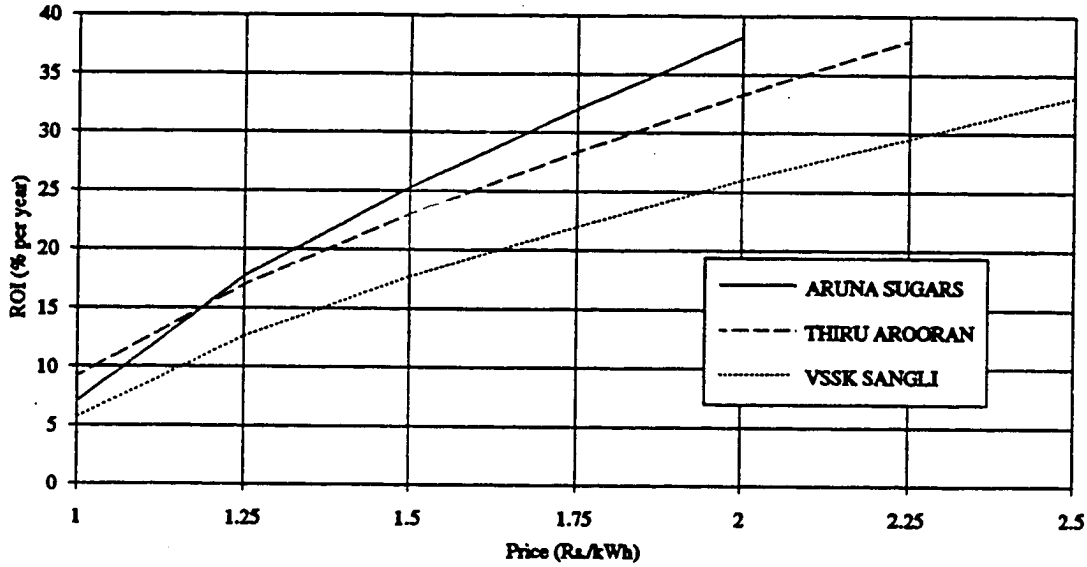

TABLE 3.5: FINANCIAL PERFORMANCE OF THIRU AROORAN VARIATIONS

	3,000 TCD	5,000 TCD
POWER EXPORT		
Average MW	6.4	17.6
GWh per Year	46	126
COSTS Initial Investment		
Total (Million Rs)	398	1,088
Rs per Avg. Watt	62.2	61.8
Operating		
Million Rs per Year	34	116
Rs per kWh	0.74	0.92
BREAKEVEN PRICES (Rs/kWh)		
100% Equity (Reserve)	2.54	2.73
Leveraged Financing	1.91	2.09

4.0 PRICING OF POWER SALES BY COGENERATORS

4.1 Introduction

4.1.1 Background

The Government of India (GOI) has indicated that the projected growth in managed demand during the Eighth Plan (1992-97) is 48,000 MW. Of this amount, the public sector can at best finance 24,000 MW, leaving a supply deficit of 24,000 MW based upon managed demand.

For these reasons, the GOI has recently signaled its interest in private investment and operational participation in the power generation sector. Additional capital, technical, and managerial resources from the private sector, it is hoped, will avert or otherwise greatly alleviate potential shortfalls in electricity supply.

Private sector participation in electricity generation can potentially take several forms, including:

1. Large power projects (e.g., coal, oil, gas, lignite), selling to an SEB, a private utility and/or directly to final users. These potentially include planned projects that are identified in the least-cost plan and are solicited from the private sector.

   Such projects also include unsolicited but large power projects that are intended to be consistent with the least-cost supply plan for the sector. Power projects built to primarily serve large industrial estates fall in this category as well.

   For this category of power transactions, the GOI has indicated that price regulation will take the form of a "two-part tariff."

2. A second category of transactions involves the sale of surplus power to the grid by small to medium-size independent power producers (IPPs) that are not identified explicitly in the least-cost plan, but that have access to an economic resource on-site (e.g., hydro, peat, agricultural residue, by-product wastes, wind) and that is broadly consistent with the resource development strategy for the sector.

   A subset of this category of potential power transactions is the sale of excess power by cogenerators.

This report is concerned with the latter category of power transactions in the specific context of the sugar industry.

More specifically, the objectives of this chapter are 1) to apply an appropriate framework and method for pricing potential power sales by cogenerators in the sugar industry, based on utility avoided costs; and 2) to estimate appropriate power purchase tariffs for sugar mills situated in the service areas of the Tamil Nadu Electricity Board (TNEB) and the Maharastra State Electricity Board (MSEB).

4.1.2 Organization Of Chapter

This section is organized as follows. Section 4.2 identifies the types of power transactions of interest within a market for excess power made available for sale from sugar mill cogeneration plants. Following this, the chapter discusses the appropriate pricing framework and recommended method for estimating purchase tariffs. Section 4.3 describes the analysis using the recommended approach in the case of Tamil Nadu. Section 4.4 contains a comparable analysis of Maharastra.

4.2 Pricing Framework

This section identifies the types of power transactions that can arise in the context of a market for excess power supply from cogenerators . Within the context of the cogeneration power market, the following transactions have been identified -- following discussions with TNEB and MSEB -- as being potentially relevant. These are:

- **Direct sale to the grid.** This transaction involves a cogenerator (sugar mill) selling excess power to the SEB grid under a contractually agreed price and under terms stipulated in the power purchase contract between the SEB and the mill owner(s).
- **Wheeling.** This transaction requires the SEB to transmit ("wheel") the cogenerated power for simultaneous delivery at another location. The delivery could be to a "sister concern" of the seller or to a third party.

  The utility charges a transmission (wheeling) charge, whereas the final purchaser of the electricity pays the sugar mill directly for the power at the agreed price.
- **Banking.** This transaction involves a cogenerator selling its excess power to the SEB for withdrawal for its own use at a later time.
- **Banking plus wheeling.** This transaction is a variant of the banking concept noted above in that payback of the banked energy involves wheeling the power to a delivery point different from the point of injection. Delivery could be to a "sister concern" of the sugar mill or to a third party.

Efficient power purchase tariffs for direct sales to the grid are relatively easier to establish than tariffs for the other transactions listed above, and direct sales to the grid comprise over 99 percent of transactions in established power markets worldwide.[23] In addition, tariffs for direct purchase are based upon economic principles and methods that have gained increasing acceptance over the years.

By contrast, setting wheeling tariffs is more complex, and the underlying principles are still a matter of considerable discussion and debate. Even more importantly, transmission access (i.e., the use of a utility's grid by other parties) is a highly contentious issue and one that goes to the heart of a fundamental question: how best to organize the power sector. In particular, should the functions of generation, transmission, and distribution be vertically disintegrated, and who has the ultimate responsibility for meeting consumer load?[24]

The concept of banking has traditionally found limited application in power markets worldwide. In the instances where it exists, banking has been utilized in bulk power markets in situations involving inter-utility diversity exchanges (e.g., to "firm-up" hydro energy in one season by "storing" it on another utility's thermal energy capability).

A problem with the present "kWh banking" scheme in Tamil Nadu is that for each kWh injected to the grid, the supplier can receive 0.8 kWh back. This is true irrespective of the time of day when the original kWh was banked and the time of day when withdrawal takes place, even though the economic cost of generating and supplying electricity, and therefore the value to the grid of any purchases, varies by time-of-day.

However, given the prevailing institutional and operating environment in India's power sector, a case can be made for all of the power transaction categories identified above for reasons other than economic efficiency. For this market to develop, at least initially, it will be necessary for the SEBs to encourage prospective suppliers. If such suppliers are not forthcoming under a direct sale transaction, but could be available under

---

[23]The largest cogeneration power market is in the U.S. This market has developed essentially since 1980. Wheeling access and pricing are two of the major unresolved issues being debated today by regulators and the various stakeholders. Whatever little wheeling does exist today is to a neighboring utility, and not to third-party end-users.

[24]In the recently organized "UK model" which represents complete vertical disintegration, the grid functions as a common carrier, with the responsibility of meeting final consumer load falling entirely upon the distribution companies who must contract for sufficient power supplies with generation companies and with the grid to ensure the transfer of power. Under such a model of power sector organization, the issue of transmission access is largely one of pricing.

By contrast, under the "U.S. power sector model," where access to the generation market has been substantially decontrolled in recent years to make that market more competitive, the responsibility for meeting the final customer loads rests upon the utility which also runs the bulk power grid. Here the case for transmission access is less clear. In the U.S. situation, it is difficult to make strong efficiency arguments in favor of mandatory access and wheeling.

some other type of transaction structure -- wheeling, banking, etc. -- then the pricing principles discussed later in this chapter should still be applicable.

Specifically, in the Indian context one could argue that the risk of non-payment by the SEB circumstances favors wheeling and banking/barter. While both TNEB and MSEB are generally acknowledged as being among the select few of the best-run SEBs in India, nevertheless private sugar mills may be reluctant to install cogeneration because of perceived risk of non-payment or delayed payments by the SEB. Project financing under such conditions will be difficult as well.

Under the new policy and under the amended Electricity Supply Act, generators can sell electricity directly to third parties with State Government approval. Third-party sales, if properly structured offer the potential for efficiency gains by enabling the more efficient use of capital.

4.3 Estimating Avoided Cost

One way to establish the value of power generated by independent producers is to estimate the "avoided" costs from the perspective of the utility. These are the costs of generation, transmission and distribution, as well as fuel, that the power company no longer needs to incur by virtue of the operation of the independent source. This section briefly describes alternate methods for estimating these avoided costs.

4.3.1 Avoided Energy Cost

Avoided energy costs represent incremental fuel and other variable O&M costs of the generation displaced by the purchase. These costs, in any hour, are the incremental fuel and other variable expenses saved by backing down the next generating "unit at the margin". This unit that would be backed down may be the most expensive unit running at the time . Alternatively, and depending on the operating environment and other factors and considerations such as area control, reactive load support, etc., the avoided energy cost may be a weighted average of two or more units whose loading levels have to be adjusted as a consequence of the power purchase.

4.3.2 Avoided Generation Capacity Cost

For estimating avoided cost for generation capacity, the following methods have been cited and/or used in various studies.

- Peaker method
- Proxy unit methods
- Differential revenue requirements method
- Cost of bulk power purchase method.

These methods are reviewed below.

4.3.2.1 Peaker Method

The "peaker method" is rationalized on the basis that the least-cost means of securing added capacity is a peaking unit, such as a gas turbine, which has a low capital and high operating cost. By comparison, other types of generation plants are built at higher capital costs to derive energy savings and lower operating costs. The annualized cost of a peaking unit -- adjusted for reserve margin and losses, and appropriately discounted from the year of first need to today -- is the marginal cost of generation capacity. The following equation captures this calculation:

Marginal Generation Capacity = [(K) (1 + RM/100)/(1 - SL/100)]
Cost (Rs/coincident kW/yr)

where K	=	Annualized cost of peaking unit (Rs/kW/yr)
RM	=	Planning reserve margin (%)
SL	=	Station losses (%)

This cost (in constant prices) is discounted from the first year in the future when the need for new capacity is anticipated and then adjusted upwards for incremental fixed O&M expenses, as well as any downstream losses up to the point of delivery. Finally, this cost can be allocated to different time periods (e.g., peak and off-peak). A common allocation method is on the basis of the contribution of each rating period to the annual loss-of-load probability (LOLP).

4.3.2.2 Proxy Unit Methods

This class of methods pegs avoided costs to the cost of a specific generating unit that is judged to be a suitable proxy for the power purchase under evaluation. One choice for a proxy unit is the next actual unit that is to come on-line. If several different plants are coming on-line within a short period, then one of those could serve as the proxy unit; alternately, avoided cost can be estimated as the average of avoided costs calculated individually for each of these units. In the event that the utility is not planning to build any capacity for the foreseeable future, or even if it is, but none of the committed plants is judged to be a suitable proxy, then one may select a generic representative plant -- e.g., a plant that the utility may build -- as a proxy.

Once a proxy plant is identified, then avoided capacity costs are estimated as the capacity cost of the proxy plant, adjusted as appropriate. For example, if the proxy unit selected happens to be a coal plant, then it is appropriate to allocate some of the capacity cost to variable cost, the rationale being that baseload plants which are higher capital cost but lower fuel cost (compared to other plants) are built primarily for energy production at lower total cost. For meeting capacity requirements, the utility has other lower-cost options available.

One way of adjusting the capital cost of a coal plant is to subtract the capital cost of a combustion turbine. In this case, the avoided capacity cost is pegged to a

combustion turbine, since that is generally the least-cost option for meeting fuel capacity requirements. The remainder of the coal plant's capital costs are allocated to avoided energy costs.

In the previous example of a coal plant, an alternate rationale for allocating plant capital cost is sometimes used. The theoretical line of reasoning under this approach is that a 1 kW power purchase (from the cogenerator) results in delaying the on-time date of the coal plant, resulting possibly in additional fuel costs as a result of having to delay a more fuel-efficient plant that will come on-line later. For example, if the next plant is a 200 MW baseload coal unit expected to come on-line in 1995, then its annualized cost discounted to the present less any increase in fuel cost is an estimate of avoided capacity cost.

4.3.2.3 Differential Revenue Requirements Method

In contrast to the two methods noted above, the differential revenue requirements method requires the use of a sophisticated optimization package for generation expansion planning.[25] Specifically, three "model runs" are required as follows. Run-1 corresponds to optimizing the system generation expansion plan to the base load forecast. Model Run-2 reoptimizes the system expansion plan with the peak load forecast used in Run-1 incremented by the equivalent of one year's load growth. Finally, Run-3 is a production simulation[26] to estimate the fuel costs associated with the load forecast used in Run-1, but unit stagings determined in Run-2. Then, the Long Run Marginal Cost (LRMC) for generation capacity is estimated by calculating the following quantity:

$$[(CR_1 - CR_2) + (FC_3 - FC_1)]/D$$

where CR_i is the capital investment associated with model run i (i = 1, 2, 3). FC_i is the fuel (production) cost associated with the expansion plan model run i, and D is the megawatt incremental difference in peak load between runs 1 and 2. The formula calculates savings in capital expenditures for generation system expansion as a consequence of a firm power purchase of magnitude D megawatts from the cogenerator, i.e., it represents the avoided generation capacity cost. This method is too data-intensive and costly to have been employed in this study.

4.3.2.4 Cost of Bulk Power Purchase Method

In situations where the utility can buy capacity on a long-term contract basis from a neighboring utility, other members of a power pool, or from some other source, the purchase cost of that capacity may be an appropriate basis for establishing avoided

---

[25] e.g., International Atomic Energy Agency's WASP model for optimal generation expansion planning.

[26] e.g., WASP in a "pre-specified pathway" mode.

generation capacity cost. In the context of TNEB and MSEB, such purchases are made on a long-term contract basis from the National Thermal Power Corporation (NTPC) at Rs 0.63/kWh.[27] The NTPC purchase price may not be an accurate reflection of avoided costs. One reason is that the NTPC price is more akin to average embedded costs rather than forward looking marginal costs, which are likely to be higher. Secondly, the NTPC purchase price corresponds to a baseload coal plant. This may not be a suitable proxy for the power purchase from a cogenerator. A third reason is that the NTPC purchase is unlikely to be the marginal plant in any given time period.

In this report, the peaker method is utilized for estimating generation avoided capacity costs for MSEB. In the case of TNEB, the proxy unit method utilizing a coal plant has been used in the analysis. As explained further in Chapter 3, because of the unique situation prevailing in Tamil Nadu (a more or less flat load curve), a case can be made for this approach.

4.3.4 Avoided Network Capacity Cost

The transmission and distribution (T&D) network's capacity is designed to accommodate peak demand power flows from generation to end users. Further, in a growing system, such network capacity is sized and sequenced recognizing future growth potential as well. Generally, all investment costs for T&D are allocated to incremental capacity because the designs of these facilities are determined principally by the peak kilowatts that they carry rather than by kilowatt-hours. The most frequently used approach for estimating marginal T&D capacity cost, and the one recommended in the present context, is the long-run average incremental cost (LRAIC) method.

The LRAIC represents the present value of all T&D investments over the planning horizon divided by the present value of the corresponding annual increments in peak load. This value, expressed in Rs per incremental kW, is then annualized over the life of the facilities, resulting in the annualized capacity cost, expressed in Rs/kW/year.

Separate LRAICs should be estimated for each major voltage level of the network -- e.g., very high voltage (VHV), high voltage (HV), medium voltage (MV), and low voltage (LV). If, for example, 10 MW of cogenerated power are purchased from a plant served at HV, then in the overall power flow balance it will help to serve a 10 MW load in the LV network, less LV network losses. If this is a firm power purchase contract and supply is available year round, then this purchase will avert the need to build network capacity upstream. In this case, the purchase can receive credit corresponding to the avoided cost of the VHV and HV networks. This is because absent this purchase, the utility would have to generate this power (plus upstream losses) and expand the network upstream of the plant (i.e., VHV, HV).

---

[27]Short-term purchases can be made from the members, if a surplus exists. The "pool price," for such purchases in the case of MSEB was Rs 0.72/kWh at the time of our mission (April-May 1992).

However, if the power purchase is for six months of the year (e.g., a sugar mill that shuts down off-season), then the network-related capacity credits are difficult to justify. This is because the network has to be sized for peak power flows. Therefore, the utility will have to size the VHV and HV network to provide the 10 MW of MV/LV load, even though it is for six months only.

4.4 Power Purchase Tariff: TNEB

This section develops recommendations for a tariff for TNEB's power purchases from sugar mills that install cogeneration and sell excess power to the grid. The analysis in this chapter builds upon the considerations outlined in the last section.

This section is organized as follows. Section 4.4.1 presents relevant introductory information. Section 4.4.2 contains an analysis of the avoided costs for TNEB. This establishes the basis for the power purchase tariff formulated in Section 4.4.3.

4.4.1 Introduction

The Tamil Nadu Electricity Board (TNEB) is responsible for the generation, transmission, and distribution of power in the State of Tamil Nadu. As of FY 92, it had an installed capacity of approximately 4,300 MW, and an additional 1,890 MW at its command from central sector generation resources.

In FY 91, generation to supply Tamil Nadu's load was 20,793 million kWh. Of this amount, approximately 77 percent was coal- and lignite-based, 19 percent was hydro-based, and 4 percent was supplied from nuclear.

Table 4.1 shows the installed capacity of power stations in Tamil Nadu State as of March 1992. A map showing the state-wide network and locations of major power plants is contained in Figure 4.1.

TABLE 4.1: TNEB INSTALLED CAPACITY AND GENERATION

Category	Installed Capacity (1991-92) MW	Generation (1990-91) million kWh
A. TNEB		
Hydro	1,947	3,982
Coal-Steam[1]	2,340	9,207
Gas Turbine	10	30
Wind	17	
Subtotal	4,314	13,219
B. Shared Resources		
Thermal (NTPC)	587	2,851
Lignite (Neyveli)	943	3,906
Nuclear (Kalpakkam)	360	794
Other	--	23
Subtotal	1,890	7,574
Total	6,204	20,793

[1] Ennore (470 MW), Tuticorin (630 MW), Mettur (840 MW), Tuticorin Stage III (420 MW).

TNEB serves over 7 million customers. In FY 92, it had billed sales of 15,765 million kWh. Table 4.2 shows the distribution of these sales by consumer segments. The system-wide average total realization -- excluding inter-state sales in 1991-1992 -- was Rs 0.99/kWh.

FIGURE 4.1: POWER SYSTEM OF TAMIL NADU

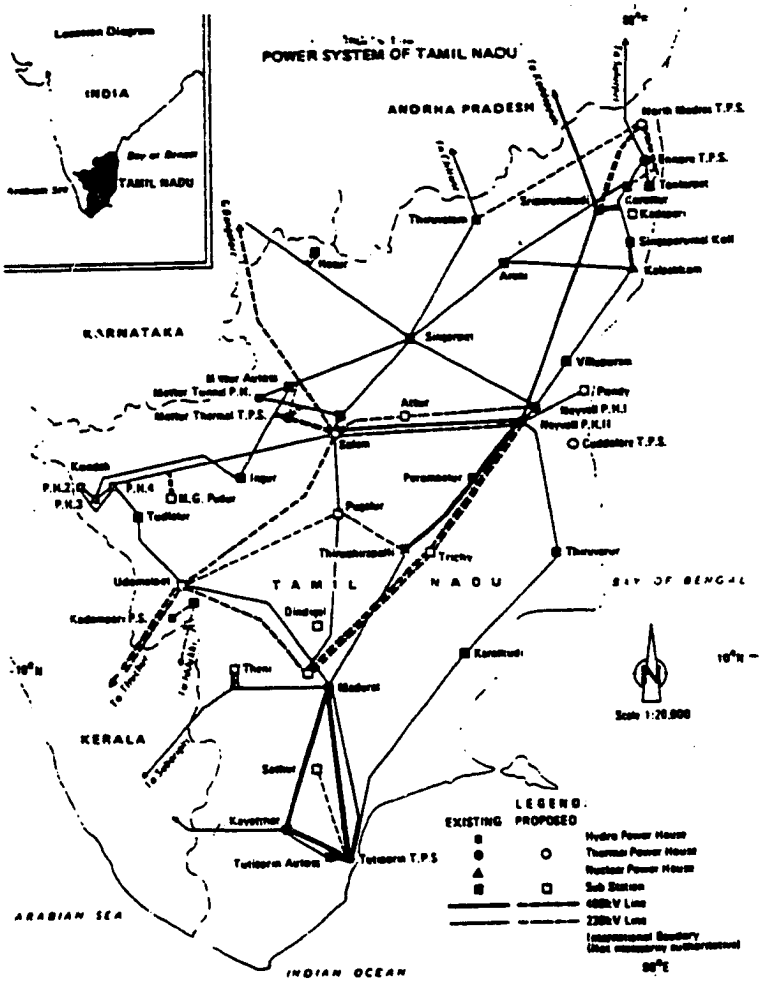

TABLE 4.2: BILLED SALES (1991-92)

Consumer Segment	Billed Sales (Million kWh)	Share (%)
Domestic	2,562	16.3
Commercial	1,355	8.6
Industry	7,095	45.0
Agriculture	3,200	20.3
Railways	378	2.4
Public Works	232	1.5
Street Lighting	215	1.4
Bulk Supply to Licenses	482	3.1
Other	246	1.6
Total In-State Sales	15,765	100
Inter-State Sales	111	--
Total TNEB	15,876	--

Source: TNEB

Figure 4.2 shows the evolution of TNEB's peak day system load curve for the last five years. The system generally peaks around 8 pm. However, the load shape is very flat, with a plateau that lasts from 6 am until about 8 pm in the evening. This situation has resulted from managing loads. For example, the entire agriculture segment has been divided into two groups. Group 1 receives power only between 6 am and 12 pm, and between 10 pm to 6 am; whereas Group 2 receives service, only between 12 pm and 6 pm and between 10 pm and 6 am.

FIGURE 4.2: PEAK DAY SYSTEM LOAD CURVES

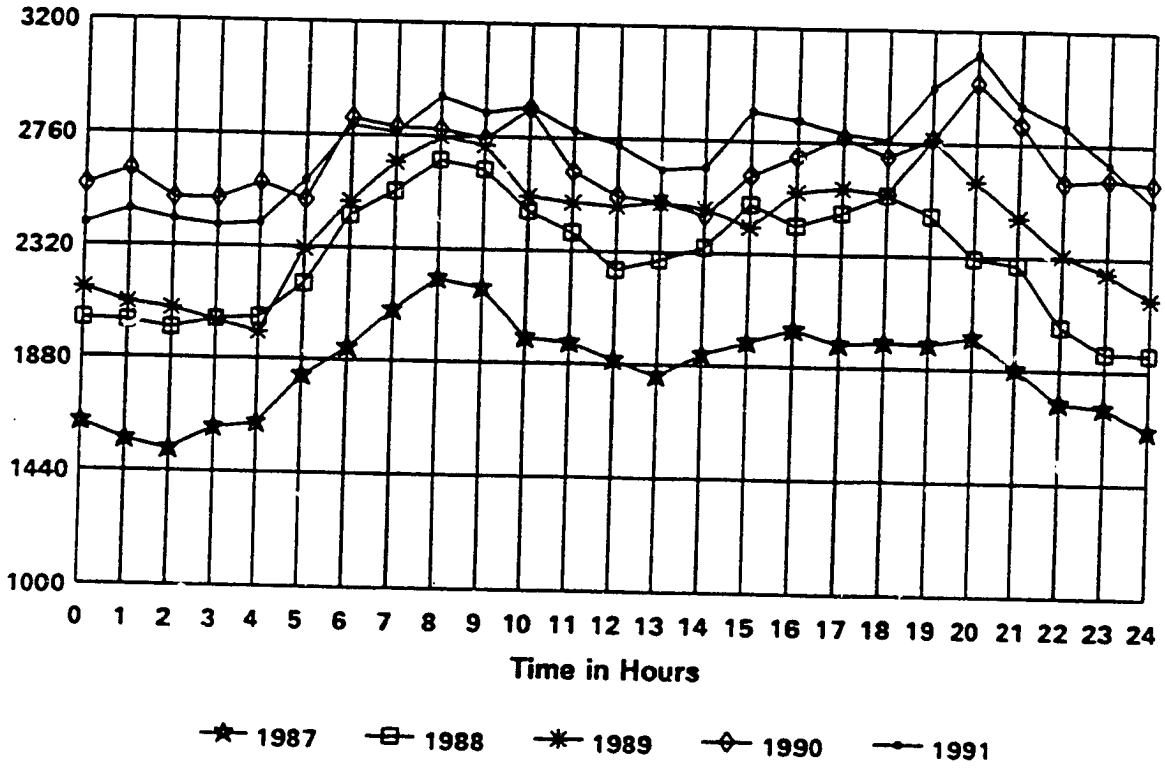

Figure 4.3 shows typical dispatches for two recent days: a weekday and a Sunday. The bulk of the power requirements are met by thermal generation from TNEB's plants and from its share of other resources, with the quick-response hydro units used in a load-following mode.

FIGURE 4.3A: TYPICAL DAY DISPATCH: WEEKDAY
(April 8, 1992)

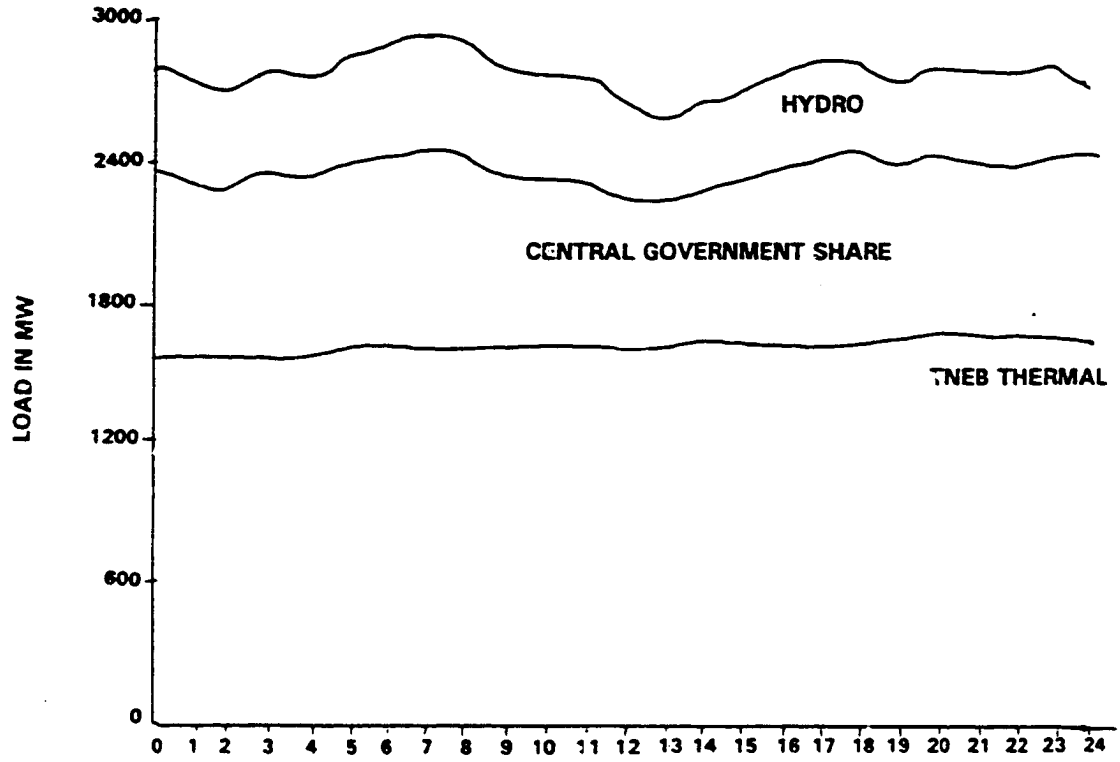

FIGURE 4.3B: TYPICAL DAY DISPATCH: SUNDAY
(April 9, 1992)

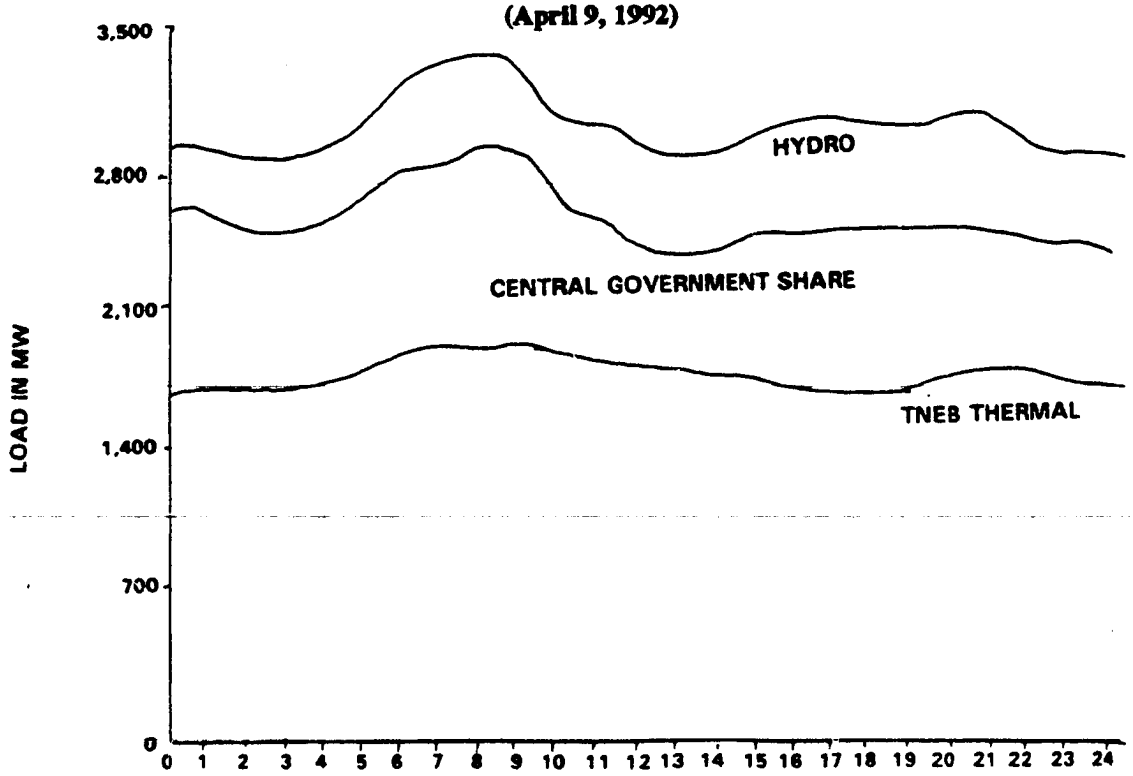

TNEB is a member of the Southern Region Electricity Board (SREB), together with the Electricity Boards of Andhra, Karnataka, and Kerala. The SREB functions more or less as a coordinating entity for its members. It does not have dispatch authority over the generating plants of the member SEBs. It would be fair to say that the region as a whole does not operate on a least-cost regional dispatch mode. Essentially, each SEB attempts to optimize dispatch and operations of its generation plant to meet its load.

Inter-state power flows are largely contractual power flows from shared resources. In addition, there are some power flows from surplus to deficit regions. However, these transactions are viewed less as economic transactions, and more as being a "good neighbor" and "lending a hand." The implication of this mode of operation for this study is that for the purposes of the avoided cost analysis of TNEB, it is sufficient to focus attention on the TNEB power system and not consider the regional system.

TNEB's generation expansion plan though the year 2000 is shown in Table 4.3 The major capacity additions are baseload steam plants (coal and lignite). In addition, two gas turbine units are planned. Of these, the 3 x 100 MW units at Nallur are expected to utilize natural gas from the Cauvery basin. In addition to its own expansion plan, TNEB expects to get a 700 MW share of various central sector projects planned for commissioning in the Eighth Plan period.

TABLE 4.3: TAMIL NADU GENERATION EXPANSION PLAN (MW)

Year	Coal-Steam	Lignite-Steam	Gas Turbine	Windmill
93-94	420 - North Madras (NMTPP); Stage I		4 x 30 Basin Bridge	20
94-95	210 - NMTPP; Stage I			20
95-96				20
96-97			3 x 100 Nallur[1]	30
97-98	250 Srimushnam[1] (M/S SWAMY)			20
97-99		500[2] Jayakonda		20
99-00	500 NMTPP; Stage II			20
00-01	500 TTPP; Stage IV[2]			20
01-02				20

Source: TNEB

[1] Private sector

[2] May be offered to private sector subject to Board Approval

In spite of all the projected TNEB plant additions, the state potentially faces marginal shortages in energy and large peaking capacity deficits in the coming years.[28] The Government of Tamil Nadu has therefore started promoting private sector participation in the State's power development program. Units allocated to the private sector as well as those potentially earmarked for the private sector are identified in Table 4.3.

4.4.2 Analysis Of TNEB's Avoided Cost

This section develops estimates of TNEB's avoided cost (LRMC). The approach utilized is to update, adjust, and/or otherwise adapt as appropriate, key data inputs used in other studies undertaken recently.[29] [30]

4.4.2.1 General Approach

In the case of TNEB, it is possible to rationalize two approaches for estimating avoided cost. Briefly, these are:

- Proxy unit method based on a coal plant
- Peaker method.

The rationale underlying the coal plant proxy unit approach is that at present, the bulk of the system capacity and energy is supplied by these plants. Whereas hydro generation is significant, provides load following capability at the margin, and is at the margin in the dispatch merit order, its value (opportunity cost) is determined by the economic cost of the alternative resource available for expansion. This alternate resource can be viewed as coal-fired generation.

The rationale underlying the use of the peaker method is (even though at present TNEB does not have this type of capacity to any significant extent) that it is part of the generation expansion plan (Table 3-6) in the near and mid-terms.

Furthermore, it could be argued that the present generation mix is not optimal: today, the TNEB system has fewer peaking units than desirable. For example, a review of typical-day plant dispatches indicates that TNEB's thermal resources are operated flat-

---

[28] Asian Development Bank, *Second North Madras Thermal Power Project*, Appraisal Report LAP: IND 18181, August 1990.

[29] London Economics, in association with Environmental Resources Ltd., Kennedy & Danking, IGDIR, and RCG/Hagler, Bailly, Inc., *India: Long Term Issues in the Power Sector*, final report submitted to World Bank, May 1991

[30] Sanghvi, A.P. and R. Bandaranaike, *Long-Term Issues in the Power Sector: Analysis of Demand, Investment, and Efficiency Effects of Distortion in Retail Electricity Tariffs*, final report submitted by RCG/Hagler, Bailly, Inc. to USAID/Washington and World Bank mission, New Delhi, May 31, 1991

out on a daily basis. By contrast, load following duty appears to be allocated to hydro (as it should) and to the central sector resources. The central sector resources are primarily NTPC's large coal-fired plants (e.g., Ramagundam) that operated efficiently when functioning in a baseload mode without having to be ramped up and down for load following.

For the purposes of the analysis in this report, the coal unit proxy plant method has been utilized. As noted earlier in Section 4.3.2.2, under this method, the capital cost of a coal plant must be allocated to the avoided capacity and avoided energy components of the avoided cost calculations. For this purpose, we have used the capital cost of a peaking unit (gas turbine) as the avoided capacity cost, and assigned the balance of the coal plant's capital cost to the avoided energy cost. These calculations are presented in the following pages.

4.4.2.2 Avoided Capacity Cost

Table 4.4 lists the key input assumptions for estimating the cost of "pure capacity support." The resultant cost is $4.69/ckW-month, where ckW represents kilowatts that are "coincident" with peak demand.

TABLE 4.4: GENERATION AVOIDED CAPACITY COST: KEY ASSUMPTIONS FOR COMBUSTION TURBINE (1992 $)

Capital Cost ($/kW)	325
Life (years)	15
Reserve Margin (%)	10
Discount Rate	0.12
Standard Conversion Factor	0.80
Station Use (%)	1.0
Fixed O&M Costs (%)	1.0

Source: RCG/Hagler, Bailly, Inc.

4.4.2.3 Network Avoided Capacity Cost

Unfortunately relevant data specific to Tamil Nadu and in the level of detail needed to estimate avoided capacity costs were not available from TNEB. We therefore had to rely on secondary sources.

A review of reference[31], which undertook a long-run marginal cost analysis for TNEB, revealed that the long run average incremental cost (LRAIC) estimates therein, even after updating for five years of inflation, were unrealistically low.[32] Instead, we have utilized estimates of network LRAIC developed in a recent study (see note 36) that looked at four other SEBs: Gujarat, Maharashtra, Uttar Pradesh, and Harayana. Table 4.5 identifies these estimates as well as estimates of marginal generation capacity cost that are derived from a gas turbine's capacity cost. To illustrate, the total avoided capacity cost at HT is Rs 376/ckW-mo., of which Rs 186/ckW-mo. is attributable to generation,[33] and Rs 190/ckW-mo. comes from avoided investment in the upstream network i.e., the EHT network.

TABLE 4.5: TOTAL AVOIDED MARGINAL CAPACITY COSTS (1992 Rs/ckW-Mo)[1]

Delivery Voltage	Generation Capacity	Network Capacity	Total
EHT	175	--	175
HT	186	190	376
LT	217	280	497

Source: Table 4.4 and reference 29.
[1] Exchange rate 28-to-1.

4.4.2.4 Avoided Energy Cost

Avoided energy costs -- peak and off-peak -- are determined, as rationalized earlier, by the costs of coal-fired generation -- variable and fixed -- where the fixed component represents the capital cost of a coal plant less the capital cost of a gas turbine. As a first step, therefore, the cost and key operating characteristics of a coal plant must be specified.

---

[31]Tata Energy Research Institute, *Electricity Costing and Pricing Study, TNEB,* final Report, July 1988

[32]This is also a reflection of the fact that unlike generation planning, network investment planning has not tended to receive as much attention. In addition, given limited investment resources, the bulk of the funds historically have been dedicated to generation, leaving network expansion and rehabilitation grossly underfunded.

[33]It should be noted that the estimates of network LRAICs appear low to us, based upon experience with a wide number of comparable situation resources. The LT estimate is particularly low. Furthermore, the LRAIC of EHT appears to be on the high-side relative to LRAIC for HT, although the combined LRAIC for EHT and HT is consistent with experience elsewhere.

Table 4.6 lists the key input parameters utilized in the analysis. These estimates have been developed after a review of published information, including TNEB's planning estimates. Considerable variations were found in capital costs for coal plants. For example, Table 4.7 identifies coal plant capital costs cited in six instances. Lowest among these is TNEB's estimates of $700/kW. This cost does not include a provision for interest during construction (IDC) and associated transmission.

TABLE 4.6: TNEB AVOIDED COST ANALYSIS FOR GENERATION CAPACITY: KEY ASSUMPTIONS FOR PROXY COAL PLANT (1992 $)

Capital Cost	$/kW	1,100
Life	Years	25
Fixed O&M Cost	% of capital	2.5
Station Use	%	8.0
Heat Rate	kcal/kWh	2,400
Heat Content	kcal/kg.	3,500
Economic Cost of Coal	Rs/tonne	800
Variable O&M Cost	% of fuel cost	5.0
Annual Operation	hrs/year	6,000
Discount Rate	%	12
Standard Conversion Factor	--	0.80

Source: RCG/Hagler, Bailly, Inc.

TNEB's actual cost for its recent coal plant (2 x 210 MW, Tuticorin; Stage 3) is approximately Rs 1.91 crores/MW.[34]

TNEB's second Madras Thermal Power Project (NMTPP, 1 x 210 MW) also does not provide an up-to-date basis for establishing coal plant costs today. The estimates of $700/kW in ADB's appraisal report do not include IDCs and associated transmission.[35] The highest estimate in Table 4.7 is $1,388/kW. This estimate is closer to the numbers frequently encountered in international coal plant cost comparisons.

---

[34]This plant was recently synchronized for grid operation and was constructed over the period 1987-1992. The order was placed in 1985-86. The total costs as of the third revision are as follows: Rs. 690 crores for generation plant, Rs. 24.5 crores for associated transmission, and Rs. 80 crores for coal handling. Given that these costs were bid nearby seven years ago (1985), the resulting estimate of Rs. 1.91 crores/MW is considerably lower than present-day costs for a future coal plant.

[35]As a point of comparative interest, the development cost of the 250 MW lignite plant at Srimushnam for private sector development (see Table 3-6), was recently quoted to be Rs. 800 crores. This is the developer's estimate, as released to the press in April 1992. At an exchange rate of 28-to-1, this translates to a cost of $1,143/kW.

TABLE 4.7: COAL PLANT CAPITAL COSTS

Estimate	Reference	Capital Cost	Year of Estimate	Comments
1. CEA indicative estimates	{7}	Rs. 20,000/kW ($1,081/kW)	1990-91	Unclear if interest during construction (IDC) is included, and whether associated transmission costs are included.
2. 2 x 250 MW Dahanu coal project – IBRD/ Bombay Suburban Electricity Supply Ltd. (BSES)	{4}	$1,100/kW	May 1991	Estimates include IDC, contingencies, and associated transmission costs.
3. 2 x 250 MW coal plant in the private sector	Leading Indian engineering firm engaged in power projects design and construction	Rs. 38,852/kW ($1,388/kW)	April 1992	Estimates include direct and indirect cost, 3% physical contingencies, 7½% construction overhead, training of O&M staff, and IDC based upon 5-year project construction, and 18% cost of capital.
4. 2 x 250 MW coal plant	TNEB planning estimate	2.0 crores/MW ($714/kW)	April 1992	Includes IDC, but not associated transmission. Cost of capital 15.2%.
5. Second North Madras Thermal Power Project (NMTPP/ADB) 1 x 210 MW	{1}	1.2 crores/MW ($700/kW)	August 1990	Installed cost plus contingencies. Does not include IDC (exchange rate 17.05-to-1).
6. International Energy Agency (IEA), Paris, indicative estimates	{11}	$1,100/kW	February 1992	

For this analysis, we have used a capital cost of $1,100/kW. This is based upon IBRD's appraisal of the 2 x 250 MW Dahanu coal plant[36] and is also close to CEA's indicative estimates for coal plants. Coincidentally, a recent study on the comparative costs of generation, released to the International Energy Agency (IEA), also utilizes a coal plant capital cost of $1,100/kW[37].

For estimating avoided energy costs, another key input is the cost of fuel. TNEB's current coal costs and energy production costs by station are shown in Table 4.8. Transport costs are very high, resulting in a delivered financial cost of around Rs 1,100/tonne.

---

[36]BRD, *Private Power Utilities Project for Bombay Suburban Electric Supply Ltd. (BSES)*, Staff Appraisal Report 9499-IN (IFC/T-1095), May 15, 1991.

[37]International Energy Agency. *Electricity Supply in the OECD*, document cited in "The Generation Game," *Petroleum Economist*, February 1992

TABLE 4.8: INCREMENTAL FINANCIAL COST OF COAL ENERGY PRODUCTION BY TNEB STATION (1992)

Power Station	Coal Cost (Rs./tonne)					Incremental Energy Production Cost (Rs./kWh)		
	Ex-mine	Transport	Delivery	Heat Content kcal/kg	Plant Heat Rate kcal/kWh	Fuel Cost	Variable O&M	Fuel Plus Other Variable Cost
Ennore (ETPS)	300	732	1,032	3,104	2,970	0.84	0.08	0.92
Mettur (MTPS)	300	851	1,151	3,455	2,560	0.85	0.03	0.88
Tuticorin (MTPS)	300	790	1,090	3,000	2,560	0.78	0.03	0.81

For this analysis, avoided energy costs are based upon the economic cost of coal, which was estimated to be approximately Rs 800/tonne. This is based upon Australian coal priced at $35/tonne f.o.b. and $40/tonne c.i.f., a heat content of 6,300 kcal/kg., a standard conversion factor 0.8, and heat content of Indian coal at 3500 kcal/kg.[38]

Estimates of total energy production costs for the coal plant proxy defined in Table 4.6 are shown in Table 4.9. To illustrate, the total cost of coal-based electricity at HT is Rs 1.82/kWh. Of this amount, Rs 0.69/kWh represents fuel and other variable O&M cost; with the balance Rs 1.13/kWh, attributed to recovery of fixed cost (capital, fixed O&M, depreciation, etc.).[39]

In Table 4.9, the fixed cost component is based upon the recovery of the entire capital cost of the coal plant ($1,100/kW). However, as argued above, for the purposes of estimating avoided energy costs, only a portion of this amount is allocable to energy production, whereas the rest is allocated as generation avoided capacity cost.

---

[38]By way of comparison, IBRD's appraisal report of BSES's Dahanu coal station utilizes an economic cost of Rs. 610/tonne (Rs. 167/tonne ex-mine plus Rs. 443/tonne for transport). However, the transport distances are longer for TNEB. If TNEB were prepared to buy South African coal from the Transvaal region, the economic cost may be somewhat lower. This is based upon a c.i.f. price of $35/tonne and a coal heat content of 6,688 kcal/kg. This would imply an economic cost of delivered coal of approximately Rs. 650/tonne.

[39]Estimates of avoided energy costs at busbar were escalated by line losses. These were assumed to be 5.0 percent of incoming for EHT, 4.8 percent of incoming for HT, and 11.4 percent of incoming for LT. These estimates are based upon data presented in note 36.

TABLE 4.9: COAL PLANT TOTAL ENERGY PRODUCTION ECONOMIC COST (1992 Rs/kWh)[1]

Delivery Voltage	Fixed Cost	Fuel and Other Variable Cost	Total
Busbar	1.03	0.62	1.65
EHT	1.08	0.65	1.73
HT	1.13	0.69	1.82
LT	1.29	0.77	2.06

[1] Exchange Rate: 28-to-1

Specifically, at $1,100/kW, the annualized fixed cost is $15.00/kW-mo. Of this amount, $4.69/ckW-mo. (see Table 4.6) is allocated for pure capacity support. Therefore, the balance of $10.31/kW-mo. is allocated to the avoided energy cost component. These costs are shown in Table 4.10. For example, the avoided energy cost at HT is Rs 1.47/kWh. In the case of TNEB, any time-of-day (TOD) or seasonal variation in this cost is insignificant because of the system characteristics discussed earlier in this chapter.

TABLE 4.10: AVOIDED ENERGY COST BY DELIVERY VOLTAGE

Delivery Voltage	Rs/kWh
EHT	1.40
HT	1.47
LT	1.65

4.4.3 Power Purchase Tariff

This section describes a power purchase tariff for the sale of surplus cogenerated power by sugar mills to the grid that reflects the foregoing avoided costs estimates.

For energy delivered by the cogenerator to TNEB -- peak and off-peak -- the corresponding avoided energy costs are shown in Table 4.10.

The capacity provided by cogeneration has value to the grid as well. In this connection, it has been reasoned by some that sugar mills do not operate year-round. Therefore, bagasse-cogenerated power supplies should be classified as non-firm. However, this view ignores the reality that in practice, "firm" and "non-firm" are not two discrete states that can characterize all power supplies. Rather, the degree of firmness associated with any power supply has to do with factors such as contract duration, and unit availability, reliability and dispatchability.

Sugar mills work round-the-clock in season and have a high incentive to do so. In Tamil Nadu, it is reasonable to expect that bagasse cogenerated power will be supplied

to the grid for at least 255 days a year and with a high (90 percent) availability during these months.[40] This translates to an equivalent annual availability of around 63 percent, with the power plant working round the clock in-season. To put this in perspective, these operating performance characteristics are comparable to the performance levels of many utility baseload units in India.

On this basis, one could justify an equivalent capacity value, in addition to energy payments, provided that a sufficiently long-term contract is executed. One way to estimate this capacity value more precisely is to first undertake a detailed analysis of the loss-of-load probability (LOLP) in each hour of the year. This reliability evaluation provides the basis for assessing the risk exposure to loss-of-load (i.e., inadequate capacity) at various times of the year.

An appropriate power purchase tariff depends upon the specific provisions of the purchase, e.g., contract duration, plant availability, and number of days of the year and months during which the cogeneration plant will operate. It is not feasible here to develop power purchase tariffs for all reasonable scenarios that can arise in this context. In the following, we developed power purchase tariffs for two hypothetical operating configurations as follows:

- *In-Season Operation Only*

  In this situation, a sugar mill would operate its bagasse-fired cogeneration plant solely during the sugar processing season. For the tariff analysis, this is assumed to be 255 days per year during the months of November through June. During the remaining 110 days of the year, the cogeneration plant is shut down. Furthermore, during the 255 operating days, the cogeneration plant is assumed to have an availability of 90 percent. This translates to an annual availability of 63 percent.

- *Year-Round Operation*

  In this situation, the cogeneration plant operates for 335 days of the year at 90 percent availability. During the remaining 30 days, it is shut down for maintenance. This translates into an equivalent capacity factor of 83 percent. Of the 335 operating days, it is assumed that the plant operates on bagasse for 255 days, and for the remaining 80 days it utilizes lignite. This is the configuration analyzed in the mill case studies.

4.4.3.1 Year-Round Operation

Table 4.11 identifies a power purchase tariff for year round power sale to the grid. Implementing the proposed tariff will require the installation of an energy meter. In

[40] If lignite is used as a fuel during off-season, operation can be extended to 335 days/year.

addition, there would be a demand meter to register capacity supplied to the grid during peak hours (i.e., coincident demand).

To illustrate the proposed tariff, consider a sugar mill cogenerator supplying power to the grid at HT. The supplier would receive energy payments of Rs 1.47/kWh for each unit provided on-peak as well as off-peak. In addition, under a firm contract, the cogenerator will receive -- e.g., if the power injection is in the HT network -- a maximum capacity value (generation plus network) of up to Rs 372/ckW-mo. This represents a value based upon full avoided cost (i.e., 100 percent of the long-run marginal cost), but adjusted for availability of the cogenerated power.[41] The cogenerator with year-round operation as defined above, who enters into a firm contract with TNEB, will effectively receive an average purchase price of Rs 1.69/kWh at EHT, Rs 2.08/kWh at HT, and Rs 2.46/kWh at LT.[42]

TABLE 4.11: POWER PURCHASE TARIFF FOR SUGAR MILL COGENERATION YEAR-ROUND OPERATION[1]

Voltage	Tariff Component	Units	Peak	Off-Peak
EHT	1. Energy	Rs/kWh	1.40	1.40
	2. Maximum Capacity Value	Rs/ckW[2]-mo.	171	--
HT	1. Energy	Rs/kWh	1.47	1.47
	2. Maximum Capacity Value	Rs/ckW-mo.	372	--
LT	1. Energy	Rs/kWh	1.65	1.65
	2. Maximum Capacity Value	Rs/ckW-mo.	492	--

[1] Capacity value applicable to firm contracts only. Capacity payments made all 12 months.
[2] ckW denotes coincident demand

4.4.3.2 In-Season Operation

In this mode of operation, the cogeneration plant provides power to the grid for 255 days of the year (November through May), with 90 percent plant availability. This implies a 63 percent annual availability factor. Table 4.12 defines the proposed power tariff for this mode of operation. To illustrate, a cogeneration plant feeding power into

---

[41] Of the total capacity value of Rs.372/ckW-mo., Rs. 182/ckW-mo. represents avoided cost due to the generation component, and Rs. 190/ckW-mo. is the avoided capacity cost for upstream network expenditures (Table 4-5). The generation component of Rs. 132/ckW-mo. is calculated by adjusting the long-run marginal generation capacity cost (Rs.186/ckW-mo. in Table 4.5) downwards for the lower annual availability of the cogeneration plant (83 percent) in comparison to the annual availability of the gas turbine (85 percent), which provides the basis for establishing the LRMC value.

[42] It is not recommended that the power purchase tariff be structured as an average price per kWh. These estimates are for reference and comparison purposes only. The power purchase tariff should be structured as a two-part tariff as defined in Table 3-14.

TNEB's HT network will receive energy payments of Rs 1.47/kWh for on-peak and off-peak power.

TABLE 4.12 POWER PURCHASE TARIFF FOR SUGAR MILL COGENERATION IN-SEASON OPERATION ONLY[1]

Voltage	Tariff Component	Units	Peak	Off-Peak
EHT	1. Energy	Rs/kWh	1.40	1.40
	2. Maximum Capacity Value	Rs/ckW[2]-mo.	169	--
HT	1. Energy	Rs/kWh	1.47	1.47
	2. Maximum Capacity Value	Rs/ckW-mo.	180	--
LT	1. Energy	Rs/kWh	1.65	1.65
	2. Maximum Capacity Value	Rs/ckW-mo.	210	--

[1] Capacity value applicable to firm contracts only. Capacity payments made only in-season (seven months).
[2] ckW denotes coincident demand.

In addition, under a firm contract, the cogenerator would be entitled to receive payment for capacity. To illustrate, at HT, the cogenerator can receive up to a maximum capacity value of Rs 180/ckW-mo. for each of the seven months the plant is in operation. Under this scenario, the effective capacity value expressed on a per unit energy basis is Rs 0.27/kWh. This results in an overall average price of Rs 1.74/kWh for HT. Comparable numbers for EHT and LT are, respectively, Rs 1.66/kWh and Rs 1.97/kWh.

4.4.3.3 Interconnection Costs

It is presumed in the preceding analysis that all costs of interconnection and metering will be borne by the cogenerator. In some instances the cogenerator may want TNEB to procure and install this equipment. In these instances, the initial capital outlay and labor cost for installation will have to be incurred by TNEB. If this situation should arise, these costs can be amortized over the initial contract period and collected on a monthly, quarterly, or annual basis. These costs should be shown as a separate line item, and debited against the credits due to the cogenerator for power sales made in that period.

4.5 Power Purchase Tariff: MSEB

This section develops a tariff for MSEB's power purchases from sugar mills that install cogeneration and sell excess power to the grid. Section 4.5.1 presents relevant introductory information. Section 4.5.2 contains an analysis of the avoided costs for MSEB. This establishes the basis for the power purchase tariff formulated in Section 4.6.

4.5.1 Introduction

The Maharashtra State Electricity Board (MSEB) is responsible for the generation, transmission, and distribution of power in the State of Maharashtra. It has an installed capacity of approximately 7,800 MW as of fiscal year ending 1992 (FY92). In FY92, gross generation from MSEB units was 31,362 million kWh. Approximately 76 percent of this amount was coal-fired, 14 percent was hydro-based, and the remainder was gas-based.

Table 4.13 shows the installed and derated capacity of power stations in Maharashtra State as of March 1992, by category. A map showing the state-wide network and locations of major power plants is contained in Figure 4.4.

TABLE 4.13: INSTALLED AND DERATED CAPACITY OF POWER STATIONS IN MAHARASHTRA STATE - MARCH 1992

Category	Installed Capacity (MW)	Capacity[43] (MW)
A. MSEB		
Hydro	1,294	1,149
Coal-Steam	5,625	4,556[44]
Gas Turbine	672	672
Subtotal	7,591	6,377
B. Tata		
Hydro	285	285
Thermal	1,338	1,330
Subtotal	1,623	1,615
C. GOI (Transfer - Nuclear)		
Maharashtra State	190	160
Maharashtra State Total	9,404	8,152

[43]Peaking capacity for hydro, derated capacity for thermal.

[44]Chandrapur units 5 and 6 (2 x 500 MW) went on line in March 1991 and 1992, respectively, and are in the stabilization period. They are not reflected in these figures for capacity benefits.

FIGURE 4.4 TRANSMISSION NETWORK AND GENERATING STATION COORDINATION

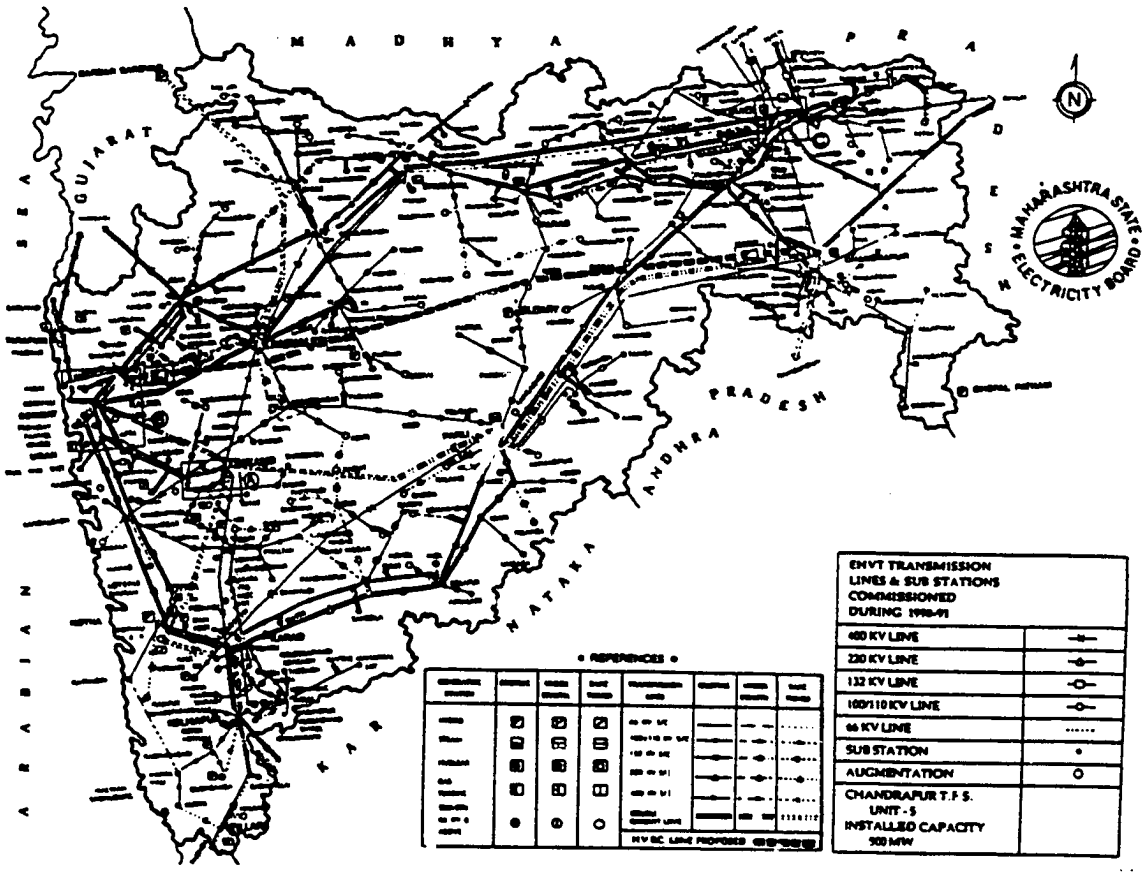

MSEB served approximately 8.3 million consumers in FY92, and had billed sales of 30,893 million kWh. Table 4.14 shows the distribution of these sales by consumer segments and the corresponding realization/tariff yield. To illustrate, the tariff realization for the agriculture segment, which represents 24.3 percent of all sales, was Rs 0.15/kWh. By contrast, the high tension industrial customer segment, which accounted for 36.4 percent of billed sales, had a tariff yield of Rs 1.60/kWh. The MSEB system-wide total realization --excluding inter-state sales -- was Rs 1.12/kWh.

Figure 4.5 shows the evolution of the peak load shape for Maharashtra during the last three years. The curve is characterized by a primary evening peak around 9:00 pm, and a secondary peak around 10:00 am. The secondary peak is about 95 to 98 percent of the primary peak.

Figure 4.6 shows the peak day dispatch for the State of Maharashtra for FY92. Quick-response hydro units are used in a load following mode, with thermal generation -- including NTPC purchase -- providing most of the remaining generation.

MSEB is a member of the Western Regional Electricity Board (WREB), which is responsible for coordinating an integrated mode of operation across the pool members: MSEB, Gujarat State Electricity Board, Madhya Pradesh Electricity Board, Goa, and

Daman and Diu. In addition, WREB coordinates power flows related to NTPC allotments to each pool member, inter-state power exchanges, and flows over inter-regional interconnections.

TABLE 4-14: BILLED SALES AND REALIZATION BY CONSUMING SEGMENT (FY92)

Consumer Segment	Billed Sales (Million kWh)	Share (%)	Realization Rs./kWh
Domestic	3,536	11.4	0.70
Commercial	790	2.6	1.52
Industry - LT	1,567	5.1	1.11
HT	11,244	36.4	1.60
Agriculture	7,506	24.3	0.15
Railways	600	1.9	1.58
Public Works - LT	140	0.5	1.11
HT	575	1.9	1.60
Street Lighting	240	0.8	0.77
Tata	3,935	12.7	1.86
Other	700	2.5	0.85
Total In-State Sales	30,893	100	1.12
Inter-State Sales	1,739	--	0.72
Total MSEB	32,632	--	1.10

FIGURE 4.5 TYPICAL LOAD DEMAND (PEAK LOAD)

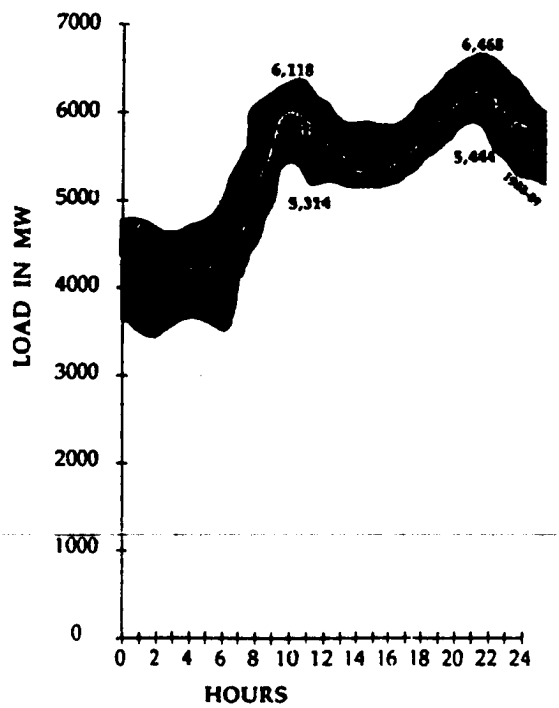

FIGURE 4.6: HOURLY NUCLEAR, HYDRO, THERMAL AND TOTAL GENERATION FOR TYPICAL WORKING DAY, JANUARY 1992

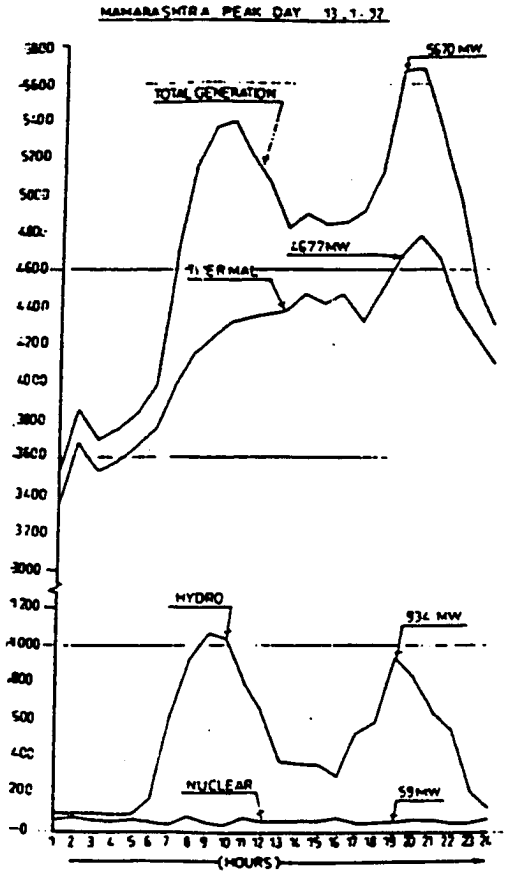

Source: MSEB

Whereas there is coordination among the members of the WREB, generation in the region as a whole is not operated in a central dispatch mode, nor do the three members operate as a "tight pool." There are some exchanges of power because of inter-system diversity in loads and flows from surplus to deficit regions.[45]

4.5.2 Analysis Of MSEB's Avoided Cost

This section develops estimates of MSEB's avoided cost. The approach utilized is to update, adjust, and/or otherwise adapt as appropriate, estimates/key data inputs used in other studies undertaken recently.

---

[45] At present and in recent years, Maharashtra has been a net surplus state. Regional load curves show that load shedding has tended to occur in states other than Maharashtra. We understand that this situation is expected to continue.

The CEA projects regional deficits to continue. In 1995 deficits of about 8 percent in energy and 17 percent in capacity are projected for the region.

4.5.2.1 Avoided Capacity Cost

To establish estimates of the avoided cost of generation capacity, the "peaker method" is employed. The method, described in Section 4.3, is appropriate for MSEB given its current supply-demand balance, mix of generating units, and projected mode of system operation in the 1992-1997 time frame.

At present, hydro generation is used in a load following mode to meet the morning and evening peaks (Figure 4.5). However, the value of hydro capacity at such times -- its opportunity cost -- can be determined by the alternate capacity resource available, absent hydro. In the case of MSEB, this resource is now the Uran gas turbine units, which have a capacity of 672 MW.[46]

As regards future system development, a review of available information[47,48] on planned generation capacity additions indicates that future demand is projected to be met by coal steam plants for baseload, peaking hydro, gas turbine expansion (through waste heat recovery) at Uran, and combined cycle gas turbine projects.

Table 4.15 lists the key input parameters utilized in the analysis (the same as in Tamil Nadu). Estimates of avoided (long-run marginal generation capacity) cost are shown in Table 4.16, and range from $5.00/ckW-mo. at EHT to $6.21/ckW-mo. at LT.[49]

Relevant current data were not available from MSEB to undertake a calculation of network avoided cost. Therefore, we have relied on a recent study that developed such estimates for MSEB (the same as was used in the case of Tamil Nadu). The estimates have been updated from 1990 to 1992 currency and are shown in Table 4.17 in terms of generation capacity avoided cost and total avoided capacity costs by voltage. To illustrate, the avoided capacity cost at HT is Rs 376ckW-mo., of which Rs 186/ckW-mo. is attributable to generation.[50]

---

[46](4 x 60 + 4 x 108)

[47]IBRD, *Private Power Utilities Project for Bombay Suburban Electric Supply Limited (BSES)*, Staff Appraisal Report 9499-IN (IFC/T-1095), May 15, 1991.

[48]IBRD, *Private Power Utilities Project for The Tata Electric Companies (TEC)*, Staff Appraisal Report 8010-IN, June 6, 1990.

[49]ckW denotes coincident kilowatt, i.e., demand at system peak times.

[50]It is relevant to reiterate the point made in note 36 in connection with the network LRAIC estimates. Good primary data on network expenditure plans were lacking then as they are now. In our judgment and experience, the network LRAICs are low in total. In particular, the LT estimate is especially low. Furthermore, the EHT estimate appears high relative to LRAIC for HT, although the combined LRAIC for EHT and HT appears to be consistent with experience elsewhere.

TABLE 4.15: GENERATION AVOIDED CAPACITY COST: KEY ASSUMPTIONS FOR COMBUSTION TURBINE (1992 $)

Capital Cost ($/kW)	325
Life (years)	15
Reserve Margin (%)	10
Discount Rate	0.12
Standard Conversion Factor	0.80
Station Use (%)	1.0
Fixed O&M Costs (%)	1.0
Avoided Cost ($/ckW-mo.) - Busbar	4.69

Source: RCG/Hagler, Bailly, Inc.

TABLE 4.16: AVOIDED COST FOR GENERATION CAPACITY (1992 $)

Voltage	$/ckW-mo.
Busbar	4.69
EHT	5.00
HT	5.32
LT	6.21

Source: RCG/Hagler, Bailly, Inc.

TABLE 4.17: TOTAL AVOIDED CAPACITY COSTS (1992 Rs/CKW-Mo.)[1]

Delivery Voltage	Generation Capacity	Network Capacity	Total
EHT	175	--	175
HT	186	190	376
LT	217	280	497

1 Exchange rate 28-to-1.

Source: Table 4.15 and 4.16 and reference 29.

4.5.2.2 Avoided Energy Costs

Estimates of avoided energy costs were developed by reviewing available information on current and projected system operations and dispatch. Table 4.18 summarizes the calculation of avoided energy costs for peak periods. The specific assumptions of relevance are shown in the table, as are the intermediate results.

TABLE 4.18: AVOIDED ENERGY COSTS ON-PEAK (Rs/kWh)

	Marginal Plant
	Gas Turbine
Fuel	Gas
Heat Input (Nm^3/kWh)	0.34
Economic Cost of Gas (Rs/1000 Nm^3)	2,300
Variable O&M Costs (% of fuel costs)	3
Station Use (% of Gross Generation)	1.0
Fuel Costs (Rs/kWh)	0.78
Variable O&M (Rs/kWh)	0.02
Station Use Losses (Rs/kWh)	0.01
Total Cost at Busbar (Rs/kWh)	0.81

Source: RCG/Hagler, Bailly, Inc.

4.5.2.2.1 Peak Period Energy Costs

MSEB's peak occurs in the morning hours of 8 am to 11 am and in the evening, between 6 pm and 9 pm. During these hours, the marginal generation is typically from gas turbines and hydro. However, as noted earlier, the opportunity cost/economic value of hydro generation is measured by the cost of gas turbine generation.

The gas consumption rate of 0.34 normal cubic meter (Nm^3)/kWh is based upon actual data from the Uran gas turbines. The economic cost of gas, Rs 2,300/1000 Nm^3, is essentially based on the concept of parity to fuel oil,[51] with the border price of fuel oil at $14/bbl. The resultant estimate of busbar avoided energy cost on-peak is Rs 0.81/kWh.

4.5.2.2.2 Off-Peak Period Energy Costs

During off-peak periods (10 pm to 7 am), MSEB's load is supplied by coal-fired plants. Theoretically, one can speak of a specific plant at the margin, i.e., use its incremental energy generation costs as the estimate of avoided energy cost off-peak. In practice, it appears that more than one plant is backed down rather than shutting off a few plants completely. This is because these plants are needed for load carrying and/or spinning reserve the next morning.[52] We have computed the avoided energy generation cost by averaging across all coal plants operating off-peak.

---

[51] ~~By comparison, the financial cost of gas to MSEB until recently was Rs. 1,601/1000 Nm^3, and the new~~ contract price is projected to be Rs. 1,807/1000 Nm^3.

Further, by way of comparison, recent IBRD reports 47, 48 have determined the economic cost of gas in the Bombay region to be Rs. 2,200/1000 Nm^3.

[52] IBRD, *India: Maharashtra Bagasse Energy Efficiency Project*, ESMAP Report 120/91.

Table 4.19 summarizes the calculation. Coal and oil consumption estimates represent actual plant-specific performance in 1990-91. Fuel cost are delivered prices to MSEB as of April 1992. The weighted average fuel cost off-peak is Rs 0.46/kWh. Allowing for a 5 percent calculation for non-fuel variable O&M costs results in a busbar avoided energy cost off-peak of Rs 0.49/kWh.[53]

TABLE 4.19: SHOULDER AND OFF-PEAK AVOIDED ENERGY COSTS

Period	Plant	Coal Consumption kg/kWh	Delivered Coal Cost Rs./Tonne	Coal Cost Rs./kWh	Oil Consumption Rs./liter	Oil Price Rs./kWh	Oil Cost Rs./kWh	Total Fuel Cost Rs./kWh	Net Generation million kwh
A. Shoulder	Nasik	0.71	730	0.52	0.0077	5.0	0.04	0.56	4,670
						Avoided energy costs = 0.56 x 1.05 = Rs. 0.58/kWh			
B. Off-Peak	Koradi	0.77	562	0.43	0.0062	5.0	.03	0.46	5713
	Bhusarval	0.72	630	0.45	0.0048	5.0	.02	0.48	3105
	Parli	0.74	696	0.52	0.0148	5.0	.07	0.59	2730
	Chandrapur	0.84	456	0.38	0.0043	5.0	.02	0.40	4235
	Paras	0.82	387	0.32	0.0093	5.0	.05	0.36	282
	K'keda	1.16	435	0.50	0.0024	5.0	.01	0.52	235
	Ballarshap/ KPKD New	0.71	435	0.31	0.0024	5.0	.01	0.32	908
						Avg. fuel cost =		0.46	17,208
						Avoided energy cost off-peak =		0.46 x 1.05	
						=		Rs. 0.49/kWh	

Source: RCG/Hagler, Bailly based upon MSEB data.

[53]The avoided energy cost analysis in Table 4-10 utilizes financial prices for fuels, of which coal is the dominant fuel. By way of comparison, a recent IBRD appraisal report on the proposed Dahanu coal station estimates the economic cost of coal delivered to the plant, to be Rs. 610/tonne (Rs. 167/tonne ex-mine, plus Rs. 443/tonne for transport). Further, that report uses a coal rate of 0.60 kg/kWh, fuel oil consumption of 0.01 liter/kWh and a fuel oil price of Rs. 2.7/liter. The latter is significantly lower than the fuel oil price used in Table 4-10. However, oil-related costs represent a very small portion of total energy costs (about 5 percent).

4.5.2.2.3 Shoulder Period Energy Costs

Shoulder hours for the MSEB system represent the nine hours from 7 am to 8 am, 11 am to 6 pm, and 9 pm to 10 pm. At these times, load following is accomplished by a combination of hydro generation in these periods and high-cost coal-fired generation. Thus, the opportunity cost of any hydro generation is the cost of coal energy. For estimating avoided energy cost during this period, it is assumed (as in note 56) that the marginal coal plant is Nasik. The total fuel cost for this plant (Table 4-10) is estimated to be Rs 0.56/kWh. With a 5 percent escalation for non-fuel variable O&M costs, this results in an avoided energy cost at busbar of Rs 0.58/kWh.

To estimate avoided energy costs by delivery voltage, (Table 4.20) the busbar estimates above were escalated by line losses. For this calculation, estimates of losses used are as follows:

	Losses as a % of Incoming		
Voltage	Peak	Shoulder	Off-Peak
EHT	6.3	5.0	2.5
HT	6.0	4.8	2.4
LT	14.3	11.4	5.7

Source: Note 36

In the preceding analysis, peak, shoulder, and off-peak periods can be identified as the following specific hours during each day:

Peak:	8 am to 11 pm, and 6 pm to 9 pm
Shoulder:	7 am to 8 am, 11 am to 6 pm, and 9 pm to 10 pm
Off-Peak:	10 pm to 7 am.

For the purpose of simplifying the power purchase tariff structure, this classification of rating periods can be collapsed into two periods as follows, where four hours of shoulder have been allocated to peak, and five hours allocated to off-peak:

Peak:	7 am to 12 pm, and 4 pm to 9 pm
Off-Peak:	9 pm to 7 am, and 12 pm to 4 pm

Table 4.21 indicates avoided energy costs for this simplified two-period classification. They are derived by appropriately weighing the energy costs in Table 4.20

TABLE 4.20: AVOIDED ENERGY COSTS BY DELIVERY VOLTAGE (Rs/kWh)

Delivery Voltage	Peak	Shoulder	Off-Peak
EHT	0.87	0.62	0.50
HT	0.92	0.65	0.51
LT	1.08	0.73	0.54

Source: RCG/Hagler, Bailly, Inc.

TABLE 4.21: AVOIDED ENERGY COSTS BY DELIVERY VOLTAGE: SIMPLIFIED STRUCTURE (Rs/kWh)

Delivery Voltage	Peak	Off-Peak
EHT	0.77	0.53
HT	0.81	0.55
LT	0.94	0.60

Peak: 7 am to 12 pm, and 4 pm to 9 pm

Off-Peak: 9 pm to 7 am, and 12 pm to 4 pm

4.6 Power Purchase Tariff

This section develops a power purchase tariff for the sale of surplus cogenerated power by sugar mills to the grid reflecting the estimated avoided cost structure for MSEB.

For energy delivered by the cogenerator -- peak and off-peak -- the corresponding avoided energy costs are shown in Table 4.21.

By similar reasoning to that applied to TNEB, power sold by sugar mills to the grid should be accorded an equivalent capacity value as well in addition to energy payments, provided that a contract of adequate duration is executed. One way to estimate this capacity value is to first undertake a detailed analysis of the loss-of-load probability (LOLP) in each hour of the year. This reliability evaluation provides the basis for assessing the risk exposure to loss-of-load (i.e., inadequate capacity) at various times of the year.

In particular, Figure 4.7 shows the normalized monthly maximum demand profile for MSEB. These data show that the load, after adjusting for growth, is lower in the five months May through September. This is largely attributable to lower load from agricultural pumpsets because of the onset of the monsoon season. As a consequence of this type of load profile, the contribution of the wet months to the total annual loss-of-load probability will be disproportionately lower than the contribution of the remaining seven months. This is simply another way of stating that generating capacity is more valuable -- in terms of reducing risk exposure to loss-of-load -- in the seven "dry months" than in the five "wet months." In fact, the relative LOLP contribution of these two

seasons to the annual LOLP provides a quantitative basis for establishing a capacity value for cogenerated power.

FIGURE 4-7: MSEB 1988 MONTHS PEAK LOADS

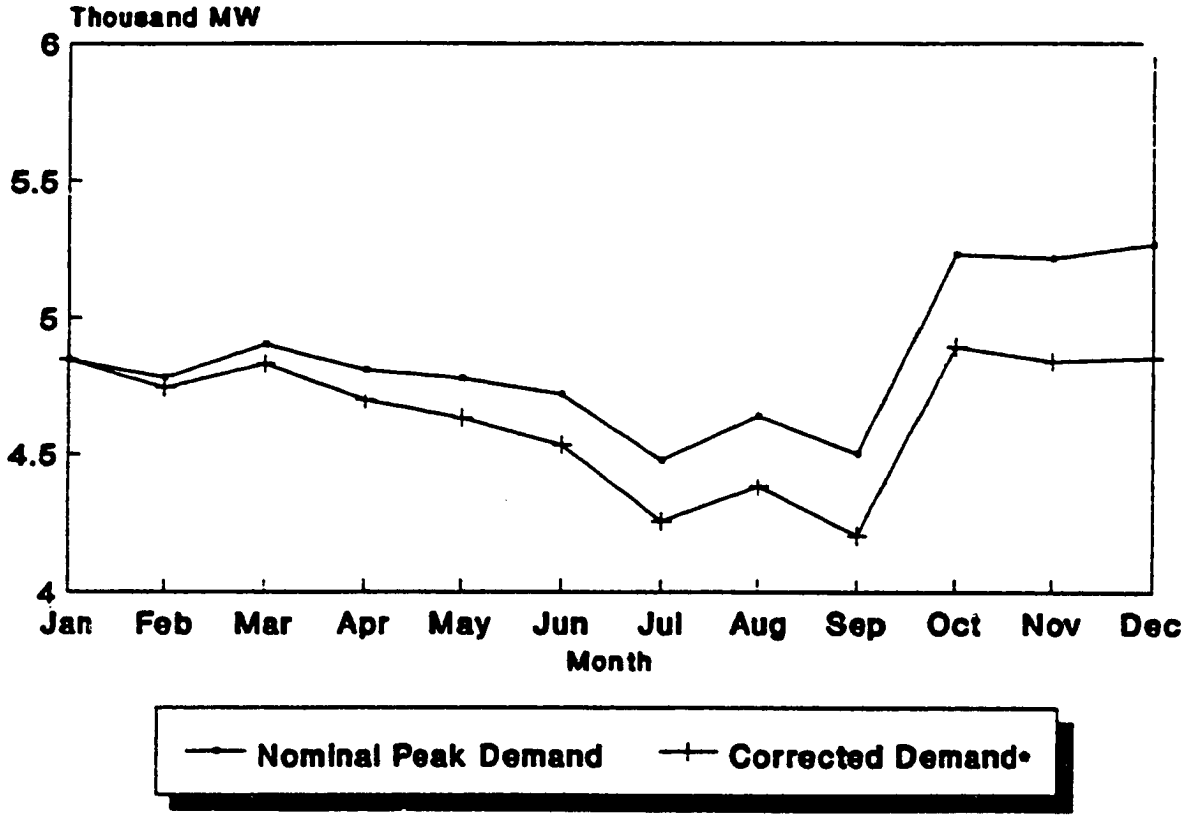

*Corrected for 9%/yr. peak demand growth

A detailed LOLP analysis was beyond the scope of this effort. Nevertheless, the concept of capacity valuation can be carried forward. However, the seven-month dry season -- essentially also the months when cogenerated power from sugar mills will be sold to the grid -- probably contributes about 75 percent to the total annual LOLP.

An appropriate power purchase tariff depends upon the specific provisions of the purchase, e.g., contract duration, plant availability, and number of days of the year and months during which the cogeneration plant will operate. In the following, we developed power purchase tariffs under two hypothetical operating configurations as follows:

- *In-Season Operation Only*

In this situation, a sugar mill would operate its bagasse-fired cogeneration plant solely during the sugar processing season. For the tariff analysis, the season is assumed to be 200 days per year during the months of November through May. During the remaining 165 days of the year, the cogeneration plant is shut down. Furthermore, during the 200 operating days, the cogeneration plant is assumed to have an availability of 90 percent.

- *Year-Round Operation*

In this situation, the cogeneration plant operates for 300 days of the year at 90 percent availability. It is assumed that the plant operates on bagasse for 200 days (November through May) and for the remaining 100 days, it utilizes bagasse stored during the sugar processing season for this purpose. During the remaining 65 days, it is shut down for maintenance. This is the configuration analyzed in the case studies.

4.6.1 Year-Round Operation

Table 4-22 identifies a power purchase tariff for year round power sale to the grid. Implementing the proposed tariff will require the installation of an energy meter that monitors separately the energy delivered to the grid during peak and off-peak hours. In addition, there would be a demand meter to register capacity supplied to the grid during peak hours (i.e., coincident demand).

TABLE 4.22 POWER PURCHASE TARIFFS FOR SUGAR MILL COGENERATION YEAR-ROUND OPERATION[1]

Voltage	Tariff Component	Units		
EHT	1. Energy	Rs./kWh	Peak	0.77
			Off-Peak	0.53
	2. Maximum Capacity Value	Rs./ckW[2]-mo.	Oct.-April	206
			May-Sept.	79
HT	1. Energy	Rs./kWh	Peak	0.81
			Off-Peak	0.55
	2. Maximum Capacity Value	Rs./ckW-mo.	Oct.-April	408
			May-Sept.	275
LT	1. Energy	Rs./kWh	Peak	0.94
			Off-Peak	.60
	2. Maximum Capacity Value	Rs./ckW-mo.	Oct.-April	535
			May-Sept.	378

[1] Capacity value applicable to firm contracts only. Capacity payments apply for all 12-months.
[2] Peak hours: 7 am to 12 pm, and 4 pm to 9 pm. Off-peak hours: 9 pm to 7 am, and 12 pm to 4 pm
[3] ckW denotes coincident demand

To illustrate, consider a sugar mill cogenerator supplying power to the grid at HT. The supplier would receive energy payments of Rs 0.81/kWh for each unit provided on-peak, and Rs 0.55/kWh for each unit provided off-peak. Under a flat output load profile, this is equivalent to a non-time differentiated payment of Rs 0.66/kWh. In addition, under a firm contract, the cogenerator will receive -- e.g., if the power injection is in the HT network -- a maximum capacity value (generation plus network) of up to Rs 401/ckW-mo. for the months of October through April, and Rs 240/ckW-mo. for the months of May through September. This represents a value based upon full avoided cost (i.e., 100 percent of the long-run marginal cost), but adjusted for availability of the cogenerated power.[54]

To continue the illustration, a cogenerator with a year-round operation, as defined previously, who enters into a firm contract with MSEB, would effectively receive Rs 0.66/kWh for each unit of electricity sold, assuming a flat daily output profile. In addition, if he were paid the maximum capacity value (i.e., full avoided capacity cost), he would in effect receive Rs 0.66/kWh, resulting in an overall average purchase price of Rs 1.32/kWh sold. The comparable overall average purchase price for LT and EHT, under the same assumption made above in the HT example are, respectively, Rs 1.60/kWh and Rs 0.96/kWh.[55]

4.6.2 In-Season Operation

In this mode of operation, the cogeneration plant provides power to the grid for 200 days of the year (November through May), with 90 percent plant availability. This implies a 49 percent annual availability factor.

Table 4.23 defines the proposed power tariff for this mode of operation. To illustrate, a cogeneration plant feeding power into MSEB's HT network will receive energy payments of Rs 0.81/kWh for on-peak power and Rs 0.55/kWh for each unit supplied off-peak. Assuming a flat profile for daily power output, this is equivalent to an average price of Rs 0.66/kWh at HT.

---

[54]These capacity values are estimated as follows, starting with the generation avoided capacity cost of Rs. 186/ckW-mo. Based upon the seasonal load shape and risk (LOLP), 75 percent of the annual generation avoided capacity cost is allocated to the seven months October through April, and the remaining 25 percent to the five months May to September. This results in generation avoided costs of Rs. 236/ckW-mo. and Rs. 112/ckW-mo. for the two seasons, respectively. The Rs. 239/ckW-mo. for October through April is further adjusted for the capacity factor of the cogenerator (.85) relative to the availability of the combustion turbine (93 percent), yielding an adjusted generation avoided capacity cost of Rs. 218/ckW-mo. for October through April. At the HT level, the avoided network capacity cost is Rs. 190/kW-mo. (Table 4-8). This yields a total avoided capacity cost of Rs. 408/ckW-mo. at HT.

[55]It is <u>not</u> recommended that the power purchase tariff be structured as a single average price. These numbers are prescribed for reference and comparison purposes only. The power purchase tariff should be structured as a two-part tariff as defined in Table 4-15.

TABLE 4.23: POWER PURCHASE TARIFFS FOR SUGAR MILL COGENERATION IN-SEASON OPERATION ONLY[1]

Voltage	Tariff Component	Units	Peak[2]	Off-Peak[2]
EHT	1. Energy	Rs./kWh	0.77	0.53
	2. Maximum Capacity Value	Rs./ckW[3]-mo.	218	–
HT	1. Energy	Rs./kWh	0.81	0.55
	2. Maximum Capacity Value	Rs./ckW-mo.	231	–
LT	1. Energy	Rs./kWh	0.94	0.60
	2. Maximum Capacity Value	Rs./ckW-mo.	270	–

[1] Capacity value applicable to firm contracts only. Capacity payments apply for in-season (seven) months of the year only.
[2] Peak hours: 7 am to 12 pm, and 4 pm to 9 pm. Off-peak hours: 9 pm to 7 am, and 12 pm to 4 pm
[3] ckW denotes coincident demand

In addition, under a firm contract, the cogenerator is entitled to receive payment for capacity. To illustrate, at HT the cogenerator can receive up to a maximum capacity value of Rs 231/ckW-mo. for each of the seven months the plant is in operation.[56]

Under this scenario, the effective capacity value expressed on a per-unit energy basis is Rs 0.35/kWh. This results in an overall average price of Rs 1.01/kWh for HT. Comparable numbers for EHT or LT are, respectively, Rs 0.96/kWh or Rs 1.15/kWh.[57]

4.6.3 Interconnection Costs

It is presumed in the preceding analysis that all costs of interconnection and metering will be borne by the cogenerator. In some instances the cogenerator may want MSEB to procure and install this equipment. In these instances, the initial capital outlay and labor cost for installation will have to be incurred by MSEB. If this situation should arise, these costs can be amortized over the initial contract period and collected on a monthly, quarterly, or annual basis. These costs should be shown as a separate line item, and debited against the credits due to the cogenerator for power sales made in that period.

---

[56] As noted earlier, 75 percent of the annual marginal cost for generation capacity is allocated to the seven months of November through May, based upon LOLP considerations.

[57] It is not recommended that the power purchase tariff be structured as a single average price. These numbers are prescribed for reference and comparison purposes only. The power purchase tariff should be structured as a two-part tariff as defined in Table 4-15.

5.0 SAMPLE POWER PURCHASE CONTRACT

5.1 Introduction

Stable long-term contracts are necessary both for the security of the investor in a cogeneration system and for the reliance of the SEB on the purchased power in planning and managing its generating capacity. A set of model contractual provisions, that parties may wish to consider in formulating power purchase agreements in India, is included as Appendix C. The remainder of this chapter is devoted to an explanation of the suggested terms and to an analysis of the principles embodied in them.

5.2 Discussion of Terms

5.2.1 Purpose

The purpose of this contractual agreement is to establish the terms and conditions under which the State Electric Board("the SEB") will purchase, bank, and/or wheel power generated by the Sugar Mill ("the Mill"). Pricing for energy purchases pursuant to this contract is established under this contract, but the pricing for wheeling and banking is assumed to be covered by existing tariffs.

5.2.2 Basic Assumptions

In developing this contract, it was assumed that the Mill is a willing seller and that the SEB is a willing buyer. The capacity of the Mill was considered to be nominal in comparison to the total capacity of the SEB. These two assumptions are essential to the development of the nature of the contract. This contract has been developed as a model for purchases of power by the SEB from a "small power producer". [As defined in this context, a small power producer is generally considered one whose total output is less than one percent of the capacity of the utility.] If the SEB purchases a significant amount of firm capacity from an independent power producer ("an IPP") at some point in the future, the contract in that case should also have extensive provisions regarding the operating performance guarantees of the IPP and the development schedule.

5.2.3 Policy Considerations

The primary focus of this contract is operational considerations. The key policy consideration embodied in the contract is the establishment of an obligation on the part of the SEB to accept all kilowatt-hours made available by the Mill for sale, banking or wheeling. In recognition of the capacity needs of the SEB and the nature of the current load of the SEB, on- and off-peak rates were adopted to better reflect the true value of

Previous Page Blank

the capacity and energy being provided by the Mill. To simplify administration of this contract, it was decided that all banking and wheeling would be accounted for on the basis of the value of the energy involved rather than the actual kilowatt-hours banked or wheeled. In addition, rates were structured so that payment is made when performance is rendered; this eliminates the necessity of contractual provisions that deal with the failure of the Mill to perform.

5.2.4 Rates

5.2.4.1 Energy

The rates for energy payments by the SEB to the Mill for energy delivered by the Mill for sale to the SEB pursuant to this contract were calculated on the basis of the avoided energy costs of the SEB. In order to establish the lowest reasonable initial energy rate, the energy rate is escalated on the basis of the weighted average of a preestablished set of escalation factors which are readily available to both parties. When an energy escalation factor is utilized in U.S. contracts, it is usually based upon a group of indices that relate to the cost of the host utility's primary fuel.

5.2.4.2 Capacity

The financing of energy projects of the nature contemplated in this instance usually involves levelized payments to the lender for an eight to ten year term. In recognition of this, the contract capacity rates are set at a levelized cents/kilowatt-hour rate for the full term of the contract. Capacity payments are made by the SEB only for on-peak kilowatt-hours delivered by the Mill for sale to the SEB. If the Mill is unable to deliver energy for sale to the SEB for any reason, the SEB incurs no payment obligation and the Mill receives no revenue. This "payment strictly for performance" nature of this contract alleviates the need for extensive contractual provisions covering the potential failure of the Mill to perform.

5.2.4.3 Wheeling and Banking

The rates provided for in an appendix to the agreement stipulate fees that the SEB will charge the mill for banking or wheeling power.

5.2.5 Interconnection

As is standard practice in the U.S., the contract was structured so that the Mill is obligated to pay all of the costs for the necessary interconnection facilities. This is in recognition of the fact that the interconnection facilities would not be required were it not for the desire of the Mill to sell power to the SEB. The SEB has the right to establish the design specifications for the interconnection facilities to ensure that the operational interface is compatible with the balance of the SEB's system. Both the Mill and the SEB

are responsible for determining that the design incorporates those features necessary to protect their own facilities in the event of a problem with the other party's facilities.

5.2.6 Approvals

The design and construction of all electrical facilities required pursuant to the contract are subject to the inspection and approval of the Chief Electrical Inspector to Govenment. The design of the interconnection facilities is subject to approval by the SEB.

5.2.7 Operations

5.2.7.1 Routine

The daily operation of the Mill is left under the control of the Mill operating crew with system dispatch control (i.e. for voltage and frequency control) on the basis of verbal instructions to the Mill operators by the SEB system dispatcher. The normal Mill outages required for maintenance are required to be spelled out in advance so that they may be coordinated with the outage requirements of the SEB units. This coordination is necessary to achieve the highest value for the Mill capacity.

5.2.7.2 Curtailment

The Mill is required by the contract to curtail energy output to the SEB when requested to do so by the SEB system dispatcher. If the curtailment is required to enable the SEB to perform equipment installation or maintenance on its system or to correct a problem which endangers the safety of the SEB system, its employees or customers, the SEB is not required to pay for energy that could have been delivered by the Mill, provided that specified notification provisions are met in the case of installation and maintenance.

5.2.7.3 Interruption

Complete interruption of the output of the Mill to the SEB is accomplished in one of two ways. If there is sufficient time available, the Mill may be requested to voluntarily interrupt its output. This would be via a verbal request from the SEB system dispatcher to the Mill operator. In other circumstances where there is immediate danger to SEB equipment or personnel, the SEB may disconnect the Mill from the SEB system via interconnection breakers operated by the SEB (for larger facilities, this is generally done by remote control). Provision is made for the Mill to later challenge such an interruption if it believes that the SEB acted without proper justification.

5.2.8 Banking

In order to recognize the possibility of the concept of banking being a part of the transactions contemplated by this contract, it has been specifically identified as an obligation of the SEB to bank energy as designated by the Mill. To simplify accounting procedures, the contract calls for banking to be done on the basis of the value of the kilowatt-hours delivered by the Mill to the SEB rather than the number of kilowatt-hours delivered. The value is set on the basis of the energy rate that the SEB would have paid the Mill if the kilowatt-hours had been offered by the Mill for sale to the SEB. This eliminates the need to keep track of the time of kilowatt-hour deliveries by both the Mill and the SEB. This contract relies on standard banking tariffs for the determination of charges by the SEB for banking.

5.2.9 Wheeling

In many cases where there is wheeling of energy, the rate is determined based upon the transmission route involved and total wheeling charges are computed based upon the kilowatt-hours wheeled during a specified time period. Based upon the current status of the electrical system in India and the metering that would be involved, this contract is structured to reflect the nature of wheeling tariffs already in existence in India. As in the case for banking, wheeling charges are computed on the basis of the value of the kilowatt-hours wheeled rather than on the number of kilowatt-hours delivered. The value of the kilowatt-hours is based upon the energy rate that would have been paid by the SEB to the Mill if the kilowatt-hours had been offered to the SEB for sale, and the percentage used to determine the wheeling charge is assumed to be based upon existing wheeling tariffs.

5.2.10 Metering

The Mill is required by the contract to provide all of the necessary wiring, mounting cabinets and other hardware for the installation of meters to be supplied by the SEB. Provisions are provided in the contract for periodic testing of the meters and for trueing up accounts in the event of excessive meter errors found during calibration checks.

5.2.11 Permits

The Mill is responsible for obtaining all permits necessary for the project. Provision is made in the contract for the reimbursement of any costs which the SEB may incur in voluntarily assisting with the permitting process.

5.2.12 Term

In keeping with standard practices followed in the U.S. for contracts of this nature, the initial term is set at ten years. A three year advance notice is established for

the termination of the contract with a provision for automatic year-to-year extension until such notice is met by the party desiring to terminate the contract. The three year notice period is designed to provide the SEB sufficient lead time to obtain replacement capacity for that provided by the Mill.

5.2.13 Default

This contract is unique in its limitations on the reasons for which either party can declare the other in default. The standard provisions for failure to meet a material contractual obligation are included, but a unique provision has been included to prevent a default by the SEB for failure to make payments due to the Mill. The provision of a mechanism for direct bank payment at the request of the Mill is very unusual. This is a novel way to stimulate private power development given the concerns of the Mills about the financial capabilities of the SEB.

5.2.14 Indemnification

The indemnification clauses included in this contract are standard clauses found in most U.S. contracts wherein the parties are agreeing that neither party will be adversely affected by actions taken by the other party.

5.2.15 Assignment

Extensive assignment limitations have not been included in this contract since the parties involved are established entities with a long history in their basic business. Such a limitation would be considered necessary when dealing with a project entity established specifically for the development of a new independent power project.

5.2.16 Force Majeure

The intent of the language included in the draft contract is to reflect standard business practices in India. It may be necessary for Indian counsel to make slight modifications of the language to conform to local standards. A key element of the force majeure provision is that if either party is prohibited from performing in accordance with the contract by an event of force majeure, the second party will not be obligated to pay for service not rendered.

5.2.17 Dispute Settlement

On the basis of discussions held in India, arbitration is specified as the means for settlement of any disputes that may arise during the term of the contract. A contractual obligation has also been established for moving any dispute to a higher level in both parties in an attempt to have disputes resolved without having to resort to arbitration.

5.2.18 Conditions Precedent

Since the establishment of an agreement whereby the SEB's bank makes payments direct to the Mill is essential to the nature of this contract as currently drafted, this requirement has been made a condition which must be met by the SEB precedent to the Mill incurring any obligations under the contract.

APPENDIX A1:

Cogeneration System Design and Cost Data:
Aruna Sugars

ARUNA SUGARS

	OPTION 1	OPTION 2	OPTION	OPTION 4	OPTION 5	OPTION 6	OPTION 7
Boiler Fuels (Bagasse/Lignite)	B+L	B+L	B+L	B+L	B+L	B+L	B
Boiler-Nos and Capacity (TPH)	32 ata 1x70	3x60	3x60	3x80	3x80	3x60	1x80
Boiler-Nos and Capacity (TPH)	63 ata 2x60						1x60
Water treatment plant streams x M3/hr	2x23	2x23	2x23	2x30	2x30	2x23	2x18
TG set-In-season							
Throttle Flow (TPH/ata)	119/63	179/63	179/63	240/63	240/63	184/63	134/63
1st extraction (TPH/ata)	99/15	98/15	98/15	98/15	98/15	98/15	98/15
2nd extraction (TPH/ata)	-	43/2	2/2	25/2	25/2	25/2	25/2
Condensor (TPH/0.15 ata)	20	38	79	117	117	61	11
Off-season stream flow (MT/hr)	75	123	143	240	182	126	73
a. Crush Rate TCD	6000	6000	6000	6000	6000	6000	6000
b. Steam % Cane	56.4	56.4	40.0	50	50	50	50
c. Bagasse saved MT/season	-	-	-	-	-	-	237340
d. Lignite used (MT/year)	78000	127400	148200	348200	285775	135630	-
Power Generation							
In-season MW	11.67	21.68	26.24	40.5	40.5	28	17
Off-season MW	17.91	27.93	32.49	53.3	40.5	28	17
In-season Operating days	205	205	205	200	200	200	200
Off-season Operating days	130	130	130	135	135	135	135
TOTAL PROJECT COSTS (in Million Rs.)							
1. Boiler House	105.51	158.27	158.27	182.01	182.01	158.27	122.66
2. Water Treatment	9.61	9.61	9.61	9.61	10.17	9.61	8.48
3. T.G. Set	210.26	246.96	261.07	309.52	283.65	239.43	211.68
Subtotal	325.38	414.84	428.95	501.14	475.83	407.31	342.82
4. Cooling Tower, Mechanical	48.80	62.22	64.34	75.17	71.37	61.09	51.42
5. Electrical and Civil	130.15	165.93	171.58	200.45	190.33	162.92	137.12
Subtotal	504.33	642.99	664.86	776.76	737.53	631.27	531.36
6. Contingency @ 5%	25.21	32.14	33.24	38.83	36.87	31.56	26.56
TOTAL	529.54	675.13	698.11	815.59	774.40	662.83	557.92
TOTAL*	678.62	615.33	636.50	736.50	734.03	696.96	502.12

* This represents a lower rate of customs duty for the imported T.G. set from 55% F.O.B. to 30% F.O.B.

140

APPENDIX A2:

Cogeneration System Design and Cost Data:
Thiru Arooran

THIRU AROORAN SUGARS

	Option 1	Option 2	Option 3	Option 4	Option 5	Option 6	Option 7	Option 8	Option 9
Boiler Fuels (Bagasse/Lignite	B+L	B+L	B+L	B+L	B+L	B+L	B+L	B+L	B+L
Boiler Nos and Capacity (TPH)	2x60	2x60	3x60	1x60 +	1x60 +	1x118	2x80	1x60	3x60
Boiler Nos and Capacity (TPH)				1x80	1x80	1x32			
Water treatment plant steams x M3/hr	2x18	2x18	2x18	2x18	2x18	2x18	2x20	1x18	2x18
TG set-In-season									
Throttle Flow (TPH/ata)	102/63	102/63	102/63	136/63	136/63	118/63	160/63	30.7/63	154/63
1st extraction (TPH/ata).	77/42	70/42	52/42	94/42	70.5/42	70.5/42	70.5/42	-	11/7
2nd extraction (TPH/ata)	-	7/2.5	7/2.5	-	23.5/2.5	23.5/2.5	23.5/2.5	-	91/1.5
Condensor (TPH/0.15 ata)	25	25	43	42	42	24	66	30.7/.15	52/1.5
Off-season stream flow (MT/hr)	32	47	60	51	63	52	90	30.7	50
a. Crush Rate TCDr	3500	3500	3500	4500	4500	4500	4500	3000	5000
b. Bagasse saved MT/season	-	-	-	-	-	43101	-	-	-
Power Generation					-				
In-season MW	9.8	12.6	15.30	13.80	17.0	13.6	26.4	9.67	25.67
Off-season MW	6.88	9.60	12.26	10.80	14.0	11.5	25.5	6.67	18.20
In-season Operating days	255	255	255	255	255	255	255	255	255
Off-season Operating days	80	80	80	80	80	80	80	80	80
Lignite used MT/year	29,600	39,360	47,680	32,530	40,190	-	110,170	38,645	92,825
TOTAL PROJECT COSTS (In Million Rs.)									
1. Boiler House	105.51	105.51	105.51	122.66	122.66	130.01	133.39	52.75	158.26
2. Water Treatment	8.48	8.48	8.48	8.48	8.48	8.48	9.06	4.24	8.48
3. T.G. Set	127.00	159.46	190.98	173.57	196.15	178.15	238.02	151.90	442.68
Subtotal	240.09	273.65	304.97	304.97	327.29	316.64	380.45	208.89	609.42
4. Cooling Tower, Mechanical	36.15	41.01	45.74	45.70	49.09	67.58	57.06	31.33	91.41
5. Electrical and Civil	96.40	109.38	121.98	121.88	130.91	126.89	152.18	83.55	243.76
Subtotal	373.54	423.84	472.69	472.29	507.29	691.71	589.69	114.88	335.17
6. Contingency @ 5%	18.68	21.19	23.63	23.61	25.36	24.58	29.48	5.74	16.75
TOTAL	392.22	445.03	496.32	495.90	532.65	516.29	619.17	329.51	961.34
TOTAL*	352.99	400.52	446.68	446.31	479.38	464.66	557.25	296.55	865

*This represents a lower rate of customs duty for the imported T.G. set from 55% F.O.B. to 30% F.O.B.

APPENDIX A3:

Cogeneration System Design and Cost Data: VSSK

VSSK, SANGLI

	OPTION 1	OPTION 2	OPTION 3	OPTION 4	OPTION 5	OPTION 6
Boiler-Nos and Capacity (TPH)	2x80	1x80 +	2x80	1x80 +	3x60 +	2x80
Boiler-Nos and Capacity (TPH)		1x60		1x60		
Water treatment plant streams x M3/hr	2x20	2x18	2x20	2x18	2x23	2x20
TG set-In-season						
Throttle Flow (TPH/ata)	159/63	142/63	159/42	140/42	182/63	150/63
1st extraction (TPH/ata)	73/21	73/21	73/21	70/21	84/21	84/21
2nd extraction (TPH/ata)	70/2	55/2	70/2	40/2	80/2	51/2
Condensor (TPH/0.15 ata)	16	14	16	30	18	15
Off-season stream flow (MT/hr)	66	87	67	83	119	93
a. Crush Rate TCD	6000	6000	6000	6000	7000	7000
b. Steam % Cane	50	40	50	40	50	40
c. Bagasse saved MT/season	54701	77246	54886	72072	69800	136400
Power Generation						
In-season MW	22.14	19.01	16.30	12.28	25.29	19.44
Off-season MW	22.14	19.01	16.30	12.38	25.29	19.44
In-season Operating days	200	200	200	200	200	200
Off-season Operating days	50	94	50	65	56	141
TOTAL PROJECT COSTS (in Million Rs.)						
1. Boiler House	133.39	122.66	118.70	106.54	167.88	133.39
2. Water Treatment	9.04	8.48	9.04	8.48	9.61	9.04
3. T.G. Set	222.49	216.85	202.74	191.45	236.14	217.32
Subtotal	364.92	367.99	330.48	306.47	413.63	359.75
4. Cooling Tower, Mechanical	54.70	52.19	69.57	45.97	62.04	53.96
5. Electrical and Civil	165.97	139.19	132.19	122.58	165.45	143.90
Subtotal	565.59	539.37	512.24	675.02	641.12	557.61
6. Contingency @ 5%	28.27	26.96	25.61	23.75	32.05	27.88
TOTAL	593.86	566.33	537.85	498.77	673.17	585.69
TOTAL*	534.48	509.70	484.06	448.89	605.85	526.94

* This represents a lower rate of customs duty for the imported T.G. set from 55% F.O.B. to 30% F.O.B.

144

APPENDIX B1:

Financial Spreadsheets:
Aruna Sugars

Technical & Generation Cost Summary

		$US	Local Currency
Total Annual Electricity Production	kWh	328,853,250	
Total Annual Electricity Export	kWh	295,098,250	
Average Power Export	MW	41.0	
Total Investment	Millions	$31.94	894.26
Average Electricity Generation Cost	mills/kWh	63.19	1.77
Average Power Purchase Price	mills/kWh	53.14	1.49
Average System Avoided Cost	mills/kWh	99.45	2.78
Generation Cost Using Supplemental Fuels			
-trash	mills/kWh	N/A	N/A
-oil/gas	mills/kWh	N/A	N/A
-coal	mills/kWh	39.25	1.10
Net employment in power generation	days/year	18,300	

Financial & Economic Analysis Summary

		Financial		Economic	
		$US	Local Currency	$US	Local Currency
Present Value of Benefits	Millions	$100.91	2,825.61	$131.97	3,695.04
Present Value of Costs	Millions	$87.51	2,450.21	$88.24	2,470.79
Net Present Value	Millions	$13.41	375.40	$43.72	1,224.26
Benefit Cost Ratio:		1.15		1.50	
Internal Rate of Return (pre-tax)		25.00%		57.94%	
Internal Rate of Return (post-tax)		16.28%		NA	
Annualized Benefit Cost Ratio		0.65%		1.85%	
Payback Period (undiscounted)	years	4		NA	
Fuel Netback Value	per MBTU	$2.10	58.75	$3.30	92.28
Average Fuel Cost	per MBTU	$1.11	31.00	NA	
Total Displaced Oil Value per Year	Millions	$10.40	291.11	$10.40	291.11
Displaced Electric System Oil Use per Year	Millions	$10.40	291.11	$10.40	291.11
Displaced Oil Used in Host per Year	Millions	$0.00	0.00	$0.00	0.00

Note: Dollar figures are in $ Millions unless otherwise indicated Discount Rate = 10.00%

- 146 -

Technical & Generation Cost Summary

		$US	Local Currency
Total Annual Electricity Production	kWh	328,853,250	
Total Annual Electricity Export	kWh	295,098,250	
Average Power Export	MW	41.0	
Total Investment	Millions	$31.94	894.26
Average Electricity Generation Cost	mills/kWh	74.57	2.09
Average Power Purchase Price	mills/kWh	45.12	1.26
Average System Avoided Cost	mills/kWh	99.45	2.78
Generation Cost Using Supplemental Fuels			
-trash	mills/kWh	N/A	N/A
-oil/gas	mills/kWh	N/A	N/A
-coal	mills/kWh	50.63	1.42
Net employment in power generation	days/year	18,300	

Financial & Economic Analysis Summary

		Financial		Economic	
		$US	Local Currency	$US	Local Currency
Present Value of Benefits	Millions	$85.69	2,399.40	$131.97	3,695.04
Present Value of Costs	Millions	$81.52	2,282.62	$88.24	2,470.79
Net Present Value	Millions	$4.17	116.78	$43.72	1,224.26
Benefit Cost Ratio:		1.05		1.50	
Internal Rate of Return (pre-tax)		25.00%		57.94%	
Internal Rate of Return (post-tax)		14.45%		NA	
Annualized Benefit Cost Ratio		0.23%		1.85%	
Payback Period (undiscounted)	years	1		NA	
Fuel Netback Value	per MBTU	$1.77	49.61	$3.30	92.28
Average Fuel Cost	per MBTU	$1.11	31.00	NA	
Total Displaced Oil Value per Year	Millions	$10.40	291.11	$10.40	291.11
Displaced Electric System Oil Use per Year	Millions	$10.40	291.11	$10.40	291.11
Displaced Oil Used in Host per Year	Millions	$0.00	0.00	$0.00	0.00

Note: Dollar figures are in $ Millions unless otherwise indicated

Discount Rate = 19.00%

Aruna Sugars — Export Capacity (MW) in Season — 34 — 10/7/92
Leveraged Financing: Option 4, High Duties — 90% Availability

Financial Analysis: Summary

					Year	0	1	2	3	4	5
Total Revenues & Benefits					(financial)	0.00	0.00	13.32	13.32	14.52	15.83
Total Costs						1.33	4.10	13.56	13.54	14.31	15.16
Total Financial Cash Flows	**Full Avoided Cost Contracts**					-1.33	-4.10	-0.24	-0.22	0.21	0.67
Discounted Cash Flow Stream	($M)	Total	4.20	Annual		-1.33	-3.44	-0.17	-0.13	0.10	0.28
Summed Discounted Cash Flows	($M)					-1.33	-4.77	-4.94	-5.07	-4.96	-4.68

148

6	7	8	9	10	11	12	13	14	15	16	17	18	19	20	21
17.25	18.80	20.49	22.34	24.35	26.54	28.93	31.53	34.37	37.47	40.84	44.51	48.52	52.89	57.65	62.83
16.08	17.11	18.23	19.36	21.15	22.58	26.38	29.20	27.71	29.73	31.94	29.14	31.76	34.62	37.74	41.14
1.17	1.70	2.27	2.98	3.20	3.96	2.55	2.33	6.66	7.73	8.90	15.37	16.75	18.26	19.91	21.70
0.41	0.50	0.56	0.62	0.56	0.58	0.32	0.24	0.58	0.57	0.55	0.80	0.73	0.67	0.61	0.56
-4.27	-3.77	-3.21	-2.58	-2.02	-1.44	-1.12	-0.88	-0.30	0.27	0.82	1.62	2.35	3.02	3.64	4.20

449

Aruna Sugars
Leveraged Financing: Option 1, High Duties

Export Capacity (MW) in Season 34
90% Availability

10/7/92

Detailed Financial Analysis

Revenues & Benefits

				Year	0	1	2	3	4	5
Season 1 (#days)	200	$/kWh	Inflation (%/year)							
Capital	Peak	0.0450734	9%		0.00	0.00	2.75	2.75	2.99	3.26
	Offpeak	0.0321953	9%		0.00	0.00	2.75	2.75	2.99	3.26
Energy	Peak	0.0075774	9%		0.00	0.00	0.46	0.46	0.50	0.55
	Offpeak	0.0075774	9%		0.00	0.00	0.65	0.65	0.70	0.77
Season 2 (#days)	135									
Capital	Peak	0.0450734	9%		0.00	0.00	2.80	2.80	3.05	3.32
	Offpeak	0.0321953	9%		0.00	0.00	2.80	2.80	3.05	3.32
Energy	Peak	0.0075774	9%		0.00	0.00	0.47	0.47	0.51	0.56
	Offpeak	0.0075774	9%		0.00	0.00	0.66	0.66	0.72	0.78
Other output benefits (additional product)		0			0.00	0.00	0.00	0.00	0.00	0.00
Other Cost-Savings Benefits (Displ. Ref. Egy.)		0			0.00	0.00	0.00	0.00	0.00	0.00
Total Revenues & Benefits: 1. Avoided Energy Payments Only				**(financial)**	**0.00**	**0.00**	**2.24**	**2.24**	**2.44**	**2.66**
Total Revenues & Benefits: 2. Full Avoided Cost Contracts				**(financial)**	**0.00**	**0.00**	**13.32**	**13.32**	**14.52**	**15.83**
Discounted Benefit Stream	($M)	Total	85.72	Annual	0.00	0.00	9.41	7.90	7.24	6.63
Summed Disc. Benefit Stream	($M)				0.00	0.00	9.41	17.31	24.55	31.18

150

6	7	8	9	10	11	12	13	14	15	16	17	18	19	20	21
3.56	3.88	4.22	4.60	5.02	5.47	5.96	6.50	7.09	7.72	8.42	9.18	10.00	10.90	11.88	12.95
3.56	3.88	4.22	4.60	5.02	5.47	5.96	6.50	7.09	7.72	8.42	9.18	10.00	10.90	11.88	12.95
0.60	0.65	0.71	0.77	0.84	0.92	1.00	1.09	1.19	1.30	1.42	1.54	1.68	1.83	2.00	2.18
0.84	0.91	0.99	1.08	1.18	1.29	1.40	1.53	1.67	1.82	1.98	2.16	2.35	2.57	2.80	3.05
3.62	3.95	4.30	4.69	5.11	5.57	6.07	6.62	7.22	7.87	8.57	9.34	10.19	11.10	12.10	13.19
3.62	3.95	4.30	4.69	5.11	5.57	6.07	6.62	7.22	7.87	8.57	9.34	10.19	11.10	12.10	13.19
0.61	0.66	0.72	0.79	0.86	0.94	1.02	1.11	1.21	1.32	1.44	1.57	1.71	1.87	2.03	2.22
0.85	0.93	1.01	1.10	1.20	1.31	1.43	1.56	1.70	1.85	2.02	2.20	2.40	2.61	2.85	3.10
0.00	0.00	0.00	0.00	0.00	0.00	0.00	0.00	0.00	0.00	0.00	0.00	0.00	0.00	0.00	0.00
0.00	0.00	0.00	0.00	0.00	0.00	0.00	0.00	0.00	0.00	0.00	0.00	0.00	0.00	0.00	0.00
2.90	3.16	3.44	3.75	4.09	4.46	4.86	5.29	5.77	6.29	6.86	7.47	8.14	8.88	9.68	10.55
17.25	18.80	20.49	22.34	24.35	26.54	28.93	31.53	34.37	37.47	40.84	44.51	48.52	52.89	57.65	62.83
6.07	5.56	5.10	4.67	4.28	3.92	3.59	3.29	3.01	2.76	2.53	2.31	2.12	1.94	1.78	1.63
37.26	42.82	47.92	52.59	56.86	60.78	64.37	67.65	70.66	73.42	75.94	78.26	80.38	82.32	84.09	85.72

Aruna Sugars — Export Capacity (MW) in Season — 34 — 10/7/92
Leveraged Financing: Option 4, High Duties — 90% Availability

Costs & Investments

Variable Costs		Inflation Rate	Year	0	1	2	3	4	5
	$/kWh	(%/year)		Million Dollars					
Fuel	0.023441	9%		0	1.73	6.92	6.92	7.54	8.22
Bagasse	0.0078288	9%		0	0.16	0.65	0.65	0.71	0.77
Coal	0.0255142	9%		0	1.57	6.27	6.27	6.83	7.44
Trash	0.0316135	9%		0	0.00	0.00	0.00	0.00	0.00
Wood	0.0255142	9%		0	0.00	0.00	0.00	0.00	0.00
Oil	0.0295176	9%		0	0.00	0.00	0.00	0.00	0.00
Labor	0.0005838	9%		0	0.05	0.19	0.19	0.21	0.23
Skilled	0.0002281	9%		0	0.02	0.08	0.08	0.08	0.09
Unskilled	0.0003558	9%		0	0.03	0.12	0.12	0.13	0.14
Spare Parts	NA	NA		0	0.00	0.00	0.00	0.00	0.00
O&M	0.0033992	9%		0	0.28	1.12	1.12	1.22	1.33
Managemen	0.0015	9%		0.05	0.12	0.49	0.49	0.54	0.59
Total Financial Variable Costs				0.05	2.18	8.72	8.72	9.51	10.36
Discounted Variable Cost Stream ($M)	Total	58.63	Annual	0.05	1.83	6.16	5.17	4.74	4.34
Summed Discounted Cost Stream ($M)				0.05	1.88	8.04	13.22	17.96	22.30

251

6	7	8	9	10	11	12	13	14	15	16	17	18	19	20	21
8.96	9.76	10.64	11.60	12.65	13.78	15.02	16.38	17.85	19.46	21.21	23.12	25.20	27.46	29.94	32.63
0.84	0.92	1.00	1.09	1.19	1.30	1.42	1.54	1.68	1.83	2.00	2.18	2.38	2.59	2.82	3.08
8.11	8.84	9.64	10.51	11.45	12.48	13.61	14.83	16.17	17.62	19.21	20.94	22.82	24.88	27.11	29.55
0.00	0.00	0.00	0.00	0.00	0.00	0.00	0.00	0.00	0.00	0.00	0.00	0.00	0.00	0.00	0.00
0.00	0.00	0.00	0.00	0.00	0.00	0.00	0.00	0.00	0.00	0.00	0.00	0.00	0.00	0.00	0.00
0.00	0.00	0.00	0.00	0.00	0.00	0.00	0.00	0.00	0.00	0.00	0.00	0.00	0.00	0.00	0.00
0.25	0.27	0.30	0.32	0.35	0.38	0.42	0.45	0.50	0.54	0.59	0.64	0.70	0.76	0.83	0.91
0.10	0.11	0.12	0.13	0.14	0.15	0.16	0.18	0.19	0.21	0.23	0.25	0.27	0.30	0.32	0.35
0.15	0.17	0.18	0.20	0.21	0.23	0.25	0.28	0.30	0.33	0.36	0.39	0.43	0.46	0.51	0.55
0.00	0.00	0.00	0.00	0.00	0.00	2.24	3.35	0.00	0.00	0.00	0.00	0.00	0.00	0.00	0.00
1.45	1.58	1.72	1.87	2.04	2.23	2.43	2.65	2.88	3.14	3.43	3.74	4.07	4.44	4.84	5.27
0.64	0.70	0.76	0.83	0.90	0.98	1.07	1.17	1.27	1.39	1.51	1.65	1.80	1.96	2.13	2.33
11.29	12.31	13.42	14.63	15.94	17.38	21.18	24.00	22.50	24.53	26.74	29.14	31.76	34.62	37.74	41.14
3.98	3.64	3.34	3.06	2.80	2.56	2.63	2.50	1.97	1.80	1.65	1.51	1.39	1.27	1.16	1.07
26.27	29.92	33.25	36.31	39.11	41.67	44.30	46.80	48.77	50.57	52.23	53.74	55.13	56.40	57.56	58.63

Aruna Sugars — Export Capacity (MW) in Season 34 — 10/7/92

Leveraged Financing: Option 4, High Duties — 90% Availability

Investment & Fixed Costs										
	Investment in Fixed Plant ($ M)				12.78	19.16				
	Equity ($ M) =		10.00%		1.28	1.92				
Loan 1	Loan Outstanding				5.11	13.21	14.34	15.63	17.04	18.57
	Interest Payments				0.00	0.00	0.00	0.00	0.00	0.00
	Principal Payments				0.00	0.00	0.00	0.00	0.00	0.00
	Interest During Grace Period				0.00	0.00	1.29	1.41	1.53	1.67
Loan 2	Loan Outstanding				6.39	16.52	17.93	16.50	14.79	12.76
	Interest Payments				0.00	0.00	-3.41	-3.12	-2.78	-2.38
	Principal Payments				0.00	0.00	-1.43	-1.70	-2.03	-2.41
	Interest During Grace Period				0.00	0.00	1.61	0.00	0.00	0.00
Loan 3	Loan Outstanding				0.00	0.00	0.00	0.00	0.00	0.00
	Interest Payments				0.00	0.00	0.00	0.00	0.00	0.00
	Principal Payments				0.00	0.00	0.00	0.00	0.00	0.00
Other Cash Flows	Interest During Construction				1.09	2.82	0.00	0.00	0.00	0.00
	Div. to Equity Investors		0%		0.00	0.00	0.00	0.00	0.00	0.00
Total Investment & Financing Costs					1.28	1.92	4.84	4.82	4.81	4.80
Total Costs					**1.33**	**4.10**	**13.56**	**13.54**	**14.31**	**15.16**
Discounted Total Cost Stream	($M)	Total	81.52	Annual	1.33	3.44	9.57	8.03	7.14	6.35
Summed Discounted Cost Stream	($M)				1.33	4.77	14.34	22.38	29.52	35.87
Total Financial Cash Flows					**-1.33**	**-4.10**	**-0.24**	**-0.22**	**0.21**	**0.67**
Discounted Cash Flow Stream	($M)	Total	4.20	Annual	-1.33	-3.44	-0.17	-0.13	0.10	0.28
Summed Discounted Cash Flows	($M)				-1.33	-4.77	-4.94	-5.07	-4.96	-4.68

154

20.24	22.07	24.05	26.22	26.20	23.35	20.25	16.86	13.18	9.16	4.78	0.00	0.00	0.00	0.00	0.00
0.00	0.00	0.00	-2.36	-2.36	-2.10	-1.82	-1.52	-1.19	-0.82	-0.43	0.00	0.00	0.00	0.00	0.00
0.00	0.00	0.00	-2.38	-2.85	-3.10	-3.38	-3.69	-4.02	-4.38	-4.78	0.00	0.00	0.00	0.00	0.00
1.82	1.99	2.16	2.36	0.00	0.00	0.00	0.00	0.00	0.00	0.00	0.00	0.00	0.00	0.00	0.00
10.35	7.48	4.07	0.00	0.00	0.00	0.00	0.00	0.00	0.00	0.00	0.00	0.00	0.00	0.00	0.00
-1.92	-1.38	-0.74	0.00	0.00	0.00	0.00	0.00	0.00	0.00	0.00	0.00	0.00	0.00	0.00	0.00
-2.87	-3.42	-4.07	0.00	0.00	0.00	0.00	0.00	0.00	0.00	0.00	0.00	0.00	0.00	0.00	0.00
0.00	0.00	0.00	0.00	0.00	0.00	0.00	0.00	0.00	0.00	0.00	0.00	0.00	0.00	0.00	0.00
0.00	0.00	0.00	0.00	0.00	0.00	0.00	0.00	0.00	0.00	0.00	0.00	0.00	0.00	0.00	0.00
0.00	0.00	0.00	0.00	0.00	0.00	0.00	0.00	0.00	0.00	0.00	0.00	0.00	0.00	0.00	0.00
0.00	0.00	0.00	0.00	0.00	0.00	0.00	0.00	0.00	0.00	0.00	0.00	0.00	0.00	0.00	0.00
0.00	0.00	0.00	0.00	0.00	0.00	0.00	0.00	0.00	0.00	0.00	0.00	0.00	0.00	0.00	0.00
0.00	0.00	0.00	0.00	0.00	0.00	0.00	0.00	0.00	0.00	0.00	0.00	0.00	0.00	0.00	0.00
0.00	0.00	0.00	0.00	0.00	0.00	0.00	0.00	0.00	0.00	0.00	0.00	0.00	0.00	0.00	0.00
4.79	4.80	4.81	4.74	5.21	5.21	5.21	5.21	5.21	5.21	5.21	0.00	0.00	0.00	0.00	0.00
16.08	**17.11**	**18.23**	**19.36**	**21.15**	**22.58**	**26.38**	**29.20**	**27.71**	**29.73**	**31.94**	**29.14**	**31.76**	**34.62**	**37.74**	**41.14**
5.66	5.06	4.53	4.05	3.71	3.33	3.27	3.04	2.43	2.19	1.98	1.51	1.39	1.27	1.16	1.07
41.53	46.59	51.12	55.17	58.88	62.22	65.49	68.53	70.96	73.15	75.12	76.63	78.02	79.29	80.46	81.52
1.17	**1.70**	**2.27**	**2.98**	**3.20**	**3.96**	**2.55**	**2.33**	**6.66**	**7.73**	**8.90**	**15.37**	**16.75**	**18.26**	**19.91**	**21.70**
0.41	0.50	0.56	0.62	0.56	0.58	0.32	0.24	0.58	0.57	0.55	0.80	0.73	0.67	0.61	0.56
-4.27	-3.77	-3.21	-2.58	-2.02	-1.44	-1.12	-0.88	-0.30	0.27	0.82	1.62	2.35	3.02	3.64	4.20

APPENDIX B2:

Financial Spreadsheets:
Thiru Arooran

Thiru Arooran Sugars | Export Capacity (MW) in Season | 22.9 | 10/7/92

100% Equity (Reserve): Option 7, High Duties | 90% Availability

Technical & Generation Cost Summary

		$US	Local Currency
Total Annual Electricity Production	kWh	188,598,000	
Total Annual Electricity Export	kWh	165,969,250	
Average Power Export	MW	23.0	
Total Investment	Millions	$24.11	675.20
Average Electricity Generation Cost	mills/kWh	54.55	1.53
Average Power Purchase Price	mills/kWh	56.72	1.59
Average System Avoided Cost	mills/kWh	99.45	2.78
Generation Cost Using Supplemental Fuels			
-trash	mills/kWh	N/A	N/A
-oil/gas	mills/kWh	N/A	N/A
-coal	mills/kWh	35.31	0.99
Net employment in power generation	days/year	18,300	

Financial & Economic Analysis Summary

		Financial		Economic	
		$US	Local Currency	$US	Local Currency
Present Value of Benefits	Millions	$60.74	1,700.77	$74.33	2,061.32
Present Value of Costs	Millions	$50.82	1,422.83	$50.79	1,422.04
Net Present Value	Millions	$9.93	277.93	$23.55	659.27
Benefit Cost Ratio:		1.20		1.46	
Internal Rate of Return (pre-tax)		24.99%		45.72%	
Internal Rate of Return (post-tax)		16.35%		NA	
Annualized Benefit Cost Ratio		0.81%		1.75%	
Payback Period (undiscounted)	years	4		NA	
Fuel Netback Value	per MBTU	$2.64	73.88	$3.99	111.70
Average Fuel Cost	per MBTU	$0.89	25.03	NA	
Total Displaced Oil Value per Year	Millions	$5.85	163.73	$5.85	163.73
Displaced Electric System Oil Use per Year	Millions	$5.85	163.73	$5.85	163.73
Displaced Oil Used in Host per Year	Millions	$0.00	0.00	$0.00	0.00

Note: Dollar figures are in $ Millions unless otherwise indicated | Discount Rate = 19.00%

151

Thiru Arooran Sugars — Export Capacity (MW) in Season — 22.9 — 10/7/92

Leveraged Financing: Option 7, High Duties — 90% Availability

Technical & Generation Cost Summary

		$US	Local Currency
Total Annual Electricity Production	kWh	188,598,000	
Total Annual Electricity Export	kWh	165,969,250	
Average Power Export	MW	23.0	
Total Investment	Millions	$24.11	675.20
Average Electricity Generation Cost	mills/kWh	69.53	1.95
Average Power Purchase Price	mills/kWh	46.00	1.29
Average System Avoided Cost	mills/kWh	99.45	2.78
Generation Cost Using Supplemental Fuels			
-trash	mills/kWh	N/A	N/A
-oil/gas	mills/kWh	N/A	N/A
-coal	mills/kWh	50.29	1.41
Net employment in power generation	days/year	18,300	

Financial & Economic Analysis Summary

		Financial		Economic	
		$US	Local Currency	$US	Local Currency
Present Value of Benefits	Millions	$49.29	1,380.23	$74.33	2,081.32
Present Value of Costs	Millions	$46.30	1,296.29	$50.79	1,422.04
Net Present Value	Millions	$3.00	83.94	$23.55	659.27
Benefit Cost Ratio:		1.06		1.46	
Internal Rate of Return (pre-tax)		25.09%		45.72%	
Internal Rate of Return (post-tax)		14.33%		NA	
Annualized Benefit Cost Ratio		0.29%		1.75%	
Payback Period (undiscounted)	years	1		NA	
Fuel Netback Value	per MBTU	$2.02	56.57	$3.99	111.70
Average Fuel Cost	per MBTU	$0.89	25.03	NA	
Total Displaced Oil Value per Year	Millions	$5.85	163.73	$5.85	163.73
Displaced Electric System Oil Use per Year	Millions	$5.85	163.73	$5.85	163.73
Displaced Oil Used in Host per Year	Millions	$0.00	0.00	$0.00	0.00

Note: Dollar figures are in $ Millions unless otherwise indicated — Discount Rate = 19.00%

Thiru Arooran Sugars — Export Capacity (MW) in Season 22.9 — 10/7/92
Leveraged Financing: Option 7, High Duties — 90% Availability

Financial Analysis: Summary

					Year	0	1	2	3	4	5
Total Revenues & Benefits					(financial)	0.00	0.00	7.66	7.66	8.35	9.10
Total Costs						1.02	2.52	7.94	7.93	8.30	8.71
Total Financial Cash Flows	**Full Avoided Cost Contracts**					-1.02	-2.52	-0.28	-0.27	0.05	0.39
Discounted Cash Flow Stream	($M)	Total	3.00	Annual		-1.02	-2.12	-0.20	-0.16	0.02	0.16
Summed Discounted Cash Flows	($M)					-1.02	-3.13	-3.33	-3.49	-3.46	-3.30

151

6	7	8	9	10	11	12	13	14	15	16	17	18	19	20	21
9.92	10.81	11.79	12.85	14.00	15.26	16.64	18.13	19.77	21.54	23.48	25.60	27.90	30.41	33.15	36.13
9.17	9.67	10.23	10.77	11.77	12.47	14.93	16.61	14.99	15.99	17.07	14.32	15.61	17.02	18.55	20.22
0.75	1.14	1.56	2.08	2.24	2.79	1.71	1.52	4.77	5.56	6.41	11.27	12.29	13.39	14.60	15.91
0.26	0.34	0.39	0.43	0.39	0.41	0.21	0.16	0.42	0.41	0.40	0.59	0.54	0.49	0.45	0.41
-3.04	-2.70	-2.31	-1.88	-1.48	-1.07	-0.86	-0.70	-0.28	0.13	0.52	1.11	1.64	2.14	2.59	3.00

160

Thiru Arooran Sugars — Export Capacity (MW) in Season — 22.9 — 10/7/92
Leveraged Financing: Option 7, High Duties — 90% Availability

Detailed Financial Analysis

Revenues & Benefits

				Year	0	1	2	3	4	5
Season 1 (#days)	255	$/kWh	Inflation (%/year)							
Capital Peak		0.0450734	9%		0.00	0.00	2.36	2.36	2.57	2.80
Offpeak		0.0321953	9%		0.00	0.00	2.36	2.36	2.57	2.80
Energy Peak		0.0084397	9%		0.00	0.00	0.44	0.44	0.48	0.52
Offpeak		0.0084397	9%		0.00	0.00	0.62	0.62	0.67	0.73
Season 2 (#days)	80									
Capital Peak		0.0450734	9%		0.00	0.00	0.76	0.76	0.83	0.90
Offpeak		0.0321953	9%		0.00	0.00	0.76	0.76	0.83	0.90
Energy Peak		0.0084397	9%		0.00	0.00	0.14	0.14	0.15	0.17
Offpeak		0.0084397	9%		0.00	0.00	0.20	0.20	0.22	0.24
Other output benefits (additional product)		25000			0.00	0.00	0.03	0.03	0.03	0.03
Other Cost-Savings Benefits (Displ. Ref. Egy.)		0			0.00	0.00	0.00	0.00	0.00	0.00
Total Revenues & Benefits: 1. Avoided Energy Payments Only				**(financial)**	**0.00**	**0.00**	**1.45**	**1.45**	**1.58**	**1.72**
Total Revenues & Benefits: 2. Full Avoided Cost Contracts				**(financial)**	**0.00**	**0.00**	**7.66**	**7.66**	**8.35**	**9.10**
Discounted Benefit Stream ($M)		**Total**	**49.29**	Annual	0.00	0.00	5.41	4.55	4.16	3.81
Summed Disc. Benefit Stream ($M)					0.00	0.00	5.41	9.95	14.12	17.93

191

6	7	8	9	10	11	12	13	14	15	16	17	18	19	20	21
3.05	3.33	3.63	3.95	4.31	4.70	5.12	5.58	6.08	6.63	7.23	7.88	8.59	9.36	10.20	11.12
3.05	3.33	3.63	3.95	4.31	4.70	5.12	5.58	6.08	6.63	7.23	7.88	8.59	9.36	10.20	11.12
0.57	0.62	0.68	0.74	0.81	0.88	0.96	1.05	1.14	1.24	1.35	1.48	1.61	1.75	1.91	2.08
0.80	0.87	0.95	1.04	1.13	1.23	1.34	1.46	1.59	1.74	1.89	2.07	2.25	2.4[illegible]	2.67	2.92
0.98	1.07	1.17	1.27	1.39	1.51	1.65	1.80	1.96	2.14	2.33	2.54	2.77	3.01	3.29	3.58
0.98	1.07	1.17	1.27	1.39	1.51	1.65	1.80	1.96	2.14	2.33	2.54	2.77	3.01	3.29	3.58
0.18	0.20	0.22	0.24	0.26	0.28	0.31	0.34	0.37	0.40	0.44	0.47	0.5[illegible]	0.56	0.62	0.67
0.26	0.28	0.31	0.33	0.36	0.40	0.43	0.47	0.51	0.56	0.61	0.66	0.72	0.79	0.86	0.94
0.03	0.04	0.04	0.04	0.05	0.05	0.05	0.06	0.06	0.07	0.08	0.08	0.09	0.10	0.11	0.12
0.00	0.00	0.00	0.00	0.00	0.00	0.00	0.00	0.00	0.00	0.00	0.00	0.00	0.00	0.00	0.00
1.88	2.05	2.23	2.43	2.65	2.89	3.15	3.43	3.74	4.08	4.45	4.85	5.28	5.76	6.28	6.84
9.92	10.81	11.79	12.85	14.00	15.26	16.64	18.13	19.77	21.54	23.48	25.60	27.90	30.41	33.15	36.13
3.49	3.20	2.93	2.68	2.46	2.25	2.06	1.89	1.73	1.59	1.45	1.33	1.22	1.12	1.02	0.94
21.42	24.62	27.55	30.24	32.70	34.95	37.01	38.90	40.63	42.22	43.67	45.00	46.22	47.34	48.36	49.29

152

Thiru Arooran Sugars — Export Capacity (MW) in Season 22.9 — 10/7/92
Leveraged Financing: Option 7, High Duties — 90% Availability

Costs & Investments

Variable Costs		Inflation Rate	Year	0	1	2	3	4	5
	$/kWh	(%/year)		Million Dollars					
Fuel	0.0178214	9%		0	0.74	2.96	2.96	3.22	3.51
Bagasse	0.0081285	9%		0	0.08	0.31	0.31	0.34	0.37
Coal	0.0176266	9%		0	0.66	2.64	2.64	2.88	3.14
Trash	0.0218403	9%		0	0.00	0.00	0.00	0.00	0.00
Wood	0.0176266	9%		0	0.00	0.00	0.00	0.00	0.00
Oil	0.0203924	9%		0	0.00	0.00	0.00	0.00	0.00
Labor	0.001018	9%		0	0.05	0.19	0.19	0.21	0.23
Skilled	0.0003977	9%		0	0.02	0.08	0.08	0.08	0.09
Unskilled	0.0006204	9%		0	0.03	0.12	0.12	0.13	0.14
Spare Parts	NA	NA		0	0.00	0.00	0.00	0.00	0.00
O&M	0.0044751	9%		0	0.21	0.84	0.84	0.92	1.00
Managemer	0.0015	9%		0.05	0.07	0.28	0.28	0.31	0.34
Total Financial Variable Costs				0.05063	1.07	4.29	4.29	4.67	5.09
Discounted Variable Cost Stream ($M)	Total	29.01	Annual	0.05	0.90	3.03	2.54	2.33	2.13
Summed Discounted Cost Stream ($M)				0.05	0.95	3.98	6.52	8.85	10.99

163

6	7	8	9	10	11	12	13	14	15	16	17	18	19	20	21
3.83	4.18	4.55	4.96	5.41	5.89	6.42	7.00	7.63	8.32	9.07	9.88	10.77	11.74	12.80	13.95
0.41	0.44	0.48	0.53	0.57	0.63	0.68	0.74	0.81	0.88	0.96	1.05	1.14	1.25	1.36	1.48
3.42	3.73	4.07	4.43	4.83	5.27	5.74	6.26	6.82	7.44	8.11	8.84	9.63	10.50	11.44	12.47
0.00	0.00	0.00	0.00	0.00	0.00	0.00	0.00	0.00	0.00	0.00	0.00	0.00	0.00	0.00	0.00
0.00	0.00	0.00	0.00	0.00	0.00	0.00	0.00	0.00	0.00	0.00	0.00	0.00	0.00	0.00	0.00
0.00	0.00	0.00	0.00	0.00	0.00	0.00	0.00	0.00	0.00	0.00	0.00	0.00	0.00	0.00	0.00
0.25	0.27	0.30	0.32	0.35	0.38	0.42	0.45	0.50	0.54	0.59	0.64	0.70	0.76	0.83	0.91
0.10	0.11	0.12	0.13	0.14	0.15	0.16	0.18	0.19	0.21	0.23	0.25	0.27	0.30	0.32	0.35
0.15	0.17	0.18	0.20	0.21	0.23	0.25	0.28	0.30	0.33	0.36	0.39	0.43	0.46	0.51	0.55
0.00	0.00	0.00	0.00	0.00	0.00	1.69	2.53	0.00	0.00	0.00	0.00	0.00	0.00	0.00	0.00
1.09	1.19	1.30	1.42	1.54	1.68	1.83	2.00	2.18	2.37	2.59	2.82	3.07	3.35	3.65	3.98
0.37	0.40	0.44	0.47	0.52	0.56	0.61	0.67	0.73	0.80	0.87	0.95	1.03	1.12	1.22	1.33
5.55	6.05	6.60	7.19	7.84	8.54	11.00	12.68	11.06	12.06	13.14	14.32	15.61	17.02	18.55	20.22
1.95	1.79	1.64	1.50	1.38	1.26	1.36	1.32	0.97	0.89	0.81	0.74	0.68	0.62	0.57	0.52
12.94	14.73	16.37	17.87	19.25	20.51	21.87	23.20	24.16	25.05	25.86	26.61	27.29	27.92	28.49	29.01

164

Thiru Arooran Sugars — Export Capacity (MW) in Season 22.9 — 10/7/92
Leveraged Financing: Option 7, High Duties — 90% Availability

Investment & Fixed Costs										
	Investment in Fixed Plant ($ M)				9.65	14.47				
	Equity ($ M) =	10.00%			0.96	1.45				
Loan 1	Loan Outstanding				3.86	9.98	10.83	11.80	12.87	14.02
	Interest Payments				0.00	0.00	0.00	0.00	0.00	0.00
	Principal Payments				0.00	0.00	0.00	0.00	0.00	0.00
	Interest During Grace Period				0.00	0.00	0.97	1.06	1.16	1.26
Loan 2	Loan Outstanding				4.82	12.47	13.54	12.45	11.17	9.64
	Interest Payments				0.00	0.00	-2.57	-2.35	-2.10	-1.80
	Principal Payments				0.00	0.00	-1.08	-1.29	-1.53	-1.82
	Interest During Grace Period				0.00	0.00	1.22	0.00	0.00	0.00
Loan 3	Loan Outstanding				0.00	0.00	0.00	0.00	0.00	0.00
	Interest Payments				0.00	0.00	0.00	0.00	0.00	0.00
	Principal Payments				0.00	0.00	0.00	0.00	0.00	0.00
Other Cash Flows	Interest During Construction				0.82	2.13	0.00	0.00	0.00	0.00
	Div. to Equity Investors	0%			0.00	0.00	0.00	0.00	0.00	0.00
Total Investment & Financing Costs					0.96	1.45	3.65	3.64	3.63	3.62
Total Costs					1.02	2.52	7.94	7.93	8.30	8.71
Discounted Total Cost Stream	($M)	Total	46.30	Annual	1.02	2.12	5.61	4.70	4.14	3.65
Summed Discounted Cost Stream	($M)				1.02	3.13	8.74	13.44	17.58	21.23
Total Financial Cash Flows					-1.02	-2.52	-0.28	-0.27	0.05	0.39
Discounted Cash Flow Stream	($M)	Total	3.00	Annual	-1.02	-2.12	-0.20	-0.16	0.02	0.16
Summed Discounted Cash Flows	($M)				-1.02	-3.13	-3.33	-3.49	-3.46	-3.30

165

15.29	16.66	18.16	19.79	19.78	17.63	15.29	12.73	9.95	6.91	3.61	0.00	0.00	0.00	0.00	0.00
0.00	0.00	0.00	-1.78	-1.78	-1.59	-1.38	-1.15	-0.90	-0.62	-0.32	0.00	0.00	0.00	0.00	0.00
0.00	0.00	0.00	-1.79	-2.15	-2.34	-2.55	-2.78	-3.03	-3.31	-3.61	0.00	0.00	0.00	0.00	0.00
1.38	1.50	1.63	1.78	0.00	0.00	0.00	0.00	0.00	0.00	0.00	0.00	0.00	0.00	0.00	0.00
7.82	5.65	3.07	0.00	0.00	0.00	0.00	0.00	0.00	0.00	0.00	0.00	0.00	0.00	0.00	0.00
-1.45	-1.04	-0.56	0.00	0.00	0.00	0.00	0.00	0.00	0.00	0.00	0.00	0.00	0.00	0.00	0.00
-2.17	-2.58	-3.07	0.00	0.00	0.00	0.00	0.00	0.00	0.00	0.00	0.00	0.00	0.00	0.00	0.00
0.00	0.00	0.00	0.00	0.00	0.00	0.00	0.00	0.00	0.00	0.00	0.00	0.00	0.00	0.00	0.00
0.00	0.00	0.00	0.00	0.00	0.00	0.00	0.00	0.00	0.00	0.00	0.00	0.00	0.00	0.00	0.00
0.00	0.00	0.00	0.00	0.00	0.00	0.00	0.00	0.00	0.00	0.00	0.00	0.00	0.00	0.00	0.00
0.00	0.00	0.00	0.00	0.00	0.00	0.00	0.00	0.00	0.00	0.00	0.00	0.00	0.00	0.00	0.00
0.00	0.00	0.00	0.00	0.00	0.00	0.00	0.00	0.00	0.00	0.00	0.00	0.00	0.00	0.00	0.00
0.00	0.00	0.00	0.00	0.00	0.00	0.00	0.00	0.00	0.00	0.00	0.00	0.00	0.00	0.00	0.00
0.00	0.00	0.00	0.00	0.00	0.00	0.00	0.00	0.00	0.00	0.00	0.00	0.00	0.00	0.00	0.00
3.62	3.62	3.63	3.58	3.93	3.93	3.93	3.93	3.93	3.93	3.93	0.00	0.00	0.00	0.00	0.00
9.17	9.67	10.23	10.77	11.77	12.47	14.93	16.61	14.99	15.99	17.07	14.32	15.61	17.02	18.55	20.22
3.23	2.86	2.54	2.25	2.07	1.84	1.85	1.73	1.31	1.18	1.06	0.74	0.68	0.62	0.57	0.52
24.46	27.32	29.87	32.12	34.18	36.02	37.87	39.60	40.92	42.09	43.15	43.89	44.58	45.20	45.77	46.30
0.75	1.14	1.56	2.08	2.24	2.79	1.71	1.52	4.77	5.56	6.41	11.27	12.29	13.39	14.60	15.91
0.26	0.34	0.39	0.43	0.39	0.41	0.21	0.16	0.42	0.41	0.40	0.59	0.54	0.49	0.45	0.41
-3.04	-2.70	-2.31	-1.88	-1.48	-1.07	-0.86	-0.70	-0.28	0.13	0.52	1.11	1.64	2.14	2.59	3.00

166

Thiru Arooran Sugars — Export Capacity (MW) in Season 6.67 — 12/30/92

Full Avoided Cost: Option 8, High Duties — 90% Availability

Technical & Generation Cost Summary

		$US	Local Currency
Total Annual Electricity Production	kWh	64,488,175	
Total Annual Electricity Export	kWh	46,320,675	
Average Power Export	MW	6.4	
Total Investment	Millions	$14.21	397.88
Average Electricity Generation Cost	mills/kWh	46.62	1.31
Average Power Purchase Price	mills/kWh	90.81	2.54
Average System Avoided Cost	mills/kWh	99.45	2.78
Generation Cost Using Supplemental Fuels			
-trash	mills/kWh	N/A	N/A
-oil/gas	mills/kWh	N/A	N/A
-coal	mills/kWh	N/A	N/A
Net employment in power generation	days/year	16,300	

Financial & Economic Analysis Summary

		Financial		Economic	
		$US	Local Currency	$US	Local Currency
Present Value of Benefits	Millions	$27.07	757.96	$32.99	923.71
Present Value of Costs	Millions	$21.33	597.12	$21.14	591.79
Net Present Value	Millions	$5.74	160.84	$11.85	331.92
Benefit Cost Ratio:		1.27		1.56	
Internal Rate of Return (pre-tax)		24.99%		31.43%	
Internal Rate of Return (post-tax)		16.42%		NA	
Annualized Benefit Cost Ratio		1.09%		2.04%	
Payback Period (undiscounted)	years	4		NA	
Fuel Netback Value	per MBTU	$2.26	63.31	$3.91	109.59
Average Fuel Cost	per MBTU	$0.66	18.57	NA	
Total Displaced Oil Value per Year	Millions	$1.63	45.69	$1.63	45.69
Displaced Electric System Oil Use per Year	Millions	$1.63	45.69	$1.63	45.69
Displaced Oil Used in Host per Year	Millions	$0.00	0.00	$0.00	0.00

Note: Dollar figures are in $ Millions unless otherwise indicated — Discount Rate = 19.00%

167

Thiru Arooran Sugars — Export Capacity (MW) in Season — 6.67 — 12/30/92

Leveraged Financing: Option 8, High Duties — 90% Availability

Technical & Generation Cost Summary

		$US	Local Currency
Total Annual Electricity Production	kWh	64,488,175	
Total Annual Electricity Export	kWh	46,320,675	
Average Power Export	MW	6.4	
Total Investment	Millions	$14.21	397.88
Average Electricity Generation Cost	mills/kWh	72.44	2.03
Average Power Purchase Price	mills/kWh	68.15	1.91
Average System Avoided Cost	mills/kWh	99.45	2.78
Generation Cost Using Supplemental Fuels			
-trash	mills/kWh	N/A	N/A
-oil/gas	mills/kWh	N/A	N/A
-coal	mills/kWh	N/A	N/A
Net employment in power generation	days/year	18,300	

Financial & Economic Analysis Summary

		Financial		Economic	
		$US	Local Currency	$US	Local Currency
Present Value of Benefits	Millions	$20.31	568.82	$32.99	923.71
Present Value of Costs	Millions	$18.66	522.55	$21.14	591.79
Net Present Value	Millions	$1.65	46.27	$11.85	331.92
Benefit Cost Ratio:		1.09		1.56	
Internal Rate of Return (pre-tax)		25.05%		31.43%	
Internal Rate of Return (post-tax)		14.09%		NA	
Annualized Benefit Cost Ratio		0.39%		2.04%	
Payback Period (undiscounted)	years	1		NA	
Fuel Netback Value	per MBTU	$1.19	33.42	$3.91	109.59
Average Fuel Cost	per MBTU	$0.66	18.57	NA	
Total Displaced Oil Value per Year	Millions	$1.63	45.69	$1.63	45.69
Displaced Electric System Oil Use per Year	Millions	$1.63	45.69	$1.63	45.69
Displaced Oil Used in Host per Year	Millions	$0.00	0.00	$0.00	0.00

Note: Dollar figures are in $ Millions unless otherwise indicated — Discount Rate = 19.00%

60

Thiru Arooran Sugars | Export Capacity (MW) in Season | 6.67 | 12/30/92
Leveraged Financing: Option 8, High Duties | 90% Availability

Financial Analysis: Summary

					Year	0	1	2	3	4	5
Total Revenues & Benefits					(financial)	0.00	0.00	3.16	3.16	3.44	3.75
Total Costs						0.62	1.16	3.38	3.37	3.47	3.59
Total Financial Cash Flows	**Full Avoided Cost Contracts**					-0.62	-1.16	-0.22	-0.21	-0.03	0.16
Discounted Cash Flow Stream	($M)	Total	1.65	Annual		-0.62	-0.97	-0.16	-0.13	-0.02	0.07
Summed Discounted Cash Flows	($M)					-0.62	-1.59	-1.75	-1.88	-1.89	-1.83

169

6	7	8	9	10	11	12	13	14	15	16	17	18	19	20	21
4.09	4.46	4.86	5.29	5.77	6.29	6.86	7.47	8.15	8.88	9.68	10.55	11.50	12.53	13.66	14.89
3.72	3.86	4.03	4.16	4.56	4.76	5.97	6.71	5.48	5.76	6.08	4.10	4.47	4.87	5.31	5.78
0.37	0.59	0.83	1.13	1.21	1.53	0.88	0.76	2.67	3.11	3.60	6.45	7.03	7.67	8.36	9.11
0.13	0.18	0.21	0.24	0.21	0.23	0.11	0.08	0.23	0.23	0.22	0.34	0.31	0.28	0.26	0.24
-1.70	-1.52	-1.31	-1.08	-0.86	-0.64	-0.53	-0.45	-0.22	0.01	0.24	0.57	0.88	1.16	1.42	1.65

170

Thiru Arooran Sugars | Export Capacity (MW) in Season | 6.67 | 12/30/92
Leveraged Financing: Option 8, High Duties | 90% Availability

Detailed Financial Analysis

Revenues & Benefits

				Year	0	1	2	3	4	5
Season 1 (#days)	255	$/kWh	Inflation (%/year)							
Capital Peak		0.0450734	9%		0.00	0.00	0.69	0.69	0.75	0.82
Offpeak		0.0321953	9%		0.00	0.00	0.69	0.69	0.75	0.82
Energy Peak		0.0305879	9%		0.00	0.00	0.47	0.47	0.51	0.55
Offpeak		0.0305879	9%		0.00	0.00	0.65	0.65	0.71	0.78
Season 2 (#days)	80									
Capital Peak		0.0450734	9%		0.00	0.00	0.18	0.18	0.20	0.22
Offpeak		0.0321953	9%		0.00	0.00	0.18	0.18	0.20	0.22
Energy Peak		0.0305879	9%		0.00	0.00	0.12	0.12	0.14	0.15
Offpeak		0.0305879	9%		0.00	0.00	0.17	0.17	0.19	0.21
Other output benefits (additional product)		0			0.00	0.00	0.00	0.00	0.00	0.00
Other Cost-Savings Benefits (Displ. Ref. Egy.)		0			0.00	0.00	0.00	0.00	0.00	0.00
Total Revenues & Benefits: 1. Avoided Energy Payments Only				(financial)	0.00	0.00	1.42	1.42	1.54	1.68
Total Revenues & Benefits: 2. Full Avoided Cost Contracts				(financial)	0.00	0.00	3.16	3.16	3.44	3.75
Discounted Benefit Stream ($M)	Total	20.31		Annual	0.00	0.00	2.23	1.87	1.72	1.57
Summed Disc. Benefit Stream ($M)					0.00	0.00	2.23	4.10	5.82	7.39

171

6	7	8	9	10	11	12	13	14	15	16	17	18	19	20	21
0.89	0.97	1.06	1.15	1.26	1.37	1.49	1.63	1.77	1.93	2.11	2.30	2.50	2.73	2.97	3.24
0.89	0.97	1.06	1.15	1.26	1.37	1.49	1.63	1.77	1.93	2.11	2.30	2.50	2.73	2.97	3.24
0.60	0.66	0.72	0.78	0.85	0.93	1.01	1.10	1.20	1.31	1.43	1.56	1.70	1.85	2.02	2.20
0.84	0.92	1.00	1.09	1.19	1.30	1.42	1.54	1.68	1.84	2.00	2.18	2.38	2.59	2.82	3.08
0.24	0.26	0.28	0.31	0.33	0.36	0.40	0.43	0.47	0.52	0.56	0.61	0.67	0.73	0.79	0.86
0.24	0.26	0.28	0.31	0.33	0.36	0.40	0.43	0.47	0.52	0.56	0.61	0.67	0.73	0.79	0.86
0.16	0.18	0.19	0.21	0.23	0.25	0.27	0.29	0.32	0.35	0.38	0.42	0.45	0.49	0.54	0.59
0.23	0.25	0.27	0.29	0.32	0.35	0.38	0.41	0.45	0.49	0.53	0.58	0.63	0.69	0.75	0.82
0.00	0.00	0.00	0.00	0.00	0.00	0.00	0.00	0.00	0.00	0.00	0.00	0.00	0.00	0.00	0.00
0.00	0.00	0.00	0.00	0.00	0.00	0.00	0.00	0.00	0.00	0.00	0.00	0.00	0.00	0.00	0.00
1.83	2.00	2.18	2.38	2.59	2.82	3.08	3.35	3.66	3.99	4.34	4.73	5.16	5.63	6.13	6.68
4.09	4.46	4.86	5.29	5.77	6.29	6.86	7.47	8.15	8.88	9.68	10.55	11.50	12.53	13.66	14.89
1.44	1.32	1.21	1.11	1.01	0.93	0.85	0.78	0.71	0.65	0.60	0.55	0.50	0.46	0.42	0.39
8.83	10.15	11.36	12.46	13.48	14.40	15.25	16.03	16.75	17.40	18.00	18.55	19.05	19.51	19.93	20.31

172

Thiru Arooran Sugars — Export Capacity (MW) in Season 6.67 — 12/30/92
Leveraged Financing: Option 8, High Duties — 90% Availability

Costs & Investments

Variable Costs		$/kWh	Inflation Rate (%/year)	Year 0	1	2	3	4	5
				Million Dollars					
	Fuel	0.0094989	9%	0	0.11	0.44	0.44	0.48	0.52
	Bagasse	0.0081285	9%	0	0.15	0.60	0.60	0.65	0.71
	Coal	0.0176266	9%	0	-0.04	-0.16	-0.16	-0.17	-0.19
	Trash	0.0218403	9%	0	0.00	0.00	0.00	0.00	0.00
	Wood	0.0176266	9%	0	0.00	0.00	0.00	0.00	0.00
	Oil	0.0203924	9%	0	0.00	0.00	0.00	0.00	0.00
	Labor	0.0023773	9%	0	0.05	0.19	0.19	0.21	0.23
	Skilled	0.001163	9%	0	0.02	0.08	0.08	0.08	0.09
	Unskilled	0.0018143	9%	0	0.03	0.12	0.12	0.13	0.14
	Spare Parts	NA	NA	0	0.00	0.00	0.00	0.00	0.00
	O&M	0.0077123	9%	0	0.12	0.50	0.50	0.54	0.59
	Management	0.0015	9%	0.05	0.02	0.10	0.10	0.11	0.11
	Total Financial Variable Costs			0.05	0.31	1.23	1.23	1.34	1.46
Discounted Variable Cost Stream	($M)	Total	8.48	Annual 0.05	0.26	0.87	0.73	0.67	0.61
Summed Discounted Cost Stream	($M)			0.05	0.31	1.17	1.90	2.57	3.18

-173-

6	7	8	9	10	11	12	13	14	15	16	17	18	19	20	21
0.57	0.62	0.68	0.74	0.80	0.88	0.96	1.04	1.14	1.24	1.35	1.47	1.60	1.75	1.90	2.08
0.77	0.84	0.92	1.00	1.09	1.19	1.30	1.41	1.54	1.68	1.83	1.99	2.17	2.37	2.58	2.81
-0.20	-0.22	-0.24	-0.26	-0.29	-0.31	-0.34	-0.37	-0.40	-0.44	-0.48	-0.52	-0.57	-0.62	-0.68	-0.74
0.00	0.00	0.00	0.00	0.00	0.00	0.00	0.00	0.00	0.00	0.00	0.00	0.00	0.00	0.00	0.00
0.00	0.00	0.00	0.00	0.00	0.00	0.00	0.00	0.00	0.00	0.00	0.00	0.00	0.00	0.00	0.00
0.00	0.00	0.00	0.00	0.00	0.00	0.00	0.00	0.00	0.00	0.00	0.00	0.00	0.00	0.00	0.00
0.25	0.27	0.30	0.32	0.35	0.38	0.42	0.45	0.50	0.54	0.59	0.64	0.70	0.76	0.83	0.91
0.10	0.11	0.12	0.13	0.14	0.15	0.16	0.18	0.19	0.21	0.23	0.25	0.27	0.30	0.32	0.35
0.15	0.17	0.18	0.20	0.21	0.23	0.25	0.28	0.30	0.33	0.36	0.39	0.43	0.46	0.51	0.55
0.00	0.00	0.00	0.00	0.00	0.00	0.99	1.49	0.00	0.00	0.00	0.00	0.00	0.00	0.00	0.00
0.84	0.70	0.77	0.83	0.91	0.99	1.08	1.18	1.28	1.40	1.52	1.66	1.81	1.97	2.15	2.35
0.13	0.14	0.15	0.16	0.18	0.19	0.21	0.23	0.25	0.27	0.30	0.32	0.35	0.38	0.42	0.46
1.59	1.73	1.89	2.06	2.24	2.44	3.66	4.39	3.16	3.45	3.76	4.10	4.47	4.87	5.31	5.78
0.56	0.51	0.47	0.43	0.39	0.36	0.45	0.46	0.28	0.25	0.23	0.21	0.20	0.18	0.16	0.15
3.74	4.25	4.72	5.15	5.54	5.90	6.36	6.81	7.09	7.34	7.58	7.79	7.98	8.16	8.33	8.48

174

Thiru Arooran Sugars — Export Capacity (MW) in Season 6.67 — 12/30/92

Leveraged Financing: Option 8, High Duties — 90% Availability

Investment & Fixed Costs									
	Investment in Fixed Plant ($ M)			5.68	8.53				
	Equity ($ M) =	10.00%		0.57	0.85				
Loan 1	Loan Outstanding			2.27	5.88	6.38	6.96	7.58	8.26
	Interest Payments			0.00	0.00	0.00	0.00	0.00	0.00
	Principal Payments			0.00	0.00	0.00	0.00	0.00	0.00
	Interest During Grace Period			0.00	0.00	0.57	0.63	0.68	0.74
Loan 2	Loan Outstanding			2.84	7.35	7.98	7.34	6.58	5.68
	Interest Payments			0.00	0.00	-1.52	-1.39	-1.24	-1.06
	Principal Payments			0.00	0.00	-0.64	-0.76	-0.90	-1.07
	Interest During Grace Period			0.00	0.00	0.72	0.00	0.00	0.00
Loan 3	Loan Outstanding			0.00	0.00	0.00	0.00	0.00	0.00
	Interest Payments			0.00	0.00	0.00	0.00	0.00	0.00
	Principal Payments			0.00	0.00	0.00	0.00	0.00	0.00
Other Cash Flows	Interest During Construction			0.49	1.26	0.00	0.00	0.00	0.00
	Div. to Equity Investors	0%		0.00	0.00	0.00	0.00	0.00	0.00
Total Investment & Financing Costs				0.57	0.85	2.15	2.14	2.14	2.13
Total Costs				0.62	1.16	3.38	3.37	3.47	3.59
Discounted Total Cost Stream	($M)	Total	18.66	Annual	0.62	0.97	2.39	2.00	1.73	1.50
Summed Discounted Cost Stream	($M)				0.62	1.59	3.98	5.98	7.71	9.22
Total Financial Cash Flows					-0.62	-1.16	-0.22	-0.21	-0.03	0.16
Discounted Cash Flow Stream	($M)	Total	1.65	Annual	-0.62	-0.97	-0.16	-0.13	-0.02	0.07
Summed Discounted Cash Flows	($M)				-0.62	-1.59	-1.75	-1.88	-1.89	-1.83

125

9.01	9.82	10.70	11.66	11.66	10.39	9.01	7.50	5.86	4.07	2.12	0.00	0.00	0.00	0.00	0.00
0.00	0.00	0.00	-1.05	-1.05	-0.94	-0.81	-0.68	-0.53	-0.37	-0.19	0.00	0.00	0.00	0.00	0.00
0.00	0.00	0.00	-1.06	-1.27	-1.38	-1.51	-1.64	-1.79	-1.95	-2.12	0.00	0.00	0.00	0.00	0.00
0.81	0.88	0.96	1.05	0.00	0.00	0.00	0.00	0.00	0.00	0.00	0.00	0.00	0.00	0.00	0.00
4.61	3.33	1.81	0.00	0.00	0.00	0.00	0.00	0.00	0.00	0.00	0.00	0.00	0.00	0.00	0.00
-0.85	-0.61	-0.33	0.00	0.00	0.00	0.00	0.00	0.00	0.00	0.00	0.00	0.00	0.00	0.00	0.00
-1.28	-1.52	-1.81	0.00	0.00	0.00	0.00	0.00	0.00	0.00	0.00	0.00	0.00	0.00	0.00	0.00
0.00	0.00	0.00	0.00	0.00	0.00	0.00	0.00	0.00	0.00	0.00	0.00	0.00	0.00	0.00	0.00
0.00	0.00	0.00	0.00	0.00	0.00	0.00	0.00	0.00	0.00	0.00	0.00	0.00	0.00	0.00	0.00
0.00	0.00	0.00	0.00	0.00	0.00	0.00	0.00	0.00	0.00	0.00	0.00	0.00	0.00	0.00	0.00
0.00	0.00	0.00	0.00	0.00	0.00	0.00	0.00	0.00	0.00	0.00	0.00	0.00	0.00	0.00	0.00
0.00	0.00	0.00	0.00	0.00	0.00	0.00	0.00	0.00	0.00	0.00	0.00	0.00	0.00	0.00	0.00
0.00	0.00	0.00	0.00	0.00	0.00	0.00	0.00	0.00	0.00	0.00	0.00	0.00	0.00	0.00	0.00
0.00	0.00	0.00	0.00	0.00	0.00	0.00	0.00	0.00	0.00	0.00	0.00	0.00	0.00	0.00	0.00
2.13	2.13	2.14	2.11	2.32	2.32	2.32	2.32	2.32	2.32	2.32	0.00	0.00	0.00	0.00	0.00
3.72	3.86	4.03	4.16	4.56	4.76	5.97	6.71	5.48	5.76	6.08	4.10	4.47	4.87	5.31	5.78
1.31	1.14	1.00	0.87	0.80	0.70	0.74	0.70	0.48	0.42	0.38	0.21	0.20	0.18	0.16	0.15
10.53	11.67	12.67	13.54	14.34	15.04	15.78	16.48	16.96	17.39	17.76	17.98	18.17	18.35	18.51	18.66
0.37	0.59	0.83	1.13	1.21	1.53	0.88	0.76	2.67	3.11	3.60	6.45	7.03	7.67	8.36	9.11
0.13	0.18	0.21	0.24	0.21	0.23	0.11	0.08	0.23	0.23	0.22	0.34	0.31	0.28	0.26	0.24
-1.70	-1.52	-1.31	-1.08	-0.86	-0.64	-0.53	-0.45	-0.22	0.01	0.24	0.57	0.88	1.16	1.42	1.65

-176-

Thiru Arooran Sugars — Export Capacity (MW) in Season — 17.67 — 1/1/93

Full Avoided Cost: Option 9, High Duties — 90% Availability

Technical & Generation Cost Summary

		$US	Local Currency
Total Annual Electricity Production	kWh	172,039,775	
Total Annual Electricity Export	kWh	126,459,775	
Average Power Export	MW	17.6	
Total Investment	Millions	$38.87	1,068.37
Average Electricity Generation Cost	mills/kWh	58.64	1.64
Average Power Purchase Price	mills/kWh	97.40	2.73
Average System Avoided Cost	mills/kWh	99.45	2.78
Generation Cost Using Supplemental Fuels			
-trash	mills/kWh	N/A	N/A
-oil/gas	mills/kWh	N/A	N/A
-coal	mills/kWh	44.34	1.24
Net employment in power generation	days/year	16,300	

Financial & Economic Analysis Summary

		Financial		Economic	
		$US	Local Currency	$US	Local Currency
Present Value of Benefits	Millions	$79.27	2,219.45	$90.06	2,521.82
Present Value of Costs	Millions	$63.52	1,778.50	$63.54	1,779.12
Net Present Value	Millions	$15.75	440.94	$26.52	742.70
Benefit Cost Ratio:		1.25		1.42	
Internal Rate of Return (pre-tax)		25.00%		29.33%	
Internal Rate of Return (post-tax)		16.42%		NA	
Annualized Benefit Cost Ratio		1.01%		1.60%	
Payback Period (undiscounted)	years	4		NA	
Fuel Netback Value	per MBTU	$3.06	85.62	$4.23	118.42
Average Fuel Cost	per MBTU	$0.75	21.04	NA	
Total Displaced Oil Value per Year	Millions	$4.46	124.75	$4.46	124.75
Displaced Electric System Oil Use per Year	Millions	$4.46	124.75	$4.46	124.75
Displaced Oil Used in Host per Year	Millions	$0.00	0.00	$0.00	0.00

Note: Dollar figures are in $ Millions unless otherwise indicated — Discount Rate = 19.00%

Thiru Arooran Sugars
Leveraged Financing: Option 9, High Duties

Export Capacity (MW) in Season 17.67 1/1/93
90% Availability

Technical & Generation Cost Summary

		$US	Local Currency
Total Annual Electricity Production	kWh	172,039,775	
Total Annual Electricity Export	kWh	126,459,775	
Average Power Export	MW	17.6	
Total Investment	Millions	$38.87	1,068.37
Average Electricity Generation Cost	mills/kWh	85.11	2.38
Average Power Purchase Price	mills/kWh	74.66	2.09
Average System Avoided Cost	mills/kWh	99.45	2.78
Generation Cost Using Supplemental Fuels			
-trash	mills/kWh	N/A	N/A
-oil/gas	mills/kWh	N/A	N/A
-coal	mills/kWh	70.81	1.98
Net employment in power generation	days/year	18,300	

Financial & Economic Analysis Summary

		Financial		Economic	
		$US	Local Currency	$US	Local Currency
Present Value of Benefits	Millions	$60.76	1,701.30	$90.06	2,521.82
Present Value of Costs	Millions	$56.23	1,574.53	$63.54	1,779.12
Net Present Value	Millions	$4.53	126.77	$26.52	742.70
Benefit Cost Ratio:		1.08		1.42	
Internal Rate of Return (pre-tax)		25.02%		29.33%	
Internal Rate of Return (post-tax)		14.08%		NA	
Annualized Benefit Cost Ratio		0.35%		1.60%	
Payback Period (undiscounted)	years	1		NA	
Fuel Netback Value	per MBTU	$1.96	54.90	$4.23	118.42
Average Fuel Cost	per MBTU	$0.75	21.04	NA	
Total Displaced Oil Value per Year	Millions	$4.46	124.75	$4.46	124.75
Displaced Electric System Oil Use per Year	Millions	$4.46	124.75	$4.46	124.75
Displaced Oil Used in Host per Year	Millions	$0.00	0.00	$0.00	0.00

Note: Dollar figures are in $ Millions unless otherwise indicated

Discount Rate = 19.00%

178

Thiru Arooran Sugars | Export Capacity (MW) In Season | 17.67 | 1/1/93
Leveraged Financing: Option 9, High Duties | 90% Availability

Financial Analysis: Summary

Year						0	1	2	3	4	5
Total Revenues & Benefits					(financial)	0.00	0.00	9.45	9.45	10.30	11.22
Total Costs						1.60	3.37	10.03	10.01	10.37	10.76
Total Financial Cash Flows	**Full Avoided Cost Contracts**					-1.60	-3.37	-0.59	-0.57	-0.07	0.46
Discounted Cash Flow Stream	($M)	Total	4.55	Annual		-1.60	-2.83	-0.42	-0.34	-0.04	0.19
Summed Discounted Cash Flows	($M)					-1.60	-4.44	-4.85	-5.19	-5.23	-5.03

179

6	7	8	9	10	11	12	13	14	15	16	17	18	19	20	21
12.23	13.33	14.53	15.84	17.27	18.82	20.51	22.36	24.37	26.57	28.96	31.56	34.40	37.50	40.87	44.55
11.20	11.69	12.23	12.72	13.92	14.60	18.06	20.23	17.04	18.00	19.05	13.86	15.11	16.46	17.95	19.56
1.03	1.64	2.30	3.12	3.35	4.22	2.45	2.13	7.34	8.57	9.91	17.70	19.30	21.04	22.93	24.99
0.36	0.49	0.57	0.65	0.59	0.62	0.30	0.22	0.64	0.63	0.61	0.92	0.84	0.77	0.71	0.65
-4.67	-4.18	-3.61	-2.96	-2.37	-1.75	-1.45	-1.22	-0.58	0.05	0.66	1.58	2.42	3.20	3.90	4.55

180

Thiru Arooran Sugars — Export Capacity (MW) in Season — 17.67 — 1/1/93
Leveraged Financing: Option 9, High Duties — 90% Availability

Detailed Financial Analysis

Revenues & Benefits

				Year	0	1	2	3	4	5
Season 1 (#days)	255	$/kWh	Inflation (%/year)							
Capital	Peak	0.0450734	9%		0.00	0.00	1.82	1.82	1.98	2.16
	Offpeak	0.0321953	9%		0.00	0.00	1.82	1.82	1.98	2.16
Energy	Peak	0.0371271	9%		0.00	0.00	1.50	1.50	1.63	1.78
	Offpeak	0.0371271	9%		0.00	0.00	2.10	2.10	2.29	2.49
Season 2 (#days)	80									
Capital	Peak	0.0450734	9%		0.00	0.00	0.56	0.56	0.61	0.66
	Offpeak	0.0321953	9%		0.00	0.00	0.56	0.56	0.61	0.66
Energy	Peak	0.0371271	9%		0.00	0.00	0.46	0.46	0.50	0.54
	Offpeak	0.0371271	9%		0.00	0.00	0.64	0.64	0.70	0.76
Other output benefits (additional product)		0			0.00	0.00	0.00	0.00	0.00	0.00
Other Cost-Savings Benefits (Displ. Ref. Egy.)		0			0.00	0.00	0.00	0.00	0.00	0.00
Total Revenues & Benefits: 1. Avoided Energy Payments Only				**(financial)**	**0.00**	**0.00**	**4.70**	**4.70**	**5.12**	**5.58**
Total Revenues & Benefits: 2. Full Avoided Cost Contracts				**(financial)**	**0.00**	**0.00**	**9.45**	**9.45**	**10.30**	**11.22**
Discounted Benefit Stream ($M)		Total	60.78	Annual	0.00	0.00	6.67	5.60	5.13	4.70
Summed Disc. Benefit Stream ($M)					0.00	0.00	6.67	12.27	17.41	22.11

TOO

6	7	8	9	10	11	12	13	14	15	16	17	18	19	20	21
2.36	2.57	2.80	3.05	3.33	3.63	3.95	4.31	4.69	5.12	5.58	6.08	6.63	7.22	7.87	8.58
2.36	2.57	2.80	3.05	3.33	3.63	3.95	4.31	4.69	5.12	5.58	6.08	6.63	7.22	7.87	8.58
1.94	2.12	2.31	2.51	2.74	2.99	3.25	3.55	3.87	4.22	4.59	5.01	5.46	5.95	6.49	7.07
2.72	2.96	3.23	3.52	3.84	4.18	4.56	4.97	5.41	5.90	6.43	7.01	7.64	8.33	9.08	9.90
0.72	0.78	0.85	0.93	1.02	1.11	1.21	1.32	1.43	1.56	1.70	1.86	2.02	2.21	2.40	2.62
0.72	0.78	0.85	0.93	1.02	1.11	1.21	1.32	1.43	1.56	1.70	1.86	2.02	2.21	2.40	2.62
0.59	0.65	0.70	0.77	0.84	0.91	0.99	1.08	1.18	1.29	1.40	1.53	1.67	1.82	1.98	2.16
0.83	0.90	0.99	1.07	1.17	1.28	1.39	1.52	1.65	1.80	1.96	2.14	2.33	2.54	2.77	3.02
0.00	0.00	0.00	0.00	0.00	0.00	0.00	0.00	0.00	0.00	0.00	0.00	0.00	0.00	0.00	0.00
0.00	0.00	0.00	0.00	0.00	0.00	0.00	0.00	0.00	0.00	0.00	0.00	0.00	0.00	0.00	0.00
6.08	6.63	7.22	7.87	8.58	9.36	10.20	11.11	12.12	13.21	14.39	15.69	17.10	18.64	20.32	22.15
12.23	13.33	14.53	15.84	17.27	18.82	20.51	22.36	24.37	26.57	28.96	31.56	34.40	37.50	40.87	44.55
4.31	3.95	3.61	3.31	3.03	2.78	2.54	2.33	2.13	1.95	1.79	1.64	1.50	1.38	1.26	1.15
26.42	30.36	33.98	37.29	40.32	43.10	45.64	47.97	50.10	52.06	53.85	55.49	56.99	58.37	59.63	60.78

182

Thiru Arooran Sugars | Export Capacity (MW) In Season | 17.67 | 1/1/93
Leveraged Financing: Option 9, High Duties | 90% Availability

Costs & Investments

Variable Costs		$/kWh	Inflation Rate (%/year)	Year	0	1	2	3	4	5
					Million Dollars					
	Fuel	0.0184756	9%		0	0.58	2.34	2.34	2.55	2.78
	Bagasse	0.0081285	9%		0	0.15	0.60	0.60	0.65	0.71
	Coal	0.0176266	9%		0	0.44	1.74	1.74	1.90	2.07
	Trash	0.0218403	9%		0	0.00	0.00	0.00	0.00	0.00
	Wood	0.0176266	9%		0	0.00	0.00	0.00	0.00	0.00
	Oil	0.0203924	9%		0	0.00	0.00	0.00	0.00	0.00
	Labor	0.001116	9%		0	0.05	0.19	0.19	0.21	0.23
	Skilled	0.0004359	9%		0	0.02	0.08	0.08	0.08	0.09
	Unskilled	0.0006801	9%		0	0.03	0.12	0.12	0.13	0.14
	Spare Parts	NA	NA		0	0.00	0.00	0.00	0.00	0.00
	O&M	0.0079078	9%		0	0.34	1.36	1.36	1.48	1.62
	Managemer	0.0015	9%		0.05	0.06	0.26	0.26	0.28	0.31
	Total Financial Variable Costs				0.05	1.04	4.15	4.15	4.52	4.93
Discounted Variable Cost Stream	($M)	Total	28.37	Annual	0.05	0.87	2.93	2.46	2.25	2.06
Summed Discounted Cost Stream	($M)				0.05	0.92	3.85	6.31	8.56	10.63

183

6	7	8	9	10	11	12	13	14	15	16	17	18	19	20	21
3.03	3.30	3.59	3.92	4.27	4.66	5.07	5.53	6.03	6.57	7.16	7.81	8.51	9.28	10.11	11.02
0.77	0.84	0.92	1.00	1.09	1.19	1.29	1.41	1.54	1.68	1.83	1.99	2.17	2.37	2.58	2.81
2.25	2.46	2.68	2.92	3.18	3.47	3.78	4.12	4.49	4.90	5.34	5.82	6.34	6.91	7.53	8.21
0.00	0.00	0.00	0.00	0.00	0.00	0.00	0.00	0.00	0.00	0.00	0.00	0.00	0.00	0.00	0.00
0.00	0.00	0.00	0.00	0.00	0.00	0.00	0.00	0.00	0.00	0.00	0.00	0.00	0.00	0.00	0.00
0.00	0.00	0.00	0.00	0.00	0.00	0.00	0.00	0.00	0.00	0.00	0.00	0.00	0.00	0.00	0.00
0.25	0.27	0.30	0.32	0.35	0.38	0.42	0.45	0.50	0.54	0.59	0.64	0.70	0.76	0.83	0.91
0.10	0.11	0.12	0.13	0.14	0.15	0.16	0.18	0.19	0.21	0.23	0.25	0.27	0.30	0.32	0.35
0.15	0.17	0.18	0.20	0.21	0.23	0.25	0.28	0.30	0.33	0.36	0.39	0.43	0.46	0.51	0.55
0.00	0.00	0.00	0.00	0.00	0.00	2.72	4.08	0.00	0.00	0.00	0.00	0.00	0.00	0.00	0.00
1.76	1.92	2.09	2.28	2.49	2.71	2.95	3.22	3.51	3.83	4.17	4.55	4.96	5.40	5.89	6.42
0.33	0.36	0.40	0.43	0.47	0.51	0.56	0.61	0.67	0.73	0.79	0.86	0.94	1.02	1.12	1.22
5.37	5.85	6.38	6.95	7.58	8.26	11.73	13.90	10.70	11.66	12.71	13.86	15.11	16.46	17.95	19.56
1.89	1.73	1.59	1.45	1.33	1.22	1.45	1.45	0.94	0.86	0.79	0.72	0.66	0.60	0.55	0.51
12.52	14.25	15.84	17.29	18.62	19.84	21.30	22.75	23.68	24.54	25.33	26.05	26.71	27.31	27.86	28.37

184

Thiru Arooran Sugars
Leveraged Financing: Option 9, High Duties

Export Capacity (MW) in Season 17.67 1/1/93
90% Availability

Investment & Fixed Costs										
	Investment in Fixed Plant ($ M)				15.55	23.32				
	Equity ($ M) =		10.00%		1.55	2.33				
Loan 1	Loan Outstanding				6.22	16.08	17.45	19.03	20.74	22.60
	Interest Payments				0.00	0.00	0.00	0.00	0.00	0.00
	Principal Payments				0.00	0.00	0.00	0.00	0.00	0.00
	Interest During Grace Period				0.00	0.00	1.57	1.71	1.87	2.03
Loan 2	Loan Outstanding				7.77	20.10	21.82	20.08	18.00	15.54
	Interest Payments				0.00	0.00	-4.15	-3.79	-3.38	-2.90
	Principal Payments				0.00	0.00	-1.74	-2.07	-2.47	-2.94
	Interest During Grace Period				0.00	0.00	1.96	0.00	0.00	0.00
Loan 3	Loan Outstanding				0.00	0.00	0.00	0.00	0.00	0.00
	Interest Payments				0.00	0.00	0.00	0.00	0.00	0.00
	Principal Payments				0.00	0.00	0.00	0.00	0.00	0.00
Other Cash Flows	Interest During Construction				1.33	3.44	0.00	0.00	0.00	0.00
	Div. to Equity Investors		0%		0.00	0.00	0.00	0.00	0.00	0.00
Total Investment & Financing Costs					1.55	2.33	5.89	5.87	5.85	5.84
Total Costs					1.60	3.37	10.03	10.01	10.37	10.76
Discounted Total Cost Stream	($M)	Total	56.23	Annual	1.60	2.83	7.09	5.94	5.17	4.51
Summed Discounted Cost Stream	($M)				1.60	4 44	11.52	17.46	22.63	27.14
Total Financial Cash Flows					-1.60	-3.37	-0.59	-0.57	-0.07	0.46
Discounted Cash Flow Stream	($M)	Total	4.55	Annual	-1.60	-2.83	-0.42	-0.34	-0.04	0.19
Summed Discounted Cash Flows	($M)				-1.60	-4.44	-4.85	-5.19	-5.23	-5.03

24.64	26.86	29.27	31.91	31.89	28.42	24.64	20.53	16.04	11.14	5.81	0.00	0.00	0.00	0.00	0.00
0.00	0.00	0.00	-2.87	-2.87	-2.56	-2.22	-1.85	-1.44	-1.00	-0.52	0.00	0.00	0.00	0.00	0.00
0.00	0.00	0.00	-2.89	-3.47	-3.78	-4.12	-4.49	-4.89	-5.33	-5.81	0.00	0.00	0.00	0.00	0.00
2.22	2.42	2.63	2.87	0.00	0.00	0.00	0.00	0.00	0.00	0.00	0.00	0.00	0.00	0.00	0.00
12.60	9.11	4.95	0.00	0.00	0.00	0.00	0.00	0.00	0.00	0.00	0.00	0.00	0.00	0.00	0.00
-2.34	-1.68	-0.91	0.00	0.00	0.00	0.00	0.00	0.00	0.00	0.00	0.00	0.00	0.00	0.00	0.00
-3.49	-4.16	-4.95	0.00	0.00	0.00	0.00	0.00	0.00	0.00	0.00	0.00	0.00	0.00	0.00	0.00
0.00	0.00	0.00	0.00	0.00	0.00	0.00	0.00	0.00	0.00	0.00	0.00	0.00	0.00	0.00	0.00
0.00	0.00	0.00	0.00	0.00	0.00	0.00	0.00	0.00	0.00	0.00	0.00	0.00	0.00	0.00	0.00
0.00	0.00	0.00	0.00	0.00	0.00	0.00	0.00	0.00	0.00	0.00	0.00	0.00	0.00	0.00	0.00
0.00	0.00	0.00	0.00	0.00	0.00	0.00	0.00	0.00	0.00	0.00	0.00	0.00	0.00	0.00	0.00
0.00	0.00	0.00	0.00	0.00	0.00	0.00	0.00	0.00	0.00	0.00	0.00	0.00	0.00	0.00	0.00
0.00	0.00	0.00	0.00	0.00	0.00	0.00	0.00	0.00	0.00	0.00	0.00	0.00	0.00	0.00	0.00
0.00	0.00	0.00	0.00	0.00	0.00	0.00	0.00	0.00	0.00	0.00	0.00	0.00	0.00	0.00	0.00
5.83	5.84	5.85	5.76	6.34	6.34	6.34	6.34	6.34	6.34	6.34	0.00	0.00	0.00	0.00	0.00
11.20	11.69	12.23	12.72	13.92	14.60	18.06	20.23	17.04	18.00	19.05	13.86	15.11	16.46	17.95	19.56
3.94	3.46	3.04	2.66	2.44	2.15	2.24	2.11	1.49	1.32	1.18	0.72	0.66	0.60	0.55	0.51
31.09	34.55	37.59	40.25	42.69	44.85	47.09	49.19	50.69	52.01	53.19	53.91	54.57	55.17	55.73	56.23
1.03	1.64	2.30	3.12	3.35	4.22	2.45	2.13	7.34	8.57	9.91	17.70	19.30	21.04	22.93	24.99
0.36	0.49	0.57	0.65	0.59	0.62	0.30	0.22	0.64	0.63	0.61	0.92	0.84	0.77	0.71	0.65
-4.67	-4.18	-3.61	-2.96	-2.37	-1.75	-1.45	-1.22	-0.58	0.05	0.66	1.58	2.42	3.20	3.90	4.55

186

APPENDIX B3:

Financial Spreadsheets:
VSSK

VSSK, Sangli | Export Capacity (MW) in Season | 12.04 | 10/8/92

100% Equity: Option 6, High Duties, No Lignite | 89% Availability

Technical & Generation Cost Summary

		$US	Local Currency
Total Annual Electricity Production	kWh	125,049,744	
Total Annual Electricity Export	kWh	89,180,544	
Average Power Export	MW	13.9	
Total Investment	Millions	$18.38	514.69
Average Electricity Generation Cost	mills/kWh	42.17	1.18
Average Power Purchase Price	mills/kWh	69.02	1.93
Average System Avoided Cost	mills/kWh	80.82	2.26
Generation Cost Using Supplemental Fuels			
-trash	mills/kWh	N/A	N/A
-oil/gas	mills/kWh	N/A	N/A
-coal	mills/kWh	N/A	N/A
Net employment in power generation	days/year	18,300	

Financial & Economic Analysis Summary

		Financial		Economic	
		$US	Local Currency	$US	Local Currency
Present Value of Benefits	Millions	$38.85	1,087.92	$29.46	824.96
Present Value of Costs	Millions	$31.48	881.51	$31.21	873.89
Net Present Value	Millions	$7.37	206.41	($1.75)	-48.93
Benefit Cost Ratio:		1.23		0.94	
Internal Rate of Return (pre-tax)		24.92%		15.42%	
Internal Rate of Return (post-tax)		24.92%		NA	
Annualized Benefit Cost Ratio		0.96%		-0.26%	
Payback Period (undiscounted)	years	3		NA	
Fuel Netback Value	per MBTU	$1.99	55.66	$0.86	24.06
Average Fuel Cost	per MBTU	$0.41	11.50	NA	
Total Displaced Oil Value per Year	Millions	$1.72	48.27	$1.72	48.27
Displaced Electric System Oil Use per Year	Millions	$1.72	48.27	$1.72	48.27
Displaced Oil Used in Host per Year	Millions	$0.00	0.00	$0.00	0.00

Note: Dollar figures are in $ Millions unless otherwise indicated | Discount Rate = 19.00%

VSSK, Sangli — Export Capacity (MW) in Season — 12.04 — 10/8/92

Leveraged Financing Option 6, High Duties, No Lignite — 89% Availability

Technical & Generation Cost Summary

		$US	Local Currency
Total Annual Electricity Production	kWh	125,049,744	
Total Annual Electricity Export	kWh	89,180,544	
Average Power Export	MW	13.9	
Total Investment	Millions	$18.38	514.69
Average Electricity Generation Cost	mills/kWh	59.39	1.66
Average Power Purchase Price	mills/kWh	58.58	1.64
Average System Avoided Cost	mills/kWh	80.82	2.26
Generation Cost Using Supplemental Fuels			
-trash	mills/kWh	N/A	N/A
-oil/gas	mills/kWh	N/A	N/A
-coal	mills/kWh	N/A	N/A
Net employment in power generation	days/year	18,300	

Financial & Economic Analysis Summary

		Financial		Economic	
		$US	Local Currency	$US	Local Currency
Present Value of Benefits	Millions	$32.87	920.26	$29.46	824.96
Present Value of Costs	Millions	$30.03	840.90	$31.21	873.89
Net Present Value	Millions	$2.83	79.37	($1.75)	-48.93
Benefit Cost Ratio:		1.09		0.94	
Internal Rate of Return (pre-tax)		24.61%		15.42%	
Internal Rate of Return (post-tax)		24.61%		NA	
Annualized Benefit Cost Ratio		0.41%		-0.26%	
Payback Period (undiscounted)	years	1		NA	
Fuel Netback Value	per MBTU	$1.39	38.85	$0.86	24.08
Average Fuel Cost	per MBTU	$0.41	11.50	NA	
Total Displaced Oil Value per Year	Millions	$1.72	48.27	$1.72	48.27
Displaced Electric System Oil Use per Year	Millions	$1.72	48.27	$1.72	48.27
Displaced Oil Used in Host per Year	Millions	$0.00	0.00	$0.00	0.00

Note: Dollar figures are in $ Millions unless otherwise indicated — Discount Rate = 19.00%

159

VSSK, Se[illegible] Export Capacity (MW) in Season 12.04 10/8/92
Leveraged Financing: Option 6, High Duties, No Lignite 89% Availability

Financial Analysis: Summary

					Year	0	1	2	3	4	5
Total Revenues & Benefits					**(financial)**	**0.00**	**0.00**	**5.11**	**5.11**	**5.57**	**6.07**
Total Costs						**1.41**	**3.27**	**4.96**	**4.95**	**5.14**	**5.34**
Total Financial Cash Flows	**Full Avoided Cost Contracts**					**-1.41**	**-3.27**	**0.15**	**0.16**	**0.43**	**0.72**
Discounted Cash Flow Stream	($M)	**Total**	**2.83**		Annual	-1.41	-2.75	0.10	0.09	0.21	0.30
Summed Discounted Cash Flows	($M)					-1.41	-4.16	-4.06	-3.96	-3.75	-3.45

190

6	7	8	9	10	11	12	13	14	15	16	17	18	19	20	21
6.61	7.21	7.86	8.57	9.34	10.18	11.09	12.09	13.18	14.36	15.66	17.07	18.60	20.28	22.10	24.09
5.57	5.83	6.11	6.37	6.97	7.33	9.01	10.07	8.61	9.11	9.66	7.27	7.92	8.63	9.41	10.26
1.04	1.38	1.74	2.19	2.36	2.85	2.09	2.02	4.57	5.25	5.99	9.80	10.68	11.64	12.69	13.83
0.37	0.41	0.43	0.46	0.42	0.42	0.26	0.21	0.40	0.39	0.37	0.51	0.47	0.43	0.39	0.36
-3.08	-2.67	-2.24	-1.78	-1.36	-0.94	-0.69	-0.48	-0.08	0.31	0.68	1.19	1.66	2.08	2.48	2.83

191

VSSK, Sangli | Export Capacity (MW) in Season | 12.04 | 10/8/92
Leveraged Financing: Option 6, High Duties, No Lignite | 89% Availability

Detailed Financial Analysis

Revenues & Benefits

				Year	0	1	2	3	4	5
Season 1 (#days)	200	$/kWh	Inflation (%/year)							
Capital	Peak	0.0834491	9%		0.00	0.00	1.07	1.07	1.17	1.27
	Offpeak	0.0278164	9%		0.00	0.00	1.07	1.07	1.17	1.27
Energy	Peak	0.0289286	9%		0.00	0.00	0.37	0.37	0.40	0.44
	Offpeak	0.0196429	9%		0.00	0.00	0.76	0.76	0.82	0.90
Season 2 (#days)	102									
Capital	Peak	0.0532192	9%		0.00	0.00	0.50	0.50	0.55	0.60
	Offpeak	0.0177397	9%		0.00	0.00	0.50	0.50	0.55	0.60
Energy	Peak	0.0289286	9%		0.00	0.00	0.27	0.27	0.30	0.33
	Offpeak	0.0196429	9%		0.00	0.00	0.56	0.56	0.61	0.66
Other output benefits (additional product)		0			0.00	0.00	0.00	0.00	0.00	0.00
Other Cost-Savings Benefits (Displ. Ref. Egy.)		0			0.00	0.00	0.00	0.00	0.00	0.00
Total Revenues & Benefits: 1. Avoided Energy Payments Only				(financial)	**0.00**	**0.00**	**1.96**	**1.96**	**2.14**	**2.33**
Total Revenues & Benefits: 2. Full Avoided Cost Contracts				(financial)	**0.00**	**0.00**	**5.11**	**5.11**	**5.57**	**6.07**
Discounted Benefit Stream ($M)		Total	32.87	Annual	0.00	0.00	3.61	3.03	2.78	2.54
Summed Disc. Benefit Stream ($M)					0.00	0.00	3.61	6.64	9.41	11.96

192

6	7	8	9	10	11	12	13	14	15	16	17	18	19	20	21
1.39	1.51	1.65	1.79	1.96	2.13	2.32	2.53	2.76	3.01	3.28	3.58	3.90	4.25	4.63	5.05
1.39	1.51	1.65	1.79	1.96	2.13	2.32	2.53	2.76	3.01	3.28	3.58	3.90	4.25	4.63	5.05
0.48	0.52	0.57	0.62	0.68	0.74	0.81	0.88	0.96	1.04	1.14	1.24	1.35	1.47	1.61	1.75
0.98	1.07	1.16	1.27	1.38	1.51	1.64	1.79	1.95	2.13	2.32	2.53	2.75	3.00	3.27	3.56
0.65	0.71	0.78	0.85	0.92	1.00	1.09	1.19	1.30	1.42	1.55	1.68	1.84	2.00	2.18	2.38
0.65	0.71	0.78	0.85	0.92	1.00	1.09	1.19	1.30	1.42	1.55	1.68	1.84	2.00	2.18	2.38
0.35	0.39	0.42	0.46	0.50	0.55	0.60	0.65	0.71	0.77	0.84	0.92	1.00	1.09	1.19	1.29
0.72	0.79	0.86	0.94	1.02	1.11	1.21	1.32	1.44	1.57	1.71	1.87	2.03	2.22	2.42	2.63
0.00	0.00	0.00	0.00	0.00	0.00	0.00	0.00	0.00	0.00	0.00	0.00	0.00	0.00	0.00	0.00
0.00	0.00	0.00	0.00	0.00	0.00	0.00	0.00	0.00	0.00	0.00	0.00	0.00	0.00	0.00	0.00
2.54	2.76	3.01	3.29	3.58	3.90	4.25	4.64	5.05	5.51	6.01	6.55	7.13	7.78	8.48	9.24
6.61	7.21	7.86	8.57	9.34	10.18	11.09	12.09	13.18	14.36	15.66	17.07	18.60	20.28	22.10	24.09
2.33	2.13	1.95	1.79	1.64	1.50	1.38	1.26	1.15	1.06	0.97	0.89	0.81	0.74	0.68	0.62
14.28	16.42	18.37	20.16	21.80	23.30	24.68	25.94	27.09	28.15	29.12	30.00	30.82	31.56	32.24	32.87

193

VSSK, Sangli | Export Capacity (MW) in Season | 12.04 | 10/8/92

Leveraged Financing: Option 6, High Duties, No Lignite | 89% Availability

Costs & Investments

Variable Costs			Year	0	1	2	3	4	5
	$/kWh	Inflation Rate (%/year)		Million Dollars					
Fuel	0.0129131	9%		0	0.29	1.15	1.15	1.26	1.37
Bagasse	0.0092095	9%		0	0.29	1.15	1.15	1.26	1.37
Coal	0.017922	9%		0	0.00	0.00	0.00	0.00	0.00
Trash	0.0222063	9%		0	0.00	0.00	0.00	0.00	0.00
Wood	0.017922	9%		0	0.00	0.00	0.00	0.00	0.00
Oil	0.0221333	9%		0	0.00	0.00	0.00	0.00	0.00
Labor	0.0015354	9%		0	0.05	0.19	0.19	0.21	0.23
Skilled	0.0005998	9%		0	0.02	0.08	0.08	0.08	0.09
Unskilled	0.0009356	9%		0	0.03	0.12	0.12	0.13	0.14
Spare Parts	NA	NA		0	0.00	0.00	0.00	0.00	0.00
O&M	0.0051449	9%		0	0.16	0.64	0.64	0.70	0.76
Management	0.0015	9%		0.05	0.05	0.19	0.19	0.20	0.22
Total Financial Variable Costs				0.05	0.54	2.17	2.17	2.37	2.58
Discounted Variable Cost Stream ($M)	Total	14.86	Annual	0.05	0.46	1.54	1.29	1.18	1.08
Summed Discounted Cost Stream ($M)				0.05	0.51	2.04	3.33	4.51	5.60

194

6	7	8	9	10	11	12	13	14	15	16	17	18	19	20	21
1.49	1.63	1.77	1.93	2.11	2.29	2.50	2.73	2.97	3.24	3.53	3.85	4.19	4.57	4.98	5.43
1.49	1.63	1.77	1.93	2.11	2.29	2.50	2.73	2.97	3.24	3.53	3.85	4.20	4.57	4.98	5.43
0.00	0.00	0.00	0.00	0.00	0.00	0.00	0.00	0.00	0.00	0.00	0.00	0.00	0.00	0.00	0.00
0.00	0.00	0.00	0.00	0.00	0.00	0.00	0.00	0.00	0.00	0.00	0.00	0.00	0.00	0.00	0.00
0.00	0.00	0.00	0.00	0.00	0.00	0.00	0.00	0.00	0.00	0.00	0.00	0.00	0.00	0.00	0.00
0.00	0.00	0.00	0.00	0.00	0.00	0.00	0.00	0.00	0.00	0.00	0.00	0.00	0.00	0.00	0.00
0.25	0.27	0.30	0.32	0.35	0.38	0.42	0.45	0.50	0.54	0.59	0.64	0.70	0.76	0.83	0.91
0.10	0.11	0.12	0.13	0.14	0.15	0.16	0.18	0.19	0.21	0.23	0.25	0.27	0.30	0.32	0.35
0.15	0.17	0.18	0.20	0.21	0.23	0.25	0.28	0.30	0.33	0.36	0.39	0.43	0.46	0.51	0.55
0.00	0.00	0.00	0.00	0.00	0.00	1.29	1.93	0.00	0.00	0.00	0.00	0.00	0.00	0.00	0.00
0.83	0.91	0.99	1.08	1.18	1.28	1.40	1.52	1.66	1.81	1.97	2.15	2.34	2.55	2.78	3.03
0.24	0.26	0.29	0.31	0.34	0.37	0.41	0.44	0.48	0.53	0.58	0.63	0.68	0.74	0.81	0.88
2.82	3.07	3.35	3.65	3.98	4.33	6.01	7.08	5.61	6.12	6.67	7.27	7.92	8.63	9.41	10.26
0.99	0.91	0.83	0.76	0.70	0.64	0.75	0.74	0.49	0.45	0.41	0.38	0.35	0.32	0.29	0.27
6.59	7.50	8.33	9.09	9.79	10.43	11.17	11.91	12.40	12.85	13.27	13.64	13.99	14.31	14.60	14.86

VSSK, Sangli — Export Capacity (MW) in Season 12.04 — 10/8/92

Leveraged Financing: Option 6, High Duties, No Lignite — 89% Availability

Investment & Fixed Costs										
	Investment in Fixed Plant ($ M)				7.35	11.03				
	Equity ($ M) =	10.00%			0.74	1.10				
Loan 1	Loan Outstanding				2.94	7.60	8.25	9.00	9.81	10.69
	Interest Payments				0.00	0.00	0.00	0.00	0.00	0.00
	Principal Payments				0.00	0.00	0.00	0.00	0.00	0.00
	Interest During Grace Period				0.00	0.00	0.74	0.81	0.88	0.96
Loan 2	Loan Outstanding				3.68	9.51	10.32	9.49	8.51	7.35
	Interest Payments				0.00	0.00	-1.96	-1.79	-1.60	-1.37
	Principal Payments				0.00	0.00	-0.82	-0.98	-1.17	-1.39
	Interest During Grace Period				0.00	0.00	0.93	0.00	0.00	0.00
Loan 3	Loan Outstanding				0.00	0.00	0.00	0.00	0.00	0.00
	Interest Payments				0.00	0.00	0.00	0.00	0.00	0.00
	Principal Payments				0.00	0.00	0.00	0.00	0.00	0.00
Other Cash Flows	Interest During Construction				0.63	1.63	0.00	0.00	0.00	0.00
	Div. to Equity Investors	0%			0.00	0.00	0.00	0.00	0.00	0.00
Total Investment & Financing Costs					1.36	2.73	2.78	2.77	2.77	2.76
Total Costs					1.41	3.27	4.96	4.95	5.14	5.34
Discounted Total Cost Stream	($M)	Total	30.03	Annual	1.41	2.75	3.50	2.94	2.56	2.24
Summed Discounted Cost Stream	($M)				1.41	4.16	7.67	10.60	13.16	15.40
Total Financial Cash Flows					-1.41	-3.27	0.15	0.16	0.43	0.72
Discounted Cash Flow Stream	($M)	Total	2.83	Annual	-1.41	-2.75	0.10	0.09	0.21	0.30
Summed Discounted Cash Flows	($M)				-1.41	-4.16	-4.06	-3.96	-3.75	-3.45

196

11.65	12.70	13.84	15.09	15.08	13.44	11.65	9.71	7.58	5.27	2.75	0.00	0.00	0.00	0.00	0.00
0.00	0.00	0.00	-1.36	-1.36	-1.21	-1.05	-0.87	-0.68	-0.47	-0.25	0.00	0.00	0.00	0.00	0.00
0.00	0.00	0.00	-1.37	-1.64	-1.79	-1.95	-2.12	-2.31	-2.52	-2.75	0.00	0.00	0.00	0.00	0.00
1.05	1.14	1.25	1.36	0.00	0.00	0.00	0.00	0.00	0.00	0.00	0.00	0.00	0.00	0.00	0.00
5.96	4.31	2.34	0.00	0.00	0.00	0.00	0.00	0.00	0.00	0.00	0.00	0.00	0.00	0.00	0.00
-1.11	-0.79	-0.43	0.00	0.00	0.00	0.00	0.00	0.00	0.00	0.00	0.00	0.00	0.00	0.00	0.00
-1.65	-1.97	-2.34	0.00	0.00	0.00	0.00	0.00	0.00	0.00	0.00	0.00	0.00	0.00	0.00	0.00
0.00	0.0[illegible]	0.00	0.00	0.00	0.00	0.00	0.00	0.00	0.00	0.00	0.00	0.00	0.00	0.00	0.00
0.00	0.00	0.00	0.00	0.00	0.00	0.00	0.00	0.00	0.00	0.00	0.00	0.00	0.00	0.00	0.00
0.00	0.00	0.00	0.00	0.00	0.00	0.00	0.00	0.00	0.00	0.00	0.00	0.00	0.00	0.00	0.00
0.00	0.00	0.00	0.00	0.00	0.00	0.00	0.00	0.00	0.00	0.00	0.00	0.00	0.00	0.00	0.00
0.00	0.00	0.00	0.00	0.00	0.00	0.00	0.00	0.00	0.00	0.00	0.00	0.00	0.00	0.00	0.00
0.00	0.00	0.00	0.00	0.00	0.00	0.00	0.00	0.00	0.00	0.00	0.00	0.00	0.00	0.00	0.00
0.00	0.00	0.00	0.00	0.00	0.00	0.00	0.00	0.00	0.00	0.00	0.00	0.00	0.00	0.00	0.00
2.76	2.76	2.77	2.73	3.00	3.00	3.00	3.00	3.00	3.00	3.00	0.00	0.00	0.00	0.00	0.00
5.57	**5.83**	**6.11**	**6.37**	**6.97**	**7.33**	**9.01**	**10.07**	**8.61**	**9.11**	**9.66**	**7.27**	**7.92**	**8.63**	**9.41**	**10.26**
1.96	1.73	1.52	1.33	1.22	1.08	1.12	1.05	0.75	0.67	0.60	0.38	0.35	0.32	0.29	0.27
17.36	19.09	20.61	21.94	23.17	24.25	25.36	26.41	27.17	27.84	28.44	28.81	29.16	29.48	29.77	30.03
1.04	**1.38**	**1.74**	**2.19**	**2.36**	**2.85**	**2.09**	**2.02**	**4.57**	**5.25**	**5.99**	**9.80**	**10.68**	**11.64**	**12.69**	**13.83**
0.37	0.41	0.43	0.46	0.42	0.42	0.26	0.[illegible]	0.40	0.39	0.37	0.51	0.47	0.43	0.39	0.36
-3.08	-2.67	-2.24	-1.78	-1.36	-0.94	-0.69	-0.48	-0.08	0.31	0.68	1.19	1.66	2.08	2.48	2.83

197

APPENDIX C:

Model Power Purchase Contract Provisions

ENERGY PURCHASE AGREEMENT
BETWEEN
_____ SUGAR MILL
AND
_____ STATE ELECTRIC BOARD

TABLE OF CONTENTS

1 Parallel Operation: . . . . . Page 2

2 Energy Purchases, Sales, Rates, *Wheeling*, and *Banking*; Billing and Payment: . . . . . Page 2

3 Facilities Owned and Operated by the Mill: . . . . . Page 5

4 Interconnection Facilities Owned by the *SEB*: . . . . . Page 5

5 Continuity of Service: . . . . . Page 6

6 Personnel and System Safety: . . . . . Page 7

7 Metering: . . . . . Page 8

8 Permits and Licenses: . . . . . Page 8

9 Term: . . . . . Page 9

10 Events of Default and Termination: . . . . . Page 9

11 Indemnification: . . . . . Page 11

12 Assignment: . . . . . Page 12

13 Force Majeure: . . . . . Page 12

Draft R
W&B

- 199'

14 Authority to Execute: . . . . . Page 13

15 Liability; Dedication: . . . . . Page 13

16 Conflicts: . . . . . Page 13

17 Miscellaneous: . . . . . Page 15

Appendix A
Mill's Facilities . . . . . Page 18

Appendix B
Payment to the Mill . . . . . Page 21

Appendix C
Blank Invoice . . . . . Page 24

Appendix D
Bank Agreement: . . . . . Page 28

Appendix E
Interconnection facilities owned by the *SEB*: . . . . . Page 30

Appendix F
Wheeling Memorandum . . . . . Page 31

Index of Defined Terms . . . . . Page 32

ENERGY PURCHASE AGREEMENT
BETWEEN
_____ SUGAR MILL
AND
_____ STATE ELECTRIC BOARD

This Contract is made this _____ day of _____ , hereinafter called the *Contract date*, by and between _____ Sugar Mill hereinafter called the *Mill* and the _____ State Electric Board hereinafter called the *SEB*.

WHEREAS, the *Mill* is engaged in the business of sugar manufacturing and in connection therewith owns a small energy-production facility which is located in the state of _____ and is more fully described in Appendix A (see Page 18) attached hereto and made a part hereof; and

WHEREAS, the *SEB* is an operating electric public utility in the state of _____; and

WHEREAS, the *Mill* desires to deliver to the *SEB* electric energy generated by the *Mill's* facility, for simultaneous or subsequent transport to a designated third party, and the *SEB* wishes to charge the *Mill* a fee for such service hereinafter called *Wheeling* and is more fully described in Appendix F (see Page 31) attached hereto and made a part hereof; and

WHEREAS, the *Mill* desires to deliver to the *SEB* electric energy generated by the *Mill's* facility, for credit against future *Mill* purchases of electric energy, and the *SEB* wishes to charge the *Mill* a fee for such service hereinafter called *Banking*; and

WHEREAS, the *Mill* desires to sell to the *SEB* electric energy generated by the *Mill's* facility, and the *SEB* wishes to purchase such energy from the *Mill*, upon the terms and conditions set forth herein;

WHEREAS, the *Mill* desires to sell to the *SEB* capacity supplied by the *Mill's* facility, and the *SEB* wishes to purchase such capacity from the *Mill*, upon the terms and conditions set forth herein;

NOW, THEREFORE, in consideration of the premises and their respective promises herein, the *SEB* and the *Mill* hereby agree as follows:

201

1 **Parallel Operation:**

The *SEB* shall allow the *Mill* to interconnect and operate in parallel with the *SEB's* system subject to the terms and provisions of this Contract.

2 **Energy Purchases, Sales, Rates, *Wheeling*, and *Banking*; Billing and Payment:**

2.1 The *SEB* shall accept all energy made available directly to the *SEB's* system from the *Mill's* facility, which the *Mill* shall deliver pursuant to the terms and conditions of this Contract, the rates for which are fully described in Appendix B (see Page 21) attached hereto and made a part hereof.

2.2 Sales of energy by the *SEB* to the *Mill* shall be governed by the applicable *SEB* tariff for facilities with similar capacity and energy demand and not by this Contract.

2.3 Each month the *Mill* shall prepare an invoice indicating what quantities of electric energy delivered by the *Mill* to the *SEB* during the previous calendar month are designated as *Banked*, *Wheeled*, and sold. All energy delivered by the *SEB* shall be designated in one of three categories and, according to the time of day delivered, either on peak or off peak.

2.3.1 All, or a portion of the value of electric energy delivered on peak may be designated for on peak *Banking*. This energy may be used by the *Mill* for future credit against future energy purchases by the *Mill* from the *SEB*.

2.3.2 All, or a portion of the value of electric energy delivered on peak may be designated for *Wheeling*. This energy may be used by the third party designated in the Wheeling Memorandum in Appendix F (see Page 31) for future credit against energy purchases by the third party from the *SEB*.

2.3.3 All, or a portion of the electric energy delivered on peak may be designated net energy for sale to the *SEB*. This energy shall be purchased by the *SEB* for its own use.

2.3.4 The sum of all of the energy designated in Sections 2.3.1, 2.3.2, and 2.3.3 above shall be equal to the on

-202'

peak energy delivered by the *Mill* to the *SEB* during the month.

2.3.5 All, or a portion of the value of electric energy delivered off-peak may be designated for off-peak *Banking*. This energy may be used by the *Mill* for future credit against future energy purchases by the *Mill* from the *SEB*.

2.3.6 All, or a portion of the value of electric energy delivered off-peak may be designated for *Wheeling*. This energy may be used by the third party designated in the Wheeling Memorandum in Appendix F (see Page 31) for future credit against energy purchases by the third party from the *SEB*.

2.3.7 All, or a portion of the electric energy delivered off peak may be designated net energy for sale to the *SEB*. This energy shall be purchased by the *SEB* for its own use.

2.3.8 The sum of all of the energy designated in Sections 2.3.5, 2.3.6, and 2.3.7 above shall be equal to the off peak energy delivered by the *Mill* to the *SEB* during the month.

2.3.9 The value of electric energy credited to the *Mill* for *Banked* energy shall be equal to the value the *Mill* would have received had the *Mill* sold the energy to the *SEB* at the same on-peak or off-peak time of day.

2.3.10 The value of electric energy credited to the third party for *Wheeled* energy shall be equal to the value the *Mill* would have received had the *Mill* sold the energy to the *SEB* at the same on-peak or off-peak time of day.

2.3.11 *Banked* energy credit in excess of the highest monthly energy purchase, by the *Mill* from the *SEB*, in any of the previous twelve (12) months shall be deemed excess energy. The *SEB* shall pay the *Mill* for the excess *Banked* energy and reduce the *Banked* energy credit by a corresponding amount.

2.4 The invoice shall be delivered to the *SEB* on or before the fifth (5th) working day of the following month hereinafter called the *Invoice date*. Where direct sale of energy by the *Mill* to the *SEB* has occurred, the *SEB* shall make payment on such invoice to the *Mill* within twenty (20) working days of the receipt of the invoice. A blank invoice and sample invoice are illustrated in Appendix C (see Page 24) attached hereto and made a part hereof.

2.5 The rate for all energy delivered by the *Mill* to the *SEB* shall be adjusted upward or downward to compensate for inflation. This adjustment shall be based on an inflator. The inflator will be calculated according to a formula based on a group of indices, hereafter called the Composite Energy Inflation Index (*CEII*). The formula, illustrated in Appendix B (see Page 21), is determined by dividing the *CEII* in effect at the *Invoice date* by the *CEII* in effect at the *Contract date*. The energy price in effect during the billing period will be determined by multiplying the fixed (non-inflated) energy price by the inflator.

2.6 The SEB shall pay, to the Mill, a payment for capacity. This capacity payment shall be in addition to the energy payment and shall only be for energy designated, and delivered, as on peak net energy for sale to the SEB. The monthly payment shall be the price for capacity multiplied by the designated and delivered on peak KWH.

2.7 Any payment not made to the *Mill* on or before the twentieth (20th) working day after receipt of the invoice by the *SEB* shall accrue interest at the highest prevailing rate charged for long term loans by the Indian Development Bank until the outstanding interest and invoiced amounts are paid in full. Partial payments shall be applied first to outstanding but unpaid interest and then to outstanding but unpaid invoiced amounts.

3 Facilities Owned and Operated by the Mill:

3.1 The *Mill* shall furnish, install, own, operate, and maintain equipment and records more fully described in Appendix A (see Page 18). The *Mill* shall follow such operating procedures on its side of the electric interconnection point with the *SEB's* system as are consistent with applicable laws and rules, and the terms and conditions of this Contract.

3.2 All electrical equipment shall be furnished and installed consistent with the orders of the Chief Electrical Inspector to Government.

3.3 The *Mill* further agrees to make no material changes or additions to its facility which, it believes, would have an adverse effect on the *SEB's* system, or amend the single-line diagram, relay list and/or trip scheme of Appendix A (see Page 18) without the *SEB's* prior written agreement. The *SEB* agrees that such agreement shall not be unreasonably withheld.

3.4 Without limiting the foregoing, the *Mill* shall install, operate, and maintain its facility in accordance with accepted good engineering practices in the electric industry. The *Mill's* operation and maintenance schedules and staffing shall be adequate to meet this standard at all times.

4 Interconnection Facilities Owned by the *SEB*:

The *SEB* shall furnish, install, own, operate, and maintain interconnection equipment and records for parallel operation with the *Mill's* facility.

4.1 The *SEB* shall follow such operating procedures on its side of the electric interconnection point with the *Mill* as required to accept energy from the *Mill's* facility.

4.2 Further, the *SEB* shall operate consistent with applicable laws and rules, and the terms and conditions of this Contract.

4.3 All electrical equipment shall be furnished and installed consistent with the orders of the Chief Electrical Inspector to Government.

205

4.4 The interconnection facilities, to be owned by the *SEB*, are set forth in Appendix E (see Page 30), attached hereto and made a part hereof.

5 **Continuity of Service:**

5.1 The *SEB* may require the *Mill* to temporarily curtail, interrupt, or reduce deliveries of energy only when necessary:

5.1.1 for the *SEB* to construct, install, maintain, repair, replace, remove, investigate, or inspect any of its equipment or any part of its system that is affected by the *Mill's* facility,

5.1.2 if the *SEB* determines that the continued operation of the facility may endanger the *SEB's* personnel or electric system, or electric service to the *SEB's* other customers; or

5.1.3 due to a condition of Force Majeure.

5.2 In any such event as described in 5.1.1, 5.1.2 and 5.1.3, the *SEB* shall take all reasonable steps to minimize the number and duration of such interruptions, curtailments, or reductions.

5.3 In any such event as described in 5.1.1, 5.1.2 and 5.1.3, the *SEB* shall not be obligated to accept or pay for any energy from the *Mill*, except for such energy that the *SEB* notifies the *Mill* that it is able to take during this period.

5.4 The *SEB* shall avoid scheduling any event as described in 5.1.1 above to the extent reasonably practical during the *Mill's* operations. Where the scheduling of such an event during the *Mill's* operations cannot be avoided, the *SEB* shall provide the *Mill* with at least twenty-four hours (24) advance oral notice with subsequent written confirmation of any period described in subsection 5.1.1 to allow the *Mill* to cease the delivery of energy or capacity to the *SEB*.

5.5 If the *SEB* fails to comply with the provisions of subsection 5.4 the energy not delivered shall be deemed delivered, and the SEB shall pay the full price of the energy as if the curtailment, described in subsection 5.1.1 had not occurred.

5.6 A claim by the *SEB* that a period referred to in subsections 5.1.2 or 5.1.3 has occurred or will occur is subject to verification by the *Mill* including, but not limited to, inspections of equipment, records and interviews with *SEB* staff.

5.7 In order to allow the *Mill's* facility to remain on-line and to minimize interruptions to *Mill* operations, the *Mill* may provide automatic equipment that will isolate the *Mill's* facility from the *SEB's* system during large system disturbances; provided that such automatic equipment has received the written agreement of the *SEB* prior to installation, to insure compatibility with the *SEB's* system. Such agreement shall be withheld only if such changes or additions endanger the safety of persons or property or have an adverse impact on the electric service of the *SEB's* other customers.

6 **Personnel and System Safety:**

6.1 Notwithstanding any other provisions of this Contract, the *SEB* shall have the right to disconnect the *Mill's* facility from the *SEB's* electric system, if at any time the *SEB* determines that:

6.1.1 the *Mill's* facility may endanger the safety of persons and/or property; and/or

6.1.2 the continued operation of the *Mill's* facility may endanger the integrity of the *SEB's* electric system or have an adverse effect on the electric service of the *SEB's* other customers.

6.2 The *Mill's* facility shall remain disconnected until such time that the condition(s) referred to in 6.1.1 and/or 6.1.2 of this Section have been corrected, and the *SEB* shall not be obligated to accept or pay for any energy from the *Mill* during such period.

6.3 If the *SEB* disconnects the *Mill* from the *SEB's* system, it shall immediately notify the *Mill* by telephone and confirm in writing the reasons for the disconnection. In any such event, the *SEB* shall only be obligated to accept or pay for energy

that the *SEB* notifies the *Mill* it is able to take during this period.

6.4 The claim of occurrence of any event as described in this section shall be subject to verification by the *Mill*.

7 **Metering:**

7.1 The *SEB* will supply, own, and maintain all necessary meters and associated equipment utilized for billing and energy purchase.

7.2 The meters and associated equipment will be tested and read in accordance with accepted good engineering practices in the electric industry.

7.3 The *SEB* will, at least once each year during the term hereof, test metering equipment for accuracy in the presence of a representative of the *Mill*, if the *Mill* elects to have a representative present. If said metering equipment is found to be inaccurate by more than two percent (2%), an adjustment for the full amount of such inaccuracy in past billings will be made within thirty (30) working days by one party to the other on the basis that any inaccuracy so discovered shall be conclusively presumed to have existed for half (1/2) the period between the last meter test and the meter test in which the inaccuracy was discovered.

7.4 The *Mill* shall provide, at no expense to the *SEB*, a suitable location for meters and associated equipment used for billing and energy purchase.

8 **Permits and Licenses:**

The *Mill* shall obtain, at the *Mill's* expense, all authorizations, permits, and licenses required for the construction and operation of the *Mill's* facilities and any interconnection facilities, including but not limited to rights-of-way or easements. The *SEB* shall provide reasonable assistance to the *Mill* to obtain the same if so requested by the *Mill*, with costs to be reimbursed to the *SEB* up to an amount mutually agreed upon in advance.

9 Term:

9.1 Except where terminated by default the term of this contract shall be ten (10) years.

9.2 Except where terminated by default, this Contract provides that, not earlier than seven (7) years after the first day of the month following the *Contract date*, either party may terminate the Contract upon thirty-six (36) months advance written notice.

9.3 If such notice is not given, the contract shall automatically extend on a year-to-year basis until such notice requirement is met.

10 Events of Default and Termination:

10.1 The occurrence of any of the following events at any time during the term of this Contract shall constitute an Event of Default by the *Mill*:

10.1.1 failure to pay to the *SEB* any amount payable and due under this Contract within sixty (60) calendar days after receipt of invoice; or

10.1.2 failure on the part of the *Mill* to use reasonable diligence in operating, maintaining, or repairing the *Mill's* facility, such that the safety of persons and property, the *SEB's* equipment, or the *SEB's* service to others is adversely affected; or

10.1.3 failure or refusal by the *Mill* to perform its material obligations under this Contract; or

10.1.4 abandonment of its interconnection facilities by the *Mill* or the discontinuance by the *Mill* of services covered under this Contract unless such discontinuance is caused by Force Majeure or an event of default by the *SEB*.

10.2 The occurrence of any of the following at any time during the term of this Contract shall constitute an Event of Default by the *SEB*:

10.2.1 failure to pay to the *Mill* any amount payable and due under this Contract within sixty (60) calendar days after receipt of invoice; or

201

10.2.2 failure on the part of the *SEB* to deliver, to the third party, designated and mutually agreed to in Appendix F (see Page 31), electric energy designated by the *Mill* for *Wheeling*, when requested by the third party; or

10.2.3 failure on the part of the *SEB* to deliver, to the *Mill*, electric energy designated by the *Mill* for *Banking*, when requested by the *Mill*; or

10.2.4 failure to use reasonable diligence in operating, maintaining, or repairing the *SEB's* interconnecting facilities, such that the safety of persons or property, the *Mill's* equipment, or the *Mill* is adversely affected; or

10.2.5 failure or refusal by the *SEB* to perform its material obligations under this Contract; or

10.2.6 abandonment of its interconnection facilities by the *SEB* or the discontinuance by the *SEB* of services covered under this Contract, unless such discontinuance is caused by Force Majeure or an event of default by the *Mill*.

10.3 Except for failure to make any payment due within sixty (60) calendar days after receipt of invoice, if an Event of Default by either party shall extend for a period of sixty (60) calendar days after receipt of written notice of such Event of Default from the nondefaulting party, then the nondefaulting party may, at its option, terminate this Contract by delivering written notice of such termination to the party in default.

10.4 The nondefaulting party may also institute such legal action or proceedings or resort to such other remedies as it deems necessary; provided, however, that except for failure to make any payment due, the party not in default shall not terminate this Contract at the end of such sixty (60) day period if the party in default has corrected or commenced appropriate steps to correct such default and is diligently prosecuting same to completion or has instituted the conflict resolution provisions of Section 16 of this Contract and is diligently prosecuting the same to completion. Such termination shall be effective on the date of written notice of termination to the

party in default and shall not prejudice any rights of the nondefaulting party.

10.5 If an event of default under 10.2.1 has occurred, on the sixtieth (60th) day after receipt of the invoice by the *SEB* the late payment by the *SEB* shall be deemed a *Delinquent payment*.

10.5.1 *Delinquent payments* may be forwarded, by the *Mill*, to The Bank of _____ hereinafter called the *Bank*.

10.5.2 Upon receipt, the *Bank* will pay the *Mill* from the receipts of the *SEB* on deposit with the *Bank*.

10.5.3 The *SEB* shall remain in default under section 10.2.1 until the Mill has been paid in full, from what ever source, including interest under section 2.7.

10.5.4 The details of the payment are more fully described in accordance with the agreement between the *SEB* and the *Bank* and attached hereto as Appendix D (see Page 28) and made a part hereof.

10.6 Failure by either the *SEB* or the *Mill* to exercise any of its rights under this Contract shall not constitute a waiver of such rights. Neither party shall be deemed to have waived any failure to perform by the other unless it has made such waiver specifically in writing.

10.7 Either the *SEB* or the *Mill* may terminate this Contract upon notice to the other party, if the *Mill's* facility fails to begin producing electric energy within six years from the commercial operational date shown in Appendix A (see Page 18); initial production of electric energy may be extended by an event of Force Majeure up to a maximum of three (3) years.

11 Indemnification:

11.1 The *Mill* shall indemnify, defend, and hold harmless the *SEB* and its directors, officers, employees and agents, and their respective heirs, successors, legal representatives and assigns, from and against any and all liabilities, damages, costs, expenses (including attorneys' fees), losses, claims, demands,

- 211

action, causes of action, suits, and proceedings of every kind, including those for damage to property of any person or entity (including the *Mill*) and/or for injury to or death of any person (including the *Mill's* employees and agents), which directly or indirectly result from or arise out of or in connection with the negligence or willful misconduct of the *Mill*.

11.2 The *SEB* shall indemnify and hold harmless the *Mill* and its directors, officers, employees and agents, and their respective heirs, successors, legal representatives and assigns, from and against any and all liabilities, damages, costs, expenses (including outside attorneys' fees), losses, claims, demands, actions, causes of action, suits and proceedings of every kind, including those for damage to the property of any person or entity (including the *SEB*) and/or injury to or death of any person (including the *SEB's* employees and agents), which directly or indirectly result from or arise out of or in connection with the negligence or willful misconduct of the *SEB*.

12 Assignment:

This Contract may not be assigned by either the *SEB* or the *Mill* without the consent in writing of the other party, except that either party may assign its rights under this Contract, or transfer such rights by operation of law, to any corporation with which or into which such party shall merge or consolidate or to which such party shall transfer all or substantially all of its assets; provided that such assignee or transferee shall expressly assume, in writing delivered to the other party to this Contract, all of the obligations of the assigning or transferring party under this Contract.

13 Force Majeure:

If any party hereto shall be wholly or partially prevented from performing any of its obligations under this Contract by reason of or through strikes, lightning, rain, earthquake, wind, wind-blown water, riots, fire, flood, invasion, insurrection, tidal wave, civil unrest, accident, the order of any court, judge or civil authority, change in State or National

law, war, any act of God or the public enemy, or any other similar or dissimilar cause reasonably beyond its exclusive control and not attributable to its neglect, then and in any such event, such party shall be excused from whatever performance is prevented by such event to the extent so prevented, and such party shall not be liable for any damage, sanction or loss resulting therefrom.

14 Authority to Execute:

Each respective party represents and warrants as follows:

14.1 Each respective party has all necessary rights, powers and authorities to execute, deliver and perform this Contract.

14.2 The execution, delivery and performance of this Contract by each respective party will not result in a violation of any law or regulation of any governmental authority, or conflict with, or result in a breach of, or cause a default under, any agreement or instrument to which either respective party is a party or by which it is bound. No consent of any person or entity not a party to this Contract, including any governmental authority, is required for such execution, delivery and performance by each respective party.

15 Liability; Dedication:

15.1 Nothing in this Contract shall create any duty to, or standard of care with reference to, or any liability to any person not a party to it.

15.2 No undertaking by one party to the other under any provision of this Contract shall constitute the dedication of that party's system or any portion thereof to the other party or to the public; or shall it affect the status of the *SEB* as a/an _____ public utility or constitute the *Mill* or the *Mill's* facility as a public utility.

16 Conflicts:

16.1 In Sections 3.3 and Appendices A (see Page 18) and E (see Page 30) of this Contract, where the *SEB's* acceptance of equipment, additions, or changes in equipment and their operational setting is required, such acceptance shall not be

unreasonably withheld and shall be based on the *SEB's* existing policies and practices. In the event the acceptance is withheld and the issue is unresolved, a meeting shall be held by the *Mill's* _____(title)_____ and the *SEB's* _____(title)_____ to attempt to resolve the dispute. If the matter remains unresolved, Section 16.2 shall apply.

16.2 To the extent permitted by law, and unless otherwise specified in this Contract, any controversy arising under this Contract that the parties are unable to resolve by mutual agreement shall be submitted to binding arbitration in ___(city)___ in the State of ___(state)____. Any decision of the arbitrators in any such arbitration shall be conclusive as to the matters submitted to them and may be enforced in any court of competent jurisdiction in the State of ___(state)___. Any such rule to the contrary notwithstanding, the issue under arbitration shall be heard and decided by a panel of three (3) arbitrators, of whom one (1) arbitrator shall be designated by the *Mill*, one (1) arbitrator shall be designated by the *SEB*, and the third shall be selected by mutual agreement of the other two. Any decision as to the issue or issues properly before the panel, including the sharing of the costs of arbitration, and joined in by at least two (2) of the members of such panel, shall be final, nonappealable and binding upon the parties.

16.3 The *SEB* shall pay for such electric energy that the *Mill* would otherwise have delivered and the *SEB* could otherwise have taken:

16.3.1 if it is subsequently agreed by the *SEB* or determined, pursuant to the terms of Section 16.1, or 16.2, that no occurrence of Section 5.1.1, 5.1.2, 5.1.3 or 6.1.2 events took place, or;

16.3.2 if it is subsequently agreed by the *SEB* or determined, pursuant to the terms of Section 16.1, or 16.2, that an occurrence of Section 5.1.1, 5.1.2, 5.1.3 or 6.1.2 events did take place but was unnecessary or could have been reasonably completed sooner.

17 **Miscellaneous:**

17.1 Amendments: any waiver, alteration, amendment or modification of this Contract or any part hereof shall not be valid unless in writing and signed by the parties.

17.2 Binding Effect: this Contract shall be binding upon and inure to the benefit of the parties hereto and their respective successors, legal representatives, and permitted assigns.

17.3 Notices: any written notice provided hereunder shall be delivered personally or sent by registered or certified first-class mail, with postage prepaid, to the other party at the following address:

SEB: _____
_____
_____

Mill: _____
_____
_____

17.4 Notice delivered personally shall be deemed to have been given when it is delivered to the office of the *Mill's* _____(title)_____ or to the office of the *SEB's* _____(title)_____ set forth above and actually delivered to such person or left with a responsible person in such office. Notice sent by mail shall be deemed to have been given on the date of actual delivery as evidenced by the date appearing on the return receipt of the mailed Notice. Any party hereto may change its address for written notice by giving written notice of such change to the other party hereto.

17.5 Effect of Section and Appendix Headings: the headings or titles of the several sections and appendices hereof are for convenience of reference and shall not affect the construction or interpretation of any provision of this Contract.

17.6 Non-Waiver: no delay or forbearance of either party in the exercise of any remedy or right will constitute a waiver thereof, and the exercise or partial exercise of a remedy or

right shall not preclude further exercise of the same or any other remedy or rights.

17.7 Relationship of the Parties: nothing in this Contract shall be deemed to constitute either party hereto as partner, agent or representative of the other party or to create any fiduciary relationship between the parties.

17.8 Entire Agreement: this Contract constitutes the entire understanding and agreement between the parties.

17.9 Governing law: this Contract shall be governed by and construed in accordance with the laws of the State of _____.

17.10 No Party Deemed Drafter: the parties agree that no party shall be deemed to be the drafter of this Contract and that in the event this Contract is ever construed by an arbitrator, or a court of law, they shall not construe this Contract or any provision hereof against either party as the drafter of the Contract, the *SEB* and the *Mill* acknowledging that both parties have contributed substantially and materially to the preparation of this Contract.

17.11 Approvals: wherever either *SEB* or *Mill* approvals are required in this Contract, it is understood that such approvals shall not be unreasonably withheld.

17.12 Appendices: appendices A, B, C, D, E and F are made a part of this Contract.

17.13 Attorneys' Fees and Costs of Litigation: in the event that a dispute between the parties is submitted to arbitration, to the courts, or to some other conflict-resolution procedure, the prevailing party shall be entitled to an award of its court costs, other costs of litigation, and reasonable attorneys' fees.

17.14 Standard for Decision Making: all operational decisions or approvals that are to be made at the discretion of either the *SEB* or the *Mill* pursuant to the terms of this Contract, specifications, and design criteria, shall be made or performed according to good engineering practice in the electric industry. Professional decisions or activities undertaken by either party for the purpose of constructing, installing, removing, maintaining or operating any facility

which may affect the operations of the other party's facility or facilities shall be made or performed according to good engineering practice in the electric industry.

18 Conditions Precedent:

The following conditions are subject to fulfillment, prior to the *Contract date*.

18.1 The *SEB* shall deliver to the Mill a Banking Agreement, satisfactory to the Mill, providing for the *SEB's* obligations under the terms of this contract. This Banking Agreement shall become Appendix D (see Page 28) attached hereto and made a part hereof.

18.2 The Mill shall deliver to the *SEB* a Wheeling Memorandum designating the third party recipient of Wheeled energy. This third party recipient shall be approved by the *SEB*. Such approval shall not be unreasonably withheld.

IN WITNESS WHEREOF, the *SEB* and the *Mill* have executed this Contract as of the day and year first above written.

For the Mill	For the *SEB*
by_____	by_____
Its _____	Its _____
by_____	by_____
Its _____	Its _____

Appendix A

Mill's Facilities

Description of Mill's Generation and Conversion Facilities

Name: _____

Location: _____

Mailing Address: _____

Emergency Telephone Number: _____

Payment Mailing Address: _____

Generating Equipment Description: _____

First Synchronize with _____**KV line:** _____

Commercial Operation Date: _____

Capacity Operation Date: _____

1 Mill's Facility:

1.1 For the purpose of this agreement the *Mill's* facility includes all real estate, fixtures, and property owned, controlled, operated or managed in connection with or to facilitate the production, generation, transmission, delivery, or furnishing of electricity owned by the *Mill* and required to interconnect and deliver the electric energy to the *SEB's* system. A single-line diagram, relay list, and trip scheme, reviewed and accepted by the *SEB*, of the *Mill's* facility at the time the Contract is signed, shall be attached to this agreement and made part hereof. The single-line diagram, relay list, and trip scheme shall expressly identify the point of *electrical*

interconnection of the *Mill's* facility to the *SEB's* system. Material changes or additions to the *Mill's* generating and interconnection facilities reflected in the single-line diagram, relay list, and trip scheme shall be approved by the *SEB* pursuant to Section 3.3 of the Contract.

1.2 The *Mill* shall furnish, install, operate and maintain facilities such as breakers, relays, switches, synchronizing equipment, monitoring equipment, and control and protective devices acceptable to the *SEB* as suitable for parallel operation with the *SEB's* system. Such facilities shall be accessible to authorized *SEB* personnel.

1.3 The *Mill* shall furnish, install and maintain in accordance with the *SEB's* requirements all conductors, service switches, fuses, meter sockets, meter and instrument transformer housing and mountings, switchboard meter test buses, meter panels, and similar devices required for service connection and meter installations on the *Mill's* premises.

1.4 The *SEB* shall review and approve the design drawings and Bill of Material for the *Mill's* electrical equipment required to interconnect with the *SEB's* system. The type of electrical equipment, the type of protective relaying equipment and the settings that affect the reliability and safety of operation of the *SEB's* and *Mill's* interconnected system shall be approved by the *SEB*. The *SEB*, at its option, may request to witness operation of control, synchronizing, and protection schemes.

1.5 The *Mill* shall provide a manual disconnect device, which provides a visible break to separate the *Mill's* facilities from the *SEB's* system. Such disconnect device shall be lockable in the OPEN position and be readily accessible to *SEB* personnel at all times.

2 **Operating Procedures:**

2.1 The *SEB* may require periodic reviews of the *Mill's* facilities, maintenance records, available operating procedures and policies, and relay settings, and request changes it deems necessary, in compliance with safety and good engineering

practice, to protect the *SEB's* system from damages resulting from the *Mill's* parallel operation.

2.2 Logs shall be kept by the *Mill* on unit availability, including reasons for planned and forced outages; circuit breaker trip operations; relay operations, including target initiation; and other unusual events, if known. The *SEB* shall have the right to review these logs, especially in analyzing system disturbances. The *Mill* will provide the *SEB* with subsequent written confirmation any time the *Mill* experiences a unit trip. Such confirmation will include the date and time of the occurrence as well as the cause of the unit trip, if known.

2.3 The *Mill* shall limit their ramp rate to less that 2 mw/min.

2.4 The *SEB's* Load Dispatcher shall specify the power factor at which energy is delivered by the *Mill* to the *SEB*. Typical power factor requirements will normally operate in a range of 0.85 to 0.95, but never out of the range of 0.80 to 1.00.

2.5 If the *Mill* is separated from the *SEB's* system for any reason, the *Mill*, under no circumstances, shall re-close into the *SEB's* system without first obtaining specific approval to do so from the *SEB's* Load Dispatcher. Such approval shall be withheld only when such re-closing is not in accordance with the *SEB's* standard practices, policies and procedures.

2.6 The *SEB's* Load Dispatcher will notify the *Mill* whenever the *Mill* must be separated from the *SEB's* system pursuant to Sections 5 and 6 of this Contract. When possible, reasonable advance notice will be given to the *Mill* by the *SEB's* Load Dispatcher.

2.7 The *Mill's* normal maintenance requirements are:
From _____ to _____ annually.

2.8 The *Mill* shall notify the *SEB's* Load Dispatcher prior to synchronizing a generator on to or taking a generator off of the system. Such notification should be as far in advance as reasonably possible under the circumstances causing the action.

Appendix B

Payment to the Mill

Initial Rates for payment to the *Mill* by *SEB* for energy delivered by the *Mill* to *SEB* shall be:

Initial Peak Season Energy Rates:

From _____ to _____

On peak rate Rupees per KWH _____._____

Off peak rate Rupees per KWH _____._____

Initial Off Peak Season Energy Rates:

From _____ to _____

On peak rate Rupees per KWH _____._____

Off peak rate Rupees per KWH _____._____

Appendix B (continued)

1 Each energy rate above shall be adjusted upward or downward

2 according to the inflator described in section 2.4. The *CEII* is composed of

3 the following indices as published by the Reserve Bank of India.

4 On the *Contract date*

5 Index 1 for _____(name & number)_____ at _____% equals _____

6 Index 2 for _____(name & number)_____ at _____% equals _____

7 Index 3 for _____(name & number)_____ at _____% equals _____

8 Index 4 for _____(name & number)_____ at _____% equals _____

9 Total 100%

10 *CEII* equals _____

11

Appendix B (continued)

Rates for payment to the *Mill* by *SEB* for capacity delivered by the *Mill* to *SEB* shall be:

On-Peak Season Capacity Rates: From _____ to _____

Rupees per KWH _____._____

Off-Peak Season Capacity Rates: From _____ to _____

Rupees per KWH _____._____

Fee for wheeling of *Mill* energy by the *SEB* to third parties shall be:

Rupees per KWH _____.____

Fee for banking of energy by the *SEB* for the mill shall be:

Rupees per KWH _____._____

1 Appendix C

2 **Blank Invoice**

3 **Invoice for the Month of _____ from _____ to _____**

4 ***CEII* calculation:**

5 **At *Contract date*:**

6 **Index 1 for _____ at_____% equals _____**

7 **Index 2 for _____ at_____% equals _____**

8 **Index 3 for _____ at_____% equals _____**

9 **Index 4 for _____ at_____% equals _____**

10 ***CEII* at *Contract date* equals _____**

11 **At *Invoice date*:**

12 **Index 1 for _____ at_____% equals _____**

13 **Index 2 for _____ at_____% equals _____**

14 **Index 3 for _____ at_____% equals _____**

15 **Index 4 for _____ at_____% equals _____**

16 ***CEII* at *Invoice date* equals _____**

17

18 ***CEII* at *Invoice date* _____**
19 **divided by**
20 ***CEII* at *Contract date* _____ equals _____ *CEII* adjustment**

Appendix C (continued)

1 **Energy Designation**
2
3 **On Peak**
4 **Electric energy delivered to the *SEB*** _____ **KWH**
5 **Electric energy designated for *Banking*** _____ **KWH**
6 **Electric energy designated for *Wheeling*** _____ **KWH**
7 **Electric energy net for sale to the *SEB*** _____ **KWH**
8
9 **Off Peak**
10 **Electric energy delivered to the *SEB*** _____ **KWH**
11 **Electric energy designated for *Banking*** _____ **KWH**
12 **Electric energy designated for *Wheeling*** _____ **KWH**
13 **Electric energy net for sale to the *SEB*** _____ **KWH**
14

15	**Peak Season Energy Rates:**	**Rate**	**KWH**	***CEII***		
16	**On peak Rupees per KWH**	_____ x	_____ x	_____	=	_____
17	**Off peak Rupees per KWH**	_____ x	_____ x	_____	=	_____
18	**Off Peak Season Energy Rates:**					
19	**On peak Rupees per KWH**	_____ x	_____ x	_____	=	_____
20	**Off peak Rupees per KWH**	_____ x	_____ x	_____	=	_____
21	**Peak Season Capacity Rates:**					
22	**Rupees per KWH**	_____ x	_____ x	_____	=	_____
23	**Off Peak Season Capacity Rates:**					
24	**Rupees per KWH**	_____ x	_____ x	_____	=	_____
25				**Total**		_____

Draft R
W&B

725

Appendix C (continued)

1 Sample Invoice

2 Invoice for the Month of May from 1 May to 31 May 1994

3 *CEII* calculation:

4 At *Contract date*:

5	Index 1 for __Item W___120__ at	20% equals	24.0
6	Index 2 for __Item X____34__ at	25% equals	8.5
7	Index 3 for __Item Y____72__ at	20% equals	14.4
8	Index 4 for __Item Z___246__ at	35% equals	86.1
9	*CEII* at *Contract date* equals		133.0

10

11 At *Invoice date*:

12	Index 1 for __Item W___150__ at	20% equals	30.0
13	Index 2 for __Item X____44__ at	25% equals	11.0
14	Index 3 for __Item Y____80__ at	20% equals	16.0
15	Index 4 for __Item Z___302__ at	35% equals	105.7
16	*CEII* at *Invoice date* equals		162.7

17

Appendix C (continued)

(Sample Invoice continued, example for off season period)

CEII at *Invoice date*	133.0			
divided by				
CEII at *Contract date*	162.7	=	1.22	*CEII* adjustment

Energy Designation		
On Peak		
Electric energy designated for *Banking*	200	KWH
Electric energy designated for *Wheeling*	100	KWH
Electric energy net for sale to the *SEB*	500	KWH
Electric energy Delivered to the *SEB* (total)	800	KWH
Off Peak		
Electric energy designated for *Banking*	250	KWH
Electric energy designated for *Wheeling*	150	KWH
Electric energy net for sale to the *SEB*	650	KWH
Electric energy Delivered to the *SEB* (total)	1,050	KWH

Peak Season Energy Rates:	Rate	KWH	*CEII* rupees	
On peak Rupees per KWH				
Off peak Rupees per KWH				
Off Peak Season Energy Rates:				
On peak Rupees per KWH	1.54 x	500.0 x	1.22 =	939.40
Off peak Rupees per KWH	0.98 x	650.0 x	1.22 =	777.14
Peak Season Capacity Rates:				
Rupees per KWH				
Off Peak Season Capacity Rates:				
Rupees per KWH	1.02 x	500.0 x	1.22 =	622.20
		Total		2,338.74

Appendix D
Bank Agreement:

This is to be a contract between the *SEB* and the *Bank* principally responsible for the administration of the receipts of the *SEB*. This contract is to provide the *Mill* with a senior position against the receivables of the *SEB*. In the event of non-payment by the *SEB* to the *Mill* the *Bank* will be authorized to transfer funds from the account of the *SEB* to the account of the *Mill* to satisfy the delinquent amount owed the *Mill* by the *SEB*. This agreement must contain the following:

1. define the term of the agreement

2. define parties to the agreement

3. define interest to be paid by *SEB* for late payment

4. define order of obligation retirement (i.e., interest first)

5. require that in the event of a change of *Bank* by the *SEB* the new *Bank* will assume the obligations required under the banking agreement

6. notification of the *Mill* by the *SEB* in the event of a change of *Bank* by the *SEB*

7. define the critical operative date & periods

8. provide notification provisions by the *Bank* to the *SEB* when payments are made by the *Bank* to the *Mill*

9. provide notification provisions by the *Mill* to the *Bank* and the *SEB* when payments are delinquent and the *Mill* is requesting payment by the *Bank*

10 define notification provisions by the *Bank* to the *Mill* for minimum balance in the accounts against which delinquent payments will be drawn

11 define the accounts against which delinquent payments to be made to the *Mill* will be drawn

12 define the senior position of the *Mill* against the account of the *SEB* vis-a-vis claims by others

13 provide for automatic payment by the *Bank* for delinquent payments even in dispute and correction for disputed payments after dispute resolution under the Energy Purchase Agreement

14 provide that the *Bank* will make payment to the *Mill* within five (5) working days upon receipt of notification of a delinquent payment by the *Mill*

15 provide that the *SEB* and the *Mill* must seek resolution of payment disputes under the Energy Purchase Agreement and not under the Banking Agreement

1 **Appendix E**

2 **Interconnection facilities owned by the *SEB*:**

Appendix F
Wheeling Memorandum

This document is to be a contract or memorandum of understanding between the designated third party recipient of *Wheeled* energy, the *Mill* and the *SEB*. This memorandum must contain the following:

1. designation of third party recipient of *Wheeled* energy,

2. term of memorandum of understanding,

3. pricing between the *Mill* and the third party,

4. guarantees (if any) between the *Mill* and the third party,

5. procedure for the *Mill* to notify the third party of *Wheeled*-energy accounting between the *Mill* and the *SEB* and

6. a blank and sample invoice from the *Mill* to the third party.

Note: The *SEB* must agree to items 1 and 2 above.

1 Index of Defined Terms

2 Bank

3 The Bank of _____ . . . . . Page 11

4 Banking

5 Mill energy credited against Mill purchases . . . . . Page 1

6 Contract date

7 Date contract is signed . . . . . Page 1

8 Delinquent payment

9 payment due the Mill from the SEB after sixty (60) days . . Page 11

10 Electrical interconnection

11 responsibility division point between Mill and SEB . . . . . Page 18

12 Invoice date

13 date invoice prepared by the Mill is delivered to the SEB . . . Page 4

14 Mill

15 _____ Sugar Mill . . . . . Page 1

16 SEB

17 State Electric Board . . . . . Page 1

18 Wheeling

19 transport of Mill energy by SEB to a third party . . . . . Page 1

The Office of Energy and Infrastructure

The Agency for International Development's Office of Energy and Infrastructure plays an increasingly important role in providing innovative approaches to solving the continuing energy crisis in developing countries. Three problems drive the Office's assistance programs: high rates of energy use and economic growth accompanied by a lack of energy, especially power in rural areas; severe financial problems, including a lack of investment capital, especially in the electricity sector; and growing energy-related environmental threats, including global climate change, acid rain and urban pollution.

To address these problems, the Office of Energy and Infrastructure leverages financial resources of multilateral development banks such as The World Bank and the InterAmerican Development Bank, the private sector and bilateral donors to increase energy efficiency and expand energy supplies, enhance the role of private power, and implement novel approaches through research, adaption and innovation. These approaches include improving power sector investment planning ("least-cost " planning) and encouraging the application of cleaner technologies that use both conventional fossil fuels and renewable energy sources. Promotion of greater private sector participation in the power sector and a wide-ranging training program also help to build the institutional infrastructure necessary to sustain cost-effective, reliable and environmentally sound energy systems integral to broad-based economic growth.

Much of the Office's strategic focus has anticipated and supports recently enacted congressional legislation directing the Office and A.I.D. to undertake a "Global Warming Initiative" to mitigate the increasing contribution of key developing countries to greenhouse gas emissions. This strategy includes expanding least-cost planning activities to incorporate additional countries and environmental concerns, increasing support for feasibility studies in renewable and cleaner fossil energy technologies that focus on site-specific commercial applications, launching a multilateral global energy efficiency initiative and improving the training of host country nationals and overseas A.I.D. staff in areas of energy that can help reduce expected global warming and other environmental problems.

The Office also helps developing countries speed their economic development through promoting technology cooperation between U.S. suppliers and developing country companies, institutions and governments. This effort involves Business Opportunity Identification to define and analyze the range of commercially viable trade and investment opportunities, technologies and services that have a positive impact on the environment and are appropriate for developing countries; Venture Promotion to encourage the involvement of the U.S. private sector; Innovative Finance; and Policy Development assistance to developing counties as they pursue policy and regulatory changes to provide market incentives for environmentally beneficial technologies.

To pursue these activities, the Office of Energy and Infrastructure implements the following six projects: (1) Biomass Energy Systems and Technology Project (BEST); (2) The Renewable Energy Applications and Training Project (REAT); (3) The Private Sector Energy Development Project (PSED); (4) The Energy Training Project (ETP); (5) The Energy Technology Innovation Project (ETIP); and (6) The Energy Efficiency Project (EEP).

The Office of Energy and Infrastructure helps set energy policy direction for the Agency, making its projects available to meet generic needs (such as training), and responding to short-term needs of A.I.D.'s field offices in assisted countries.

Further information regarding the Office of Energy and Infrastructure projects and activities is available in our Program Plan, which can be requested by contacting:

Office of Energy and Infrastructure
Bureau for Research and Development
U.S. Agency for International Development
Room 508, SA-18
Washington, D.C. 20523-1810
Tel: (703) 875-4052