PN-AE1-504

Dynamics of Soil Organic Matter in Tropical Ecosystems

Edited by

David C. Coleman • J. Malcolm Oades • Goro Uehara

Published by:
NifTAL Project
Department of Agronomy and Soil Science
College of Tropical Agriculture and Human Resources
University of Hawaii

1989

Chapter 5. Organic Input Management in Tropical Agroecosystems

Pedro A. Sanchez, Cheryl A. Palm, Lawrence T. Szott, Elvira Cuevas, and Rattan Lal
with James H. Fownes, Paul Hendrix, Haruyoshi Ikawa, Scott Jones, Meine van Noordwijk, and Goro Uehara

Given the basic information presented in the first four chapters, how can one manage organic inputs to enable farmers in tropical regions to have flourishing sustainable agriculture? Sanchez et al. cite results of long-term experiments in parts of Amazonian and Andean Peru which give some initial information to address these major unknowns.

Abstract 125
Historical Perspective 128
Organic Inputs in Tropical Agroecosystems 129
Nutrient Availability 131
- Nutrient Quantity 132
- Quality of Inputs and Timing of Application 137
- Placement of Organic Inputs 138

Roots as Organic Inputs 139
- Temporal and Spatial Distribution of Root Litter 141
- Root Litter Quality 142
- Organic Inputs and Soil Physical Properties 143
- Organic Inputs as Mulches 144
- Organic Inputs as Soil Amendments 147

Organic Inputs and Soil Organic Matter 149
Conclusions and Recommendations 152
- Theme & Research Imperatives 152

Chapter 5

Organic Input Management in Tropical Agroecosystems

Pedro A. Sanchez, Cheryl A. Palm, Lawrence T. Szott, Elvira Cuevas, and Rattan Lal

with James H. Fownes, Paul Hendrix, Haruyoshi Ikawa, Scott Jones, Meine van Noordwijk, and Goro Uehara

Abstract

Organic inputs to the soil must be considered separate from soil organic matter (SOM) to understand properly the physical, chemical, and biological processes involved in the sustainability of tropical agroecosystems. Present management of organic inputs is largely empirical and qualitative. A better understanding of the role of organic inputs on the processes involved in litter decomposition, nutrient cycling, and soil aggregation is needed. The management of organic inputs should be as predictable as that of inorganic inputs, such as fertilizers and lime. The application of organic inputs should promote the synchrony of nutrient release with plant growth demands. Predictive parameters are needed to approach synchrony. Research on decomposition of organic inputs should be conducted in various agroecosystems. Very little is known about the role of root litter in tropical agroecosystems. Six research imperatives are identified for tropical agroecosystems: (1) quantify the biomass and nutrient content of aboveground organic inputs; (2) develop predictive parameters for nutrient release patterns, or quality, of organic inputs; (3) investigate the effect of placement of organic inputs on nutrient

availability; (4) quantify production and nutrient release by roots, identify resource quality parameters (see Chapter 4) that describe root decomposition, and determine the relative importance of roots as sources of nutrients; (5) investigate the effects of quality and placement of organic inputs on soil physical properties; and (6) understand how organic inputs are transformed into functional SOM pools in soils differing in texture, mineralogy, and moisture and temperature regimes. We need reliable field methods for measuring root production and decomposition, transfer from organic inputs into SOM fractions, and transfer processes among SOM pools. The diversity of tropical species and farming systems provides ample combinations of crops and organic inputs for improving tropical agroecosystems.

Agroecosystems differ from natural ecosystems in that large amounts of biomass and nutrients are removed as crops. Nutrient outputs via crop harvests far exceed the other nutrient loss pathways combined. This is shown in Table 1 where a summary of annual crop nutrient budget studies from temperate-region countries is presented. A long-standing principle of sound agriculture is to replace the nutrients lost via crop harvests by adding either inorganic or organic fertilizers. Aside from adding nutrients, organic additions improve soil physical properties and help maintain soil organic matter content, all of which positively affect plant productivity (Allison, 1973). Organic inputs to the soil consist of above- and belowground litter, crop residues, mulches, green manures, animal manures, and sewage. Some of these inputs are grown and recycled on site

Table 1. Summary of nutrient inputs and outputs (kg ha^{-1} yr^{-1}) of 18 crop production systems from the United States, United Kingdom, Netherlands, France, Israel, and Japan. (Mean and standard deviations calculated from data of Frissel, 1978.)

Nutrient inputs or outputs	Nitrogen	Phosphorus	Potassium
Inputs			
Inorganic fertilizer	156 ± 189	39 ± 38	119 ± 188
N fixation	19 ± 39		
Other	13 ± 13	0.4 ± 0.8	9 ± 13
Total	188 ± 75	39 ± 39	127 ± 176
Outputs			
Harvest removal	103 ± 86	16 ± 16	91 ± 13
Denitrification	20 ± 24a	–	–
Leaching	3 ± 8b	nd	nd
Total	127 ± 95	16 ± 6	91 ± 13
Balance	60 ± 93	24 ± 30	37 ± 77

a. Mean of 10 out of 18 data sets reporting denitrification.
b. Mean of 3 out of 18 data sets reporting leaching.
nd = not determined.

(internal to the system), while others are brought in from other sites, thus constituting an external source of nutrients and organic C.

Organic inputs are distinct from soil organic matter (SOM), which can be defined as organic material of biological origin that has undergone partial or complete transformation in the soil and is located below the soil surface. In much of the literature, organic inputs and SOM are lumped together as "organic matter," creating considerable confusion when attempting to evaluate and manage the role of organic inputs compared to that of soil organic matter. We propose, therefore, to discourage using the term *organic matter* and encourage the use of *organic inputs* and *soil organic matter (SOM)*.

Although early agriculture depended heavily on organic inputs, the emphasis shifted to inorganic fertilizers as they became abundant and economically practical. Today, because agricultural development in much of the tropics is largely limited by economic constraints, emphasis must again be placed on use of organic inputs along with chemical fertilizers. This paper briefly reviews

Figure 1. Conceptual model of major pools and transfers of soil organic matter. Numbers indicate focus of research imperatives (see text conclusions).

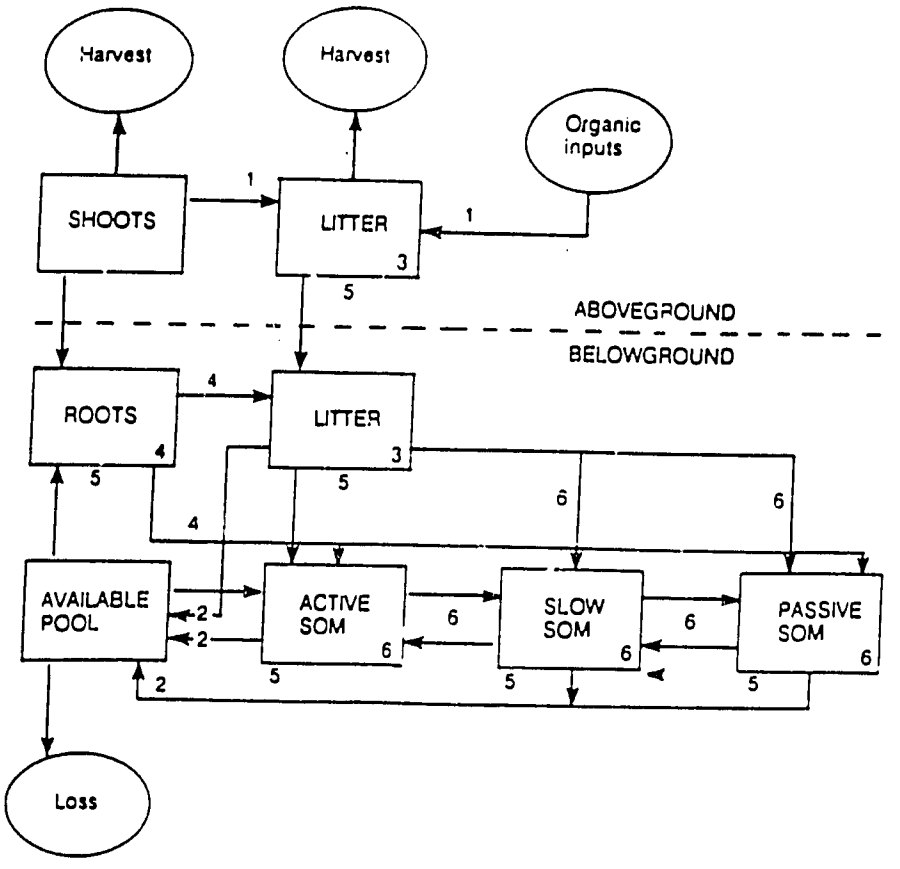

what is known about organic inputs in tropical ecosystems. We address the role of organic inputs on nutrient availability, soil physical properties, and soil organic matter content and composition. These issues are viewed in relation to plant production and how such information can be applied to the efficient management of organic inputs in tropical agroecosystems. A conceptual model is shown in Figure 1.

Historical Perspective

Continuous cultivation of food crops evolved first on flood plains of Mesopotamia and China on soils with ample reserves of weatherable minerals. Use of organic inputs was reported in the Middle East as far back as 2000 BC and later in continuous cropping systems in China, Japan, India, Mexico, Peru, and the Greek and Roman Empires (Allison, 1973). Although some inorganic fertilizers were sporadically used (ashes, lime, and potassium nitrate), continuous cultivation primarily depended on organic nutrient inputs until the beginning of the 20th century.

History also shows that when nutrients removed by crop harvest were not replaced by mineral weathering and organic inputs, such systems became unsustainable. One case was when the feudal system of Europe during the Middle Ages did not provide incentives for returning crop residues to the soil (Loomis, 1978). Another case occurred in the 1800s in the southeastern United States when insufficient use of organic inputs did not permit a stable transition from shifting to continuous cultivation, resulting in widespread erosion and land abandonment (Allison, 1973).

Agricultural research in the second half of the 19th century began to quantify the effects of organic and inorganic inputs. The need to return plant residues to the soil in order to maintain soil organic matter levels was identified (Lawes, 1889). At the same time, sharp crop yield responses to inorganic fertilizers were being shown (Hopkins, 1910). Such research revolutionized temperate-region agriculture in the first half of this century (Tisdale and Nelson, 1956).

Despite intensive use of inorganic fertilizers in modern temperate-zone agriculture, organic input returns remain at high levels, primarily through crop and root residues and animal manures. About 90% of the animal excreta and 68% of the crop residues are returned to the soil in the United States (Bertrand, 1983). Recycling of aboveground crop residues accounts for about half of the N and potassium input but for only 25% of the phosphorus input in the midwestern United States, which is dominated by fertile, intensively fertilized soils; in the acid soil region of the southeastern United States, however, crop yields are generally lower and the absolute amounts of both crop residue returns and fertilizer applications are also lower (Table 2). The proportion of nutrients derived from fertilizers is higher in the less fertile region. Soil organic matter

Table 2. Relative contribution (million kg yr⁻¹) of nutrient inputs from crop residues and fertilizer in two regions in the United States in 1979. (State averages (mean of six states for each region) calculated from data of Lindstrom and Holt, 1983.)

Nutrient input	Midwestern U.S. (Mollisol-dominant) N	P	K	Southeastern U.S. (Ultisol-dominant) N	P	K
Fertilizers	460	129	298	149	40	88
Crop residues	330	44	318	65	8	50
Total	790	173	616	214	48	138
Proportion of crop residues (%)	42	25	52	31	17	36

contents in some fertile, intensively fertilized Mollisols in the midwestern United States have stabilized or increased because of the large amounts of crop residues returned to the soil (W. P. Larson et al., 1978; Barber, 1979).

Our knowledge of the management of inorganic inputs has advanced to the point of quantitative prediction about the correction of plant nutrient deficiencies and the residual effect of fertilizer applications (Barber, 1984). A similar effort is needed for the management of organic inputs (Sanchez and Miller, 1986).

Organic inputs have been studied in detail but from two very different directions. One is a traditional approach in which organic residues are added and crop yields are reported. Unfortunately this approach has seldom been sufficiently rigorous or quantified to provide an understanding for observed differences. The other, a mechanistic approach, has been scientifically rigorous and has provided great detail about biological processes and chemical reactions involving organic additions in natural systems and laboratory experiments. This approach, however, has not provided much insight into the relevance of such processes to the function of agroecosystems. By unifying the two approaches, a predictive understanding can be developed, leading to the design of more efficient tropical agroecosystems.

Organic Inputs in Tropical Agroecosystems

Since very little is known about organic inputs in tropical agroecosystems, we will draw on principles derived from ecological and agronomic research in the temperate zone to guide research objectives. At the same time we must be aware of the differences between tropical and temperate ecosystems and within tropical ecosystems that may preclude extrapolation of results. For example, lowland humid tropical ecosystems have a continuous growing season, whereas temperate ecosystems do not. In the arid and semiarid tropics, the growing

season also may be continuous with adequate water, as in irrigated areas. Rainfed agriculture in the seasonal or semiarid tropics, however, is subject to great spatial and temporal variation in rainfall and unpredictable spacing between rainfall events. These differences affect both the amount of biomass produced and the amount of organic material decomposed in a year, with important implications for the management of organic inputs in tropical agroecosystems.

Differences in predominant soils between climatic zones also have important implications for the management of organic inputs and soil organic matter. Much soil organic matter research has been conducted in the temperate glaciated soils, which are generally fertile, high in pH, and dominated by high-activity, permanent-charge clays. On the other hand, soils of the humid tropics are generally acid, nutrient-deficient, and dominated by low-activity or variable-charge clays (Chapter 3). Soils of the seasonal and semiarid tropics vary widely in these characteristics. These differences in soil conditions are reflected in differences in soil chemical, physical, and biological processes relevant to decomposition of organic inputs, formation and stability of soil organic matter, and nutrient availability.

Soil survey information and Soil Taxonomy (Soil Survey Staff, 1987) describe the distribution and characteristics of different soils and may provide an indication of biomass and nutrient content of above- and belowground inputs for various soil-vegetation systems. For example, taxonomic names or soil characterization data provide qualitative information on the decomposition state of the surface or near-surface litter and the amount and size of roots and pores, as well as quantitative data on chemical and physical properties of the soil.

Tropical agroecosystems also differ from those in temperate zones in that they offer more options for the management of organic inputs. Research in temperate-zone agriculture on type, quality, and quantity of organic inputs has generally focused on crop residues (Ochwald, 1978), with some work on cover crops. There has been less work on the importance of the timing of additions because of the break in growing season. In the tropics, particularly the humid tropics, there exists a greater diversity of agroecosystems. Among these agroecosystems, in addition to continuous cultivation, are short-term fallows, plantations with cover crops, tree-tree systems (such as coffee-*Inga*, or cacao-*Erythrina*) and tree-food crop systems (such as alleycropping). The tropics also house a diversity of plants that are used in agroecosystems and are virtually unknown to temperate-zone agriculture. There are indications that plants growing on acid soils, which include the majority of tropical soils, contain more secondary compounds (polyphenols) than those on neutral soils (McVey et al., 1978; Muller et al., 1987). These secondary compounds may affect decomposition and nutrient release and perhaps even soil organic matter formation.

Farmers make choices about when, where, and how to add various organic inputs and decide on whether crop residues are used as fodder or as a mulch or are incorporated into the soil directly through plowing. In a number of tropical areas, notably the semiarid regions of Africa, nomadic people have started to grow crops in more or less fixed locations (Salzman, 1980). In such circumstances, the use of organic inputs has only recently developed and the quantity, quality, and seasonal variation of organic amendments, notably animal manure, is virtually unknown.

Because many farmers live in areas that are marginal for agriculture and subject to unreliable rainfall, the management of organic inputs in semiarid regions requires particularly careful study. Anthropologists working alongside agronomists and ecologists may help clarify the choices made by farmers for whom locally obtained organic inputs are presently the only option for improving soil fertility.

Nutrient Availability

One of the functions of organic inputs is to supply nutrients to crops. Nutrient release and availability depends on the rate of decomposition, which is controlled in part by temperature, moisture, soil texture, and mineralogy, as well as by the rate of application, placement, timing, and quality of the organic inputs. Much of the knowledge about the process of decomposition in agroecosystems has been obtained from soils dominated by permanent-charge minerals, usually well supplied with bases but limited by N and with microbial populations dominated by bacteria. It is likely that decomposition of organic inputs and subsequent nutrient availability will operate differently in acid, infertile Oxisols and Ultisols with variable-charge minerals, often high in phosphorus-fixation capacity, and with microbial populations presumably dominated by fungi. For example, Cuevas and Medina (1988) found that decomposition of forest litter on Amazonian Oxisols was limited by P, Ca, and Mg rather than by N. This leads to several questions about the controls on decomposition in tropical soils. Are N mineralization/immobilization patterns different in soils dominated by decomposer organisms with higher C/N ratios? Is the mineralization of organic phosphorus similar or different in such soils? In Andosols where microbial activity may be severely limited by P (Munevar and Wollum, 1977), are different ways of managing organic inputs needed? Much has been learned about the interactions between organic substances, microbes, and soil minerals (Huang and Schnitzer, 1986), but very little is known about the consequences of such interactions on plant production at the field level, not only in the tropics but anywhere.

In natural systems, nutrient release from litter and plant uptake of nutrients generally occurs in synchrony, resulting in efficient use of nutrients. In agroecosystems, the two processes of release and uptake are often separated

9

in time, resulting in low nutrient-use efficiency. This is particularly acute with N, where excess amounts are lost by leaching, denitrification, and ammonia volatilization. There are few sound data on the magnitude of such losses (EPA, 1988; White, 1988), but in general only 30 to 50% of the N applied as fertilizer is recovered by most crops to which it is added. Although much of the unaccounted-for N is probably incorporated into SOM or roots, considerable losses do occur. N recovery from organic inputs does not appear to be better than that from inorganic fertilizers in the short term (Smith et al., 1987). However, most studies on N recovery from organic inputs only consider the first year; increases in efficiency may appear if residual, or long-term, effects are considered. An understanding of the processes that control nutrient availability from organic inputs may enable the management of more efficient tropical agroecosystems (Swift, 1985). From a management viewpoint, nutrient availability can be controlled to some extent by the quantity, quality, placement, and timing of organic inputs.

Nutrient Quantity

The amount of nutrients added via organic inputs depends on the mass of organic inputs and the concentration of nutrients in the tissues. Both the biomass and nutrient concentrations will vary with the soil properties, climate, and production system under which the organic input is grown. There is a wide body of knowledge about organic inputs and the nutrients they contain in natural tropical ecosystems such as rainforests (Vitousek and Sanford, 1986) and savannas (Sarmiento, 1984). In spite of abundant reviews, reliable estimates of biomass and nutrient inputs in tropical agroecosystems are few (see reviews by FAO 1975, 1978, 1985; Rosswall, 1980; Robertson et al., 1982; Wetselaar and Ganry, 1982; Cabala-Rosand, 1985; Kang and van der Heide, 1985; Wilson, 1988).

A rough estimate of the aboveground organic input potential of some agroecosystems is shown in Table 3 and compared to that of some natural tropical ecosystems. This table excludes belowground inputs. The following discussion refers to Table 3 and is based on the assumption that all crop residues remain on the soil, which is definitely not the case in many systems where residues are burned *in situ* or are used for fuel or as forage for domestic animals.

Natural Ecosystems

In the natural systems, tropical rainforests, both on acid and more fertile soils, have higher levels of aboveground litter inputs than do tropical savannas (see Table 3). The influence of native soil properties is evident, with lower biomass and nutrient inputs in acid Oxisols and Ultisols than in the more fertile Alfisols and Andosols (Vitousek and Sanford, 1986).

Tropical Food Crops

Carbon and nutrient inputs through aboveground residues for some of the most important grain crops of the tropics at current yield levels are generally less per crop than they are in natural systems (see Table 3). Part of the difference is due to the average crop growth duration of only 4 months rather than the entire year of litterfall in a humid natural system. The only root crop for which adequate data were available, potatoes in the Peruvian highlands, had C inputs as high as those of the natural ecosystems. Although important crops such as grain legumes and cassava are not included in this comparison, crop residue biomass production at present crop yield levels is clearly less than aboveground biomass production of tropical rainforest and savanna ecosystems. But seldom are crops grown only during 4 months of the year and the land is left fallow the rest of the time.

High-Input Systems

A more interesting comparison is between natural systems and tropical farming systems on an annual basis (see Table 3). Examples are divided into high- and low-input cropping systems, defined in terms of chemical and labor inputs (Sanchez and Salinas, 1981). The high-input agroecosystems generally have C and nutrient inputs similar to the natural systems. For example, returning residues in an annual maize-maize-soybean rotation in the Amazon of Peru provides as much C, more N, more P, more K, and similar levels of Ca and Mg than does the litterfall of tropical rainforests on similarly acid soils. Residue return in intensive, flooded rice production exceeds litterfall in tropical rainforests on fertile soils; potassium, in particular, is returned at much higher rates than in the natural system. A high-input agroforestry system on fertile soils of the humid tropics, cacao under *Erythrina* shade, recycles less C and N than the natural system on similar soils. Large areas of acid savannas of tropical America have been converted to intensive soybean production. Studies show that although only one crop can be grown per year, C and nutrient inputs from soybean residues are similar to those of the native savanna except for N and Ca, which far exceed levels in the natural system.

It is necessary to point out that all these high-input production systems are based on intensive use of inorganic fertilizers in addition to the recycling of organic residues. The general conclusion is that C and nutrient input from recycling crop residues in such tropical agroecosystems generally equal or exceed that of the natural systems. This conclusion is a direct result of the application of external sources of nutrients, in most cases inorganic fertilizer, which increases nutrient availability and results in higher plant production. In specific instances, high-input agroecosystems far exceed natural systems in one or more key nutrient inputs (see Table 3).

11

Table 3. Calculated biomass and nutrient content of aboveground organic inputs in some natural and agroecosystems in the tropics.

System description and duration (in parentheses)	Economic yield (Mg ha^{-1})	Yield/ residue ratio	Material	Biomass dry matter (Mg ha^{-1})	Element input (kg ha^{-1})					
					Ca	N	P	K	Ca	Mg
NATURAL ECOSYSTEMS (1 yr)										
Tropical rainforest, acid soils[b]	–	–	Litterfall	8.8	3950	108	3	22	53	17
Tropical rainforest, fertile soils[b]	–	–	Litterfall	10.5	4725	162	9	41	171	37
Tropical savanna, Venezuela[c]	–	–	Litterfall	3.8	1710	25	5	31	10	11
SINGLE CYCLE TROPICAL FOOD CROPS[d]										
Rice (4 months)[e]	2.2	0.8	Straw	2.8	1260	15	2	37	11	7
Maize (4 months)[f]	1.3	0.7	Stover	2.0	900	18	3	19	7	4
Sorghum (5 months)[f]	0.7	0.8	Stover	0.9	405	8	1	10	4	2
Potatoes (4 months)[f]	10.7	0.7	Tops	15.1	6795	17	1	43	14	7
Soybeans (3 months)[g]	1.7	0.7	Stover	2.4	1080	27	2	24	22	8
HIGH-INPUT TROPICAL AGROECOSYSTEMS										
Flooded rice, 2 crops per year (1 yr)[e] 11.0	11.0	1.0	Straw	11.0	4950	59	9	151	43	29
Maize maize-soybean rotation (1 yr)[h] 8.7	8.7	–	Stover	9.3	4185	139	15	98	52	23
Soybeans in the Cerrado (4 mos)[g] 2.3	2.3	0.7	Stover	3.5	1575	86	8	43	32	11
Cacao/Erythrina in Brazil (1 yr)[d] 1.0	1.0	0.2	Leaf litter	6.0	2700	81	14	17	142	42
LOW-INPUT TROPICAL AGROECOSYSTEMS										
Upland rice, rice-cowpea rotation, Peru (1 yr)[i]	4.7	–	Straw/stover	6.0	2700	77	12	188	27	12
Legume-based, (Brachiaria humidicola/ Desmodium ovulifolium) pasture, Colombia (1 yr)[j]	–	–	Leaf litter	7.0	3153	60	5	12	60	13
Alleycropping, Inga edulis (1 yr)[k]	–	–	Tree prunings	6.0	2700	137	10	52	32	–

a. Calculated as 0.45 x biomass dry matter.
b. Vitousek and Sanford (1986).
c. Sarmiento (1984).
d. Crop yields calculated from FAO (1985) for tropical countries.
e. Nutrient content calculated from DeDatta (1981).
f. Nutrient content calculated from Sanchez (1976).
g. Yields from Goedert (1986); nutrient content from Henderson and Kamprath (1970).
h. TropSoils (1987); Sanchez (1976); Sanchez et al. (1983).
i. CEPLAC (1985).
j. Sanchez and Benites (1987).
k. CIAT (1985).
l. Szott (1987).

Low-Input Systems

What is the case for low-input systems where fertilizers and lime are kept to a minimum or not applied at all and where the soil acidity constraint is taken care of by the use of aluminum-tolerant species? Examples are presented in Table 3. An upland rice-cowpea rotation grown after burning a secondary forest without fertilizer additions recycled less C and N but more P and much more K than did the rainforest on similarly acid soils. A low-input, acid-tolerant *Brachiaria humidicola/Desmodium ovalifolium* pasture in Oxisols of the Colombian Llanos returned more C, N, and Ca, similar levels of P and Mg, but less K to the soil than did the tropical savanna ecosystem.

Many low-input agroforestry systems have the potential to equal natural systems in terms of C and nutrient inputs. Szott (1987) showed that an alleycropping system on Ultisols with *Inga edulis* as the leguminous hedgerow produces 6 Mg ha^{-1} yr^{-1} of dry matter prunings containing similar amounts of N and P, higher K, but lower Ca than the natural forest (see Table 3).

Lack of Data

The dry matter and nutrient contents of animal manures used as organic inputs are seldom known. Analysis of the extensive body of literature comparing organic manures with inorganic fertilizers in the tropics shows that results depend largely on the nutrient content of the manures (Sanchez, 1976). In dry tropical Africa, for instance, agropastoralists typically move their animals from place to place according to forage availability. For much of the year, manure is left where it falls and its deliberate incorporation into soils where crops are grown may be confined to the postharvest period when livestock graze on crop residues.

Nutrient contents of organic inputs other than N are seldom reported, but they are extremely important in low-fertility soils. Information on the P, K, S, and micronutrient contents of crop residues and animal manures is scarce. In cereal crops most of the Zn, Cu, Mn, Fe taken up by the plants end up as aboveground crop residues, with some exceptions (Table 4). Sulfur is highly

Table 4. Proportion of nutrients (% in crop residue) accumulated by cereal crops present in aboveground residues. Root residues are ignored. (Data calculated from Sanchez, 1976; DeDatta, 1981.)

Crop	C	N	P	K	Ca	Mg	S	Zn	Cu	Mn	Fe
Rice	56	30	26	80	87	68	38	69	34	91	83
Maize	61	43	35	77	98	70	57	68	57	96	95
Sorghum	56	54	43	86	95	77	1	55	63	78	83

variable. Since many tropical soils are marginal or deficient in S and micronutrients, data about these nutrients are obviously needed.

The first research imperative, therefore, is to quantify the biomass and nutrient content of aboveground organic inputs in tropical agroecosystems. A solid, scientifically rigorous data base obtained on well-characterized soils is the necessary first step toward a better understanding of the processes involved in the management of organic inputs.

Quality of Inputs and Timing of Application

The time at which nutrients are made available to plants is as important as nutrient quantity. In farming systems where trees or shrubs are pruned for green manure, both the total quantity and the ratio of leaves to wood in the organic inputs can be manipulated by frequency and intensity of cutting. The efficiency of nutrient transfer from organic inputs to crops might be managed by varying the quality or the timing of application of organic inputs (Swift, 1985).

Quality of crop residues was originally defined by the C/N ratio (Jensen, 1929). Materials with C/N less than 20 generally decompose quickly and mineralize N immediately, whereas those with wider ratios decompose slowly and even immobilize N. It was also recognized that the type of C compound influenced the rates of decomposition (Tenney and Waksman, 1929). The lignin to N ratio proved to be a better predictor than C/N ratio for leaf litter decomposition in a variety of temperate forest species (Melillo et al., 1982). Recent work suggests that N release from legumes (low C/N, low lignin/N) is better correlated with polyphenolic content than with lignin and N content (Vallis and Jones, 1973; Palm, 1988). Legumes with high N content but different N release patterns have interesting implications for organic input management and is an area that merits further research.

Much has been said about the effect of the quality of organic inputs on N release and availability. Little is known, however, about quality with respect to P availability. This "nitrogen bias" is a result of the N-limitation in many temperate ecosystems, coupled with the difficulty of measuring P availability and mineralization, particularly in high P-fixing soils. Research priority must be given to the management of phosphorus via organic inputs because P often will be the ultimate limitation to crop productivity, especially in the tropics where high P-fixing soils are abundant and where the use of leguminous plants as organic inputs can often solve N limitations. Furthermore, crop residues are usually low in P, because most of this element is concentrated in the grain and is removed by harvest. The quality of organic inputs could affect P availability through (1) the P content or the C-to-P or N-to-P ratio of the material, (2) the size and activity of the soil microbial pool (Hedley et al., 1982), and (3) the interactions between the organic material and the mineral soil.

Some organic inputs, when incorporated into the soil, temporarily reduce aluminum toxicity. The process involved is believed to be a complexation

14

of aluminum in the soil solution by organic acids, polysaccharides, and other initial products of organic input decomposition (Hue et al., 1986). The effect may be temporary because as these products undergo further decomposition, aluminum is released again to the soil solution. Little is known about the influence of organic input quality on aluminum complexation. Are high-quality inputs more effective than low-quality? If they are, this effect, although temporary, may be of agronomic significance when green manures are incorporated on acid soils in low-input systems. Another factor to consider is the reduction of aluminum saturation by the Ca and Mg released from the organic inputs (Wade and Sanchez, 1983).

Criteria that predict nutrient-release patterns will help in the selection and management of organic inputs for a diversity of agroecosystems. Once mineralization/immobilization patterns are known for a variety of plant types (based on some chemical criteria), agroecosystems can be managed more efficiently by selection of organic inputs with nutrient immobilization-release patterns more similar to the nutrient uptake patterns of specific crops. This synchrony of nutrient release and uptake also depends on the appropriate timing of application. A second research imperative, therefore, is to develop predictive parameters for nutrient release patterns, or quality, of organic inputs to tropical agroecosystems.

Emphasis should be placed on characterizing legumes and also on defining quality in terms of phosphorus availability. In the semiarid tropics, where biomass production varies from year to year and decomposition rates are episodic and variable, the development of predictive models is going to be correspondingly more difficult.

Placement of Organic Inputs

The placement of organic additions affects the physical and biological properties of the soil, which has important consequences for the temporal and spatial availability of nutrients and the potential for nutrient loss (see review by Doran and Smith, 1987).

The biological environment for decomposition is quite different for organic inputs left as mulches on the soil surface than for those incorporated into the soil by tillage (Parr and Papendick, 1978; Holland and Coleman, 1987). In general, macrofaunal activities and populations are greater in no-till systems (Lal, 1987; Pashanasi and Lavelle, 1987), and microbial populations may shift from predominantly fungal to bacterial with tillage (Holland and Coleman, 1987). Decomposition is generally faster for incorporated than for surface-applied material. However, much still needs to be known about the subsequent availability of nutrients, given the biological and physical environment in which decomposition takes place. Information is especially lacking for the humid tropics where biological activity is generally high but where, at the same time, temporary reducing conditions can occur in microsites of well-drained soils.

There are several questions of interest with respect to placement of organic inputs and nutrient availability. How do mineralization/immobilization patterns of organic inputs change with changes in macrofaunal or microfaunal populations that are caused by tillage (e.g., Hendrix et al., 1986)? Are N losses through ammonia volatilization due to surface placement of organic inputs significant in acid soils? Are losses of N through denitrification greater with surface application or incorporation of organic inputs in humid, tropical environments? Are these losses significant? What is the interaction between the quality of organic inputs and placement with respect to nutrient availability and losses? How does P availability differ with tillage practice? Answers to questions such as these will help in improving nutrient transfer from organic inputs to crops. A third research imperative, then, is to investigate the effect of placement of organic inputs on nutrient availability in terms of the interaction between soil temperature, moisture, redox potential, soil fauna, and input quality.

Roots as Organic Inputs

Although there is limited information about the nutrient content and quality of aboveground inputs, virtually nothing is known about the role of roots as an organic input. Roots are generally not considered in nutrient cycling studies because of difficulties in measurement. In tropical and temperate natural forest ecosystems, they are known to play a major and often dominant role in nutrient cycling (Fogel, 1980; Cuevas and Medina, 1986). In agroecosystems, fine-root decomposition is likely to be an important source of nutrients because it occurs within the crop rooting zone.

There has been considerable work carried out on root production, turnover, and nutrient release in temperate forests (Safford, 1974; Santantonio et al., 1977; Persson, 1980, 1983; Vogt et al., 1980, 1982; Keyes and Grier, 1981; McClaugherty et al., 1982), but very little is known about root turnover and nutrient release in tropical ecosystems (Jordan and Escalante, 1980; Cuevas and Medina, 1983; Sanford, 1985; Hairiah and van Noordwijk, 1986). In studies carried out in the temperate zone, Fogel (1980) found that in a *Pinus taeda* plantation, the fine root fraction contained 84% of the N in aboveground litterfall but released twice the N during decomposition. Vogt et al. (1982) estimated that fine roots plus mycorrhiza in a stand of *Abies amabilis* cycle about four times the N, six to ten times the P and K, two to three time the Ca, and three to ten times the Mg than that contained in litterfall.

In an Amazon forest on an Oxisol in Venezuela, Cuevas (1983) found that annual fine-root production in the first 10 cm of soil and the root mat above the mineral soil, was 8 Mg ha^{-1} yr^{-1}. Sanford (1985) found that fine root turnover in the upper 10 cm of the same Oxisol was 25% per month. N and phosphorus concentrations of these roots were 2.3% N and 0.11% P, so the quantities of N

16

and P added to the soil by fine root turnover were very large – 190 kg N ha^{-1} yr^{-1} and 9 kg P ha^{-1} yr^{-1}, respectively – assuming no retranslocation of nutrients from the roots before death. Biomass and nutrient fluxes in litterfall for the same forest amounted to 7.6 Mg dry matter ha^{-1} yr^{-1}, 121 kg N ha^{-1} yr^{-1}, and 2 kg P ha^{-1} yr^{-1} (Cuevas and Medina, 1986), indicating that fine-root production and turnover in forests on very infertile soils may be more important for nutrient cycling than litterfall.

Carbon and nutrient inputs from roots in tropical agroecosystems are even more poorly quantified. When determined in a low-input upland rice-cowpea rotation, roots (belowground residue) constituted 11 to 22% of the dry matter and from 5 to 21% of the nutrients accumulated by these crops (Table 5). R. J. Scholes and A. Salazar (personal communication) measured differences in root production among several crops in an Ultisol of Peru. Their estimates indicate that root litter inputs may be on the order of 1–4 Mg ha^{-1} per crop and higher in fertilized systems where crop production is greater, approximately one-third to one-half of the organic inputs to the soil originate from dead roots (Table 6). Assuming two to three crops per year, then, root production in tropical agroecosystems is similar in magnitude to that estimated for tropical forests (Jordan and Escalante, 1980; Cuevas, 1983; Vogt et al., 1986; Berish and Ewel, 1988; R. J. Scholes and A. Salazar, personal communication).

Such estimates, however, are based on root biomass measured near crop harvest; therefore they do not include C and nutrient inputs lost to soil via root turnover, sloughing, or exudation during the crop cycle. Exudates and exfoliates can account for a high proportion of total C transfers belowground (Martin, 1977; Milchunas et al., 1985) and may be more readily decomposable than root litter. Roots may further increase nutrient availability by producing organic acids, surface phosphates, and siderophores (Bowen, 1984).

Table 5. Partitioning of nutrients accumulated (%) by upland rice and cowpea crops in a low-input system in the Amazon. Mean of five upland rice crops and two cowpea crops. (Data from Sanchez and Benites, 1987; R. J. Scholes and A. Salazar, personal communication.)

Crop	Component	Dry matter	Nutrient				
			N	P	K	Ca	Mg
Upland rice	Harvest removal	41	46	67	9	7	32
	Aboveground residue	48	43	25	85	79	63
	Belowground residue	11	11	8	6	14	5
Cowpea	Harvest removal	29	46	51	17	3	29
	Aboveground residue	49	42	35	77	76	52
	Belowground residue	22	12	14	6	21	19

Table 6 Fine-root biomass (ash-free) to a depth of 30 cm, aboveground residues, and grai yields (all in Mg ha^{-1}) of various crops in Ultisols at Yurimaguas, Peru (standard errors for 1 samples in parentheses). Root litter production is assumed to equal fine-root biomass in these annual crops (Data from R. A. Scholes and A. Salazar, personal communication.)

Plant	Fine-root biomass	Aboveground residue	Grain yield
Soybean	1.39 (0.42)	2.76	1.80
Cowpea	1.03 (0.09)	1.70	0.86
Maize	0.97 (0.12)	3.03	3.00
Upland rice	0.62 (0.12)	1.60	1.41

Temporal and Spatial Distribution of Root Litter

A number of questions about the importance of roots as a source of nutrients in tropical agroecosystems relate to temporal and spatial distribution of root litter and root litter quality.

Although annual root litter inputs may be similar in forests and agricultural fields, their temporal distribution is likely to vary between ecosystems. In contrast to forests, where inputs may occur throughout the year or be concentrated during dry periods, most of the root litter inputs in monocultural agroecosystems is believed to occur close to crop harvests. Greater proportional losses of added C and nutrients may occur in agricultural systems than in forests due to peaks in litter inputs in the former. Ladd et al. (1983) showed that retention of organic residues in soils was greater when smaller amounts of substrates were added. These differences would probably be reduced in multiple-cropping systems where harvests are staggered throughout the year or in agroforestry systems where perennial vegetation is present. The magnitude of the effect of the timing of root litter input on soil organic matter and nutrient release in tropical agroecosystems needs further study. Such results may aid the selection of species and their management over time.

The spatial distribution of root litter can be managed by choice of crops having different rooting patterns and by the use of tillage. It is commonly assumed that in agroecosystems based on short-cycle food crops the majority of the roots and root litter is found in the top 20 cm of soil, whereas in systems based on perennial crops more roots are found at greater soil depths. This may or may not be true. Tillage tends to homogenize root litter within a relatively narrow depth interval.

The spatial distribution of root litter also varies with the successional stage of the vegetation. Root distribution follows nutrient distribution in both space and time. In early successional stages when the litter layer is not yet formed, fine roots extend deeper into the soil (Berish, 1982; Bowen and Nambiar, 1984). As the litter layer develops with succession, nutrient distribution is more concentrated near the soil surface and more fine roots are found in the superficial layers. This concept may have important implications in the selection of trees for managed fallows or alleycropping.

Of special relevance here is the possibility of a continuous channel system into the subsoil left by decaying roots of a previous crop or vegetation, provided soil tillage does not disturb continuity. Roots from a cut-over forest may be important for crop production in shifting cultivation because crops are often planted close to old tree stumps. Several deep rooted cover crops (*Centrosema* and *Crotolaria* species, for example) may contribute to subsequent crop growth this way as well. The quantity of organic residue left by the roots is less important than the physical quality in modifying the soil pore system. A shallow coating of organic inputs around the root may help to overcome subsoil aluminum toxicity (Hairiah and van Noordwijk, 1986).

Many of the spatial effects of root litter production on soil physical and biological properties are well known, but a number of intriguing questions regarding the spatial distribution of root litter/nutrient-related processes remain. For example, what is the absolute and relative production of root litter at depths greater than 20 cm in various types of agroecosystems? How do rates of litter production and soil properties change with depth, and how do they interact in determining rates of mineralization/immobilization, denitrification and phosphorus fixation? How does spatial heterogeneity of root litter affect rates of nutrient mineralization/immobilization? Can techniques other than tillage and crop species selection be used to manipulate use efficiency? For example, pruning of woody hedges in alleycropping systems affects the temporal and spatial distribution of hedge root litter and hence nutrient release to the associated crop.

Root Litter Quality

There has been no systematic comparison of the quality of root litter from agricultural crops, perennial crops, and tropical forests. Root litter from forests and crops is likely to differ in degree of homogeneity, proportion of fine roots, quantity of secondary or allelopathic compounds, nutrient concentrations, and the amount of lignin and polyphenols present. In general, small-diameter roots such as those produced by food crops, have comparatively low lignin/N ratios and would be expected to decompose and release nutrients rapidly, whereas decomposition and nutrient release from larger, more lignified root litter would be slower (Amato et al., 1987; Berg et al., 1987). These indices of quality, however, may not be good predictors of root decomposition (McClaugherty

al., 1982); other indices, such as the nonstructural carbohydrates/N ratio, may be better indications of root litter quality (Berg et al., 1987).

Most work related to root decomposition uses fresh roots incubated in mesh bags. Under such conditions, intimate association between roots and soil may not exist; in addition, decomposition rates of fresh material may be different from those of dead roots since nutrient retranslocation from senescing roots is likely to affect quality. Key experiments measuring retranslocation from roots under varying environmental conditions have yet to be performed. Furthermore, the presence of allelopathic compounds may, at times, override the usual determinants of litter quality. Better understanding of the relationship between site fertility and root litter quality, and, indeed, the definition of a parameter that can be used to accurately predict decomposition and nutrient release from root litter are needed. Moreover, controls on root productivity and mortality are still in question (Caldwell, 1979; Marshall and Waring, 1985, Nadelhoffer et al., 1985).

Synchronizing root turnover and decomposition to the benefit of crop plants requires knowledge of the magnitude, spatial distribution, and time course of root production, mortality, and decomposition. Because of methodological difficulties, however, these estimates are still rather crude.

Estimates of total root production during a growing season have to be based on quantification of biomass at one point in time and estimates of root turnover. Techniques for measuring root production based on frequent sampling are subject to serious methodological criticism (Singh et al., 1984). Recently an alternative approach has become available by sequential observations of individual roots behind transparent walls (minirhizotrons) or in holes filled up with inflatable structures, between observations. Simultaneous root consumption by soil fauna, root decay, and root growth can now be recorded (van Noordwijk, 1987; Taylor, 1987). Results so far show turnover varies greatly between crops and soil conditions. Application of these techniques to tropical forests and agroecosystems is badly needed.

In summary, then, a fourth research imperative is to quantify root production and nutrient release by roots in tropical agroecosystems, to identify quality parameters that describe decomposition and nutrient release from roots, and to determine the relative importance of roots as a source of nutrients. Regardless of the answers to the above questions, perhaps the more relevant question with respect to roots is, can they be managed?

Organic Inputs and Soil Physical Properties

This discussion has been limited so far to the role of organic inputs as a source of plant nutrients. In addition to managing nutrient-release patterns from organic inputs, it is possible to manipulate other soil factors to maximize plant growth and nutrient uptake. Organic inputs may be used in two ways to

20

manipulate the physical behavior of soils. They may be used as surface mulches or incorporated into the soil as an amendment.

Organic Inputs as Mulches

In situations where high surface temperatures, rapid dehydration of the seedbed and formations of dense, impervious surface crusts from raindrop impact are serious constraints to seedling emergence and survival, the use of organic inputs as mulches far outweighs the benefits of incorporating them into the soil for their amendment effects.

Mulch mainly regulates soil temperature (Maurya and Lal, 1981) and moisture regime (Figure 2). It buffers and dampens the effects of environmental factors on soils: it lessens the extremes, lowers the temperature maxima in hot and dry conditions, and raises the minima in cold and moist environments (Lal, 1979, 1987). The dampening effect is related to the amount of radiation penetrating the soil surface. The latter is influenced by mulch through radiation absorption, alteration of albedo, and by its physical barrier. While albedo is a function of mulch color, the barrier effect depends on the percentage of ground cover and the thickness of the mulch layer. The albedo is higher from fresh straw mulch than from decayed crop residue.

For the same rate of application, surface application of organic inputs has more drastic effects on soil temperature and moisture regimes than incorporation. Lawson and Lal (1979) studied the effects of rate and method of application of organic inputs on properties of an Alfisol at Ibadan, Nigeria. Mean maximum soil temperature decreased with surface application; with incorporation, mean maximum soil temperature increased with increasing mulch rate (Figure 3). Soil moisture content was also influenced by mulch rate and mode of application (Figure 4). Although the benefits of mulching for moisture retention and temperature regulation are obvious for soils of the seasonal tropics, little is known about such benefits in the humid tropics where water shortages are generally not a problem. Mulching under such conditions may have more negative (pests and diseases) than beneficial effects.

Mulch effects on some soil physical properties are related to activities of soil organisms. For example, surface mulching increases feeding and burrowing of earthworms and termites, which then alters bulk density, macroporosity water retention, and transmission characteristics. In addition, increased production of earthworm casts and arthropod feces may increase the stability of aggregates (Rusek, 1986). Lal et al. (1980) observed that the activity of earthworm *Hyperiodrilus africanus* was linearly related to the mulch rate.

In sandy Alfisols of the semiarid tropics and subtropics, formation of dense, impervious surface crusts caused by raindrop impact on freshly tilled and seeded fields prevent seeds from emerging and subsequently increase runoff and soil loss. Work conducted in Niger on sandy Alfisols, where surface sealing is a major problem, showed marked improvement in water infiltratio

21

Figure 2. Effects of mulch materials and tillage methods on soil moisture reserves in the Masika (rainy) season in Zanzibar, 1980. (Source: Khatibu et al., 1984.)

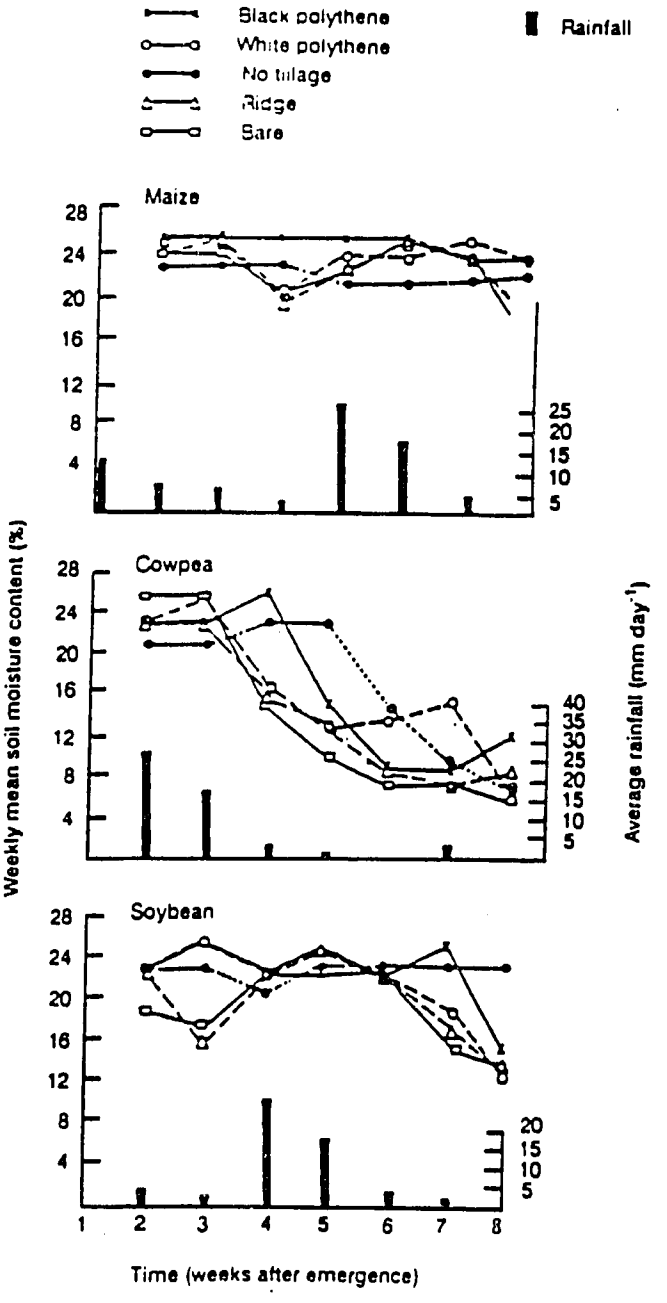

Figure 3. Relationship between average maximum and minimum soil temperatures in the first two weeks after planting, amount of mulch applied, and method of application, 1974. (Source: Lawson and Lal, 1979.)

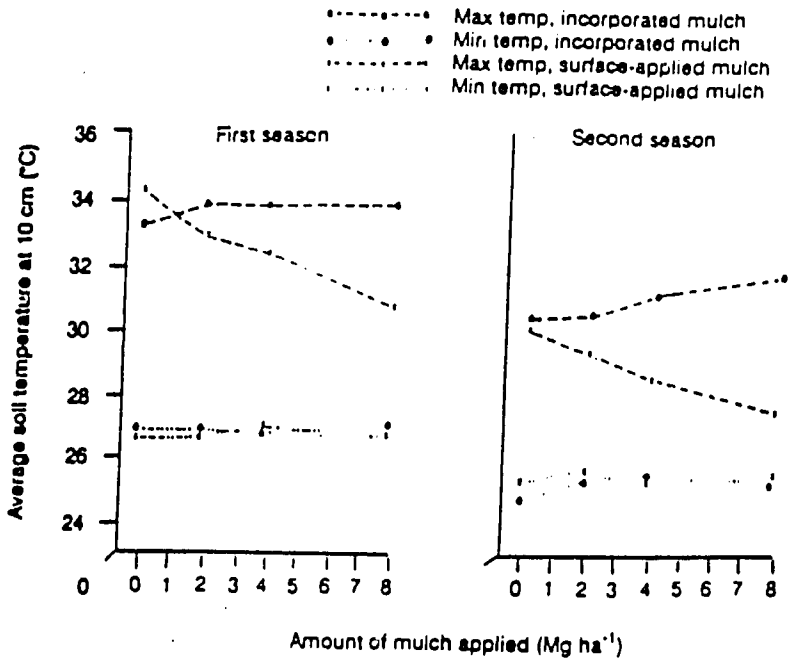

when a woody mulch was left on the surface (TropSoils, 1987). This resulted from an extensive network of channels formed by termite activity. Although the effects are highly beneficial, this practice is limited by the availability of organic inputs.

Mulch invariably decreases soil erosion and often reduces water runoff (Lal, 1984) because it shelters the soil and improves soil physical properties. Some of the effects of mulch are reduction of rainfall impact, improved soil structure and porosity, increased infiltration rate by decreased surface sealing, increased water retention capacity, decreased runoff velocity, and enhanced biological activity. For most soils, runoff and erosion decrease exponentially with increasing mulch rate (Lal, 1976).

The effects of organic inputs on soil physical properties depend on the residence time or quality and placement of the material. The longer the residence time, the more durable the effect. For example, the effects of mulching by rice and maize stover mulch are more pronounced on soil physical

Figure 4. Relationship between mean soil moisture content, amount of mulch applied, and method of application, 1973. (Source: Lawson and Lal, 1979.)

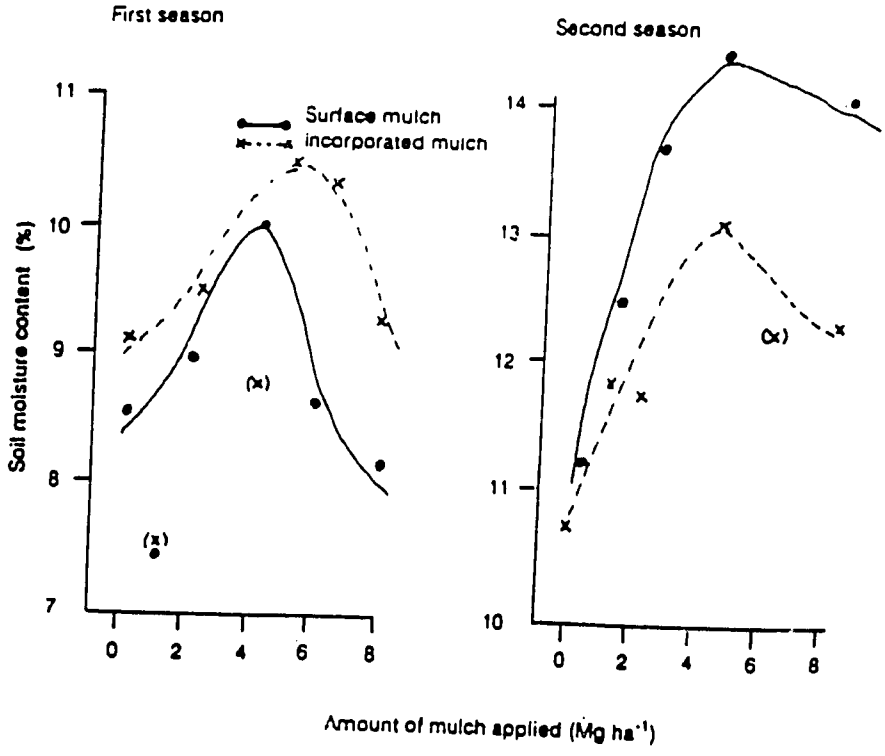

properties than are those of high-quality residues such as cowpea or soybean because cowpea and soybean decompose quickly and have only transient effects on soil structure and water transmission characteristics.

Organic Inputs as Soil Amendments

The value of organic inputs as amendments to improve soil physical conditions may far outweigh their value as nutrient sources. Soils well supplied with organic inputs are generally looser, easier to work, more permeable to water, and less susceptible to drought; they possess a higher capacity to retain nutrients. Measurable effects of organic inputs on soil physical properties are commonly observed on total porosity and macroporosity, percentage of water-stable aggregates, and aggregate size distribution. Lal et al. (1980) observed an increase in aggregate size from 0.25-0.5 mm for plots with no inputs to 4-8 mm for plots with organic inputs at the high rate of 12 Mg ha^{-1}.

While there is widespread agreement that organic inputs improve soil physical conditions, there is less agreement on how organic inputs produce these effects. There are two schools of thought on this issue. One large group believes soil organic matter acts as a cementing agent to bind primary particles into compound units called peds or aggregates. The resistance of these aggregates to the slaking action of water is crucial to the structural integrity of a soil. The literature abounds with the existence of a positive correlation between aggregate stability and organic matter content. Tisdall and Oades (1982) also showed that aggregate stability depends on quality of organic inputs. Aggregation increased with lower quality inputs in poorly structured Alfisols of Australia. This effect may be different in better aggregated soils such as Oxisols and Andosols.

A smaller group of scientists adhere to the notion that soil organic matter contributes to aggregate stability by acting as a water repellent. This group believes that the dispersive power of water is rendered less harmful in water-repellent aggregates. This view is supported by the fact that field soils rarely achieve complete saturation, i.e., even at zero water pressure only 80% of the pore space is water-filled, and heat of wetting of clays decreases when treated with organic materials (Kijne and Taylor, 1964; Kijne, 1968). It is clear that while much is known about the beneficial effects of organic inputs, our understanding of the cause of these effects is poor. This lack of understanding is a barrier to predict and control the management of organic inputs.

Organic inputs render some soils less droughty by increasing water infiltration into the soil and by increasing the soil's water-retention capacity. This increased water retention goes hand in hand with an increased cation retention. As described in Chapter 3 (Oades et al., this publication), adsorption of organic matter by variable-charge clays increases the net negative charge of the clay. The amendment effects or organic inputs are therefore principally active in rendering the soil easier to work, more open, and accessible to oxygen and water and in enlarging the soil's capacity to retain and release water and nutrients to organisms that live in and on it.

Managing physical properties by selection and placement of organic inputs may be more important for some areas of the tropics than management for nutrients. As examples, management for erosion purposes will be particularly important for highly erodible soils such as soils with sandy A horizons. Management of organic inputs that enhance soil properties related to increased water capture and retention will be particularly important for the seasonal and semiarid tropics, whereas elimination of excess water could be important to plant growth in the humid tropics. A fifth research imperative, then, is to investigate the effect of the quality and placement of organic inputs and their interaction on soil physical properties such as microclimate and aggregation. Particular emphasis should be placed on the duration of the effects.

Organic Inputs and Soil Organic Matter

In addition to supplying nutrients and improving soil physical properties, organic inputs can also lead to the formation and maintenance of soil organic matter. In fact, many of the effects of organic inputs already discussed (e.g., nutrient availability patterns and aggregation) are indirect via the formation of soil organic matter. Numerous studies in both temperate and tropical regions have shown that soil organic matter can be maintained by additions of organic residues (Allison, 1973; Larson et al., 1978; Barber, 1979; Lal and Kang, 1982). However, there is little correlation between total soil organic matter content and plant growth or crop productivity (Sanchez and Miller, 1986). Perhaps more important to plant productivity than total soil organic matter is the effect of organic inputs on various soil organic matter fractions.

Recent models suggest dividing soil organic matter into a series of pools of different turnover times (Jenkinson and Rayner, 1977; van Veen and Paul, 1981; Jenkinson et al., 1987; Parton et al., 1987). From the agronomic point of view, the functional pools proposed by Parton et al. (1987) are most attractive among the many models in the literature. The active SOM pool could play a major role in nutrient release and perhaps can be estimated by microbial biomass determinations; the slow SOM pool may play a major role in the stabilization of macroaggregates, while the passive SOM pool may be largely inert as a nutrient release source but may play a major role in the binding of primary soil particles.

Currently there are no methods for separating SOM into the abovementioned pools and, in fact, these pools may not exist as discrete units. The discussion that follows presumes that methods will be developed. In addition, the discussion is highly speculative about the relationships among the suggested SOM pools, soil aggregates, and various chemical fractions in the soil. It is intended to serve as a conceptual framework for exploring the formation, maintenance, and importance of SOM.

A key challenge is to understand the relative role of above- or belowground inputs on the different SOM pools, in different agroecosystems, on soils with contrasting textures, mineralogies, temperature, and moisture regimes. The formation and maintenance of the various pools are thought to be affected by the quantity and quality of organic inputs, management practice, soil texture, and mineralogy. Key questions are how manageable are the soil organic matter pools and how do they relate to plant productivity?

In general, organic inputs high in lignin or polyphenolics, defined as low quality, lead to a more rapid formation of stable forms of soil organic matter (slow and passive pools) than plant materials of high quality (DeHaan, 1976; Martin and Haider, 1980; Stott et al., 1983; Kelley and Stevenson, 1987). High-quality inputs, in turn, are associated with increased active pool and nutrient availability, at least in the short term.

26

Little, however, is known about the long-term differences in the effect of input quality on SOM fractions and nutrient availability. In the case of N, some will go directly to the microbial pool (active pool) and be readily available in the short term via immobilization/mineralization processes. Some of the N that goes through the microbial pool will be associated with decomposition-resistant microbial compounds and become part of the slow or passive pools. Some N will react directly with polyphenolics, lignins, and breakdown products of SOM and be less readily available (slow and passive pools). The relative proportions of each pool formed for given qualities of inputs, however, is unknown. Although much is known about the fate of phenolics, lignins, and breakdown products of SOM, as well as readily decomposable C compounds in short-term laboratory experiments (Martin and Haider, 1980; Azhar et al., 1986; Stevenson, 1986), there are no long-term field data on the fate and availability of the various compounds, their connection to the various SOM pools, and their relevance to productivity.

Placement, tillage practice, and macrofaunal activities can also influence maintenance of SOM and the relative proportions of the various SOM pools through their effects on aggregation. This assumes that SOM associated with micro- and macroaggregates has different turnover times and perhaps corresponds to passive and slow pools, respectively (Tisdall and Oades, 1982; Tiessen et al., 1984c; Elliott, 1986).

Macroaggregate stability is in part controlled by roots and fungi through production of transient and temporary organic binding agents, through physical entanglement of soil particles within fine roots and hyphae, and through compressive forces of growing roots (Martin, 1977; Tisdall and Oades, 1982; Monroe and Kladivko, 1987). Tillage may reduce macroaggregate stability directly, by disrupting aggregates and exposing protected SOM to microbial attack, and indirectly, by altering growth and distribution patterns of roots and fungi. In contrast, it is thought that microaggregation is controlled largely by soil mineralogy and the binding of primary clay particles with persistent organic compounds. Therefore microaggregates may be less influenced by management (Tisdall and Oades, 1982; Tiessen et al., 1984). Elliott, 1986; Ramsay et al. 1986). The limits between these two functionally different aggregate sizes are not yet established for most soils and are likely to vary considerably with texture and mineralogy.

Macroaggregate stability, and presumably the size of the slow pool, should increase in conditions that favor fungal, rather than bacterial, populations. Fungi predominate in the decomposition of low-quality materials (Swift et al., 1981) and of surface-applied organic inputs (as opposed to incorporated organic inputs) (Holland and Coleman, 1987). A relatively larger slow SOM pool might be expected with incorporation than with surface placement of organic inputs because of the larger contact surface between organics and clay particles with incorporation and hence the greater aggregation and physical

protection. Lower total SOM levels, however, are often observed in plowed soils, possibly due to disruption of macroaggregates, to reduced importance of fungi, and to the prevalence of bacteria and other soil organisms with high metabolic activity (Andren and Langerlof, 1983; Ryszkowski, 1985; Hendrix et al., 1986; Holland and Coleman, 1987).

Studies on the effect of placement and quality of inputs on the relative sizes of the various SOM pools are relatively new. Information on the factors controlling aggregation might be used to investigate how organic inputs can be manipulated to manage SOM pools and subseqent plant production.

Recent data from research in the temperate zone suggest that crop productivity is related to the size of the microbial (active) SOM pool (Janzen, 1987). Not only the size but also the turnover rate and composition (bacterial, fungal, and C/N) of the active pool must be considered. It is interesting to speculate whether microbial populations involved in decomposition can be manipulated, through either the type or placement of plant material to produce more decomposition-resisitant (slow pool) or more labile (active pool) soil organic matter in order to synchronize nutrient availability and uptake for the agroecosystem in question. For example, if one were interested in increasing the slow SOM pool, the strategy would aim at increasing the proportion of fungi in the microbial populations since fungi appear to stimulate soil aggregate formation and maintenance and the production of slowly decomposing soil organic matter (Tisdall and Oades, 1982; He et al., 1988a). Much needs to be learned about the potential for manipulating the active and slow pools by the management of organic inputs in terms of matching nutrient availability patterns to plant demands.

Assuming the various SOM pools can be controlled by varying the quality and placement of organic inputs, a simple scenario shows the possible relevance to nutrient availability for agroecosystems differing in nutrient-demand patterns. Short-cycle food crops have high demand for nutrients over a short time. Generally these demands are met by applications of fertilizers. In the humid tropics, however, there are often large losses of these fertilizer nutrients by leaching because the supply of readily available nutrients exceeds plant demand. Application of high-quality organic inputs (e.g., certain legumes) could provide a more efficient use of nutrients by releasing nutrients quickly to short-cycle food crops through rapid turnover or active SOM, but, over a longer time period, releasing nutrients more in synchrony with plant demand than do inorganic fertilizers. Mature tree crops, on the other hand, have lower nutrient demands over similar time periods than do short-cycle crops. Use of inorganic fetilizers or even high-quality organic inputs will probably result in large losses of nutrients. Application of lower quality plant residues may be more appropriate. Through a build-up of soil organic N in the slow pool by additions of low-quality inputs, there would be a lower but more continued release of N, more in synchrony with nutrient-demand patterns of

trees. This scenario is based on inferences from laboratory and field studies and studies of natural ecosystems. It remains to be seen if these concepts can be applied to the management of agroecosystems in the field.

The sixth imperative, therefore, is to develop an understanding of the role of the quality and management of organic inputs on the formation of different SOM pools in tropical agroecosystems, on soils differing in texture, mineralogy, moisture, and temperature regimes.

Conclusions and Recommendations

Management of organic inputs needs to be as quantitative and predictable as management of inorganic inputs in agricultural systems. The diversity of tropical species and farming systems provides ample combinations of crops and organic inputs for designing efficient agroecosystems. Not only must the nutrient contents of the organic inputs be known or reasonably estimated, but also a set of quality parameters needs to be established to predict the rates of release of nutrients during the decomposition of organic inputs and how these patterns change with management and under the influence of various groups of soil organisms. Notably lacking are field methods for measuring root production and decomposition, transfers from organic inputs into SOM fractions, and transfer processes between SOM pools. Related to the difficulty of measurement is the fact that current conceptual models are not homologous with measurable SOM fractions and hence are difficult to test rigorously.

We propose the following imperatives:

Theme Imperative: Management of organic inputs needs to be as quantitative and as predictable as management of inorganic inputs in agroecosystems.

Research Imperatives:

1. Quantify the biomass and nutrient content of aboveground organic inputs in tropical agroecosystems.
2. Develop predictive parameters for nutrient release patterns, or quality, of organic inputs to tropical agroecosystems.
3. Investigate the effect of placement of organic inputs on nutrient availability.
4. Quantify the amounts of nutrients released by roots, identify quality parameters that describe decomposition and nutrient release from roots, and determine the relative importance of roots as sources of nutrients.
5. Investigate the effects of quality and placement of organic inputs on soil physical properties.
6. Develop an understanding of the role of organic inputs on the formation of functional SOM pools in soils differing in texture, mineralogy, and moisture and temperature regimes.

Literature Cited

Abboud, S. A. and Turchenek, L. W. 1986. Solid state ^{13}C NMR spectroscopy of size and density fractions of a chernozemic soil. (Unpublished report)

Adams, W. A. and Kassim, J. K. 1984. Iron oxyhydroxides in soils developed from Lower Paleozoic sedimentary rocks in mid-Wales and implications for some pedogenetic process. Journal of Soil Science 35:117-126.

Ahmed, B. and Islam, A. 1978. Occurrence of inositol hexaphosphate in some humid tropical soils. Tropical Agriculture (Trinidad) 55:149-152.

Ahmed, M. and Oades, J. M. 1984. Distribution of organic matter and adenosine-triphosphate after fractionation of soils by physical procedures. Soil Biology and Biochemistry 16:465-470.

Aiken, G. R. 1988. A critical evaluation of the use of macroporous resins for the isolation of aquatic humic substances. In: F. H. Frimmel and R. F. Christman (eds.), Humic substances and their role in the environment. Wiley, New York. pp. 15-28.

Aiken, G. R., McKnight, D. M., Wershaw, R. L., and MacCarthy, P. (eds.) 1985. Humic substances in soil, sediment, and water. Wiley, New York.

Alegre, J. C. and Cassel, D. K. 1986. Effect of land-clearing methods and post-clearing management on aggregate stability and organic carbon content of a soil in the humid tropics. Soil Science 142:289-295.

Allen, J. C. 1985. Soil responses to forest clearing in the United States and the tropics: geological and biological factors. Biotropica 17:15-27.

Allison, F. E. 1973. Organic matter and its role in crop production. Elsevier, Amsterdam. 637 pp.

Almendros, G. and Gonzalez-Villa, F. J. 1987. Degradative studies on a soil humin fraction—sequential degradation of inherited humin. Soil Biology and Biochemistry 19:513-520.

Almendros, G., Martin, F., and Gonzalez-Villa, F. J. 1988. Effects of fire on humic and lipid fractions in a Dystric Xerochrept in Spain. Geoderma 42:115-127.

Amato, M., Ladd, J. N., Ellington, A., Ford, G., Mahoney, J. E., Taylor, A. C., and Walsgott, D. 1987. Decomposition of plant material in Australian soils. IV. Decomposition *in situ* of ^{14}C and ^{15}N-labelled legume and wheat materials in a range of southern Australian Soils. Australian Journal of Soil Research 25:95-105.

Anderson, D. W. 1979. Processes of humus formation and transformation in soils of the Canadian Great Plains. Journal of Soil Science 30:77-84.

[illegible] and Paul, E. A. 1984. Organo-mineral complexes and their study by radiocarbon dating. Soil Science Society of America Journal 48:298-301.

Anderson, D. W., Saggar, S., Bettany, J. R., and Stewart, J. W. B. 1981. Particle size fractions and their use in studies of soil organic matter. I. The nature and distribution of forms of carbon, nitrogen, and sulfur. Soil Science Society of America Journal 45:767-772.

Anderson, G. 1980. Assessing organic phosphorus in soils. In: F. E. Khasawneh, E. C. Sample, and E. J. Kampreth (eds.), The role of phosphorus in agriculture. American Society of Agronomy, Madison, Wisconsin.

Anderson, G. and Arlidge, E. Z. 1962. The adsorption of inositol phosphates and glycerophosphate by soil clays, clay minerals, and hydrated sesquioxides in acid media. Journal of Soil Science 13:216-224.

Anderson, G., Williams, E. G., and Moir, J. O. 1974. A comparison of the sorption of inorganic orthophosphate and inositol hexaphosphate by six acid soils. Journal of Soil Science 25:51-62.

Anderson, J. M. 1988a. Fauna mediated transport processes in soils. Agriculture, ecosystems and environment 24: 5-19.

———. 1988b. Spatiotemporal effects of invertebrates on soil processes. Biology and Fertility of Soils 6:216-227.

Anderson, J. M. and Ingram, J. S. I. (eds.) 1989. Tropical soil biology and fertility handbook of methods. Commonwealth Agricultural Bureau International, Wallingford, England.

Anderson, J. M. and Swift, M. J. 1983. Decomposition in tropical forests. In: S. L. Sutton, T. C. Whitmore, and A. C. Chadwick (eds.), Tropical rainforests: ecology and management. Special Publication 2, British Ecological Society. Blackwell Scientific, Oxford, England. pp. 287-309.

Anderson, J. M. and Wood, T. G. 1984. Mound composition and soil modification by two soil-feeding termites (Termitinae, Termitidae). Pedobiologia 26:77-82.

Anderson, J. M., Proctor, J., and Vallack, H. W. 1983. Ecological studies in four contrasting lowland rainforests in Gunung Mulu National Park, Sarawak. III. Decomposition processes and nutrient losses from leaf litter. Journal of Ecology 71:503-527.

Anderson, J. P. E. and Domsch, K. H. 1980. Quantities of plant nutrients in the microbial biomass of selected soils. Soil Science 130:211-216.

Andren, O. and Lagerlöf, J. 1983. Soil fauna (microarthropods, enchytraeids, nematodes) in Swedish agricultural cropping systems. Acta Agric. Scand. 33:33-52.

Arshad, M. A., Ripmeester, J. A., and Schnitzer, M. 1988. Attempts to improve solid state ^{13}C NMR spectra of whole soils. Canadian Journal of Soil Science 68:593-602.

Atlas of Hawaii, 2nd ed. 1983. Department of Geography, University of Hawaii. University of Hawaii Press, Honolulu.

Audreux, F., Faivre, P., and Bonne, M. 1987. Nature et dynamique des matières organiques dans les processes de podzolisation. In: D. Righi and A. Chauvel (eds.), Podzols et podzolisation. Institut National de la Recherche Agronomique, Paris. pp. 119-130.

Audreux, F., Faivre, P., and Ruiz, E. 1985. Influence du gradient climatique sur la differenciation des sols d'une séquence altitudinale dans les Andes de Colombie. Distribution des matières humiques et rôle du fer dans l'humification. Comptes Rendus de l'Académie des Sciences, Paris, Série II. 300:223-226.

Avnimelech, Y. 1986. Organic residues in agriculture. In: Y. Chen and Y. Avnimelech (eds.), The role of organic matter in modern agriculture. Martinus Nijhoff, Dordrecht, The Netherlands. pp. 1-10.

Ayanaba, A., Tuckwell, S. B., and Jenkinson, D. S. 1976. The effects of clearing and cropping on the organic reserves and biomass of tropical forest soils. Soil Biology and Biochemistry 8:519-525.

Azhar, El Sayed, Verhe, R., Proot, M., Sandra, P., and Verstraete, W. 1986. Binding of nitrite-N on polyphenols during nitrification. Plant and Soil 94:369-382.

Balesdent, J., Mariotti, A., and Guillet, B. 1987. Natural carbon-13 abundance as a tracer for studies of soil organic matter dynamics. Soil Biology and Biochemistry 19:25-30.

Balesdent, J., Wagner, G. H., and Mariotti, A. 1988. Soil organic matter turnover in long-term field experiments as revealed by carbon-13 natural abundance. Soil Science Society of America Journal 52:118-124.

Barber, D. A. and Martin, J. K. 1976. The release of organic substances by cereal roots into soil. New Phytologist 76:69-80.

Barber, S. A. 1984. Soil nutrient bioavailability. Wiley, New York.

———. 1979. Corn residue management and soil organic matter. Agronomy Journal 71:625-627.

Barois, I. and Lavelle, P. 1986. Changes in respiration rate and some physicochemical properties of a tropical soil during transit through *Pontoscolex corethrurus* (Glossoscolecidae, Oligochaeta). Soil Biology and Biochemistry 18:539-541.

Barois, I., Cadet, P., Albrecht, A., and Lavelle, P. 1988. Systemes de culture et faune des sols. In: C. Feller (ed.), Fertilite des sols dans les agricultures paysannes caribeennes. Effet des restitutions organiques. Projet CEE/ORSTOM no. TSDA-0178F. pp. 85-94.

Barron, P. F., Wilson, M.A., Stephens, J. F., Cornell, B. A., and Tate, K. R. 1980. Cross polarisation ^{13}C n.m.r. spectroscopy of whole soil. Nature. (London) 286:585.

Barrow, N. J. 1961. Phosphorus in soil organic matter. Soils and Fertilizer 24:169-173.

Beauchamp, E. G., Reynolds, W. D., Brasche-Villeneuve, D., and Kirby, K. 1986. Nitrogen mineralization kinetics with different soil pretreatments and cropping histories. Soil Science Society of America Journal 50:1478-1483.

Benner, R., Fogel, M. L., Sprague, E. K., and Hodson, R. E. 1987. Depletion of carbon-13 in lignin and its implications for stable carbon isotope studies. Nature 329:708-710.

Benoit, R. E. and Starkey, R. L. 1968. Inhibition of decomposition of cellulose and some other carbohydrates by tannin. Soil Science 105:291-296.

Berendse, F., Berg, B., and Bossata, E. 1987. The effect of lignin and nitrogen on the decomposition of litter in nutrient-poor ecosystems: a theoretical approach. Canadian Journal of Botany 65:1116-1120.

Berg, B., Muller, M. and Wessen, B. 1987. Decomposition of red clover (*Trifolium pratense*) roots. Soil Biology and Biochemistry 19:589-593.

Berish, C. W. 1982. Root biomass and surface area in three successional tropical forests. Canadian Journal of Forestry Research 12:699-704.

Berish, C. W. and Ewel, J. J. 1988. Root development in simple and complex tropical successional ecosystems. Plant and Soil 106:73-84.

Bertrand, A. R. 1983. The key to the agricultural ecosystem. In: R. R. Lowrance, R. L. Todd, L. E. Asmussen, and R. A. Leonard (eds.), Nutrient cycling in agricultural ecosystems. Special Publication 23. University of Georgia Agricultural Experiment Station, Athens. pp. 3-12.

Bhatti, H. M., Yasin, M., and Rashad, M. 1985. Evaluation of Sesbania green manuring in rice-wheat rotation. In: Proceedings of the International Symposium on Nitrogen and the Environment. NIAB, Faisalabad, Pakistan. pp. 275-284.

Biederbeck, V. O. 1978. Soil organic matter and soil fertility. In: M. Schnitzer and S. U. Khan (eds.), Soil organic matter. Elsevier, New York. pp. 273-310.

Bignell, D. E., Oskarsson, H., Anderson, J. M., Ineson, P., and Wood, T. G. 1983. Structure, microbial associations and function of the so-called "mixed segment" of the gut in two soil-feeding termites, *Procubitermes aburiensis* and *Cubitermes*

severus (Termitinae, termitidae). Journal of the Zoological Society of London 201:445-480.

Billes, G. and Bottner, P. 1981. Effet des racines vivantes sur la décomposition d'une litiere racinaire marquée au ^{14}C. Plant and Soil 62:193-208.

Birch, H. F. 1958. The effect of soil drying on humus decomposition and nitrogen availability. Plant and Soil 10:9-31.

Bonde, T. A. and Lindberg, T. 1988. Nitrogen mineralization kinetics in soil during long-term aerobic laboratory incubations: a case study. Journal of Environmental Quality 17:414-417.

Boone, R. D., Sollins, P., and Cromack, K., Jr. 1988. Stand and soil changes along a mountain hemlock death and regrowth sequence. Ecology 69:714-722.

Bornemisza, E. and Igue, K. 1967. Comparisons of three methods for determining organic phosphorus in Costa Rican soils. Soil Science 103:347-353.

Bouché, M. B. 1977. Strategies lombriciennes. In: U. Lohm and T. Persson (eds.), Soil organisms as components of ecosystems. Ecological Bulletins (Stockholm) 33:122-132.

Bouldin, D. R. 1988. The effect of green manure on soil organic matter content and N availability to crops. IRRI, Los Banos, The Philippines. In Press.

Bowen, G. D. 1984. Tree roots and the use of soil nutrients. In: G. D. Bowen and E. K. S. Nambiar (eds.), Nutrition of plantation forests. Academic Press, London. pp. 147-479.

Bowen, G. D. and Nambiar, E. K. S. (eds.) 1984. Nutrition of plantation forests. Academic Press, New York. 516 pp.

Bracewell, J. M. and Robertson, G. W. 1984. Characteristics of soil organic matter in temperate soils by Curie-point pyrolysis-mass spectrometry. I. Organic matter variations with drainage and mull humification in A horizons. Journal of Soil Science 35:549-558.

Bracewell, J. M. and Robertson, G. W. 1987a. Characteristics of soil organic matter in temperate soils by Curie-point pyrolysis-mass spectrometry. II. The effect of drainage and illuviation in B horizons. Journal of Soil Science 38:181-198.

Bracewell, J. M. and Robertson, G. W. 1987b. Characteristics of soil organic matter in temperate soils by Curie-point pyrolysis-mass spectrometry. III. Transformations occurring in surface organic horizons. Geoderma 40:333-344.

Bracewell, J. M. and Robertson, G. W. 1987c. Indications from analytical pyrolysis on the evolution of organic materials in the temperate environment. Journal of Analytical and Applied Pyrolysis 11:355-366.

Bracewell, J. M., Robertson, G. W., and Tate, K. R. 1976. Pyrolysis-gas chromatography studies on a climosequence of soils in tussock grasslands, New Zealand. Geoderma 15:209-215.

Bracewell, J. M., Robertson, G. W., and Welch, D. I. 1980a. Polycarboxylic acids as the origin of some pyrolysis products characteristic of soil organic matter. Journal of Analytical and Applied Pyrolysis 2:239-248.

Bracewell, J. M., Robertson, G. W., and Williams, B. L. 1980b. Pyrolysis-mass spectrometry studies of humification in a peat and a peaty podzol. Journal of Analytical and Applied Pyrolysis 2:53-62.

Brookes, P. C., Powlson, D. S., and Jenkinson, D. S. 1982. Measurement of microbial biomass phosphorus in soil. Soil Biology and Biochemistry 14:319-329.

Brookes, P. C., Landman, A., Pruden, G., and Jenkinson, D. S. 1985. Chloroform fumigation and the release of soil nitrogen: a rapid direct extraction method to measure microbial biomass nitrogen in soil. Soil Biology and Biochemistry 17:835-842.

Brown, S. and Lugo, A. E. 1982. The storage and production of organic matter in tropical forests and their role in the global carbon cycle. Biotropica 14:161-187.

Buschbacher, Uhl, C. and Searrao, E. A. S. 1988. Abandoned pastures in eastern Amazonia. II. Nutrient stocks in the soil and vegetation. Journal of Ecology 76:682-699.

Buxton, R. D. 1981. Changes in the composition and activities of termite communities in relation to changing rainfall. Oecologia (Berlin) 51:371-378.

Cabala-Rosand, P. (ed.) 1985. Reciclagen de nutrientes e agricultura de baixos insumos nos trópicos. Centro de Pesquisas do Cacau, Ilheus, Bahía, Brazil. 341 pp.

Cabrera, M. L. and Kissel, D. E. 1988a. Potentially mineralizable nitrogen in disturbed and undisturbed soil samples. Soil Science Society of America Journal 52:1010-1015.

Cabrera, M. L. and Kissel, D. E. 1988b. Evaluation of a method to predict nitrogen mineralized from soil organic matter under field conditions. Soil Science Society of America Journal 52:1027-1031.

Caldwell, M. M. 1979. Root structure: the considerable cost of below-ground function. In: O. T. Solbrig, S. Jain, G. B. Johnson, and P. H. Raven (eds.), Topics in plant population biology. Columbia University Press, New York. pp. 408-430.

Cameron, R. S. and Posner, A. M. 1979. Mineralizable organic nitrogen in soil fractionated according to particle size. Journal of Soil Science 30:565-577.

Campbell, C. A. 1978. Soil organic carbon, nitrogen and fertility. In: M. Schnitzer and S. U. Khan (eds.), Soil organic matter. Elsevier, New York. pp. 173-271.

Campbell, C. A., Paul, E. A., Rennie, D. A., and McCallum, K. J. 1967. Applicability of the carbon-dating method of analysis to soil humus studies. Soil Science 104:217-224.

La Caro, F. and Rudd, R. L. 1985. Leaf litter disappearence rates in Puerto Rican montane rain forest. Biotropica 17:269-276.

Carter, M. R. and Rennie, D. A. 1987. Effects of tillage on deposition and utilization of ^{15}N residual fertilizer. Soil Tillage Research 9:33-43.

Catroux, G. and Schnitzer, M. 1987. Chemical, spectroscopic, and biological characteristics of the organic matter in particle size fractions separated from an Aquoll. Soil Science Society of America Journal 15:1200-1207.

Cavallaro, N. and McBride, M. B. 1984. Effect of selective dissolution on charge and surface properties of an acid soil clay. Clays and Clay Minerals 32:283-290.

CEPLAC. 1985. Informe de pesquisas de 1983. Comissáo Executiva do Plano de Laxoura Cacaueria, Ilheus, Bahía, Brazil.

Cerri C. C., Feller, C., Balesdent, J., Victoria, R., and Plenecassagne, A. 1985. Application du traçage isotopique naturel en ^{13}C, a l'étude de la dynamique de la matière organique dan les sols. Comptes Rendus de l'Académie des Sciences, Paris, Série II. 300:423-428.

Chapin, F. S. III. 1980. The mineral nutrition of wild plants. Annual Review of Ecology and Systematics 11:233-260.

Chapin, F. S. and Kedrowski, R. A. 1983. Seasonal changes in nitrogen and phosphorus fractions and autumn retranslocation in evergreen and deciduous taiga trees. Ecology 64:376-391.

Charley, J. L. and Richards, B. N. 1983. Nutrient allocation in plant communities: mineral cycling in terrestrial ecosystems. In: O. L. Lange, P. S. Nobel, C. B. Osmond, and H. Ziegler (eds.), Physiological plant ecology. IV. Ecosystem processes. Springer Verlag, Berlin. pp. 5-45.

Chatterjee, B. N., Singh, K. I., Pal, A., and Maiti, S. 1979. Organic manures as substitutes for chemical fertilizers for high yielding rice varieties. Indian Journal of Agricultural Sciences 49:188-192.

Cheshire, M. V., Mundie, C. M., and Shepherd, H. 1974. Transformation of sugars when rye hemicellulose labelled with ^{14}C decomposes in soil. Journal of Soil Science 25:90-95.

Cheshire, M. V., Sparling, G. P., and Mundie, C. M. 1985. The effect of oxidation by periodate on soil carbohydrate derived from plants and microorganisms. Journal of Soil Science 36:351-356.

Cheshire, M. V., Sparling, G. P., and Mundie, C. M. 1984. Influence of soil type, crop and air drying on residual carbohydrate content and aggregate stability after treatment with periodate and tetraborate. Plant and Soil 76:339-347.

Cheshire, M. V., Sparling, G. P. and Mundie, C. M. 1983. Effect of periodate treatment of soil and carbohydrate constituents and soil aggregation. Journal of Soil Science 34:105-112.

Chichester, F. W. 1969. Nitrogen in soil organic-mineral sedimentation fractions. Soil Science 107:356-363.

Christensen, B. T. 1987. Decomposability of organic matter in particle size fractions from field soils with straw incorporation. Soil Biology and Biochemistry 19:429-435.

Christensen, B. T.. 1986. Straw incorporation and soil organic matter in macro-aggregates and particle size separates. Journal of Soil Science 37:125-135.

Christensen, B. T. and Sørensen, L. H. 1986. Nitrogen in particle size fractions of soils incubated for five years with ^{15}N-ammonium and ^{14}C-hemicellulose. Journal of Soil Science 37:241-247.

Christensen, B. T. 1985. Carbon and nitrogen in particle size fraction isolated from Danish arable soils by ultrasonic dispersion and gravity-sedimentation. Acta Agric. Scand. 35:175-187.

Christensen, B. T. and Sørensen, L. H. 1985. The distribution of native and labelled carbon between soil particle size fractions isolated from long-term incubation experiments. Journal of Soil Science 36:219-229.

Churchman, G. J. and Tate, K. R. 1986. Aggregation of clay in six New Zealand soil types as measured by disaggregation procedures. Geoderma 37:207-220.

CIAT. 1985. Tropical pastures program, annual report for 1984. Centro Internacional de Agricultura Tropical, Cali, Colombia. 137 pp.

Cline, G. R., Powell, P. E., Szaniszlo, P. J., and Reid, C. P. P. 1983. Comparison of the abilities of hydroxamic and other natural organic acids to chelate iron and other ions in soil. Soil Science 136:145-157.

Cole, C. V., Stewart, J. W. B., Ojima, D., Parton, W. J., and Schimel, D. 1989. Modeling land use effects on soil organic matter dynamics in the North American Great Plains. Plant and Soil. In press.

Coley, P. D. 1983. Herbivory and defensive characteristics of tree species in a lowland tropical forest. Ecological Monographs 53:209-233.

Collins, N. M. 1983. The utilization of nitrogen resources by termites (Isoptera). In: J. A. Lee, S. McNeill, and I. H. Rorison (eds.), Nitrogen as an ecological factor. Blackwell Scientific, Oxford, England. pp. 381-412.

Collins, N. M., Anderson, J. M., and Vallack, H. W. 1984. Studies on the soil invertebrates of lowland and montane rainforests in the Gunung Mulu National Park. Sarawak Museum Journal 30: 19-33.

Cooke, G. W. 1977. The roles of organic manures and organic matter in managing soils for higher crop yields—a review of the experimental evidence. Proceedings of the International Seminar on Soil Environment and Fertility Management in Intensive Agriculture, Tokyo, Japan.

Cotching, W. E., Allbrook, R. F., and Gibbs, H. S. 1979. Influence of maize cropping on the soil structure of two soils in the Waikato district, New Zealand. New Zealand Journal of Agricultural Research 22:431-438.

Couto, W., Lathwell, D. J., and Bouldin, D. R. 1979. Sulfate sorption by two Oxisols and an Alfisol of the tropics. Soil Science 127:108-116.

Crampton, C. B. 1982. Podsolization of soils under individual tree canopies in southwestern British Columbia. Geoderma 28:57-61.

Crossley, D. A. Jr., House, G. J., Snider, R. M., Snider, R. J., and Stinner, B. R. 1984. The positive interactions in agroecosystems. In: R. R. Lowrance, B. R. Stinner, and G. J. House (eds.), Agricultural ecosystems, unifying concepts. Wiley, New York. 233 pp.

Cuevas, E. 1983. Crecimiento de raices finas y su relación con los procesos de descomposición de materia orgánica y liberación de nutrientes en bosques del Alto Rio Negro en el Territorio Federal Amazonas. Ph.D. dissertation. Instituto Venezolano de Investigaciones Científicas, Caracas, Venezuela.

Cuevas, E. and Medina, E. 1988. Nutrient dynamics within Amazonian forests. II. Fine root growth, nutrient availability and leaf litter decomposition. Oecologia (Berlin) 76:222-235.

Cuevas, E. and Medina, E. 1986. Nutrient dynamics within Amazonian forest ecosystems. I. Nutrient flux in fine litter fall and efficiency of nutrient utilization. Oecologia (Berlin) 68:466-472.

Cuevas, E. and Medina, E. 1983. Root production and organic matter decomposition in a Tierra Firme forest of the Upper Rio Negro basin. In: L. Kutschere (ed.), Wurzelökologie and ihre Nutzanwendung (Root ecology and its practical applications). International Symposium on Root Ecology and Its Applications, Gumpenstein, Austria, 1982. pp. 653-666.

Dalal, R. C. and Mayer, R. J. 1986a. Long-term trends in fertility of soils under continuous cultivation and cereal cropping in southern Queensland. III. Distribution and kinetics of soil organic carbon in particle-size fractions. Australian Journal of Soil Research 24: 293-300.

Dalal, R. C. and Mayer, R. J. 1986b. Long-term trend in fertility of soils under continuous cultivaton and cereal cropping in southern Queensland. IV. Loss of

organic carbon from different density fractions. [illegible]
Research 24: 301-309.

Darici, C., Herrera, V., and Schaefer, R. 1988. L'effet de divers tanins sur l'activite microbienne des sols tropicaux a allophane (Andisols) et a montmorillonite (Vertisols). Proceedings 113e Congrès Nationale de Sociétiés Savantes. In Press.

Dash, M. C., Behera, N., Satpathy, B., and Pati, D. P. 1985. Comparison of two methods for microbial biomass estimatiou in some tropical soils. Revue d'-Ecologie et de Biologie du Sol 22:13-20.

Davidson, E. A., Galloway, L. F., and Strand, M. K. 1987. Assessing available carbon: comparison of techniques across selected forest soils. Communications in Soil Science and Plant Analysis 18:45-64.

Deans, J. R., Molina, J. A. E., and Clapp, C. E. 1986. Models for predicting potentially mineralizable N and decomposition rate constants. Soil Science Society of America Journal 50:323-327.

DeDatta, S. K. 1981. Principles and practices of rice production. Wiley, New York. 618 pp.

DeHaan, S. 1976. Humus, its formation, its relation with the mineral part of the soil and its significance for soil productivity. In: Soil organic matter studies, vol. I. International Atomic Energy Agency, Vienna. pp. 21-30.

Dietz, S. and Bottner, P. 1981. Etude par autoradiographie de l'enfouissement d'une litière marquée au ^{14}C en milieu herbacé. In: Migrations organo-minérales dans les sols tempérés, Nancy, 1979. Centre National de la Recherche Scientifique, Paris. pp. 125-132.

Doran, J. W. 1987a. Microbial biomass and mineralizable nitrogen distributions in no-tillage and plowed soils. Biology and Fertility of Soils 5:68-75.

———. 1987b. Tillage effects on microbiological release of soil organic nitrogen. In: T. J. Gerik and B. L. Harris (eds.), Conservation tillage. Southern Region No-till Conference, July 1987. Texas A & M University, College Station. pp. 63-66.

Doran, J. W. and Smith, M. S. 1987. Organic matter management and utilization of soil and fertilizer nutrients. Chapter 4, in: R. F. Follett, J. W. B. Stewart, and C. V. Cole (eds.), Soil fertility and organic matter as critical components of production systems. Special Publication 19. Soil Science Society of America, Madison, Wisconsin. pp. 53-72.

Dormaar, J. F. 1984. Monosaccharides in hydrolysates of water-stable aggregates after 67 years of cropping to spring wheat as determined by capillary gas chromatography. Canadian Journal of Soil Science 64:647-656.

Dormaar, J. F. 1983. Chemical properties of soil and water-stable aggregates after sixty-seven years of cropping to spring wheat. Plant and Soil 75:51-61.

Douglas, J. T. and Goss, M. J. 1982. Stability and organic matter content of surface soil aggregates under different methods of cultivation and in grassland. Soil Tillage Research 2:155-175.

Duchaufour, P. 1977. Pedology: pedogenesis and classification. Allen and Unwin, London.

Dudal, R. 1976. Inventory of the major soils of the world with special reference to mineral stress hazards. In: M. J. Wright (ed.), Plant adaptation to mineral stress in problem soils. Cornell University Agricultural Experiment Station, Ithaca, New York.

Edwards, A. P. and Bremner, J. M. 1967. Microaggregates in soils. Journal of Soil Science 18:64-73.

Edwards and Grubb. 1982. Studies of mineral cycling in a montane rain forest in New Guinea. IV. Soil characteristics and the division of mineral elements between the vegetation and soil. Journal of Ecology 70:649-666.

Elkhatib, E. A., Bennett, O. L., Baligar, and Wright, R. J. 1986. A centrifuge method for obtaining soil solution using an immiscible liquid. Soil Science Society of America Journal 50:297-299.

Elkins, N. Z, Sabol, G. V., Ward, T. J., and Whitford, W. G. 1986. The influence of subterranean termites on the hydrological characteristics of a Chihuahuan desert ecosystem. Oecologia (Berlin) 68:521-528.

Elliott, E. T. 1986. Aggregate structure and carbon, nitrogen, and phosphorus in native and cultivated soils. Soil Science Society of America Journal 50:627-633.

Elliott, E. T. and Coleman, D. C. 1988. Let the soil work for us. Ecological Bulletins (Copenhagen) 39:23-32.

Enwezor, W. O. and Moore, A. W. 1966. Phosphorus status of some Nigerian soils. Soil Science 102:322-328.

EPA. 1988. Stabilization report. Workshop on agriculture and climate change. U.S. Environmental Protection Agency, Washington, D.C. 45 pp.

Evans, L. J. and Wilson, W. G. 1985. Extractable Fe, Al, Si and C in B horizons of podzolic and brunisolic soils from Ontario. Canadian Journal of Soil Science 65:489-496.

FAO. 1985. Yearbook of agriculture for 1984. FAO, Rome.

———. 1978. Organic recycling in Asia. Soils Bulletin 36. FAO, Rome. 417 pp.

———. 1975. Organic materials as fertilizers. Soils Bulletin 27. FAO, Rome. 394 pp.

FAO-UNESCO. 1974. Soil map of the world, 1:5,000,000. Vol. 1. Legend. UNESCO, Paris.

van Fassen, H. G. and Smilde, K. W. 1985. Organic matter and turnover in soils. In: B. T. Kang and J. van der Heide (eds.), Nitrogen management in farming systems in humid and subhumid tropics. Institute for Soil Fertility, Haren, The Netherlands. pp. 39-55.

Flaig, W. 1975. Chemical composition and physical properties of humic substances. In: J. E. Gieseking (ed.), Soil components, vol 1. Springer-Verlag, New York.

Fogel, R. 1980. Mycorrhizae and nutrient cycling in natural forest ecosystems. New Phytologist 86:199-212.

Ford, G. W., Greenland, D. J., and Oades, J. M. 1969. Separation of the light fraction from soils by ultrasonic dispersion in halogenated hydrocarbons containing a surfactant. Journal of Soil Science 20:291-296.

Fox, R. H. 1980. Soils with variable charge: agronomic and fertility aspects. In: B. K. G. Theng (ed.), Soils with variable charge. New Zealand Society of Soil Science, Lower Hutt. pp. 195-224.

Fox, R. H. and Bandel, V. A. 1986. Nitrogen utilization with no-tillage. In: M. A. Sprague and G. B. Triplett (eds.), No-tillage and surface-tillage agriculture: the tillage revolution. Wiley, New York. pp. 117-148.

Fox, R. H. and Searle, P. G. E. 1978. Phosphate adsorption by soils of the tropics. In: M. Drosdoff (ed.), Diversity of soils in the tropics. Special Publication 34. American Society of Agronomy, Madison, Wisconsin. pp. 97-119.

Fragoso, C. and Lavelle, P. 1987. The earthworm community of a Mexican tropical rainforest (Chajul, Chiapas). In: A. M. Bonvieini and P. Omodeo (eds.), On earthworms. Selected Symposia and Monographs U.Z.I. 2, Mucchi, Model A. pp. 281-295.

Freney, J. R. 1986. Forms and reactions of organic sulfur compounds in soils. In: M. A. Tabatabai (ed.), Sulfur in agriculture. American Society of Agronomy, Madison, Wisconsin. pp. 207-232.

Frissel, M. J. (ed.) 1978. Cycling of mineral nutrients in agricultural ecosystems. Elsevier, Amsterdam. 356 pp.

Gartlan, J. S., Newberry, D. McC., Thomas, D. W., and Waterman, P. G. 1986. The influence of topography and soil phosphorus on the vegetation of Korup Forest Reserve, Cameroun. Vegetation 65:131-148.

Gillman, G. P. 1974. The influence of net charge on water dispersible clay and sorbed sulphate. Australian Journal of Soil Research 12:173-176.

Goedert, W. J. (ed.) 1986. Solos dos Cerrados: technologías e estrategias de manejo. Nobel, São Paulo. 422 pp.

Goh, K. M., Rafter, T. A., Stout, J. D., and Walker, T. W. 1976. The accumulation of soil organic matter and its carbon isotope content in a chronosequence of

soils developed on aeolian sand in New Zealand. Journal of Soil Science 27:89-100.

Gonzalez, M. A. and Sauerbeck, D. R. 1982. Decomposition of ^{14}C labelled plant residues in different soils and climates of Costa Rica. Proceedings of the Regional Colloquium on Soil Organic Matter Studies. Piracicaba, SP-Brazil. PROMOCET. São Paulo. pp. 141-146. Available through Centro de Energia Nuclear na Agricultura, Av. Centenario, Caixa Postal 96, 13400 Piracicaba, S.P., Brazil.

Gould, E., Andau, M., and Easton, E. G. 1987. Observations of earthworms in Sepilok Forest, Sabah, Malaysia. Biotropica 19:370-372.

Gower, S. T. 1987. Relations between mineral nutrient availability and fine root biomass in two Costa Rican wet forests: a hypothesis. Biotropica 19:171-175.

Greenland, D. J. and Nye, P. H. 1959. Increases in carbon and nitrogen contents of tropical soils under natural fallows. Journal of Soil Science 10:284-299.

Griffith, E. and Burns, R. G. 1972. Interaction between phenolic substances and microbial polysaccharides in soil aggregation. Plant and Soil 36:599-612.

Grove, T. L. 1985. Phosphorus cycles in forests, grasslands, and agricultural ecosystems. Ph.D. thesis. Cornell University, Ithaca, New York.

Guar, A. C. 1984. Response of rice to organic matter: the Indian experience. In: Organic matter and rice. IRRI, Los Banos, The Philippines. pp. 503-514.

Gupta, S. R., Rajvanshi, R., and Singh, J. S. 1981. The role of the termite *Odontotermes gurdaspurensis* (Isoptera, Termitidae) in plant litter decomposition in a tropical grassland. Pedobiologia 22:254-261.

Haider, K. and Martin, J. P. 1981. Biochemistry of humus formation and its interaction with clays. In: Migrations organo-minérales dans les sols tempérés, Nancy, 1979. Centre National de la Recherche Scientifique, Paris. pp. 163-172.

Haines, B. L. 1978. Element and energy flows through colonies of the leaf-cutting ant, Atta colombica, in Panama. Biotropica 10:270-277.

Hairiah, K. and van Noordwijk, M. 1986. Root studies on a tropical Ultisol in relation to nitrogen management. Report 7-86. Institute for Soil Fertility, Haren, The Netherlands. 116 pp.

Halma, G., Posthumus, M. A., Miedman, R., van de Westeringh, R., and Meuzelaar, H. L. C. 1978. Characterisation of soil types by pyrolysis-mass spectrometry. Agrochimica 22:372-382.

Halstead, R. L. and McKercher, R. B. 1975. Biochemistry and cycling of phosphorus. In: E. A. Paul and A. D. McLaren (eds.), Soil Biochemistry, vol. 4. Dekker, New York.

Hamblin, A. P. and Greenland, D. J. 1977. Effects of organic constituents and complexed metal ions on aggregate stability of some East Anglian soils. Journal of Soil Science 28:410-416.

Handley, W. R. C. 1954. Mull and mor formation in relation to forest soils. Bulletin 23. Forestry Commission, H.M.S.O., Oxford, England. 115 pp.

Harmsen, G. W. 1951. Die Bedeutung der Bodenoberflache fur die Humusbildung. Plant and Soil 3:110. (as cited by Stevenson, 1986)

Hatcher, P. G. and Spiker, E. C. 1988. Selective degradation of plant biomolecules. In: F. H. Frimmel and R. F. Christman (eds.), Humic substances and their role in the environment. Dahlem Workshop Report. Wiley, New York. pp. 59-74.

Hatcher, P. G., Vanderhart, D. L., and Earl, W. L. 1980. Use of solid-state ^{13}C NMR in structural studies of humic acids and humin from Holocene sediments. Organic Geochemistry 2:87-92.

Hatcher, P. G., Breger, I. A., Maciel, G. E., and Szeverenyi, N. M. 1985. Geochemistry of humin. In: G. R. Aiken, D. M. McKnight, R. L. Wershaw, and P. MacCarthy (eds.), Humic substances in soil, sediment, and water. Wiley, New York. pp. 275-302.

Hatcher, P. G., Schnitzer, M., Dennis, L. W., and Maciel, G. E. 1981. Aromaticity of humic substances in soil. Soil Science Society of America Journal 45:1089-1094.

Hawkes, G. E., Powlson, D. S., Randall, E. W., and Tate, K. R. 1984. A ^{31}P nuclear magnetic resonance study of the phosphorus species in alkali extracts from long-term field experiments. Journal of Soil Science 35:35-45.

Hawkins, P. and Brunt, M. 1965. Report to the government of Cameroon on the soils and ecology of West Cameroon. Report 2083. FAO, Rome.

Hayes, M. H. B. 1985. Extraction of humic substances from soil. In: G. R. Aiken, D. M. McKnight, R. L. Wershaw, and P. MacCarthy (eds.), Humic substances in soil, sediment, and water. Wiley, New York. pp. 329-362.

Hayes, M. H. B. and Swift, R. S. 1978. The chemistry of soil organic colloids. In: D. J. Greenland and M. H. B. Hayes (eds.), The chemistry of soil constituents. Wiley, Chichester, England. pp. 179-320.

Hayes, M. J. and Cooley, J. H. 1987. Tropical Soil Biology: current status of concepts. Intecol Bulletin 14. University of Georgia, Athens, Georgia. 59 p.

He, X.-T., Stevenson, F. J., Mulvaney, R. L., and Kelley, K. R. 1988a. Incorporation of newly immobilized ^{15}N into stable organic forms in soil. Soil Biology and Biochemistry 20:74-81.

He, X.-T., Stevenson, F. J., Mulvaney, R. L., and Kelley, K. R. 1988b. Extraction of newly immobilized ^{15}N from an Illinois Mollisol using aqueous phenol. Soil Biology and Biochemistry 20:857-862.

Hedley, M. J. and Stewart, J. W. B. 1982. Method to measure microbial biomass phosphorus in soils. Soil Biology and Biochemistry 14:337-385.

Hedley, M. J., Stewart, J. W. B., and Chauhan, B. S. 1982. Changes in inorganic and organic soil phosphorus fractions induced by cultivation practices and by laboratory incubations. Soil Science Society of America Journal 46:970-976.

Helal, H. M. and Sauerbeck, D. R. 1986. Effect of plant roots on carbon metabolism of soil microbial biomass. Zeitschrift für Pflanzenernahrung und Bodenkunde 149:181-188.

Helling, C. S., Chesters, G., and Corey, R. B. 1964. Contribution of organic matter and clay to soil cation exchange capacity as affected by pH of the saturating solution. Soil Science Society of America Proceedings 28:517-520.

Hempfling, R., Ziegler, F., Zech, W., and Schulten, H. R. 1987. Litter decomposition and humification in acidic forest soils studied by chemical degradation, IR and NMR spectroscopy and pyrolysis field ionization mass spectrometry. Zeitschrift für Pflanzenernahrung und Bodenkunde 150:179-186.

Henderson, J. B. and Kamprath, E. J. 1970. Nutrient and dry matter accumulation by soybeans. Technical Bulletin 197. North Carolina Agricultural Experiment Station, Raleigh. 27 pp.

Hendrix, P. F., Parmelee, R. W., Crossley, D. A., Jr., Coleman, D. C., Odum, E. P., and Groffman, P. M. 1986. Detritus food webs in conventional and no-tillage agroecosystems. Bioscience 36:374-380.

Herbillon, A. J. 1980. Mineralogy of Oxisols and oxic materials. In: B. K. G. Theng (ed.), Soils with variable charge. New Zealand Society of Soil Science, Lower Hutt. pp. 109-126.

Higashi, T. 1983. Characterization of Al/Fe-humus complexes in Dystrandepts through comparison with synthetic forms. Geoderma 31:277-288.

Hinds, A. A. and Lowe, L. F. 1980. Distribution of carbon, nitrogen, sulfur, and phosphorus in particle size-separates from gleysolic soils. Canadian Journal of Soil Science 60:783-786.

Hoffman, G. and de Leenheer, L. 1975. Influence of soil pre-wetting on aggregate instability. Pedologie 25:190-198.

Holdridge, L. R. 1967. Life zone ecology. Tropical Science Center, San José, Costa Rica. 206 pp.

Holland, E. A. and Coleman, D. C. 1987. Litter placement effects on microbial and organic matter dynamics in an agroecosystem. Ecology 68:425-433.

Hopkins, C. B. 1910. Soil fertility and permanent agriculture. Ginn and Co., Boston. 651 pp.

Houghton, R. A. and Woodwell, G. M. 1989. Global climate change. Scientific American 260:36-44.

House, G. J., Stinner, B. J., Crossley, D. A. Jr., Odum, E. P., and Langdale, G. W. 1984. Nitrogen cycling in conventional and no-tillage agroecosystems in the Southern Fiedmont. Journal of Soil and Water Conservation 39:194-200.

Howard-Williams, C. 1974. Nutritional quality and calorific value of Amazonian forest litter. Amazonia 1:7-75.

Huang, P. H. and Schnitzer, M. (eds.) 1986. Interactions of soil minerals with natural organics and microbes. Special Publication 17. Soil Science Society of America, Madison, Wisconsin. 606 pp.

Hue, N. V., Craddock, G., and Adams, F. 1986. Effects of organic acids on aluminum toxicity in subsoils. Soil Science Society of America Journal 50:28-34.

Hughes, J. C. 1982. High gradient magnetic separation of some soil clays from Nigeria, Brazil and Colombia. 1. The interrelationships of iron and aluminum extracted by acid ammonium oxalate and carbon. Journal of Soil Science 33:509-519.

Hunt, H. W., Stewart, J. W. B., and Cole, C. V. 1983. A conceptual model for interactions among carbon, nitrogen, sulphur and phosphorus in grasslands. In: B. Bolin and R. B. Cook (eds.), The major biogeochemical cycles and their interactions. Wiley, New York.

Ino, Y. and Monsi, M. 1969. An experimental approach to the calculation of CO_2 amount evolved from several soils. Japanese Journal of Botany 20:153-188.

Islam, A. and Ahmed, B. 1973. Distribution of inositol phosphates, phospholipids, and nucleic acids and mineralization of inositol phosphates in some Bangladesh soils. Journal of Soil Science 24:193-198.

Jager, G. 1971. The effect of living roots and the rhizosphere microflora on the decomposition of organic matter. In: Proceedings of the 4th International Congress of Soil Zoology. INRA, Paris. pp. 57-67.

Jansson, S. L. 1958. Tracer studies on nitrogen transformations in soil with special attention to mineralization-immobilization relationships. Annals of the Royal Agricultural College, Sweden 24:101-361.

Janzen, H. H. 1987. Soil organic matter characteristics after long-term cropping to various spring wheat rotations. Canadian Journal of Soil Science 67:845-856.

Jenkinson, D. S. 1971. Studies on the decomposition of ^{14}C labelled organic matter in soil. Soil Science 111:64-70.

Jenkinson, D. S. and Ayanaba, A. 1977. Decomposition of carbon-14 labeled plant material under tropical conditions. Soil Science Society of America Journal 41:912-915.

Jenkinson, D. S. and Ladd, J. N. 1981. Microbial biomass in soil: measurement and turnover. In: E. A. Paul and J. N. Ladd (eds.), Soil biochemistry, vol. 5. Dekker, New York. pp. 415-471.

Jenkinson, D. S. and Powlson, D. S. 1976. The effects of biocidal treatments on metabolism in soil. V. A method of measuring soil biomass. Soil Biology and Biochemistry 8:209-213.

Jenkinson, D. S. and Rayner, J. H. 1977. The turnover of soil organic matter in some of the Rothamsted classical experiments. Soil Science 123:298-305.

Jenkinson, D. S., Powlson, D. S., and Wedderburn, R. W. M. 1976. The effects of biocidal treatments on metabolism in soil. III. The relationship between soil biovolume, measured by optical microscopy, and the flush of decomposition caused by fumigation. Soil Biology and Biochemistry 8:189-202.

Jenkinson, D. S., Hart, P. B. S., Rayner, J. H., and Parry, L. C. 1987. Modelling the turnover of organic matter in long-term experiments at Rothamsted. INTECOL Bulletin 15:1-8.

Jenny, H. 1941. Factors of soil formation. McGraw-Hill, New York.

Jensen, H. L. 1929. On the influence of the carbon: nitrogen ratios of organic material on the mineralisation of nitrogen. Journal of Agricultural Science 19:71-82.

Johnston, A. E. and Mattingly, G. E. G. 1976. Experiments on the continuous growth of arable crops at Rothamsted and Woburn experimental stations: effects of treatments on crop yields and recent modifications in purpose and design. Annals of Agronomy 27:927-956.

Jones, J. A. 1988. Termites, soil fertility and C cycling in a dry African woodland: a hypothesis. Journal of Tropical Ecology. Updating.

Jones, J. A. 1973. The organic matter content of the savanna soils of West Africa. Journal of Soil Science 24:42-53.

Jones, M. J. 1971. The maintenance of soil organic matter under continuous cultivation at Sameru, Nigeria. Journal of Agricultural Science (Camb.) 77:473-482.

Jones, M. J. and Wild, A. 1975. Soils of the West African savanna. Commonwealth Agricultural Bureau, The Cambrian News, Aberystwyth, Wales. 246 pp.

Jordan, C. F. 1985. Nutrient cycling in tropical forest ecosystems. Wiley, Chichester, England.

Jordan, C. F. and Escalante, G. 1980. Root productivity in an Amazonian rainforest. Ecology 61:14-18.

46

Juma, N. G. and McGill, W. B. 1986. Decomposition and nutrient cycling in agroecosystems. In: M. J. Mitchell and J. P. Nakas (eds.), Microfloral and faunal interactions in natural and agroecosystems. Martinus Nijhoff, Dordrecht, The Hague, The Netherlands. pp. 74-136.

Juma, N. G., Paul, E. A., and Mary, B. 1984. Kinetic analysis of net nitrogen mineralization in soil. Soil Science Society of America Journal 48:753-757.

Juste, C., Delas, J., and Langon, M., 1975. Comparaison de la stabiliée biologique de différents humates metalliques. Comptes Rendus de l'Académie des Sciences, Paris, D. 281:1685-1688.

Kang, B. T. and van der Heide, J. (ed.) 1985. Nitrogen management in farming systems in humid and subhumid tropics. Institute for Soil Fertility, Haren, The Netherlands. 362 pp.

Kavanagh, B. V., Posner, A. M., and Quirk, J. P. 1976. The adsorption of polyvinyl alcohol on gibbsite and goethite. Journal of Soil Science 27:467-477.

Kelley, K. R. and Stevenson, F. J. 1987. Effects of carbon source on immobilization and chemical distribution of fertilizer nitrogen in soil. Soil Science Society of America Journal 51:946-951.

Kelley, K. R. and Stevenson, F. J. 1985. Characterization and extractability of immobilized ^{15}N from the soil microbial biomass. Soil Biology and Biochemistry 17:517-523.

Kemper, W. D. and Rosenau, R. C. 1986. Aggregate stability and size distribution. In: A. Klute (ed.), Methods of soil analysis. Part 1. 2nd ed. American Society of Agronomy, Madison, Wisconsin. pp. 425-442.

Keyes, M. R. and Grier, C. C. 1981. Above and below-ground net production in 40-year-old Douglas-fir stands on low and high productivity sites. Canadian Journal of Forest Research 11:599-605.

Khatibu, A. I., Lal, R., and Jana, R. K. 1984. Effects of tillage methods and mulching on erosion and physical properties of a sandy clay loam in an Equatorial warm humid region. Field Crops Research 8:239-254.

Kigne, J. W. 1968. Heats of wetting and complexes between montmorillonite and alkylammonium compounds. Transactions of the 9th International Congress of Soil Science (Adelaide, Australia) 1:597-605.

Kigne, J. W. and Taylor, S. A. 1964. Heat of wetting organo-montmorillonite complexes. Transactions of the 8th International Congress of Soil Science (Bucharest, Romania) 2:205-209.

Kitazawa, Y., 1967. Community metabolism of soil invertebrates in forest ecosystems of Japan. In: K. Petrusewicz (ed.), Secondary productivity of terrestrial ecosystems. Polish Academy of Science, Warsaw. pp. 649-661.

Kogel, I., Hempfling, R., Zech, W., Hatcher, P. G., and Schulten, H-R. 1988. Chemical composition of the organic matter in forest soils. 1. Forest litter. Soil Science 146:124-136.

Kononova, M. M. 1975. Humus of virgin and cultivated soils. In: J. E. Gieseking (ed.), Soil components. Vol. 1. Organic components. Springer-Verlag, New York. pp. 475-525.

———. 1966. Soil organic matter. 2nd English ed. Pergamon, London.

Kucey, R. M. N. and Paul, E. A. 1982. Carbon flow, photosynthesis and N_2 fixation in mycorrhizal and nodulated faba beans (*Vicia faba* L.). Soil Biology and Biochemistry 14:407-412.

Kumada, K., 1987. Chemistry of soil organic matter. Developments in soil Science 17. Japan Scientific Societies Press, Tokyo/Elsevier, Amsterdam. 241 pp.

Kumazawa, K. 1984. Beneficial effects of organic matter on rice growth and yield in Japan. In: Organic matter and rice. IRRI, Los Banos, The Philippines. pp. 431-454.

Kummert, R. and Stumm, W. 1980. The surface complexation of organic acids on hydrous δ-Al_2O_3. Journal of Colloid Interface Science 75:373-385.

Ladd, J. N., Oades, J. M., and Amato, M. 1981. Microbial biomass formed from ^{14}C-, ^{15}N-labelled plant material decomposing in soils in the field. Soil Biology and Biochemistry 13:119-126.

Ladd, J. N., Parsons, J. W., and Amato, M. 1977a. Studies of nitrogen immobilization and mineralization in calcareous soils. I. Distribution of immobilized nitrogen among soil fractions of different particle size and density. Soil Biology and Biochemistry 9:309-318.

Ladd, J. N., Parsons, J. W., and Amato, M. 1977b. Studies of nitrogen immobilization and mineralization in calcareous soils. II. Mineralization of immobilized nitrogen from soil fractions of different particle size and density. Soil Biology and Biochemistry 9:319-326.

Ladd, J. N., Jackson, R. B., Amato, M., and Butler, H. H. A. 1983. Decomposition of plant material in Australian soils. I. The effect of quantity added on decomposition and on residual microbial biomass. Australian Journal of Soil Research 21:563-570.

Laishram, I. D. and Yadava, P. S. 1988. Lignin and nitrogen in the decomposition of leaf litter in a subtropical forest ecosystem at Shiroy hills in north-eastern India. Plant and Soil 106:59-64.

Lal, R. 1987. Tropical ecology and physical edaphology. Wiley, New York.

———. 1984. Soil erosion from tropical arable lands and its control. Advances in Agronomy 37:183-248.

———. (ed.) 1979. Soil tillage and crop production. Proceedings Series 2. IITA, Ibadan, Nigeria.

———. 1976. Soil erosion problems on an Alfisol in Western Nigeria and their control. Monograph 1. IITA, Ibadan, Nigeria. 208 pp.

Lal, R. and Kang, B. T. 1982. Management of organic matter in soils of the tropics and subtropics. Transactions of the 12th International Congress of Soil Science, New Dehli, India. 4:152-178.

Lal, R., De Vleeschauwer, D., and Nganje, R. M. 1980. Changes in properties at a newly cleared Alfisol as affected by mulching. Soil Science Society of America Journal 44:827-833.

Larson, W. E., Clapp, C. E., Pierre, W. H., and Morachan, Y. B. 1972. Effects of increasing amounts of organic residues on continuous corn. II. Organic carbon, nitrogen, phosphorus, and sulfur. Agronomy Journal 64:204-208.

Larson, W. P., Holt, R. F., and Carlson, C. W. 1978. Residues for soil conservation. Special Publication 31. American Society of Agronomy, Madison, Wisconsin. pp. 1-16.

Lathwell, D. J. and Bouldin, D. R. 1981. Soil organic matter and nitrogen behavior in cropped soils. Tropical Agriculture (Trinidad) 58:341-348.

Lavelle, P. 1988. Earthworm activities and the soil system. Biology and Fertility of Soils 6:237-251.

———. 1987. Biological processes and productivity of soils in the humid tropics. In: R. E. Dickinson (ed.), Geophysiology of Amazonia. Wiley, Chichester, England. pp. 175-223.

———. 1984. The soil system in the humid tropics. Biology International 9:2-20.

———. 1978. Les vers de terre de la savane de Lamto (Cote d'Ivoire): peuplements, populations et fonctions dans l'écosystème. Publication 12. Laboratoire de Zoologie, ENS, Paris. 301 pp.

Lavelle, P., Zaidi, Z., and Schaefer, R. 1983. Interactions between earthworms, soil organic matter and microflora in an African savanna soil. In: P. Lebrun, H. M. Andre, A. de Medts, C. Gregoire-Wibo, and G. Wauthy (eds.), New trends in soil biology. Dieu-Brichart, Louvain-la-Neuve, Belgium. pp. 254-259.

Lawes, J. B. 1889. A history of a field newly laid down to permanent grass. Journal of the Royal Agricultural Society of England. 2nd series 25:1-24.

Lawson, T. L. and Lal, R. 1979. Response of maize to surface and buried straw mulch on a tropical Alfisol. In: R. Lal (ed.), Soil tillage and crop production. Proceedings Series 2. IITA, Ibadan, Nigeria. pp. 63-74.

Lee, K. E. 1985. Earthworms: their ecology and relationships with soils and land use. Academic Press, London and New York.

44

———. 1983. Soil animals and pedological processes. In: Soils: an Australian viewpoint. CSIRO, Melbourne/Academic Press, London. pp. 629-644.

Lee, K. E. and Wood, T. G. 1971. Termites and soils. Academic Press, London. 251 pp.

Legay, B. and Schaefer, R. 1984. Modalities of the energy flow in different tropical soils, as related to their mineralization capacity of organic carbon and to the type of clay. Zentralblatt für Mikrobiologie 139:389-400.

Legay, B. and Schaefer, R. 1981. Modalities of energy-flow in different tropical soils, as related to their mineralization capacity of organic C and to the type of clay. I. Effect of water content and the role of thermic conditions. Zentralblatt für Mikrobiologie 136:461-470.

Levin, D. A. 1971. Plant phenolics: an ecological perspective. American Naturalist 105:157-181.

van der Linden, M. J. H. A. 1971. Availability of protein in leaf litter; an enzymalogical approach. In: Proceedings of the 4th International Congress of Soil Zoology. INRA, Paris. pp. 337-348.

Lindstrom, M. J. and Holt, R. F. 1983. Crop residue removal: the effect on soil erosion and nutrient loss. In: R. R. Lowrance, R. L. Todd, L. E. Asmussen, and R. A. Leonard (eds.), Nutrient cycling in agricultural ecosystems. Special Publication 23. University of Georgia Agricultural Experiment Station, Athens. pp. 427-439.

Lobartini, J. C. and Tan, K. H. 1988. Differences in humic acid characteristics as determined by carbon-13 nuclear magnetic resonance, scanning electron microscopy, and infrared analysis. Soil Science Society of America Journal 52:125-130.

Loomis, R. S. 1978. Ecological dimensions of medieval agrarian systems: an ecologist responds. Agricultural History 52(3):478-483.

Lopes, A. S. 1983. Solos sob Cerrados. Instituto da Potassa e Fosfato, Piracicaba, Brazil. 162 pp.

Lopes, A. S. and Cox, F. R. 1977. A survey of the fertility status of surface soils under "Cerrados" vegetation in Brazil. Soil Science Society of America Journal 41:742-747.

Lowe, L. E. and Hinds, A. A. 1983. The mineralization of nitrogen and sulfur from particle-size separates of gleysolic soils. Canadian Journal of Soil Science 63:761-766.

Luxton, M. 1982. General ecological influence of the soil fauna on decomposition and nutrient circulation. Oikos 39:355-388.

Luxton, M. and Petersen, H. 1982. Survey of the main animal taxa of the detritus food web. Oikos 39:293-294.

Lynch, J. M. and Bragg, E. 1985. Microorganisms and soil aggregate stability. In: B. A. Stewart (ed.), Advances in soil science, vol. 2. Springer-Verlag, New York.

Lynch, J. M. and Panting, L. M. 1980. Cultivation and the soil biomass. Soil Biology and Biochemistry 12:29-33.

Mahareswaran, J. and Gunatilleke, I. U. N. 1988. Litter decomposition in a lowland rainforest and a deforested area in Sri Lanka. Biotropica 20(1):90-99.

Mariotti, A. and Guillet, B. 1987. Natural carbon-13 abundance as a tracer for studies of soil organic matter dynamics. Soil Biology and Biochemistry 19:25-30.

Marsh, K. B., Tillman, R. W., and Syers, J. K. 1987. Charge relationships of sulfate sorption by soils. Soil Science Society of America Journal 51:318-323.

Marshall, J. D. and Waring, R. H. 1985. Predicting fine root production and turnover by monitoring root starch and soil temperature. Canadian Journal of Forest Research 15:791-800.

Martens, R. 1985. Limitations in the application of the fumigation technique for biomass estimation in amended soils. Soil Biology and Biochemistry 17:57-63.

Martin, A., Cortez, J., Barois, I., and Lavelle, P. 1987. Les mucus intestinaux de vers de terre moteurs de leure interactions avec la microflore. Rev. Ecol. Biol. Sol. 24(3):549-558.

Martin, J. K. 1977. Factors influencing the loss of organic carbon from wheat roots. Soil Biology and Biochemistry 9:1-17.

Martin, J. P. and Haider, K. 1980. Microbial degradation and stabilization of ^{14}C-labelled lignins, phenols, and phenolic polymers in relation to soil humus formation. In: T. K. Kirk, T. Higuchi, and H. M. Chang (eds.), Lignin biodegradation: microbiology chemistry and potential applications, vol. 2. CRC Press, West Palm Beach, Florida. pp. 77-100.

Martin, J. P. and Haider, K. 1977. Decomposition in soil of specifically ^{14}C-labelled DHP and corn stalk lignins, model humic acid-type polymers and coniferyl alcohols. In: Soil organic matter studies. Proceedings of the FAO/IAEA Symposium, Braunschweig. IAEA, Vienna. 2:23-32.

Martin, J. P., Ervin, J. O., and Shepherd, R.A. 1966. Decomposition of the iron, aluminum, zinc, and copper salts or complexes of some microbial and plant polysaccharides in soil. Soil Science Society of America Proceedings 30:196-200.

Martin, J. P., Zunino, H., Peirano, P., Caiozii, M., and Haider, K. 1982. Decomposition of ^{14}C-labelled lignins, model humic acid polymers, and fungal melanins in allophanic soils. Soil Biology and Biochemistry 14:289-293.

Martin, J. S. and Martin, M. M. 1982. Tannin assays in ecological studies: lack of correlation between phenolics, proanthocyanidins and protein-precipitating constituents in mature foliage of six oak species. Journal of Chemical Ecology 9:285-294.

Martinez-Ramos, M., Alvarez-Buylla, E., Sarukhan, J., and Pinero, D. 1988. Treefall age determination and gap dynamics in a tropical forest. Journal of Ecology 76:700-716.

Matsumoto, T. and Abe, T. 1979. The role of termites in an equatorial rain forest ecosystem in West Malaysis. II. Leaf litter consumption on the forest floor. Oecologia (Berlin) 38:261-274.

Maurya, P. R. and Lal, R. 1981. Effects of different mulch materials on soil properties and on the root growth and yield of maize and cowpea. Field Crops Research 4:33-45.

McClaugherty, C. A., Aber, J. D., and Melillo, J. M. 1982. The role of fine roots in the organic matter and nitrogen budgets of two forested ecosystems. Ecology 63:1481-1490.

McGill, W. B. and Cole, C. V. 1981. Comparative aspects of organic C, N, S and P cycling through organic matter during pedogenesis. Geoderma 26:267-286.

McGill, W. B. and Myers, R. J. K. 1987. Controls on dynamics of soil and fertilizer nitrogen. In: R. F. Follett, J. W. B. Stewart, and C. V. Cole (eds.), Soil fertility and organic matter as critical components of production systems. Special Publication 19. Soil Science Society of America, Madison, Wisconsin. pp. 73-79.

McGill, W. B. and Paul, E. A. 1976. Fractionation of soil and ^{15}N nitrogen to separate the organic and clay interactions of immobilized N. Canadian Journal of Science 56:203-212.

McGill, W. B., Cannon, K. R., Robertson, J. A., and Cook, F. D. 1986. Dynamics of soil microbial biomass and water-soluble organic C in Breton L after 50 years of cropping to two rotations. Canadian Journal of Soil Science 66:1-19.

McGill, W. B., Hunt, H. W., Woodmansee, R. G., and Reuss, J. O. 1981. PHOENIX, a model of the dynamics of carbon and nitrogen in grassland soils. In: F. E. Clark and T. Rosswall (eds.), Terrestrial nitrogen cycles. Ecological Bulletins (Stockholm) 33:49-115.

McKercher, R. B. and Anderson, G. 1968. Content of inositol penta- and hexa-phosphates in some Canadian soils. Journal of Soil Science 19:47-55.

McLaren, R. G. and Crawford, D. V. 1973. Studies on soil copper. 1. The fractionation of copper in soil. Journal of Soil Science 24:172-181.

McLaughlin, M. J., Alston, A. M., and Martin, J. K. 1988. Phosphorus cycling in wheat-pasture rotations. III. Organic phosphorus turnover and phosphorus cycling. Australian Journal of Soil Research 26:343-353.

McNaughton, S. J. 1983. Serengeti grassland ecology: the role of composite environmental factors and contingency in community organization. Ecological Monographs 53:291-320.

McVey, D., Watermann, P. G., Mbi, C. N., Gartlan, J. S., and Struhsaker, T. T. 1978. Phenolic content of vegetation in two African rain forests: ecological interpretations. Science 202:61-64.

Meentemeyer, V. 1978. Macroclimate and lignin control of decomposition rates. Ecology 59:465-472.

Melillo, J. M. and Gosz, J. R. 1983. Interactions of biogeochemical cycles in forest ecosystems. In: B. Bolin and R. B. Cook (eds.), The major biogeochemical cycles and their interactions. SCOPE Vol. 21. Wiley, Chichester, England. pp. 177-222.

Melillo, J. M., Aber, J. D., and Muratore, J. F. 1982. Nitrogen and lignin control of hardwood leaf litter decomposition dynamics. Ecology 63:621-626.

Milchunas, D. G., Lauenroth, W. K., Singh, J. S., Cole, C. V., and Hunt, H. W. 1985. Root turnover and production by ^{14}C dilution: implications of carbon partitioning in plants. Plant and Soil 88:353-365.

Mizota, C. and Chapelle, J. 1988. Characterization of some Andepts and andic soils in Rwanda, Central Africa. Geoderma 41:193-209.

Mizota, C., Carrasco, M. A., and Wada, K. 1982. Clay mineralogy and some chemical properties of Ap horizons of Ando soils used for paddy rice in Japan. Geoderma 27:225-237.

Mohr, E. C. J. 1930. Tropical soil farming processes and the development of tropical soils. National Geologic Survey of China, Beiping.

Mohr, E. C. J. and van Baren, F. A. 1954. Tropical soils. Van Hoeve, The Hague, The Netherlands.

Molina, J. A. E., Clapp, C. E., Schäffer, M. J., Chichester, F. W., and Larson, W. E. 1983. NCSOIL, a model of nitrogen and carbon transformations in soil; description, calibration and behavior. Soil Science Society of America Journal 47:85-91.

Molloy, L. F. and Blakemore, L. C. 1974. Studies on a climosequence of soils in tussock grasslands. 1. Introduction, sites, and soils. New Zealand Journal of Science 17:233-255.

Molloy, L. F. and Speir, T. W. 1977. Studies on a climosequence of soils in tussock grasslands. 12. Constituents of the soil light fraction. New Zealand Journal of Science 20:167-177.

Molloy, L. F., Bridger, B. A., and Cairns, A. 1977. Studies on a climosequence of soils in tussock grasslands. 13. Structural carbohydrates in tussock leaves,

roots, and litter and in the soil light and heavy fractions. New Zealand Journal of Science 20:443-451.

Monroe, C. D. and Kladivko, E. J. 1987. Aggregate stability of a silt loam soil as affected by roots of corn, soybeans and heat. Communications in Soil Science and Plant Analysis 18:1077-1087.

Moshi, A. O., Wild, A., and Greenland, D. J. 1974. Effect of organic matter on the charge and phosphate adsorption characteristics of Kikuyu red clay from Kenya. Geoderma 22:275-285.

Mueller-Harvey, I., Juo, A. S. R., and Wild, A. 1985. Soil organic C, N, S and P after forest clearance in Nigeria: mineralization rates and spatial variability. Journal of Soil Science 36:585-591.

Muller, R. N., Kalisz, P. J., and Kimmerer, T. W. 1987. Intraspecific variation in production of astringent phenolics over a vegetation-resource availability gradient. Oecologia (Berlin) 72: 211-215.

Munevar, F. and Wollum, A. G. II. 1977. Effects of the additions of phosphorus and inorganic nitrogen on carbon and nitrogen mineralization in Andepts from Colombia. Soil Science Society of America Journal 41:540-545.

Murayama, S. 1988. Microbial synthesis of saccharides in soils incubated with ^{13}C-labelled glucose. Soil Biology and Biochemistry 20:193-199.

Nadelhoffer, K. J., Aber, J. D., and Melillo, J. M. 1985. Fine roots, net primary production, and soil nitrogen availability: a new hypothesis. Ecology 66:1377-1390.

Naske, A. and Richter, J. 1981. N mineralization in Loss-Parabrownearths: Incubation experiments. Plant and Soil 59:237-247.

Nemeth, A. 1981. Estudio ecologico de las lombrices de tierra (Oligochaeta) en ecosistemas de bosque humedo tropical en San Carlos de Rio Negro, Territorio Federal Amazonas. Tesis de Licenciatura, University of Central Venezuela. 92 pp.

Neptune, A M. L., Tabatabai, M. A., and Hanway, J. J. 1975. Sulfur fractions and carbon-nitrogen-phosphorus-sulfur relationships in some Brazilian and Iowa soils. Soil Science Society of America Proceedings 39:51-54.

Newberry, D. McC. and Proctor, J. 1984. Ecological studies in four contrasting lowland rainforests in Gunung Mulu National Park, Sarawak. IV. Associations between tree distribution and soil factors. Journal of Ecology 72:475-493.

Newman, R. H., Theng, B. K. G., and Filip, Z. 1987. Carbon-13 nuclear magnetic resonance spectroscopic characterisation of humic substances from municipal refuse decomposing in a landfill. Science of the Total Environment 65:69-84.

Nip, M., Tegelaar, E. W., Brinkhuis, H., De Leeuw, J. W., Schenck, P. A., and Holloway, P. J. 1986. Analysis of modern and fossil plant cuticles by Curie point

Py-GC and Curie point Py-GC-MS: recognition of a new, highly aliphatic and resistant biopolymer. Organic Geochemistry 10:769-778.

van Noordwijk, M. 1987. Methods for quantification of root distribution pattern and root dynamics in the field. International Potash Institute, Baden bei Wien, Austria. pp. 243-262.

Nye, P. H. and Bertheux, M. H. 1957. The distribution of phosphorus in forest and savanna soils of the Gold Coast and its agricultural significance. Journal of Agricultural Science 49:141-159.

Nye, P. H. and Greenland, D. J. 1960. The soil under shifting cultivation. Technical Communication 51. Commonwealth Bureau of Soils, Slough, England.

Oades, J. M. 1988a. An introduction to organic matter in mineral soils. Chapter 3, in: S. B. Weed and J. B. Dixon (eds.), Minerals in soil environments, 2nd ed. Soil Science Society of America, Madison, Wisconsin. pp. 187-259.

———. 1988b. The retention of organic matter in soils. Biogeochemistry 5:35-70.

———. 1984. Soil organic matter and structural stability: mechanisms and implications for management. Plant and Soil 76:319-337.

———. 1972. Studies on soil polysaccharides. III. Composition of polysaccharides in some Australian soils. Australian Journal of Soil Research 10:113-126.

———. 1967. Carbohydrates in some Australian soils. Australian Journal of Soil Research 5:103-115.

Oades, J. M. and Ladd, J. N. 1977. Biochemical properties: carbon and nitrogen metabolism. In: J. S. Russell and E. S. Greachen (eds.), Soil factors in crop production in a semi-arid environment. University of Queensland Press, St. Lucia, Australia. pp. 127-160.

Oades, J. M. and Tipping, E. 1988. Interactions of humic substances with oxides. In: M. H. B. Hayes, P. McCarthy, R. L. Malcolm, and R. S. Swift (eds.), Humic substances in soil, sediment and water. III. Interactions with metals, minerals and organic chemicals. Proceedings 2nd Conference of the International Humic Substances Society, Birmingham, U.K., July 1984. Wiley, Chichester, England. In press.

Oades, J. M. and Turchenek, L. W. 1978. Accretion of organic carbon, nitrogen and phosphorus in sand and silt fractions of a red-brown earth under pasture. Australian Journal of Soil Research 16:351-354.

Oades, J. M., Vassallo, A. M., Waters, A. G., and Wilson, M. A. 1987. Characterization of organic matter in particle size and density fractions from a red-brown earth by solid-state ^{13}C N. M. R. Australian Journal of Soil Research 25:71-82.

Oades, J. M., Waters, A. G., Vassallo, A. M., Wilson, M. A., and Jones, G. P. 1988. Influence of management on the composition of organic matter in a red-brown earth as shown by ^{13}C nuclear magnetic resonance. Australian Journal of Soil Research 26:289-299.

Ochwald, W. R. (ed.) 1978. Crop residue management systems. Special Publication 31. American Society of Agronomy, Madison, Wisconsin. 248 pp.

Ogner, G. 1985. A comparison of four different raw humus types in Norway using chemical degradations and CPMAS ^{13}C NMR spectroscopy. Geoderma 35:343-353.

Oh, W. K. 1984. Effects of organic matter on rice production. In: Organic matter and rice. IRRI, Los Banos, The Philippines. pp. 477-488.

Ohiagu, C. E. and Wood, T. G. 1979. Grass production and decomposition in southern Guinea savanna, Nigeria. Oecologia (Berlin) 40.

Olsen, S. R. 1986. The role of organic matter and ammonium in producing high corn yields. In: Y. Chen and Y. Avnimelech (eds.), The role of organic matter in modern agriculture. Martinus Nijhoff, Dordrecht, The Netherlands. pp. 29-54.

Olson, R. A. and Englestad, O. P. 1972. Soil phosphorus and sulfur. In: Soils of the humid tropics. National Academy of Science, Washington, D.C. pp. 82-101.

Orem, W. H. and Hatcher, P. G. 1987. Solid-state ^{13}C NMR studies of dissolved organic matter in pore waters from different depositional environments. Organic Geochemistry 11:73-82.

Orlov, D. S. 1985. Humus acids of soils. [Translation from Russian.] Amerind Publishing Co. Pvt. Ltd., New Delhi, India.

Page, A. L., Miller, R. H., and Keeney, D. R. 1986. Methods of soil analysis: Part 2. 2nd ed. American Society of Agronomy. Madison, Wisconsin.

Palm, C. A. 1988. Mulch quality and nitrogen dynamics in an alley cropping system in the Peruvian Amazon. Ph.D. dissertation, Soil Science Department, North Carolina State University, Raleigh. 112 pp.

Pang, P. C. and Paul, E. A. 1980. Effects of vesicular-arbuscular mycorrhizae on ^{14}C and ^{15}N distribution in nodulated faba beans. Canadian Journal of Soil Science 60:241-250.

Pardo, M. T. and Guadalix, M. E. 1988. Surface charge characteristics of volcanic ash soils from Spain. Effect of organic matter and mineralogical composition. Communications in Soil Science and Plant Analysis 19:259-269.

Parfitt, R. L., Farmer, V. C., and Russell, J. D. 1977a. Adsorption of hydrous oxides. I. Oxalate and benzoate on goethite. Journal of Soil Science 28:29-39.

Parfitt, R. L., Fraser, A. R., Russell, J. D., and Farmer, V. C. 1977b. Adsorption on hydrous oxides. II. Oxalate benzoate and phosphate on gibbsite. Journal of Soil Science 28:40-47.

Parfitt, R. L., Fraser, A. R., and Farmer, V. C. 1977c. Adsorption on hydrous oxides. III. Fulvic acid and humic acid on goethite, gibbsite and imogolite. Journal of Soil Science 28:289-296.

Parker, J. C., Zelazny, L. W., Sampath, S., and Harris, W. G. 1979. A critical evaluation of the extension of zero point of charge (ZPC) theory to soil systems. Soil Science Society of America Journal 43:668-674.

Parr, J. F. and Papendick, R. I. 1978. Factors affecting the decomposition of crop residues by microorganisms. Special Publication 31. American Society of Agronomy, Madison, Wisconsin. pp. 101-1030.

Parsons, J. W. 1988. Isolation of humic substances from soils and sediments. In: F. L. Frimmel and R. F. Christman (eds.), Humic substances and their role in the environment. Wiley, New York. pp. 2-14.

Parton, W. J., Stewart, J. W. B., and Cole, C. V. 1988. Dynamics of C, N, P and S in grassland soils: a model. Biogeochemistry 5:109-131.

Parton, W. J., Anderson, D. W., Cole, C. V., and Stewart, J. W. B. 1983. Simulation of soil organic matter formations and mineralization in semiarid agroecosystems. In: R. R. Lowrance, R. L. Todd, L. E. Asmussen, and R. A. Leonard (eds.), Nutrient cycling in agricultural ecosystems. Special Publication 23. University of Georgia Agricultural Experiment Station, Athens. pp. 533-550.

Parton, W. J., Schimel, D. S., Cole, C. V., and Ojima, D. S. 1987. Analysis of factors controlling soil organic matter levels in Great Plains grasslands. Soil Science Society of America Journal 51:1173-1179.

Parton, W. J., Cole, C. V., Stewart, J. W. B., Ojima, D. S., and Schimel, D. S. 1989. Simulating regional patterns of soil C, N, and P dynamics in the U.S. central grasslands region. Plant and Soil. In Press.

Pashanasi, B. and Lavelle, P. 1987. Soil macrofauna as affected by management practices. In: TropSoils/NCSU technical report for 1986-1987. Tropical Soils Research Program, Department of Soil Science, North Carolina State University, Raleigh.

Pastor, J. and Post, W. M. 1986. Influence of climate, soil moisture and succession on forest carbon and nitrogen cycles. Biogeochemistry 2:3-27.

Pate, J. S., Layzell, D. B., and Atkins, C. A. 1979. Economy of carbon and nitrogen in a nodulated and non nodulated (NO_3 grown) legume. Plant Physiology 64:1083-1088.

Paul, E. A. 1984. Dynamics of organic matter in soils. Plant and Soil 76:275-285.

Paul, E. A. and Juma, N. G. 1981. Mineralization and immobilization of soil nitrogen by microorganisms. In: F. E. Clark and T. Rosswall (eds.), Terrestrial nitrogen cycles. Ecological Bulletin (Stockholm) 33:179-195.

Paul, E. A. and van Veen, J. A. 1979. The use of tracers to determine the dynamic nature of organic matter. In: J. R. Gasser (ed.), Modelling nitrogen from farm wastes. Applied Science Publishers, London. pp. 75-132.

Paul, E. A. and van Veen, J. A. 1978. The use of tracers to determine the dynamic nature of organic matter. Transactions of the 11th International Congress of Soil Science (Edmonton). 3:61-102.

Paul, E. A. and Voroney, R. P. 1983. Field interpretation of microbial biomass activity measurements. In: M. J. Klug and C. A. Reddy (eds.), Current perspectives in microbial ecology. American Society for Microbiology, Michigan State University, East Lansing.

Paustian, K. and Bonde, T. A. 1987. Interpreting incubation data on nitrogen mineralization from soil organic matter. INTECOL Bulletin 15:101-112.

Perfect, T. J., Cook, A. C., and Swift, M. J. 1980. The effects of changing agricultural practice on the biology of a forest soil in the sub-humid tropics. I. The soil fauna. In: J. I. Furtado (ed.), Tropical ecology and development. International Society of Tropical Ecology, Kuala Lumpur, Malaysia. pp. 531-540.

Perrott, K. W. and Sarathchandra, S. U. 1987. Nutrient and organic matter levels in a range of New Zealand soils under established pasture. New Zealand Journal of Agricultural Research 30:249-259.

Persson, H. 1983. The distribution and productivity of fine roots in boreal forests. Plant and Soil 71:87-101.

———. 1980. Spatial distribution of fine roots growth, mortality and decomposition in a young Scots pine stand in central Sweden. Oikos 34:77-80.

Petersen, H. 1982. The total soil fauna biomass and its composition. Oikos 39:330-339.

Phillipson, J. 1973. The biological efficiency of protein production by grazing and other land-based systems. In: J. G. W. Jones (ed.), The biological efficiency of protein production. Cambridge University Press, Cambridge, England. pp. 217-235.

Pomeroy, D. E. 1983. Some effects of mound-building termites on the soils of a semi-arid area of Kenya. Journal of Soil Science 34:555-570.

Post, W. M., Emanuel, W. R., Zinke, P. J., and Stangenberger, A. G. 1982. Soil carbon pools and world life zones. Nature 298:156-159.

Post, W. M., Pastor, J., Zinke, P. J., and Stangenberger, A. G. 1985. Global patterns of soil nitrogen storage. Nature 317:613-616.

Preston, C. M. and Ripmeester, J. A. 1983. ^{13}C labelling for NMR studies of soils: direct CPMAS NMR observation of ^{13}C-acetate transformation in a mineral soil. Canadian Journal of Soil Science 63:495-500.

Preston, C. M. and Ripmeester, J. A. 1982. Application of solution and solid-state ^{13}C NMR to four organic soils, their humic acids, fulvic acids, humins and hydrolysis residues. Canadian Journal of Spectroscopy 27:99-105.

Preston, C. M., Schnitzer, M., and Ripmeester, J. A. 1989. Carbon-13 CPMAS NMR and chemical investigations of HCL/HF deashing of humin from a mineral soil. Soil Science Society of America Journal. In Press.

Preston, C. M., Dudley, R. L., Fyfe, C. A., and Mathur, S. P. 1984. Effects of variations in contact times and copper contents on a ^{13}C CPMAS NMR study of samples of four organic soils. Geoderma 33: 245-253.

Preston, C. M., Shipitalo, S.-E., Dudley, R. L., Fyfe, C. A., Mathur, S. P., and Levesque, M. 1987. Comparison of ^{13}C CPMAS NMR and chemical techniques for measuring the degree of decomposition in virgin and cultivated peat profiles. Canadian Journal of Soil Science 67:187-198.

Proctor, J. 1983. Tropical forest litter. In: S. L. Sutton, T. C. Whitmore, and A. C. Chardwick (eds.), Tropical rain forest: ecology and management. Blackwell Scientific, Oxford, England, pp 263-273.

Proctor, J., Anderson, J. M., Chai, and Vallack, H. W. 1983. Ecological studies in four contrasting lowland rainforests in Gunung Mulu National Park, Sarawak. I. Forest environment, structure and floristics. Journal of Ecology 71:237-260.

Radcliffe, D. E. and Gillman, G. P. 1985. Surface charge characteristics of volcanic ash soils from the Southern Highlands of Papua, New Guinea. In: E. Fernandez Caldas and D. H. Yaalon (eds.), Volcanic soils. Catena supplement 7. Catena-Verlag.

Ramsay, A. J., Stannard, R. E., and Churchman, G. J. 1986. Effect of conversion from ryegrass pasture to wheat cropping on aggregation and bacterial populations in a silt loam soil in New Zealand. Australian Journal of Research 24:253-264.

Rice, C. W., Smith, M. S., and Blevins, R. L. 1986. Soil nitrogen availability after long-term continuous no-tillage and conventional corn production. Soil Science Society of America Journal 50:1206-1210.

Robertson, G. P. 1984. Nitrification and nitrogen mineralization in a lowland rainforest succession in Costa Rica, Central America. Oecologia (Berlin) 61:91-95.

Robertson, G. P., Herrera, R., and Rosswall, T. (eds.) 1982. Nitrogen cycling in ecosystems of Latin America and the Caribbean. Martinus Nijhoff, Dordrecht, The Netherlands. 430 pp.

Robertson, G. P., K. Schnurer, J., Clarholm, M., Bonde, T. A., and Rosswall, T. 1988. Microbial biomass in relation to C and N mineralization during laboratory incubations. Soil Biology and Biochemistry 20:281-286.

Ross, D. J. and Tate, K. R. 1982. Microbial biomass of some yellow-brown loams under pasture and maize cultivation. In: Soil groups of New Zealand, part 6. Yellow-brown loams. New Zealand Society of Soil Science, Lower Hutt. pp. 78-80.

Ross, D. J., Tate, K. R., Cairns, A., and Pansier, E. A. 1980. Microbial biomass estimations in soils from tussock grasslands by three biochemical procedures. Soil Biology and Biochemistry 12:375-383.

Rosswall, T. (ed.) 1980. Nitrogen cycling in West African ecosystems. Royal Swedish Academy of Sciences, Stockholm. 449 pp.

Rusek, J. 1986. Soil microstructures – contributions on specific soil organisms. In: Faunal influences on soil structure. Quaestiones Entomologicae 21:497-514.

Russell, E. W. 1981. Soil conditions and plant growth, 10th ed. Longman, New York.

Ryszkowski, L. 1985. Impoverishment of soil fauna due to agriculture. IN-TECOL Bulletin 12:7-17.

Safford, L. O. 1974. Effects of fertilization on fine root nutrients and biomass. Plant and Soil 40:349-363.

Saggar, S., Bettany, J. R., and Stewart, J. W. B. 1981. Measurement of microbial sulphur in soil. Soil Biology and Biochemistry 13:493-498.

Saiz-Jimenez, C. and de Leeuw, J. W. 1987. Chemical structure of soil humic acid as revealed by analytical pyrolysis. Journal of Analytical Pyrolysis 11:367-376.

Saiz-Jimenez, C. and de Leeuw, J. W. 1986a. Chemical characterization of soil organic matter fractions by analytical pyrolysis-gas chromatography-mass spectrometry. Journal of Analytical and Applied Pyrolysis 9:99-119.

Saiz-Jimenez, C. and de Leeuw, J. W. 1986b. Lignin pyrolysis products: their structures and their significance as biomarkers. Organic Geochemistry 10:869-876.

Salzman, P. C. 1980. When nomads settle. Praeger, New York. 184 pp.

Sanchez, P. A. 1976. Properties and management of soils in the tropics. Wiley, New York. 618 pp.

Sanchez, P. A. and Benites, J. R. 1987. Low-input cropping for acid soils of the humid tropics. Science 238:1521-1527.

Sanchez, P. A. and Buol, S. W. 1975. Soils of the tropics and the world food crisis. Science 188:598-603.

Sanchez, P. and Miller, R. H. 1986. Organic matter and soil fertility management of acid soils in the tropics. Transactions of the 13th International Congress of Soil Science (Hamburg) 6:609-625.

Sanchez, P. and Salinas, J. G. 1981. Low-input technology for managing Oxisols and Ultisols in tropical America. Advances in Agronomy 34:279-406.

Sanchez, P., Gichuru, M. P., and Katz, L. B. 1982. Organic matter in major soils of the tropical and temperate regions. Transactions of the 12th International Congress of Soil Science (New Delhi) 1:99-114.

Sanchez, P., Villachica, J. H., and Bandy, D. E. 1983. Soil fertility dynamics after clearing a tropical rainforest in Peru. Soil Science Society of America Journal 47:1171-1178.

Sanford, R. L. Jr. 1985. Root ecology of mature and successional Amazon forests. Ph.D. dissertation. University of California, Berkeley.

Santantonio, D., Hermann, R. K., and Overton, W. S. 1977. Root biomass studies in forest ecosystems. Pedobiologia 17:1-31.

Sarmiento, G. 1984. The ecology of neotropical savannas. Harvard University Press, Cambridge, Massachusetts. 235 pp.

Sauerbeck, D. R. and Gonzalez, M. A. 1977. Field decomposition of carbon-14 labelled plant residues in various soils of the Federal Republic of Germany and Costa Rica. In: Soil organic matter studies. Proceedings of the FAO/IAEA Symposium, vol. 1. IAEA, Vienna. pp. 159-170.

Schaefer, D., Steinberger, Y., and Whitford, W. G. 1985. The failure of nitrogen and lignin control of decomposition in a North American desert. Oecologia (Berlin) 65:382-386.

Scharpenseel, H. W. and Schiffman, H. 1977. Radiocarbon dating of soils, a review. Zeitschrift für Pflanzenesnaehrung und Bodenkunde 140: 159-174.

Schnitzer, M. 1978. Humic substances: chemistry and reactions. In: M. Schnitzer and S. U. Khan (eds.), Soil organic matter. Elsevier, New York. pp. 1-58.

———. 1977. Recent findings on the characterization of humic substances extracted from soils from widely differing climatic zones. In: Soil organic matter studies, vol. II. International Atomic Energy Agency, Vienna. pp. 117-132.

———. 1972. Chemical, spectroscopic, and thermal methods for the classification and characterization of "humic substances." In: Proceedings of the International Meeting on Humic Substances. Wageningen. pp. 293-310.

Schnitzer, M. and Chan, Y. K. 1986. Structural characteristics of a fungal melanin and a soil humic acid. Soil Science Society of America Journal 50:67-71.

Schnitzer, M. and Khan, S. U. 1978. Soil organic matter. Elsevier, New York.

Schuppli, P. A. and McKeague, J. A. 1984. Limitations of alkali-extractable organic fractions as bases of soil classification criteria. Canadian Journal of Soil Science 64:173-186.

Schwartz, D., Mariotti, A., Lanfranchi, R., and Gulliet, B. 1986. $^{13}C/^{12}C$ ratios of soil organic matter as indicators of vegetation changes in the Congo. Geoderma 39:97-103.

Schwertmann, U., Kodama, H., and Fischer, W. O. 1986. Mutual interactions between organics and iron oxides. Chapter 7, in: P. M. Huang and M. Schnitzer (eds.), Interactions of soil minerals with natural organics and microbes. Special Publication 17. Soil Science Society of America, Madison, Wisconsin.

Sequi, P., Aringhieri, R., and Pardini, G. 1980. Effect of peroxidation on soil electrochemical properties. Zeitschrift für Pflanzenernahrung und Bodenkunde 143:298-305.

Sharpley, A. N. and Smith, S. J. 1983. Distribution of phosphorus forms in virgin and cultivated soils and potential erosion losses. Soil Science Society of America Journal 47:581-586.

Shaw, C. and Pawluk, S. 1986. Faecal microbiology of Octolasion tyrtaeum, Aporrectodea turgida and Lumbricus terrestris and its relation to the carbon budgets of three artificial soils. Pedobiologia 29:377-389.

Shen, S. M., Pruden, G., and Jenkinson, D. S. 1984. Mineralization and immobilization of nitrogen in fumigated soil and the measurement of microbial biomass nitrogen. Soil Biology and Biochemistry 16:437-444.

Shoji, S., Ito, T., Nakamura, S., and Saigusa, M. 1987. Properties of humus of Andosols from New Zealand, Chile and Ecuador. Japanese Journal of Soil Science and Plant Nutrition 58:4873-4879.

Siem, N. T., Fridland, V. M., and Orlov, D. S. 1977. Composition and properties of the humic substances of the major soils of North Vietnam. Pochvovedenie 8:39-54.

Singh, J. S. and Gupta, S. R. 1977. Plant decomposition and soil respiration in terrestrial ecosystems. Botanical Review 43:449-528.

Singh, J. S., Laurenroth, W. K., Hunt, H. W., and Swift, D. M. 1984. Bias and random errors in estimates of root production: a simulation approach. Ecology 65:1760-1764.

Skjemstad, J. O., Dalal, R. C., and Barron, P. F. 1986. Spectroscopic investigations of cultivation effects on organic matter of Vertisols. Soil Science Society of America Journal 50:354-359.

Smith, M. S., Frye, W. W., and Varco, J. J. 1987. Legume winter cover crops. Advances in Soil Science 7:95-139.

Smith, S. J. and Young, L. J. 1975. Distribution of nitrogen forms in virgin and cultivated soils. Soil Science 120:354-360.

Sobrado, M. A. and Medina, E. 1980. General morphology, anatomical structure and nutrient content of sclerophyllus leaves of the "Bana" vegetation of Amazonas. Oecologia (Berlin) 45:341-345.

Soil Survey Staff. 1987. Keys to Soil Taxonomy. SMSS Technical Monograph 6. Cornell University, Ithaca, New York.

———. 1975. Soil Taxonomy: a basic system of soil classification for making and interpreting soil surveys. USDA Department of Agriculture Handbook 436. Government Printing Office, Washington, D.C.

Sollins, P., Robertson, G. P., and Uehara, G. 1989. Nutrient mobility in variable- and permanent-charge soils. Biogeochemistry. In Press.

Sollins, P., Spycher, G., and Glassman, C. A. 1984. Net nitrogen mineralization from light- and heavy-fraction forest soil organic matter. Soil Biology and Biochemistry 16:31-38.

Sørensen, L. H. 1981. Carbon-nitrogen relationships during the humification of cellulose in soils containing different amounts of clay. Soil Biology and Biochemistry 13:313-321.

———. 1974. Rate of decomposition of organic matter in soil as influenced by repeated air drying-rewetting and repeated additions of organic matter. Soil Biology and Biochemistry 6:287-292.

Sowden, F. J., Chen, Y., and Schnitzer, M. 1977. The nitrogen distribution in soils formed under widely differing climatic conditions. Geochim. Cosmochim. Acta 41:1524-1526.

Sowden, F. J., Griffith, S. M., and Schnitzer, M. 1976. The distribution of nitrogen in some highly organic tropical volcanic soils. Soil Biology and Biochemistry 8:55-60.

Spain, A. V. and Hutson, B. R. 1983. Dynamics and fauna of the litter layers. In: Soils: an Australian viewpoint. CSIRO, Melbourne/Academic Press, London. pp. 611-623.

Spain, A. V., Isbell, R. F., and Probert, M. E. 1983. Soil organic matter. In: Soils: an Australian viewpoint. CSIRO, Melbourne/Academic Press, London. pp. 551-563.

Sparling, G. P. 1981. Microcalorimetry and other methods to assess biomass and activity in soil. Soil Biology and Biochemistry 13:93-98.

Sparling, G. P. and West, A. W. 1988a. A direct extraction method to estimate soil microbial C: calibration *in situ* using microbial respiration and ^{14}C-labelled cells. Soil Biology and Biochemistry 20:337-343.

Sparling, G. P. and West, A. W. 1988b. Modifications to the fumigation-extraction technique to permit simultaneous extraction and estimation of soil microbial C and N. Communications in Soil Science and Plant Analysis 19:327-344.

Sposito, G. 1984. The surface chemistry of soils. Oxford University Press, New York.

Sposito, G. and Schindler, P. W. 1986. Reactions at the soil colloid-soil solution interface. Transactions of the 13th International Congress of Soil Science (Hamburg) 6:683-699.

Spycher, G. and Young, J. L. 1977. Density fractionation of water-dispersible soil organic-mineral particles. Communications in Soil Science and Plant Analysis 8:37-48.

Spycher, G., Sollins, P., and Rose, S. L. 1983. Carbon and nitrogen in the light fraction of a forest soil: vertical distribution and seasonal patterns. Soil Science 135:79-87.

Stanford, G. and Epstein, E. 1974. Nitrogen mineralization-water relations in soils. Soil Science Society of America Proceedings 38:103-107.

Stanford, G. and Smith, S. J. 1972. Nitrogen mineralization potentials of soils. Soil Science Society of America Proceedings 36:465-472.

Stanford, G., Frere, M. H., and Schwaniger, D. E. 1973. Temperature coefficients of soil nitrogen mineralization. Soil Science 115:321-323.

Stefanson, R. C. 1971. Effect of periodate and pyrophosphate on the seasonal changes in aggregate stabilization. Soil Research 9:33-41.

Stevenson, F. J. 1986. Cycles of soil: carbon, nitrogen, phosphorus, sulfur, micronutrients. Wiley, New York. 380 pp.

———. 1982a. Humus chemistry: genesis, composition, reactions. Wiley, New York. 443 pp.

———. 1982b. Organic forms of soil nitrogen. In: F. J. Stevenson (ed.), Nitrogen in agricultural soils. American Society of Agronomy, Madison, Wisconsin. pp. 67-122.

Stevenson, F. J. and Fitch, A. 1986. Chemistry of complexation of metal ions with soil solution organics. In: P. M. Huang and M. Schnitzer. (eds.), Interactions of soil minerals with natural organics and microbes. Soil Science Society of America Special Publication 17. Madison, Wisconsin. pp. 29-58.

Stoop, W. 1980. Ion adsorption mechanisms in oxidic soils; implications for point of zero charge determinations. Geoderma 23:303-314.

Stott, D. E., Kassim, G., Jarrell, W. M., Martin, J. P., and Haider, K. 1983. Stabilization and incorporation into biomass of specific plant carbons during biodegradation in soil. Plant and Soil:15-26.

Stout, J. D. and Lee, K. E. 1980. Ecology of soil micro- and macro-organisms. In: B. K. G. Theng (ed.), Soils with variable charge. New Zealand Society of Soil Science, Lower Hutt. pp. 353-372.

Swift, M. J. (ed.) 1986. Tropical soil biology and fertility: inter-regional research planning workshop. International Union of Biological Sciences, Paris.

———. 1985. Tropical soil biology and fertility (TSBF). Planning for research. Special Issue 9. Biology International, International Union of Biological Sciences, Paris. 24 pp.

Swift, M. J. and Sanchez, P. A. 1984. Biological management of tropical soil fertility for sustained productivity. Nature and Resources 10:1-8.

Swift, M, J., Russel-Smith, A., and Perfect, T. J. 1981. Decomposition and mineral nutrient dynamics of plant litter in a regenerating bush fallow in the sub-humid tropics. Journal of Ecology 69:981-995.

Swift, M. J., Heal, O. W., and Anderson, J. M. 1979. Decomposition in terrestrial ecosystems. Blackwell Scientific, Oxford, England.

Swift, R. S. 1985. Fractionation of soil humic substances. In: G. R. Aiken, D. M. McKnight, R. L. Wershaw, and P. MacCarthy (eds.), Humic substances in soil, sediment, and water. Wiley, New York. pp. 397-408.

Szott, L. T. 1987. Improving the productivity of shifting cultivation in the Amazon Basin of Peru through the use of leguminous vegetation. Ph.D. dissertation. North Carolina State University, Raleigh. 168 pp.

Tabatabai, M. A. and Al-Khafaji, A. A. 1980. Comparison of nitrogen and sulfur mineralization in soils. Soil Science Society of America Journal 44:1000-1006.

Talpaz, H.P., Fine, P., and Bar-Yosef, B. 1981. On the estimation of N-mineralization parameters from incubation experiments. Soil Science Society of America Journal 45:993-996.

Tanner, E. V. J. 1981. The decomposition of leaf litter in Jamaican rain forests. Journal of Ecology 69:263-275.

Tate, K. R. 1984. The biological transformation of P in soil. Plant and Soil 76:245-256.

Tate, K. R. and Churchman, G. J. 1978. Organo-mineral fractions of a climosequence of soils in New Zealand tussock grasslands. Journal of Soil Science 29:331-339.

Tate, K. R. and Newman, R. H. 1982. Phosphorus fractions of a climosequence of soils in New Zealand tussock grassland. Soil Biology and Biochemistry 14:191-196.

Tate, K. R. and Theng, B. K. G. 1980. Organic matter and its interactions with inorganic soil constituents. Chapter 12, in: B. K. G. Theng (ed.), Soils with

variable charge. New Zealand Society of Soil Science, Lower Hutt. pp. 225-249.

Tate, K. R., Ross, D. J., and Feltham, C. W. 1988. A direct extraction method to estimate soil microbial C: effects of experimental variables and some different calibration procedures. Soil Biology and Biochemistry 20:319-335.

Tate, K. R., Yamamoto, K., Churchman, G. J., Meinhold, R., and Newman, R.H. 1990. Relationships between the type and carbon chemistry of humic acids from some New Zealand and Japanese soils. Soil Science and Plant Nutrition. In Press.

Tate, R. L. III. 1987. Soil organic matter: biological and ecological effects. Wiley, New York. 291 pp.

Taylor, H. M. (ed.) 1987. Minirhizotron observation tubes: methods and applications for measuring rhizosphere dynamics. Special Publication 150. American Society of Agronomy, Madison, Wisconsin. 143 pp.

Tenney, G. and Waksman, S. A. 1929. Composition of natural organic materials and their decomposition. IV. The nature and rapidity of decomposition of the various organic complexes in different plant materials, under areobic conditions. Soil Science 28:55-84.

Tessens, E. and Zauyah, S. 1982. Positive permanent charge in Oxisols. Soil Science Society of America Journal 46:1103-1106.

Theng, B. K. G. 1987. Clay-humic interactions and soil aggregate stability. In: P. Rengasamy (ed.), Soil structure and aggregate stability. Seminar Proceedings. Institute of Irrigation and Salinity Research, Tatura, Australia. pp. 32-73.

———. 1979. Formation and properties of clay-polymer complexes. Developments in Soil Science 9. Elsevier, Amsterdam. 362 pp.

Theng, B. K. G., Churchman, G. J., and Newman, R. H. 1986. The occurrence of interlayer clay-organic complexes in two New Zealand soils. Soil Science 142:262-266.

Tiessen, H. and Stewart, J. W. B. 1988. Light and electron microscopy of stained microaggregates: the role of organic matter and microbes in soil aggregation. Biogeochemistry 5:312-322.

Tiessen, H. and Stewart, J. W. B. 1983. Particle size fractions and their use in studies of soil organic matter. II. Cultivation effects on organic matter composition in size fractions. Soil Science Society of America Journal 47:509-514.

Tiessen, H., Karamanos, R. H., Stewart, J. W. B., and Selles. F. 1984a. Natural nitrogen-15 abundance as a indicator of soil organic matter transformations in native and cultivated soils. Soil Science Society of America Journal 48:312-315.

Tiessen, H., Stewart, J. W. B., and Cole, C. V. 1984b. Pathways of phosphorus transformations in soils of differing pedogenesis. Soil Science Society of America Journal 48:853-858.

Tiessen, H., Stewart, J. W. B., and Hunt, H. W. 1984c. Concepts of soil organic matter transformations in relation to organo-mineral particle size fractions. Plant and Soil 76:287-295.

Tiessen, H., Stewart, J. W. B., and Moir, J. O. 1983. Changes in organic and inorganic phosphorus composition of two grassland soils and their particle size fractions during 60-90 years of cultivation. Journal of Soil Science 34:815-823.

Tinker, P. B. H. and Ziboh, C. O. 1959. A study of some typical soils supporting oil palms in southern Nigeria. Journal of the West African Institute for Oil Palm Research 3:16-51.

Tipping E. 1981. Adsorption by goethite (α-FeOOH) of humic substances from three different lakes. Chemical Geology 33:81-89.

Tisdale, S. L. and Nelson, W. E. 1956. Soil fertility and fertilizers. Macmillan, New York.

Tisdall, J. M. and Oades, J. M. 1982. Organic matter and water-stable aggregates in soils. Journal of Soil Science 33:141-163.

Tisdall, J. M. and Oades, J. M. 1980. The effect of crop rotation on aggregation in a red-brown earth. Australian Journal of Soil Research 18:423-433.

Tiwari, K. N., Tiwari, S. P., and Pathak, A. N. 1980. Studies on green manuring of rice in double cropping system in a partially reclaimed saline sodic soil. Indian Journal of Agronomy 25:136-145.

Toreu, B. N., Thomas, F. G., and Gillman, G. P. 1988. Phosphate sorption characteristics of soils of the north Queensland coastal region. Australian Journal of Soil Research 26:465-477.

Toutain, F. 1987. Les litières: siège de systèmes interactifs et moteur de ces interactions. Revue d'Ecologie et de Biologie du Sol 24:231-242.

Trapnell, C. G., Friend, M. T., Chamberlain, G. T., and Birch, H. F. 1976. The effects of fire and termites on a Zambian woodland soil. Journal of Ecology 64:577-588.

TropSoils. 1987. Technical report for 1985-1986. North Carolina State University, Raleigh.

Tsutsuki, K., Suzuki, C., Kuwatsuka, S., Becker-Heidmann, P., and Scharpenseel, H. W. 1988. Investigation on the stabilization of the humus in Mollisols. Zeitschrift für Pflanzenernahrung und Bodenkunde 151:87-90.

Turchenek, L. W. and Oades, J. M. 1979. Fractionation of organio-mineral complexes by sedimentation and density techniques. Geoderma 21:311-343.

Tweneboah, C. K., Greenland, D. J., and Oades, J. M. 1967. Changes in charge characteristics of soils after treatment with 0.5 M calcium chloride pH 1.5. Australian Journal of Soil Research 5:247-261.

Uehara, G. and Gillman, G. 1981. The mineralogy, chemistry and physics of tropical soils with variable charge clays. Westview, Boulder, Colorado. 170 pp.

Vallis, I. and Jones, R. J. 1973. Net mineralization of nitrogen in leaves and leaf litter of *Desmodium intortum* and *Phaseolus atropurpureus* mixed with soil. Soil Biology and Biochemistry 5:391-398.

van Veen, J. A. and Paul, E. A. 1981. Organic C dynamics in grassland soils. I. Background information and computer simulation. Canadian Journal of Soil Science 61:185-201.

van Veen, J. A., Ladd, J. N., and Frissel, M. J. 1984. Modeling C and N turnover through the microbial biomass in soil. Plant and Soil 76:257-274.

Verstraete, W. and Voets, J. P. 1976. Nitrogen mineralization tests and potentials in relation to soil management. Pedologie 26:15-26.

Vitousek, P. M. 1984. Litterfall, nutrient cycling, and nutrient limitation in tropical forests. Ecology 65:285-298.

Vitousek, P. M. and Matson, P. A. 1988. Nitrogen transformations in a range of tropical forest soils. Soil Biology and Biochemistry 20:361-367.

Vitousek, P. M. and Sanford, R. L. 1986. Nutrient cycling in moist tropical forests. Annual Review of Ecology and Systematics 17:137-167.

Vitousek, P. M., Matson, P. A., and Turner, D. R. 1989. Elevational and age gradients in Hawaiian montane rainforest: foliar and soil nutrients. Tropical Mountain Ecosystem Program of the IUBS Decade of the Tropics. In Press.

Vogt, K. A., Grier, C. C., and Vogt, D. J. 1986. Production, turnover, and nutrient dynamics of above- and below-ground detritus of world forests. Advances in Ecological Research 15:303-377.

Vogt, K. A., Edmonds, R. L., Grier, C. C., and Piper, S. R. 1980. Seasonal changes in mycorrhizal and fibrous-textured root biomass in 23- and 180-year-old Pacific silver fir stands in western Washington. Canadian Journal of Forest Research 10:523-529.

Vogt, K. A., Grier, C. C., Meier, C. E., and Edwards, R. L. 1982. Mycorrhizal role in net primary production and nutrient cycling in *Abies amabilis* (Dougl). Forbes ecosystems in western Washington. Ecology 63:370-380.

Volkoff, B. and Cerri, C. C. 1987. Carbon isotope fractionation in subtropical Brazilian grassland soils. Comparison with tropical forest soils. Plant and Soil 102:27-31.

Wada, K. (ed.) 1986. Ando soils in Japan. Kyushu University Press, Fukuoka.

———. 1985. The distinctive properties of Andosols. In: B. A. Stewart (ed.), Advances in soil science, vol. 2. Springer-Verlag, New York.

———. 1980. Mineralogical characteristics of Andisols. In: B. K. G. Theng (ed.), Soils with variable charge. New Zealand Society of Soil Science, Lower Hutt. pp. 87-107.

Wada, K. and Aomine, S. 1973. Soil development on volcanic materials during the Quaternary. Soil Science 116:170-177.

Wada, K. and Higashi, T. 1976. The categories of aluminum and iron humus complexes in ando soils determined by selective dissolution. Journal of Soil Science 27:357-368.

Wade, M. K. and Sanchez, P. A. 1983. Mulching and green manure applications for continuous crop production in the Amazon Basin. Agronomy Journal 75:39-45.

Wagner, G. H. and Mutakar, V. V. 1968. Amino components of soil organic matter formed during humification of ^{14}C-glucose. Soil Science Society of America Proceedings 32:683-686.

Waid, J. S. 1975. Hydroxamic acids in soil systems. Chapter 3, in: E. A. Paul and A. D. McLaren (eds.), Soil biochemistry, vol. 4. Dekker, New York.

Waksman, S. A. 1936. Humus. Williams and Wilkins, Baltimore.

Werger, M. J. A. and Ellenbroek, G. A. 1978. Leaf size and leaf constituence of a riverine forest formation along a climatic gradient. Oecologia (Berlin) 34:297-308.

Wershaw, R. L. 1985. Application of nuclear magnetic resonance spectroscopy for determining functionality in humic substances. In: G. R. Aiken, D. M. McKnight, R. L. Wershaw, and P. MacCarthy (eds.), Humic substances in soil, sediment, and water. Wiley, New York. pp. 561-582.

Wetselaar, R. and Ganry, F. 1982. Nitrogen balance in tropical agroecosystems. In: Y. R. Dommergues and H. G. Diem (eds.), Microbiology of tropical soils and plant productivity. Martinus Nijhoff, Dordrecht, The Netherlands. pp. 1-36.

White, R. E. 1988. Leaching. In: J. R. Wilson (ed.), Advances in nitrogen cycling in agricultural ecosystems. CAB International, Wallingford, U.K. pp. 193-210.

Wielemaker, W. G. 1984. Soil formation by termites: a study in the Kisii area, Kenya. Ph.D. thesis. Agricultural University, Wageningen, The Netherlands.

Wilding, L. P. and Dees, L. R. 1978. Spatial variability: a pedologist's viewpoint. American Society of Agronomy Special Publication 34:1-12. American Society of Agronomy, Madison, Wisconsin.

Wilson, J. R. (ed.) 1988. Advances in nitrogen cycling in agricultural ecosystems. CAB International, Wallingford, U.K.

Wilson, M. A. 1987. NMR techniques and applications in geochemistry and soil chemistry. Pergamon, Oxford. 353 pp.

———. 1981. Application of n.m.r. spectroscopy to the study of soil organic matter. Journal of Soil Science 32:167-186.

Wilson, M. A., Barron, P. F., and Goh, K. M. 1981a. Cross polarisation ^{13}C-N.M.R. spectroscopy of some genetically related New Zealand soils. Journal of Soil Science 32:419-425.

Wilson, M. A., Barron, P. F., and Goh, K. M. 1981b. Differences in structure of organic matter in two soils as demonstrated by ^{13}C cross-polarisation nuclear magnetic resonance spectroscopy with magic angle spinning. Geoderma 26:323-327.

Wilson, M. A., Heng, S., Goh, K. M., Pugmire, R. J., and Grant, D. M. 1983. Studies of litter and acid-insoluble soil organic matter fractions using ^{13}C cross polarization nuclear magnetic resonance spectroscopy with magic angle spinning. Journal of Soil Science 34: 83-97.

Wilson, M. A., Pugmire, R. J., Zilm, K. W., Goh, K. M., Heng, S., and Grant, D. M. 1981c. Cross-polarization ^{13}C-NMR spectroscopy with 'magic-angle' spinning characterizes organic matter in whole soils. Nature 294:648-650.

Wolt, J. and Graveel, J. G. 1986. A rapid routine method for obtaining soil solution using vacuum displacement. Soil Science Society of America Journal 50:602-605.

Wood, T. G. 1988. Termites and the soil environment. Biology and Fertility of Soils 6:228-236.

Wood, T. G., Johnson, R. A., and Anderson, J. M. 1983. Modification of soils in Nigerian savanna by soil-feeding *Cubitermes* (Isoptera, Termitidae). Soil Biology and Biochemistry 15:575-579.

Yamamoto, K., Tate K. R., and Churchman, G. J. 1989. A comparison of the humus substances from some volcanic ash soils in New Zealand and Japan. Soil Science and Plant Nutrition 35. In Press.

Yamamoto, K., Tate, K. R., and Churchman, G. J. 1987. A comparison of the humus in, and humic acids from, some New Zealand and Japanese soils. Laboratory Report BB4. New Zealand Soil Bureau, Lower Hutt. 22 pp.

Yasuhara, K. and Takenaka, H. 1977. Physical and mechanical properties. In: T. Yamanouchi (ed.), Engineering problems of organic soils in Japan. JSSMFE, Tokyo.

Young, A. 1976. Tropical soils and soil survey. Cambridge University Press, Cambridge, England. 322 pp.

Zech, W., Johansson, M.-J., Haumaier, L., and Malcolm, R. L. 1987. CPMAS ^{13}C NMR and IR spectra of spruce and pine litter and of the Klason lignin fraction at different stages of decomposition. Zeitschrift für Pflanzenernahrung und Bodenkunde 150:262-265.

Zech, W., Koegel, I., Zucker, A., and Alt, H. 1985. CP-MAS-^{13}C-NMR-Spektren organischer Lagen einer Tangelrendzina. Zeitschrift für Pflanzenernahrung und Bodenkunde 148:481-488.

Zeikus, J. G. 1981. Lignin metabolism and the carbon cycle: polymer biosynthesis, biodegradation, and environmental recalcitrance. In: M. Alexander (ed.), Advances in microbial ecology. Plenum Press, New York and London. pp. 211-243.

Zucker, W. V. 1983. Tannins: does structure determine function? An ecological perspective. American Naturalist 121: 335-365.

Zunino, H., Borie, F., Aguilera, S., Martin, J. P., and Haider, K. 1982. Decomposition of ^{14}C-labelled glucose, plant and microbial products and phenols in volcanic ash derived soils of Chile. Soil Biology and Biochemistry 14: 37-43.