PN-ABP-319

PRIDE

Project in Development and the Environment

Technology Review, Assessment and Recommendations for Control of Compressor and Blower Systems

February 1993

Submitted to:
USAID/Washington
Submitted by:
PRIDE
AID Contract Number:
ANE-0178-Q-00-1047-00
AID Project Number:
398-1078

Sponsored by:
USAID/NE/DR/ENR
Operated by:
Chemonics International
and its associates

2000 M Street, NW, Suite 200, Washington, DC 20036
Telephone: (202) 331-1860 · Fax: (202) 331-1871

The objective of the Project in Development and the Environment (PRIDE) is to help the U.S. Agency for International Development (AID) design and implement programs that foster the agency's environmental and natural resources strategy for sustainable economic growth in the Near East and Eastern Europe.

PRIDE provides AID and participating countries with advisory assistance, training, and information services in four program areas: (1) strategic planning, (2) environmental policy analysis, (3) private sector and NGO institutional strengthening, and (4) environmental information, education, and communication.

The project is being implemented by a consortium selected through open competition in 1991. Chemonics International is the prime contractor; subcontractors include RCG/Hagler, Bailly, Inc.; Science Applications International Corporation; Capital Systems Group, Inc.; Environomics, Inc.; Industrial Economics, Inc.; Lincoln University; and Resource Management International, Inc. In addition, AID has entered into a cooperative agreement with the World Environment Center to support implementation of PRIDE.

The opinions expressed in this paper are those of the author(s) and do not necessarily reflect the positions of the sponsoring agency or contractors.

Printed on recycled paper

PN-ABP-319

INNOVATION
an engineering firm

Technology Review, Assessment and Recommendations

for

ASKOM Co. Ltd.
Kordeckiego 58
60-144 Poznan, Poland
Tel: (61) 327-590 or (61) 327-853
Telex: 041-3700
Fax: 327-101

INTRODUCTION:

On December 16, 1992, I visited the facilities of ASKOM, a manufacturer of compressor and blower systems located in Poznan with Dr. Kenneth Macek, the PRIDE Warsaw, Poland resident Environmental Business Development Specialist. The purpose of the visit was to review and assess ASKOM's compressor and blower control systems and make technical recommendations for their improvement.

ASSESSMENT:

ASKOM's primary area of expertise is in the manufacturing of blowers and compressors that can be used for the environmental processing of water and air. ASKOM also has the internal resources necessary to provide electrical and mechanical engineering services to develop complete environmental control systems.

ASKOM designs and manufactures 10 to 100 Horsepower (HP), 380 Volt alternating current (VAC) 50 Hertz (HZ) blowers and compressors that are used in treatment plants for the environmental processing of water or air. I did not see an actual operating system as the installed systems were either too far from Poznan or, for various reasons, not available for inspection.

The blower and compressor systems reviewed at ASKOM appear to be of sound design and in conformance with the principles and practices of similar systems used in the United States. ASKOM's existing products are reliable and cost competitive with other European products.

EVALUATION:

The major problem ASKOM is experiencing is in controlling the speed and dynamic configuration of its blowers and compressors.

If ASKOM's systems were designed so that they had the capabilities of changing system control configurations and motor speed they would have several additional environmental applications. If they were designed so that system control configurations and motor speed could be changed dynamically as a result of time, temperature, oxygen content, flow or pressure, they would have other significant industrial applications. I reviewed these potential applications with ASKOM's technical staff.

The applications of ASKOM's products, and therefore its market share, could be increased by:

(1) providing the capability to dynamically change the control system configuration and

(2) providing a means to dynamically control and regulate the speed of blowers and compressors.

These changes would significantly improve the system's effectiveness, reliability, fault tolerance and simplicity of operation.

RECOMMENDATION:

In conversations with ASKOM's engineers (with Dr. Macek and Mr. Wojtek Halkiewicz, an ASKOM mechanical engineer, acting as translators) I suggested that ASKOM develop its own in-house speed and configuration control system design capabilities.

My recommendation was based on the observed technical capabilities of Dr. Wladyslaw Strozyk, Director, Mr. Marian Kostencki, electrical engineer and their staff. ASKOM personnel have the necessary technical experience and background in engineering to acquire these design capabilities in a timely and cost-effective manner. I explained to Dr. Strozyk that if he chose to use consultants outside of ASKOM that specialize in control system design he would have to:

(1) retain consultant services for every blower and compressor control system ASKOM sold;

(2) specify, to each consultant, every detail of the design specifications for each system; and

(3) be responsible for the maintenance, modifications and service of the entire system without control and detail knowledge of the entire system.

Because each system ASKOM produces is unique, continued reliance on consultants is not economically feasible; it would require ASKOM to spend an an inordinate amount of time and money to maintain, modify or repair each system. Every time a site problem occurred, it would be ASKOM's responsibility to determine which element (i.e. blower, compressor or control system) was at fault. ASKOM would then have to contact the control system consultant to find the problem then coordinate the ordering of parts and actual repairs. There would be no way of guaranteeing that the responsible consultant would be available to render follow-up services. The use of recurring long-term consultant services, for this application, would be a very inefficient and costly method of system development.

I believe that the two, most cost-effective, technical areas of improvement for ASKOM would be to develop electronic systems to:

(1) provide fault tolerance and increase capabilities by dynamically changing the control system configuration and

(2) dynamically control and regulate, as a function of input variables such as time, temperature and flow, the speed of blowers and compressors.

These two areas require electrical and mechanical engineering expertise, which ASKOM has, and are cost-effective additions. The methodology and equipment I am recommending is generic, easy to configure and flexible. The equipment is readily available in the United States and Europe.

The equipment is compatible with ASKOM's products and European electrical standards of 380/220 volts AC 50 Hertz, is reliable, simple to operate and easy reconfigured for different systems.

I recommend using "off the shelf" control products and have selected two companies as being the most comprehensive and responsive to ASKOM's needs. I am including catalogs (with United States price lists), instruction manuals, installation guides and operation manuals for ASKOM's consideration. The companies selected to provide control products are: Danfoss, for adjustable speed controls, called Variable Frequency Drives (VFD) and Omron Electronics, for Programmable Logic Controllers (PLC).

The addresses of the recommended companies are:

(1) Danfoss Electronics, Inc.
2995 Eastrock Drive
Rockford, IL 61109 USA
Tel: (815) 398-2770
Fax: (815) 398-2869 or (815) 398-2872
Easy Link 62939612

(2) Danfoss Poland SP. Z.O.O
Ul. Obozowa 20
01-161 Warszawa
Tel: 48 22-32 43 84/ 48 22-32 39 81
Fax: 48 22-32 69 32
Telex: 815777 dfoss
Cable address: Danfoss Poland

(3) Omron Electronics, Inc.
1 East Commerce Drive
Schaumburg, IL 60173 USA
Tel: (312) 843-7900
Fax: (312) 843-8568
TWX: 910-291-0426 OMRONNELEC SHBU

(4) Omron Electronics GMBH.
Oberrather strasse 6, D-4000
Dusseldorf 30
West Germany
Tel: (0211) 65020
Fax: (0211) 6502107
Telex: 8581890

A detailed working design is not possible without knowing site specifics, such as number of blowers or compressors, motor sizes, required speeds, variables to be monitored and configurations. A general design example is setout in figure 4. (Note: There are no figures 1, 2 or 3 for ASKOM applications)

The general design I have developed uses the concept of "one size fits all" modular design--meaning that it uses one standard class of parts (e.g., programmable controller, variable speed drive) that can be reconfigured to different models or versions of a product. It is a common misconception that each model or version of a product must use totally different parts to minimize cost. The theory of this approach is that a company can save money by using, for each componet of a system, the least expensive part capable of performing the necessary function of that component. This approach considers only equipment costs and ignores other costs such as inventory costs, design time costs, documentation costs and maintenance costs.

I have assumed that the control system requires:

(1) one 40 HP motor (Motor 1) operating with variable speed and variable torque;

(2) one 30 HP motor (Motor 2) either not operating or running at one speed;

(3) one 20 HP motor (Motor 3) either not operating or running at one speed;

(4) monitoring and feedback control of a system with these three motors;

(5) the ability to control either Motor 1, Motor 1 and Motor 2 or Motors 1, 2 and 3 depending on the Oxygen content of plant water;

(6) the ability to operate Motor 1, at one speed, if the speed regulator fails or is out of service;

(7) the capability to add sensors and control algorithms with minor modifications;

(8) the ability to be easily reconfigured, in case of failure, to provide a reduced level of control.

Figure 4 is a pictorial diagram of a control system that meets these requirements and consists of:

Controller	**Catalog Page #**	**Cost in US Dollars**
Omron Programmable Logic Controller (PLC) Model C28K-CDR-A	4	$450
8 Bit, 4 input analog module 1-5 Volt, 4-20 ma Part # C4K-AD	5	$465
8 Bit, 1 output analog module 1-5 Volt, 4-20 ma Part # C1K-DA	5	$215
Programming Tools:		
Desk-top/panel mount type with LCD display Part # C200H-PR027-E	7	$275
Programming Port Adapter Part # C500-AP003	7	$75

Controller	Catalog Page #	Cost in US Dollars
Panel Mounting Adapter Part # C200H-ATT01	7	$11
Cable 2 Meter C200H-CN222	7	$52
* Danfoss 30 HP VLT3032 with NEMA 12 (IP 21) enclosue and Multiple Preset control card. * See note below	AC 28	$6,252
VLA 31 multiple Pump controller with relay unit	A64	$1,435
3 contactor bypass (estimated)	Not available	$400
Total system cost including programming tools is:		$9,630

Note: Danfoss variable frequency drives that are used in variable torque mode may operate a one grade higher Horse Power motor than their rating. Example: When operating a 40 HP motor in it's variable torque mode, such as blowers and compressors, ASKOM may use a Danfoss VLT3032 30 HP variable frequency drive (VFD).

The VFD and PLC controller models are chosen on the basis of motor size, operating mode, simplicity of operation, ease of programming, versatility, flexibility and fault tolerance. Additional considerations are, battery backup for program retention, environmental packaging and cost. I would, for ASKOM's applications, always specify NEMA 12 (IP21) environmental enclosures.

This type of fault tolerant design would allow motor 1 operation, multiple motor operation and system reconfiguration whenever there was a failure of either a PLC or VFD controller.

Depending on the sophistication of control, fault tolerance and flexibility required, ASKOM can use any combination of the VFD, PLC, 3 contactor bypass, or VLA 31 multiple pump controller. As shown in figure 4 ASKOM can use either a PLC, VLA 31 or a PLC and VLA 31 for control.

If ASKOM choses to use PLC and VLA controllers in combination it would, at increased cost, improve system reliability, fault tolerance flexibility and maintainability.

The foregoing recommendations are an attempt to convey to readers whose technical backgrounds are unknow an engineering design and implementation methodology using electrical engineering terminology. It was impossible, in the time alloted, for me to investigate and weigh every possible factor that ought to be considered in developing a final, detailed design for a specific system. Therefore, in implementing these design recommendations, it is important to keep in mind that the general design I have recommended is not intended to be a schematic and that the final designs that are developed must take into account the current availability and cost of components, the local operating environments, the level of expertise of available personnel and other factors that I was not in a position to specifically evaluate.

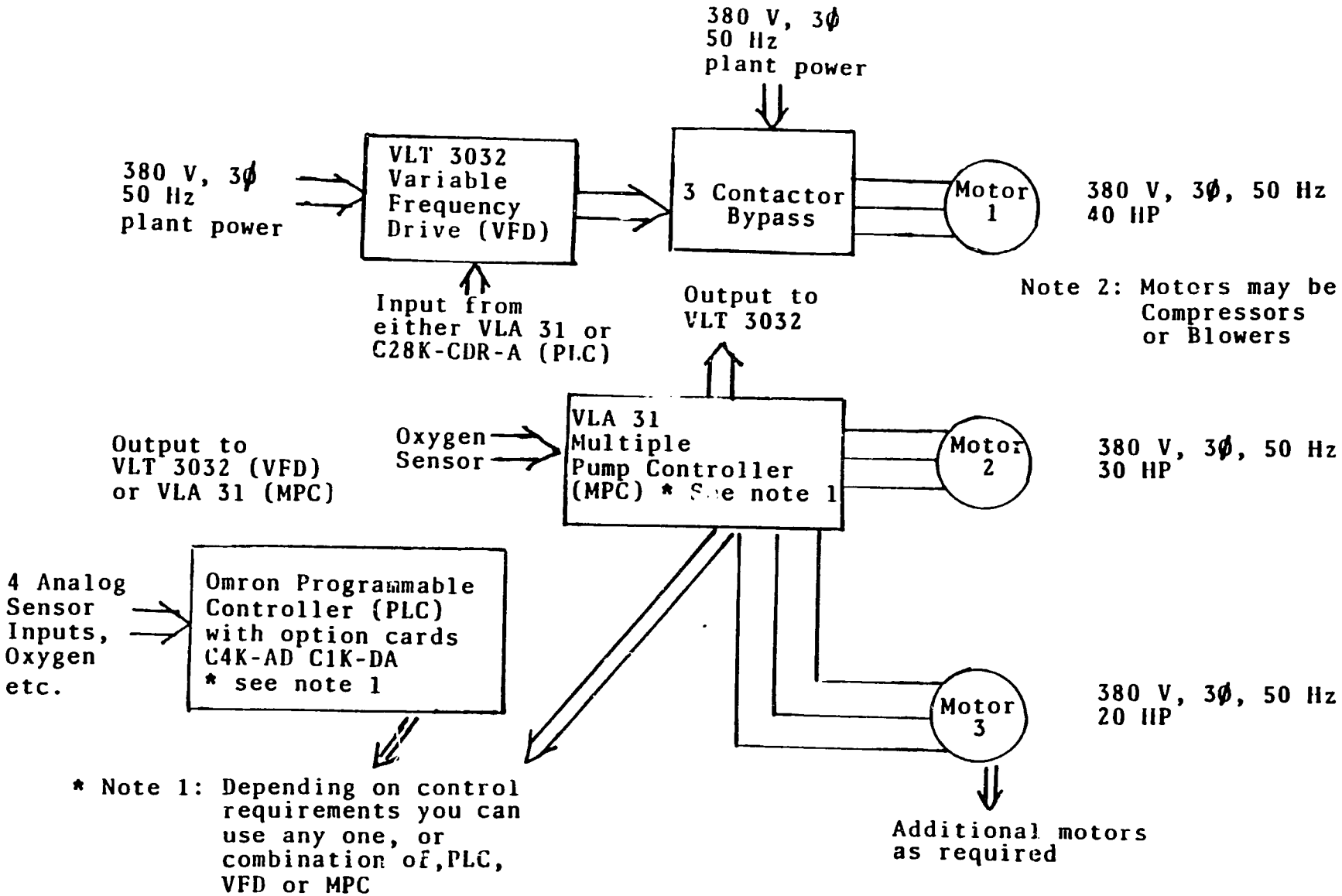

ASKOM MOTOR CONTROL EXAMPLE
Figure 4