PN-ABP-140
ISN 82456

PRIDE

Project in Development and the Environment

Technology Review, Assessment and Recommendations for Polish Environmental Product Manufacturers

February 1993

Submitted to:
USAID/Washington
Submitted by:
PRIDE
AID Contract Number:
ANE-0178-Q-00-1047-00
AID Project Number:
398-1078 3980178

Sponsored by:
USAID/NE/DR/ENR
Operated by:
Chemonics International
and its associates

2000 M Street, NW, Suite 200, Washington, DC 20036
Telephone: (202) 331-1860 · Fax: (202) 331-1871

The objective of the Project in Development and the Environment (PRIDE) is to help the U.S. Agency for International Development (AID) design and implement programs that foster the agency's environmental and natural resources strategy for sustainable economic growth in the Near East and Eastern Europe.

PRIDE provides AID and participating countries with advisory assistance, training, and information services in four program areas: (1) strategic planning, (2) environmental policy analysis, (3) private sector and NGO institutional strengthening, and (4) environmental information, education, and communication.

The project is being implemented by a consortium selected through open competition in 1991. Chemonics International is the prime contractor; subcontractors include RCG/Hagler, Bailly, Inc.; Science Applications International Corporation; Capital Systems Group, Inc.; Environomics, Inc.; Industrial Economics Inc.; Lincoln University; and Resource Management International, Inc. In addition, AID has entered into a cooperative agreement with the World Environment Center to support implementation of PRIDE.

The opinions expressed in this paper are those of the author(s) and do not necessarily reflect the positions of the sponsoring agency or contractors.

Printed on recycled paper

PN-ABP-140

Technology Review, Assessment and Recommendations for Polish Environmental Product Manufacturers

by
Dr. Ron Tolmei

February 1993

TABLE OF CONTENTS

		Page
SECTION I	INTRODUCTION	1
SECTION II	ELCO SP. z o.o.	
	A. Introduction	6
	B. Assessement	6
	C. Evaluation	7
	D. Recommendation	7
SECTION III	PEFO, Ltd.	
	A. Introduction	13
	B. Assessement	13
	C. Evaluation	14
	D. Recommendation	14
SECTION IV	ASKOM Co. Ltd.	
	A. Introduction	20
	B. Assessement	20
	C. Evaluation	21
	D. Recommendation	21

SECTION I
INTRODUCTION

A. INTRODUCTION

On December 4, 1992, on behalf of Innovation, I signed an engineering consulting services agreement with RCG/Hager, Bailly, Inc. The agreement provided that I would:

(1) provide 12 person days of engineering consulting services;

(2) travel to Poland to conduct on-site assessments of product design and manufacturing methods at ELCO, a manufacturer of water filtration systems in Warsaw and ASKOM, a manufacturer of compressors and blowers in Poznan;

(3) evaluate the current designs and reliability of ELCO and ASKOM products;

(4) formulate recommendations for product improvements and discuss the feasibility of implementing those recommendations with the management of these companies and Dr. Kenneth Macek, the PRIDE resident Environmental Business Development Specialist; and

(5) upon returning to the United States, develop and provide to ELCO and ASKOM, through Dr. Macek, conceptual engineering drawings incorporating the agreed upon design changes, if any, and specifications for U.S. components, when appropriate and available.

On December 8, 1992 I left the United States and met Dr. Macek in Warsaw, Poland. Under Dr. Macek's direction, we visited ELCO, PEFO and ASKOM executives who were in charge of product development and manufacturing for these companies. Our key contacts at these companies were:

Mr. Jerzy Gorski, President
ELCO Sp. z o.o.
Ul. Gorczewska 62/64
01-401 Warszawa, Poland
Tel: 360155
Telex: 812299
Fax: 363285

Mr. Wieslaw Gaczynski, General Manager
PEFO, Ltd.
Ul. Dluga 41/47
Pl 53-633 Wroclaw, Poland
Tel: (071) 55 01 75 or 55 02 91 ext. 48
Telex: 0715130
Fax: (071) 55 01 75

Dr. Wladyslaw Strozyk, Director
ASKOM Co. Ltd.
Kordeckiego 58
60-144 Poznan, Poland
Tel: (61) 327-590 or 327-853
Telex: 041-3700
Fax: 327-101

The recommendations that I have made for product improvements and design changes are based in part on my observations concerning constraints imposed on manufacturers by a scarcity of resources and a general lack of technological development in the major Polish industrial centers.

Under Poland's old form of government, the major emphasis of manufacturers was on making quantity and schedule. The primary goal of companies was to produce a certain number of units in a given time period. Reliability, quality, cost or market need for the products were not primary concerns.

With the advent of a market economy, Polish manufacturers must make products that are reliable, cost competitive and technologically compatible with products produced by European and other market oriented economies. This is a difficult task to accomplish because in Poland the internal support mechanisms that are critical to improvement of product designs and manufacturing techniques are in a very primative stage.

For example, to be efficient in the use of technologists' time, cost-effective and competitive, market economy countries routinely use computers to design products. In Poland, computers, and the necessary software to operate them, cannot be purchased "off the shelf." Moreover, there is a lack of technical workers who are trained and experienced in the use of Computer Aided Design (CAD) software.

Furthermore, in Poland one cannot order product subcomponents, such as integrated circuits, transistors, and meters by telephone because these subcomponents are usually not available from Polish companies. Most Polish companies must order these components from European sources outside Poland at a cost that is greater than that paid by foreign competitors. This means that the material costs of Polish manufacturers are greater than those of their foreign counterparts.

Additionally, such items as literature for technical products, text books, manuals and computer software documentation are usually written in German or English, making communication difficult. Although they are being improved, basic communications services, utilities and equipment presently used in Poland--such as telephones, electrical systems, heating systems and air conditioning systems--were not designed for today's high technology equipment. Examples of the problems created by the primitive state of Poland's communications and utilities systems abound: Noise in electrical power lines makes operating computers a difficult, if not impossible, task. It can take up to an hour to make telephone or facsimile (fax) contact with a supplier to order parts or request information.

Therefore, the technological task is to define solutions to manufacturing problems that, given these operating constraints, can be implemented and will yield the maximum benefit for the minimum cost. This will allow a natural technological progression, such as the transition from rotary to touch dialing telephones in the United States. Poland has the internal capabilities to improve technology. What Poland needs is simple, cost-effective improvements in design and technology that will yield immediate results and that can serve as the foundation for further improvements in the future. In other words, what Poland needs is simple solutions to complex problems, not complex solutions to simple problems.

With these concepts in mind, I am pleased to offer technological recommendations that will, when implemented, achieve these goals in an expeditious, realizable and cost-effective manner consistent with the available resources.

The following report evaluates each company's management, technical capabilities, operational constraints, financial strength and makes appropriate recommendations for product improvements. The report recommendations emphasize cost effective solutions that can be implemented within thirty days.

This report includes, for each company evaluated:

(1) an assessment of product design and manufacturing methods;

(2) an evaluation of current product designs, their reliability, maintainability, capabilities for increasing production and fault tolerance (i.e. the ability to withstand failures);

(3) a discusssion of the feasibility of implementing recommendations for product improvements; and

(4) conceptual engineering drawings and specifications incorporating recommended cost-effective design modifications and other changes that could improve product performance, maintainability, reliability and sales.

My recommendations for product improvements are based on a consideration of:

(1) the electrical expertise available at the company;

(2) the intended use of the products;

(3) the technical capabilities of customers and other users;

(4) the financial resources of each company; and

(5) the benefits received versus the costs expended.

My recommendations for specific design changes and components are based on a consideration of:

(1) simplicity of operation: the amount of instruction and procedures needed to operate the system;

(2) reliability: the probability that the system will be operating for a specific time;

(3) fault tolerance: the ability of the system to have a failure in one or more component parts and still operate;

(4) maintainability: the amount of time and effort required to maintain and repair the system;

(5) versatility: the feasibility of using the product for other purposes;

(6) flexibility: the feasibility of reconfiguring the system to perform other functions;

(7) cost: the total cost--in terms of time, labor and equipment costs required to manufacture the system;

(8) environmental packaging: the packaging necessary for the system to operate in an environment of extreme temperatures, water, dust and vibration;

(9) availability of components: the feasibility of purchasing components within specified times, from multiple sources, at reasonable costs.

SECTION II
ELCO

Technology Review, Assessment and Recommendations
for
ELCO Sp. z o.o.
Ul. Gorczewska 62/64
01-401 Warszawa, Poland
Tel: 360155
Telex: 812299
Fax: 363285

A. INTRODUCTION

On December 10, 1992, I visited ELCO, a manufacturer of water filtration systems located in Warszawa, with Dr. Kenneth Macek, the PRIDE Environmental Business Development Specialist for Warszawa. The purpose of the visit was to review and assess ELCO's water filtration systems and make technical recommendations for their improvement.

B. ASSESSMENT

ELCO's primary area of expertise is in environmental science with an emphasis on mechanical engineering.

The equipment that ELCO presently offers for sale is relatively low cost, entirely mechanical and uniquely manufactured for each individual situation.

ELCO is in the early stages of product development and presently has only a few operating systems installed.

The operating equipment that I saw was a four unit water filtration system that is used to remove high concentrations of iron and manganese that can cause water discoloration, staining of fabrics and clogging of pipes. The system uses an aspirator that adds a small amount of air into the water of the pressure tank (see example, figure 1). This small amount of air in the water changes the dissolved iron and manganese, by precipitation, into rust and solid manganese. The rust and solid manganese particles are then filtered from the water in a nonchemical filter bed. The filters are cleaned manually by reversing the direction of water flow (a process called back-washing) approximately fifteen minutes once every two weeks. The procedure is done by manually opening and closing, in sequence, a series of water valves.

The design is technically sound. If the system is periodically cleaned (backwashed), it will function effectively. However, in certain respects, the design is impractical and uneconomic.

According to Jerzy Gorski, ELCO's president, ELCO's systems are manufactured one at a time and each system is unique.

The system that I saw did not have:

(1) operating or maintenance instructions;

(2) any means of identifying valves, or valve positions;

(3) standardized parts;

(4) a means of controlling the back washing proceedure; and

(5) any adjustable way to regulate discharge flow.

C. EVALUATION

The design of the filtration system appears to be sound and in conformance with the principles and practices of similar systems used in the United States. However, the system's effectiveness can be greatly improved by:

(1) automating the cleaning process (backwashing) using electrically operated solenoid valves; and

(2) providing a means to regulate back washing water flow discharge (see figure 1).

This would significantly improve the system's effectiveness, reliability, fault tolerance and simplicity of operation.

D. RECOMMENDATION

In conversations with ELCO's chief scientist, with Dr. Macek acting as a translator, I suggested that the product be redesigned for mass production with an emphasis on cost, maintainability, ease of manufacturing and reliability as design concerns. I also suggested providing maintenance, operating instructions and labeling valves, units, positions and other elements of the system. At a small cost, this would reduce operating problems customers were experiencing with the system. For example, I observed that a problem with bacterial growth that the customer attributed to equipment failure was resolved by an experienced ELCO technician simply cleaning (backwashing) the system properly.

I believe that the two most cost-effective, technical improvements for ELCO would be:

(1) the automatic control of filter cleaning; and

(2) control and regulation of backwashing water flow discharge.

The equipment needed to complete these two improvements is commercially available. They would not require a high level of electrical expertise to develop.

The proposed improvements would be compatible with ELCO's equipment and European electrical standards of 220 volts alternating current (VAC) @ 50 Hertz (HZ). They would be extremely low in cost, reliable, simple to operate and easy reconfigured for different applications.

I recommend using "off the shelf" irrigation products that are available in the United States and Europe and have selected Hardie Irrigation's products as being the most comprehensive and responsive to ELCO's needs. I am including Hardie's United States and international catalogs, with United States price lists, for ELCO's consideration. Hardie Irrigation has three separate locations:

(1) For products with American electrical power standards of 120 Volts, 60 Hertz:

Hardie Irrigation
Turf Products
788 Fairview Drive
Carson City, Nevada 89701-5456 USA
Tel: (800) 634-8873

(2) For products with European electrical power standards of 220 Volts, 50 Hertz:

Hardie Irrigation
International Division
1588 N. Marshall
El Cajon, California 92020 USA
Tel: (619) 562-2950
Fax: (619) 258-7960
Telex: 3719648

(3) Hardie's master distributor in Europe is:

RIS Irrigation (Italy) S. .
Loc Prato Della Corte
Lott Scirocco 00065 Fiano Romano
Roma, Italy
Attention: Mr.Gianni Benna
International Sales Manager
Tel: (39 76 455 201
Fax: 39 76 455 386

A detailed working design is not possible without knowing water pressure, required flow, valve configurations, water quality and other specific site characteristics. However, I have developed a general design, which is depicted in figure 1.

The general design I have developed uses the concept of "one size fits all" modular design--meaning that it uses one standard class of parts (e.g., controller, valves) that can be reconfigured to different models or versions of a product. It is a common misconception that each model or version of a product must use totally different parts to minimize cost. The theory of this approach is that a company can save money by using, for each componet of a system, the least expensive part capable of performing the necessary function of that component. This approach considers equipment costs and ignores other costs such as inventory costs, design time costs, documentation costs and maintenance costs.

For instance, because the design example has only two valve states, a simple double pole double throw (DPDT) relay with a timer, or switch for manual control, could have been used. However, this would not have allowed for modifications; it would have required a separate power supply for the timer, valves and relays or 220 volt equipment, which would, in turn require costly 220 volt wiring. This type of "unique" design for each model or version of a product is very costly, time consuming and inappropriate.

As shown in figure 1, the United States catalog for Hardie Irrigation products, which can be cross referenced to the international parts catalog with 220 Volt 50 Hertz power, provides possible equipment choices. For simplicity I assume that the valves will interface to straight in-line pipe with 1 inch standard National Pipe Tread (NPT) threaded connections.

The controller and valve models that might be used are:

Controller model	page #	cost	Valve model	Catalog page #	cost
TC-6EX	10	$185	2400 TF	18	$24
RD 600EX	11	$143	2400 T	18	$22
446PR	13	$119	HRI-T	19	$25
H-4000-1	14	$60	HRI-TF	19	$27
304PR	15	$105	205-T	21	$22
			205-TF	21	$24
			700130	23	$48
			703130	23	$105
			102130	25	$88
			103130	25	$113
			311A	27	$36

The costs are for single unit retail purchases and the actual purchase prices would be less depending on the quantities purchased. All costs are in U.S. dollars and are for single unit sales.

The choice of a controller for a particular system depends upon the controller's ability to power the required number of valves, simplicity of operation, ease of programming, versatility, flexibility, fault tolerance (shorted valve detection, battery backup), environmental packaging and cost. For this system, I would always specify outdoor self contained power supply configurations.

The choice of valves for a particular system depends upon the required flow rate, water quality and quantity. Valves should be selected based upon their flow control, filtering and pressure regulation capabilities and for ease of cleaning and replacement. Maintainability, available valve configurations, environmental considerations and cost should also be considered.

For example I would choose normally open (N.O) (water can go through when power is not available) valve configurations for valves Z4 & Z7 and normally closed (N.C.) (water cannot go through when power is not available) valve configurations for valves Z3 & Z6. This type of fault tolerant design would allow filtered water to flow to facilities (normal operation) in the event of a valve or controller failure or a loss of electrical power.

If a valve with internal flow control capabilities, such as a 713DPR or 311A on page 26 of the Hardie Irrigation U.S. catalog, is used for valve 6 in figure 1 it will have a flow regulation function and the constant flow regulator can be eliminated. This will significantly reduce total component cost, improve reliability (fewer parts) and improve maintainability (fewer parts to maintain)

The foregoing recommendations are an attempt to convey to readers whose technical backgrounds are unknow an engineering design and implementation methodology using electrical engineering terminology. It was impossible, in the time alloted, for me to investigate and weigh every possible factor that ought to be considered in developing a final, detailed design for a specific system. Therefore, in implementing these design recommendations, it is important to keep in mind that the general design I have recommended is not intended to be a schematic and that the final designs that are developed must take into account the current availability and cost of components, the local operating environments, the level of expertise of available personnel and other factors that I was not in a position to specifically evaluate.

Hardie/Richdel Controller Models

TC-6EX
RD 600EX
446PR
H-4000-1
304PR

Z3 Z4 Z6 Z7

Hardie/Richdel Valve Models

Z3, Z4
Z6, Z7

2400 TF	205-TF
2400 T	700130
HRI-T	703130
HRI-TF	102130
205-T	103130
	311A

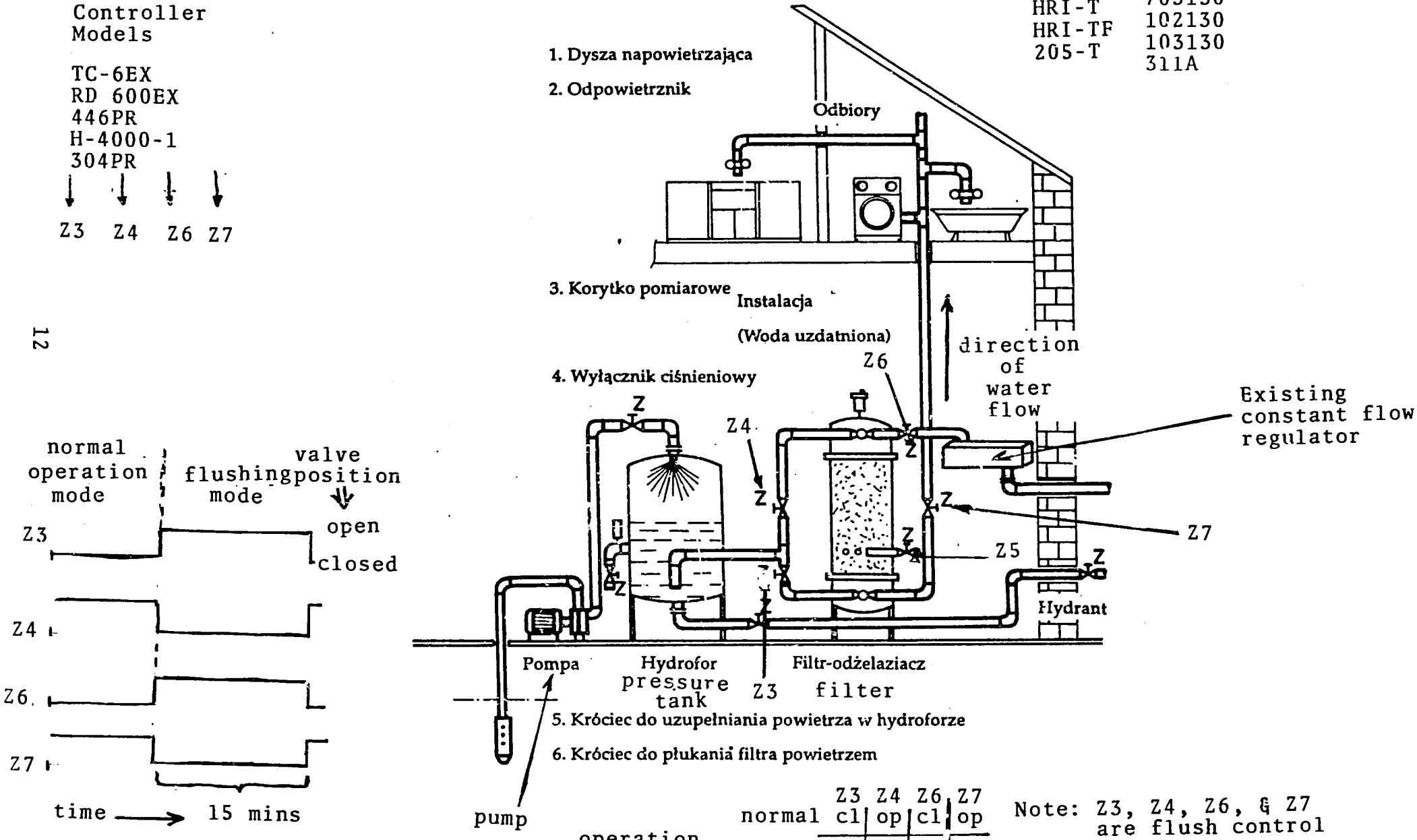

operation

	Z3	Z4	Z6	Z7
normal	cl	op	cl	op
flush	op	cl	op	cl

Note: Z3, Z4, Z6, & Z7 are flush control valves

Figure 1 Elco Example Operation

SECTION III
PEFO

Technology Review, Assessment and Recommendations
for
PEFO, Ltd.
Ul. Dluga 41/47
Pl 53-633 Wroclaw, Poland
Tel: (071) 55 01 75 or 55 02 91 ext. 48
Telex: 0715130
Fax: (071) 55 01 75

A. INTRODUCTION

On December 15, 1992, I visited PEFO Ltd., a manufacturer of air electrostatic filter systems located in Wroclaw, with Dr. Kenneth Macek, the PRIDE Environmental Business Development Specialist for Warszawa. The purpose of the visit was to review and assess PEFO's electrostatic air filtration systems and make technical recommendations for their improvement.

B. ASSESSMENT

PEFO manufactures and installs electrostatic air filtration systems to clean the air of fogs, aerosols and smoke. Each system produced is manufactured one at a time, without automation. The company also provides system design, assembly and maintenance services for ventilation plants.

In conversations with PEFO's general manager, with Dr. Macek acting as a translator, I ascertained that PEFO does sheet metal fabrication, mechanical assembly and machining at its own facilities. It purchases most motors, fans and power supplies and integrates them as modules into the final systems.

The operating equipment that I saw was a portable electrostatic air filtration system used to remove welding, grinding or general machining smoke. The system uses a blower motor, which acts like a vacuum cleaner, and high voltage power supplies that are connected to metallic plates. These plates are mounted in the air path of the vacuum assembly and collect the dust and smoke particles. The plates are housed in a removable assembly approximately 2 feet wide by 2.5 feet high by 3 feet long. The assembly houses the plates and, when removed from the system, does not have any active (hot) electrical components. To clean the system the customer must remove the filter assembly and spray the plates with water.

C. EVALUATION

The filtration system's design appears to be technically sound and in conformance with the principles and practices of similar systems used in the United States.

The system is effective if the filters are periodically cleaned.

PEFO's system does not have the capability to monitor component failures or the effectiveness of the filters.

The system's effectiveness can be greatly improved by:

(1) incorporating a device that will annunciate system failures that affect performance; and

(2) providing a means to quantify filter performance.

This would significantly improve the system's effectiveness, reliability, fault tolerance and simplicity of operation.

D. RECOMMENDATION

I recommended to PEFO's management that the system be modified to display its operating and filter conditions as these directly affect the systems's ability to filter air. I explained that any modifications should be made with an emphasis on cost, maintainability, ease of manufacturing and reliability as design concerns.

I pointed out to Mr. Gaczynski, the general manager, that these small modifications would significantly enhance his products acceptance, and therefore sales, by providing a diagnostic indication that the unit is working properly. Additionally the modifications would, at a small cost, reduce operating problems customers might experience with the system.

For example; If the filter became clogged, the existing system would continue to operate without filtering; the customer would have no way of knowing that the filter was clogged and would simply believe that the unit was not effective. However, if a display were available and appropriately labeled, the customer would know of the problem, call for service and gain confidence with the system.

I believe that the two, most cost-effective, technical areas of improvement for PEFO would be:

(1) to provide a visual means of determining filter status; and

(2) a means of annunciating system failures that affect performance.

These two areas do not require a high level of electrical expertise to implement. The necessary equipment is low in cost, easy to configure, flexible and commercially available.

The products I am recommending are compatible with PEFO's equipment, European electrical standards, are low in cost, reliable, simple to operate and easy reconfigured for different systems.

I recommend using "off the shelf" electrical products that are available in the United States and Europe and have selected Simpson and Allied Electronics products as being the most comprehensive and responsive to PEFO's needs. I am including Simpson's United States catalog, with price lists, and Allied Electronics catalog for PEFO's consideration.

The electrical product companies address' are:

(1) Simpson Electric Company
853 Dundee Avenue
Elgin, Illinois 60120-3090 USA
Tel: (708) 697-2260
Fax: (708) 697 2272

(2) Allied Electronics
International Marketing Dept.
7410 Pebble
Fort Worth, Texas 76118 USA
Tel: (817) 595-3500
Telex: 75-8314

Simpson's master distributor in Europe is:

(3) TET GMBH Elektrotechnik
Bodensee Str. 113
8000 Munchen 60
Attention: Mr. Karl Heim
Tel: (498) 983-9450
Fax: (498) 983-94549

A detailed working design is not possible without knowing system specifics such as voltages, currents and space available for equipment to be mounted. The following design example recommends a visual system status indicator because:

(1) the filter system will most likely be used in a noisy environment;

(2) an audible alarm, with an acceptable sound level and required circuitry, would cost more; and

(3) the circuitry for an audible alarm would require electrical engineering expertise to design.

In reference to figure 2, (Note: There is no figure 1 applicable to PEFO's recommendation) the simplest way to provide a visual means of determining filter status and system failures is to measure and display, by using a meter, the current in the metallic plates. This is easily accomplished by connecting a meter in series with the high voltage lead to the filter's metallic plates.

The meter serves three purposes:

(1) the meter will indicate a low current, thus alerting the operator that something is wrong with the power supply, filter or connections;

(2) the meter will indicate a high current, thus alerting the operator that the filter is most likely clogged; and

(3) the meter will indicate the status of the filter and the amount of dust or smoke collected by the filter.

To select a meter PEFO should use the Simpson or Allied catalogs and choose a panel meter that meets the specific requirements for space, cost and current range. **Important:** PEFO must provide an electrically insulated transparent plastic enclosure completely around the meter such that the meter cannot be touched either inside or outside the filter assembly. This is to protect the operator from high voltage that, without the enclosure, could arc to either the assembly or operator. As shown in the catalogs there are several possible meter choices. For simplicity, I will assume using a Simpson 2.5 inch, 0-500 microampere meter, Model 17424, at $55 each, that is described on page 8 of the Simpson catalog.

PEFO should mount the meter, with its plastic enclosure, on the removable filter chassis assembly so that an operator can clearly see the meter when operating the machine. Then, observing the meter polarity, it should connect the two leads of the microampere meter in series with the 5 KV lead as shown in Figure 2. If cost permits, it should have the meter faceplate color coded for ease of reading by an operator. As an example; Assume that the current is 80 microamperes when the filter is clean and 400 microamperes when it is dirty. If PEFO has the faceplate (see figure 3) painted red between 0 and 50 microamperes, green between 50 and 300, yellow between 300 and 400 and red from 400 to 500 microamperes it will have a system status indicator that is easy to interpret.

The foregoing recommendations are an attempt to convey to readers whose technical backgrounds are unknow an engineering design and implementation methodology using electrical engineering terminology. It was impossible, in the time alloted, for me to investigate and weigh every possible factor that ought to be considered in developing a final, detailed design for a specific system. Therefore, in implementing these design recommendations, it is important to keep in mind that the general design I have recommended is not intended to be a schematic and that the final designs that are developed must take into account the current availability and cost of components, the local operating environments, the level of expertise of available personnel and other factors that I was not in a position to specifically evaluate.

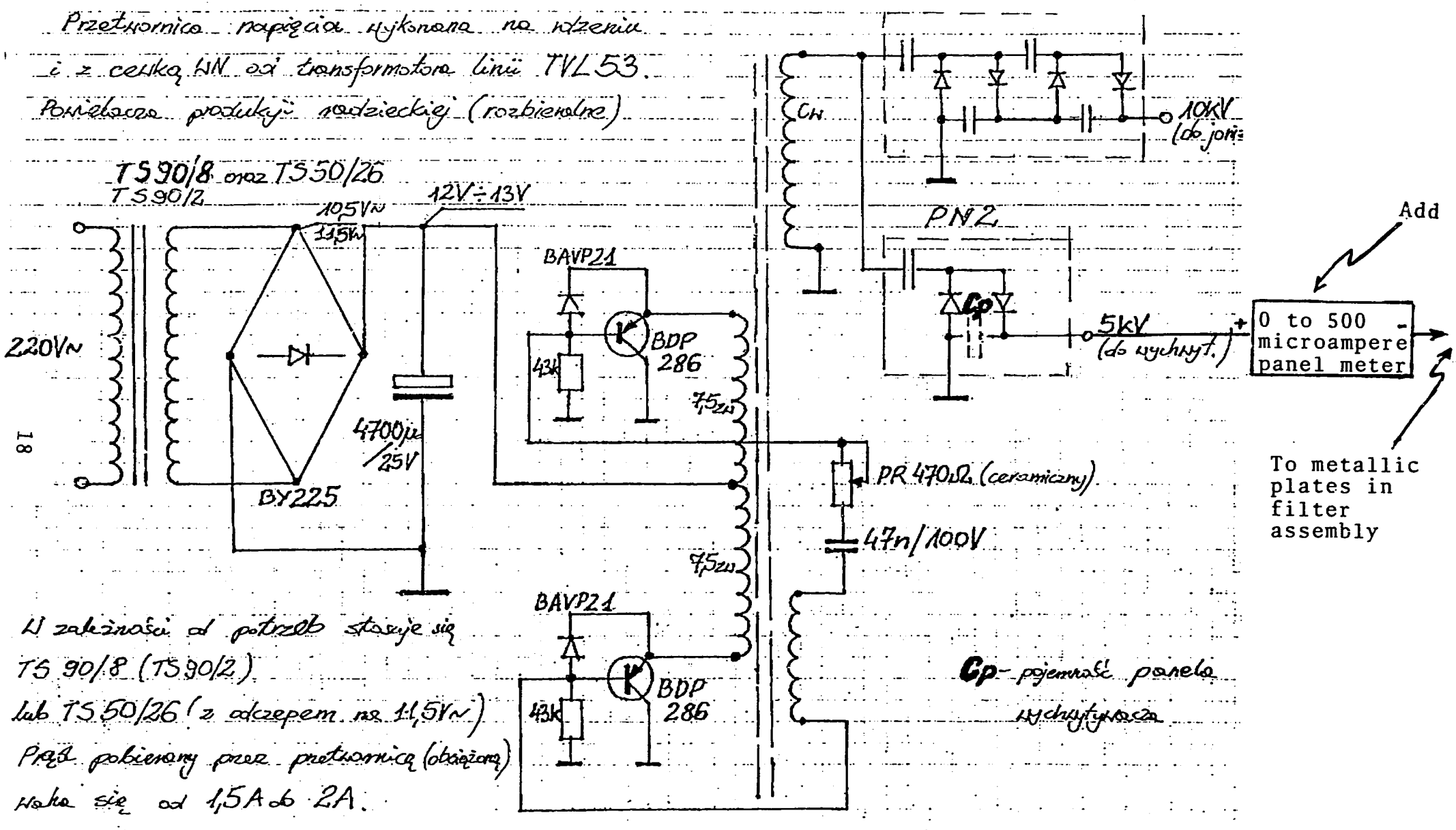

PEFO MODIFICATION

Figure 2

LABEL FRONT PANEL
IN ENGLISH, POLISH
GERMAN ...ETCETERA

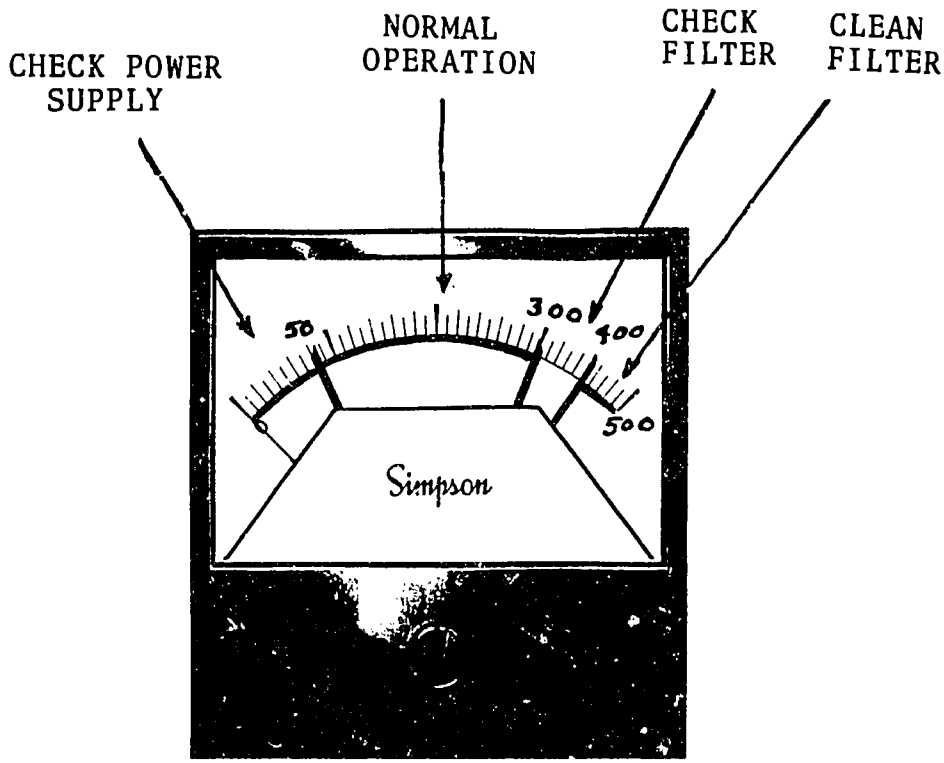

0 TO 500 MICROAMPERE
PANEL METER
STATUS INDICATOR

PEFO MODIFICATION

FIGURE 3

SECTION IV
ASKOM

Technology Review, Assessment and Recommendations
for
ASKOM Co. Ltd.
Kordeckiego 58
60-144 Poznan, Poland
Tel: (61) 327-590 or (61) 327-853
Telex: 041-3700
Fax: 327-101

A. INTRODUCTION

On December 16, 1992, I visited the facilities of ASKOM, a manufacturer of compressor and blower systems located in Poznan with Dr. Kenneth Macek, the PRIDE Warsaw, Poland resident Environmental Business Development Specialist. The purpose of the visit was to review and assess ASKOM's compressor and blower control systems and make technical recommendations for their improvement.

B. ASSESSMENT

ASKOM's primary area of expertise is in the manufacturing of blowers and compressors that can be used for the environmental processing of water and air. ASKOM also has the internal resources necessary to provide electrical and mechanical engineering services to develop complete environmental control systems.

ASKOM designs and manufactures 10 to 100 Horsepower (HP), 380 Volt alternating current (VAC) 50 Hertz (HZ) blowers and compressors that are used in treatment plants for the environmental processing of water or air. I did not see an actual operating system as the installed systems were either too far from Poznan or, for various reasons, not available for inspection.

The blower and compressor systems reviewed at ASKOM appear to be of sound design and in conformance with the principles and practices of similar systems used in the United States. ASKOM's existing products are reliable and cost competitive with other European products.

C. EVALUATION

The major problem ASKOM is experiencing is in controlling the speed and dynamic configuration of its blowers and compressors.

If ASKOM's systems were designed so that they had the capabilities of changing system control configurations and motor speed they would have several additional environmental applications. If they were designed so that system control configurations and motor speed could be changed dynamically as a result of time, temperature, oxygen content, flow or pressure, they would have other significant industrial applications. I reviewed these potential applications with ASKOM's technical staff.

The applications of ASKOM's products, and therefore its market share, could be increased by:

(1) providing the capability to dynamically change the control system configuration and

(2) providing a means to dynamically control and regulate the speed of blowers and compressors.

These changes would significantly improve the system's effectiveness, reliability, fault tolerance and simplicity of operation.

D. RECOMMENDATION

In conversations with ASKOM's engineers (with Dr. Macek and Mr. Wojtek Halkiewicz, an ASKOM mechanical engineer, acting as translators) I suggested that ASKOM develop its own in-house speed and configuration control system design capabilities.

My recommendation was based on the observed technical capabilities of Dr. Wladyslaw Strozyk, Director, Mr. Marian Kostencki, electrical engineer and their staff. ASKOM personnel have the necessary technical experience and background in engineering to acquire these design capabilities in a timely and cost-effective manner. I explained to Dr. Strozyk that if he chose to use consultants outside of ASKOM that specialize in control system design he would have to:

(1) retain consultant services for every blower and compressor control system ASKOM sold;

(2) specify, to each consultant, every detail of the design specifications for each system; and

(3) be responsible for the maintenance, modifications and service of the entire system without control and detail knowledge of the entire system.

Because each system ASKOM produces is unique, continued reliance on consultants is not economically feasible; it would require ASKOM to spend an an inordinate amount of time and money to maintain, modify or repair each system. Every time a site problem occurred, it would be ASKOM's responsibility to determine which element (i.e. blower, compressor or control system) was at fault. ASKOM would then have to contact the control system consultant to find the problem then coordinate the ordering of parts and actual repairs. There would be no way of guaranteeing that the responsible consultant would be available to render follow-up services. The use of recurring long-term consultant services, for this application, would be a very inefficient and costly method of system development.

I believe that the two, most cost-effective, technical areas of improvement for ASKOM would be to develop electronic systems to:

(1) provide fault tolerance and increase capabilities by dynamically changing the control system configuration and

(2) dynamically control and regulate, as a function of input variables such as time, temperature and flow, the speed of blowers and compressors.

These two areas require electrical and mechanical engineering expertise, which ASKOM has, and are cost-effective additions. The methodology and equipment I am recommending is generic, easy to configure and flexible. The equipment is readily available in the United States and Europe.

The equipment is compatible with ASKOM's products and European electrical standards of 380/220 volts AC 50 Hertz, is reliable, simple to operate and easy reconfigured for different systems.

I recommend using "off the shelf" control products and have selected two companies as being the most comprehensive and responsive to ASKOM's needs. I am including catalogs (with United States price lists), instruction manuals, installation guides and operation manuals for ASKOM's consideration. The companies selected to provide control products are: Danfoss, for adjustable speed controls, called Variable Frequency Drives (VFD) and Omron Electronics, for Programmable Logic Controllers (PLC).

The addresses of the recommended companies are:

(1) Danfoss Electronics, Inc.
2995 Eastrock Drive
Rockford, IL 61109 USA
Tel: (815) 398-2770
Fax: (815) 398-2869 or (815) 398-2872
Easy Link 62939612

(2) Danfoss Poland SP. Z.O.O
Ul. Obozowa 20
01-161 Warszawa
Tel: 48 22-32 43 84/ 48 22-32 39 81
Fax: 48 22-32 69 32
Telex: 815777 dfoss
Cable address: Danfoss Poland

(3) Omron Electronics, Inc.
1 East Commerce Drive
Schaumburg, IL 60173 USA
Tel: (312) 843-7900
Fax: (312) 843-8568
TWX: 910-291-0426 OMRONNELEC SHBU

(4) Omron Electronics GMBH.
Oberrather strasse 6, D-4000
Dusseldorf 30
West Germany
Tel: (0211) 65020
Fax: (0211) 6502107
Telex: 8581890

A detailed working design is not possible without knowing site specifics, such as number of blowers or compressors, motor sizes, required speeds, variables to be monitored and configurations. A general design example is setout in figure 4. (Note: There are no figures 1, 2 or 3 for ASKOM applications)

The general design I have developed uses the concept of "one size fits all" modular design--meaning that it uses one standard class of parts (e.g., programmable controller, variable speed drive) that can be reconfigured to different models or versions of a product. It is a common misconception that each model or version of a product must use totally different parts to minimize cost. The theory of this approach is that a company can save money by using, for each componet of a system, the least expensive part capable of performing the necessary function of that component. This approach considers only equipment costs and ignores other costs such as inventory costs, design time costs, documentation costs and maintenance costs.

I have assumed that the control system requires:

(1) one 40 HP motor (Motor 1) operating with variable speed and variable torque;

(2) one 30 HP motor (Motor 2) either not operating or running at one speed;

(3) one 20 HP motor (Motor 3) either not operating or running at one speed;

(4) monitoring and feedback control of a system with these three motors;

(5) the ability to control either Motor 1, Motor 1 and Motor 2 or Motors 1, 2 and 3 depending on the Oxygen content of plant water;

(6) the ability to operate Motor 1, at one speed, if the speed regulator fails or is out of service;

(7) the capability to add sensors and control algorithms with minor modifications;

(8) the ability to be easily reconfigured, in case of failure, to provide a reduced level of control.

Figure 4 is a pictorial diagram of a control system that meets these requirements and consists of:

Controller	**Catalog Page #**	**Cost in US Dollars**
Omron Programmable Logic Controller (PLC) Model C28K-CDR-A	4	$450
8 Bit, 4 input analog module 1-5 Volt, 4-20 ma Part # C4K-AD	5	$465
8 Bit, 1 output analog module 1-5 Volt, 4-20 ma Part # C1K-DA	5	$215
Programming Tools:		
Desk-top/panel mount type with LCD display Part # C200H-PRO27-E	7	$275
Programming Port Adapter Part # C500-AP003	7	$75

Controller	Catalog Page #	Cost in US Dollars
Panel Mounting Adapter Part # C200H-ATT01	7	$11
Cable 2 Meter C200H-CN222	7	$52
* Danfoss 30 HP VLT3032 with NEMA 12 (IP 21) enclosue and Multiple Preset control card. * See note below	AC 28	$6,252
VLA 31 multiple Pump controller with relay unit	A64	$1,435
3 contactor bypass (estimated)	Not available	$400
Total system cost including programming tools is:		$9,630

Note: Danfoss variable frequency drives that are used in variable torque mode may operate a one grade higher Horse Power motor than their rating. Example: When operating a 40 HP motor in it's variable torque mode, such as blowers and compressors, ASKOM may use a Danfoss VLT3032 30 HP variable frequency drive (VFD).

The VFD and PLC controller models are chosen on the basis of motor size, operating mode, simplicity of operation, ease of programming, versatility, flexibility and fault tolerance. Additional considerations are, battery backup for program retention, environmental packaging and cost. I would, for ASKOM's applications, always specify NEMA 12 (IP21) environmental enclosures.

This type of fault tolerant design would allow motor 1 operation, multiple motor operation and system reconfiguration whenever there was a failure of either a PLC or VFD controller.

Depending on the sophistication of control, fault tolerance and flexibility required, ASKOM can use any combination of the VFD, PLC, 3 contactor bypass, or VLA 31 multiple pump controller. As shown in figure 4 ASKOM can use either a PLC, VLA 31 or a PLC and VLA 31 for control.

If ASKOM choses to use PLC and VLA controllers in combination it would, at increased cost, improve system reliability, fault tolerance flexibility and maintainability.

The foregoing recommendations are an attempt to convey to readers whose technical backgrounds are unknow an engineering design and implementation methodology using electrical engineering terminology. It was impossible, in the time alloted, for me to investigate and weigh every possible factor that ought to be considered in developing a final, detailed design for a specific system. Therefore, in implementing these design recommendations, it is important to keep in mind that the general design I have recommended is not intended to be a schematic and that the final designs that are developed must take into account the current availability and cost of components, the local operating environments, the level of expertise of available personnel and other factors that I was not in a position to specifically evaluate.

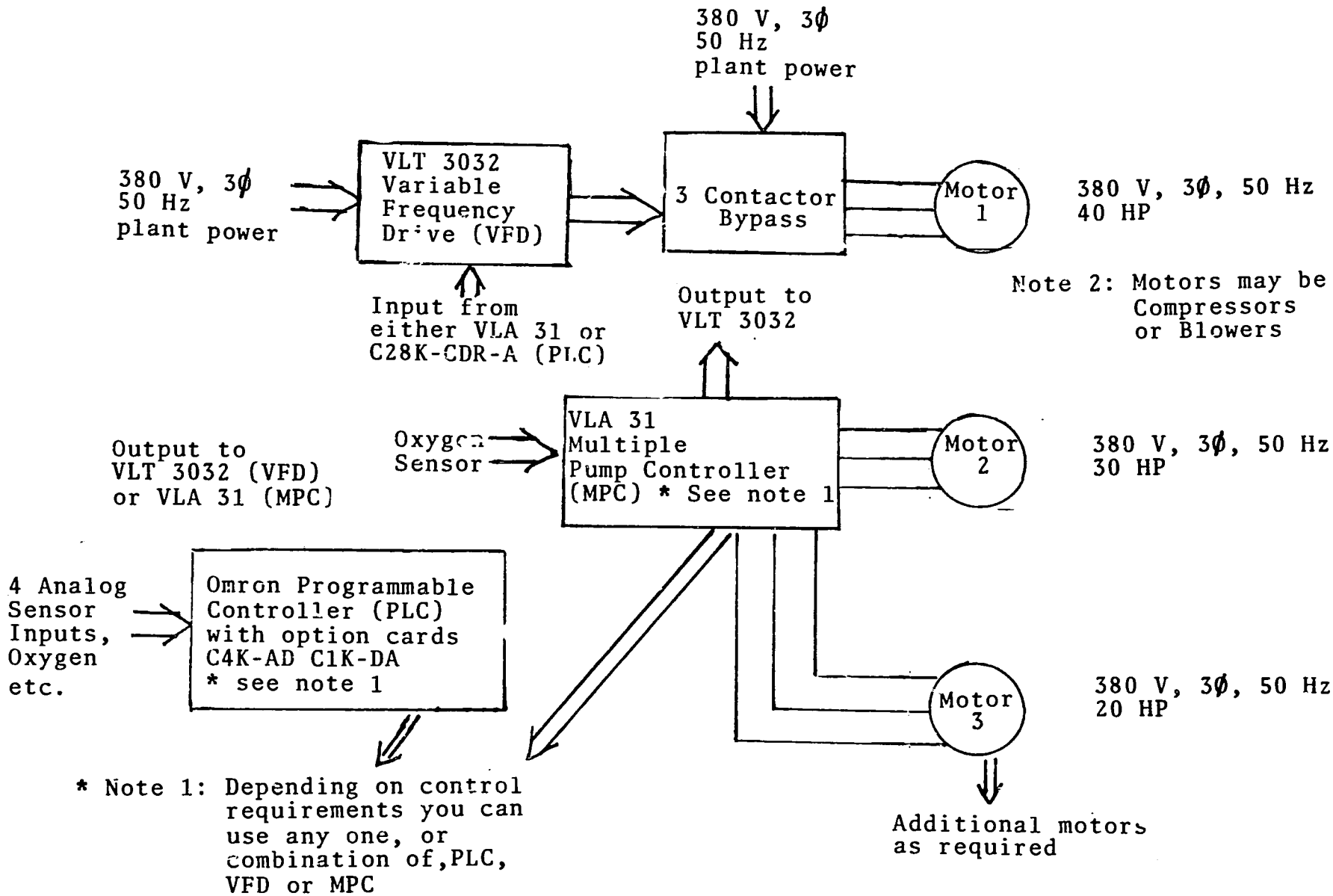

ASKOM MOTOR CONTROL EXAMPLE
Figure 4