PNABN-819

81806

RELIABILITY EVALUATION ANALYSIS MODEL (REM)
USER'S GUIDE

Prepared for:

EGYPTIAN ELECTRICITY AUTHORITY
Cairo, Egypt

HBI Reference No. 90-9215

Prepared by:

RCG/HAGLER, BAILLY, INC.
1530 Wilson Boulevard
Suite 900
Arlington, Virginia 22209-2406
(703) 351-0300

January 1992

Contents

Chapter 1.	Features	1
Chapter 2.	A Guided Tour	3
Chapter 3.	Operation and Suggestions for the Advanced User	12
Appendix A.	Electric Generation Reliability: Review and Approximations	15
Appendix B.	IEEE Benchmark Analysis	22
Appendix C.	Hourly Load Analysis with the LAGG Spreadsheet	23
Appendix D.	Model Code	32

Tables and Figures

Table 1.	Main Features	1
Figure 1.	Initial Spreadsheet	4
Figure 2.	On-Line Help	6
Figure 3.	REM Structure, Environment, and Files	12
Figure A-1.	Available Reserve Distribution and Definition of Generation Reliability Measures	21
Figure B-1.	REM's Speed vs. Accuracy Tradeoff for IEEE System	22
Figure C-1.	LAGG On-Line Help	23
Figure D-1.	1-2-3 Macros for REM	33
Figure D-2.	SRELBAT.BAT Batch File for Running REM	36
Figure D-3.	SREL Fortran Program	37

The software described in this document is furnished under a license agreement or nondisclosure agreement. The software may be used or copied only in accordance with the terms of the agreement.

© Copyright 1991 by RCG/Hagler, Bailly, Inc.
370 L'Enfant Promenade, S.W.
Suite 700
Washington, D.C. 20024
(202) 488-1500

Lotus and 1-2-3 are registered trademarks of Lotus Development Corporation.

Chapter 1 Features

REM is a flexible electric generation reliability model with a Lotus 1-2-3® user interface. Features include:

Reliability Outputs	Loss-of-load expectation or probability (LOLE/LOLP), expected unserved energy (EUE), capacity adjustment to meet reliability criterion, available reserve distribution and optional plot.
Analysis Periods	User-specified (e.g., annual or monthly); number is limited by available memory – up to 126 periods fit in the spreadsheet.
Maximum Number of Generating Unit Forced Outage States	Unlimited except by the spreadsheet[1].
Maximum Number of Loads Per Period	2000[2].
Accuracy	User controllable; no approximation required[2].
Method	Discrete convolution of units and loads (treated as a single, multi-state negative-capacity unit), with compensated rounding to a user-specified step size.
Computer Environment	IBM-compatible microcomputer with Lotus 1-2-3 Release 2.2 or compatible version, math coprocessor[3]; 512K or more bytes of memory preferable.
Model Languages	Lotus 1-2-3 macros, Fortran 77.
Benchmark Speed	50 seconds to run the 32-unit IEEE Reliability Test System with 364 loads on an IBM AT microcomputer (see Appendix B).[4]

Table 1. Main Features

[1] The data for each unit are written as a single string, which 1-2-3 limits to a maximum of 240 characters. The advanced user can bypass this constraint by a small modification to the 1-2-3 code.

[2] The Fortran part of REM allows no more than 2000 states for generating units, loads, and the available reserve distribution, but the code may be recompiled with this parameter increased. Because 1-2-3 spreadsheets have 8192 rows and REM takes loads by row, REM cannot read all hourly loads of a year directly. The companion spreadsheet LAGG (Load/LOLE Aggregator – see Appendix C) allows an hourly load file for a year to be converted to hourly LOLEs.

[3] The math coprocessor requirement can be avoided by recompiling the Fortran code for use without it.

[4] The LAGG spreadsheet converts 8760 hourly loads to LOLE/LOLP in about 2 minutes with this computer, given a peak-load available reserve distribution from a REM analysis.

REM has some special features that set it apart from standard reliability models:

- A customizable spreadsheet interface, convenient for input preparation, input and output reports, and plotting.
- A load uncertainty model.
- Separate peak-load-only reliability results.
- A two-parameter approximation of relative LOLE or EUE vs. load around zero available reserve (for the peak load as well as the full period).
- Quick (three keystroke) plotting of the available reserve distribution.

Features found in some reliability models but not in REM Version 1.2 include:

- Automatic maintenance scheduling (typically designed to levelize some measure of reliability across months or weeks of each year).
- Conversion of chronological loads to load duration curves (typically simplified, with greater accuracy near the peak load).
- Energy limitation modeling (e.g., peak shaving for hydro generation).

These features can be provided manually. For example, maintenance can be reflected by setting capacities in selected periods to 0 or setting all capacities to derated levels.

Chapter 2 A Guided Tour

REM is designed to be largely self-explanatory, and hands-on practice is the quickest way to learn how to use it. All you need is some familiarity with Lotus 1-2-3, DOS (IBM's Disk Operating System), and electric generation reliability. 1-2-3 skills that are assumed include inserting and deleting rows in the spreadsheet, copying ranges, using the GOTO and CALC keys, and invoking macros. The necessary reliability concepts are reviewed in Appendix A.

Starting the Spreadsheet

To set up the model, copy the REM files from your master disk into a DOS directory. The REM files are:

- REM.WK1 – the 1-2-3 model and data spreadsheet, containing a small example,
- SREL.EXE – the compiled Fortran part of the model, and
- SRELBAT.BAT – a small batch file to run the Fortran program.

It's simplest to keep these files in the same directory and start 1-2-3 from this directory, so that 1-2-3 will find the batch and Fortran files in its default directory when running REM. Additional files you should copy are:

- REM-IEEE.WK1 – like REM.WK1, but with benchmark data used for Appendix B, and
- LAGG.WK1 – the 1-2-3 spreadsheet for hourly load-to-LOLE conversion and aggregation, described in Appendix C.

To enter the REM spreadsheet, type as a DOS command:

```
123 -wrem
```

(This starts 1-2-3 and immediately loads REM.WK1 .) You'll see the example spreadsheet of Figure 1. Try the on-line help, which is reproduced in Figure 2.

User's Manual Example
REM (Copyright (c) RCG/Hagler Bailly, Inc., 1991) Version 1.2, 2/91
(For help, press F5 and type "help".)

PERIOD: .....Year 1..... .....Year 2.....

INPUT SECTION

Plant	Units	F.O.R.	Partial Cap.(MW)	Unit Cap.(MW)	Partial Cap.(MW)	Unit Cap.(MW)
Plant 1	12	0.1		10		10
Plant 2	1	0.1		0		10
Plant 3	1	0.05		20		24
partial state		0.02	5		6	
partial state		0.05	10		12	
partial state		0.03	15		18	
Total (to update current pds., press Alt-t)				140		154
Expected Peak Load (MW)				100		120
Reserve Margin (%)				40.00%		28.33%
Load Uncertainty Model: 90% Confidence Increase (%)				0.00%		0.00%

Load Duration Curve:

% of Peak	Cum. % of Time	% of Peak	Cum. % of Time
100.00%	1.00%	100.00%	100.00%
99.00%	2.00%		
98.00%	4.00%		
95.00%	10.00%		
90.00%	20.00%		
80.00%	50.00%		
60.00%	100.00%		

CONTROLS SECTION

Start with period number:	1	A positive integer. Allows skipping first period(s).
End with period number:	126	Allows skipping last period(s). A blank PERIOD name (e.g. in col. D) also stops the run.
Measure (LOLE or EUE):	LOLE	LOLE = loss-of-load expectation (frac); EUE = Expected Unserved Energy (MWh/h in pd.)
Reliability Criterion (-1 for none):	0.002739	Same units as measure. Used to find "Perfect Capacity Over Criterion".
# of System Reserve Probs. to Show:	2000	An integer between 0 and 2000 (the maximum number calculated).
Step Size for System Reserve (MW):	10	A positive integer. Smaller values are more accurate but slower.
Cutoff Prob. for Reserve Dist.:	1.00E-08	Between 0 and 1. Smaller values are more accurate but slower.

RESULTS SECTION (to run model & update results, press Alt-r)
PERIOD: .....Year 1.....

Period Reliability (units of measure)		0.004313		0.058365
Perfect Capacity Over Criterion (MW)		-1		-27
Exponential Approx. Parameters (MW)	NA	NA	NA	NA
Peak Reliability (units of measure)		0.047371		0.058365
Exponential Approx. Parameters (MW)	NA	NA	NA	NA

Available Reserve Distribution:
(set graph ranges with Alt-g)

Rsv.(MW)	Prob.	Rsv.(MW)	Prob.
-51	0.000000	-77	0.000000
-41	0.000001	-67	0.000000
-31	0.000016	-57	0.000005
-21	0.000122	-47	0.000054
-11	0.000726	-37	0.000414
-1	0.003446	-27	0.002495
9	0.013051	-17	0.011800
19	0.039059	-7	0.043595
29	0.090451	3	0.123247
39	0.157136	13	0.253810
49	0.200083	23	0.340892
59	0.196058	33	0.223684
69	0.175577		
79	0.124268		

Figure 1. Initial Spreadsheet

REM (Reliability Evaluation Model) Quick Help

To move quickly around the spreadsheet, use the range names, such as "inputs", "loads", "controls", and "results" (press F5, F3, and F3 again, and select a name). The macro Alt-r (hold down the Alt key and press "r") runs REM. REM works one period at a time, by running (1) a data writer, which writes out the data in the Input and Controls sections to a DOS file ("TEMPIN.DAT"), (2) a Fortran reliability program (SREL, or Single-period RELiability program), and (3) a data reader, which reads the results from another DOS file ("TEMPOUT.DAT"). Warning: the Fortran program requires a math coprocessor in your computer; you can check if it has one with /Worksheet Status. To run the Fortran program separately, e.g. for debugging invalid inputs, use /System and type "srel < tempin.dat".

Within some constraints, you may tailor the spreadsheet without interfering with REM's operation. Be careful not to delete rows with named cells. If you put many formulas in the spreadsheet, set recalculation to Manual (/Worksheet Global Recalculation Manual), or else REM (in particular, the data writer) will be slowed down.

In the input section, unit partial capacities and load "Cum. % of Time" values should be in ascending order, and "% of Peak" values should be in descending order. The data writer looks for a blank F.O.R. (forced outage rate) to signal the end of the plants (it does not look at the plant name field), and a blank "% of Peak" to signal the end of the load duration curve points. Therefore, don't leave blank rows within these subsections. The data writer also looks for the Expected Peak Load and Load Uncertainty data, but you may modify other rows such as the total capacity.

In the Results section, you may insert rows above the Available Reserve Distribution subsection, e.g. to provide LOLE in hours per year by multiplying by 8760. The exponential approximation parameters are fitted from the reserve distribution in the neighborhood of 0 reserve, if possible, and are set to NA otherwise. The two parameters, m and s respectively, are those of the cumulative reserve distribution approximation:

LOLE exp[r/m - (r/s)**2]

which may be interpreted as LOLE as a function of constant load increment r; or if the EUE measure is selected,

EUE exp[r/m - (r/s)**2].

If you get a "Memory Full" error during a REM run, you can reset the mode indicator at the top right of the screen by pressing Alt-c. Turning off UNDO will free up a lot of memory.

Figure 2. On-Line Help

Exploring the Spreadsheet

The REM spreadsheet has sections for inputs, controls (which are special inputs), and results, as well as macros for running the model. A 1-2-3 range name labels the start of each section, so you can move to it quickly no matter how large the spreadsheet becomes. Explore these labels by pressing the GOTO key followed by the NAME key twice, and selecting from the resulting list. The most useful labels are INPUTS, LOADS, CONTROLS, and RESULTS. (The names beginning with a special character are for use by REM's macros.)

Analysis Periods

The spreadsheet uses two columns per period, starting with the fourth column (D). This allows up to 126 periods within the width of a 1-2-3 spreadsheet. The example analysis covers two periods, labeled `Year 1` and `Year 2`. REM analyzes periods sequentially until it finds an empty cell in the first of a pair of period columns, in the row labeled "PERIOD:" (near the top of Figure 1). (You can also limit the analysis periods with controls shown below). Therefore, your periods must be labeled in sequential even-numbered columns (D, F, etc.), as in the example.

Plants and Peak Load

The example shows three plants, of which the first has 12 units, for a total of 14 units. REM assumes that all units at a plant have the same capacity and forced outage data. In year 1, Plant 3 has a full forced outage rate (FOR) of .05, and three partial FORs: .02 at 5 MW, .05 at 10 MW, and .03 at 15 MW. Therefore its full capacity of 20 MW is available .85 of the time (1-.05-.02-.05-.03). REM's reliability calculations assume that partial capacities are in ascending order, as illustrated.

Plant 2 is not in operation in year 1, indicated by its 0 capacity. In year 2, both the full and the partial capacities of Plant 3 increase by 20%. The total capacity in Year 1 is 140 megawatts (MW), giving a reserve margin of 40% (reserve margin is defined as capacity over load, minus 1, expressed in percent). The total capacity for the current periods (set in the Controls section of the spreadsheet) is totaled for you by the macro Alt-t. To test it, erase the total capacity for either year and press Alt-t; the total should be restored after a moment. (Note that the CMD status indicator at the bottom of the screen is on while any macro is running.) Next, press the CALC key to ensure up-to-date reserve margins, which depend through formulas on the total capacities and the expected peak loads.

You may enter non-integer capacities and peak loads, but REM will use rounded, integer copies of them for the reliability calculations. Capacities should be non-negative, with one exception allowed: you may put in a negative-capacity unit with a zero FOR (and no partial FORs). This is useful for quickly simulating a base (constant) load increase.

To add or remove plants, it's easiest to use /Worksheet Insert Row or /Worksheet Delete Row. A blank row, or more precisely a blank FOR, signals the end of the plant data to REM (the plant name column is ignored). Therefore you mustn't leave any blank rows between plants. Also, a blank partial capacity cell under a filled cell indicates the end of a list of partial capacities. (Note that the first row for any plant has a blank partial capacity.)

Load Duration Curve

Move down to the "`Load Duration Curve`" data and note that in Year 1 the curve has seven points, most of which are near the peak, where accuracy is needed the most in reliability analysis. Of course, a realistic annual or monthly load duration curve would have many more points. In Year 2, only the 100% point is used because only peak-load reliability is desired.

Just as partial capacities must be in ascending order, the load duration curve values (modeled as negative capacities) must be in descending order. The "`Cum. % of Time`" data must be in ascending order ending at 100%, since these are cumulative. REM looks for a blank "`% of Peak`" to signal the end of the loads.

Load Uncertainty Model

Above the load duration curve, you can specify a simple load uncertainty model which gives a Gaussian (normal, or bell-shaped) distribution about the given loads. The distribution has zero expected value (mean), so that the loads you provide represent expected values. You specify only the "`90% Confidence Increase`": the load increase such that there is a 90% probability of a smaller load and a 10% probability of a higher one. (The 90% point is about 1.3 standard deviations above the mean for a Gaussian distribution. The 10% point is the same distance below the mean.) You enter this increase as a percent of the period expected peak load, and all loads in the period are assumed to have the same standard deviation, in megawatt rather than percentage terms. (Though a standard deviation that varies with the load might be somewhat more realistic, it would make REM run much more slowly.) As an example, an expected peak load of 100 MW and

a 90% Confidence Increase of 5% imply a 90% probability that each load is no more than 5 MW higher than the value given.

REM accepts only discrete data, whereas the Gaussian distribution is continuous. Therefore REM discretizes the load uncertainty distribution into 11 points, by a "moment matching" technique.[5]

Controls

The next section, CONTROLS, contains explanations to the right of each control (see Figure 1). The initial values in the spreadsheet make good starting points. These values make REM calculate LOLE and apply a criterion of 1 day in 1 year (1/365). Figure B-1 in Appendix B illustrates how the `Step Size` control trades off speed and accuracy.

Results

Having reviewed all inputs, you're ready to run the model. Doing so updates the next section of the spreadsheet, RESULTS. To ensure that your run changes some results from those already there, you may want to change a control such as "`Reliability Criterion`," which affects the "`Perfect Capacity over Criterion`" results.

Press Alt-r to run REM. The mode indicator at the top of the screen tells you what's happening. Assuming all goes well, you will see the new results for both periods after a few seconds. To see a graph of the available reserve distribution for the last period analyzed (year 2), press Alt-g followed by Enter. LOLE is the sum of the probabilities (really, the sum of expectations, as explained in Appendix A) to the left of 0 reserve, and the Perfect Capacity over Criterion is the reserve where the cumulative probability just equals the criterion (positive or negative). You can verify the Perfect Capacity over Criterion by adding a plant with the negative of this amount of capacity and with zero FOR, i.e., perfect capacity. The resulting Perfect Capacity over Criterion should be 0.

Returning to the RESULTS section, note that the peak reliability (reliability at the peak load) is worse than the period reliability, which is an average for all loads provided. The exponential approximation parameters are NA (not available), because the approximation is valid only when the number of states is large enough and the available reserve distribution is smooth enough. When

[5] A reference for moment-matching discretization is A.C. Miller and T. R. Rice, "Discrete Approximations of Probability Distributions," *Management Science*, Vol. 29, No. 3, March 1983.

available, the parameters provide an approximation of the cumulative of the reserve distribution, which you graphed, in the neighborhood of zero reserve. This is useful for sensitivity analyses. Appendix A has more information about the approximation and the reliability measures.

Tailoring the Spreadsheet

You may tailor the spreadsheet for input preparation, reporting, or other purposes, as long as you don't move or delete the range names that REM looks for (which you saw in "Exploring the Spreadsheet"), and don't put extra rows or columns within input data ranges. REM assumes that plant data start two rows below the "`Plant`" header and end when a row has a blank FOR cell; and the load duration curve data start three rows below the "`Load Duration Curve:`" label and end when a row has a blank "`% of Peak`" cell. REM puts the output reserve distributions two rows below the "`Available Reserve Distribution:`" label.

REM's reliability calculation ignores data such as plant names, total capacity, and reserve margin; you can modify or remove these without harm. REM looks for the row for writing each result by means of a range name. Therefore, for example, you can insert rows labeled "`LOLE (hours/year)`" with formulas converting REM's fractional LOLEs into hours/year, above or below the rows with the REM results.

Saving Your Work

The REM spreadsheet contains the spreadsheet part of the model as well as your data. For your convenience in tailoring the spreadsheet, none of the cells is protected. In case you accidentally damage the model (e.g. by deleting a cell with a needed range name), be careful not to overwrite the master copy of the spreadsheet. It's advisable to save your modified spreadsheets under different names than REM.WK1.

Some Tips When There's an Error

REM Version 1.2 doesn't check its inputs for validity, so it's up to you to do so. For example, if partial capacities for a plant are not in ascending order, REM will calculate invalid results. (A check for this kind of problem is that the sum of the available reserve distribution probabilities is 1, as it should be.)

One of the more common errors is "`Memory Full`". REM tries to report any error in the indicator message at the top right of the screen and then restore the indicator, but in the case of the Memory Full error, it cannot do so. To restore the indicator, press Alt-c ("c" stands for "clean"). Turning off the UNDO feature often removes the memory deficiency. Though UNDO is very convenient for most spreadsheet work, foregoing it is not a loss during REM runs because UNDO can't undo a REM run (due to 1-2-3 limitation when a call to DOS is made, in this case to run the Fortran reliability program). Another, more sophisticated technique for catching errors is to review the file that the spreadsheet macros write for input to the Fortran program, as discussed in the next chapter.

Chapter 3 Operation and Suggestions for the Advanced User

As the run-time indicator messages suggest, REM loops over the periods, with three main steps per period:

1. Prepare an input file for the Fortran reliability program, SREL.
2. Run SREL.
3. Read the file of results from SREL.

Figure 2 shows these steps as well as the relationships of the programs and files.

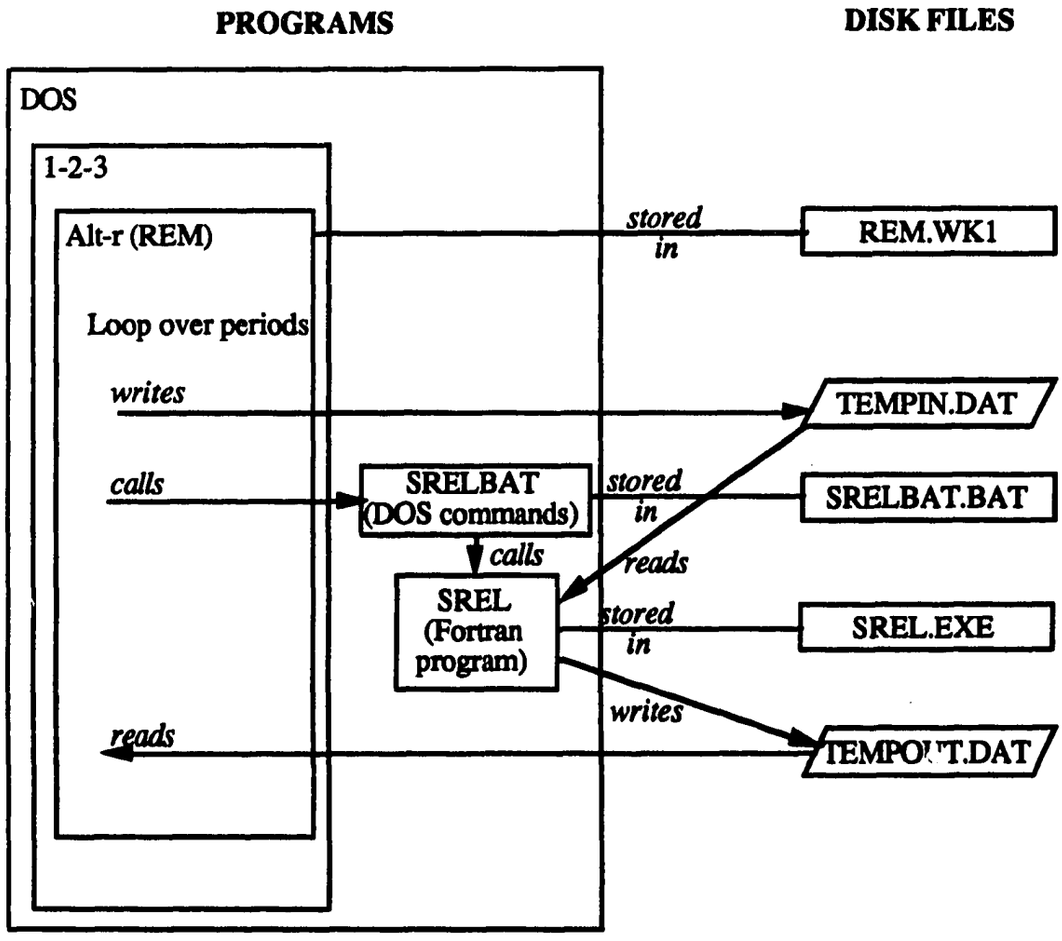

Figure 3. REM Structure, Environment, and Files

The spreadsheet data writer and data reader macros (listed in Appendix D) may be edited by the advanced user for special purposes. In addition, with the help of the SREL documentation in Appendix D, the TEMPIN.DAT FORTRAN input file may be tailored and SREL may be run directly. SREL is a general-purpose, single-period reliability program with some capabilities not exploited by REM. The 1-2-3 command to exit to DOS temporarily is /System. The DOS command to run SREL, with input from TEMPIN.DAT and output directed to TEMPOUT.DAT, is:

```
srel < tempin.dat > tempout.dat
```

To return to 1-2-3, type

```
exit
```

The main operation of SREL is to construct the distribution of available system reserve, i.e. available system capacity minus load (first for the peak load only, and then for all loads in the period). Reliability measures are easy to calculate from this distribution (see Appendix A). The distribution is built by iteratively combining the probability distributions for the capacity of each generating unit. The combination process, which is the probabilistic equivalent of addition, is called convolution. The negative of the load distribution is then convolved with the system capacity distribution.

The essence of convolution is the following conditional probability expansion: the probability of a system reserve level r after an addition is the sum over the addition's states of the state probability times the former system reserve level which would result in level r. Symbolically, if the addition has states c_i with probabilities p_i,

$$P(r \text{ given addition}) = \sum_i p_i \, P(r - c_i) \ .$$

Textbooks detailing reliability evaluation methods are available[6].

---

[6] One of several references is J. Endrenyi, *Reliability Modeling in Power Systems* (Chichester, U.K., Wiley, 1978).

Before convolving capacity and load distributions, SREL rounds each state to a multiple of the step size control (initially 10 MW), and adjusts a total "perfect" (deterministic) reserve for the roundoff error. The step size can be set as small as 1 MW, which eliminates the rounding. However, the Fortran memory limits may be exceeded and the Fortran run time may become unacceptably high. Figure B-1 illustrates the speed vs. accuracy tradeoff provided by the step size.

Chapter 3. Operation and Suggestions for the Advanced User

Appendix A Electric Generation Reliability: Review and Approximations

Probability and its Properties

The *probability* of an event A, P(A), may be thought of as the long-run average frequency that A would occur, in an experiment repeated an infinite number of times. Properties of probability include:

- Its range is 0 to 1 inclusive.
- The sum of the probabilities over any set of "mutually exclusive" (not overlapping) and "collectively exhaustive" (covering all possibilities) events is 1.
- P(A or B) = P(A) + P(B) - P(A and B). Note that if A and B are mutually exclusive (not to be confused with "independent"), then the last term is 0 and P(A or B) is just P(A) + P(B).
- P(A and B) = P(A) P(B given A) = P(B) P(A given B). Note that if A and B are independent, the "givens" can be dropped so that P(A and B) is just P(A) P(B).

Example: Reliability of a Combined Cycle Power Plant

A particular combined cycle power plant consists of two gas turbines (GTs) and a steam turbine (ST). The GTs each provide 10 MW of power, with independent forced outage rates (FORs), or failure probabilities, of .1. The ST also provides 10 MW with a .1 FOR, but since it is powered by steam heated by the GTs' exhaust, its output falls to 5 MW if one of the GTs is forced out, and 0 MW if both are forced out. What is the probability distribution of the total plant capacity?

First, find the capacity distribution for the GTs together, using a probability tree (for each branch, the associated capacity is shown above the branch and the probability is shown below it):

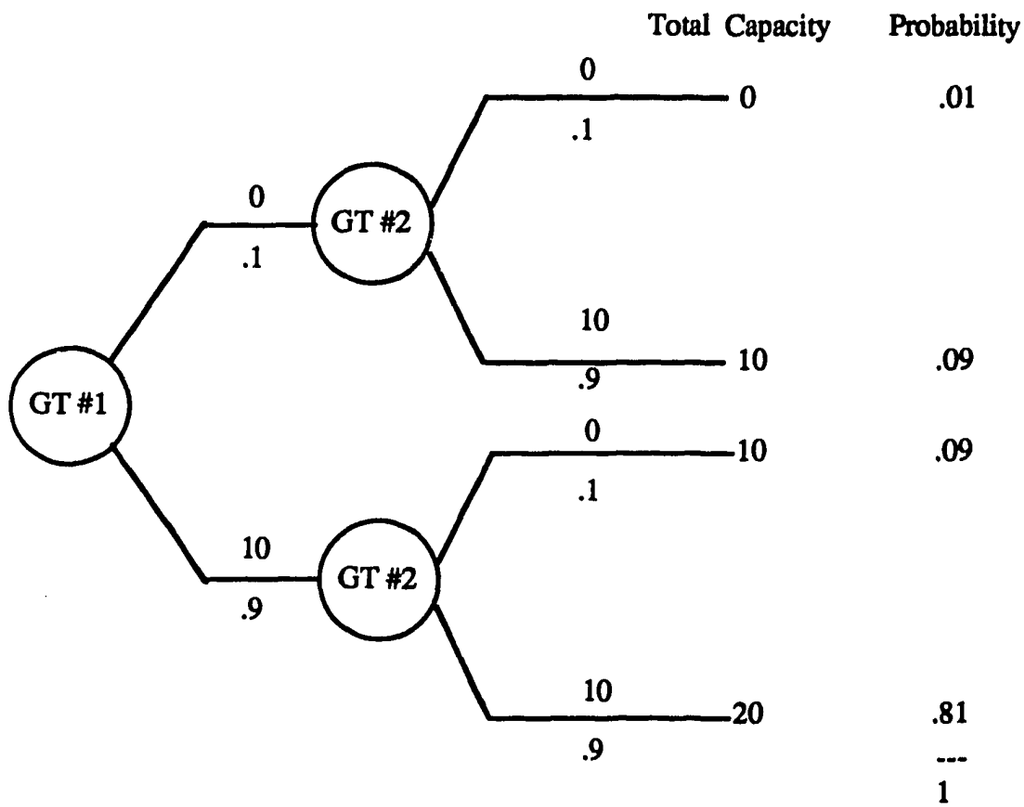

Then, make a probability tree for the ST capacity given the capacity of the GTs together:

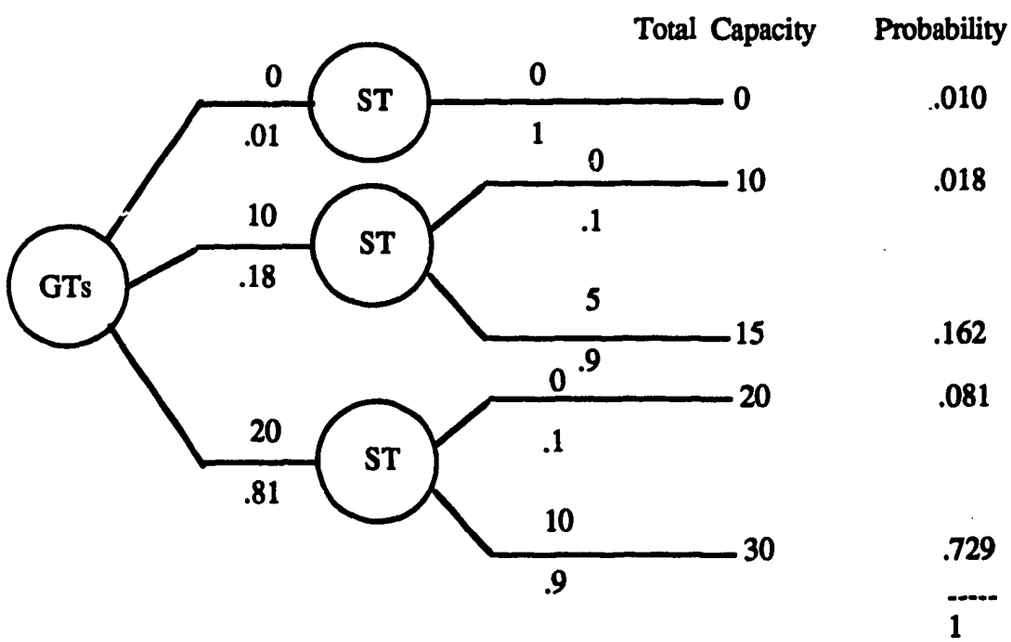

Therefore the plant has a full FOR of .01 and three partial FORs, as shown above. Note that if all three component units had independent capacities, the full FOR would have been only .001 (.1 x .1 x .1).

Expectation vs. Probability

A *random variable* is a variable that can take on different values with associated probabilities. The possible values constitute mutually exclusive, collectively exhaustive events. The *expectation*, or expected value, of a random variable X, E(X), is the sum (or integral) of these values weighted by their respective probabilities. Properties of expectation include:

- Its range is not restricted in general. (However, if the random variable is always between 0 and 1; e.g., if it is a fraction of time, then expectation must also be between 0 and 1.)

- E(X + Y) = E(X) + E(Y). Compare P(A or B), which may be less than P(A) + P(B).

Any probability can be interpreted as an expectation: the expected number of events, 0 or 1, that would occur in a single trial. For example, P(head on next coin flip) = E(number of heads on next coin flip) = 1/2. But an expectation cannot in general be interpreted as a probability, e.g. if it is not between 0 and 1.

Loss-of-Load Probability (LOLP) vs. Loss-of-Load Expectation (LOLE)

"Loss of load" (LOL) means load in excess of available capacity, resulting in a negative reserve. For one point in time, t:

LOLP = P(LOL at t),

LOLE = E(number of LOL events, 0 or 1, at t).

Over a year (for example):

LOLE = LOLE in hour 1 + ... + LOLE in hour 8760
= LOLP at hour 1 + ... + LOLP at hour 8760.

What about LOLP over a year? Probabilities such as P(1 or more LOL events over a year) and P(exactly 1 LOL event in a year) are very difficult to calculate, because they require information indicating how long LOL events might last. Unfortunately, the term "LOLP" is often used to refer to annual LOLE, in hours, divided by 8760 hours (resulting in a quantity between 0 and 1). It is possible to interpret this quantity as P(LOL at a randomly selected hour of the year), but it is a good idea to think of this quantity as a scaled LOLE rather than as a probability. Similarly, think of a criterion such as 1 day (24 hours) per year or per 10 years as an LOLE criterion, not an LOLP criterion.

Example Calculation of Loss-of-Load Probability (LOLP), Loss-of-Load Expectation (LOLE), and Expected Unserved Energy (EUE)

Period:	1 year with 8760 hours.
Generation System:	2 10 MW units, each with a 10% FOR.
Loads:	15 MW in all hours.

First, calculate the distribution of available reserve, by adding each unit to an initialized empty system, and then adding the negative of the loads, treated like a negative-capacity generating unit:

Initialized empty system = 0 MW with probability 1.

+ first unit = $\begin{cases} \text{0 MW with probability .1} \\ \text{10 MW with probability .9} \end{cases}$.

+ second unit = $\begin{cases} \text{0 MW with probability .01} \\ \text{10 MW with probability .18} \\ \text{20 MW with probability .81} \end{cases}$.

+ negative of loads = $\begin{cases} \text{-15 MW with probability .01} \\ \text{-5 MW with probability .18} \\ \text{5 MW with probability .81} \end{cases}$.

Next, calculate reliability measures from this distribution:

LOLE = expected duration of negative reserve
= .01 + .18 = .19 year/year
= .19 x 8760 hours/year = 1664.4 hours/year.

LOLP = probability of negative reserve
= .19

EUE = expected negative reserve x period length
= [(.01) 15 MW + (.18) 5 MW] x 8760 hours/year
= 9198 MWh/year.

Approximations of Reliability vs. Reserve Function

For a generating system with a large number of units, the probability distribution of available reserve typically is somewhat bell-shaped, and the curve around 0 reserve rises almost exponentially (see Figure A-1). This property of the curve allows a simple approximation of LOLE and EUE as a function of added load or capacity. LOLE as a function of added load is the same function as the cumulative distribution of reserve, F(r), because both represent the expected fraction of time that the reserve is less than a given value. A simple approximation of this function in the region around 0 reserve is:

$$F(r) = \text{LOLE} \exp(r/m)$$

where m is a system characteristic, with capacity units such as MW. EUE can be approximated similarly, because it is an integral of LOLE (see Figure A-1), and the integral of an exponential function is still exponential. The parameter m can be estimated from:

$$m = \frac{1}{\ln F(r)'}$$

where the prime denotes derivative, as you can verify by taking the derivative of ln F(r).

A more accurate approximation of F(r) uses a second system characteristic, "s", in addition to "m" to recognize that F(r) grows slower than exponentially:

$$F(r) = \text{LOLE} \exp\left[\frac{r}{m} - \left(\frac{r}{s}\right)^2\right]$$

Like m, s has capacity units. This approximation can be valid only for:

$$r \ll \frac{s^2}{2m}$$

because $\frac{s^2}{2m}$ maximizes this approximation, whereas F(r) must be nondecreasing with r. The parameter s can be estimated from

$$s = \sqrt{\frac{-2}{\ln F(r)''}}$$

and m can be estimated as before near r = 0, as you can verify by taking the first two derivatives of ln F(r).

Applications of Approximations

These approximations can be used to estimate quickly, without a reliability model analysis, quantities such as the load-carrying capability of a generating unit (not discussed here) and the hourly contributions of demand or generation to the total period reliability. Applications of the latter are time-of-use electricity pricing and evaluating time-dependent generation such as solar and wind power. Though the first approximation is adequate for estimating load-carrying capability, the greater accuracy of the second is worthwhile for estimating hourly LOLE. An example comparison is shown below, for m = 100 MW and s = 500 MW.

		.....LOLE Relative to Peak LOLE.....	
Load	r = Load-Peak	Simple Approx.	Improved Approx.
5000	0	1	1
4900	-100	.368	.353
4500	-500	.00674	.00248

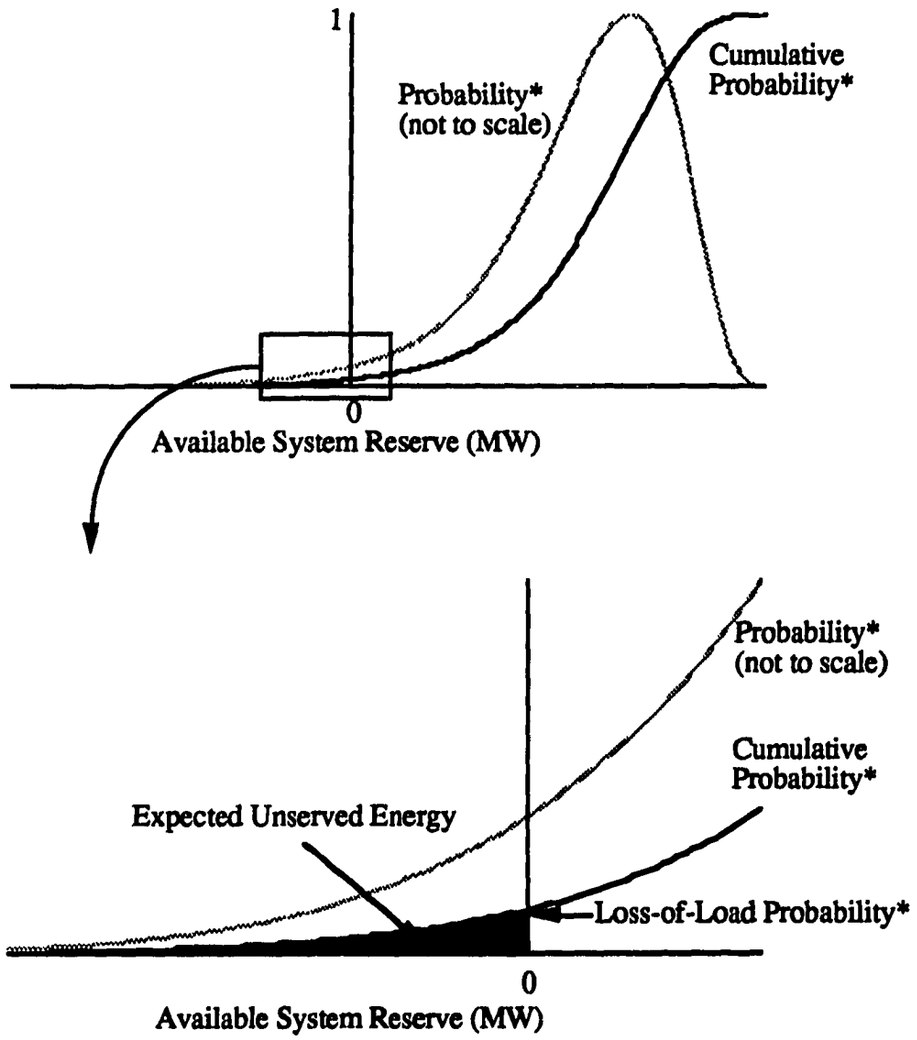

* For a period rather than a point in time, "probability" becomes "expected fraction of time" and "loss-of-load probability" becomes "loss-of-load expectation".

Figure A-1. Available Reserve Distribution and Definition of Generation Reliability Measures

Appendix B IEEE Benchmark Analysis

The spreadsheet REM-IEEE.WK1 contains an analysis of the 32-unit IEEE Reliability Test System with 364 daily peak loads.[7] Except for the step size, default values were used for the controls. The "exact" LOLE according to the second reference differs slightly from that of a REM run with a one MW step size, probably because of a difference in the rounding of small probabilities to 0. Figure B-1 shows both "exact" results and REM's results for varying step size settings, and corresponding run times on an IBM AT Model 339 microcomputer (8 Mhz) with a math coprocessor. The Fortran part of REM typically takes a small fraction of the total run time.

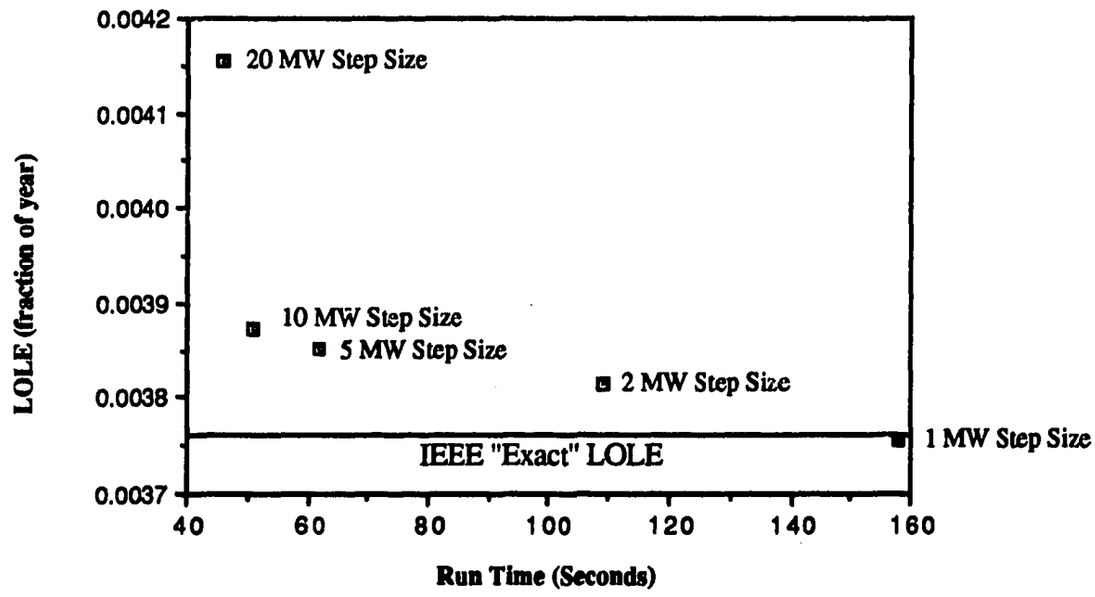

Figure B-1. REM's Speed vs. Accuracy Tradeoff for IEEE System

---

[7] See:
Reliability Test System Task Force, "IEEE Reliability Test System." *IEEE Transactions on Power Apparatus and Systems*, Vol. PAS-98, No. 6, Nov./Dec. 1979.
R.N. Allan, R. Billinton, and N.M.K. Abdel-Gawad, "The IEEE Reliability Test System – Extensions to and Evaluation of the Generating System." *IEEE Transactions on Power Systems*, Vol. PWRS-1, No. 4, November 1986.

Appendix C Hourly Load Analysis with the LAGG Spreadsheet

The LAGG (Load/LOLE Aggregator) spreadsheet may be used in conjunction with REM to calculate LOLEs by hour and to aggregate these. If the available capacity distribution for the system is assumed not to change over a year, LAGG provides annual LOLE based on hourly loads. Seasonal, day-of-week, hour-of-day, and other aggregations of the hourly LOLEs are easy to make. LAGG is intended to be tailored by the user; an example with weekday vs. weekend and monthly aggregations is provided in the initial spreadsheet. LAGG's documentation is stored in the spreadsheet and is reproduced in Figure C-1. *

```
      Hourly Load & LOLE Aggregation Spreadsheet (V1.1, 2/91)

This spreadsheet converts hourly loads to hourly LOLEs and aggregates
them various ways, which you can tailor.  It has four main sections of
data and a macro section, each labeled for quick access with the F5 key:

Label      Section
-----      -------
HOURLY     8760 or 8784 hourly loads or LOLEs.  Use Alt-i to import
           (combine) hourly loads from another 123 spreadsheet (see
           example here for format).  Use Alt-c to convert each load to
           an LOLE (this requires patience!). Before you do so, you can
           aggregate the loads just like LOLEs.
DIST       Cumulative distribution of available system reserve at the
           annual peak, for negative reserves.  Needed for converting
           loads to LOLEs.  You must prepare it, e.g. by importing a
           non-cumulative peak (not period) reserve distribution from a
           REM (Reliability Evaluation Model) spreadsheet and
           accumulating probabilities.  An initial example is provided.
WEEKENDS   Copy of hourly data (LOLEs or loads) for weekends only (you
           should tailor this for your needs). Update with Alt-w.
AGGS       Various aggregations of LOLE or loads, using formulas which
           you must provide.  Update aggregations with F9 (CALC).
MACROS     The macros referred to above.
```

Figure C-1. LAGG On-line Help

* To print the LAGG macros, load the LAGG spreadsheet, go to the MACROS label as described in the on-line help, and use the 1-2-3 Print command. Please note that much of LAGG works by 1-2-3 formulas, not just macros.

The initial LAGG spreasheet extracts Saturdays and Sundays as weekends. The user can tailor it to extract Fridays instead.

The following guide provides instructions for using LAGG together with REM, for the purpose of determining reliability in each hour of a future year and in user-defined aggregations of these hours.

Though this guide provides step-by-step instructions, please note that to use LAGG effectively you should be proficient in Lotus 1-2-3. This is because LAGG gives you direct control over the way hourly reliability is aggregated, and you must tailor the spreadsheet much more than when using *REM* alone.

The periods formed by the LAGG aggregations can represent trial tariff periods for rate design. For example, weekday afternoons might form the peak period, weekday mornings and evenings the shoulder period, and nights and weekends the off-peak period. By varying the hours assigned to each period, you can experiment with different tariff designs and compare their contributions to aggregate loss-of-load expectation (LOLE).

LAGG works with REM to produce LOLEs for each hour of a year. These represent the expected fraction of each hour that load would be lost (not met by the available capacity). An aggregation, or sum, of hourly LOLEs over a period represents the expected duration in hours that load would be lost in the period. This duration can be interpreted as the expected duration within the period that a small increment in the load, constant over the period, would cause loss of load. Therefore, relative period LOLEs can be interpreted as relative marginal costs of additional load. This is the basis for using relative period LOLEs to allocate marginal capacity cost to periods in tariff design.

This guide explains the process of calculating hourly and period LOLEs in four steps. Each is described in a separate section. The first two steps set up and run *REM*, and the remaining steps set up and run LAGG.

Step 1. Create or Update *REM* Generation Data

Chapter 2 described in detail how to describe a generation system in the REM spreadsheet. Here, two simple examples of updates to a *REM* generation system, the example system in Chapter 2, are provided.

Example 1: Adding a Plant

Suppose a new plant, "Plant 4", is to be added to the system shown in Figure 1 of the manual. It consists of a single unit with a 10% forced outage rate and a capacity of 20 MW, in both Year 1 and Year 2. Start the *REM* example spreadsheet, e.g. by the DOS command

```
123 -wrem
```

Then using 1-2-3 commands, go to the blank row underneath the last plant (above the row labeled "Total"), and insert a new row. (Note that 1-2-3 inserts rows *above* the current row.) On the new row, enter in columns A through C the data: `Plant 4`, `1`, and `.01`, then skip a column, enter `20` in column E, skip another column and enter `20` again in column G. The skipped columns are for partial capacities, which are not needed here, and the second `20` is for the second period, Year 2.

Now update the total system capacity by pressing Alt-t. The totals should increase by 20 MW in each year.

Example 2: Adding a Partial Forced Outage Rate

Suppose Plant 2 is to be given a partial forced outage rate of 5% at 2 MW partial capacity, while retaining its 10% full forced outage rate. This means that on the average, 10% of the time Plant 2 is fully forced out, an additional 5% of the time only 2 MW are available, and the remaining 85% of the time all 10 MW are available. First, go to the row *below* the row labeled "Plant 2" and insert a row. In the first column, enter `"partial state` if you like (this is not required). Skip a column, and enter `.05` in column C. Enter `2` in column D, and again in column F (skipping column E). You may want to check now that the total system capacity is unchanged, by pressing [Alt]-[t] and while watching the total system capacity.

Step 2. Run *REM* for Use with LAGG

LAGG will determine reliability for each hourly load of a year. Therefore, *REM* needs to be run with the annual peak load only; the remaining loads will be applied later with LAGG. In the *REM* spreadsheet, put the desired peak load on the row "`Expected Peak Load`" and then provide a one-point load duration curve: set the first "`% of Peak`" and "`Cum. % of Time`" both to 100%, and ensure the cells directly underneath these two cells are blank.

Example

The example in Figure 1 of the manual illustrates in Year 2 a one-point load duration curve, for the peak load only. However, Year 1 in the example has several points in the load duration curve, so this period cannot be used with LAGG as it stands. Therefore, to use the example spreadsheet with LAGG, move down to the controls section and change the start period number from 1 to 2, before running *REM*.

LAGG requires a system available reserve distribution in order to calculate LOLE for each hourly load. Therefore, be sure the control for "`# of System Reserve Probs. to Show`" is set to a large number, such as the default of 2000. Then run *REM* (press Alt-r).

Step 3. Set up the LAGG Spreadsheet

The next steps use a different spreadsheet, so you must save the *REM* spreadsheet and retrieve the new one. Save your *REM* spreadsheet, preferably with a name other than `REM.WK1`, to leave the original spreadsheet unchanged. Before proceeding to retrieve the LAGG spreadsheet, you need to note the range of the peak-load available reserve distribution which you created, because you will import this into LAGG. This range contains two columns: the columns for the year you were analyzing. The rows of the range start with the row with the first (most negative) value for "`Rsv.(MW)`" and end with the row with the first positive value for "`Rsv.(MW)`". (The rest of the distribution, for larger positive reserves, could be included too but will not be needed.)

Example

In the initial *REM* spreadsheet, in Year 2, the range needed is `F59..G67`. The first positive reserve, in cell `F67`, is 3 MW. If you inserted new rows as in the examples in Step 1, the row numbers would be increased accordingly.

Now retrieve `LAGG.WK1`, using the `/File Retrieve` command. Depending on your computer's memory size, you may also want to turn off the UNDO feature now, because the hourly LOLEs will require a large amount of memory. You can check your remaining memory with the `/Worksheet Status` command.

Setting up LAGG requires four sub-steps:

A. Import (combine) and accumulate the available reserve distribution,
B. Import the hourly loads,
C. Tailor the definition of weekends if necessary, and
D. Tailor the aggregation formulas if necessary.

These sub-steps may be done in any order, but this order will be used here.

Sub-Step A: Import Available Reserve Distribution

To import the available reserve distribution, first go to the `DIST` label (using the [F5] and [F3] keys), and note the example distribution there, including the "`Cum.Prb.`" column which is computed by formulas. Then erase the example distribution except for the first row. To do this, go to the second row of the distribution, cell `BA6`, and use the commands `/Range Erase` [End] [↓] [End] [→] [Enter]. Then import the new distribution with `/File Combine Copy Named/Specified-Range` (then give the range you noted in Step 2, and the name of the REM spreadsheet, such as `REM.WK1`).

Now, accumulate probabilities in the "`Cum.Prb.`" column. To do this, copy the formula in cell `BC5` down through the last row of the available reserve distribution. The distribution is now ready. You may want to check that the cumulative probability that you created for the last negative reserve, which is the probability that the available reserve is negative, is the same as the peak LOLE that REM computed.

Sub-Step B: Import Hourly Loads

Before importing the hourly loads, it's a good idea to save the spreadsheet (with a name other than `LAGG.WK1`). The load file which you will import will be assumed to have the following format:

- 3 header rows,
- Loads for the first month:
  in each row, the day of the year in a 1-2-3 date format in column A, followed by 24 hourly loads in columns B through Y (the first month need not be January, but if not, the aggregation formulas described below will need to be updated),
- 4 blank rows* (at least column B must be blank),
- Loads for the second month,
- 4 blank rows*

...

- Loads for the twelfth month.

---

* 1 to 3 blank rows between months are acceptable also, if the LAGG aggregation formulas are adjusted accordingly. If the year has the leap day, 29 February, then use at most three blank rows after February, as illustrated in the initial LAGG spreadsheet. This ensures that any load file has the same number of rows (412 rows).

To import a load file, press [Alt]-[i] and specify the name of the load file. When the importing is complete, check that the loads occupy cells A30 to Y441 in the correct format.

Sub-Step C: Review Weekend Definition

Next, review and tailor as needed the "weekends" used for the aggregations. Go to the WEEKENDS label. The section below it contains rows for the weekend days, copied from the hourly loads. Note the default definition of weekends in the formula in cell A448. It specifies weekends of Saturday and Sunday for the /Data Query command, which is invoked automatically when you update the weekend data with [Alt]-[w] (as the screen instructs). You can modify the formula defining weekends to apply to Fridays only, for example. Then press [Alt]-[w].

Sub-Step D: Review Aggregation Formulas

Finally, go to the AGGS label and look at the formulas, which are under the month headers Jan, Feb, etc. and hours-of-the-day 1am, 2am, etc. Ensure the ranges for these formulas are correct. In particular, if the load file is not for a calendar year (January to December), the month labels and ranges should be updated. You may want to add new aggregations, for example to determine the total contribution of certain hours of a day which constitute a peak period.

A special feature of LAGG is that it aggregates and plots either loads or LOLEs. You can test the aggregations for the loads now, just by pressing [F9]. You should see the annual peak load and load factor, and monthly and hourly energy load percentages. Press [F10] for a plot of the average load by hour-of-day, with the weekday/weekend breakdown.

Step 4. Create and Aggregate LOLEs with LAGG

The last step is easy. You are ready to convert each hourly load to an LOLE. First, make sure you have plenty of memory left, and save the spreadsheet in case you want to start over. Then press [Alt]-[c] to start the conversion. The process takes about 80 seconds on an IBM AT with a math coprocessor. You will hear a beep after each month is converted.

Then press [Alt]-[w] to update the weekend data, [F9] to update the aggregations, and [F10] to plot the results. You should find that the LOLEs are very sensitive to the load: only a few hours of the day contribute almost all of the average day's LOLE. Such hours are appropriate for the peak period in tariff design. Similarly, for some systems only a few months of the year contribute almost all of the annual LOLE.

Appendix D Model Code

REM's code consists of 1-2-3 macros, which are shown in Figure D-1; a small batch file, shown in Figure D-2; and the Fortran SREL program, which is shown except for some subroutine code in Figure D-3. The comments in SREL will help the advanced user to run it as a stand-alone program.

MACROS

```
\r        {onerror _cleanerr,%temp}  *** RUNS REM ***
          {paneloff}{windowsoff}
          {let %pd,startpd}          (start here for debugging)
__dopds   {goto}periods~{r 2*%pd+1}
          {if @cellpointer("type")="b"}{let %pd,%pd-1}{goto}results~{r
             2*%pd+1}{branch __done}
          {_write1}                  write data for one period
          {_run1}                    find reliability for period
          {_read1}                   read results for period
          {if %pd<endpd}{let %pd,%pd+1}{branch __dopds}
__done    {beep 3}{calc}             remove CALC message

_write1   {indicate +"REM: Preparing Inputs for Period "&@string(%pd,0)}
          {open "tempin.dat",w}{beep}
          {contents %temp,cutoff}
          {writeln @string(stepsz,0)&" "&%temp&@if(measure="LOLE"," 0 -1 5
             0","1 -1 5 0")}
          {goto}plants~{d 2}{r 2}    to first "F.O.R." field
          {_writeus}                 write data for all units
          {goto}peaks~{r 2*%pd+2}
          {let %pk,@cellpointer("contents")}
          {writeln +"1 "&@string(-%pk,0)}     write (neg.) peak load only
          {_writelu}{writeln "0"}
          {contents %temp,cutoff}{contents %temp2,crit}
          {writeln +"0 "&%temp&@if(measure="LOLE"," 0 "," 1 ")&%temp2&" 5
             "&@string(show,0)}
          {_writels}{writeln "0"}            write (neg.) lds. as sens'y
          {close}
          {indicate}

_run1     {system +"srelbat tempin.dat tempout.dat Finding Reliability for
             Period "&@string(%pd,0)&" ..."}

_read1    {indicate +"REM: Preparing Results for Period "&@string(%pd,0)}
          {goto}%pkrel~/re{end}{d}{r 3}~
          /fintempout.dat~
          {if @cell("type",%coc)<>"v"}{let %temp,"Error in Fortran--output will
             be shown"}/re{end}{d}{r 3}~/fittempout.dat~{_cleanerr}{quit}
          {goto}pkrels~{r 2*%pd+2}{let @cellpointer("address"),%pkrel}
          {goto}pkparms~{r 2*%pd+1}/c%pkparms~~        (2 cells)
          {if @cellpointer("contents")=0}{let
             @cellpointer("address"),@na}{r}{let @cellpointer("address"),@na}
          {goto}rels~{r 2*%pd+2}{let @cellpointer("address"),%rel}
          {goto}parms~{r 2*%pd+1}/c%parms~~            (2 cells)
          {if @cellpointer("contents")=0}{let
             @cellpointer("address"),@na}{r}{let @cellpointer("address"),@na}
          {goto}cocs~{r 2*%pd+2}{let @cellpointer("address"),%coc}
          {goto}dists~{d 2}{r 2*%pd+1}
          {if @cellpointer("type")<>"b"}/re{end}{d}{r}~
          {if show=0}{branch __donepd}
          {let %where,@cellpointer("address")}
          {goto}%rel~{d}/m{end}{d}{r}~{%where}  (moving dist. is faster than
             copying)
__donepd  {goto}results~{r 2*%pd+1}{beep 3}{windowson}{windowsoff}
          {indicate}
```

Appendix D. Model Code

```
_writeus {if @cellpointer("type")="b"}{return}        start at "F.O.R." field
         {r 2*%pd}          to full cap. field
         {if @cellpointer("contents")=0}{l}{_to0}{l 2*%pd-1}{branch _writeus}
         {l}                to partial cap. field
         {let %temp,1}
__ploop  {let %temp,1+%temp}
         {d}
         {if @cellpointer("contents")<>0}{branch __ploop}
         {let %string,@string(%temp,0)&" 0"}
         {u %temp-2}        to first partial cap. if any
         {for %count,2,%temp-1,1,_appld0}
         {u %temp-1}{r}              to full capacity field
         {let %string,%string&" "&@string(@cellpointer("contents"),0)}
         {l 2*%pd}          to FOR field.  Next line allows neg. cap. w/0 FOR.
         {if @cellpointer("contents")=0#and#%temp=2}{let
            %string,@replace(%string,0,3,"1")}{branch __tou}
         {for %count,1,%temp-1,1,_appld}{u %temp-1}
__tou    {l}                to #units field
         {for %unit,1,@cellpointer("contents"),1,_writeu}
         {r}{d}             to next unit's FOR field
         {branch _writeus}

_appld   {let %temp2,@cellpointer("contents")}
         {contents %temp2,%temp2}
         {let %string,%string&" "&%temp2}
         {d}

_appld0  {let %string,%string&" "&@string(@cellpointer("contents"),0)}
         {d}


_writeu  {writeln %string}
         {return}

_writels {goto}loads~{d 4}{r 2*%pd+1}        to 2nd % load
         {if @cellpointer("type")="b"}{return}        peak-only case
         {u}{let %count,@cellpointer("row")}
         {end}{d}{let %count,@cellpointer("row")-%count+1}
         {writeln @string(%count,0)}
         {goto}loads~{d 3}{r 2*%pd+1}        to first % load
         {for %temp,1,%count,1,_writel}
         {goto}loads~{d 3}{r 2*%pd+2}        to first prob.
         {let %prob,0}
         {for %temp,1,%count-1,1,_writep}    (omit last prob.)
         {return}
_writel  {writeln @string((1-@cellpointer("contents"))*%pk,0)}
         {d}
         {return}
_writep  {let %prob,@cellpointer("contents")-%prob}
         {contents %prob,%prob}{writeln %prob}
         {let %prob,@cellpointer("contents")}
         {d}

_writelu {goto}loaduncs~{r 2*%pd+2}          uses 11-pt moment-matching
            approx. of Gaussian w/given 90% pt
         {if @cellpointer("contents")=0}{return}
         {let %temp,@cellpointer("contents")*%pk/1.2818456}
```

```
          {writeln +"11 "&@string(-5.188001*%temp,0)&" "&@string(-
             3.936167*%temp,0)&" "&@string(-2.865123*%temp,0)&" "&@string(-
             1.876035*%temp,0)&" "&@string(-0.928869*%temp,0)}
          {writeln +"   0 "&@string(0.928869*%temp,0)&"
             "&@string(1.876035*%temp,0)&" "&@string(2.865123*%temp,0)&"
             "&@string(3.936167*%temp,0)&" "&@string(5.188001*%temp,0)}
          {writeln "   .812185e-6 .195672e-3 .672028e-2 .0661387 .242240
             .369409 .242240 .0661387 .672028e-2 .195672e-3 .812185e-6"}

_to0      {d}
          {if @cellpointer("contents")<>0}{branch _to0}


_cleanerr{beep}{indicate +%temp&" (press Enter)"}{?}
\c        {indicate}        *** REMOVES ANY LEFTOVER MODE INDICATOR ***


\t        {paneloff}{windowsoff}     *** TOTALS CAP. FOR CURRENT PDS. ***
          {let %pd,startpd}          (start here for debugging)
          {goto}plants~{d 2}{r 2}{end}{d}     down F.O.R. col.
          {let %count,@cellpointer("row")-@cell("row",plants)-1}
__sumpds  {goto}periods~{r 2*%pd+1}
          {if @cellpointer("type")="b"}{goto}{%where}~{return}
          {goto}totals~{r 2*%pd+2}{let %where,@cellpointer("address")}
          {let +%where,0}
          {goto}plants~{d 2}{r}      to #units field
          {for %temp,1,%count,1,__inctot}
          {goto}totals~{r 2*%pd+2}{beep 3}{windowson}{windowsoff}
          {let %pd,%pd+1}~{if %pd<=endpd}{branch __sumpds}
          {return}
__inctot  {if @cellpointer("type")="b"}{d}{return}
          {let %unit,@cellpointer("contents")}         # units
          {r 2*%pd+1}
          {let +%where,@@(%where)+%unit*@cellpointer("contents")}
          {l 2*%pd+1}
          {d}


\g        {goto}dists~{r 2*%pd+1}{d 2}        *** SETS UP FOR DIST. GRAPH ***
          {if @cellpointer("type")="b"}{let %temp,"Reserve distribution not
             found"}{_cleanerr}{quit}
          /gg{bs}.{r}{end}{d}~c{l 4} leave ready to View


%pd            1
%temp        364
%temp2   0.002739
%count       364
%string  2 0 400     0.12
%unit          3
%pk         2850
%prob    0.997252
%where   $D$419
(blank)          %pkparms,%parms   ---,%coc
%pkrel   0.096132        0        0
%rel     0.003873        0        0      -44
(%dist)
```

Figure D-1. 1-2-3 Macros for REM

```
@echo off
rem     Example use:
rem     srelbat tempin.dat tempout.dat Finding Reliability for Period 1
cls
echo %3 %4 %5 %6 %7 %8 %9
srel < %1 > %2
```

Figure D-2. SRELBAT.BAT Batch File for Running SREL

```
C  Single-period electric generation reliability program.
C  Language: (almost) ANSI Fortran 77.
C  The simple I/O is intended for interfacing with other programs.
C  Change Log:
C  11/90   Bill Poland    First version.
C  12/90   Bill Poland    Added m & s parameter outputs for exponential
C                         approx., added switch for LOLE vs. EUE calcs.,
C                         refined COC calculation for EUE criterion.
C   1/91   Bill Poland    Added DELTA to control m & s estimation.

      program SREL
C  This single-period electric generation reliability program calculates
C  LOLE/LOLP (loss-of-load expectation/loss-of-load probability)
C  or EUE (expected unserved energy), and excess capacity over a
C  criterion, as well as the two parameters of an exponential approximation
C  of relative reliability as a function of available reserve.  The program
C  reads data from standard input device, calculates reliability, and
C  writes results to standard output device.  After an echoed title
C  line, the input is "list-directed," as follows.  It consists of a
C  base case group and one or more sensitivity case groups.  A group
C  consists of 6 controls, any number of unit/load descriptions, and a
C  terminating 0.  The controls are: step size, cutoff probability, type
C  of reliability measure, criterion, approximation step size, and output
C  control (see code comments below).  (Since changing the step size for
C  the sensitivities would be illegal, the step size is ignored after being
C  read for each sensitivity.)  A unit/load description consists of
C  a number of states, say n, followed by n integer capacities in ascending
C  order, and n-1 corresponding probabilities; the last one is computed
C  for you. You can model loads as a negative-capacity unit.  After
C  each input group is read, an output group, consisting of reliability
C  measures and an optional reserve probability distribution, is
C  written.
C  All calculations are done in double precision (but note that capacities
C  including capacity over criterion are integer on input & output).
C  Note the comment about the "sPrbMx" parameter below.  If it's set too
C  small, you'll get warnings written to unit 0.


C  Make declarations and initialize system
C  sPrbMx is maximum system probability array size: *** UPDATE AS NEEDED***
      integer sPrbMx
      parameter (sPrbMx = 2000)
      integer show
      double precision sum
      integer stepSz, capSz, cap(sPrbMx), sPrbSz, sPrbS0, type, delta,
     *        COC
      double precision cutOff, crit, rel, mParam, sParam, prob(sPrbMx),
     *                 prfRsv, prfRs0, sProb(sPrbMx), sProb0(sPrbMx)
      data prfRsv /0d0/, sPrbSz /1/, sProb(1) /1d0/
C     reserve for state i, rounded:
      iRsv(i) = idnint(prfRsv) + stepSz*(i-1)
      iRsv0(i) = idnint(prfRs0) + stepSz*(i-1)

C  Read base controls, and base data while building base system
      read (*,*)  stepSz, cutOff, type, crit, delta, show
1     read (*,*) capSz, (cap(i), i=1,capSz), (prob(i), i=1,capSz-1)
      if (capSz .ne. 0) then
```

Appendix D. Model Code

```
         sum = 0d0
         do 2 i=1,capSz-1
2             sum = sum + prob(i)
         prob(capSz) = 1d0 - sum
         call ADDU(stepSz,cutOff,capSz,cap,prob,prfRsv,sPrbSz,sProb,
     *             sPrbMx)
         goto 1
      end if

C  Find & write base results (including up to output lines of the
C  reserve distribution)
      call CALCR(stepSz,prfRsv,sPrbSz,sProb,type,crit,delta,rel,
     *           mParam,sParam,COC)
      if (crit .lt. 0d0) then
           write (*,91) rel, mParam, sParam
      else
         write (*,91) rel, mParam, sParam, COC
      end if
91    format( 3(1x,e22.15),1x,i10 )
      if (show .gt. 0)
     *   write (*,93) ( iRsv(i), sProb(i), i=1, min(show,sPrbSz) )
93    format(1x,i10,1x,e22.15)

C  Do the same for any sensitivity cases, after retrieving the base case
C  (note stepSz is effectively skipped in the read below, by use of i)
3     read (*,*,end=7) i, cutOff, type, crit, delta, show
      prfRs0 = prfRsv
      sPrbS0 = sPrbSz
      do 4 i=1,sPrbS0
4        sProb0(i) = sProb(i)
5     read (*,*) capSz, (cap(i), i=1,capSz), (prob(i), i=1,capSz-1)
      if (capSz .ne. 0) then
         sum = 0d0
         do 6 i=1,capSz-1
6             sum = sum + prob(i)
         prob(capSz) = 1d0 - sum
         call ADDU(stepSz,cutOff,capSz,cap,prob,prfRs0,sPrbS0,sProb0,
     *             sPrbMx)
         goto 5
      end if
      call CALCR(stepSz,prfRs0,sPrbS0,sProb0,type,crit,delta,rel,
     *           mParam,sParam,COC)
      if (crit .lt. 0d0) then
         write (*,91) rel, mParam, sParam
      else
         write (*,91) rel, mParam, sParam, COC
      end if
      if (show .gt. 0)
     *   write (*,93) ( iRsv0(i), sProb0(i), i=1,min(show,sPrbS0) )
      goto 3
7     end


      subroutine ADDU( stepSz, cutOff, capSz, cap, prob,
     *                 prfRsv, sPrbSz, sProb, sPrbMx )
C  (first arguments)   in      in    in/ch in/ch in/ch ("ch" means changed)
C  (remg. arguments)    in/out in/out in/out    in
```

```
C  Does convolution: adds the probability distribution of the capacity
C  of a generating unit (or a load) to that of the system.

C  stepSz = step size for rounding unit probability distributions
C  cutOff = minimum system probability to be represented.
C            If set to 0 or very small, you might get a Fortran underflow
C            error.
C  capSz  = current size of cap and prob arrays.
C  cap    = array of unit capacities, in non-decreasing order.
C  prob   = array of corresponding probabilities.
C  prfRsv = perfect system reserves, i.e. minimum rsv. represented.
C  sPrbSz = current size of sProb array.
C  sProb  = array of system reserve probabilities.
C  sPrbMx = maximum size of sProb array, i.e. its dimension size.

...
      return
       end


      subroutine CALCR( stepSz, prfRsv, sPrbSz, sProb, type, crit,
     *                  delta, rel, mParam, sParam, COC )
C  (first arguments)      in       in      in     in     in     in
C  (remaining arguments) in    out   out     out    out

C  Calculates system reliability measures based on loss-of-load expec-
C  tation (LOLE) or expected unserved energy (EUE).  If type is 0, LOLE
C  is used; otherwise EUE is used.  If crit is nonnegative, COC is
C  calculated.

C  stepSz, prfRsv, sPrbSz, sProb: see documentation in ADDU.
C  type   = 0 for LOLE calculations, or any other integer for EUE.
C  crit   = LOLE criterion, i.e. minimum acceptable value, as a
C           fraction, or EUE criterion in units of capacity times
C           period length -- or a negative # to inhibit COC calculation.
C  rel    = LOLE or EUE for the period (for units, see above).
C  delta  = integer multiple (e.g. 5) of stepSz to use in estimating
C           mParam and sParam, or a nonpositive integer to skip
C           calculating them.
C  mParam = m parameter for exponential approximation of reliability fn.
C           (based on a range of 2 delta x stepSz starting at about 0 reserve)
C           i.e. F(r) = exp( r/m - (r/s)**2 ).  Note that this approx.
C           can be valid only for r << (s/2)(s/m), the r giving maximum
C           approximated F(r), because F(r) cannot decrease.
C  sParam = s parameter for exponential approximation of reliability fn.
C           (based on a range of 2 delta x stepSz starting at about 0 reserve)
C  COC    = perfect capacity in excess of the criterion (if calculated).

...
      return
      end
```

Figure D-3. SREL Fortran Program