PN-ABN-601

CHARACTERIZATION REPORT
ROMANIAN PETROLEUM REFINING SECTOR

A SECTOR OVERVIEW OF:
CAPABILITY, ENERGY CONSUMPTION, ENVIRONMENTAL IMPACT
MAY, 1992

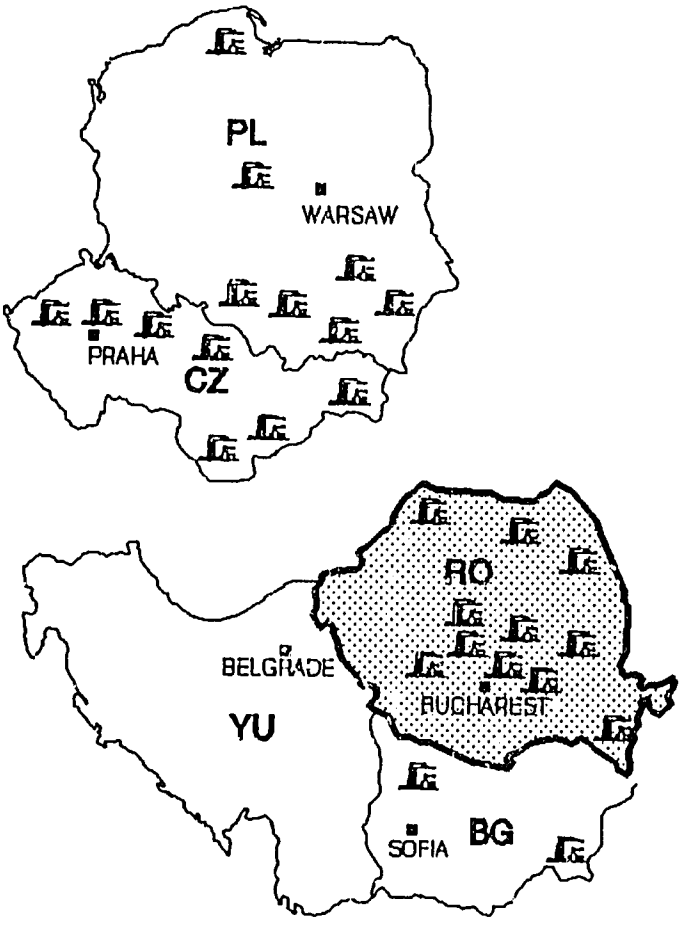

PREPARED BY: DAVY MCKEE CORPORATION, CHICAGO, IL USA
U.S. EMERGENCY ENERGY PROGRAM FOR EASTERN AND CENTRAL EUROPE

U.S. AGENCY FOR INTERNATIONAL DEVELOPMENT
BUREAU FOR EUROPE
WASHINGTON, D.C. 20523

CHARACTERIZATION REPORT
ROMANIAN PETROLEUM REFINING SECTOR

A SECTOR OVERVIEW OF:
CAPABILITY, ENERGY CONSUMPTION,
ENVIRONMENTAL IMPACT
MAY, 1992

PREPARED BY: DAVY MCKEE CORPORATION, CHICAGO, IL USA
300 SOUTH RIVERSIDE PLAZA
SUITE 1800
CHICAGO, IL 60606
(312) 669-7000

TEAM LEADER: ARKADIUSZ WALINSKI
SENIOR PROCESS: IRVIN H. LUTZ

U.S. EMERGENCY ENERGY PROGRAM FOR EASTERN AND CENTRAL EUROPE

U.S. AGENCY FOR INTERNATIONAL DEVELOPMENT
BUREAU FOR EUROPE
OFFICE OF DEVELOPMENT RESOURCES
ENERGY AND INFRASTRUCTURE DIVISION
WASHINGTON, D.C. 20523

USAID CONTRACT EUR-0015-C-00-1011-00

Davy

CHARACTERIZATION OF THE ROMANIAN PETROLEUM REFINING INDUSTRY
TABLE OF CONTENTS

EXECUTIVE SUMMARY

A. INTRODUCTION

1. OBJECTIVES
2. SUMMARY OF FIELD ACTIVITIES
3. GENERAL DESCRIPTION OF REPORT CONTENTS
4. LIMITATIONS ON USE OF REPORT

B. NATIONAL CONSIDERATIONS

1 OVERVIEW OF NATIONAL PETROLEUM REFINING INDUSTRY
1.1 National Petroleum Refineries
1.2 Crude Sourcing
1.3 Product Slates
1.4 Impact on Industry of Changes in Crudes and / or Products
1.5 Observations of Markets - Internal and External
1.6 Comparisons with International Trends
1.7 General Potential and Opportunities for Improvement
1.8 Observed General Problems and Trends
1.9 Environmental Considerations
1.10 Romanian Petroleum Refining Holding Company
1.11 Coal Utilization in Refineries

2. BASIS FOR SPECIFIC EXCLUSIONS

C. INDIVIDUAL REFINERY DATA

1. ARPECHIM REFINERY - PITESTI, ROMANIA

1.1 Summary Description of Refinery
1.2 Utilities, Services, Offsites
1.3 Chemicals and Catalysts Use

1.4 Previous 12-month Operating History
1.4.1 Recent Modifications
1.4.2 Crude Oil Supply
1.4.3 Operating Experience

1.4.4 Impact of Crude Oil Changes
1.4.5 Impact of Product Market Changes
1.4.6 Impact of Legislation and Social Changes

1.5 Environmental Considerations
1.5.1 Quality of Local Environment
1.5.2 Current Emissions Controls

1.6 Refinery Specific Potential and Opportunities for Improvement
1.7 Refinery Specific Problems and Trends
1.8 Reference to Data Base
1.9 Supporting Plant Data

2. ASTRA REFINERY - PLOIESTI, ROMANIA

2.1 Summary Description of Refinery
2.2 Utilities, Services, Offsites
2.3 Chemicals and Catalysts Use

2.4 Previous 12-month Operating History
2.4.1 Recent Modifications
2.4.2 Crude Oil Supply
2.4.3 Operating Experience
2.4.4 Impact of Crude Oil Changes
2.4.5 Impact of Product Market Changes
2.4.6 Impact of Legislation and Social Changes

2.5 Environmental Considerations
2.5.1 Quality of Local Environment
2.5.2 Current Emissions Controls

2.6 Refinery Specific Potential and Opportunities for Improvement
2.7 Refinery Specific Problems and Trends
2.8 Reference to Data Base
2.9 Supporting Plant Data

3. DARMENESTI REFINERY - DARMANESTI, ROMANIA

3.1 Summary Description of Refinery
3.2 Utilities, Services, Offsites
3.3 Chemicals and Catalysts Use

3.4 Previous 12-month Operating History
3.4.1 Recent Modifications
3.4.2 Crude Oil Supply
3.4.3 Operating Experiences

3.4.4 Impact of Crude Oil Changes
3.4.5 Impact of Product Market Changes
3.4.6 Impact of Legislation and Social Changes

3.5 Environmental Considerations
3.5.1 Quality of Local Environment
3.5.2 Current Emissions Controls
3.6 Refinery Specific Potential and Opportunities for Improvement
3.7 Refinery Specific Problems and Trends
3.8 Reference to Data Base
3.9 Supporting Plant Data

4. LUBRIFIN REFINERY - BRASOV, ROMANIA

4.1 Summary Description of Refinery
4.2 Utilities, Services, Offsites
4.3 Chemicals Use

4.4 Previous 12-month Operating History
4.4.1 Recent Modifications
4.4.2 Crude Oil Supply
4.4.3 Operating Experience
4.4.4 Impact of Crude and Other Raw Material Supplies
4.4.5 Impact of Product Market Changes
4.4.6 Impact of Legislation and Social Changes

4.5 Environmental Considerations
4.5.1 Quality of Local Environment
4.5.2 Current Emissions Controls

4.6 Refinery Specific Potential and Opportunities for Improvement
4.7 Refinery Specific Problems and Trends
4.8 Reference to Data Base
4.9 Supporting Plant Data

5. PETROBRAZI REFINERY - PLOIESTI, ROMANIA

5.1 Summary Description of Refinery
5.2 Utilities, Services, Offsites
5.3 Chemicals and Catalysts Use

5.4 Previous 12-month Operating History
5.4.1 Recent Modifications
5.4.2 Crude Oil Supply
5.4.3 Operating Experience
5.4.4 Impact of Crude Oil Changes

5.4.5 Impact of Product Market Changes
5.4.6 Impact of Legislation and Social Changes

5.5 Environmental Considerations
5.5.1 Quality of Local Environment
5.5.2 Current Emissions Controls

5.6 Refinery Specific Potential and Opportunities for Improvement
5.7 Refinery Specific Problems and Trends
5.8 Reference to Data Base
5.9 Supporting Plant Data

6. PETROMIDIA REFINERY - NAVODARI, ROMANIA

6.1 Summary Description of Refinery
6.2 Utilities, Services, Offsites
6.3 Chemicals and Catalysts Use

6.4 Previous 12-month Operating History
6.4.1 Recent Modifications
6.4.2 Crude Oil Supply
6.4.3 Operating Experience
6.4.4 Impact of Crude Oil Changes
6.4.5 Impact of Product Market Changes
6.4.6 Impact of Legislation and Social Changes

6.5 Environmental Considerations
6.5.1 Quality of Local Environment
6.5.2 Current Emissions Controls

6.6 Refinery Specific Potential and Opportunities for Improvement
6.7 Refinery Specific Problems and Trend
6.8 Reference to Data Base
6.9 Supporting Plant Data

7. PETROTEL REFINERY - PLOIESTI, ROMANIA

7.1 Summary Description of Refinery
7.2 Utilities, Services, Offsites
7.3 Chemicals and Catalysts Use

7.4 Previous 12-month Operating History
7.4.1 Recent Modifications
7.4.2 Crude Oil Supply
7.4.3 Operating Experience

7.4.4 Impact of Crude Oil Changes
7.4.5 Impact of Product Market Changes
7.4.6 Impact of Legislation and Social Changes

7.5 Environmental Considerations
7.5.1 Quality of Local Environment
7.5.2 Current Emissions Controls

7.6 Refinery Specific Potential and Opportunities for Improvement
7.7 Refinery Specific Problems and Trends
7.8 Reference to Data Base
7.9 Supporting Plant Data

8. RAFO REFINERY - ONESTI, ROMANIA

8.1 Summary Description of Refinery
8.2 Utilities, Services, Offsites
8.3 Chemicals Use

8.4 Previous 12-month Operating History
8.4.1 Recent Modifications
8.4.2 Crude Oil Supply
8.4.3 Operating Experience
8.4.4 Impact of Crude and Other Raw Material Supplies
8.4.5 Impact of Product Market Changes
8.4.6 Impact of Legislation and Social Changes

8.5 Environmental Considerations
8.5.1 Quality of Local Environment
8.5.2 Current Emissions Controls

8.6 Refinery Specific Potential and Opportunities for Improvement
8.7 Refinery Specific Problems and Trends
8.8 Reference to Data Base
8.9 Supporting Plant Data

9. STEAUA ROMANA REFINERY - CIMPINA, ROMANIA

9.1 Summary Description of Refinery
9.2 Utilities, Services, Offsites
9.3 Chemicals and Catalysts Use

9.4 Previous 12-month Operating History
9.4.1 Recent Modifications
9.4.2 Crude Oil Supply

9.4.3 Operating Experience
9.4.4 Impact of Crude Oil Changes
9.4.5 Impact of Product Market Changes
9.4.6 Impact of Legislation and Social Changes

9.5 Environmental Considerations
9.5.1 Quality of Local Environment
9.5.2 Current Emissions Controls

9.6 Refinery Specific Potential and Opportunities for Improvement
9.7 Refinery Specific Problems and Trends
9.8 Reference to Data Base
9.9 Supporting Plant Data

10. VEGA REFINERY - PLOIESTI, ROMANIA

10.1 Summary Description of Refinery
10.2 Utilities, Services, Offsites
10.3 Chemicals and Catalysts Use

10.4 Previous 12-month Operating History
10.4.1 Recent Modifications
10.4.2 Crude Oil Supply
10.4.3 Operating Experience
10.4.4 Impact of Crude Oil Changes
10.4.5 Impact of Product Market Changes
10.4.6 Impact of Legislation and Social Changes

10.5 Environmental Considerations
10.5.1 Quality of Local Environment
10.5.2 Current Emissions Controls

10.6 Refinery Specific Potential and Opportunities for Improvement
10.7 Refinery Specific Problems and Trend
10.8 Reference to Data Base
10.9 Supporting Plant Data

11. CRISANA REFINERY - SUPLACU de BARCAU, ROMANIA

11.1 Summary Description of Refinery
11.2 Refinery Products
11.3 Utilities, Services, Offsites

D. GENERAL REVIEW OF COAL USE IN REFINERY SERVICE

APPENDICES

APPENDIX A	SAMPLE REFINERY QUESTIONNAIRE
APPENDIX B	ABBREVIATIONS
APPENDIX C	TERMS OF REFERENCE

LIST OF TABLES

Table No.	Title	Page No.
B.1.1.1	CRUDE PROCESSED IN ROMANIA'S REFINERIES - JULY 1990 - JUNE 1991	B-3
B.1.3.1	ROMANIAN PETROLEUM STATISTICS	B-7
B.1.3.2	PRODUCT SLATE 1990 - 1991	B-8
B.1.3.3	FCC FEEDSTOCK SUPPLY	B-12
B.1.3.5	PETROLEUM TRANSPORT	B-13
C.1.1.1	PROCESS UNITS	C.1-5
C.1.3.1	CHEMICALS	C.1-11
C.1.3.2	ABSORBENTS AND CATALYSTS	C.1-12
C.1.4.1	MATERIAL BALANCE	C.1-14
C.1.5.1	WASTE WATER QUALITY	C.1-18
C.1.9.1	PRODUCT SPECIFICATIONS - C_3-C_4 HYDROCARBON CUTS	C.1-22
C.1.9.2	PRODUCT SPECIFICATIONS - GASOLINES AND NAPHTHAS	C.1-23
C.1.9.3	PRODUCT SPECIFICATIONS - DIESEL FUELS	C.1-24
C.1.9.4	PRODUCT SPECIFICATIONS - FUELS OILS	C.1-25
C.1.9.5	PRODUCT SPECIFICATIONS - ASPHALTS	C.1-26
C.1.9.6	STORAGE CAPACITY FOR FINAL PRODUCTS	C.1-27
C.1.9.7	CHARACTERISTICS OF CRUDE OILS	C.1-29
C.2.1.1	PROCESS UNITS	C.2-4
C.2.3.1	CHEMICALS	C.2-8
C.2.3.2	CATALYSTS	C.2-9
C.2.4.1	MATERIAL BALANCE, 1985 AND 1990	C.2-9
C.2.5.2.1	WASTE WATER QUALITY	C.2-13
C.2.9.1	PRODUCT SPECIFICATIONS - C_3-C_4 CUTS	C.2-16
C.2.9.2	PRODUCT SPECIFICATIONS - C_5 CUTS	C.2-16
C.2.9.3	PRODUCT SPECIFICATIONS - NAPHTHAS	C.2-17
C.2.9.4	PRODUCT SPECIFICATIONS - WHITE SPIRITS	C.2-17
C.2.9.5	PRODUCT SPECIFICATIONS - JET FUELS	C.2-18
C.2.9.6	PRODUCT SPECIFICATIONS - DIESEL FUELS	C.2-19
C.2.9.7	PRODUCT SPECIFICATIONS - FUEL OILS	C.2-19
C.2.9.8	PRODUCT SPECIFICATIONS - ASPHALTS	C.2-20
C.2.9.9	PRODUCT SPECIFICATIONS - COKE	C.2-20
C.2.9.10	PRODUCT SPECIFICATIONS - ELECTRICAL INSULATING OILS	C.2-21
C.2.9.11	PRODUCT SPECIFICATIONS - LUBRICATING OILS	C.2-21
C.2.9.12	PRODUCTS STORAGE CAPACITIES	C.2-22
C.2.9.13	CHARACTERISTICS OF CRUDE OILS	C.2-23
C.3.1.1	PROCESS UNITS	C.3-2
C.3.3.1	CHEMICALS	C.3-8
C.3.4.1.	MATERIAL BALANCE, 1990	C.3-9
C.3.5.1	WASTE WATER QUALITY	C.3-12

C.3.9.1 PRODUCT SPECIFICATIONS - C_3-C_4 CUTS C.3-15
C.3.9.2 PRODUCT SPECIFICATIONS - NAPHTHA GASOLINE C.3-15
C.3.9.3 PRODUCT SPECIFICATIONS - WHITE SPIRIT KEROSENE C.3-16
C.3.9.4 PRODUCT SPECIFICATIONS - DIESEL FUELS, GASOILS C.3-17
C.3.9.5 PRODUCT SPECIFICATIONS - FUEL OILS C.3-18
C.3.9.6 PRODUCT SPECIFICATIONS - COKE C.3-19
C.3.9.7 PRODUCT SPECIFICATIONS - LYE C.3-20
C.3.9.8 STORAGE CAPACITIES FOR INTERMEDIATE AND FINISHED PRODUCTS C.3-20
C.3.9.9 CHARACTERISTICS OF CRUDE OILS C.3-21
C.3.9.10 CHARACTERISTICS OF FEEDSTOCKS FOR NEEDLE COKE C.3-22
C.4.1.1 PROCESS UNITS C.4-4
C.4.3.1 CHEMICALS C.4-7
C.4.4.1 MATERIAL BALANCE C.4-8
C.4.5.2.1 WASTE WATER QUALITY C.4-11
C.4.9.1 STORAGE CAPACITY C.4-14
C.4.9.2 CHARACTERISTICS OF FEEDSTOCKS - NAPHTENIC LUBE CUTS . . . C.4-15
C.4.9.3 CHARACTERISTICS OF FEEDSTOCKS - PARAFFINIC LUBE CUTS . . . C.4-16
C.4.9.4 CHARACTERISTICS OF FEEDSTOCKS - FAT RAW MATERIALS C.4-17
C.4.9.5 CHARACTERISTICS OF FEEDSTOCKS - ALKALI AND SOAP C.4-17
C.4.9.6 PRODUCT SPECIFICATIONS - HYDRAULIC OILS C.4-18
C.4.9.7 PRODUCT SPECIFICATIONS - E.P. HYDRAULIC OILS C.4-19
C.4.9.8 PRODUCT SPECIFICATIONS - TURBINE OILS C.4-20
C.4.9.9 PRODUCT SPECIFICATIONS - INDUSTRIAL GEAR OILS C.4-21
C.4.9.10 PRODUCT SPECIFICATIONS - METALWORKING OILS C.4-22
C.4.9.11 PRODUCT SPECIFICATIONS - LITHIUM MULTI PURPOSE GREASES . C.4-23
C.4.9.12 PRODUCT SPECIFICATIONS - LITHIUM-CALCIUM AND LITHIUM CALCIUM-LEAD GREASES C.4-24
C.4.9.13 PRODUCT SPECIFICATIONS - OTHER GREASES C.4-25
C.4.9.14 ADDITIVES FOR LUBRICANTS C.4-26
C.5.1.1 PROCESS UNITS C.5-2
C.5.1.2 MATERIAL BALANCE 1990 . . . . . C.5-6
C.5.2.1 REFINERY FUEL GAS COMPOSITION C.5-9
C.5.3.1 CHEMICALS C.5-12
C.5.3.2 CATALYSTS C.5-13
C.5.2.1 WASTE WATER QUALITY C.5-15
C.5.9.1 PRODUCT SPECIFICATIONS - C3-C4 CUTS C.5-19
C.5.9.2 PRODUCT SPECIFICATIONS - GASOLINES AND NAPHTHA C.5-20
C.5.9.3 PRODUCT SPECIFICATIONS - JET FUELS C.5-21
C.5.9.4 PRODUCT SPECIFICATIONS - DIESEL FUELS C.5-22
C.5.9.5 PRODUCT SPECIFICATIONS - FUEL OILS C.5-23
C.5.9.6 PRODUCT SPECIFICATIONS - AROMATIC CONCENTRATE FOR CARBON BLOCK MANUFACTURING C.5-24
C.5.9.7 PRODUCT SPECIFICATIONS - COKE C.5-24
C.5.9.8 PRODUCT SPECIFICATIONS - AROMATIC HYDROCARBONS C.5-25
C.5.9.9 STORAGE CAPACITIES C.5-26
C.5.9.10 CRUDE OIL PROPERTIES C.5-27

C.6.1.1	PROCESS UNITS	C.6-4
C.6.1.2A	MATERIAL BALANCE (FEEDSTOCK INPUT)	C.6-5
C.6.2.1	FUEL GAS COMPOSITION	C.6-8
C.6.3.1	CHEMICALS	C.6-10
C.6.3.2	CATALYSTS	C.6-12
C.6.5.1	WASTE WATER QUALITY	C.6-15
C.6.9.1	PRODUCT SPECIFICATIONS - C_3-C_4	C.6-18
C.6.9.2	PRODUCT SPECIFICATIONS - NAPHTHA AND GASOLINE	C.6-18
C.6.9.3	PRODUCT SPECIFICATIONS - JET FUEL	C.6-19
C.6.9.4	PRODUCT SPECIFICATIONS - DIESEL FUELS	C.6-19
C.6.9.5	PRODUCT SPECIFICATIONS - FUEL OILS	C.6-20
C.6.9.6	PRODUCT SPECIFICATIONS - AROMATIC HYDROCARBONS	C.6-20
C.6.9.7	STORAGE CAPACITIES	C.6-21
C.6.9.8	PROPERTIES OF CRUDES PROCESSED BETWEEN JUNE 1990 AND MAY 1991	C.6-23
C.6.9.9	PROPERTIES OF OTHER FEEDSTOCK	C.6-23
C.6.9.10	PROPERTIES OF OTHER LIQUID CUTS	C.6-24
C.7.1.1	PROCESS UNITS	C.7-4
C.7.1.2	MATERIAL BALANCE	C.7-5
C.7.2.1	FUEL GAS COMPOSITION	C.7-7
C.7.3.1	CHEMICALS	C.7-10
C.7.3.2	CATALYSTS	C.7-11
C.7.5.2.1	WASTE WATER QUALITY	C.7-15
C.7.9.1	PRODUCT SPECIFICATIONS - C_3-C_4 CUTS	C.7-19
C.7.9.2	PRODUCT SPECIFICATIONS - GASOLINES AND NAPHTHA	C.7-20
C.7.9.3	PRODUCT SPECIFICATIONS - NORMAL PARAFFINS	C.7-20
C.7.9.4	PRODUCT SPECIFICATIONS - JET FUELS	C.7-21
C.7.9.5	PRODUCT SPECIFICATIONS - DIESEL FUELS	C.7-22
C.7.9.6	PRODUCT SPECIFICATIONS - LIQUID FUELS	C.7-23
C.7.9.7	PRODUCT SPECIFICATIONS - ASPHALTS	C.7-24
C.7.9.8	PRODUCT SPECIFICATIONS - COKE	C.7-24
C.7.9.9	PRODUCT SPECIFICATIONS - GREASES	C.7-25
C.7.9.9	PRODUCT SPECIFICATIONS - GREASES - continued	C.7-26
C.7.9.10	PRODUCT SPECIFICATIONS - CORROSION PROTECTION FLUIDS	C.7-27
C.7.9.11	PRODUCT SPECIFICATIONS - METAL WORKING EMULSIFIABLE OILS	C.7-28
C.7.9.12	PRODUCT SPECIFICATIONS - ADDITIVES FOR LUBRICANTS	C.7-29
C.7.9.13	PRODUCT SPECIFICATIONS - LUBE OILS	C.7-30
C.7.9.14	PRODUCT SPECIFICATIONS - LUBE OILS - continued	C.7-31
C.7.9.15	PRODUCT SPECIFICATIONS - LUBE OILS - continued	C.7-32
C.7.9.16	PRODUCT SPECIFICATIONS - LUBE OILS - continued	C.7-33
C.7.9.17	PRODUCT SPECIFICATIONS - LUBE OILS - continued	C.7-34
C.7.9.18	PRODUCT SPECIFICATIONS - WHITE OILS	C.7-36
C.7.9.19	PRODUCT SPECIFICATIONS - N-PARAFFIN & CEREUS WAXES	C.7-37
C.7.9.20	STORAGE CAPACITIES	C.7-38
C.7.9.21	PROPERTIES OF CRUDES	C.7-39

C.8.1.1	PROCESS UNITS	C.8-4
C.8.1.2	MATERIAL BALANCE	C.8-5
C.8.1.3	MATERIAL BALANCE - PRODUCTS	C.8-6
C.8.2.4	FUEL GAS COMPOSITION	C.8-7
C.8.3.1	CHEMICALS	C.8-11
C.8.3.2.	CATALYSTS	C.8-12
C.8.5.2.1	WASTE WATER QUALITY	C.8-15
C.8.9.1	PRODUCT SPECIFICATIONS - C3-CUTS	C.8-19
C.8.9.2	PRODUCT SPECIFICATIONS - BUTANE AND LPG	C.8-19
C.8.9.3	PRODUCT SPECIFICATIONS - B-B CUTS, ISOBUTANE, PENTANE	C.8-20
C.8.9.4	PRODUCT SPECIFICATIONS - AROMATIC HYDROCARBONS	C.8-20
C.8.9.5	PRODUCT SPECIFICATIONS - NAPHTHA & GASOLINE	C.8-21
C.8.9.6	PRODUCT SPECIFICATIONS - KEROSENES	C.8-21
C.8.9.7	PRODUCT SPECIFICATIONS - DIESEL FUELS	C.8-22
C.8.9.8	PRODUCT SPECIFICATIONS - FUEL OILS	C.8-23
C.8.9.9	PRODUCT SPECIFICATIONS - COKE	C.8-24
C.8.9.10	PRODUCT SPECIFICATIONS - N-PARAFFINS	C.8-24
C.8.9.11	PRODUCT SPECIFICATIONS - SULFUR	C.8-25
C.8.9.12	PRODUCT SPECIFICATIONS - AROMATIC CONCENTRATE FEEDSTOCK FOR CARBON BLOCK	C.8-25
C.8.9.13	STORAGE CAPACITIES	C.8-26
C.8.9.14	PROPERTIES OF CRUDES	C.8-27
C.8.9.15	PROPERTIES OF CRUDE STOCK FOR FCC	C.8-28
C.8.9.16	COAL PROCESSING BENZENE CUT	C.8-28
C.9.1.1	PROCESS UNITS	C.9-4
C.9.1.2	MATERIAL BALANCE	C.9-5
C.9.2.1	FUEL GAS COMPOSITION	C.9-8
C.9.3.1	CHEMICALS	C.9-10
C.9.4.3.1	UNIT DOWN-TIME	C.9-12
C.9.5.1	WASTE WATER QUALITY	C.9-14
C.9.9.1	PRODUCT SPECIFICATION - NAPHTHA	C.9-17
C.9.9.2	PRODUCT SPECIFICATIONS - DIESEL FUELS	C.9-17
C.9.9.3	PRODUCT SPECIFICATIONS - FUEL OIL	C.9-18
C.9.9.4	PRODUCT SPECIFICATIONS - LUBE OIL INDUSTRIAL	C.9-18
C.9.9.5	PRODUCT SPECIFICATIONS - LUBE OILS FOR TEXTILE MACHINERY	C.9-19
C.9.9.6	PRODUCT SPECIFICATIONS - ASPHALTS	C.9-20
C.9.9.7	PRODUCT SPECIFICATIONS - PARAFFIN WAXES	C.9-20
C.9.9.8	PRODUCT SPECIFICATIONS - DEMULSIFYING AGENT D5	C.9-20
C.9.9.9	STORAGE CAPACITY	C.9-21
C.9.9.10	PROPERTIES OF CRUDES	C.9-22
C.10.1.1	PROCESS UNITS	C.10-3
C.10.1.2	MATERIAL BALANCE, 1990	C.10-4
C.10.2.1	FUEL GAS COMPOSITION	C.10-6
C.10.3.1	CHEMICALS	C.10-8
C.10.3.2	CATALYST	C.10-9
C.10.5.2	WASTE WATER QUALITY	C.10-12
C.10.9.1	PRODUCT SPECIFICATION - NAPHTHA	C.10-15

C.10.9.2 PRODUCT SPECIFICATIONS - EXTRACTION GASOLINES C.10-16
C.10.9.3 PRODUCT SPECIFICATIONS - N-HEXANE, N-HEPTANE C.10-17
C.10.9.4 PRODUCT SPECIFICATIONS - WHITE SPIRIT C.10-17
C.10.9.5 PRODUCT SPECIFICATIONS - KEROSENES C.10-18
C.10.9.6 PRODUCT SPECIFICATIONS - DIESEL FUELS C.10-19
C.10.9.7 FEEDSTOCK FOR COKING (TO PETROTEL) AND FUEL OIL (40/45) . C.10-19
C.10.9.8 PRODUCT SPECIFICATIONS - D.5 DEMULSIFIER (FOR CRUDE OIL) . C.10-20
C.10.9.9 PRODUCT SPECIFICATIONS - ASPHALTS C.10-20
C.10.9.10 PRODUCT SPECIFICATIONS - LUBE OILS C.10-21
C.10.9.11 STORAGE CAPACITIES C.10-22
C.10.9.12 PROPERTIES OF CRUDES C.10-23
D.1 ROMANIAN LIGNITE PROPERTIES D-7
D.2 FUELS USED TO PRODUCE ELECTRICITY D-8
D.3 CONSUMPTION OF CONVENTIONAL FUEL D-8
D.4 ROMANIAN ENERGY RESOURCES, 1989 ..... D-9

LIST OF FIGURES

Figure No.	Title	Page No.
Figure 1	Location of Romanian Refineries	B-2
Figure 2	Overall Block Flow Diagram - Refinery Line #1	C.1-2
Figure 3	Overall Block Flow Diagram - Refinery Line #2	C.1-3
Figure 4	Overall Block Flow Diagram - Astra Refinery	C.2-2
Figure 5	Overall Refinery Block Flow Diagram	C.3-3
Figure 6	Lubrifin S.A. - Overall Refinery Block Flow Diagram	C.4-3
Figure 7	Petrobrazi Refinery - Overall Block Flow Diagram	C.5-5
Figure 8	Petromidia S.A. - Overall Refinery Block Flow Diagram	C.6-3
Figure 9	Petrotel Refinery - Overall Block Flow Diagram	C.7-3
Figure 10	Refinery No. 1 - Block Flow Diagram	C.8-2
Figure 11	Refinery No. 2 - Block Flow Diagram	C.8-3
Figure 12	Steaua Romana Refinery - Overall Block Flow Diagram	C.9-2
Figure 13	Vega Refinery - Overall Refinery Block Diagram	C.10-2
Figure 14	Crisana Refinery - Overall Block Flow Diagram	C.11-2

In 1991, the United States Agency for International Development (USAID) retained the Chicago office of the Davy McKee Corporation (DMC) to perform a technical study of ten of the eleven refineries that constitute the Petroleum Refining industry of Romania. The results of the study are presented on two levels: Refinery Characterization and Selected Refinery Evaluation.

The project started with meetings in early December 1990, between the United States and Romanian energy officials. During the meetings, a plan and schedule were developed for participation by Romania in the U. S. Emergency Energy Program. The Romanian Characterization Reports presented here contain the elements of review agreed upon at these initial meetings.

The three goals of the program were to provide a data base for future planning activities in Eastern Europe to improve the viability of the petroleum sector, support the achievement of improved energy consumption efficiency and support alleviation of adverse environmental impact. The Scope of Work, or Terms of Reference for this project may be found in Appendix C of this report.

A refinery Characterization Report has been produced for each of the eleven refineries in Romania, although one of the smallest, Crisana, at 400,000 tonnes per year capacity, was not visited by the DMC team, and data pertaining to this unit reflects a brief description of the refinery as provided by RAFIROM, the Romanian petroleum processing holding company. Each report provides a technical description of the refinery focusing on the feedstocks, feedstock variability and the yield slate. Data on the physical equipment of each refinery have been gathered with the aim of establishing a refinery data base which may be extended in the future to feed into an optimization program on refinery financial and operational analysis. Utility data supporting the process operation have been made part of the Characterization study as has been the quantity and quality of effluents.

It should be noted that RAFIROM required that DMC sign a Secrecy Agreement prior to release of information to our team. Further, we also signed a similar agreement with UOP of Des Plaines, IL. Each organization required review and approval of a draft report. Such review and approval has occurred.

A map showing the geographical location of the eleven individual refineries is presented in Section B of the main body of the report.

Two of the national refineries, Petrobrazi and Petrotel, were selected to study the potential of achieving substantial improvement in operations and energy efficiency and disposal of solid, liquid and gaseous effluents - both by reduction in volume and method of handling. Order-of-magnitude capital requirements and simple payback time associated with identified opportunities form part of these Evaluation reports.

At the outset of the project, teams were organized for both the characterization and evaluation efforts consisting of engineering professionals with many years of experience

in their respective disciplines in the design and technical operation of a petroleum refinery. Technical disciplines represented within the team were chemical, process, mechanical, electrical, and instrumentation engineering.

The acquisition of data for preparation of the characterization reports may be considered to be divided into three stages:

- Initially, there was a preliminary, or reconnaissance visit to Romania during which a rather detailed questionnaire was furnished to the refinery managers. The questionnaire was designed to cover most of the data deemed necessary for the preparation of the characterization report. During the visit, host country consultants were engaged to participate and provide technical assistance for in-country phases of the work. In addition to such technical assistance, the consultants were able to provide custom and language interpretation to insure mutual understanding. A further goal in the retention of the consultant, who was a Romanian national, was his ability after involvement in the project, to provide to the refineries in the country as well as the ministerial offices, the benefits of all the technologies and experience gained from the project without the expenditure of hard currency.

- The second step was assembly in Chicago of the DMC team together with the host country consultants for a week of orientation. The team departed Chicago arriving at the first refinery to be visited, Petrobrazi - the largest refinery in Romania, on July 15, 1991.

- The third stage of the characterization effort consisted of a visit by the team to ten of the eleven refineries within Romania. During these visits, the completed questionnaires were received and their contents clarified and amplified in discussions with refinery operating personnel. The DMC team and DMC program management are very appreciative of the effort and cooperation extended by the personnel of all refineries, RAFIROM and Ministry staff during the limited visit, subsequent meetings and contacts as were needed for clarification, etc. The dates of each site visit are covered in the description of each refinery.

Currently, Romania has eleven (11) operating petroleum refineries within the boundaries of the country. About half have some downstream processing of crude oil fractions to chemical feeds, intermediate petrochemical feedstocks and downstream petrochemicals. The petrochemical facilities were excluded from the scope of this study, no data was gathered on them, and they were not entered during the refinery visits.

The ARPECHIM REFINERY located close to Pitesti City, was first commissioned in 1969. This refinery, attached to a large petrochemical complex, is able to process 6.5 million tonnes/yr of high sulfur crude, and produces gasoline, diesel fuels, fuel oils, asphalts, as well as naphtha, C_3-C_4 and aromatic hydrocarbons as feedstocks for petrochemistry.

2

Arpechim also has a lube-oil manufacturing line rated at 150 000 tonnes/yr of base stocks and a hydrocracker designed to produce over 30 000 tonnes/yr of extra high V.I. lube base stocks. There is also N-paraffin separation unit (about 100 000 tonnes/yr feedstock for hyproteins). (DMC team visit 12-14 August, 1991)

The Refinery should seize upon existing opportunity to save up to 25 000 tonnes per year in fuel gas by improving furnace efficiency through the use of flue gas analyzers and reductions of excess air. Product losses are high enough to justify a special program in Hydrocarbon Emission Recovery and improvements in measurements. Additionally, they must find a good, constant source of Paraffinic crude (about 3.5 million tonnes/year) suitable for lube oil manufacturing to allow re-starting of the lube oil line.

The ASTRA REFINERY has operated since the beginning of the 20th century and is located in the southern section of Ploiesti City. Some of the units that were built before World War II were revamped in the 60s and 70s. The refinery produces naphtha, jet fuel, diesel fuels, fuel oils, and asphalts. New units were built in the 60s and 70s to produce transformer oil, low natural pour point naphthenic lube oils and petroleum coke. The processing throughput of the Astra refinery is 1.8 to 2 million tonnes/yr of low sulphur crude. (DMC team visit 22-24 July, 1991).

The Refinery has special environmental needs; the current acid treatment processes should be replaced by hydrofinishing and spent clay must be freed of oil. Further, ASTRA is very dependent upon the selection of crude oil and a re-evaluation of the crude throughput and product slate (specialized industrial lubricants and oils) is necessary to sustain the facilities future existence.

The DARMANESTI REFINERY was built in the early 1950s, is located in Eastern Romania and processes 1 million tonnes/yr of low sulphur local crudes. Naphtha, kerosene, diesel fuels, fuel oil and C_3-C_4 hydrocarbons are the main products. In 1987, the Darmanesti Refinery became a needle coke manufacturer, able to produce about 50 000 tonnes/yr. (DMC team visit 2-3 August, 1991).

The future at DARMANESTI seems to be in needle coke manufacturing. Further, a dimer unit to use olefins to produce a high octane blending stock would be an advantage. Completion of pipelines that will link DARMANESTI and RAFO(ONESTI) would benefit the Refinery.

LUBRIFIN is a high grade industrial oils and grease manufacturer located in Brazov City, in the central section of Romania. Lubrifin uses intermediate lube stocks from the Steaua Romana, Petrotel and Astra refineries, to produce about 35 000 to 40 000 tonnes/yr of lube oils and 7 500 tonnes/yr of grease. (DMC team visit 8-10 August, 1991).

LUBRIFIN is in an excellent position in the local market. It is the only producer of high grade industrial lubricants, oils and greases in the area, near the highly industrialized city of Brasov. The major problems at the Refinery are due to the age of the equipment,low level of automation, environmental concerns and dependence on local feedstocks. Note

that some equipment revamp is underway, but more is needed. Exporting products would help generate the funds needed for revamping programs.

PETROBRAZI is the largest refinery in the country attached to a petrochemical complex. It began operation at the start of the 20th century, however all units now in operation were built in 1964-1970 and 1980-1988. Petrobrazi is able to process 4 million tonnes per year of low sulphur crude oil and 3.5 million tonnes per year of high sulphur crude to produce gasoline, jet fuel, diesel fuels, fuel oils, coke, and LPG as well as petrochemical feedstocks - naphtha, C_3-C_4 cuts and aromatic hydrocarbons. (DMC team visit 15-17 July 1991).

The intermittent crude oil supply and resultant frequent start-ups and shutdowns is a major Refinery problem which wastes energy and contributes to a high loss. Losses should be controlled through improved measurement instrumentation and recovery of volatile hydrocarbon emissions. Spare parts and frequent equipment failures continue to be an issue.

PETROMIDIA is a 3.5 million tonne/yr refinery, built in the 1970s, is located on the Black Sea coast, close to Constanta Harbor and attached to a petrochemical complex. Petromidia processes high sulphur imported crudes to produce gasoline, jet fuel, diesel fuels, fuel oils, coke, LPG, and petrochemical feedstocks - naphtha, C_3-C_4 cuts and aromatic hydrocarbons. (DMC team visit 16-20 August 1991).

There is a revamp program underway which includes improving energy efficiency, atmospheric and vacuum distillation improvements and conservation of a MTBE unit for octane enhancement. The Hydrogen balance needs to be addressed as too much of this valuable gas is burned as a fuel.

PETROTEL is a manufacturer of gasoline, jet fuel, diesel fuels, fuel oils, asphalts, coke, petrochemical feedstocks (naphtha, C_3-C_4 hydrocarbons, N-paraffin for detergents), lubricating (mainly engine) oils, paraffin wax, corrosion protecting fluids and other products. Processing capacity is 3.5 million tonnes/yr high sulphur crude and 1.8 million tonnes/yr of low sulphur crude. Most of the units were built after 1974, with the exception of the lube oil manufacturing line which was completed in the middle and late 1950s. (DMC team visit 29-31 July, 1991).

The lube oil train needs to be modernized, including the furfural and dewaxing units. Hyrotreating of white oils is also desirable, rather than continuing to use Sulfuric Acid treatment. The petrochemical units should be evaluated with respect to re-starting operations. Maintenance and spare parts is an area that needs to be improved to insure improved on-stream time and minimize unscheduled shutdowns. Losses are also a problem and effective instrumentation and vapor recovery is needed.

The RAFO REFINERY was built in three steps - 1950-1952, 1965-1970, and 1979-1984. The refinery is able to process 1.75 million tonnes/yr of low sulphur crude and 3.5 million tonnes/yr of high sulphur crude to gasoline, kerosene, diesel fuels, fuel oils, coke, and

4

feedstocks for petrochemistry - C_3-C_4 hydrocarbons, aromatic hydrocarbons, naphtha and N-paraffins for detergents. (DMC team visit 5-7 August 1991).

High losses, continuity and quantity of crude, and re-introducing amines into the gas desulfurization process are some of the issues that RAFO must address. Better coordination of crude supply with the neighboring DARMANESTI Refinery should be considered.

STEAUA ROMANA is one of the oldest Romanian refineries, and has operated continuously since 1895. This refinery, located in Cimpina City, 30 km north of Ploiesti specializes in manufacturing paraffin wax and intermediate partially dewaxed lube oil base stocks, in addition to naphtha, kerosene, diesel fuels, fuel oils and asphalts. Processing throughput is 400 000 tonnes/yr of low sulphur crude oil. (DMC team visit 25-27 July, 1991).

The Refinery has identified an ambitious program of process and environmental improvements. The availability of financing to fund these projects is one issue that needs to be resolved. Adequate crude supply is a problem along with aging equipment. Environmental concerns are important and note that this Refinery is located close to a residential area. The Paraffin separation process is reported to be efficient and low cost.

The VEGA REFINERY located in the northern section of Ploiesti City is an old refinery established in 1904. The Vega refinery processes about 800 000 tonnes/yr of low sulphur crude, to produce naphtha, kerosene, white spirits, diesel fuels, fuel oils, asphalts, low grade industrial lubricating oils, hydrocarbon solvents (extraction gasolines) and 120 000 tonnes/yr raffinate (from BTX extraction) to produce hexane and heptane solvents for ethylene and propylene polymerization. (DMC team visit 18-20 July, 1991).

The VEGA REFINERY is a typical example of what a small Refinery can do by specializing in low volume but high value products. Refinery losses must be reduced, including volatile hydrocarbon emissions. The existing obsolete, high energy, high loss lube oil process should be replaced with hydrotreating, but financing this activity is a problem.

The CRISANA REFINERY, located in northwestern Romania, in Soplacu de Barcau, is rated at 400 000 tonnes per year of domestic crude oil with a reported 2% sulphur content and only 5% light ends (up to 240°C). This crude is not suitable for lube manufacturing, but is good for asphalt blowing. Products produced include domestic, light and heavy fuel oils in addition to oxidized asphalt from the asphalt blowing unit. This refinery was not visited by the DMC team.

The Romanian refineries can be divided into two main groups:

1. Astra, Darmanesti, Steaua Romana, Vega and Crisana are old refineries, able to process in total about 4.6 million tonnes/yr of low sulphur crude. The complexity of these refineries is quite low and their product state consists basically of naphtha for processing by catalytic reforming or

pyrolysis, kerosene and jet fuel, diesel fuels, fuel oils, asphalts, coke and selectively some more specialized low volume products such as transformer oils, white oils, lubricating oils, paraffin wax and hydrocarbon solvents.

2. Arpechim, Petrobrazi, Petromidia, Petrotel and Rafo are larger and newer refineries. These refineries can process about 20.5 million tonnes/yr of high sulphur crude, in their units built after 1960 and an additional 7.5 million tonnes low sulphur crude in the older units still in operation. These refineries are far more complex. Their product state includes not only conventional petroleum products but also gases and aromatics for petrochemistry, high octane gasoline components, jet fuels, low sulphur diesel fuels and engine oils.

   Arpechim, Petrobrazi, Rafo, Petromidia have, in addition, aromatic hydrocarbons separation facilities, producing high purity benzene, toluene, ethylbenzene, ortho-xylene and para-xylene by liquid extraction, fractionation and molecular sieve absorption (Parex process); meta-xylene is isomerized to other C_8 aromatics and N-paraffins are typically produced in a N-paraffin separation unit (Molex process). One such unit was commissioned at Arpechim (1980) to produce feedstock for bioproteins. Two smaller N-paraffins separation units in Petrotel and Rafo refineries (molecular sieve absorption, Chinese technology) are intended to produce feedstock for detergents.

   Lubricating oil manufacturing is carried on in Petrotel (engine oils and medium grade industrial paraffinic base oils), Lubrifin (high grade industrial paraffin and naphthenic base oils, Astra (naphthenic) low natural pour point oils including transformer oil and Vega (non paraffinic base, low grade industrial oils). Processes used are furfural extraction or sulphuric acid treating, solvent dewaxing (cooling-filtration dewaxing is used also by Steaua Romana refinery for paraffin wax separation), hydrofinishing or bleaching clay treating. Arpechim has a complete line (propane deasphalting, furfural extraction, MEK dewaxing, hydrofinishing) commissioned in 1978, and is able to produce 150 000 tonnes/yr high grade engine oils. Note that this unit has been shut down for about six years due to lack of supply of imported paraffinic selected crude. By the end of 1991, Arpechim will restart its hydrocracking unit to produce about 30000 tonnes/yr low viscosity extra high viscosity index lube base stocks. Greases and corrosion protection products are manufactured by Lubrifin and Petrotel, using old batchwise units. Petrotel and Steaua Romana are the paraffin wax manufacturers in the country.

The Refineries in Romania, as an overall observation, appear mutually dependent upon each other for the exchange of feedstocks.

Romania began to import crude oil in 1970, primarily from Middle East countries (Iran,

Iraq, Syria, Egypt, Saudi Arabia, Kuwait) Libya in addition to the USSR. Until social and political changes occurred in Iran, this country was considered the main imported crude source. The design basis for new refineries built in the 70s was a 50-50% mixture of Iranian light and heavy crudes. As Iraq has important debts to Romania, Iraqi crude was also an important potential crude source and the subsequent Gulf crisis had a very strong effect on Romania's hard currency balance due to inability of Iraq to pay its debts in crude. During the late 80s, crude import from USSR became more important than previously but it never had the same importance as in other Central and East European countries. After Comecon ceased to exist and the barter base for import was abandoned, Soviet crude lost any special position in Romania's import structure. There was not a coordinated policy of crude import and long term contracts intended to do so failed to ensure a steady supply. Practically, crude was purchased on a spot base, resulting in low processing efficiency, as refineries were forced to switch crude very frequently or to shut down units for lack of feedstock.

Domestic crude production reached its maximum in 1970 when 13.6 million tonnes were extracted and processed. Since then, extraction decreased to 9.2 million tonnes in 1989 and 7.8 million tonnes in 1990. Although forecasting is risky, especially if based on the 1984-1987 experience, an estimated production of 6.5 to 7 million tonnes per year could be expected by 1995. Romanian crudes are divided mainly into three categories, Non-paraffinic, Intermediate and paraffinic; all domestic crudes are low sulphur (less than 0.6 wt% sulfur.

Of primary concern to the Romanian petroleum processing industry at the present time is to find financial means to import crude. In the coming 2-3 years, assuming the economy will gradually reach the 1989 level, Romania will need about 10-12 million tonnes/yr of imported crude to cover its internal consumption needs for petroleum products and to satisfy 50-60% of the demands for petrochemical feedstocks. As a natural decline of domestic crude production occurs, imported crude amounts needed for internal consumption will rise. One of the possible avenues for accomplishing this should be toll processing of crude oil for interested companies. Processing throughput could be as large as 12 million tonnes per year and with careful operation perhaps even higher. Petromidia, Petrobrazi, Petrotel and the Arpechim refineries are the most attractive for such processing due to their complex processing structure, flexibility and good pipeline connections.

During 1990, the total crude oil processed in Romania was approximately 20.6 million tonnes, as contrasted to a design rate of 32.65 million tonnes per year. The refinery products produced from this crude were sufficient to meet demand.

The rather high percentage of feedstocks for petrochemicals in the product slate is peculiar to Romania refineries, especially for the newer ones. Fuel oils are also an important component of the product slate in supplying energy and heat production demands of the country. In 1989, on a nationwide basis, lignite supplied 31.7% of the fuel for electricity, natural gas supplied 45.7% and liquid fuel oil 13.7%; coal and other fuels supplied the balance. Supports for these demands is the principal reason the total installed throughput

exceeds the demand of internal consumption. The planning envisioned that the surplus be exported and consequently process units and their products were designed to meet international specifications. Changes in the international market occurred in the last year; mainly related to limited aromatic content, low or lead free gasolines, and lower sulphur in diesel fuels. Opening of the internal market to competing imported products (lubricants mainly) occurred at the same time. The changing market relationships and demands brought with them attendant new challenges for the refineries, i.e. to meet external competition and changing more stringent product specifications.

Processing about 18 to 20 million tonnes/yr of crude, Romania could cover its basic demand for petroleum products and about 50-60% of the feedstocks needed by a full throughput operating petrochemical industry, (at the level of 1989 year, without considering any growth of the economy). This means that about 12 million tonnes/yr crude could be processed as toll manufacturing. Some processing agreements in fact have recently been concluded. Petromidia is on the Black Sea, well situated for such contracts. Pipelines connect the large refining centers of Ploiesti and Pitesti to the coast and to the Danube River, making the refineries located in these areas attractive for processing contracts and for the export market.

Substantial changes in product slate are not foreseen or expected to be changed in the near future, as gasoline, jet fuels, and diesel fuels will remain the principal products for exporting. Improvements in quality are needed for these products such as raising the octane number of unleaded gasoline (MTBE, alkylate, isomerizate) and decreasing sulphur content of diesel fuels (which means deeper desulphurization and higher hydrogen production.)

The quality of lube oils needs to be improved, to allow the domestic product to compete in domestic market as it opens to imports, as well as to provide for a quality export.

Crude is transported to the refineries by pipeline from the Constania Harbor terminal and by pipeline from domestic oilfields. Products are shipped by pipeline, railway and over-the-road tank truck. In 1989, about 55% of total crude and product shipment was by pipeline.

Tetra-ethyl lead is still used as an octane booster in most of the gasoline produced as the majority of the cars in the country are manufactured to operate on leaded gasoline. A small amount of unleaded gasoline is currently produced for imported cars and tourists. Most Western European countries provide mainly unleaded gasoline for cars, and a small amount of leaded gasoline for older cars and farm machinery. As the Romanian gasoline market approaches the standards and practices of Western Europe, improvements in the refinery octane pool and the substitution of MTBE for lead can be anticipated.

The diesel fuel produced currently contains a maximum of 0.15 wt% sulphur. Eventually, the accepted worldwide sulphur content of diesel fuel is expected to be below 0.05 wt%. In addition, the aromatic content of both gasoline and diesel fuel products will have to be reduced to meet expected regulations and specification.

9

Environmental pollution must be reduced by better treatment and disposal of pollutants of all kinds and by reducing losses, especially vapor losses from storage tanks. Volatile products such as naphtha, gasoline and aromatic hydrocarbons are typically stored in fixed cone roof tanks. The empty, fill, empty cycle - plus thermal expansion produces a discharge of vapors into the atmosphere, causing product loss and air pollution.

Sulfuric Acid treatment, which is still widely used in lube oil and allied products manufacturing generates a large amount of polluting acid tars. Replacement of these outmoded methods as well as applications of more efficient bleaching clays is needed.

The characterization report has included in its scope the more obvious improvement opportunities identified as a result of the team visit. In order to meet future demands for gasoline and other fuels with specifications more in line with those found in western countries. Romania will be forced to make changes to its petroleum refineries. Conversion to unleaded motor fuel will require a higher pool octane. Typical processing units required to achieve higher octane are: catalytic reformer, alkylation, fluid catalytic cracking, isomerization, and dehydrogeneration. Increased capacity for the additive MTBE will also be required. The major need in Romania is to revamp existing units, especially lube oils in Pisgrotiel, improving the hydrogen balance and improving catalytic reforming unit performance.

As concern for the environment grows and wastewater regulations become more severe, additional treatment will be required for effluent water. In a similar way equipment will be required for reduction of oxides of sulfur and nitrogen discharged to the atmosphere. Initially, existing sulfur plants need to be put back into service. Most sulfur plants in the refineries are a two-stage Claus type achieving about 95% sulfur recovery. A third stage or tail gas treatment unit is required to achieve about 99% sulfur recovery and thus reduce sulfur discharged to atmosphere from this source.

The middle management of the Romanian refineries is well aware of the need for benefits and general features/aspects of energy saving programs. Several of these are in place and operating. However, the implementation of these programs was stated to generally meet with shortages of financial means and a different order of priorities resulting from goals set by top management. For example, process furnace efficiency can be significantly improved and be economically viable by installing an air preheater and more effectively controlling excess air to the burners.

Another example of significant energy savings with potential for reduced environmental impact lies in the concept of returning the boiler steam condensate from the process equipment. The normal condensate should be discarded only if or when it is contaminated and then only from the contaminating source. This approach is in contrast to the current practice wherein not over 20% is actually returned to the boiler and the return systems are not used or properly maintained. A comprehensive study for improved recovery of condensate should include provisions for first class maintenance of steam traps, selective testing of condensate, and diversion of contaminated condensate.

A different type of potential for energy saving, which also has a very definite environmental benefit, may be found in a program to install a secondary sealing system for floating roof type storage tanks. Here the energy loss represented by product loss in venting to atmosphere can be equated to the energy consumed in its production. Conservation of weathered crude components can contribute to refinery output at relatively low specific energy input.

In the environmental area, middle- and lower-level management, as well as staff personnel at the refineries, are well aware of the opportunities for emissions treatment and operational improvement. However, these opportunities appear to have had a low priority for top management and possibly for the preexisting Federal structure at the Ministry level.

A recapitulation of some of the observations as identified for improvement of operations of the petroleum refineries in Romania made by the visiting team is presented below:

Romanian refineries were designed to process a variety of crude oils. The age of the equipment in the process units is such that they will have to be evaluated technologically and economically with respect to practices at modern refineries in the West. Adaptation to competitive markets and a changed social structure reinforce the necessity for this evaluation.

The physical condition of the plant equipment, plus an absence of mechanical standards, require a large inventory of spare parts to assure continuous operation. This situation has not always been possible due to the financial requirements of inventory management so that on-stream time suffers.

The process control strategy and instrumentation can be modernized with the incorporation of advance control concepts, which in U.S. refineries has had very short payout times due to improved operations.

The potential future economic burden of large maintenance and operating staffs caused by factors noted above, could put the refineries at a disadvantage with their Western counterparts. National social programs as they may affect labor practices and thus cost need to be watched closely.

It is to the advantage of each refinery to study and improve safety practices.

Additional crude oil storage capacity should be made available. Suitable instrumentation and equipment is also required for conservation of material during feedstock and product custody transfer and storage.

Acquisition of alternative crude feedstocks will require consideration of their effects on processing units and ancillary facilities. Considerations of effects on capacity, ability to satisfy product specifications, corrosion protection, and removal of unwanted components are typical of the issues that must be addressed.

10

It may be expected that environmental regulations will become ever more stringent. Unleaded gasoline, fuel aromatic reduction, low sulfur fuel oils, and control of oxides of sulfur and nitrogen in atmospheric emissions are four examples of issues that will need immediate attention.

A. INTRODUCTION

1. OBJECTIVES

The report was prepared by the Davy McKee Corporation under the direction of the United States Agency for International Development (USAID), Washington, D.C., ENE/DR/EI, Emergency Energy Program for Eastern and central Europe, A.I.D. Contract no. EUR 0015-C-00--1011-00, Component Number 2, Petroleum Refining, Characterization.

The objective of this report is to provide data that will serve as a basis for the modernization and optimization of the economic performance of the petroleum refining industry of Romania. this report addresses the current status of the petroleum refining industry so that recommendations providing low cost economies to improve energy efficiency and environmental control at each refinery can be prepared. Following the collection of data on operating variables, equipment, and refinery impact on the environment, a computerized data base was prepared, which is the subject of a separate report.

2. SUMMARY OF FIELD ACTIVITIES

On April 30, 1991, Davy McKee Company (DMC) led a technical survey study team to Romania. This team discussed the USAID program with the Chief of the Chemical and Petrochemical Industry Department (DIChP) of the Ministry of Industry of Romania Mr. Valentin Ionita, Secretary of State and his staff. The team also visited the two largest refineries in Romania: Petrobrazi and Arpechim (Pitesti).

During the visit, the Romanian representatives were given a characterization questionnaire developed by DMC to collect detailed information from the refinery to be visited in Romania. See Appendix A for an example of the questionnaire.

In the middle of May, 1991, during a five-day briefing meeting in Chicago, two Romanian consultants and a representative of DICHP met with DMC staff. Together they discussed project outlines and details and were briefed by USAID and World Bank representatives. The consultants returned to Romania, translated the characterization questionnaire into Romanian, and visited all refineries to review each section of the questionnaire with appropriate technical managers and answer any questions.

On 15 July 1991, the DMC characterization team arrived in romania and met with technical representatives of each refinery selected for this study. The team discussed the field work with the representatives.

The characterization team consisted of A. Walinski, team leader for Romania; I. Lutz, process engineer; and S. Despa, Romanian technical consultant. The team visited ten of Romania's eleven refineries, as follows:

Refinery	Location	Site Visit Dates
Petrobrazi	Brazi, near Ploiesti City	July 15-17
Vega	Ploiesti	July 18-20
Astra	Ploiesti	July 22-24
Steaua Romana	Cimpina	July 25-27
Petrotel	Ploiesti	July 29-31
Darmenesti	Darmanesti	August 2-3
Rafo	Onesti	August 5-7
Lubrifin	Brasov	August 8-10
Arpechim	Pitesti	August 12-14
Petromidia	Navodari	August 16-20

During the visits, the characterization team reviewed and evaluated materials submitted by the refinery management. The team discussed with refinery personnel information and technical data that ranged from operating experience with process units, through the mechanical condition of equipment, to utility suply and off-site facilities. Data were gathered concerning:

a. Overall material balance
b. Energy usage
c. Crude feedstock and anticipated changes to the crude
d. Product slate and properties of individual products
e. Operation of process units and quality of control systems
f. Utility supply and consumption
g. Storage capacity for feedstock and products
h. Fire protection
i. Practice in disposal of solid, liquid, and gaseous effluents and the impact on the environment
j. Mechanical condition of refinery equipment

The Romanian counterparts showed interest, responsiveness, and a high level of professional knowledge. All items, even sensitive issues such as maintenance, housekeeping, and productivity were discussed openly, and questions were answered in a straightforward and exact manner.

At the end of the field activities, a one day debriefing session was held in Bucharest on August 22, 1991. The characterization team met with Mr. Tiberin Boteanu, Managing Director of Rafirom, the Romanian Petroleum processing holding company; members of Mr. Boteanu's staff; representatives of DIChP and individual refineries; and the representative from USAID in Bucharest. The results of the study were reviewed, and a secrecy agreement was concluded between DMC and DIChP.

3. GENERAL DESCRIPTION OF REPORT CONTENTS

This report characterizes the petroleum processing industry in Romania. There are five major and six smaller refineries in the country. The DMC characterization team visited ten of these refineries and collected the data summarized in this report. The report consists of five main sections:

A. Introduction
B. National Considerations
C. Individual Refinery Data
D. General Review of Coal use in Refinery Service
E. Appendices

Section B provides an overview of the national petroleum refining industry in Romania. The trends of the refining-product market are discussed and general opportunities for refinery improvement are presented.

The individual data in Section C is divided into subsections covering each refinery plus a brief description of the Crisana refinery as provided by Rafirom. Each subsection contains a description of process, overall material balance, description of utilities and off-sites, operating history and experiences, crude oil supply, and environmental considerations.

4. LIMITATIONS ON USE OF REPORT

The information contained herein, while detailed in nature, does not reflect all aspects of refining operations, nor all the variables, both internal and external, that affect past, present and future decision making policy. The reader and user of information contained within this report is directed to contact the individual refinery for further insights, clarifications and information as is needed.

It should also be noted that each of the refineries that was part of this study, has reviewed the report and agreed to its technical context. The conclusions contained in this report, however, are the views of the authors and do not represent the official positions of the government of Romania.

B. NATIONAL CONSIDERATIONS

1. OVERVIEW OF NATIONAL PETROLEUM REFINING INDUSTRY

1.1 National Petroleum Refineries

The petroleum refineries of Romania are:

1. Arpechim
2. Astra
3. Darmanesti
4. Lubrifin
5. Petrobrazi
6. Petromidia
7. Petrotel
8. Rafo
9. Steaua Romana
10. Vega
11. Crisana

The locations of the eleven refineries in Romania are shown on the Map, Figure No. 1. The Romanian processing capacity is approximately 33 million tonnes per year.

The capacities of the main processing units are shown in Table B.1.1.1

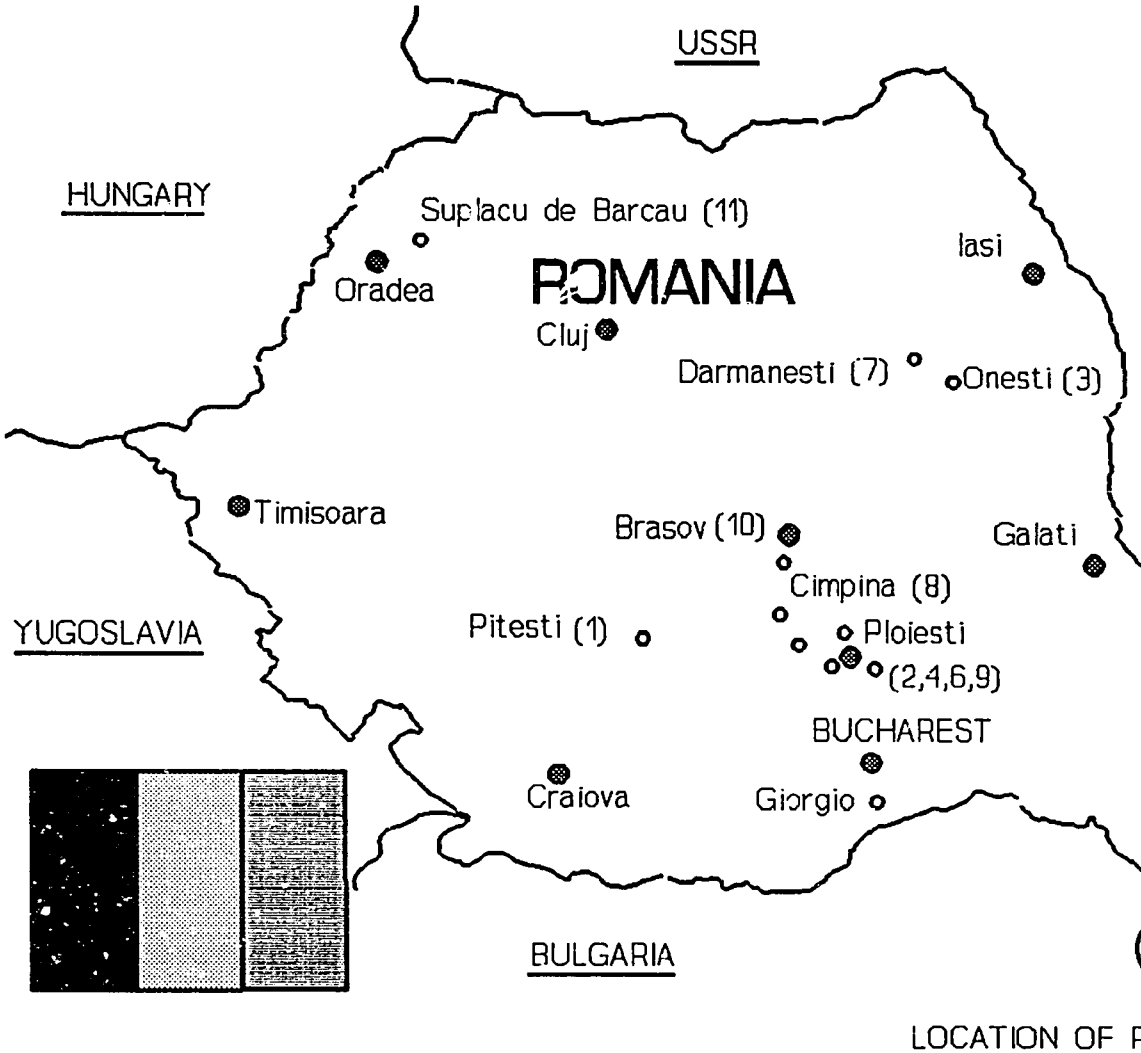

KEY

Location	Refinery Name	Refinery Capacity Tonnes/yr (Millions)
1) Pitesti	Arpechim	6.50
2) Ploiesti	Petrobrazi	7.50
3) Onesti	Rafo	5.25
4) Ploiesti	Petrotel	5.30
5) Navodari	Petromidia	3.50
6) Ploiesti	Astra	2.00
7) Darmanesti	Darmanesti	1.04
8) Cimpina	Steaua Rom.	0.40
9) Ploiesti	Vega	0.80
10) Brasov**	Lubrifin	--
11) Suplacu de Barcau*	Crisana	0.40

Showing Approximate Locations of Surveyed Refineries.
* Refinery was not visited.
**Does not process crude Produces aobut 45000 tonnes/y of high grade industrial lube and greases.

LOCATION OF ROMANIAN REFINERIES

FIGURE 1

TABLE B.1.1.1 - CRUDE PROCESSED IN ROMANIA'S REFINERIES JULY 1990 - JUNE 1991

Refinery	Design Throughput tonnes/y	Crude processed during last twelve months			
		Domestic	Imported**	TOTAL	% of design throughput
Arpechim	6 500 000	-	4 702 942	4 702 942	72.3
Astra	1 800 000	163 714	100 000	1 163 714	64.6
Crisana	400 000	400 000	-	400 000	100.0***
Darmanesti	1 500 000	570 000	150 000	720 000	48.0
Lubrifin*	(67 000)	(57 000)	-	(57 000)	(85.0)
Petrobrazi	7 500 000	3 182 500	1 240 000	4 422 500	59.0
Petromidia	3 500 000	-	2 312 385	2 312 385	66.1
Petrotel	5 000 000	1 102 629	2 046 593	3 149 222	63.0
Rafo	5 250 000	599 700	2 397 251	2 996 951	57.1
Steaua Romana	400 000	300 730	-	300 730	75.2
Vega	800 000	549 993	-	549 993	68.75
TOTAL	32 650 000	769 266	1 249 171	20 518 137	62.84

* Lubrifin does not process crude. Feedstocks are half finished, based lube stocks, imported from Steaua Romana, Astra and Petrotel Refineries.

** Total installed capacity for processing imported high sulfur content crudes is for 20 500 000 tonnes/y estimated.

*** Estimated

Petroleum processing in Romania began in the middle of the 19th century. The first true refineries were built at the beginning of the 20th century. They include the existing Astra, Petrobrazi, Steaua Romana, and Vega refineries which are still operating at their original locations.

Until World War II, the refineries grew in throughput and complexity, and by 1938 were processing 6.6 million tonnes of domestic crude. At that time, the processing units were at a competitive international level and included thermal cracking, delayed coking, thermal reforming, and phosphoric acid alkylation. The refineries were heavily damaged by allied bombing during World War II.

Between 1950 and 1955, intensive repair efforts were made. Petroleum processing in the country was controlled by the Soviet-Romanian joint venture company, Sovrompetrol. During this time, the lube oil manufacturing line was built at the Teleajen refinery (Petrotel) and the first refinery in Onesti and the Darmanesti refinery were put into operation.

In the 1960s, Romania built the first processing units based on Western technology. A catalytic reforming, aromatics extraction and BTX separation, xylene isomerization, FCC, and other unit were built at the Petrobrazi refinery. The technical "know how" and licenses for these were imported, but the basic and detail engineering was done by Romanian specialists. Seventy to eighty percent of the equipment was built in Romania and the units were erected by Romanian companies. In a parallel effort, some units for non-licensed processes such as atmospheric and vacuum distillation, gas fractionation, coking, and visbreaking were designed and erected by Romanian companies.

On this base, a refinery processing module, which consists of the following units, was established.

- atmospheric and vacuum distillation
- naphtha hydrotreating
- catalytic reforming
- aromatics extraction, BTX fractionation, xylenes, isomerization, and separation of ethylbenzenes, orthoxylenes, paraxylenes
- kero and diesel hydrotreating (hydrodesulfurization)
- FCC and gas fractionation
- coking
- fuel gas desulfurization and sulfur recovery

The module was developed and reproduced with small local variations in Pitesti (two development steps), Onesti (second processing line), Petromidia, Petrotel (second processing line) and Petrobrazi (second processing line).

Romanian processes were developed too. They included furfural extraction of gasoils for carbon black feedstock manufacturing; lube hydrotreating; hydrofinishing; kero, gas oil, and VGO hydrodesulfurization; BTX aromatics extraction using a glycol mixture as solvent; and hydrodewaxing. The Vega refinery developed and produces many catalysts at a competitive performance level. The catalysts and processes include hydrodesulfurization, hydrodewaxing, xylenes isomerization (non-metallic), and catalytic reforming (bi-metallic).

The Romanian Institute for Research, Development, and Engineering - ICITPR - has developed and implemented many processes, individual units, and refineries in Romania and abroad.

In 1991, ICITPR split into two independent companies: - ICERP S.A., Institute of Research for Refineries and Petrochemicals and - IPIP S.A., Institute for Design of Petroleum Processing Units. Both Institutes are located in Ploiesti and are components of Rafirom S.A., the Romanian Petroleum processing holding company.

The units in the large refineries, Arpechim, Petrobrazi, Petromidia, Petrotel, and Rafo, are in fair shape but they do have problems with rotating equipment, seals, metallurgy, spare parts, and operating supplies.

Other smaller refineries such as Crisana, Steaua Romana, Vega, Astra and the lube oil manufacturing line in Petrotel, have many old units. They should be evaluated to determine their remaining economic life.

1.2 Crude Sourcing

The supply of Romanian crude oil was 13.4 million tonnes per year in 1970, 9.2 million tonnes per year in 1989, and less than 8 million tonnes per year in 1990. Romanian crudes are sweet, and contain no more than 0.5 percent sulfur and 42 percent white products. Domestic crudes are usually divided into three main types: naphthenic and aromatic, intermediate, and paraffinic crudes.

Lube manufacture relies on selected crudes: Paraffinic for Petrotel and Steaua Romana and true naphthenic, for Astra. The Crisana refinery processes a local crude, extracted by underground combustion. This crude contains some unsaturated hydrocarbons and belongs mainly to the naphtenic types. Imported crudes such as Romashkino and Ural from the USSR, Libyan Sarir, Iranian blend, Kuwait, Iraqi blend, Syrian and others make up the balance of crudes processed. Most imported crudes have a medium to high sulfur content and require extensive hydrotreating. This is done in the large Romanian refineries that are able to cope with these feeds.

The supply of domestic crude oil is transported through a grid of local pipelines from the Romanian fields to the refineries. The main fields are those of Prahove in the Dâmbovita area and southern Romania which supply the Ploiesti refineries. Some crude oil is produced in Moldavia and is processed at the Dârmanesti and Rafo refineries. In the south-western Romania (Banat area, close to Timisoara), paraffinic crude is produced.

The supply of imported crude oil is typically shipped by Romanian ships of 50 000 - 150 000 d.w.t. capacity. The ships are unloaded at the Constanta harbor in the respective tank farm of the Oil Terminal Company.

Imported crude oil is sent to the refineries by pipelines and railroad. The latter is used for some heavy or paraffinic high pour point crude oils which cannot be pumped and for deliveries from small fields.

The pipeline connections for crude oil pumping are from Constanta to refineries in the Ploiesti area - Petrobrazi, Petrotel, Astra, and Arpechim in the Pitesti area.

In 1990, serious problems developed regarding the supply of crude, maintenance materials, and other imported items required for the refining industry. Crude supply difficulties were aggravated by:

1) the inability of Iraq to pay their debt to Romania in crude oil

2) the inability to obtain hard currency for supplies and maintenance items caused by national economic problems

3) the lack of toll processing agreements.

1.3 Product Slates

Romanian petroleum processing statistics are shown in Table B.1.3.1. The product slates for the design case and 1990 operations are shown in Table B.1.3.2.

TABLE B.1.3.1 - ROMANIAN PETROLEUM STATISTICS
(in thousands tonnes/y)

Product	Year					
	1950	1960	1970	1980	1985	1989
Crude Oil Domestic Production	5 047	11 500	13 377	11 511	10 718	9 179
Crude Oil Imported	—	—	2 291	15 961	14 626	21 809
Total Processed Crude Oil	5 047	11 500	15 688	27 472	25 344	30 988
Petroleum Products Obtained						
LPG	12	77	207	222	185	192
Gasoline	1 502	2 792	2 786	4 765	5 305	6 074
Kerosene (White spirit included)	736	1 289	969	868	487	512
Diesel Fuels	731	2 326	5 049	7 475	6 842	8 435
Fuel Oils	1 681	3 824	4 249	10 231	8 432	10 172
Lube Oils & allied products	125	317	606	664	572	516
Asphalts	92	249	537	671	463	471
Exported Petroleum Products						26.372
Gasoline	—	2 305	647	2 506	3 900	4 640
Diesel Fuels	—	1 286	2 548	2 483	2 771	4 681
Fuel Oils	—	1 229	1 532	3 356	2 565	3 708
Lube Oils & allied	—	231	368	297	219	126
Coke	—	14	67	106	182	162
Exports % vs processed crude	—	44	32.9	31.8	38	42.9

Source: Romanian Statistical Yearbook 1990

Note: Unaccounted product (obtained) are fuels used to operate the refinery

TABLE B.1.3.2 - PRODUCT SLATE 1990 - 1991

Processed Crude Products	Design		July 1990 - June 1991	
	tonnes/y	%	tonnes/y	%
Crude	32 650 000	100	20 600 000	100
Naphtha	2 466 000	7.5	1 554 000	7.5
Gasoline	4 913 000	15.0	3 195 000	15.4
Jet fuel	730 000	2.2	236 000	1.1
Kerosene	1 170 000	3.6	265 000	1.3
Diesel fuels	2 889 000	24.2	5 194 000	25.0
Fuel oils	9 851 000	30.2	7 326 000	35.4
Asphalts	596 000	1.8	422 000	2.0
Coke	846 000	2.6	376 000	1.8
Lubricating oils	485 000	1.5	324 000	1.6
Greases & allied products	15 000	0.05	12 000	0.06
Paraffin wax	27 000	0.08	17 000	0.08
N-paraffins	116 000	0.35	15 000	0.07
LPG	276 000	0.85	180 000	0.87
C_3-C_4	1 413 500	4.3	339 000	1.6
BTX aromatics	771 000	2.4	81 000	0.4
Coke on FCC catalyst	354 000	1.08	190 000	0.92
Losses	732 000	2.29	825 000	4.0

Note: Products manufactured in small quantities are included in the fuel oils line.

Since 1965, petroleum processing in Romania was designed to cover the internal demand for petroleum products and for petrochemical feedstocks -C3, C4, naphtha, aromatics - and to export surplus.

Under normal conditions and without considering any economic growth and by processing about 18 million tonnes of crude per year, Romania could cover its basic demand for petroleum products. However, this does not cover the demand for fuel oil where there is a deficit of 4 million tonnes. By processing 25 million tonnes of crude oil per year the demand for all feedstocks required by the petrochemical industry will be satisfied. There will be an excess of 3 million tonnes of gasoline and diesel oil, which can be exported. This will still leave a deficit of 2 million tonnes of fuel oil which must be imported.

More aromatics (and thus, increased feed to the BTX petrochemical unit), could be obtained improving the catalytic reforming performance by adding continuous catalyst regeneration (CCR) to the stacked reactor units; converting the old high pressure monometallic catalyst units to low pressure, promoted catalyst and adding more reaction volume to compensate the high Liquid Hourly Space Velocity (LHSV) and lower than design basis naphthenes potential of naphthas.

There is of course, to the extent it is used, need to be sensitive to the need to reduce/eliminate Benzene from the gasoline pool. A balance in operations in this regard is necessary.

Table B.1.3.2 shows a high yield of vacuum bottoms and a low yield of distillates. The cut point of VGO does not overpass 520°C. (In US refineries, the VGO cut point is over 550°C.) This practice has a negative impact on FCC feedstock supply, as shown in Table B.1.3.3.

TABLE B.1.3.3 - FCC FEEDSTOCK SUPPLY

	Refinery					
	Arpechim	Petrobrazi	Petromidia	Petrotel*	Rafo	TOTAL
Crude design throughput, tonnes/y	6 500 000	7 500 000	3 500 000	3 500 000	4 860 000	25 860 000
Crude processing during the last 12 months, t:	4 702 942	4 422 500	2 312 385	2 046 593	2 996 951	16 481 371
wt% from crude design throughput**	72.3	59	66.1	59.7	61.7	63.9
Total process capacity in FCC - design, t:	1 856 000	1 100 000	1 100 000	1 100 000	1 264 000	6 420 000
Total processed in FCC during last 12 months, t:	1 003 232	893 300	543 736	684 727	615 211	3 740 200
wt% from FCC design throughput	54	81	49	62	49	58
VGO processed during last 12 months +:	988 000	1 055 600	578 100	511 600	729 300	24.7
VGO potential in processed crude, wt%	21	25	25	25	25	3 862 600
VGO processed in FCC during last 12 months, t:	1 003 200	521 100	382 000	480 000	615 200	3 001 500
% from VGO potential	101.5	49.4	66.1	93.8	84.3	77.7

* Petrotel processed another 1 100 000 tonnes of domestic paraffinic selected crude. Vacuum distillates from this crude are used as base lube stocks, but not fit for FCC.

** Design throughput of crude units contributing to the FCC feedstock pool.

During the last twelve months crude processed in the unit potentially contributing to the FCC feedstock pool was 60.2 percent of the design capacity During the same period, the FCC units processed only 58 percent of their design throughput. Considering the VGO potential stated by the refineries FCC units could process about 0.85 million tonnes more feedstock, reaching 72 percent of the design throughput instead of only 58 percent and producing more gases for petrochemistry and increase octane for the gasoline pool.

MTBE could be another contributor to improved gasoline production. Building new units for MTBE production does not require high expenses as more as technology is available in the country and equipment is not sophisticated.

The catalytic cracking units can be revamped for better yields and larger energy savings. Expanders on the regenerator flue gases represent a major energy savings potential.

Product losses are high due to lack of monitoring, poor operation, and inadequate storage of volatile products. Flare losses are extremely high in many refineries. Acid treatment is used extensively causing high loses, high costs, and serious environmental pollution. Amine scrubbing operations are an area of neglect, resulting in air pollution, corrosion, and failure of air preheaters with resulting energy losses.

Intermediate products transfer between refineries is extensive. This has a negative impact on product costs and losses but also enhances flexibility in operations. This factor must be included in a national linear program study.

Lube oils and related products processing has some peculiarities. Romania had and will have for the near future, good crude resources suitable for lube oils, paraffin wax, microcrystalline wax, and related products manufacturing. During the last two decades a research and development effort was conducted to determine which technologies are best suited for the good quality products that are available. A large part of the additives for lube oils were well suited and some greases may be manufactured in the country. The local market can absorb almost all the products and easily marketed products such as transformer oil, naphthenic base stocks, and others that are available for export. In spite of these advantages, during last year the lube oils and allied products production was only 67 percent of the design value. This was due to the age of units and the technologies used for manufacturing.

The Petrotel, Steaua Romana, Astra, Lubrifin, and Vega refineries are in search of investors/partners for revamping their lube oils, additives, paraffins waxes, grease manufacturing and blending units. The Arpechim refinery has a complete line (furfural extraction, MEK dewaxing, hydrofinishing) shut down due to lack of supply of imported selected paraffinic crude (3.5 million tonnes per year required) the units are in good shape and ready to be started up in case of a joint venture for crude processing or other kind of cooperation could be achieved.

Product Transport

Petroleum product is transported as follows:

- internal petroleum product movement is through pipelines or by rail tank cars and trucks
- exported petroleum products are transported by ship from the Constanta Oil Terminal and harbor, by the Danube river from Giurgiu harbor (60 kilometers south of Bucharest, and 120 kilometers south of Ploiesti) and by rail tank cars.

The product pipelines are for gasoline, kerosene, and diesel oil from Ploiesti to Constanta - almost 300 kilometers - and Ploiesti-Giurgiu. The pipelines are small, about 6 to 10 inches in diameter. The fuel oil is transported to Constanta or Giurgiu by railway.

There are also short pipelines connecting Petromidia and the Constanta Harbor. Pipelines for liquified gases from Darmanesti to Rafo, approximately 45 kilometers, are under construction.

Several pipelines are used to pump products - gasoline, kerosene, diesel oil, LPG - from Ploiesti to Bucharest and from Pitesti to Craiova in southern Romania. There are interconnecting lines between refineries, mainly in the Ploiesti area, to transfer the intermediate products to other refineries for further processing. Pipelines are used for only a portion of the product transportation needs. The major transportation system, for the time being, is to use railway tank cars for long distances, and then transport the product from the depots to the consumers via trucks.

Table B.1.3.5 shows the importance of the railways in transporting petroleum. Railway transport, despite the disadvantages of high cost, high energy consumption levels, and great losses, represents almost half of total transportation of petroleum and its products.

TABLE B.1.3.5 - PETROLEUM TRANSPORT

Year	Pipeline		Railway		Total	
	Thousand tonnes	%	Thousand tonnes	%	Thousand tonnes	%
1980	22 485	47.3	25 024	32.7	47 509	100
1985	21 311	48.1	23 002	51.9	44 313	100
1986	24 501	50.5	24 016	49.5	48 517	100
1987	28 855	53.6	24 932	46.4	53 787	100
1988	29 199	52.9	25 969	47.1	55 168	100
1989	30 605	54.5	25 581	45.5	56 186	100

Source: Romanian Statistical Yearbook 1991

Railway transportation is done on a contract basis with the Romanian Railways. Sometimes, the lack of available railroad tank cars causes bottlenecks in the delivery and unit operations at the refineries.

The transportation of crude oil and petroleum products in Romania deserves a special study to reduce the cost and losses and to extend the pipeline grid for products shipping.

1.4 Impact on Industry of Changes in Crudes and/or Products

Since the beginning of 1990, changes in the Romanian economy have resulted in a very serious shortage of hard currency to import crude oil. The Gulf crisis and the subsequent inability of Iraq to pay in crude oil its debts to Romania and the decline in domestic crude production, have contributed to the drastic decrease of crude processing in Romanian refineries.

Table B.1.3.2 shows the quantities of crude processed by the Romanian refineries during the last twelve months prior to the collection of data for this report. In fact, some of the refineries reported data for 1990 and part for June 1990 through May 1991, but summing these data does not significantly change the picture.

Operating below their designed throughput, the refineries were forced frequently to shut down some processing units. This resulted in important product losses. The losses also have increased energy consumptions per unit of product and also have damaged the catalytic activity and the equipment.

Figure B.1.3.1 shows the pattern of domestic crude processed by Romanian Refineries since 1980, which is equal to the crude extraction. Considering 1990 as an year affected by the economical, political, and social changes and taking the 1985 to 1989 period as typical for the natural decline trend, an estimated production of 6.5 to 7 million tonnes could be expected for 1995. If the total natural (Domestic plus imports), at 18 to 20 million tonnes per year is the quantity of crude required to meet internal consumption, then Romania will import about 12 million tonnes per year for its own needs. This leaves 12 to 13 million tonnes of spare processing capacity in a country with excellent access to the Black Sea, the Middle East and Southern Soviet crude oils.

Most of the units in the large refineries are designed for processing typical Middle East crudes with a high sulfur content. As discussed in Section 1.1, a wide range of crude oils has been processed in the major refineries. There should be no problem with continuing to obtain crudes of design quality or better, provided hard currency is available.

Several of the small refineries like Astra require crudes which contain low pour point distillates which do not require dewaxing in order to produce low pour point products. Petrotel and Steaua, Romania require selected paraffinic crudes suitable for high viscosity index (H.V.i.) lube oils manufacturing. These refineries depend on maintaining or increasing the productions of the domestic fields that produce these crudes; the supply of imported crude oils of suitable quality; or changes in the processing scheme. The importation of suitable crudes requires that they be batched through the crude lines in a matter which would result in little crude mixing or that they be transported by rail.

As discussed in Section B.1.3, increased throughput at the refineries depends on the balance between the internal consumption of fuel oil and petrochemical feedstocks and exports. Export products usually are required to meet lower sulfur specifications than those now produced. The immediate low cost solution to this problem is to process low sulfur content crudes for the export products, as required to meet a particular specification. For the usual toll processing agreement, the client will supply the crude to be processed. The refineries have limited flexibility to produce low sulfur products from high sulfur crudes at high operating rates; at low operating rates, there may be enough vacuum gas oil hydrodesulfurization capacity to allow lower sulfur products to be produced by indirect desulfurization.

To meet future octane demands, continuous catalyst regeneration (CCR) catalytic reformers are being considered. If CCR reformers are installed, the existing catalytic reformers could be converted to isomerization units. Another option includes the revamp of the catalytic cracking units to improve yields and capacity, this would increase the availability of a high octane gasoline component. An increase in MTBE production is another possibility. The potential exists for using available isobutylene for units in new locations. The sale or use of low octane naphtha would result in an increase in the pool octane and is another possibility. The alkylation unit at Petrotel is not operating. It should be repaired from the standpoint of economics and gasoline octane. All of the above possibilities must be considered in a national linear program for optimization.

1.5 Observations of Markets - Internal and External

For the local markets, the sulfur content of all the products is higher than typical international standards. The sulfur content for gasoline is 0.1 percent, diesel is 0.5 percent, and residual fuel oil is up to 4.5 percent. Products made for export and for processing agreements have a lower sulfur content as required by contract. Sulfur contents for the national markets will be lowered as hydrogen balance and economic conditions permit.

Expansion of the internal market for petroleum products depends on economic and political stability. There is a considerable amount of unused refining and other industrial capacity in the country. It is difficult to forecast the future markets for national and export petroleum products.

Some toll processing agreements have recently been concluded involving capacity expansion and improvement in efficiency, with the client paying for these improvements in return for a long term contract. Petromidia is located on the Black Sea, it has recently obtained toll processing agreements to produce export products and is well situated for such contracts. A pipeline connects the large refining center of Ploiesti and Pitesti to the coast and makes these refineries attractive for the export markets.

1.6 Comparisons with International Trends

Basically, the structure of the Romanian petroleum processing industry is located between USA and Western Europe refineries. The Nelson complexity index value is eleven. The FCC and catalytic reforming capacities represent 19.6 and 14.8 percent respectively of the total processing throughput. About 75 percent of the processing potential is located in modern integrated refineries that have been built up since 1965. About two thirds of the units are able to process high sulfur imported crude.

The small old refineries rely on old, worn, and low efficient equipment but are well positioned in the market, good sources of domestic crude, and opportunities to become specialized in the manufacture of marketable products like needle coke, hydrocarbon solvents; transformer, white, and low pour point lubricating oils; and asphalts.

The large refineries are associated with petrochemical complexes. About 6.7 percent of products can be used as petrochemical feedstocks (naphtha, C_3-C_4 hydrocarbons, aromatics). If the demand is low the petrochemical feedstocks can be shifted to the commercial products pool, and used for gasoline and LPG.

However, some changes and improvements to the process units operation and product slate need to be made to meet both internal and international market demands. More octanic components are needed to produce unleaded, limited aromatics content gasolines. These changes and improvements will require new MTBE units, restarting the alkylation unit, and upgrading the gasolines.

Competitive diesel fuels contain less sulfur than those currently produced by the Romanian refineries. Therefore desulfurization could be increased provided sufficient hydrogen is available. Improved catalytic reforming performance, better purification of hydrogen produced by methane conversion and the use of all the potential sources as pyrolysis gases, purge streams, and others will help to increase the amount of available hydrogen.

The sulfur and heavy metals content in the fuel oils is and will be a problem due to the high investments needed to improve fuel oil quality. As the major part of the fuel oil will be consumed in the country, flue gas treatment could be a solution for the future for use at power plants.

Lube oils and allied products manufacturing need special attention due to the age of the technologies used and the units. Revamping of the base process units, blending facilities and additives manufacturing units need substantial investment.

The efficiency and competitive capability of the refineries acting now as independent companies on a free market is controlled by energy consumption, productivity, and maintenance. In these fields, Romanian refineries operate below international standards and practices, as well as in computerized optimization of operations. Forward progress is urgently needed.

The lack of maintenance and modernization was caused by a long term policy of suppressing all imports and a mis-directed "self-reliance" policy that was practiced by the late government. The people are well educated and the technology base exists for rapid improvement with some economic assistance.

Romanian refineries are also operating below international levels in matter of environment protection. This is a serious problem as most of the refinery locations are close to important residential areas.

1.7 General Potential and Opportunities for Improvement

There is a great potential for improvement in the petroleum refining industry. Some of the major steps, other than those outlined above are:

- Install expanders on the fluid catalytic crackers.
- Improve scheduling to permit longer runs, thus reducing equipment failure, maintenance, and hydrocarbon losses.
- Optimize the crude selection, operating conditions, catalyst selection and use, transfer of products between refineries, and other aspects of the industry through use of linear programming.

- Study the lube refining operations in detail; revamp or shut down some of the small lube refining operations and use the facilities for blending and distribution centers.

- Use the existing air preheaters and economizers; improve the amine units and desalters; and make new additions where warranted.

The importance and urgency of reducing losses needs to be stressed. It is an opportunity to reduce operating costs, not to mention the impact on environment of these hydrocarbon emissions.

1.8 Observed General Problems and Trends

Some Romanian refineries have adopted a maintenance strategy which monitors the condition of equipment while it is in operation. This reduces unnecessary shutdowns, prevents failures while operating, and ensures spare parts as required. It is anticipated that these procedures will be adopted by other refineries as funds for measurement, computers, and other required equipment become available.

Better scheduling, monitoring, and control of operations is required. The refineries located in the Ploiesti area are interconnected by a pipeline network which offers opportunities for associated and coordinated crude processing; reducing the number of shutdowns and energy consumption and increasing productivity. Similar solutions could be applied to the Darmanesti and Rafo refineries.

A better use of the crude storage capacity, which is about a half of that used by Western Europe and USA refineries, would help to increase processing efficiency.

1.9 Environmental Considerations

Environmentally, the refineries are not exerting the proper vigilance, even where facilities are available due to the shortage at some chemicals and spare parts. Extensive improvements can be made in order to reduce flaring; reduce the amount of hydrogen sulfide burned; dump oily wastes into land fills; burn sulfuric acid tars; and improve other unsound practices. These steps would require little or no investment. Other steps, such as reducing emissions from tanks, would require a modest investment. Most of the steps outlined above, would not only decrease the level of current emissions but would also increase profits and pay back investment costs in a short time frame.

Water usage and the quality of the waste waters is an area that can be greatly improved. Cleaning out the API separators more frequently, reducing oil leakage into the cooling water, returning more condensate for reuse, and other steps do not require significant investments.

1.10 The Romanian Petroleum Refining Holding Company

In Romania, the petroleum refining sector plays an important role within the economy of the country. The Government is interested in improving the industry and attracting foreign investment capital.

To improve the refinery organization and the logistics of supply, processing, and distribution of products while looking for future development, the Romanian Petroleum Refining Holding Company (RAFIROM) was established in 1991. This shareholding company includes:

- All eleven refineries - four are integrated with petrochemical complexes (Petrobrazi, Petrotel, Arpechim, and Petromidia) and a fifth refinery (Rafo) that is closely linked with a petrochemical plant.
- PETROL EXPORT IMPORT, S.A. - an organization involved in import and export of crude oil, petroleum products, petrochemicals, and related services.
- OIL TERMINAL S.A. - a company involved in crude oil shipment.
- PECO S.A. - a holding company involved in petroleum products distribution and trading
- Seven companies involved in all aspects of plant construction and maintenance as well as spare parts production for existing facilities.
- ICERP S.A. (Romanian Research Institute for Petroleum Processing and Petrochemicals) - this organization develops new processes and products to improve the existing situations and to make better use of raw materials and by-products.
- IPIP S.A. (Romanian Engineering and Design Institute for Oil Refineries) - This institute develops process design, design engineering for petroleum processing units, integrated refineries, equipment, and erection. It also cares for the design of modernization of existing equipment and facilities and researches refinery economics, training requirements, energy conservation, pollution abatement, and a variety of other refinery related topics.

RAFIROM S.A., by government decree, is tasked with the following duties:

- Establish a general processing strategy based on studies of the international and domestic market.
- Coordinate the import of crude oil and related raw materials and the export of petroleum products and petrochemicals.

- Coordinate research, development, and engineering activities.
- Optimize the supply, production, and distribution and marketing programs.
- Conduct financial and banking operations in behalf of commercial petroleum refining and petrochemical companies.
- Provide technical assistance in law, marketing, finance, and banking activities.

Currently, the refineries and petrochemical plants are state companies based on a shareholding system. The government is considering privatization so that future owners could be the Romanian state, individuals, and private companies.

1.11 Coal Utilization in Refineries

One of the components of this study of Romanian refineries is a consideration of substituting coal for hydrocarbons as a source of energy. Such solution does not appear viable.

Romania produces coal in smaller quantities than neighboring countries like Poland. Almost 85 percent of the main coal mined is low quality lignite. The heating value is only 1 500 kcal/kg. The ash of the dry coal is 60 weight percent. The moisture content of mined lignite is almost 45 weight percent; the sulfur content is 1.5 weight percent which on dry coal averages 3 weight percent. Electric power stations, the users of lignite, complain about the lignite quality which must be supplemented by fuel oil for proper burning. Also, lignite utilization leads to low efficiency, severe corrosion of equipment, plugging by ash and sulfur deposits, pollution, handling and burning problems, and residual ash disposal problems.

In 1989, lignite supplied 31.7 percent of the fuel for electricity in Romania, gas supplied 45.7 percent, liquid fuel oil supplied 13.7 percent, and coal and other fuels supplied the balance. Although there are difficulties in using coal and lignite in power plants, its use when mixed with residual oil or petroleum coke in boilers with flue gas scrubbers or in fluid bed combustion units should be investigated.

The potential to use of coal as a fuel for process heaters at a refinery is extremely low. Refinery fuel fired equipment can easily use natural gas or fuel oil. modifications for coal use reflects a major capital investment that is unlikely to occur.

2. BASIS FOR SPECIFIC EXCLUSIONS

Out of the eleven refineries in Romania, ten refineries were visited by the Characterization Team. The Crisana refinery was not visited but a short report and block flow diagram is included.

The characterization effort was limited to the refineries only. No petrochemical u its within the complexes were included in this report.

C. INDIVIDUAL REFINERY DATA

1. ARPECHIM S.A. - PITESTI, ROMANIA

Address:

Arpechim S.A.
B-dul Petrochimistilor, 127
Pitesti, Romania

Telephone: 32295
Telex No.: 18236
Telefax No: 32295

Contact: Gheorghe Stanciu
Technical Director

1.1. Summary Description of Refinery

Arpechim S.A. is a company that operates in both the petroleum processing and petrochemical industries. The Arpechim refinery produces gasoline, diesel fuel, LPG, fuel oils and asphalt as well as petrochemical feedstocks. All capital belongs to the Romanian state and could be transferred to the private sector according to the law of privatization. The refinery has a lube oil plant which is not in operation at this time.

The refinery and the petrochemical units are located in central-south Romania near the city of Pitesti, which is 110 kilometers west of Bucharest. The location is shown in Figure No 1.

The refinery was built in two phases during the 1970s. It is based on two atmospheric and vacuum distillation units that are able to process 3.0 to 3.5 million tonnes of crude per year. The refinery was designed to process Iranian crudes that are blended 50 percent light and 50 percent heavy. It produces petroleum products and feedstock for the petrochemical industry.

Figure No. 2 shows the block flow diagram for refinery line 1.
Figure No. 3 shows the block flow diagram for refinery line 2.

The hydrogen generators, ethylmercaptane, and lube blending units are not shown in the block flow diagram. Table C.1.1.1. shows the process units for both lines along with design capacities and licensors.

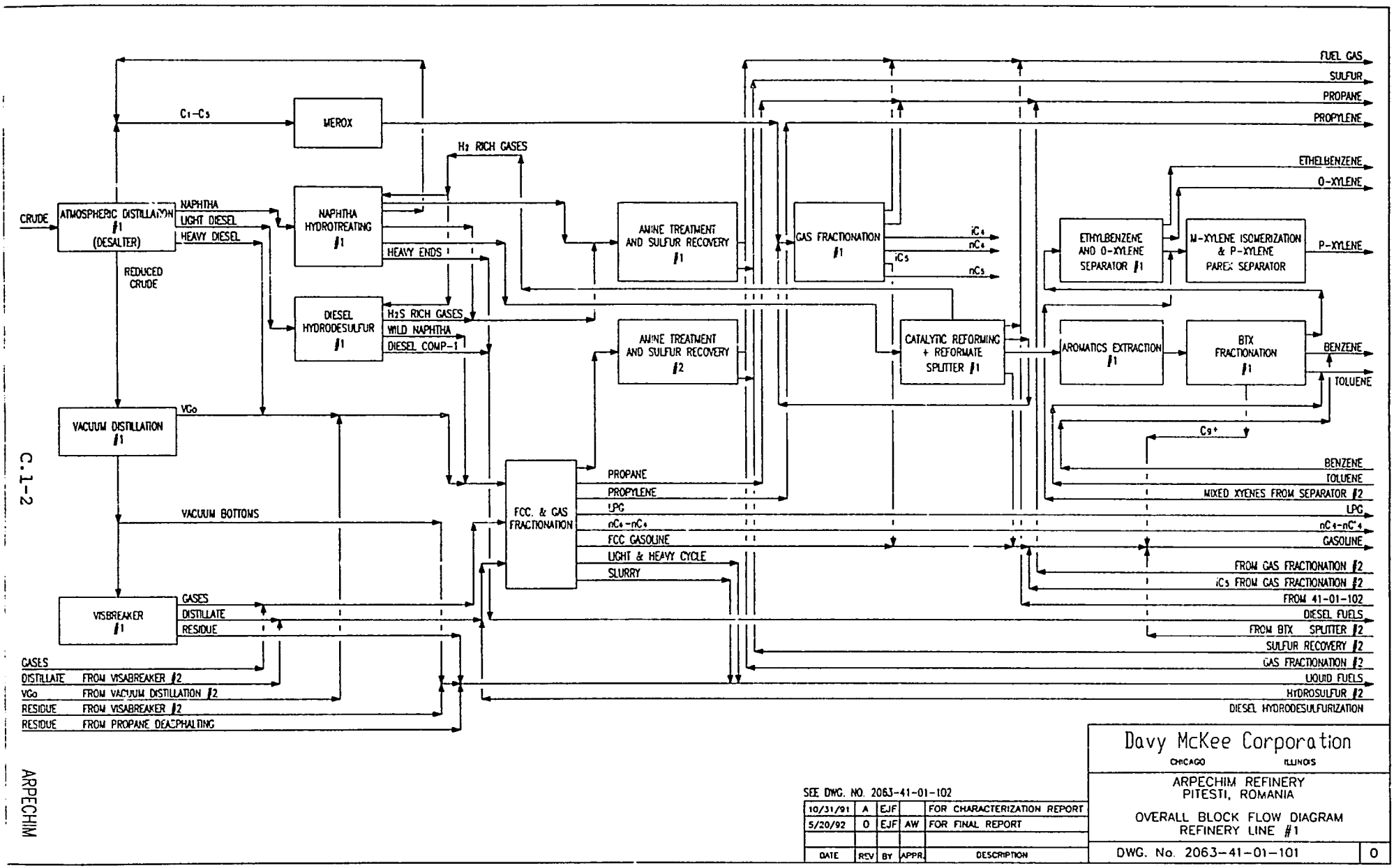

SEE DWG. NO. 2063-41-01-102

DATE	REV	BY	APPR.	DESCRIPTION
10/31/91	A	EJF		FOR CHARACTERIZATION REPORT
5/20/92	0	EJF	AW	FOR FINAL REPORT

Davy McKee Corporation
CHICAGO ILLINOIS

ARPECHIM REFINERY
PITESTI, ROMANIA

OVERALL BLOCK FLOW DIAGRAM
REFINERY LINE #1

DWG. No. 2063-41-01-101 | 0

FIGURE 2

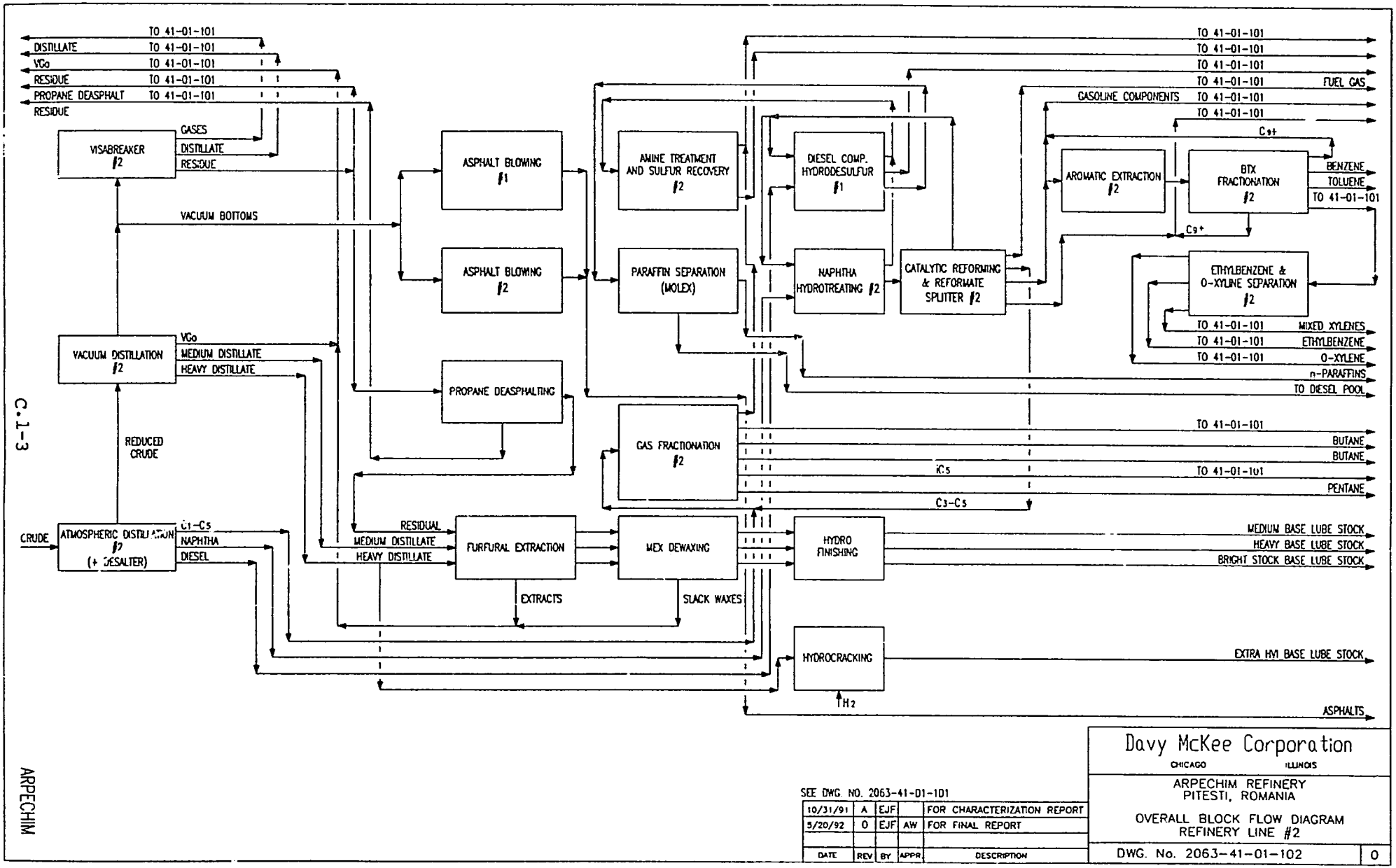
TO 41-01-101
DISTILLATE
VGo
RESIDUE
PROPANE DEASPHALT RESIDUE
VISABREAKER #2
GASES
DISTILLATE
RESIDUE
VACUUM BOTTOMS
VACUUM DISTILLATION #2
VGo
MEDIUM DISTILLATE
HEAVY DISTILLATE
REDUCED CRUDE
CRUDE
ATMOSPHERIC DISTILLATION #2 (+ DESALTER)
C1-C5
NAPHTHA
DIESEL
ASPHALT BLOWING #1
ASPHALT BLOWING #2
PROPANE DEASPHALTING
RESIDUAL
MEDIUM DISTILLATE
HEAVY DISTILLATE
FURFURAL EXTRACTION
EXTRACTS
AMINE TREATMENT AND SULFUR RECOVERY #2
PARAFFIN SEPARATION (MOLEX)
GAS FRACTIONATION #2
MEX DEWAXING
SLACK WAXES
DIESEL COMP. HYDRODESULFUR #1
NAPHTHA HYDROTREATING #2
CATALYTIC REFORMING & REFORMATE SPLITTER #2
HYDRO FINISHING
HYDROCRACKING
H2
GASOLINE COMPONENTS
FUEL GAS
C9+
AROMATIC EXTRACTION #2
BTX FRACTIONATION #2
BENZENE
TOLUENE
ETHYLBENZENE & O-XYLENE SEPARATION #2
MIXED XYLENES
ETHYLBENZENE
O-XYLENE
n-PARAFFINS
TO DIESEL POOL
BUTANE
iC5
PENTANE
C3-C5
MEDIUM BASE LUBE STOCK
HEAVY BASE LUBE STOCK
BRIGHT STOCK BASE LUBE STOCK
EXTRA HVI BASE LUBE STOCK
ASPHALTS
SEE DWG. NO. 2063-41-01-101
10/31/91 A EJF FOR CHARACTERIZATION REPORT
5/20/92 0 EJF AW FOR FINAL REPORT
DATE REV BY APPR DESCRIPTION
Davy McKee Corporation
CHICAGO ILLINOIS
ARPECHIM REFINERY
PITESTI, ROMANIA
OVERALL BLOCK FLOW DIAGRAM
REFINERY LINE #2
DWG. No. 2063-41-01-102
0
ARPECHIM
C.1-3
SECTION C.1

FIGURE 3

The refinery product slate includes LPG, regular RON 90 unleaded gasoline, diesel fuel, lube oils base stocks, fuel oils, asphalts, and feedstocks for petrochemical processing (propane, propane, i and n butanes and butenes, sulfur, ethylmercaptane, benzene, toluene, ethylbenzene, p-xylene, o-xylene, normal paraffins for animal food manufacturing). The overall material balance, including comments on losses, is discussed in Section C.1.4. Product specifications are shown in Tables C.1.9.1. through C.1.9.5., Section C.1.9.

TABLE C.1.1.1 - PROCESS UNITS

No.	Name of the Unit	Design Capacity tonnes/yr	Licensor
1	Atmospheric Distillation #1	3 000 000	ICERP
2	Atmospheric Distillation #2	3 500 000	ICERP
3	Vacuum Distillation #1	1 335 000	ICERP
4	Vacuum Distillation #2	1 665 000	ICERP
5	Visbreaking #1	500 000	ICERP
6	Visbreaking #2	500 000	ICERP
7	FCC	1 856 000	UOP
8	Naphtha Hydrotreating #1	620 000	ICERP
9	Naphtha Hydrotreating #2	620 000	ICERP
10	Catalytic Reforming #1	500 000	ICERP
11	Catalytic Reforming #2	500 000	ICERP
12	Aromatics Extraction #1	220 000	ICERP
13	Aromatics Extraction #2	220 000	ICERP
14	BTX Separation #1	80 000	ICERP
15	BTX Separation #2	80 000	ICERP
16	Xylenes Superfractionation #1	30 000	ICERP
17	Xylenes Superfractionation #2	30 000	ICERP
18	Gas Fractionation #1	170 000	ICERP
19	Gas Fractionation #2	170 000	ICERP
20	Gasoil Hydrodesulfurization #1	900 000	ICERP
21	Gasoil Hydrodesulfurization #2	1 020 000	ICERP
22	Amine Treatment & Sulfur Recovery #1		Claus
23	Amine Treatment & Sulfur Recovery #2		Claus
24	Amine Treatment & Sulfur Recovery #3		Claus
25	N-Paraffins (Molex) Separation	535 000	UOP
26	m-xylene Isomerization	160 650	ICERP
27	p-xylene (Parex) Separation	27 000	UOP
28	Propane Deasphalting	336 000	ICERP
29	Furfural Extraction	415 000	ICERP
30	MEK Dewaxing	240 000	ICERP
31	Lube Hydrotreating	183 000	ICERP
32	Lube Hydrofinishing	80 000	ICERP
33	Asphalt Blowing #1	400 000	ICERP
34	Asphalt Blowing #2		ICERP

1.2. Utilities, Services, Offsites

Electricity generation and distribution

Arpechim does not have on-site power generation capabilities. It imports power from the national network at both 6 kV and 110 kV. The 110 Kv power is converted to 6 kV at a stepdown station consisting of three transformers of 4 MVA each. Stepdown transformer stations of 6 kV/0.4 kV are supplied by underground double-feeding copper cables. This ensures distribution through all 14 substations. All consumers are equipped with short-circuit and load shedding systems.

Steam generation and distribution

The refinery's boiler house generates steam at 1.6 MPa and 250 °C using three Romanian-built Vulcan boilers and three German-built Babcock boilers. The Vulcan boilers burn gas and have a capacity of 105 tonnes of steam generation per hour each. The Babcock boilers burn either gas or liquid fuels and have a capacity of 100 tonnes of steam generation per hour each. Local consumptions at smaller pressures are equipped with pressure reducing devices.

Low pressure steam is generated at about 0.4 MPa through heat recovery in the process units and is used as stripping steam or as a tank heating agent. Part of the recovered heat is used as hot water for residential heating in the neighboring areas of Pitesti city.

Condensate collection

Condensate is collected internally from the boiler house, the process units, and the tank farm Due to contamination in some heat exchangers only 40 to 45 percent of the steam consumption comes back as collected, reusable condensate.

Fuel supply

The process units use refinery fuel gas and natural gas supplied by the national network. Approximately half of the boiler house fuel consumption is supplied as liquid fuel.

The natural gas from the national network is more than 99 percent methane and is sulfur free. The typical composition of the refinery fuel gas is:

Component	Vol. %
H_2S	0.12
CO	0.30
C_1	81.50
C_2	10.60
C_3=	1.78
C_3	3.75
iC_4	0.43
nC_4	1.30
iC_5	0.12
nC_5	0.10
TOTAL	100.00

Fuel oil is burned in the boiler house. The typical composition of the refinery fuel oil is:

Type	300/505
Viscosity cst/max., at: 50 °C	2100
100 °C	140
Pour Point °C, max.	50
Flash Point, °C, min.	100
Water, %, max.	1.0
Total solid impurities, %, max.	1.5
Conradson carbon, %, max	25
Ash, %, max.	.5
Sulfur, %, max.	4.5
L.H.V., Kcal/kg, min.	9200
Metals (Vn + Na) ppm, max.	350

Fresh water supply

Drinking water is supplied from the Pitesti city water system.

Water treatment and distribution

Process water is settled, then subjected to flocculation/sedimentation and filtration prior to use. The cooling water is pretreated at the petrochemical plant.

The raw water is river water that is pumped from two accumulation lakes -Prundu and Golesti. It is filtered on sand filters and pH adjusted prior to use. The total raw water consumption is approximately 9 000 cubic meters per hour for boiler feedwater preparation in the circulating cooling water systems.

Boiler feedwater is prepared at a rate of 450 to 600 cubic meters per hour from filtered raw water using ion exchangers; the pH is adjusted by adding ammonia; and the dissolved oxygen is reduced by adding hydrazine. Boiler feedwater is oil free; the conductivity level is below 100 micro Siemens per centimeter; the total hardness is below 0.1 dpm degrees; and the pH is approximately 8.5.

Cooling towers

Circulating water is cooled in two groups of cooling towers. The towers are hyperbolic with natural draft and are packed with asbestos cement plates. The circulated cooling water is processed at 55 000 cubic meters per hour with an average temperature difference of 10 °C, between 35 °C inlet and 25 °C outlet. The cooling tower performance depends on the seasonal ambient temperature.

Crude oil receiving

Imported crude is shipped approximately 400 kilometers via two pipelines from the Constanta terminal. The crude is stored in five floating roof tanks, each with a capacity of 50 000 cubic meters; in two fixed roof tanks, each with a capacity of 31 500 cubic meters; and in one fixed roof tank with a capacity of 20 000 cubic meters. The total crude storage capacity is 333 000 cubic meters. This provides fifteen days of operation at the refinery's maximum capacity.

Feedstocks other than crude, chemicals, and additives are shipped by railroad and are handled through three unloading racks able to transfer 1 800 tonnes of feedstocks, 1 000 tonnes of chemicals and 500 tonnes of solvents and additives per day. Suitable storage rooms are available.

Product blending and shipment

Final products are delivered by rail or pipeline with lube oils and n-paraffins shipped by rail. The other products are split between the rail and pipeline systems.

The main petroleum products, which include gasoline, diesel, and fuel oil, are blended in tanks, using components that come from the process units. These products are exported via railroad tanks.

An in-line blending unit is available for lube manufacturing, and it operates at about a third of its production capacity.

Some petrochemical feedstocks are transferred via pipeline to the neighboring petrochemical works. The aromatics are shipped via railroad tanks. Asphalts are shipped in railway tanks. Five loading racks are available to handle the following:

aromatics	180 tonnes per day
LPG	240 tonnes per day
gasoline	3 700 tonnes per day
diesel fuel	4 400 tonnes per day
lube oils and n-paraffins	1 100 tonnes per day
fuel oils	9 200 tonnes per day

Tank farm

The intermediate products are stored in tanks that serve as feed vessels for the next processing unit. The tank farm has sufficient capacity to store fifteen to twenty days of product, if run at the near maximum capacity of the refinery. Storage capacities for final products are shown in Table C.1.9.6., Section C.1.9.

Flares, blowdown and dropout systems

There are five elevated flares, each about 32 meters high with a 0.92 meter tip diameter. A 10 000 cubic meters gas holder, three compressors with a total capacity of 6 500 Nm^3/h, and knock-out drums are used to recover gases from the flare network and recycled into the refinery fuel gas system.

Fire protection

The refinery has its own fire fighting squad. Water and foaming agents, available in fixed systems, protect the tank farms, the loading and unloading racks, the API separators, and the process units. Water, inert gases such as carbon dioxide and nitrogen, and foaming agents loaded on fire trucks are also available for fire fighting. Water hydrants capable of spreading water at 1.0 MPa, are installed in 145 locations around the process units and along the roads.

The refinery fire fighting squad may receive additional help from the military fire fighting units stationed in Pitesti city, which is less than 10 kilometers away. Fire fighters from the neighboring oil fields, which are about 20 to 30 kilometers away, are also available to help.

1.3. Chemicals and Catalysts Use

The refinery uses chemicals for a variety of operations. Chemicals are used to treat raw water, boiler feed water, and waste water; to demulsify crude; to inhibit corrosion; and for many other purposes. Chemicals are also used as absorbents for air drying and as catalysts for the process units. The chemicals and catalysts used at the Arpechim refinery are shown in Tables C.1.3.1. and C.1.3.2.

TABLE C.1.3.1. - CHEMICALS

Function	Name	Supplier
Crude Demulsifier (Desalting)	E96	Petrobrazi,
Corrosion Inhibitor	Incor 103P	ICERP,
Corrosion Inhibitor	Anticor C.2	ICERP,
H_2S Absorbent	MEA	Petrobrazi,
H_2S Absorbent	DEA	Petrobrazi,
Reforming Catalyst Activator	Dichloretane	Local market
Parex Desorbent	Paradeb	UOP
Parex Desorbent	Isooctane	Local market
Selective Solvent for Aromatics	P.G. 200	Petrobrazi,
Oxidation Inhibitor	Kerobit	Imported
Oxygene Consumer in BFW Treatment	Hydrazine	Local market
Ion Exchanger Regeneration	Caustic Soda	Local market
Water pH Adjustment	Ammonia	Local market
Ca^{2+} Precipitator in BFW	Na_3PO_4	Local market

TABLE C.1.3.2 - ABSORBENTS AND CATALYSTS

Function	Name	Supplier
Diesel Desulfurization	23-R-14	Vega
Diesel Desulfurization	23-R-15	Vega
Naphtha Hydrotreating	23-R-16	Vega
Naphtha Hydrotreating	Kontakt 8200	Leuna Werke, Germany
Catalytic Reforming	24-R-12	Vega
Lube Hydrocracking	Hydrocracking 1st stage	Vega
FCC	DA-250	Imported
Sulfur Recovery	Claus type	Vega
Aromatics Saturation (N-Paraffin)	H-8	UOP
N-Paraffins Separation Ads.	Molecular sieve type 5A	UOP
P-Xylene Separation Absorbent	Molecular sieve for p-xylene separation	UOP
Ion Exchanger for BFW Treatment	Vionit C53 Vionit AS14 Doulite A268FR Vionit AT1	Local Market

1.4. Previous 12-month operating history

During the period of 1 July 1990 to 30 June 1991, the refinery processed 4.8 million tonnes of crude oil, which is 73.6 percent of the design capacity of 6.5 million tonnes per year. The reduced capacity is due to many factors, including difficulties in the crude supply which resulted in frequent shutdowns and start-ups of the process units. In addition, the lack of natural gas during the winter, the reduced inventory of spare parts, and the poor quality of the cooling water all exerted a negative impact on normal refinery operations and unit performance.

The high percentage of loss of the processed feedstocks (more that 3.1 percent) is partially a result of frequent interruptions in operation. Other factors, such as vapor losses, oil in the waste water, low accuracy measurements of crude and products quantities, and the low performance of gas recovery from the flare system complete the picture.

A very rough evaluation of the refinery operations shows that reducing the processed feedstock losses from 3.1 percent to 1.5 percent will save more than $10 million in one year, if operating at 5 million tonnes throughput capacity. This estimated sum is large enough to warrant investments in loss prevention programs.

Table C.1.4.1. shows the overall material balance of the refinery during the period of 1 July 1990 to 30 June 1991.

TABLE C.1.4.1. - MATERIAL BALANCE

Feed/Product	Tonnes/Year	
	Design	July 1990 - June 1991
Inputs		
Crude Oil	6 500 000	4 702 942
Steamcracking Gasoline		55 250
Aromatics Concentrate (steamcracking)		10 422
Mixed Xylenes		2 894
Light Gasoline from Crude Fields		5 169
Others		6 324
Total In	6 500 000	4 783 001
Outputs		
Fuel Gas	179 200	180 993
Propane	111 400	16 942
Propylene	34 800	24 066
LPG	127 000	51 604
i-butane	28 000	2 870
n-butane	91 000	47 348
nC_4-nC_4^1	64 100	3 737
n-pentane	108 000	-
Sulphur	-	1 765
Gasoline	1 134 000	721 928
Naphtha	421 000	434 585
Diesel Fuel (Kero Included)	1 792 000	1 165 925
Fuel Oils	1 733 000	1 781 550
Asphalts	na	24 951
Slope	na	1 751
N-Paraffins	100 000	11 166
Base Lube Stocks	175 200	17 384*
Coke on catalyst	130 000	71 059
Benzenes	32 000	15 035
Toluene	53 000	38 749
O-Xylene	7 000	3 683
P-Xylene	27 000	7 500
Ethylbenzene	4 800	4 508
Mixed Xylenes	-	3 404
Losses	130 000	150 498
Total Out		4 783 001

* Deasphalted oil, exported to Petrotel Refinery for bright stock manufacturing.

1.4.1. Recent Modifications

The refinery management is working toward improving the crude oil supply. In addition, the refinery is taking steps to re-start the lube hydrocracking unit.

1.4.2. Crude Oil Supply

Due to the shortage of hard currency at the national level, the refinery was forced to process 19 different types of crudes. This resulted in lost opportunities to optimize the operating programs. Table C.1.9.7., Section C.1.9. shows a list of crudes processed in the last 12 months and some of their properties.

1.4.3. Operating Experiences

The refinery experienced inconsistencies in the quality and quantity of the supply of crude oil. These inconsistencies resulted in both financial losses and operational difficulties. The refinery had no relevant accidents of any kinds during the last 12 months, which is remarkable considering the number of shut downs and start-ups. Personnel and staff are skilled, and the company pays attention to work security.

Additional comments regarding the process units operation over the past 12 months include:

- The lack of attention paid to the performance level of the hydrogen sulfide removal units and the high sulfur concentration in fuel gases causes corrosion, fouling of the furnace air preheaters, and increased air pollution.
- The poor quality of the cooling water sharply diminishes heat transfer efficiency. This provides poor cooling in some very important units such as atmospheric and vacuum distillation, gas fractionation, and the FCC. These problems are especially evident during the summer.
- Most of the furnaces run at low efficiency due to the use of high excess air.
- The shortage of natural gas in the winter makes it difficult and in some cases impossible to operate some of the units.

1.4.4. Impact of Crude Oil Changes

The refinery has a problem with inconsistencies in the crude oil supply. It currently uses a large number of different crudes and, as a result, must frequently change the type of processed crude. This makes it practically impossible to reach an optimum level of performance in terms of yields, product quality, and energy consumption.

One possible way to stabilize the crude supply is to look for more opportunities to process crudes for third parties on a medium or long term contract basis. The refinery is sufficiently flexible and has enough good feed and product shipment facilities to perform this kind of operation while still supplying the local market.

1.4.5. Impact of Product Market Changes

Due to its structure, the refinery is flexible enough to adjust to changes in market demand. The FCC unit is key to the balance between gasoline, petrochemical feedstocks, and fuel oil demand. However, the viscosity balance in fuel oil blending is limited; a possible increase in flexibility could be reached by improving the performance of the two visbreaking units.

Demand for asphalts is projected to increase in the near future due to ambitious road building plans within the country. This demand may be satisfied by more intensive use of the two existing blowing units.

The refinery has additional reserve capacity for the production of lube oil. This line was shut down six years ago based on centralized planned economy politics regarding the importation of selected paraffinic crudes suitable for lube manufacturing.

1.4.6. Impact of Legislation and Social Changes

The Romanian Parliament adopted a package of laws that form the basis for the transition to a market oriented economy. This legislation allows foreign companies the opportunity to operate in Romania in any kind of trade. Based on these laws, the refinery must seek to improve its crude supply. One way may be to process selected paraffinic crudes suitable for lube oil manufacturing and to start up the lube production line. A possible cooperative relationship between Arpechim and Burmah Castrol to produce high viscosity index base lubes and to develop on this base a high grade lube oils manufacturing capability.

The integration of Arpechim S.A. into the new holding company, RAFIROM, could help solve the problems connected with the crude oil supply policy.

Regarding social problems, the refinery is faced with an oversized staff that makes it less competitive. The staff will need to be gradually reduced while diminishing and relieving unemployment problems.

1.5. Environmental Considerations

1.5.1. Quality of Local Environment

The refinery is located close to Pitesti city and is part of a petrochemical complex. Generally, the air, water, and ground pollution levels are high. Fortunately, due to the direction of the prevailing winds, vapor emissions are not carried into the city.

1.5.2. Current Emissions Control

Gaseous effluents

Stack gases, flares included, are not treated, and consequently the process units of the refinery contribute about 10 000 tonnes of sulfur dioxide per year to the air pollution levels in the zone. Another 40 000 to 50 000 tonnes per year of sulfur dioxide are released into the atmosphere with the stack gases that are generated by the boiler house and the neighboring power station.

Vapor losses from the tank farms go to the atmosphere. Air pollution and product loss could be significantly reduced through a program for collecting and recovering vapors from the fixed roof storage tanks for intermediate and finished gasoline, naphtha, and aromatics.

The concentration of aromatics in critical areas is controlled. As a rule, measurements show concentrations below the levels allowed by the health safety rules.

Liquid effluents

Storm water from the tank farm, process area, roadways, and roofs is separated by oil skimming, then discharged in two lakes, Dimbovnic and Suseni. Waste water treatment consists of mechanical separation within the refinery, followed by final biological treatment in the Petrochemical Works Waste Water Treatment Facility. Waste water quality as it leaves the refinery is shown in Table C.1.5.1.

Waste water from the FCC unit is locally steam/flue gas stripped before entering the industrial sewerage.

TABLE C.1.5.1. - WASTE WATER QUALITY

Description	Place		
	Refinery battery limit*		Suseni Lake**
	Design	Average last 12 months	Average last 12 months
pH	6.5 - 8.5	6 - 11	6.7 - 8.1
COD	1 000	300 - 500	230
BOD	850	100 - 230	67
Phenols	10	1.5 - 6	.55
TSS	150	100 - 120	71
Oils	200	12 - 20	.91
Sulfides	nil	nil	nil
Sulfates	-	105 - 130	93
Chlorides	-	80 - 100	76

* Before final treatment.
** After final treatment, mixed with petrochemical works waste water.

Solid wastes

The crude storage bottom sludge and process units still bottoms are packed in polyethylene bags and trucked to the city dump. Spent FCC catalyst is stored in the equilibrium catalyst hopper. Sludge from the waste water facility is thickened and pumped to a dump.

Sulfur management

The gas desulfurization and sulfur recovery units are operated at a low performance level. Consequently, only a very small amount of sulfur is recovered. A mass balance for sulfur has not been determined.

Volatile organic compounds (VOC) management

Volatile organic compounds are managed at the refinery through the flare system and by the use of floating roof tanks for the storage of some of the volatile products and the recovery by recompression of some of the flare gases.

Heavy metals management

No special steps are taken to manage the heavy metals in the liquid fuel oils. The concentration of heavy metals is carefully controlled in the FCC feedstock to prevent catalyst deactivation.

1.6. Refinery Specific Potential and Opportunities for Improvement

In terms of energy consumption, furnace efficiency is a first priority level for necessary improvements. Raising the furnace efficiency from the actual to a level that is closer to normal refinery practice should provide a 20 000 to 25 000 tonnes per year savings in fuel gas. Much of this improvement could be achieved using the flue gas analyzers to fine tune the excess air.

Installing a turboexpander in the FCC unit, which is planned for the near future, will generate about 6 000 kW of power. Other good applications of power generation using hydraulic turbines should be considered.

The refinery needs to make significant changes in the operation of the fuel gas desulfurization units. These changes are linked with corrosion prevention, pollution reduction, and primarily with elimination of the existing limitations in furnace air preheating induced by fresh air-burned gases heat exchangers fouling. Saving even a small amount of hard currency during the last 12 months would have permitted the importation of amines (MEA and DEA). Arpechim lost much needed money by burning fuel gas that has a high hydrogen sulfide content.

As was shown, product losses are high enough to justify a special improvement program. Savings generated from such a program could help cover the costs of vapor emissions collection and recovery, improvements in the measurement of crude and products accuracy, the purchase of more spare parts needed to improve the pumps and compressors sealing, and general maintenance.

Technical and economical solutions should be studied to improve cooling water quality and to supply fuel gas during the winter when the natural gas network cannot cover consumption.

Catalytic reforming unit performances could be improved by using high performance catalysts instead of the obsolete monometallic ones. Some steps in this direction are planned in the near future.

1.7. Refinery Specific Problems and Trends

The main problem of the Arpechim refinery is to find a valid solution for the crude oil supply problems: increasing the quantity, reducing the number of types processed, and finding a constant source for paraffinic selected crude that is suitable for lube oils manufacturing. About 3.5 million tonnes of such crude should allow the refinery to re-start the lube manufacturing line. Processing crude for interested companies could be a convenient solution, as long as the refinery is able to produce good quality products.

Improvements in the gasoline blending pool could be achieved by starting up an MTBE production, which could help in the manufacturing of unleaded gasoline using some quantities of virgin naphtha.

Regarding fuel oil manufacturing, the viscosity balance may be improved by raising the performance levels of the visbreaking units. Sulfur content cannot be controlled using the existing units, so meeting market demands would require careful selection of processed crudes.

In spite of modern solutions adopted for planning, maintenance continues to be one of the problem areas that needs to be resolved through improved spare parts supply and increased productivity.

The Arpechim refinery has to adapt itself gradually to the free market oriented economy. This is an important challenge for management.

1.8. Reference to Data Base

The information contained in the questionnaire has been formatted into a computerized data base which is the subject of a separate report.

1.9. Supporting Plant Data

TABLE C.1.9.1. PRODUCT SPECIFICATIONS
- C_3-C_4 HYDROCARBON CUTS

TABLE C.1.9.2. PRODUCT SPECIFICATIONS
- GASOLINE AND NAPHTHAS PRODUCTS

TABLE C.1.9.3. PRODUCT SPECIFICATIONS
- DIESEL FUELS

TABLE C.1.9.4. PRODUCT SPECIFICATIONS
- FUEL OILS

TABLE C.1.9.5. PRODUCT SPECIFICATIONS
- ASPHALTS

TABLE C.1.9.6. STORAGE CAPACITY FOR FINAL PRODUCTS

TABLE C.1.9.7. CHARACTERISTICS OF CRUDE OILS

TABLE C.1.9.1 - PRODUCT SPECIFICATIONS - C_3-C_4 HYDROCARBON CUTS

Composition vol. %	C3 Type 1	C3 Type 2	C3 Type 3	nC_4	LPG	C_3[1]	nC_4-nC_4[1]	iC_4
C_1-C_2 % max.	5	2.5	3			.5		
Propane % min.	92.0	93.5	90.0					
Propane % max.				1	12	10	.2	8
Propylene and C_4 % max.			10					
Butane and Heavier % max.	2	2				1		
C_4 Hydrocarbons % min.				92.5	88		42	90
Pentane and heavier % max.				2.5	1		.5	.5
Total sulfur PPM max.	100	100	100	100	500	100	100	135
Water % max.	.05	.05	nil	nil	nil	nil	nil	nil

TABLE C.1.9.2 - PRODUCT SPECIFICATIONS - GASOLINES AND NAPHTHAS

Specifications	Auto Regular	Auto Premium	Naphtha Comp.	Naphtha Export	Unleaded Export	Naphtha for Steam Cracking
RON min.	87	95		88	90	
MON min.					80	
Distillation temp at vol %						
10 max.	70	70	130	65	60	140
50 max.	125	125	140	135	120	170
90 max.	185	180	185	185	185	190
EP max.	205	205	185	215	205	
RVP mm max.	500	500	500	600	450	
Sulfur content max %	0.1	0.1	0.12	0.18	0.1	
PPM						250
MTBE content % max.	10	15	nil	nil	10	
PONA composition % vol.						
Oleffins max.						2
Aromatics max.						18
Paraffins + naphthenes min.						80

TABLE C.1.9.3 - PRODUCT SPECIFICATIONS - DIESEL FUELS

Specifications	Roman	LD	-15	-10	-5	+5	Export		
							I	II	III
Density at 15 °C max.	.865						.840	.840	.845
Distillation vol. % min at									
300 °C	48	55	48	48	48	48	50	50	50
350 °C	85	90	85	85	85	85	88	90	85
Viscosity at 20 °C cst	2.5-12	2.5-12	2.5-2	2.5-12	2.5-12	2.5-12	2-8.5	2-8.5	2-8.5
Pour point °C max.		-15	-15	-10	-5	+5	-12	-12	-7
Flash point °C min.	55	55	55	60	60	60	60	60	60
Sulfur content % max.	.5	.5	.5	.5	.5	.5	.3	.5	.5
Con carbon residue % max.	.35	.25	.40	.40	.45	.45	.25	.25	.25
Ash content % max.	.01	.015	.015	.015	.015	.015	.01	.01	.01
Water & sediment % max.	nil	nil	nil	nil	nil	nil	nil	nil	nil
Corrosion on copper strip	neg	neg	neg	neg	neg	neg	16	16	16
Cetane number min.	45	45	45	45	45	45			

TABLE C.1.9.4 - PRODUCT SPECIFICATIONS - FUELS OILS

Specifications		50/30S	300/50 S	Light A	Light B	Non Industrial
Density at 20 °C max.				0.935	0.940	0.830
Vol. % distilled up to	200 °C					18
	250 °C			10	5	
	300 °C					98
Viscosity cst at	20 °C			31.5	31.5	2.5
	50 °C	210	350			
	80 °C	70				
	100 °C		140			
Flash point °C min.		90	100	55	60	
Pour point °C max.				-8	0	12
Sulfur vol. % max.		3.3	4.5	2	2	.1
Con carbon % max.		14	25	5	8	.05
Ash content % max.		.5	.5	.15	.2	.003
Lower heat value Kcal/g min.		9 300	9 200	9 650	9 500	10 000

TABLE C.1.9.5 - PRODUCT SPECIFICATIONS - ASPHALTS

Softening Point R&B °C	43-49
Penetration at 25 °C mmx10^{-1}	80-20
Ductibility at 25 °C mm, Min.	100
Fraas Crack Point °C Max.	-15
Solubility in CS_2 % Min.	99
Flash Point °C Min.	250

TABLE C.1.9.6 - STORAGE CAPACITY FOR FINAL PRODUCTS

Service	Cubic Meters (m^3)
Propane	5 400
Propylene	400
LPG	2 200
n-Butane - n-Butenes	3 000
i-Butane	1 200
n-Butane	2 000
Pentane	600
Gasoline	145 000
Diesel	57 000
Fuel Oils	64 000
Naphtha	4 000
Benzene	3 600
Toluene	6 400
Ethylbenzene	1 000
Paraxylene	1 400
ortho-Xylene	1 300
Mixed Xylenes	2 600
N-Paraffins	12 000
Base Lube Stocks	30 000
Finished Lube Oils	11 000

Note:

a) Benzene and toluene pass the nitration grade specification. Ethylbenzene is minimum 99.6 percent purity, orthoxylene is minimum 99 percent, and paraxylene is minimum 98 percent.

b) Normal paraffins are produced in two types:

- heavy, containing maximum 5 percent C_{12}, maximum 5 ppm aromatics, maximum 5 ppm sulfur, maximum 1.5 isoparaffins and naphthenes, EBP maximum 322 °C

- light, containing maximum 15 percent C_{13}, maximum 1 percent C_{14}, maximum 0.5 percent C_{15}, maximum .25 ppm aromatics, maximum 10 ppm sulfur, maximum 5 percent isoparaffins and naphthenes, IBP minimum 195 °C, EBP maximum 250 °C.

TABLE C.1.9.7 - CHARACTERISTICS OF CRUDE OILS

No.	Country of Origin	Crude Name	API Gravity	Vol %	
				VGO 375-535	Res 535+
1	Saudi Arabia	Arabian Heavy	28.1	19.1	29.9
2		Arabian Light	33.5	23.7	17.0
3		Arabian Medium	30.7	22.1	22.6
4	Dubai	Dubai Export	31.0	22.0	17.2
5	Egypt	Amna	36.0	24.4	22.2
6	Egypt	Belayim	27.6	21.5	29.3
7	Egypt	Gulf of Suez	31.9	22.1	23.4
8	Egypt	Zeit Bay	32.9	18.6	11.0
9	Iran	Iranian Heavy	31.5	13.1	30.0
10	Iran	Iranian Light	33.8	15.7	24.3
11	Iran	Poroozan	31.2	19.5	24.8
12	Iran	Basrah Light	34.0	20.7	19.8
13	Iraq	Fao Blend	20.7	24.7	25.0
14	Iraq	Kirkuk Blend	36.1	19.2	14.7
15	Kuwait	Kuwait	32.1	21.4	21.9
16	Libya	Sarir	37.6	23.4	19.4
17	Libya	Es Sider	36.9	22.0	15.5
18	Libya	Sirtica	42.7	17.0	8.2
19	USSR	Ural	33.5	20.3	12.7

C. INDIVIDUAL REFINERY DATA

2. ASTRA REFINERY - PLOIESTI, ROMANIA

Address:

Rafinaria Ploiesti (ASTRA)
Bdul Petrolului 59
2000 Ploiesti, Romania

Telephone: 40-71-46512
Telex : 19224
Telefax: 40-71-73939

Contact: Octavian Nan
General Manager

2.1. Summary Description of Refinery

The Astra refinery is owned by Astra S.A. All capital belongs to the Romanian state and could be transferred to the private sector according to the law of privatization.

The Astra refinery has a total surface of 1 600 000 square meters and is located in the southern section of Ploiesti city, in southern Romania about 60 kilometers north of Bucharest. See Figure No. 1.

Historically, Astra is one of a group of old refineries built at the beginning of the 20th century. Some of the process units were built before World War II when the refinery belonged to the SHELL group. They were rebuilt or repaired after being seriously damaged during the war. New units were built in the 1960s and 1970s to produce transformer oil, lube oils, and petroleum coke. The block flow diagram of Astra refinery, which has two main processing lines, is shown in Figure No. 4.

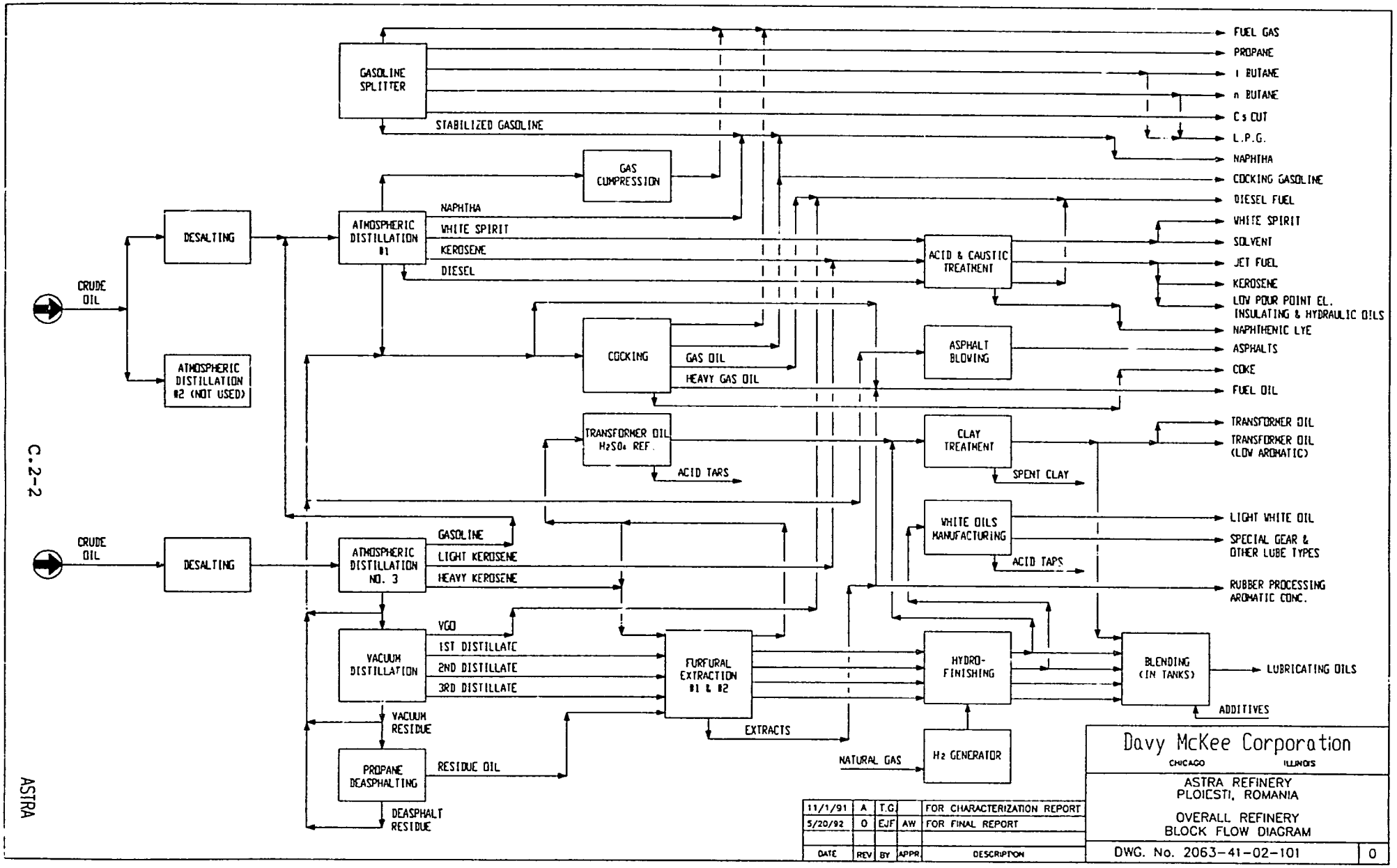
GASOLINE SPLITTER
STABILIZED GASOLINE
GAS COMPRESSION
DESALTING
ATMOSPHERIC DISTILLATION #1
NAPHTHA
WHITE SPIRIT
KEROSENE
DIESEL
CRUDE OIL
ATMOSPHERIC DISTILLATION #2 (NOT USED)
COCKING
GAS OIL
HEAVY GAS OIL
TRANSFORMER OIL H2SO4 REF.
ACID TARS
ACID & CAUSTIC TREATMENT
ASPHALT BLOWING
CLAY TREATMENT
SPENT CLAY
WHITE OILS MANUFACTURING
ACID TAPS
CRUDE OIL
DESALTING
ATMOSPHERIC DISTILLATION NO. 3
GASOLINE
LIGHT KEROSENE
HEAVY KEROSENE
VACUUM DISTILLATION
VGO
1ST DISTILLATE
2ND DISTILLATE
3RD DISTILLATE
VACUUM RESIDUE
PROPANE DEASPHALTING
RESIDUE OIL
DEASPHALT RESIDUE
FURFURAL EXTRACTION #1 & #2
EXTRACTS
HYDRO-FINISHING
NATURAL GAS
H2 GENERATOR
BLENDING (IN TANKS)
ADDITIVES
FUEL GAS
PROPANE
I BUTANE
n BUTANE
C5 CUT
L.P.G.
NAPHTHA
COCKING GASOLINE
DIESEL FUEL
WHITE SPIRIT
SOLVENT
JET FUEL
KEROSENE
LOW POUR POINT EL. INSULATING & HYDRAULIC OILS
NAPHTHENIC LYE
ASPHALTS
COKE
FUEL OIL
TRANSFORMER OIL
TRANSFORMER OIL (LOW AROMATIC)
LIGHT WHITE OIL
SPECIAL GEAR & OTHER LUBE TYPES
RUBBER PROCESSING AROMATIC CONC.
LUBRICATING OILS
11/1/91 A T.G. FOR CHARACTERIZATION REPORT
5/20/92 0 EJF AW FOR FINAL REPORT
DATE REV BY APPR DESCRIPTION
Davy McKee Corporation
CHICAGO ILLINOIS
ASTRA REFINERY
PLOIESTI, ROMANIA
OVERALL REFINERY
BLOCK FLOW DIAGRAM
DWG. No. 2063-41-02-101
0

FIGURE 4

The first line processes local low sulfur, semiparaffinic crude, and some imported low sulfur crudes. The crude is desalted and distilled in two units. Non-condensed components are collected and compressed into the fuel gas network. Gasoline goes into the naphtha pool. White spirit is treated with sulfuric acid, and kerosene and diesel cuts are submitted to caustic treatment to remove some aromatics and naphthenic acids. This produces commercial grade products - white spirit, hydrocarbon solvent, jet fuel, kerosene, and diesel fuel. There is a natural oilfield gasoline splitter in the same line that produces propane, i-butane, n-butane, LPG, a C_5 cut sold to Petrobrazi for further processing, and stabilized gasoline that goes into the naphtha pool.

A coking unit, which processes reduced crude, vacuum residue, and propane deasphalting residue, produces fuel gas; coking gasoline of which some sold to a detergent manufacturing company and the rest is directed to the naphtha pool; gasoil (diesel fuel component); heavy liquid residue (fuel oil component); and coke.

The second line processes a local, selected, special naphthenic crude which is desalted and distilled at atmospheric pressure and under vacuum. Small amounts of gasoline are directed to the atmospheric distillation unit #1 for re-running. The light kerosene cut gets caustic treatment. The heavy kerosene cut is used as a feedstock for transformer oil manufacturing. Reduced crude is used primarily for vacuum distillation and to feed coking and asphalt blowing. Vacuum gasoil is directed into the diesel pool, and the vacuum residue feeds the propane deasphalting unit. Deasphalting residue goes to heavy bottoms processing (coking, asphalt blowing); deasphalted oil and the three vacuum distilled cuts are submitted to two furfural extraction units and to hydrofinishing for the production of lube base stocks that are blended with additives.

Transformer oil is one of the main products at the Astra refinery. The feedstock is a heavy kerosene cut that is acid and clay treated. For some special, low aromatic types, the feed is submitted to furfural extraction before the acid and clay treatment.

Astra also produces over-refined (white) oils like light white oil for polyethylene processing. The oil is produced by deep sulfuric acid refining and clay treating.

Hydrogen that is needed in the hydrofinishing unit is produced in a methane steam cracker licensed by SELAS, a French company. No sulfur recovery facilities are provided because the sulfur content of the processed crudes is low.

Table C.2.1.1 provides information on the processing units. Table C.2.9.1 through 11 shows the main products specifications. The overall material balance, including comments on losses, is discussed in Section C.2.4.

TABLE C.2.1.1 - PROCESS UNITS

No.	Name of the Unit	Capacity tonnes/y	Licensor	Designer	Remarks
1	Gasoline Splitter	25 000	Unknown	Unknown	The unit was built previously for a different scope and rebuilt by the refinery in 1964.
2	Atmospheric Dist. #1	1 300 000	Arthur McKee Co.	Arthur McKee Co.	Commissioned in 1934, revamped in 1958.
3	Gas Compressing	15 000		Astra	Built by the refinery in the 70s.
4	White Product Treatment	195 000	Unknown	Astra	Built by the refinery using equipment from old units.
5	Coker	450 000	ICERP	IPIP	
6	Atmospheric & Vacuum Dist. #3	700 000 crude	ICERP	IPIP	Built in the early 60s.
7	Transformer Oil H_2SO_4 Ref.	70 000	Labofina Belgium	IPIP	
8	Clay Treatment	80 000	ICERP	IPIP	
9	White Oils Manufact.	5 000	Unknown	Astra	Built by the refinery using equipment from old units.
10	Propane Deasphalting	140 000	Astra	IPIP	Designed by the refinery's technical personnel in 1965.
11	Furfural Extraction #1	180 000	ICERP	IPIP	Commissioned 1965.
12	Furfural Extraction #2	62 000	ICERP	IPIP	
13	Hydrofinishing	140 000	ICERP	IPIP	
14	Hydrogen Plant	820 (product)	Selas France	IPIP	
15	Asphalt Blowing	40 000	Unknown	Unknown	Built before World War 2.

2.2. Utilities, Services, Offsites

Electricity generation and distribution

Electrical power is supplied from the Brazi power station, which is part of the National Electricity Company, through two aerial lines at 35 kV. The two lines are independent of each other. A spare power source with an underground cable of 20 kV comes from the south Ploiesti transformer station. Stepdown transformers provide voltage reduction to 6 kV and subsequently to 0.5, 0.4, and 0.22 kV. The refinery does not have an emergency generator.

Steam generation and distribution

The Brazi power station, which is 6 kilometers from the refinery, is the main steam source. It sends steam through three pipelines - two with a 500 mm diameter and one with a 600 mm diameter. Steam is sent at 1.0 to 1.3 MPa, 220 - 260°C.

Three heat recovery generators, located in the coking, hydrofinishing and furfural extraction units, produce respectively, 0.9 - 1.0, 1.3, and 0.4 MPa of saturated steam. A low pressure header (about 0.2 MPa) collects steam used as a pump driving agent and is used for residential and tank farm heating, pipe steam tracers, process stripping, and crude preheating in the desalting units.

The refinery consumes a total of 40 tonnes of steam per hour in the summer and up to 100 tonnes of steam per hour in the winter.

Condensate collection

The condensate that results from consumers is collected in substations and pumped to a central condensate station. After mechanical separation it is passed through activated carbon and is pumped back to the Brazi power station.

Fuel supply

Process units use natural gas, refinery fuel gas, and fuel oil. Fuel oil was about 2 percent of the total amount of fuel consumed in 1990. This percentage is expected to rise in the coming years due to difficulties in maintaining the natural gas supply during the winter.

The typical compositions of refinery fuel gas (average) and natural gas (methane) from the national network are as follows:

Composition (vol%)	Ref. gas	Natural gas
H_2	6.0	nil
C_1	43.7	99.2
$C_2 + C_2 =$	20.1	0.02
C_3	14.6	0.01
C_3'	2.5	nil
iC_4	3.1	0.01
nC_4	6.8	nil
$C_5 +$	3.3	nil
CO_2	0.1	0.1
N_2	nil	0.66

Fuel oil specifications are shown in Table C.2.9.7.

Freshwater supply

Drinking water comes from the Ploiesti City network at an approximate rate of 7 cubic meters per hour. Wells located inside the refinery limits provide raw water at approximately 72 cubic meters per hour for use as cooling tower make-up water.

Water treatment and distribution

Recycled cooling water is treated to control pH, corrosion, algae and bacteria development, suspended solids stabilization, using sulfuric acid, Polidurol (corrosion inhibitor), B.121 (a biocide), Dispersal WS, and natrium hypochloride.

Raw water is treated after preheating at 90°C with lime, natrium carbonate, and trinatrium phosphate to prepare BFW for the local steam generators.

Cooling towers

The six cooling towers are natural draft type and interconnected to ensure a temperature difference of about 10°C.

Crude oil receiving

Crude oil arrives at the refinery through three pipe lines (two with a 10 inch diameter, and one with a 12 inch diameter) for the lube line and two more pipe lines (1 with an 8 inch diameter and one with a 10 inch diameter) for the fuel line. An unloading rack is capable of discharging 4 000 tonnes per day of crude that is transported by railroad tanks. Crude is stored in nine fixed roof tanks with a total volume of 39 000 cubic meters. This is equivalent to five days of running at maximum capacity.

Product blending and shipment

All products, lube oils included, are blended in tanks using recycling pumps and air blowing (fuel oils only).

Products are shipped by pipe lines. Liquefied gases, C_5 cut naphtha are sent to Petrobrazi for further processing. Diesel fuels are shipped via railroad tanks. About 6 500 tonnes per day of fuel oil and 1 000 tonnes per day of lube oils are shipped by railroad tanks. Hot asphalts, lubes, etc. are sent by road tanks. Product storage capacities are shown in Table C.2.9.12.

Flares, blowdown

The refinery has a flare that is 30 meters high with a 920 mm tip diameter and a blowdown facility located approximately 100 meters from the flare. The gasoline splitter, propane deasphalting, and coking units are connected to the blowdown and flare systems.

Fire protection

A loop type fire extinguishing water system provides water at 1.0 MPa. Hydrants are located at 50 meter intervals. A water sprinkler system protects the LPG storage tank farm. Steam curtains are installed in all process areas. Fixed and wheeled foam extinguishers cover tank farms and other sensitive areas. Additional fire fighting equipment available includes foam, powder, and carbon dioxide extinguishers and gas masks. Gas detectors and fire warning devices are installed

in the process units, the tank farm areas, and the warehouses. In case of a major fire event, the refinery's fire fighting squad is supported by the military fire fighting unit located in the immediate vicinity. This unit is large enough and equipped to manage not only Astra's needs but also the other refineries, even in the case of simultaneous fires.

2.3. Chemicals and Catalysts Use

The refinery uses chemicals for cooling water, BFW treatment, and as process treating agents. Catalysts are used for hydrofinishing and hydrogen manufacturing. The chemicals and catalysts are listed in Tables C.2.3.1 and C.2.3.2.

TABLE C.2.3.1 - CHEMICALS

Function	Name
Crude Demulsifier, Oil Demulsifier in White Oil Unit	E96
White Oil Refining Agent	$H_2 SO_4$ Function
Transformer Oil, White Spirit Refining Agent	$H_2 SO_4$
Kero and Diesel Treatments, Neutralization Agent	Caustic Soda
BFW Treatment	$Na_3 PO_4$
BFW Treatment, Neutralization	$Na_2 CO_3$
BFW Treatment, Neutralization	$Ca(OH)_2$
Cooling Water Biocide	B121
Boiling Water Treatment	NaClO
Cooling Water Dispersant	Dispersil
Cooling Water Corrosion Inhibitor	Polidurol

TABLE C.2.3.2 - CATALYSTS

Function	Name	Supplier
Base Lube Hydrofinishing	23-R-17	Vega, Rom.
Methane Conversion to H_2	NC-3	Craiova Chemical Works, Rom.

2.4 Previous 12-month operating history

Table C.2.4.1 shows the overall material balance of the refinery for 1985 and 1990.

TABLE C.2.4.1 - MATERIAL BALANCE, 1985 AND 1990

Input	Tonnes/year	
	1985	1990
Crude oil	1 820 726	1 163 714
Field natural gasoline	207 332	122 867
Feedstocks from other refineries	22 238	44 633
Total inputs	2 050 296	1 331 21

TABLE C.2.4.1 - MATERIAL BALANCE, 1985 AND 1990 - continued

Outputs	Tonnes/year	
	1985	1990
Fuel Gas	55 831	47 601
Propane, iC_4, nC_4, C_5 coking gasoline	86 210	56 199
Naphtha	307 537	194 785
Jet fuel	53 448	28 462
Kerosine	19 587	13 125
Diesel Fuel	548 777	311 482
Fuel oils	449 097	278 433
Asphalts	73 396	78 629
Lubricating, transformer, other oils	349 901	220 099
LPG	8 950	9 020
White spirit	-476	225
Petroleum coke	73 891	54 061
Losses	34 175	39 093
Total outputs	2 050 296	1 331 214

In 1990, the Astra refinery processed 1.33 million tonnes of feedstocks which, was 65 percent of the throughput in 1985, the reference year. The main reason for this was the decrease of crude extraction in the Romanian oilfields that traditionally supply the refinery and the lack of hard currency to pay for imported crude. The atmospheric and vacuum distillation units of the lube manufacturing line were shut down two weeks practically every month. Corrosion and fouling in the cooling equipment; a shortage of spare parts for the pump and compressor sealings and valves; equipment failures, especially the pumps, and the lack of natural gas during the winter all contributed to additional shut downs.

Subsequently, as energy consumption and product losses (in absolute values) were close to those reached in normal operations, economic efficiency decreased. About 20 percent of the overall losses are hydrocarbons incorporated in acid tars and spent clay, which is a consequence of the technology used for lubricants manufacturing.

2.4.1. Recent Modifications

In the last three to four years, due to difficulties in the oil extraction fields, the special selected naphthenic crude used for lubricating oil manufacturing was contaminated with small quantities of paraffinic crudes. Subsequently, the low natural pour points and cloud points of the oils increased resulting in products that did not meet specifications.

In cooperation with ICERP (the research institute), a solution was found. Part of oils hydrofinishing unit catalyst was replaced with hydrodewaxing catalyst. The unit now operates successfully, and cloud and pour points are close to normal values.

2.4.2. Crude Oil Supply

The Astra Refinery processed about 1.2 million tonnes of crude during 1990. The crude consisted of Romanian and imported crude. The Astra refinery processes two groups of crudes:

1) Romanian low sulfur, semiparaffinic crudes and imported low sulfur crudes for fuels and coke manufacturing

2) Romanian low sulfur, special selected naphthenic crude, for base lube oils and special transformer, white, and refrigerating machines oils. This type of crude originates from central-south Romania, in fields located between Bucharest and the Danube, and is processed only at Astra. The refinery processing technology is based on the use of this crude.

Table C.2.9.13 shows the main properties of the crudes processed by Astra refinery. For information on the effects of contamination of this crude, see Section C.2.4.1.

A further decrease in domestic crude supply is expected, so the refinery is looking for new sources, both local and imported.

2.4.3. Operating Experiences

No special or relevant events happened in the last year other than the situations previously mentioned - the shutdowns and improving the hydrofinishing unit for use as a partial hydrodewaxer. Operations continuity and efficiency were affected by numerous shutdowns mainly caused by crude oil supply shortages.

2.4.4. Impact of Crude Oil Changes

The refinery can process only low sulfur crudes. Lubricant manufacturing, in the absence of a dewaxing unit, requires crudes with low natural pour points and high viscosity indexes. This causes the Astra Refinery to be very dependent on the quality of the processed crude. The refinery needs to continue efforts to find new sources for suitable crude. The decline in naphthenic crude production will impact the lube oil slate in the country and / or on the processing operations and may require new units in the next five to ten years.

2.4.5. Impact of Product Market Changes

No significant changes in the market demand are in sight. Products manufactured by the refinery are sold and will sell easily, so the product market is not as critical factor in terms of the future existence of Astra refinery as the crude source is.

2.4.6. Impact of Legislation and Social Changes

Expected changes in environmental legislation, especially in law enforcement, will require changes in technology and funds to finance the changes. From a social perspective, the refinery is confronted with problems related to over staffing and must find ways to gradually reduce staff.

2.5. Environmental Considerations

Due to the low sulfur content of both gaseous and liquid fuels, no significant air pollution is generated by the process heaters. The main source of pollution is the extensive use of sulfuric acid for process purposes. During contact between sulfuric acid, (fuming and / or 96 percent concentration), and processed feeds in open reactors, significant quantities of sulfur oxides are spread in the atmosphere. Sulfur oxides are also generated by burning part of the acid tars (about 3 000 tonnes/y). About 2 000 tonnes/y of the acid tars are dumped causing water and soil pollution. In addition, about 1 300 tonnes/y of spent clay gets dumped. This contributes to the underground water blanket pollution.

2.5.1. Quality of Local Environment

The refinery is located close to a residential area and unfortunately it is a strong pollution generator that affects the entire southern section of Ploiesti City.

2.5.2. Current Emissions Control

Gaseous effluents

Tanks used at the refinery are all fixed roof cones with no vapor recovery. Flue gases are not treated. A flare system for the refinery is utilized. There are no facilities for sulfur recovery or sulfur oxide emissions neutralization.

Liquid effluents

The waste water treatment facility located at Corlatesti Village, close to Ploiesti, processes waste water from the Astra, Petrotel, and Vega refineries. The waste water treatment consists of mechanical separation and chemical and biological treatment. Table C.2.5.2.1 shows the average waste water quality as it enters and leaves the Corlatesti waste water treatment facility.

TABLE C.2.5.2.1 - WASTE WATER QUALITY

Item (mg/l)	In (mg/l)	Out
TSS	max 160	20 max
Hydrocarbons	max 300	25 max
Sulfonic acids	max 15	0.75
Phenol	max 8	0.60
CBO5 (g/l)	max 170	42
Naphthenic acids	max 75	0.60 max

Solid wastes

The refinery disposes of solid and liquid wastes in an open pit housing a volume of 110 000 cubic meters, and occupying an area of 26 000 square meters. Wastes dumped at the pit include: acid sludge, spent caustics, cresylic lye, spent clay, crude stills, atmospheric / vacuum bottoms, oil / water separator sludge, and waste water treatment sludge.

Sulfur management

There is no sulfur management within the refinery. A mass balance was not determined.

Volatile organic compounds (VOC) management

The refinery operates a flare system.

Heavy metals management

Not determined.

2.6. Refinery Specific Potential and Opportunities for Improvement

The Astra Refinery needs to be reassessed in terms of the technology needed to meet the environmental protection requirements. Practically all of the acid treatment processes will be replaced by hydrogen treatments, and spent clay must be freed of oil. The technology and basic process design data are available as a result of an intensive research program carried on in the last years. Now the refinery has to find resources to finance the investment.

Improvements in process equipment and cooling water treatment are also needed for the coming years.

2.7. Refinery Specific Problems and Trends

Astra is a refinery that is very dependent on a specific type of crude. This is both a strength and a weakness. All new product development needs to be carefully considered, including re-sizing the crude throughput and the product slate so that a highly specialized industrial lubricant and specialized oils could sustain the refinery's future existence.

2.8. Reference to Database

The information contained in the questionnaire has been formatted into a computerized data base, which is the subject of a separate report.

2.9. Supporting Plant Data

Tables:

C.2.9.1	PRODUCT SPECIFICATIONS - C_3-C_4 CUTS
C.2.9.2	PRODUCT SPECIFICATIONS - C_5 CUTS
C.2.9.3	PRODUCT SPECIFICATIONS - NAPHTHAS
C.2.9.4	PRODUCT SPECIFICATIONS - WHITE SPIRITS
C.2.9.5	PRODUCT SPECIFICATIONS - JET FUELS
C.2.9.6	PRODUCT SPECIFICATIONS - DIESEL FUELS
C.2.9.7	PRODUCT SPECIFICATIONS - FUEL OILS
C.2.9.8	PRODUCT SPECIFICATIONS - ASPHALTS
C.2.9.9	PRODUCT SPECIFICATIONS - COKE
C.2.9.10	PRODUCT SPECIFICATIONS - ELECTRICAL INSULATING OILS
C.2.9.11	PRODUCT SPECIFICATIONS - LUBRICATING OILS
C.2.9.12	PRODUCTS STORAGE CAPACITY
C.2.9.13	CHARACTERISTICS OF CRUDE OILS

TABLE C.2.9.1 - PRODUCT SPECIFICATIONS - C_3-C_4 CUTS

Specifications	Propane	i-Butane	n-Butane	LPG
C_1-C_2 % Max.	8			
Propane % Min.	93.5			
Propane % Max.		8	.2	12
Butane and Heavier % Max.	2			
i-Butane % Min.		80		
i-Butane % Max.			4	87
n-Butane % Min.			94	
n-Butane % Max.		12		
C_5 % Max.		.5	1	1
Total Sulphur PPM Max.		135	100	50
Vapor Pressure Bar at 10 °C Min.				2
50 °C Min.				7.5
70 °C Max.				11
Copper Strip Corrosion Test	pass	pass	pass	pass

TABLE C.2.9.2 - PRODUCT SPECIFICATIONS - C_5 CUTS

C_5 cut, exported for further processing at Petrobrazi (isomerization) C_4 vol % max. 5, iC_5 vol % min. 33, nC_5 vol % 33, sulphur content ppm max 40, distillation EP, max. 80 °C.

TABLE C.2.9.3 - PRODUCT SPECIFICATIONS - NAPHTHAS

Specifications	Values
RON min.	75
Distillation Max Temp. at Vol % 10	79
50	145
90	195
EP	205
RVP mm Hg Max.	500 Summer 600 Winter
Sulfur % Max.	.15

TABLE C.2.9.4 - PRODUCT SPECIFICATIONS - WHITE SPIRITS

Specifications	Values
Density at 20 °C Max.	.810
Flash Point °C Min.	33
Distillation Temp at Vol % IBP Max.	165
98 Max.	200
Sulphur Content % Max.	.025
Aromatic Hydrocarbons % Max.	22

TABLE C.2.9.5 - PRODUCT SPECIFICATIONS - JET FUELS

Specifications		Values
Density at 20 °C Min.		.780
Distillation Max. Temp. at Vol %	IBP	150
	10	175
	50	275
	90	270
	EP	280
Viscosity at 20 °C Cst Min.		1.4
Flash Point °C Min.		30
Cloud Point °C Max.		-60
Sulphur Content % Max.		.1
Aromatic Hydrocarbons Cont. % Max.		20
Smoke Point mm Min.		20
Gum Content mg/100ml Max.		6
Lower Heat Value kJ/kg Min.		42.950

TABLE C.2.9.6 - PRODUCT SPECIFICATIONS - DIESEL FUELS

Specifications	Type -15	Type -25	Type -45
Distillation Vol % Min at 300 °C	48	48	55
350 °C	85	85	88
EP °C Max.	360	360	
Viscosity at 20 °C Cst.	2.5÷12	2.5÷12	2.5÷8.5
Pour Point °C Max.	-15	-25	-45
Flash Point °C Min.	55	65	65
Sulphur Content % Max.	.5	.5	.25
Con Carbon on 10% Residue % Max.	.4	.4	.1
Copper Strip Corrosion Test	pass	pass	pass
Cetane Number Min.	45	40	45

TABLE C.2.9.7 - PRODUCT SPECIFICATIONS - FUEL OILS

Specifications	Type 40/45	Type 50/30	Type 70/25	Light A
Density at 20 °C Max.				0.935
Vol % Distilled up to 250 °C Min.				10
Viscosity Cst Max. at 20 °C				4.5
50 °C	40	50	70	3.0
80 °C	9	10	12	
Flash Point °C Min.	90	90	90	55
Pour Point °C Max.	45	30	25	-5
Sulphur Content % Max.	1	1	1	2
Con Carbon % Max.	14	14	14	5
Ash Content % Max.	.5	.5	.5	.5
Low Heat VaLue Kcal/kg Min.	9 500	9 400	9 200	

TABLE C.2.9.8 - PRODUCT SPECIFICATIONS - ASPHALTS

Specifications	Type D 80-120 Road	El Accum Sealing
Penetration mmx10^{-1}	81-120	18-30
Softening Point R&B °C	43-49	
Ductility at 25 °C mm, Min.		3-8
Flash Point °C Min.		225

TABLE C.2.9.9 - PRODUCT SPECIFICATIONS - COKE

Specifications	Values
Volatile Compound % Max.	11
Moisture % Max.	2
Ash Content % Max.	.6
Sulphur % Max.	.8

TABLE C.2.9.10 - PRODUCT SPECIFICATIONS - ELECTRICAL INSULATING OILS

Specifications		For Voltage Transformers Circuit Breakers TR30	For Capacitors Similar to Shell Diala C
Density at 20 °C Max.		.890	.865-.875
Viscosity Cst Max at	-15 °C	10	
	-20 °C	30	
	-50 °C	800	
Flash Point °C Min.		140	
Pour Point °C Max.		-40	
Breakdown Voltage Kv Min.		120	
Power Factor at 90 °C Max.		$4x10^{-3}$	$2x10^{-3}$
Interfacial Tension Dynes/cm, Min.		40	33-45
Oxidation Stability (C.E.I 74)			
Total Acidity (mg KOH/g) Max.		.3	.2
Sludge % max.		.1	.03
Dissipation Factor at 90 °C Max.		$120x10^{-3}$	$30x10^{-3}$

TABLE C.2.9.11 - PRODUCT SPECIFICATIONS - LUBRICATING OILS

Specifications
Astra produces a wide range of industrial use lubricating oils. In a range of viscosities of 4 Cst at 40 °C to 40 cst at 100 °C, medium or high viscosity index, very low natural pour points.

TABLE C.2.9.12 - PRODUCTS STORAGE CAPACITIES

Product	Capacity m^3
Naphtha	30 000
White Spirit	2 000
Jet Fuels	2 000
Diesel Fuels	18 000
Fuel Oils	50 000
Base Lube Stocks	17 000
Finished Lube Oils	52 000

TABLE C.2.9.13 - CHARACTERISTICS OF CRUDE OILS

Characterization	Imported Average	Domestic Semiparaffinic Mixes	Domestic Naphthenic Selected
Gravity	.838	.853-.913	.914
Sulphur Content %	.3	.3	.4
Pour Point °C	19	20-22	-40
Viscosity at 20 °C Cst	23	16-86	144
Con Carbon %	2-6	3-8	2.3
Atmospheric Distillates			
C_1-C_5 Yield on Crude Vol %	.6	.8-.9	.6
Naphtha (C_6-150 °C) Yield on Crude Vol %	18	10	1.7
RON	58	55	--
Sulphur Wt %	.02	.015-.02	--
Kero + Diesel (150-360°C) Yield on Crude Vol %	40	27-37	34
Cetane Number	52	45-50	na
Pour Point °C	-50	-45 - -50	-47

C. INDIVIDUAL REFINERY DATA

3. DARMANESTI S.A. - DARMANESTI, ROMANIA

Address:

Rafinaria Darmanesti S.A.
Strada Energiei 1, Oras Darmanesti, Judetul
Bacau, Cod 5477, Romania

Telephone: 933-62202
Telex No.: 21822
Telefax No: 933-51339

Contact: Vasile Lungu
Manager

3.1. Summary Description of Refinery

Rafinaria Darmanesti S.A. is a petroleum processing plant company. All capital belongs to the Romanian state and could be transferred to the private sector according to the law of privatization.

The Darmanesti refinery is located in eastern Romania, near the town of Darmanesti, and 65 kilometers southeast of Bacau city. See Map figure 1. The refinery is located on the Uz River approximately 6 kilometers from the Trotus River, and occupies an area of 95 hectares. The Darmanesti refinery produces a normal range of petroleum products including gas, gasolines, naphthas, gas oils, kerosene, fuel oils, and its most important product, needle coke.

The refinery was designed to process crude from the surrounding oil fields. Operations began in 1949 in an atmospheric distillation unit that was moved to Darmanesti from an older dismantled refinery in Bucharest. In the 1950s, two more atmospheric distillation units and a thermal cracking unit were added. A power station was also built. The coking unit was commissioned in 1979. During the last few years and in connection with the start-up manufacture of needle coke, the thermal cracking unit was revamped, and the coking unit was enlarged by the addition of a third drum. Both the thermal cracking and coking units are equipped with gas fractionation facilities.

The maximum crude processing capacity of the refinery is 1.5 million tonnes per year. However, one of the atmospheric distillation units was shut down and will be dismantled, so that one million tonnes per year may be taken as the reference throughput.

Table C.3.1.1 gives information on process units. Table C.3.9.1 through 7, Section C.3.9. shows products specifications. The overall material balance, including comments on losses, is discussed in Section C.3.4.

The Darmanesti refinery block flow diagram is shown in Figure 5.

TABLE C.3.1.1 - PROCESS UNITS

No.	Name of the Unit	Capacity Mt/Year Feed	Licensor	Designer	Remarks
1	Atmospheric Distillation #1 (+ Desalting)	412 000	Arthur McKee	Unknown	Moved to Darmanesti from a pre-war refinery in Bucharest.
2	Atmospheric Distillation #2 (+ Desalting)	626 000	Unknown	Unknown	Commissioned in the early 1950s.
3	Atmospheric Distillation #3	462 000	Unknown	Unknown	Commissioned in the early 1950s. Shut down in 1989.
4	White Products Treatment	500 000	Unknown	IPIP	Commissioned in the early 1950s.
5	Thermal Cracking	412 500	Nefte Project USSR	Nefte Project USSR	Commissioned in 1956. Revamped in 1987.
6	Coking	460 000	ICERP	IPIP	Commissioned in 1979.

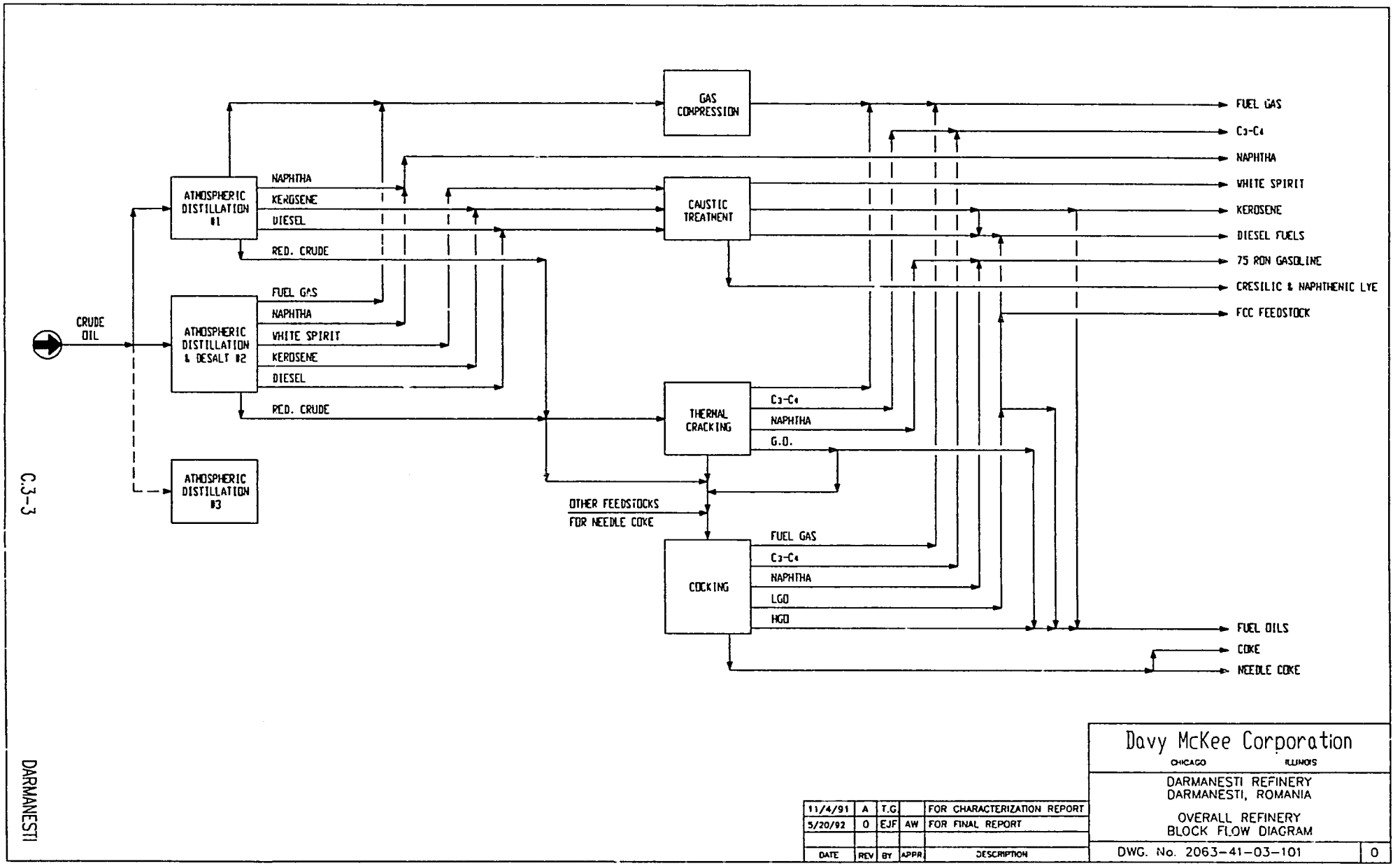
CRUDE OIL
ATMOSPHERIC DISTILLATION #1
NAPHTHA
KEROSENE
DIESEL
RED. CRUDE
ATMOSPHERIC DISTILLATION & DESALT #2
FUEL GAS
NAPHTHA
WHITE SPIRIT
KEROSENE
DIESEL
RED. CRUDE
ATMOSPHERIC DISTILLATION #3
GAS COMPRESSION
CAUSTIC TREATMENT
THERMAL CRACKING
C3-C4
NAPHTHA
G.O.
OTHER FEEDSTOCKS FOR NEEDLE COKE
COCKING
FUEL GAS
C3-C4
NAPHTHA
LGO
HGO
FUEL GAS
C3-C4
NAPHTHA
WHITE SPIRIT
KEROSENE
DIESEL FUELS
75 RON GASOLINE
CRESILIC & NAPHTHENIC LYE
FCC FEEDSTOCK
FUEL OILS
COKE
NEEDLE COKE
Davy McKee Corporation
CHICAGO ILLINOIS
DARMANESTI REFINERY
DARMANESTI, ROMANIA
OVERALL REFINERY
BLOCK FLOW DIAGRAM
DWG. No. 2063-41-03-101
0
11/4/91 A T.G. FOR CHARACTERIZATION REPORT
5/20/92 0 EJF AW FOR FINAL REPORT
DATE REV BY APPR. DESCRIPTION

FIGURE 5

3.2. Utilities, Services, Offsites

Electricity generation and distribution

Electricity is generated in the refinery's power station at 6 kV, by two 5 MVA each generators, driven by back pressure turbines using 4.0 MPa superheated steam and producing 1.1 MPa steam. Power may be exported to or absorbed from the national network through a connection station (two 110/6 kV transformers of 10 MVA each). Stepdown transformers provide power at 0.4 kV that is used by the process units and at 0.2 kV that is used for general purposes.

Steam generation and distribution

High pressure, 4.0 MPa steam is produced in three TKTY-50-40 type Russian made boilers and is used to drive the turbines that drive the power generators. Turbine back pressure steam and medium pressure steam produced in the heat recovery local steam generators in the thermal cracking and coking units feed the medium pressure header at 1.0 MPa. Medium pressure steam is used for process heating and pump driving. Used steam from the medium pressure system feeds the low pressure header, supplying the tank farm and residential heating at 2 MPa.

Condensate system

Condensate is collected in substations and pumped as washing water in the desalters. Due to a high grade of oil contamination, condensate cannot be used as boiler feed water.

Fuel supply

As a rule, the refinery uses its own fuel gas which sometimes is produced in quantities larger than demands. If necessary, natural gas may be imported from the national network, up to 28 million Nm^3/year. In case of an emergency and for start-up operations, boilers in the power station use liquid fuel. Typical ompositions of the refinery fuel gas and natural gas are as follows:

(Vol%) Comp.	Ref. gas	Natural gas
C_1	70.8	88.5
C_2	18.0	9.0
C_3-C_3=	8.7	2.5
C_4^+	2.5	---

For fuel oil specification see Table C.3.9.5, Section 3.9.

Fresh water supply

The drinking water is ground water that is chlorinated before use. Raw water is obtained from a reservoir on the Uz River.

Water treatment and distribution

Raw water is treated by pH adjustment, flocculation, sedimentation, and filtering. Chemicals used include lime, ferrous sulfate, ammonium sulfate, ammonium phosphate, and polyacrylamide. Boiler feed water is treated by ion-exchange softening and deaerated by steam stripping. Natrium triphosphate is added in the drums and deaerator.

Cooling towers

There are three cooling towers: two with natural draft for the atmospheric distillation and thermal cracking units and one with forced draft for the coking unit. The temperature inlet-outlet difference is approximately 9 to 11 °C. In case a cooling water system fails, once through cooling is used to direct the warm water to the sewer system.

Crude oil receiving

The main crude supply is local crude from the neighboring Moinesti area fields. It is transported to the refinery by two pipelines (6-inch and 8-inch inside diameter). An unloading rack may discharge imported crude transported by railroad tanks. Crude is stored in 8 fixed roof tanks with a total volume of 37 510 cubic meters. This is enough to ensure about two weeks of operation at close to the maximum throughput.

Other feedstocks for needle coke manufacturing (FCC slurry, coal tar, lube refining extracts, etc.) are received via railroad tank cars and are stored in three fixed roof tanks with a total capacity of 9 910 cubic meters. A fixed roof tank with a 1 000 cubic meter capacity stores platformate which is imported as a component for RON 75 gasoline.

The consuming units have storage space for liquid and solid chemicals.

Product blending and shipment

All liquid products are mixed in the tanks by pump recirculation and / or air blowing (for diesel and liquid fuels only). Pipelines for C_3-C_4 cut, naphtha, and gasoil, which connect the Darmanesti refinery to the Rafo refinery (Section C.8) are under construction. Until the pipelines are commissioned, the C_3-C_4 cut goes into the refinery fuel gas pool, and all liquid products are shipped by railroad tanks.

Tank farm

Storage capacities for intermediate and finished products are shown in Table C.3.9.8., Section C.3.9.

Flares, blowdown and dropout system

A flare system consisting of one stack that is 46 meters high with an 800 millimeter tip diameter services the refinery. Appropriate liquid collecting vessels handle gases from the thermal cracking and coking units. Atmospheric distillation, thermal cracking, and the coking units may discharge the column and heater contents into three blowdown facilities.

Fire protection

A loop type extinguishing water system provides water at 0.35 to 0.4 MPa pressure which may be increased to 1.2 MPa. Hydrants and water monitors are located in the process areas, on roads, and around the tank farms. A spare pump diesel engine driver is provided in case of electrical power failure. 5 500 cubic meters of additional raw water may be used.

Foam generating facilities, both local stations and mobile equipment, are available near the tank farms and process areas. The major equipment is provided with water sprinkling rings, steam curtains, and portable means such as foam, gas, and powder portable extinguishers. Appropriate equipment, located in all sensitive areas, is provided for fire emergencies.

In case of major events, military fire fighting units located in Moinesti, which is 18 kilometers away; Onesti, which is 40 kilometers away; and Bacau, which is 65 kilometers away may supply and assist the local squad operations.

3.3. Chemicals and Catalysts Use

The Darmanesti refinery uses chemicals for raw, boiler feed water, and waste water treatment and for process purposes including kerosene (cracked naphtenes) and diesel caustic treatment, white spirit acid refining and as a foam preventing agent in the coking unit. Table C.3.3.1 gives information about the chemicals used. No catalysts are used.

TABLE C.3.3.1 - CHEMICALS

Name	Use
Sodium chloride	Water treatment
Trisodium phosphate	Water treatment
Ferrous sulphate	Water treatment
Ammonium phosphate	Water treatment
Anhydrous lime	Water treatment
Demulsifying agent E96	Crude desalting
Caustic soda	Process
Sulfuric acid	Water treatment and process
Polyacrylamide	Water treatment
Aluminum sulphate	Water treatment
Chloride gas	Water treatment (potable)
Zinc sulfate	Water treatment
IC2	Corrosion inhibitors
Nalco 673	Corrosion inhibitors
Silicon MC200 and MS200	Defoaming agent (coking unit)
CKTH-1	Defoaming agent (coking unit)

3.4. Previous 12 - Month Operating History

During the last 12 month period the refinery processed about 720 000 tonnes of crude. This decrease of normal operating capacity was accompanied by a 32 percent drop in the capacity of the atmospheric distillation operation, a 28 percent drop in the capacity of the coking operation, and a 77 percent drop in the capacity of the cracking operation. A combination of reduced crude supply and product demand contributed to the reduced throughput.

See Table C.3.4.1. for the Material Balance for 1990.

TABLE C.3.4.1. - MATERIAL BALANCE, 1990

Inputs	Tonnes/y 1990	Design
Crude oil type C - Moldova	570 000	1 500 000*
Imported crude oil	150 000	-
Catalytic cracking slurry	25 000	30 000
Naphthenic extract (lube refinery)	20 000	30 000
Coal tar	8 000	23 000
Other feeds for needle coke	1 000	17 000
Reformed gasoline	100	5 000
Paraflow	100	200
Total Inputs	774 200	1 605 200

Outputs	Tonnes/y 1990	Design
Fuel	36 000	52 000
C3 - C4 Cut	-	28 700
Naphtha	141 000	29 700
RON 75 gasoline	16 000	29 800
Coking and cracking gasoline	38 000	110 700
White spirit	4 000	7 400
Kerosene	20 000	52 000
Fuels	234 000	448 000
FCC feedstock	78 000	246 300
Fuel oils	125 000	214 500
Metallurgical Coke	39 000	35 200
Needle coke	22 000	48 800
Naphthenic lye	200	200
Loss	21 000	34 200
Total Outputs	774 200	1 605 200

* Atmospheric distillation Unit #3 has not been in operation since 1989 (capacity 462 000 mt/yr).

Large amounts of products (more than 2.5 percent on crude) are lost in the atmosphere, burned (excess C_3-C_4 cut in lack of means of shipment), or simply evaporated. The fixed roof tank vent valves discharge into the atmosphere.

3.4.1. Recent Modifications

The coke plant is relatively new and became operational in 1979. Thermal cracker no. 1 was originally built in the 1950s and was rebuilt and modernized and recommissioned in 1987. The coke and thermal cracker units are used to produce needle coke, the main product of the refinery.

In addition to these major construction projects, the refinery has built or expanded the following facilities:

- steam and power system including a co-generation type power house, a boiler feed-water chemical treatment station, a transformer station, and an electric supply system
- steam system
- water cooling system
- air compressor station
- waste water treatment station
- gas system
- storage blending facility
- transfer facility
- fire protection system
- flare and blowdown system

3.4.2. Crude Oil Supply

The Darmanesti refinery crude oil supply was 80 percent domestic and 20 percent imported. The refinery had planned on using 100 percent domestic crude, however due to a shortfall in the domestic supply, imported oil had to be used. The domestic crude is type C-Moldova with a 32.55 to 31.63 °API gravity and a sulfur percentage of 0.4 to 0.6 weight percent. The imported crude has a 35.7 to 33.17 °API gravity. The main characteristic of crudes and other feedstocks processed in the last 12 months are shown in Tables C.3.9.9 and C.9.10, Section 3.9.

3.4.3. Operating Experiences

During the past few years, the Darmanesti refinery became the only supplier of needle coke in Romania. This product is needed by the metallurgical industry. Subsequently, the thermal cracking unit was operated as an aromatizing unit for the coker feedstock.

Due to the lack of appropriate shipping methods, shut downs were necessary every time the railroad tank cars were not available to transport refinery products. The pipelines for the C_3-C_4 cut, naphtha, and gasoil to the Rafo refinery are not yet completed.

3.4.4. Impact of Crude Oil Changes

Changes in the crude oil supply (processing of imported crude) did not cause a major impact as a low sulfur containing crude was available.

3.4.5. Impact of Product Market Changes

Demand for needle coke provided a good opportunity for the refinery to find a specialized niche in the market. Thermal cracking and coking gasolines were not in demand as hydrotreating is required to obtain a marketable product.

3.4.6. Impact of Legislation and Social Changes

Under the new legislation, the Darmanesti refinery could become an independent trading company. This change may provide some ways to improve feedstock supply and product marketing.

The refinery is the main industrial operator in town and neighboring area so maintaining the workplaces in the refinery and using the available manpower efficiently are important social goals.

3.5. Environmental Considerations

3.5.1. Quality of Local Environment

The Darmanesti refinery is located in a relatively industrialized area that has provisions for coal mining and crude oil extraction and wood processing. It is one of the main contributors to atmospheric and water pollution in the Uz River valley.

96

3.5.2. Current Emissions Control

Gaseous Effluents

The tanks used on the refinery are all fixed roof cone type that vent to the atmosphere. There is no sulfur recovery at the refinery because only low sulfur crudes are processed. A flare system exists that is used with a recovery unit for condensate. Uncondensed volatiles from the atmospheric distillation units are recompressed in the fuel gas header.

Liquid Effluents

Storm water from the tanks and process areas is collected and discharged to the waste water treatment facility. The waste water is subject to mechanical, chemical and biological stages of treatment prior to being discharged into the Trotus River. Waste water quality is described in Table C.3.5.1.

TABLE C.3.5.1 - WASTE WATER QUALITY

Item	Actual, max.
TDS mg/l	Not determined
TSS mg/l	20.0
COD, mg O_2/l	150.0
BOD, mg O_2/l	22.0
Oil / Grease mg/l	10.0
Phenol mg/l	0.7
pH	6.3 - 8.5
Flow rate, m^3/hr	600.0

Solid Wastes

Output of sludge from the waste water treatment is at a rate of approximately 3 900 kilograms per day and is disposed in the sludge pit. Spent caustic (cresylic lye) is stored and sold to the Rafo refinery for cresylic acid manufacture.

Sulfur Management

Sulfur is not recovered within the refinery because only low sulfur crudes are processed.

Volatile Organic Compounds (VOC) Management

See the Section on Gaseous Effluents.

Heavy Metals Management

No heavy metals are released in the environment.

3.6. Refinery Specific Potential and Opportunities for Improvement

The Darmanesti refinery is in a good position since becoming a needle coke supplier. Add to this the advantage of having a very close crude source, and the refinery is in a good position for future operations and growth. To do it needs several improvements in its operating policy, process units operations, product slate, and energy production.

Limiting the quantity of processed crude to the bare necessity could be advisable keeping in mine market demand. By using only one atmospheric distillation unit, some spare equipment would become available for improving the crude preheating and desalting performance. At the same time a more intensive use of the thermal cracking and coking units to manufacture needle coke will increase the refinery's economic efficiency. Of course, raising needle coke production depends on specific feedstock sources, which could be enlarged by including a certain amount of reduced crude and higher sulfur FCC slurry, up to the limits on sulfur content set by international specifications. The tendency to set specifications as high as possible, which was also observed in some other refineries in Romania, may sometimes be an artificial barrier against promoting efficient technologies.

Due to the lack of suitable analytical equipment, the refinery relies on the client to decide if the coke meets the specifications for needle coke; if not, the price is greatly reduced. This handicap should be overcome by using a small amount of hard currency, which the refinery lacks for the moment, to buy the equipment needed for the analytical tests.

An appraisal should be made on the possibility of installing a dimer unit so the refinery could use most of the olefins to produce a high octane blending stock instead of relying on the Rafo refinery for blending of components or for processing low grade gasoline.

Revamping and modernizing the process for thermal cracking and coking gasolines is recommended.

3.7. Refinery Specific Problems and Trends

The refinery experiences problems that are related to technology and to location.

On one hand, processes like thermal cracking and coking that are involved with needle coke manufacture generate large amounts of gases and residual heat. On the other hand, the demand for heating in the refinery and in the town of Darmanesti with a population of 15 000 is limited. Installing a condensation type turbo-generator in the power house and using the excess amount of gases to produce electrical power could be possible solutions to this problem. The refinery could also resolve the problems of vapor losses from the fixed roof gasoline storage tanks by installing vapor collection systems. The vapor could be collected and recompressed in the fuel gas header.

Completion of the pipelines that will link the Darmanesti and Rafo (Onesti) refineries will also help to improve operating efficiency.

The future trends at Darmanesti is specializing in needle coke manufacturing adapting the crude throughput and product slate to this main scope of operation.

3.8. Reference to Database

The information contained in the questionnaire has been formatted into a computerized data base, which is the subject of a separate report.

3.9. Supporting Plant Data

TABLE C.3.9.1	PRODUCT SPECIFICATIONS - C_3-C_4 CUTS
TABLE C.3.9.2	PRODUCT SPECIFICATIONS - NAPHTHA GASOLINE
TABLE C.3.9.3	PRODUCT SPECIFICATIONS - WHITE SPIRIT KEROSENE
TABLE C.3.9.4	PRODUCT SPECIFICATIONS - DIESEL FUELS, GASOILS
TABLE C.3.9.5	PRODUCT SPECIFICATIONS - FUEL OILS
TABLE C.3.9.6	PRODUCT SPECIFICATIONS - COKE
TABLE C.3.9.7	PRODUCT SPECIFICATIONS - LYE
TABLE C.3.9.8	STORAGE CAPACITIES FOR INTERMEDIATE AND FINISHED PRODUCTS
TABLE C.3.9.9	CHARACTERISTICS OF CRUDE OILS
TABLE C.3.9.10	CHARACTERISTICS OF FEEDSTOCKS FOR NEEDLE COKE

TABLE C.3.9.1 - PRODUCT SPECIFICATIONS - C_3-C_4 CUTS

Specifications	Values
C_2 Total wt % Max.	3
Propylene wt % Min.	10
C_4 Total wt % Min.	35
C_5 wt % Max.	7
Sulfur mg/Nm^3 Max.	4 000

TABLE C.3.9.2 - PRODUCT SPECIFICATIONS - NAPHTHA GASOLINE

Specifications	Naphtha	75 RON Gasoline
Density at 15°C Max.	740	
Ron Min.		75
Distillation Max Temp at Vol %IBP	35	
10	130	79
50	140	145
90	165	195
EP	185	205
Sulfur Content % Max.	.08	.15

TABLE C.3.9.3 - PRODUCT SPECIFICATIONS - WHITE SPIRIT KEROSENE

Specifications	White Spirit	Kerosene
Density at 20°C Max.	.795	.830
Flash Point °C Min.	33	38
Distillation:		
IBP °C Max.	165	
Vol % Distilled up to 200 °C Max.		18
Vol % Distilled up to 200 °C Min.	98	
Vol % Distilled up to 300 °C Min.		98
Unsolubles and Water	nil	nil
Mineral Acidity / Alkalinity	nil	nil
Volatility to Xylene	2-4.5	
Sulfur Content % Max.	.025	.1
Aromatic Hydrocarbons % Max.	18	
STAMMER Color mm Min.	300	200
Copper Strip Corrosion Test	pass	pass
Viscosity at 20°C Cst min.		2.5
Ash Content % Max.		.003
Con Carbon on 10% Residue Max.		.05
Cloud Point °C Max.		-12
Lower Heat Value Kcal/Kg Min.		10 000
Smoke Point mm Min.		18

TABLE C.3.9.4 - PRODUCT SPECIFICATIONS - DIESEL FUELS, GASOILS

Specifications	+5	-5	-10	-15	-25	Diesel Comp.	FCC Feedstock
Distillation:							
IBP °C Min.						185	230
Vol % Min at 300 °C	48	42	42	42	48	50	
350 °C	85	85	85	85	85	88	
Viscosity 20 °C Cst	2.5-12	2.5-12	2.5-12	2.5-12	2.5-12		
50 °C Cst							4.1 ÷ 25.1
Flash Point °C Min.	60	60	60	55	65	60	90
Sulfur Content % Max.	.5	.5	.5	.5	.5	.4	.8
Con Coke on 10% Residue % Max.	.45	.45	.45	.4	.4		
Ash % Max.	.015	.015	.015	.015	.015		
Insolubles and Water % Max.	.5	.5	.5	.5	.5	nil	
Cetane Number Min.	45	45	45	45	40		
Iodine Index g/100g Max.						30	
Mineral Acidity / Alkalinity							nil

TABLE C.3.9.5 - PRODUCT SPECIFICATIONS - FUEL OILS

Density at 20°C Max.	.935	
Vol % Distilled up to 250°C Max.	10	
Viscosity Cst Max. at 20 °C	33	
50 °C	21	310
Flash Point °C Min.	55	90
Sulfur Content % Max.	2	1
Con Carbon on 10% Residue % Max.	5	14
Ash Content % Max.	.15	.5

TABLE C.3.9.6 - PRODUCT SPECIFICATIONS - COKE

Specifications	A	B	C	Needle I*	Needle II**
Particle Size:					
Up to 5mm % Max.	20			5	
Up to 10mm % Max.		50			
Overall Limits mm	5-200			5-200	5-200
Moisture % Max.	2	2	2	2	2
Ash Content % Max.	.6	.6	.6	.35	.30
Sulfur Content % Max.	.8	.8	.8	.75	.75
Volatile Compound % Max.	11	11	11	7	7
Benzene Solubles % Max.	2.5	2.5	2.5		
Water Solubles % Max.	.6	.6	.6		
Metals Content Wt % Max.:					
Si+Fe	.1	.1			
Ti+Va	.01				
Lower Heat Value Kcal/g Min.	8 200	8 200	8 200		
Thermal Expansion Coefficient C.T.E. $x10^{-6}/°C$				.4-1	.6 max.
Fibrous + Floral Orientation % Min.				75	75
Real Gravity g/cm^3 Min.				2.12	2.12

* for electrodes
** for pellets

TABLE C.3.9.7 - PRODUCT SPECIFICATIONS - LYE

Specifications	Cresylic	Naphthenic
Cresylic Acids Content Vol % Min.	10	
Naphthenic Acid Content Vol % Min.		15
Cresilic Acids Solubility in NaOH % Min.	50	
Naphthenic Acids Neutralization Number mg KOH/g Min.		150
NaOH Concentration g/l Max.	70	
Unsoponifiables Wt % Max.		24

TABLE C.3.9.8
STORAGE CAPACITIES FOR INTERMEDIATE AND FINISHED PRODUCTS

Service	Capacity M^3
C_3-C_4 Cut	120
Naphtha	16 915
Coking Thermal Cracking and Ron 75 Gasoline	16 750
White Spirit	600
Kerosene	3 245
Virgin Diesel Comp., Diesel Fuels	32 238
Coking and Thermal Cracking Distillates	17 370
Atmospheric, Coking, Thermal Cracking Liquid Bottoms, Finished Fuel Oils	29 780
Lye	1 834

TABLE C.3.9.9 - CHARACTERISTICS OF CRUDE OILS

Specifications	Moldova Domestic C Type	Imported (Libya Sarir Main Cy)
Density at 15 °C	.859-.864	.840-.846
Sulfur Content %	.4-.6	.59
Pour Point °C	4-8	15-20
Viscosity at 50 °C Cst	5.2-7.5	6.99
Con Carbon %	2-3.5	4-4.5
Naphtha (C_6-20F °C) Yield on Crude Vol %	26	19-22
Suifur Wt %	.014	.006
Kerosene and Diesel (207-284°C) Yield on Crude Vol %	16	8-14
Density at 15 °C	.836	.787-.807
Sulfur Wt %	.15	.05
Heavy Gasoil (284-300°C) Yield on Crude	13	14.2-15.4
Density at 15 °C	.862	.835
Sulfur Wt %	.58	.14
Viscosity at 50 °C Cst	7.3	7.1
Reduced Crude (350°C Plus) Yield on Crude	44	48-56
Density at 15 °C	.831	.893-.916
Sulfur Wt %	.87	.11

TABLE C.3.9.10 - CHARACTERISTICS OF FEEDSTOCKS FOR NEEDLE COKE

Characteristics	Lube Extract	Coal Tar	FCC Slurry
Density at 20 °C	.985 min.	1.07-1.125	1.01
IBP °C Min.		210	230
Viscosity Cst at 50 °C	100		
100 °C			12.2
Ash Content % Max.	.05	.15	
Con Carbon %	10	250	6.5
Anthracene Content Wt % Min.		9	
Benzene Insolubles Wt % Max.		.45	

C. INDIVIDUAL REFINERY DATA

4. LUBRIFIN S.A. BRASOV - BRASOV, ROMANIA

Address:

Lubrifin S.A.
52, Harmanului St.
2200 Brasov, Romania

Telephone: 921/35234
Telex No.: 61309
Telefax No: 921/35150

Contact: Mihai Costea
General Manager

4.1. Summary Description of Refinery

Lubrifin S.A. is a company that operates in the lubricants manufacturing industry. All capital belongs to the Romanian state and could be transferred to the private sector under the provisions of the law of privatization.

The Lubrifin S.A. refinery is located in a residential area of the city of Brasov, Romania. See Map Figure 1.

The refinery produces high grade industrial lubricating oils and lubricating greases. It does not produce any of the raw material used in the production of the mineral oils and lubricating greases. All oil feedstocks are supplied by the Steaua Romana, Astra, and Petrotel refineries. The fat raw materials necessary for the production of lubricating greases are supplied by Marasesti Chemical Enterprise and Stela Bucuresti S.A. Some feedstocks for grease manufacturing and main additives for both oil and greases are imported from abroad.

Paraffinic feedstocks, imported from the Steaua Romana and Petrotel refineries are processed in a furfural extraction unit and subsequently in an acetone-toluene dewaxing unit. Naphthenic feedstocks, imported from the Astra refinery, are processed in a furfural extraction unit. Both solvent refined and dewaxed paraffinic and solvent refined naphthenic lube stocks are treated with sulfuric acid and bleaching clay to produce blending components for the finished lube oils.

Component and additive blending is carried on in a batch blending unit. Small amounts of heavy slack wax is refined to micro-crystalline wax by acid and clay treating.

The grease manufacturing unit uses a batch process method and is practically independent from the other process units.

In addition to the process units, Lubrifin S.A. has a boiler house for producing process steam, a mechanical repair shop, an electrical repair shop, and a quality control laboratory.

The mineral oils produced at Lubrifin are: hydraulic oils, turbine oils, engine oils, and oils for metalworking. The lubricating greases produced are: calcium greases, lithium-calcium greases, lithium-calcium-lead greases, and aluminum greases.

Most of the equipment at Lubrifin was put into operation more than 30 to 40 years ago. However, approximately 40 percent of this equipment has now been replaced and a continuing effort is underway to modernize the entire plant.

Figure No. 6 shows the block flow diagram for the refinery and Table C.4.1.1 provides information on process units. The overall material balance of the refinery including comments on losses is discussed in Section C.4.4. Tables C.4.9.6 through 13 in Section C.4.9 shows the products specifications.

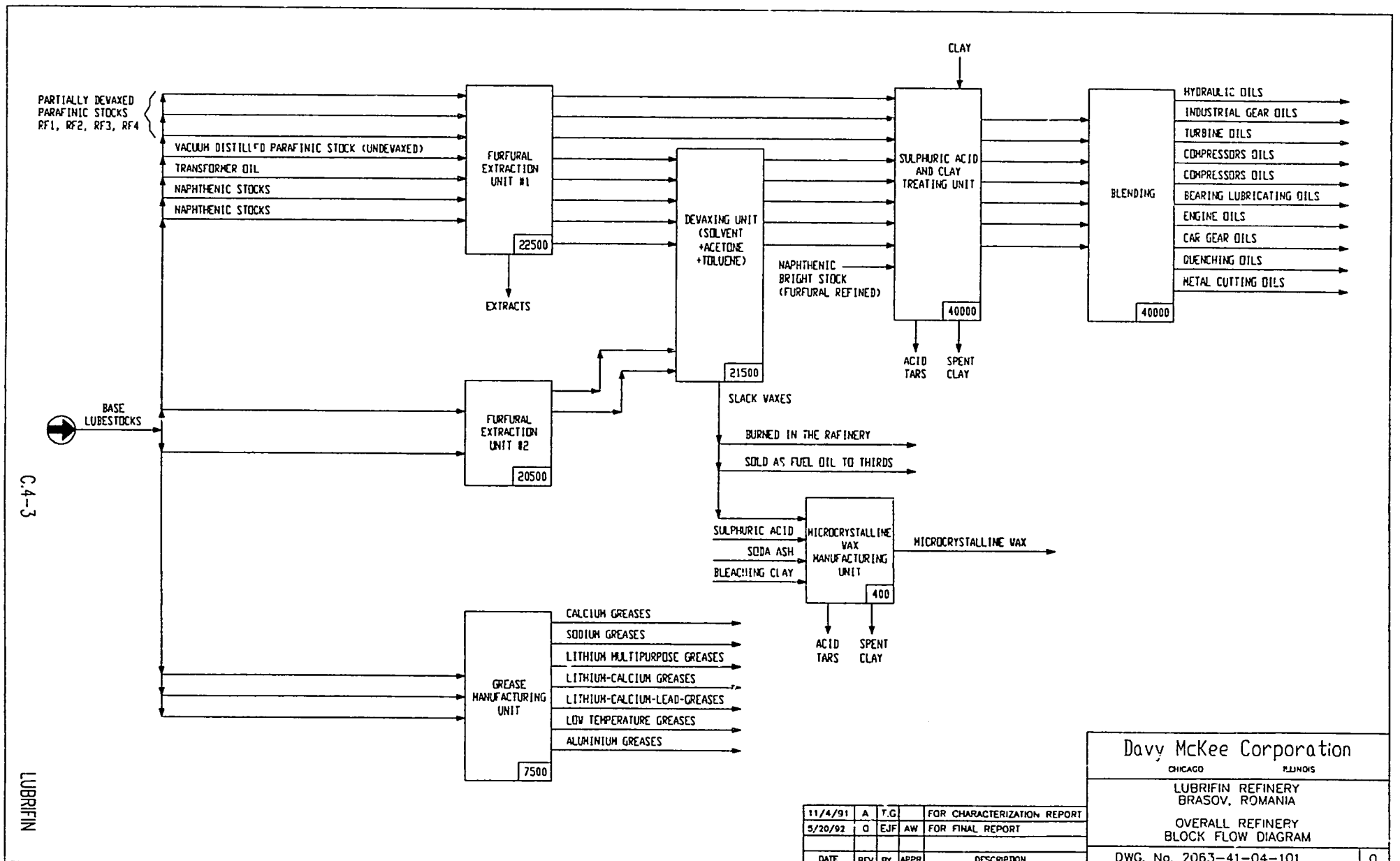
PARTIALLY DEVAXED PARAFINIC STOCKS RF1, RF2, RF3, RF4
VACUUM DISTILLED PARAFINIC STOCK (UNDEVAXED)
TRANSFORMER OIL
NAPHTHENIC STOCKS
NAPHTHENIC STOCKS
BASE LUBESTOCKS
FURFURAL EXTRACTION UNIT #1
22500
EXTRACTS
FURFURAL EXTRACTION UNIT #2
20500
DEVAXING UNIT (SOLVENT +ACETONE +TOLUENE)
21500
NAPHTHENIC BRIGHT STOCK (FURFURAL REFINED)
SLACK VAXES
BURNED IN THE RAFINERY
SOLD AS FUEL OIL TO THIRDS
SULPHURIC ACID
SODA ASH
BLEACHING CLAY
MICROCRYSTALLINE VAX MANUFACTURING UNIT
400
MICROCRYSTALLINE VAX
ACID TARS
SPENT CLAY
GREASE MANUFACTURING UNIT
7500
CALCIUM GREASES
SODIUM GREASES
LITHIUM MULTIPURPOSE GREASES
LITHIUM-CALCIUM GREASES
LITHIUM-CALCIUM-LEAD-GREASES
LOW TEMPERATURE GREASES
ALUMINIUM GREASES
CLAY
SULPHURIC ACID AND CLAY TREATING UNIT
40000
ACID TARS
SPENT CLAY
BLENDING
40000
HYDRAULIC OILS
INDUSTRIAL GEAR OILS
TURBINE OILS
COMPRESSORS OILS
COMPRESSORS OILS
BEARING LUBRICATING OILS
ENGINE OILS
CAR GEAR OILS
QUENCHING OILS
METAL CUTTING OILS
Davy McKee Corporation
CHICAGO ILLINOIS
LUBRIFIN REFINERY
BRASOV, ROMANIA
OVERALL REFINERY
BLOCK FLOW DIAGRAM
DWG. No. 2063-41-04-101
0
DATE REV BY APPR DESCRIPTION
11/4/91 A T.G. FOR CHARACTERIZATION REPORT
5/20/92 0 EJF AW FOR FINAL REPORT

FIGURE 6

TABLE C.4.1.1 - PROCESS UNITS

No.	Name of the Unit	Capacity Mt/Year	Licensor	Designer	Remarks
1	Furfural Extraction #1	22 500	Unknown	Unknown	Built before 1939 revamping in course.
2	Furfural Extraction #2	20 500	ICERP	IPIP	Commissioned 1962. Built by the refinery using old equipment. Revamping in course.
3	Acetone-Toluene Dewaxing	21 500	Unknown	Unknown	Moved to Brasov from prewar refinery dismantled in Bucharest. Planned to be revamped after furfural extraction units completion.
4	Sulfuric Acid and Clay Treating	40 000	Unknown	Unknown	Built after 1939. Some equipment replaced because of corrosion.
5	Blending	40 000	ICERP	IPIP	
6	Microcrystalline Wax Treating	400	Unknown	Lubrifin	Built by the refinery using old equipment. Commissioned in the 70s.
7	Greases Manufacturing	7 500	Unknown	Unknown	Built before 1939. Revamping planned for the coming year.

4.2. Utilities, Services, Offsites

Electricity generation and distribution

Electric power is provided by national network by two cables of 110 kV/6 kV with one standby for emergencies. The 6 kV is distributed by a substation within the refinery. Two power transformers of 1 600 kVA, 6 kV/0.4 kV with substation of 0.4 kV provide the power requirements.

Steam generation and distribution

Process steam is generated by the refinery boiler house by three boilers; two are rated at 4 tonnes/h and one is rated at 10 tonnes per hour. Normal pressure is 1.0 MPa. These units use gas and fuel oil for firing. Boiler feed water is treated chemically.

Condensate collection

Condensate is gravitationally collected at the lowest point in the refinery. The condensate is treated by oil separation and graphite filters. It is then pumped back to the steam boilers.

Fuel supply

Fuel gas (methane) is provided by the national network at rate of 1 500 Nm^3/h. It contains more than 99 percent methane. During the winter a sharp decrease in methane pressure occurs. This drop causes difficulties in unit operation. The refinery uses light slack waxes from the dewaxing unit as liquid fuel in the steam and process heaters.

Freshwater supply

The refinery process water is a combination of surface water and well water. Drinking water is from the city of Brasov. The boiler feed water is (surface water) river water. The cooling tower water is the same as process water.

Water treatment and distribution

The process water is treated prior to use by pH control and settling. The cooling tower water (process water) is used as is and is not treated. The boiler feed water is treated with ion exchangers and phosphates.

Cooling towers

Three cooling towers with a total throughput of 520 cubic meters per hour provide water cooling in the furfural extraction and dewaxing units. In the grease manufacturing unit, water is used once through and then used as make-up water for the cooling towers.

Feedstocks receiving

All feedstocks are shipped by railroad tank cars. The tank cars are unloaded in the storage facility. Additives and chemicals are shipped in railroad tanks, packed in barrels and / or bags, and are stored in the warehouses.

Product blending and shipment

A batch process is used to mix the blending components with the specific additives to manufacture finished lubricants. Most of the additives, except those supplied by Petrotel, are imported to Romania. Products are shipped by railroad or by truck in tanks or packed in drums. Greases are shipped by trucks, and are packed in metal or plastic drums.

Tank farm

Storage capacities at the tank farm are shown in Table C.4.9.1. All tanks are fixed roof type, and most are equipped with heating coils.

Flares, blowdowns and dropout systems

There is no flare system at the refinery. The process furnaces in the furfural extraction units and the hot oil furnaces used for dewaxing and grease manufacturing may be directed into blowdown tanks.

Fire protection

Fire extinguishing capability is foam and water. There is a fourteen-person fire fighting squad at the refinery. In addition, the refinery is located only one kilometer from the Brasov city military fire squad which will assist in the event of a major fire.

4.3. Chemicals and Catalysts Use

The Lubrifin Refinery uses chemicals for processes and for water treatment. Chemical use information is shown in Table C.4.3.1.

TABLE C.4.3.1 - CHEMICALS

Name	Use
Sulfuric acid	Process
Furfural	Process
Acetone	Process
Toluene	Process
Ammonia	Process
Soda ash	Process
Bentonite	Process
Na_3PO_4	Water treatment

4.4. Previous 12 - Month Operating History

Table C.4.4.1 shows the material balance for the last 12 months, against a one year reference period. Due to its peculiar position, Lubrifin has been less affected by the nationwide shortfall in crude supply. It processed the mix of feedstocks at about 85 percent of its typical throughput and produced 86.5 percent products without significant changes in the product slate.

The major cause of approximately 80 percent of the total refinery losses are due to oil lost in acid tars (about 200 tonnes/y) and in spent clay (about 1 000 tonnes/y).

TABLE C.4.4.1 - MATERIAL BALANCE

Inputs	Tonnes/Year	
	Design	Last 12 Months July 1990 - June 1991
Transformer Oil	1 946	1 744
Fr. I Naphthenic	1 532	974
Fr. II Naphthenic	18 717	12 321
UDSH (Bright Stock, Naphthenic)	3 110	3 245
RF1 (Paraffinic, Predewaxed)	6 077	3 055
RF2 (Paraffinic, Predewaxed)	6 530	6 673
RF3 (Paraffinic, Predewaxed)	3 645	4 151
RF4 (Paraffinic, Predewaxed)	1 119	--
Fr. IV (Paraffinic, Distilled)	6 756	4 643
Other Paraffinic Oil Feedstocks	9 743	15 437
LiCa, K100, Naphthenics for Grease Manufacture	6 100	7 096
Fat Raw Materials	1 074	1 196
Additives for Greases	48	31
Alkali for Greases	220	224
Domestic Additives for Oils	508	172
Imported Additives for Oils	399	399
Total In	67 524	57 361
Outputs		
Engine Oils (6 Types)	438	798
Gear Oils (3 Types)	864	434
Hydraulic Oils (19 Types)	28 387	25 175
Turbine Oils (9 Types)	3 460	3 192
Industrial Gear Oils (2 Types)	816	707
Bearings Oils (8 Types)	4 494	2 879
Metal Working Oils (20 Types)	3 074	1 928
Compressor Oils (9 Types)	1 257	1 501
Total Lubricating Oils	39 790	36 676
Greases (28 Types)	7 300	7 554
Fuel Oils	15 900	10 257
Extracts and Slack Wax	1 800	1 509
Losses	2 734	1 365
Total Out	67 524	57 361

4.4.1. Recent Modifications

At present the Lubrifin refinery is modernizing various equipment. It is replacing most of the furfural extraction units and revamping of the dewaxing unit will follow.

4.4.2. Crude Oil Supply

The Lubrifin refinery does not process crude oil. Feedstocks for oils and greases manufacturing were purchased as usual from the local market. Some difficulties were encountered because the primary suppliers, the Steaua, Romania, Astra, and Petrotel refineries had serious problems in crude supply. Consequently the refineries had problems manufacturing the intermediate cuts required by Lubrifin operations.

Tables C.4.9.2 through 5 show the main characteristics of the feedstocks processed, or used as is, by the Lubrifin refinery to manufacture lube oils and greases. Table C.4.9.14 lists the additives used for this purpose.

4.4.3. Operating Experiences

The lack of control and automation instruments makes the operation of the furfural extraction and dewaxing processes less accurate than it could be in that losses could be reduced. Some corrosion of condensing equipment was observed in the furfural extraction units, and this was due to the inappropriate neutralization of furfural.

4.4.4. Impact of Crude Oil Changes

The Lubrifin refinery depends on the quality and quantity of the crude processed by the feedstocks suppliers. For the moment, no significant changes occurred in Romanian crudes quality.

4.4.5. Impact of Product Market Changes

Lubrifin is the only high grade industrial oils manufacturer in Romania. Even though there was a decrease in industrial production in the country, the market for these oils was still open and will remain so in the near future. Competition from imported products will obligate Lubrifin to improve its technical and financial efficiency along with the quality of some of its products.

4.4.6. Impact of Legislation and Social Changes

Lubrifin needs hard currency to import additives and some of the equipment required for revamping the process units. The new legislation gives the company the opportunity to export products and to look for other kinds of financial arrangements. European companies have expressed interest in cooperating with Lubrifin.

4.5. Environmental Considerations

4.5.1. Quality of Local Environment

Lubrifin is located in the middle of the city of Brasov. This is a great handicap for the refinery in terms of meeting environmental regulations requirements.

4.5.2. Current Emissions Control

Gaseous effluents

Neither the gaseous nor liquid fuels generate significant amounts of pollution. Acid tars are burned at the rate of 350 to 400 tonnes/y. This emits approximately 100 tonnes/y of sulfur dioxide into the atmosphere. This quantity is not very large, but the emissions have a negative impact on the quality of atmosphere in the neighborhood.

Sometimes, especially during low atmospheric pressure periods, the grease manufacturing unit generates an unpleasant smell.

Liquid effluents

Storm water from the tank farm, process area, roadways, and roof drains is collected and treated in an API separator. It is then discharged to the waste water treatment facility for oil / water separation. There is no chemical or biological treatment of waste water. The effluents are discharged directly into the city of Brasov sewage system.

Table C.4.5.2.1 shows the waste water quality before it is discharged into the city sewer system.

TABLE C.4.5.2.1 - WASTE WATER QUALITY

Item (mg/l)	Actual
TDS	280 mg
TSS	120-180
COD (mg O_2/l)	290-320
BOD (mg O_2/l)	60-70
TOC	210-240
pH	7.2-7.8
Iron	nil
Petroleum products	30 mg
Phenol	0.05 mg
NH_4	0-2
Chromium	nil
Zinc	nil
Sulfites	30-40
Hardness, German degrees	6-9

Solid waste

Solid waste from the API separator, the tank farms, and the process units bottoms is transported to the Brasov city dump. Approximately 2 800 tonnes/y of spent clays are transported by truck to the city dump. The spent clays contain about 1 000 tonnes of oil.

Sulfur management

Sulfur from the sulfuric acid that is used for oil cuts refining is released into the atmosphere through the burning of acid tars at a rate of about 100 tonnes/y of sulfur dioxide.

Volatile organic compounds (VOC) management

No significant volatile organic compound emissions occur from either the process units or from the tank farms.

Heavy metals management

The refinery processes only distilled feedstocks; therefore, heavy metals do not interfere in the operation.

4.6. Refinery Specific Potential and Opportunities for Improvement

The process units are old, and the control and automation level in these units is low. The refinery began a general revamping program two years ago. In the coming months, most of the old equipment, including heaters, will be replaced. New instruments will be installed in the two furfural extraction units. A new filter was installed and more revamping work will be done in the solvent dewaxing unit after the furfural refining units are completed.

Sulfuric acid and clay treatment needs a special care, as it generates strong pollution and the loss of about 1 000 tonnes/y of valuable oils in the spent clay. Finding a more efficient absorbent to replace the acid treating process, changing filters; and erecting an oil recovery system at the spent clay facility could be a convenient short term solution.

The Lubrifin refinery intends to revamp the grease manufacturing unit; expand the lithium multipurpose and special greases production capacity; and install a new packing facility. These projects could be done in cooperation with some Western European company.

4.7. Refinery Specific Problems and Trends

Lubrifin has an excellent position in the local market. It is the only producer of high grade industrial lubricants, oils and greases. In addition, the refinery is located in the middle of Romania near the highly industrialized city of Brasov. There is a large local demand for these lubricants.

The major problems experienced at the refinery are due to the age of the equipment, the low level of automation, the strict requirements for environmental protection, and dependence on local feedstocks suppliers.

Under the provisions of new legislation for a free market oriented economy, a ???? to exporting products would be advisable. This would help the refinery find the means to finance the planned revamping programs and to buy additives.

4.8. Reference to Database

The information contained in the questionnaire has been formatted into a computerized data base, which is the subject of a separate report.

4.9. Supporting Plant Data

TABLE C.4.9.1	STORAGE CAPACITY
TABLE C.4.9.2	CHARACTERISTICS OF FEEDSTOCKS - NAPHTENIC LUBE CUTS
TABLE 4.9.3	CHARACTERISTICS OF FEEDSTOCKS - PARAFFINIC LUBE CUTS
TABLE 4.9.4	CHARACTERISTICS OF FEEDSTOCKS - FAT RAW MATERIALS
TABLE 4.9.5	CHARACTERISTICS OF FEEDSTOCKS - ALKALI AND SOAP
TABLE 4.9.6	PRODUCT SPECIFICATIONS - HYDRAULIC OILS
TABLE 4.9.7	PRODUCT SPECIFICATIONS - E.P. HYDRAULIC OILS
TABLE 4.9.8	PRODUCT SPECIFICATIONS - TURBINE OILS
TABLE C.4.9.9	PRODUCT SPECIFICATIONS - INDUSTRIAL GEAR OILS
TABLE C.4.9.10	PRODUCT SPECIFICATIONS - METALWORKING OILS
TABLE 4.9.11	PRODUCT SPECIFICATIONS - LITHIUM MULTI PURPOSE GREASES
TABLE 4.9.12	PRODUCT SPECIFICATIONS - LITHIUM-CALCIUM AND LITHIUM CALCIUM-LEAD GREASES
TABLE 4.9.13	PRODUCT SPECIFICATIONS - OTHER GREASES
TABLE 4.9.14	ADDITIVES FOR LUBRICANTS

TABLE C.4.9.1 - STORAGE CAPACITY

Service	Number of Tanks	Total Capacity M^3	Remarks
Lube Feedstocks	27	13 723	Heating Coals Insulated
Grease Feedstocks (Lubes)	9	488	
Solvents and Liquid Chemicals	7	460	
Additives in Drums and Bags			Warehouses 8 000 m^2
Intermediate Products	34	3 163	
Finished Oils	33	708	

TABLE C.4.9.2 - CHARACTERISTICS OF FEEDSTOCKS - NAPHTENIC LUBE CUTS

Specifications	Transformer Oil	Fr I	Fr II	UDSH	Li-Ca	K100
Density at 15 °C Max.		.900	.930			.915
Density at 20 °C Max.	.890			.910	.915	
Viscosity Cst at 20 °C Max.	30					
40 °C						90-110
50 °C		15-23	35-48			
100 °C Max.				28		
Viscosity Index Min.				85	60	60
Flash Point °C Min.	140	165	215	265	210	220
Pour Point °C Max.	-40	-30	-30	+5	-25	-25
Con Carbon % Max.				1	.4	.4
ASTM Color Max.	1.5				4.5	5.5
UNION Color Max.				8		
Supplier	ASTRA, PLOIESTI					
Treatment at OriginVac. Dist.	+	+	+	-	+	+
Deasphalting	-	-	-	+	-	-
Furfural Ref.	-	+	+	+	-	-
Acid Treatment	+	-	-	-	+	+
Clay Treatment	+	-	-	-	+	+
Hydrofinishing	-	+	+	+	-	-

TABLE C.4.9.3 - CHARACTERISTICS OF FEEDSTOCKS - PARAFFINIC LUBE CUTS

Specifications	RF1	RF2	RF3	RF4	Fr IV	Med.
Density at 15 °C Max.					.905	.890
Density at 20 °C Max.	.905	.915	.915	.920		
Viscosity Cst a50 °C Min.	12.6				12.5	
50 °C Range		23-38	38.5-45.5	50-59		24.5-31.5
Viscosity Index Min.	70	65	62		87	85
Flash Point °C Min.	185	205	220	230	235	210
Pour Point °C Max.	+12	+12	+12	+12		+2
Con Carbon % Max.		.15	.2		.4	.15
Union Color Max.					5	5
Supplier	STEAUA					PETROTEL
Treatment at Origin Vac Dist	+	+	+	+	+	+
Predewaxing	+	+	+	+	-	-
Furfural Refining	-	-	-	-	-	+
Solvent Dewaxing	-	-	-	-	-	+
Hydrofinishing	-	-	-	-	-	+

TABLE C.4.9.4 - CHARACTERISTICS OF FEEDSTOCKS - FAT RAW MATERIALS

Specifications	C_{12} Hydro Stearic Acid	Liquid Tally Acid	Stearine Type E	Tallow	Frozen Tech. Oil	Bone Fat	Industrial Fat	Fatty Acids from Lard
Melting Point °C Min.	72		52	40÷50	48			38
Fatty Compounds & Min.%		98		98		97	90	99
Alkaly neutral. number mg.KOH/g	180-190	185	195	192	185	190-210		193
Acidity Index mg.KOH/g	170	170	190			190-210		175
OH Number Min.	147							

TABLE C.4.9.5 - CHARACTERISTICS OF FEEDSTOCKS - ALKALI AND SOAP

Specifications	LiOH	NaOH	CaO	Aluminum Stearate	Lead Stearate
Alkali Content % Min.	53	98	94		
Carbonate Content % Max.	3	1.5	5		
Water % Max.	4.6			2	.5
Al_2O_3 %				6.5-85	
Lead % Min.					9.3
Free Fatty Acids % Max.				16	

TABLE C.4.9.6 - FRODUCT SPECIFICATIONS - HYDRAULIC OILS

Specifications	H21*	HA15**	H18A	H32A	H46A	H60A	H100A
Density at 15 °C Max.		.900	.900	.900	.905	.905	.900
Density at 20 °C Min.	.870-.895						
Viscosity at 40 °C Cst Max.		13-17	16.7-21.2	27.8-33.4	44.4-49	58.3-63.7	90-110
Viscosity at 50 °C Cst	19.4+23						
Viscosity Index Min.	100		90	90	90	90	85
Flash Point °C Min.	180	130	175	175	183	193	220
Pour Point °C Max.	-30	-55	-35	-35	-30	-25	220
Aniline Point °C Min.	90	70					
Neutralization Number mg.KOH/g	.04-.2						.2 max.
Color Union Max.	2						
Color ASTM Max.			1.5	2.0	2.5	2.5	5
Unsolubles in Organic Solvents % Max.	nil		.005	.005	.005	.005	.005
Water and Sediment	nil	nil	nil	nil	nil	nil	nil
Copper Strip Corrosion Test	1a	1a	1b	1b	1b	1b	1
Steel Rust Prevention Test	pass	pass	pass	pass	pass	pass	pass
Oxidation Test 1 000 hrs: Neutralization Number mg/KOH Max.	2		2	2	2	2	2
Demulsifying Time for 40.37-7 cm³ Minutes Max.	30		20	30	30	30	30
Foaming Properties at: Foaming Tendency24 °C	40	30	20	20	20	20	30
93.5 °C	40	60	30	30	50	50	50
24 °C	40	30	25	25	40	40	20
Foam Stability at 24 °C	0	0	0	0	0	0	0
93.5 °C	0	0	0	0	0	0	0
24 °C	0	0	0	0	0	0	0
4 Balls Machine Test: Max Load w/o Welding N		1600					
Diameter of Wearing Spot at 200 N 100 min. mm Max.	.4	.6	.4	.4	.4	.4	.4

*Used for Hydraulic Power Trr ·ission Gears
**Used for Shock Absorbers

TABLE C.4.9.7 - PRODUCT SPECIFICATIONS - E.P. HYDRAULIC OILS

Specifications	H9EP	H15EP	H22EP	H32EP	H46EP	H68EP	H100EP
Density at 15 °C Max.	.895	.895	.895	.895	.895	.895	.905
Viscosity at 20 °C Max.	33						
40 °C		13.5-16.5	19.8-24.2	28.8-31.2	41.4+5 0.6	61.2+74.8	20+110
50 °C	8.5-10.7						
100 °C	2.7-3.3						
Viscosity Index Min.	90	90	95	95	95	90	90
Flash Point °C Min.	140	140	185	200	205	205	210
Pour Point °C Max.	-50	-37	-15	-15	-12	-12	-8
Aniline Point °C Min.			95	95	95	95	95
Neutralization Number mg.KOH/g Max.	2						
Saponification Number mg.KOH/g Max.	2.5						
Water and Sediment	nil	nil	nil	nil	nil	nil	nil
Copper Strip Corrosion Test	1b	1b	1b	1b	1b	1b	1b
Steel Rust Prevention Test	pass	pass	pass	pass	pass	pass	pass
Demulsifying Time for 40.37-3 cm³ Min. Max.		30	30	30	30	45	45
Rotary Bomb Oxidation Resistance Test Minutes Min.		150	150	150	150	150	150
Foam Properties ml: Foam Stability at 24 °C	0	0	0	0	0	0	0
93.5 °C	0	0	0	0	0	0	0
24 °C	0	0	0	0	0	0	0
4 Balls Machine Test: Max Load w/o Welding N		1 500	1 800	1 800	1 800	1 800	1 800
Diameter of Wearing Spot at 200N Load 100 Min., mm Max	.4	.4	.4	.4	.4	.4	.4

TABLE C.4.9.8 - PRODUCT SPECIFICATIONS - TURBINE OILS

Specifications	TbA32E	TbA46E	TbA57E	TbA57K	TK32A	TK57A	TK64NP
Density at 15 °C Max.	.855	.890	.890	.890	.900	.900	.885
Viscosity Cst at: 40 °C	28.8-35.2	41.4-50.6	52-62	52-62	28.8-35.2	52+62	61-68
50 °C	20-25	28-33	33-38				
Viscosity Index, Min.	95	95	95	95	60	70	95
Flash Point °C Min.	200	205	210	210	170	205	220
Pour Point °C Min.	-3	-3	-3	-3	-36	-30	-3
Neutralization Number mg/KOH/g	.1-.25	.1-.25	.1-.25	.15 max	.15 max		
Mineral Acidity and Alkalinity	nil	nil	nil				
Water and Sediment	nil	nil	nil	nil	nil	nil	
Copper Strip Corrosion Test	1b	1b	1b		1b	1	
Steel Rust Prevention Test	pass	pass	pass	pass	pass	pass	pass
Demulsifying Time for 40-37-3 ml, Min., Index	25	30	30	30 (40-40-0)	20 (40-40-0)	30 (40-40-0)	25 (40-40-0)
Rotary Bomb Oxidation Resistance Test Minutes, Min.	240	240	240				
Foaming Properties ml:							
Foaming Tendency at 24 °C	400	400	400	30		20	200
93.5 °C	50	50	50	40		20	30
24 °C	400	400	400	30		20	200
Foam Stability at 24 °C	0	0	0	0		0	0
93.5 °C	0	0	0	0		0	0
24 °C	0	0	0	0		0	0
Oxidation Test: Neutralization Number after Hours at:							
5mg KOH/g		2 000					
2 mg KOH/g	2 000	3 500	2 000				4 000

Notes: Types LA32, LA46, LA57 are very close to TbA32E, TbA46E and TbA57E but oxidation to 2 mg KOH/g time is 1000 hours. TK32A, TK57A, TK64NP, TbA57K are used for turbo compressors, mainly in the fertilizer plants.

TABLE C.4.9.9 - PRODUCT SPECIFICATIONS - INDUSTRIAL GEAR OILS

Specifications	TIN68 EPS	TIN100 EPS	TIN150 EPS	TIN220 EPS	TIN320 EPS	TIN460 EPS	TIN570 EPS
Density at 15 °C Max.	.905	.915	.915	.915	.915	.915	.980
Viscosity at 40 °C Cst	61.1 - 74.8	30-140	135-165	198-242	288-352	415-506	520-620
Flash Point °C Max.	205	210	215	220	220	230	235
Pour Point °C Max.	-15	-15	-15	-15	-10	-10	-5
Copper Strip Corrosion Test	1b	1b	1b	1b	1b	1b	1b
Steel Rust Prevention Test	pass	pass	pass	pass	pass	pass	pass
Foaming Properties ml:							
Foam Stability at	0	0	0	0	0	0	0
24 °C	0	0	0	0	0	0	0
93.5 °C	0	0	0	0	0	0	0
24 °C							
Demulsifying Time for 40-37-3 ml, Minutes, Max.	30	30	30	30	40	50	50
4 Balls Machine Test: Max Load w/o Welding N	2 200	2 300	2 300	2 300	2 500	2 500	2 500

TABLE C.4.9.10 - PRODUCT SPECIFICATIONS - METALWORKING OILS

Specifications	P1H	P1A 1	P1A 2	P1B1	P1B2	P1R Type I	P1R Type 2
Density at 20 °C Max.	.875	.925	.935	.885	.900	.860	.870
Viscosity Cst at 20 °C						5.5-7.5	6-8
50 °C Min.	8.8	18	41	16	23	2.5-3.5	3-4
Flash Point °C Min.	65	160	180	180	190	90	90
Pour Point °C Max.	-20			0	-3		
Water and Sediment	nil	nil	nil	nil	nil		
Sulfur Content % Min.		.5	.5			.3	.3
Chlorine Content % Min.						.35	.35
Copper Strip Corrosion Test	2			1	1	1b	1b
Steel Rust Prevention Test						pass	pass
Foaming Properties ml:							
Foam Stability at 24 °C				0	0	0	0
93.5 °C				0	0	0	0
24 °C				0	0	0	0
4 Balls Machine Test: Max. Load Without Welding N				2 300	2 300	2 000	3 400
Diameter of Wearing Spot at 200 N Load, 100 Minutes, mm, Max.				2.3	2.3	2.2	2.2

TABLE C.4.9.11 - PRODUCT SPECIFICATIONS - LITHIUM MULTI PURPOSE GREASES

Specifications	UM185 Li2	UM185 Li3	UM185 Li2M	UM185 Li3M	UM185 Li2EP	UM185 Li3EP	U175 Li2
Dropping Point °C Min.	185	185	185	185	185	185	175
Penetration at 25 °C mmx 10^{-1}	260-300	215-255	260-300	215-255	260-300	215-255	260-300
Free Alkalis at NaOH % Max	.14	.14			.15	.15	.1
Water Content	nil	nil	nil	nil	nil	nil	nil
Abrasive Suspended Solids	nil	nil	nil				
Colloidal Stability % Oil Separated, Max.	15	15	15	12	16	16	26
Resistance to Water at 20 °C	pass	pass	pass	pass			
Penetration at -30 °C, mm x10^{-1} Max.	130	120	100	80			
Apparent Viscosity at -30 °C, Pa. S. Max.	1 400	1 500					1 100 at -50 °C
Steel Blade Corrosion Test	pass	pass	pass	pass	pass	pass	
Pure (99.95%) Copper Sample Corrosion Test							pass
Oxidation Stability (Bomb Test), Pressure Drop After 100 Hrs at 100 °C, Bar, Max.	.35	.35					
Mechanical Stability (Penetration Decrease after 10000 Cycles) % Max.	15	15	15	15	15	15	
4 Balls Machine Test:							
Max Load w/o Weldings			2 400	2 400	2 200	2 200	
Diameter of Wearing Spot at 200N			1.6	1.6	1.7	1.7	
Shear Stability							250-500

Note: UM185Li2M and UM185Li3M contain molybdenum disulfide.

TABLE C.4.9.12 - PRODUCT SPECIFICATIONS - LITHIUM-CALCIUM AND LITHIUM CALCIUM-LEAD GREASES

Specifications	UM175 LiCa1	UM175 LiCa2	UM175 LiCa3	UM160 LiCaPb 1	UM170 LiCaPb 2	UM175 LiCaPb 2	UM175 LiCaPb2 EP
Dropping Point °C Min.	175	175	175	160	170	175	175
Penetration at 25 °C mmx10^{-1}	305-345	260-300	215-255	305-345	260-300	215-255	260-300
Water Content % Max.	nil	nil	nil	.15	.15	.15	.15
Abrasive Suspended Solids							nil
Colloidal Stability % Oil Separated Max.	18	13	10	18	12	10	10
Free Alkalis as NaOH % Max.	.15	.15	.15				
Penetration at -30 °C mm x10^{-1} Max.				140	120	80	130
Steel Blade Corrosion Test	pass	pass	pass	pass	pass	pass	pass
Oxidation Stability (Bomb Test) Pressure Drop after 100 Hours at 100 °C N/m^2 Max.				105	105	105	105
Mechanical Stability % Max.		40	40		40	40	30
4 Balls Machine Test: Max Load w/o Welding N				2 000	2 100	2 300	2 400
Diameter of Wear Spot at 1500N, mm, Max.				2.0	1.9	1.8	1.7

TABLE C.4.9.13 - PRODUCT SPECIFICATIONS - OTHER GREASES

Specifications	LD100 LiCaPb7 G	U230Ca 2 2EP-M	UTJ70	UTJ6 0	RUL10 0 Ca3	RUL14 5 Na3	RUL16 5 Na4
Dropping Point °C Min.	180	230	70	60	100	145	165
Penetration at 25 °C mmx10^{-1}	75 max.	260-300	270-330		215-255	215-255	170-210
Water Content % Max.	.2		1.5	nil	2.0	.1	.1
Free Alkalis as NaOH % Max.	.2		.2		.2	.2	.2
Neutralization Number, mg KOH/g Max.	.2		0		0	0	0
Abrasive Suspended Solids	nil				nil	nil	nil
Steel Blade Corrosion Test	pass	pass	pass	pass	pass	pass	pass
Resistance to Water at 90 °C	pass	pass					
Heat Stability 72h, Min. Temp °C	100		3h at 60 °C		60	100	100
Oxidation Stability (Bomb Test) Pressure Drop after 100 Hours at 100 °C, Bar, Max.		.35					
4 Balls Machine Test: Max Load w/o Welding		3 600					
N Diameter of Wearing Spot, mm							
Penetration at Low Temp, mm x10^{-1}, Min1.0at°C				100			
-50 °C				50			
Protection Capacity 8 Hrs at 50 °C Steel Plate			pass				
Copper-Zinc Alloy				pass			

Notes: LD180LiCaPb67G is a block type grease, used for open test containing molybdenum disulfide (UTJ70 and UTJ60 are low temperature greases.

TABLE C.4.9.14 - ADDITIVES FOR LUBRICANTS

No.	Name of Additive	Function	Characteristics	
1.	Ionole Shell England	Against Oxidation	Aspect-crystalline Melting Pt-°C 73 Solubility	-soluble only in mineral oil -insoluble in water
2.	Garbacryle F 45 SFOS-France	Pour Point Depressant	Viscosity 100 °C Pour Point ASTM Color	395 Cst (0.5 % 150 N) -33 °C 0.5-1.5
3.	Lubrizole 3123 LUBRIZOL-France	Pour Point Depressant	Density Viscosity	15 °C 0.920-0.930 98.9 °C 52-57 Cst
4.	Oloa 4950 A OROGIL	Package	Phosphorus % Zinc %	5.4 6.3
5.	Lubrizole 3174 LUBRIZOL-France	V.I. Improver	Density 15 °C g/cm³ Viscosity 100 °C	775-790 Cst 0.902-0.908
6.	Lubrizole 859 LUBRIZOL-France	Rust Preventing	Density 15 °C g/cm³ Viscosity 98.9 °C Solubility	0.982-0.988 31-32 Cst -soluble in mineral oils -insoluble in water
7.	Lubrizole 5034 LUBRIZOL-France	Multi-Functional Multipurpose Package	Density 15 °C g/cm³ Viscosity 40 °C Phosphorus % gr. Sulfur % gr. Nitrogen % gr.	0.990-1.10 62-68 Cst 1.85-1.95 18.8-19.5 0.81-1.15
8.	Total 1850 TOTAL-France	V.I. Improver Pour Point Dispersant	Viscosity 40 °C Total Acidity No. Total Basicity No.	64.96 Cst 1 mg.KOH/g 3.3 mg.KOH/g
9.	Total 1800 TOTAL-France	Multipurpose Package Dispersant, Antioxidation and Corrosion Inhibitor	Calcium % gr. Zinc % gr. Magnesium % gr. Phosphorus % gr. Nitrogen % gr.	1.54 1.66 0.90 1.67 0.85
10.	Oloa 4260 C OROGIL-France	Multipurpose Package Dispersant, Antioxidation and Corrosion Inhibitor	Density 15 °C Nitrogen Calcium % gr. Magnesium % gr. Phosphorus % gr. Zinc % gr. Cst mg.KOH/g	0.99 0.54 0.95 0.93 1.7 1.98 80.6
11.	Garbacryle D 47 SFOS-France	VI Improver, Pour Point Depressant, Wax Dope for Dispersing	Aspect Liquid ASTM color Density 20 °C	Viscous 1.5 0.9

TABLE C.4.9.14 (Cont.)

No.	Name of Additive	Function	Characteristics	
12.	Vanlube 664 B VANDERBILT-USA	Oxidation and Corrosion inhibitor, Rust Preventing	Density 20 °C Flash Point °C Ash % Max. Viscosity 40 °C Cst ASTM Color Max. Pour Point Max. Content of Zn %	0.930-0.960 140 0.25 32.8 8 -15 0.14-0.19
13.	Hordalube 250 K	E.P. Component for Metal Working	Density at 20 °C g/cm^3 Chlorine % gr. Aspect Liquid Light Color Pour Point °C Visc at 50 °C Cst Flash Point °C	1.37 58-62 Viscous -6 230-270 195
14.	Paratac ESSO-PARAMINS	Oil Film Thickener	Very Heavy-Bodied Liquid Very Viscous Refraction w/n_D^{20} Flash Point °C Visc at 98.9 °C Cst Min Pour Point °C	White Color 1.4810-1.4820 185 2850 -10
15.	Tricresilphosphate BAYER-Germany	Anti-Rust	Density 15 °C Neutralization no. mg/KOH/g Max. Visc 37.5 °C Cst Water % gr., Max. Refractive Index Phosphorus Flash Point °C	1.136-1.166 0.1 27-29 0.1 1.551 7.8-8.1 243
16.	Anglamole 99 LUBRIZOL-France	Multipurpose	Density 15 °C g/cm$_3$ Visc at 98.9 °C Cst Sulfur % gr. Phosphorus % gr.	1.060-1.070 8.5-9 29.5-31.5 1.5-1.75
17.	Baysilone BAYER-Germany	Antifoaming	Density 20 °C g/cm^3 Visc 25 °C Cst Flash Point °C Min. Pour Point °C Refractive Index n_D^{20}	0.970 1500±5 300 -45 1.403

TABLE C.4.9.14 (Cont.)

No.	Name of Additive	Function	Characteristics	
18.	Vanlube 72 B VANDERBILT-USA	Antioxidant Anti-rust EP Agent	Density at 20 °C g/cm$_3$ Visc at 98.9 °C Cst Flash Point Min. Pour Point °C Max. Solubility	1.12 10.2 180 -19 -soluble in mineral oils -insoluble in water
19.	Diphenil-amine BAYER-Germany	Antioxidant	Purity % Min. Melting Point °C Min. Ash % gr. Max. Solubility	95 50 0.01 -Soluble in Gasoline, Acetone and Carbon Disulfide
20.	P 312 Additive Teleajen-Ploiesti	Overbasic Detergent	Total Basicity No. mg.KOH/g. Min. Sulphide Ash % Min. Calcium % cca. Substances Insoluble in Solvent % Max Water % Max.	200 23 7 0.2 0.2
21.	P 313 Additive ICITPR-PLOIESTI	Detergent Dispersant	Sulphide Ash %Min Total Basicity No. mg.KOH/g Min. Mech Impur % Max Cont of Magnesium Density g/cm^3 Min. Flash Point °C Min	16 150 0.2 3.2 1 150
22.	P 130 Additive Teleajen-Ploiesti	Antioxidant EP	Flash Pt °C Min. Zinc % Min. Phosphorus % Min. Sulphate Ash % cca Water Max. Mech Impur %Max	150 3 2.5 8.5 0.05 0.15
23.	P 601 Additive Teleajen-Ploiesti	Dispersant	Flash Point °C Min Water % Max. Insoluble in Solvents % Max. Content of Nitrogen Total Basicity No. mg.KOH/g Min.	170 0.1 0.15 1.9 25
24.	P 402-D Additive Teleajen-Ploiesti	V.I. Improver	Flash Point °C Min Water	170 Absent

TABLE C.4.9.14 (Cont.)

No.	Name of Additive	Function	Characteristics	
25.	P 301 Additive Teleajen-Ploiesti	Detergent	Barium % Mech Impur Max Water Max.	4-5 0.15 0.2
26.	P 110-S Additive Teleajen-Ploiesti	Antioxidant Anticorroding Anti-rust	Density 15 °C Viscosity 50 °C °E Flash Point °C Min Water Mechanical Impur Sulphate Ash % Min. Zinc % Phosphorus % Sulfur % Corrosion on Copper 1.5% in T 19	1.00-1.15 12 160 Absent 0.08 23 8-9.5 8-9.5 14.5-18 1b
27.	P 101 Additive Teleajen-Ploiesti	Detergent, Antioxidant, Anticorrosive, Pour Point Dispersant	Ash % Min. Cont of Ba % Min. Cont of Phosphorus % Min Cont of Sulfur % Min Organic Acidity mg.KOH/g Max. Mech Impur % Max	5.0 2.2 0.5 1.0 2.2 0.15
28.	P2A-75 Additive	Antioxidant, Anti-rust, Antiwear	Kinematic Visc 40 °C Cst Phosphorus % Min. Zinc % Min. Sulfur % Min. Azote % Min. Water % Max. Zn/Ph Max.	600 6 6 11.5 0.07 0.03 1.05

C. INDIVIDUAL REFINERY DATA

5. PETROBRAZI S.A. - PLOIESTI, ROMANIA

Address: Petrobrazi S.A.
2011 Brazi Prahova District
Ploiesti, Romania

Telephone: 971 4.3121
Telex: 19343
Telefax: 971 26626

Contact: Titus Alexandrescu
Technical Manager

5.1. Summary Description of Refinery

Petrobrazi is a company that operates in the petroleum processing and petrochemical industries. All capital belongs to the Romanian state and could be transferred to the private sector under provisions of the privatization law.

The Petrobrazi refinery, located 12 kilometers southwest of Ploiesti City, is an integrated refinery and petrochemical complex. The Petrobrazi complex has three hydrocarbon processing divisions: petroleum refining, petrochemical processing, and synthetic rubber processing. See Map Figure 1.

The first process units were built at the beginning of the 20th century. The refinery was severely damaged during World War II. In the early 1960s the old units were replaced by new ones.

The crude processing activity is divided into two streams. The first line has an overall capacity of approximately 4 million tonnes/y. It was built in 1961 with successive revamps until 1970. The first line is able to run with low sulfur crude oils. The second line, with an overall capacity of 3.5 million tonnes per year, began operation in 1988 and 1989 and is able to process imported sulfurous crude oils.
The Petrobrazi refinery has the capacity to process 7.5 million tonnes of crude oil per year. In addition to hydrocarbon processing, the refinery has off-site facilities, utilities production capabilities, maintenance and repair shops, blending and storage facilities, laboratories, waste water treatment systems, a crude oil and distilled commercial products piping network, and railroad loading and unloading racks.

The refinery is structured to produce many types of fuels, gasoline, jet fuel, diesel, fuel oils, aromatics C6-C8, feed stocks for black carbon and needle coke, domestic consumption LPG, and delayed coke. Table C.5.1.1 is a list of the process units.

TABLE C.5.1.1 - PROCESS UNITS

No.	Name of the Unit	Capacity Tonnes/Year (Feed)	Licensor	Designer	Year Constructed Remarks
	A. 1st Line				
1	Atmospheric & Vacuum Distillation #1	4 000 000	ICERP	IPIP	1963. Desalting included low sulphur crude.
2	Naphtha Hydrotreater and Splitter #1	1 100 000	Hydrocarbon Research	IPIP	1961
3	Light Naphtha Cat. Reformer	475 000	Hydrocarbon Research	IPIP	1962
4	Heavy Naphtha Cat. Reformer	570 000			
5	Aromatics Extraction	200 000	Hydrocarbon Research		1961
6	Gas Absorption - Fractionation Unit #1	220 000	ICERP	IPIP	
7	Ortho-Xylene Fractionator		Hydrocarbon Research	IPIP	
8	BTX Fractionator #1	80 000	Hydrocarbon Research	IPIP	
9	Ethylbenzene Fractionation #1	25 000	Hydrocarbon Research	IPIP	
10	Diesel Hydrotreater	800 000			
11	Heavy Platformate Splitter	500 000	ICERP	IPIP	
12	Aromatic Extraction #2	200 000		IPIP	
13	Toluene - Xylene Splitter	145 000	ICERP	IPIP	1974
14	Paraxylene Crystallization	135 000	KRUPP		1974
15	Ethylbenzene Fractionator #1	67 000		IPIP	
16	Ortho-xylene Fractionator #2	17 000		IPIP	
17	Metaxylene Isomerization #1	145 000		IPIP	
18	Paraxylene Separation PAREX #1	64 000	UOP	IPIP	1974
19	Fluid Catalytic Cracking Gas Fractionation, LPG Merox	1 100 000	UOP	IPIP	1967

TABLE C.5.1.1 - PROCESS UNITS (Cont.)

No.	Name of the Unit	Capacity Tonnes/Year (Feed)	Licensor	Designer	Year Constructed Remarks
20	Furfural Extraction	250 000	ICERP	IPIP	1974. To produce aromatic concentrates, feedstock for carbon block.
21	Coking #1	550 000	ICERP	IPIP	1964. Low Sulphur Feedstock
22	Coking #2	550 000	ICERP	IPIP	1970. Low Sulphur Feedstock
23	Gas Absorption Fractionation #2	440 000			
24	N-Pentane Isomerization	220 000	USSR	USSR	
	B. 2nd Line				
25	Atmospheric & Vacuum Distillation #2 & LPG Sweetening	3 500 000	ICERP	IPIP	Desalting included. High sulphur crude. 1987.
26	Gas Absorption Fractionation #3, LPG Sweetening Included	78 000	ICERP	IPIP	
27	Naphtha Hydrotreater & Splitter #2	770 000	ICERP	IPIP	1988
28	Jet Fuel Hydrotreater	350 000	ICERP	IPIP	1988
29	Kerosene & Diesel Hydrotreater	720 000	ICERP	IPIP	1988
30	Catalytic Reforming (Platforms)	800 000	UOP	IPIP	1988
31	Ethylbenzene - Ortho-xylene Separation	105 000	ICERP	IPIP	
32	Gas Fractionation	250 000	ICERP	IPIP	
33	Aromatic Extraction #3	440 000	ICERP	IPIP	1988
34	BTK Fractionator #2	200 000	ICERP	IPIP	
35	Metaxylene Isomerization #2	285 000	ICERP	IPIP	
36	Paraxylene Separation Parex #2	340 000	UOP	IPIP	
37	Coking #3 Delayed	820 000	ICERP	IPIP	High Sulphur Feedstock. 1990.
38	Fuel Gas Amine Treating and Sulphur Recovery	70 000	KLAUS	IPIP	1988
39	Fuel Gas Amine Treating and Sulphur Recovery	90 000			

The crude processing scheme has a competitive complexity characterized by a high proportion of secondary and catalytic processes, comparable to advanced refineries in other countries. The feedstock is primarily crude, however, other petroleum products are processed as straight run naphtha, reformed gasoline, natural gasoline from oil fields, propane, propylene, and aromatics.

The overall material balance for 1990 is presented in Table C.5.1.2, which also gives information on the design provisions for some feedstocks and products quantities. Figure No. 7 shows the Block Flow Diagram for the refinery. Table C.5.9.1 lists the product specifications.

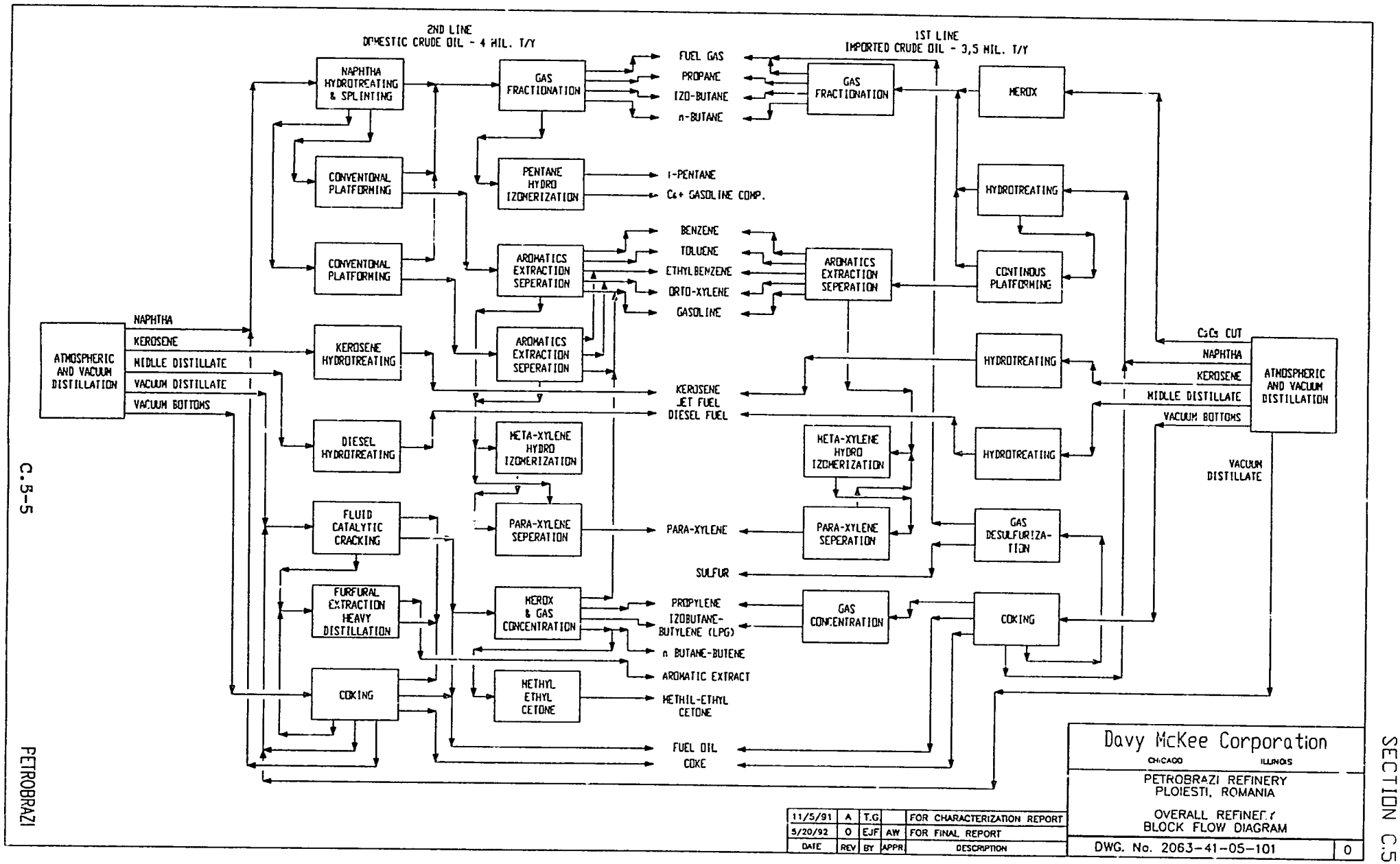
2ND LINE
DOMESTIC CRUDE OIL - 4 MIL. T/Y
1ST LINE
IMPORTED CRUDE OIL - 3,5 MIL. T/Y
ATMOSPHERIC AND VACUUM DISTILLATION
NAPHTHA
KEROSENE
MIDLLE DISTILLATE
VACUUM DISTILLATE
VACUUM BOTTOMS
NAPHTHA HYDROTREATING & SPLINTING
CONVENTONAL PLATFORMING
CONVENTONAL PLATFORMING
KEROSENE HYDROTREATING
DIESEL HYDROTREATING
FLUID CATALYTIC CRACKING
FURFURAL EXTRACTION HEAVY DISTILLATION
COKING
GAS FRACTIONATION
PENTANE HYDRO IZOMERIZATION
AROMATICS EXTRACTION SEPERATION
AROMATICS EXTRACTION SEPERATION
META-XYLENE HYDRO IZOMERIZATION
PARA-XYLENE SEPERATION
MEROX & GAS CONCENTRATION
METHYL ETHYL CETONE
FUEL GAS
PROPANE
IZO-BUTANE
n-BUTANE
i-PENTANE
C6+ GASOLINE COMP.
BENZENE
TOLUENE
ETHYLBENZENE
ORTO-XYLENE
GASOLINE
KEROSENE
JET FUEL
DIESEL FUEL
PARA-XYLENE
SULFUR
PROPYLENE
IZOBUTANE-BUTYLENE (LPG)
n BUTANE-BUTENE
AROMATIC EXTRACT
METHIL-ETHYL CETONE
FUEL OIL
COKE
GAS FRACTIONATION
AROMATICS EXTRACTION SEPERATION
META-XYLENE HYDRO IZOMERIZATION
PARA-XYLENE SEPERATION
GAS CONCENTRATION
MEROX
HYDROTREATING
CONTINOUS PLATFORMING
HYDROTREATING
HYDROTREATING
GAS DESULFURIZA-TION
COKING
C3C5 CUT
NAPHTHA
KEROSENE
MIDLLE DISTILLATE
VACUUM BOTTOMS
VACUUM DISTILLATE
ATMOSPHERIC AND VACUUM DISTILLATION
Davy McKee Corporation
CHICAGO ILLINOIS
PETROBRAZI REFINERY
PLOIESTI, ROMANIA
OVERALL REFINERY
BLOCK FLOW DIAGRAM
DWG. No. 2063-41-05-101
0
DATE REV BY APPR DESCRIPTION
11/5/91 A T.G. FOR CHARACTERIZATION REPORT
5/20/92 0 EJF AW FOR FINAL REPORT

FIGURE 7

TABLE C.5.1.2 - MATERIAL BALANCE 1990

Inputs	1990 (tonnes/y)	Design (tonnes/y)
Imported crude oil	1 240 000	3 500 000
Domestic crude oil	3 182 500	4 000 000
Transfer naphtha for cat. ref	482 500	N.A.
Transfer HDT naphtha	13 500	200 000
Stabilized natural gaso.	67 400	NA
Coker gas from Ploiesti Reforming	6 800	NA
C5-C6 transfer cut	26 800	NA
Unstabilized condensate from the field	10 100	NA
Transfer m-xylene	2 500	NA
Transfer Vac. Dist. (VGO) to FCC	12 600	NA
Total Inputs	5 038 700	-

TABLE C.5.1.2 - MATERIAL BALANCE 1990 - continued

Outputs	1990 (tonnes/y)	Design (tonnes/y)
Fuel gas	238 700	276 703
Ethane enriched gas	3 000	
Propane	19 100	112 823
Propylene	13 100	66 502
Iso-butane	11 000	
Domestic liquefied gas	57 300	88 000
N-butane	13 000	
Butane-butylene	6 700	
Benzene	22 500	
Toluene	48 900	
Ethyl-benzene	6 300	
Orto-xylene	17 600	
Para-xylene	17 700	
Naphtha	220 100	
Gasoline, regular	668 800	
Gasoline, premium	463 800	
Jet fuel	145 900	
Domestic use kerosene	174 000	
Gas oil -15°C	706 300	
Gas oil -5°C	156 400	
Liquid fuel	1 390 500	
Miscellaneous Products		
Aromatic extracts from heavy gas oils	43 000	100 000
Vacuum gas oil	221 600	
Sodium Naphthenate	3 000	
Petroleum coke	139 300	406 250
Coke on catalyst	71 100	80 000
Losses	160 000	
Total outputs	5 038 700	

Note: Processing losses - 118.8 thousands tonnes/y
Losses in mixing, conditioning and delivery field - 41.2 thousands tonnes/y
Total losses - 160.0 thousands tonnes/y

5.2. Utilities, Services, Offsites

Electricity generation and distribution

Electrical power is supplied from the National Electricity Supply Company power station in Brazi, at 35/6 kV for process units erected prior to 1975 and at 110/6 kV for units built after 1975. There are substations within the refinery with transformers. The refinery has no emergency power generation capability.

Steam generation and distribution

The same Brazi power station supplies steam through two thermal substations, one supplies the older refinery and one supplies the new refinery. The steam systems are interconnected between the two process lines. Steam is provided at three pressures, high, medium, and low pressure supplied at 3.1, 1.3, and 0.4 MPa respectively. Low pressure steam is produced from the condensate system. Secondary steam sources within the refinery are the CO and the CR2 waste heat boilers and steam generators.

Condensate system

The Petrobrazi refinery has four condensate collecting systems for the 3.1 and 1.3 MPa systems. Condensate recovery is used to produce a low pressure 0.4 MPa system. The condensate is pumped back to the Brazi thermal power station.

Fuel supply

Fuel gas is supplied by the refinery processes. There is a provision for receiving fuel from the national network during shutdowns. Excess refinery fuel gas is sent directly to the power station. Fuel oil is produced by the refinery. See Table C.5.9.1 The refinery process units are adapted for the use of fuel oil or gas or a combination of the two. Natural gas is high purity methane (more than 99.2 percent). The composition of the refinery fuel gas is shown in Table C.5.2.1.

Table C.5.2.1 - REFINERY FUEL GAS COMPOSITION

Component	Composition, vol%
H_2S	.5 - 1.9
CO	.33 - .45
CO_2	.44 - .5
O_2	.02 - .06
N_2	.25 - .3
H_2	6.2 - 7
C_1	22.1 - 30
$C_2 = + C_2$	12 - 16
C_3^1	3.2 - 9.0
C_3	10.1 - 12
$iC_4 + iC_4$	2.4 - 4.
$2\ C_4$	2.7 - 4.8
iC_4	2.6 - 3
nC_4	7 - 12.2
$iC_5 + nC_5 + C_5$	5 - 7.9
C_5+	5 - 13

Freshwater supply

Process water is supplied from Tirsor (21 wells), Tatarani-Teleajen (35 wells), Tinosu, Nedelea (Prahova River intake), and the Paltinu reservoir on the Doftana river. Capacities are 180, 350, 160, 160, 1 500, and 500 liters per second. Drinking water is supplied from Paltinu. Some of the listed wells can not be used due to underground water contamination with petroleum products.

Water treatment and distribution

Paltinu water for both drinking and process use is pretreated at the source. Nedelea River intake water is treated by coagulation, flocculation, and settling. Aluminum sulfate and KT_2 are used as treatment agents. Cooling tower water is treated in a softening unit (ion exchange). Boiler feed water for the CO boiler and waste heat recovery steam generators is softened on ion exchangers.

Cooling towers

Recycled water is used in the five cooling systems that serve groups of units. The towers are the hyperbolic type with natural draught. Induced draught type cooling towers are used in the recycled water system serving the atmospheric and vacuum distillation and coking units. Recycled cooling water is treated for corrosion protection, chlorinated, and treated with a biocide.

Crude oil receiving

Imported crude oil is transported via a 24 inch pipeline by ITTC, a crude pipeline company, from the port of Constanta. Domestic crude comes via four 8, 10, 12 and 14 inch pipelines. Two interconnected tank farms receive the crude. The total storage capacity for crude is 154 500 cubic meters, which is enough for one week of running at maximum throughput. Other feedstocks, like naphtha, gases, and gas oils, are sent via pipeline from other refineries located near Ploiesti. Appropriate storage facilities are also provided for chemicals and catalysts.

Product blending and shipment

Finished products are blended in tanks by recycling, using capstan and jet type mixers. They are shipped by railroad tank cars, using two groups of loading racks. Some revamping work will be done to improve the old LPG loading racks after the new racks, currently under construction, are completed.

Tank farm

Table C.5.9.2 in Section 5.9 summarizes the storage capacities for crude, intermediate, and finished products.

Flares, blowdowns and dropout system

Two flare systems exist in the Petrobrazi refinery. One is used for the first line of units, built before 1975, and the other is used for the new line, started up in 1989. The two flare systems are interconnected, with a total of seven headers (4+3). All headers are equipped with condensate separators, hydraulic sealing vessels, and flare stacks. Collected condensate is pumped to a slop vessel for reprocessing. Each system has a flare gas recovery facility consisting of a gas holder and a compressor station. Recovered gases are directed to the amine washing and sulfur recovery units joining the refinery fuel gas header.

Fire protection

According to the Romanian fire fighting regulations, 16 000 cubic meters of water are available for fire fighting and are stored in 2 x 5 000, 1 x 2 500 and 2 x 1 000 cubic meter tanks. Two pumping stations, equipped with electric and diesel engine driven pumps, ensure 1.4 MPa pressure in the network. Fire water monitors and hydrants are located in the process and tank farm areas. Five central and several local aero-mechanical foam stations, chemical foam stations, and half fixed units may be used to fight fires in the tank farm areas. Water sprinkling devices are provided to protect the equipment against ignition due to thermal radiation that may result from a nearby fire.

Inside all the process units, portable extinguishers are provided and major equipment is protected by steam curtains or fixed water spraying systems. Gas detectors, smoke detectors, high temperature sensors are used to alarm the fire fighting squad.

A communication system including telephone exchange, wireless telephones, and walkie-talkies may be used for fire alarm and fire fighting operations. The refinery has its own fire fighting squad. In case of a large fire, military fire fighting units stationed near the refinery, can offer support.

5.3. Chemicals and Catalysts Use

Tables C.5.3.1 and C.5.3.2 list chemicals and catalysts used in the refinery.

TABLE C.5.3.1 CHEMICALS

Name	Use
Diethyleneglicol (DEG)	Process
Polyglycol	Process
Monoethanolamine	Process
Ammonia	Process
Borax	Process
Trisodium phosphate	Process and water treatment
Caustic soda	Process
Sulfuric acid	Process
Sodium hydroxide	Process and water treatment
Hidrazine solution	Process and water treatment
Dichlorethane	Process
Aluminum sulphate	Water treatment
Polidurene	Corrosion inhibitor
Polidiazure	Corrosion inhibitor
Trisin	Corrosion inhibitor
Biocides ETA-FS, KDF	Water treatment
Sodium hypochlorite	Water treatment
Tetraethyl lead	Additive for gasolines
Hydrochloric acid	Water treatment
Furfural	Process
Kontol H-407,K-450, K1.30	Corrosion inhibitors
Topanol	Oxidation inhibitor - jet fuels

TABLE C.5.3.2 CATALYSTS

Application	Catalyst	Supplier
Hydrotreating	23 R-15	Vega S.A.
Xylenes isomerization	Zeolytic	Vega S.A.
Naphtha reforming	Polymetallic	Vega S.A.
FCC fluid catalytic cracking	Zeolite	UOP
Paraxylene separation	Parex molecular sieves	UOP

5.4. Previous 12-month operating history

In 1990, Petrobrazi processed less than 64 percent of its design throughput due to the shortage of both domestic and imported crudes. The crude supply problems had a negative effect on economic efficiency and process units operation.

5.4.1. Recent modifications

Since 1987 the refinery has commissioned the following new processing units: atmospheric and vacuum distillation, a platforming facility a xylenes complex, kerosene and gas oil hydrotreating, delayed coking, gas desulfurization and sulfur recovery.

5.4.2. Crude Oil Supply

The Petrobrazi refinery relies on various domestic and imported crude oils for its feedstock.

5.4.3. Operating Experiences

The refinery experienced shortages in the crude supply during the last 12 months and occasionally a lack of spare parts. These problems also caused some mechanical equipment failures and generated frequent shut downs of the process units.

5.4.4. Impact of Crude Oil Changes

Along with the sharp decrease in crude supply (primarily imported), there was a change in the crude pool. The proportion of Romanian low sulfur crudes went from a design of 54 percent to an actual throughput of 72% in 1990.

5.4.5. Impact of Product Market Changes

No significant product market changes occurred in the last 12 months, but there was a general decline in Romanian industrial production. Even though the crude supply dropped below the demand level, the market remained open. The product slate may be changed to adapt to the changing market, within the operating limitations of the process units.

5.4.6. Impact of Legislation and Social Changes

A gradual movement to free market practices will raise problems for management. These problems may require a reduction in personnel in order to achieve higher productivity rates and still be competitive in the market place. Provided it can find reliable partners, the refinery will probably be forced to look for more processing ventures, to get the hard currency needed to finance revamping projects and to import spare parts, catalysts, and chemicals.

5.5. Environmental Considerations

5.5.1. Quality of Local Environment

The Petrobrazi refinery is located within a complex that, in addition to petroleum refining, has petrochemical and synthetic rubber facilities. Volatile organic compound emissions and liquid product leaks have a significant polluting impact on the local environment. This is a concern because the refinery is near the residential areas of Ploiesti city and neighboring small towns.

5.5.2. Current Emissions Control

<u>Gaseous effluents</u>

The refinery operates two flare systems. Storage tanks within the refinery are primarily fixed roof, although there are some floating roof tanks in use. A vapor recovery system is not used for the fixed roof tanks. Flue gases are not treated. Gas desulfurization and sulfur recovery units are in operation. Benzene and other aromatics can temporarily exceed allowable concentrations within specific working areas.

Liquid effluents

Waste waters, which are discharged into the Prahova River, are monitored to meet government regulations by the Environmental Protection and Surveyance Agency for the complex. The tank farm area uses mechanical separators for rain water which is collected before it is discharged into the main sewage system. Industrial sewage and waste water is subject to mechanical separation and chemical and biological treatment prior to discharge. The waste water meets specifications and is discharged in the Prahova River at a maximum rate of 6 800 cubic meters per hour. The sewage system sustained some damage during the three strong earthquakes that have occurred since 1977. The quakes caused uncontrolled leaks from some tanks. This has subsequently caused intense pollution of the underground water table. See Table C.5.5.1 for waste water quality information.

TABLE C.5.2.1 - WASTE WATER QUALITY

Item (mg/l)	Actual (after Treatment)
TDS	Not determined
TSS	40
COD (mg O_2/l)	100
BOD (mg O_2/l)	25
TOC (mg O_2/l)	Not determined
Fe	Not determined
Phenol	0.5
NH_3	Not determined
pH	7.5-8.5
Oil/grease	18-26
Flow rate	---

Solid waste

All sludges that come from process unit cleaning, the API separators, waste water treatment, and tank cleaning are stored in pits. This results in serious soil and underground water table pollution problems. Incinerators for biological waste water sludge are not used due to their low reliability and high level of fuel consumption.

Sulfur management

Hydrogen sulfide is removed from the refinery fuel gas by amine absorption and is converted to sulfur. The light cuts are submitted to caustic and merox treatment. The naphtha, kero, and diesel cuts are submitted to hydrodesulfurization. Hydrogen sulfide rich process waters, from the FCC and gas desulfurization and sulfur recovery units, are stripped by inert gas and burned.

Due to frequent changes and the large number of processed crudes, a sulfur balance for the last 12 months of operation cannot be determined. Petrobrazi did not provide information about sulfur production in 1990.

Considering a 240 000 tonnes fuel gas production and consumption, including the power station, and an average content of 1.5 volume percent of hydrogen sulfide, it can be assumed that about 3 600 tonnes of sulfur are released into the atmosphere, as sulfur oxides. Approximately 1 000 tonnes of sulfur in gasolines, 2 000 tonnes in diesel fuels and 10 000 tonnes in fuel oils leave the refinery in liquid products. In total, about 11 000 tonnes sulfur is in the fuel gas and products.

Volatile organic compounds (VOC) management

Part of the flare gases are recompressed into the fuel gas header. The fixed roof tanks for liquid volatile products discharge vapors into the atmosphere. This results in important losses and air pollution.

Heavy metals management

There are no special process units for heavy metals removal. The FCC feedstock meet the specifications for heavy metals content, to protect catalyst activity. Most of the heavy metals go into the fuel oil.

5.6. Refinery Specific Potential and Opportunities for Improvement

The refinery has a revamping program for the main process units. This program is aimed to improve product quality and reduce energy consumption rates. In the atmospheric and vacuum distillation unit, the vacuum tower internals (valve trays) will be replaced by MELLAPAK structured packing trays.

Due to high levels of LHSV, the catalyst volume in the Catalytic Reforming Unit 2, will be increased by adding a new reactor. A study is underway to support a decision regarding constructing new continuous catalyst regeneration facilities.

Replacing the two old Sinclair Baker high pressure catalytic reforming units with a new low pressure, continuously regenerated catalyst unit is also being studied.

Regarding the FCC unit, an agreement was reached with the licensor (UOP) for improving the reactor and regenerator internals and installing a turboexpander to recover flue gas energy.

5.7. Refinery Specific Problems and Trends

The major problem of the refinery is the crude oil supply. Some of the negative consequences of the supply problem could probably be relieved by improved scheduling of the processing program in coordination with other Ploiesti area refineries that supply Petrobrazi, such as Astra and / or Petrotel. Better scheduling could help to reduce the number of shutdowns, save energy, and increase operating safety.

Losses at the refinery are high. The costs of improvements in crude receiving and product shipping measurements, reducing the amount of gas flared, and recovery volatile emissions compounds from the fixed roof tanks could be supported by the value of the recovered products. The hydrogen balance could be improved by recovering and using hydrogen obtained from pyrolysis and purge gases.

The performance of hydrogen sulfide amine absorption could be improved by supplying the needed amount of amines, since the Petrobrazi petrochemical plant is the main amines producer in the country.

Spare parts tend to be a problem for the refinery. Much of the equipment is supplied by different manufacturers, so that most spare parts cannot be used interchangeably. In addition, frequent equipment failures have resulted because of the poor quality of the spare parts supply and / or scarce performance of some conditioning units as desalters and amine desulfurizers.

5.8. Reference to Database

The information contained in the questionnaire has been formatted into a computerized data base, which is the subject of a separate report.

5.9. Supporting Plant Data

TABLES:

C.5.9.1 - PRODUCT SPECIFICATIONS - C3-C4 CUTS
C.5.9.2 - PRODUCT SPECIFICATIONS - GASOLINES AND NAPHTHA
C.5.9.3 - PRODUCT SPECIFICATIONS - JET FUELS
C.5.9.4 - PRODUCT SPECIFICATIONS - DIESEL FUELS
C.5.9.5 - PRODUCT SPECIFICATIONS - FUEL OILS
C.5.9.6 - PRODUCT SPECIFICATIONS - AROMATIC CONCENTRATE FOR CARBON BLOCK MANUFACTURING
C.5.9.7 - PRODUCT SPECIFICATIONS - COKE
C.5.9.8 - PRODUCT SPECIFICATIONS - AROMATIC HYDROCARBONS
C.5.9.9 - STORAGE CAPACITIES
C.5.9.10 - CRUDE OIL PROPERTIES

TABLE C.5.9.1 - PRODUCT SPECIFICATIONS - C3-C4 CUTS

Specifications	Propylene	Propane	i-Butane	n-Butane	Butane-Butylene Cut	LPG
Composition						
C_1 C_2 C_2^1 % Max	.5	5.0				
Propylene % Min.	90					
Propylene % Max.		2.0				
Propane % Min.	10.0	92.0				
Propane % Max.			7.0	.2 ($C_3 + C_3^1$)	1.0 ($C_3 + C_3^1$)	12.0 ($C_3 + C_3^1$)
i-Butane % Min.			70			
i-Butane % Max.				4.0	3.0	
n-Butane % Min.				94.0	44 (n-Butenes)	87 (All)
n-Butane % Max.	1.0 ($n + iC_4$)	2.0 ($n + C_4$)	22			
C_5+ % Max.				1.0	1.0	1.0
O_2 ppm Max.	1.0					
CO_2 (+acetylene) % Max	.2		nil			
CO ppm Max.	5					
Sulfur Mercaptanes mg/Nm^3 Max.	40	100	100	100	100	200
Sulfur (Total) mg/Nm^3 Max.		.05				
Vapor Pres Bar Max at						
20 °C						2
50 °C						7.5
70 °C						11.0
Water % max.		.05				

TABLE C.5.9.2 - PRODUCT SPECIFICATIONS - GASOLINES AND NAPHTHA

Specifications	RON 72	RON 90	RON 90-93	RON 98	Naphtha
Specific Gravity at 15 °C Max.		.755	.755	.770	.740
RON Min.		90	90	98	
MON Min.	70	80	80	88	
Lead Content gPb/l Max.		.013	.8	.4	.06
Distillation Temp °C Max. at IBP					35
10 Vol %	70	60	60	60	130
50 Vol %	125	120	120	420	140
90 Vol %	180	180	180	180	165
EBP	205	205	205	205	185
Reid Vapor Pressure mm HG Max in Summer	500	450	450	450	500
in Winter	600	550	550	550	
Induction Period (ASTM 525-80) Minutes Min.	400	400	400	400	
Sulfur Content % Max.	.15	.1	.1	.1	.03
Sulfur as Mercaptanes ppm Max.		15	20	15	100
Copper Strip Corrosion Test		1b	1b	1b	
Doctor Test (ASTM 484-96)	neg	neg	neg	neg	
Present Gums (ASTM 381-80) mg/100ml Max.	5				

TABLE C.5.9.3 - PRODUCT SPECIFICATIONS - JET FUELS

Specifications		I	II
Density at 20 °C		.795 Max.	.775-.885
Distillation Temp °C Max at	IBP	150	
	10 Vol %	175	204
	50 Vol %	225	232
	90 Vol %	270	
	98 Vol %	280	288
Viscosity Cst at	-40 °C	16 Max.	
	-34 °C		15 Min.
Freezing Point °C Max.		-60	-53
Flash Point °C Min. (Closed Cup)		30	30
Sulfur Content Wt % Max.		.1	1.0
Sulfur as Mercaptanes Wt % Max.			.001
Aromatic Hydrocarbons Content Vol % Max.		20	20
Smoke Point mm Min.		20	20
Gum mp/100ml Max.		6	6
Iodine Number g/100/g Max.		1.5	
Lower Heat Value Kcal/lg Min.		10 250	10 250

TABLE C.5.9.4 - PRODUCT SPECIFICATIONS - DIESEL FUELS

Specifications	Roman	LD	-35	-25	-15	-10	-5	+5
Density at 15 °C Max.	.865							
Distillation Vol % Min at 300 °C	48	55	48	48	48	48	48	48
360 °C	85	90	85	85	85	85	85	85
Viscosity at 20 °C Cst	2.5-12	2.5-12	2.5-12	2.5-12	2.5-12	2.5-12	2.5-12	2.5-12
Pour Point °C Max.	-15(w)	-15	-35	-25	-15	-10	-5	+5
Flash Point °C Max.	55	55	65	65	55	60	60	60
Sulfur Content % Max.	.5	.5	.5	.5	.5	.5	.5	.5
Con Carbon on 10% Residue % Max.	.35	.25	.40	.40	.40	.40	.45	.45
Ash Content % Max.	.01	.015	.015	.015	.015	.015	.015	.015
Water and Sediment	nil	nil	nil	nil	nil	nil	nil	nil
Copper Corrosion Test	neg	neg	neg	neg	neg	neg	neg	neg
Cetane Number Min.	45	45	40	40	45	45	45	45
Lower Heat Value KCAL/kg Min.	9 900	9 900	9 900	9 900	9 900	9 900	9 900	9900

TABLE C.5.9.5 - PRODUCT SPECIFICATIONS - FUEL OILS

Specifications	P	40/45	50/30	7025	40/42S	50/30S	72/42S	30/50 S
Density at 20 °C Max.	.83							
Vol % Distilled up to								
200 °C Min.	18							
300 °C Min.	98							
Viscosity Cst Max at								
20 °C	2.5							
50 °C		280	350	490	280	350	470	2 100
80 °C		63	70	84	63	70	84	385
100 °C								40
Flash Point °C Min.	38	90	90	90	90	90	90	100
Pour Point °C Max.		45	30	25	42	30	42	50
Sulfur % Max.	.1	1	1	1	3.3	3.3	3.3	3.3
Con Carbon % Max.	.05	14	14	14	14	14	14	25
Ash Content % Max.	.003	.5	.5	.5	.5	.5	.5	.5
Lower Heat Value Kcal/kg Min	10 000	9 500	9 200	9 200	9 400	9 300	9 200	9 200

TABLE C.5.9.6 - PRODUCT SPECIFICATIONS - AROMATIC CONCENTRATE FOR CARBON BLOCK MANUFACTURING

Specifications	Type A	Type B
Density at 20 °C Min.	1.0	.987
Viscosity at 50 °C Cst Min.	10.5	10.5
Aromatic Hydrocarbon Content % Min.	70	70
IBP °C Min.	300	300
Sulfur Content % Max.	.8	.8
Con Carbon % Max.	1.2	1.2
H_2 to C Ratio Max.	1.22	1.32

TABLE C.5.9.7 - PRODUCT SPECIFICATIONS - COKE

Specifications		Type I	Type II	Type III
Ash Content % Max.		.6	.6	.8
Sulfur Content % Max.		.8	1.2	1.4
Volatile Compounds % Max.		11	11	13
Moisture % Max.		2	2	2
Lower Heat Value KCAL/kg Min.		8 200	8 200	8 200
Particles Size mm %	More Than 10 Min.	50	50	50
	Less Than 10 Max.	50	50	50

TABLE C.5.9.8 - PRODUCT SPECIFICATIONS - AROMATIC HYDROCARBONS

Specifications	Benzene	Toluene	Ethyibenzene	O-Xylene	P-xylene
Density at 20 °C	.876-.880	.869-.875	.865-.875	.877-.880	.860-.866
Boiling Range °C	1 °C Containing 80.1 °C	1 °C Containing 110.6 °C	135.5-136.5	143.0-144.8	137.7-138.8
Crystallization Point °C	+5				
Bromine No. g/100g Max.	.3				
Sulfur Content ppm Max.	10	free	free		free
Nonaromatic Hydrocarbons % Max.		1.5	.3		free
Copper Corrosion Test		no trace			
Ethylbenzene % Min.			99.6		
Retractive Index N_D^{20}				1 500-1 506	
Paraxylene % max					99.2
Chlorinated organic compounds					free

TABLE C.5.9. - STORAGE CAPACITIES

Product	No. of Tanks	Storage Capacity m^3
Crude	10	154 500
Intermediate Cuts		
Virgin Naphtha	16	4 880
Kero	7	11 300
Diesel	16	25 100
FCC and Coking Gasolines	13	14 000
FCC and Coking Gasoils	22	39 200
VGO	7	49 000
Fuel Oils Components	10	30 550
BTX Aromatics	51	26 640
Finished Products		
Propane	2	2 000
Propylene	2	2 000
C_3-C_3^1 Cut	7	4 200
i-Butane	2	2 000
n-Butane	2	2 000
Benzene	8	4 400
Toluene	6	2 800
Ethylbenzene	5	2 120
Poraxylene	6	3 400
Orthoxylene	5	1 440
Metaxylene Mixed Xylenes	4	1 100
Naphtha	10	46 300
Octanic Gasolines	17	77 000
Jet Fuel	4	16 300
Kero	2	2 000
Diesel Fuels	12	58 000
Aromatic Feedstock for Carbon Block	4	1 200
Fuel Oils	8	55 000

TABLE C.5.9.10 - CRUDE OIL PROPERTIES

Specifications	Domestic Off-Shore	Domestic (average)	Imported Blend A	Imported Blend B
Gravity API	35.95	28.75	32.08	32.14
Sulfur Content %	0.3	0.5	0.2	0.4
Yields on crude, wt%				
Gasoline (C5-207°C)	19.5	18.0	19.3	19.2
Kero + lt gasoil (207-347)	37.2	29.2	29.2	28.1
VGO (34°-520°C)	3-.7	46.4	25.5	25.9

C. INDIVIDUAL REFINERY DATA

6. PETROMIDIA S.A. - NAVODARI, ROMANIA

Address:

Petromidia S.A.
DN 22B Km 23
Navodari, Romania

Telephone: (916) 61877
Telex No.: 14207
Telefax No: (916) 61877

Contact: Vasile Porcisteanu

6.1. Summary Description of Refinery

Petromidia is a company that operates in the petroleum processing and petrochemical industry. All capital belongs to the Romanian state and could be transferred to the private sector under provisions of the law of privatization.

Both the refinery and petrochemical works are located on the coast of the Black Sea about 20 kilometers north of Constanta city and close to the town of Navodari. The Petromidia refinery was built in the middle 1970s.

The proximity to the import crude and product export terminals in Constanta harbor and to the offshore oil fields, where extraction began in the late 1980s, gives the Petromidia refinery some important advantages.

The refinery design basis is a 50-50 percent mixture of light and heavy Iranian crudes with an average sulfur content of 1.4 percent. The crude is processed to produce feedstocks for the petrochemical complex, including naphtha and gases for pyrolysis and C_6-C_8 aromatics, and quality petroleum products such as LPG, gasoline, jet fuel, diesel fuels, liquid fuels.

The process units include an atmospheric and vacuum distillation unit with desalting that is able to process 3.5 million tonnes/y of crude, merox sweetening for C_3-C_5 cut, naphtha hydrotreater, catalytic reforming, aromatics extraction, BTX splitter, ethylbenzene, orthoxylene and paraxylene separation units, metaxylene isomerization, jet fuel hydrodesulfurization, kero-diesel hydrodesulfurization, VGO hydrodesulfurization, FCC, coking, gas fractionation, amine treatment for hydrogen sulfide removal from fuel gases, hydrogen sulfide conversion to sulfur, hydrogen generators.

Figure No. 8 shows the block flow diagram for the refinery. Table C.6.1.1 gives information on process units, and Table C.6.1.2 shows the overall material balance for the past 12 months. Table C.6.9.1 through 6 shows product specifications.

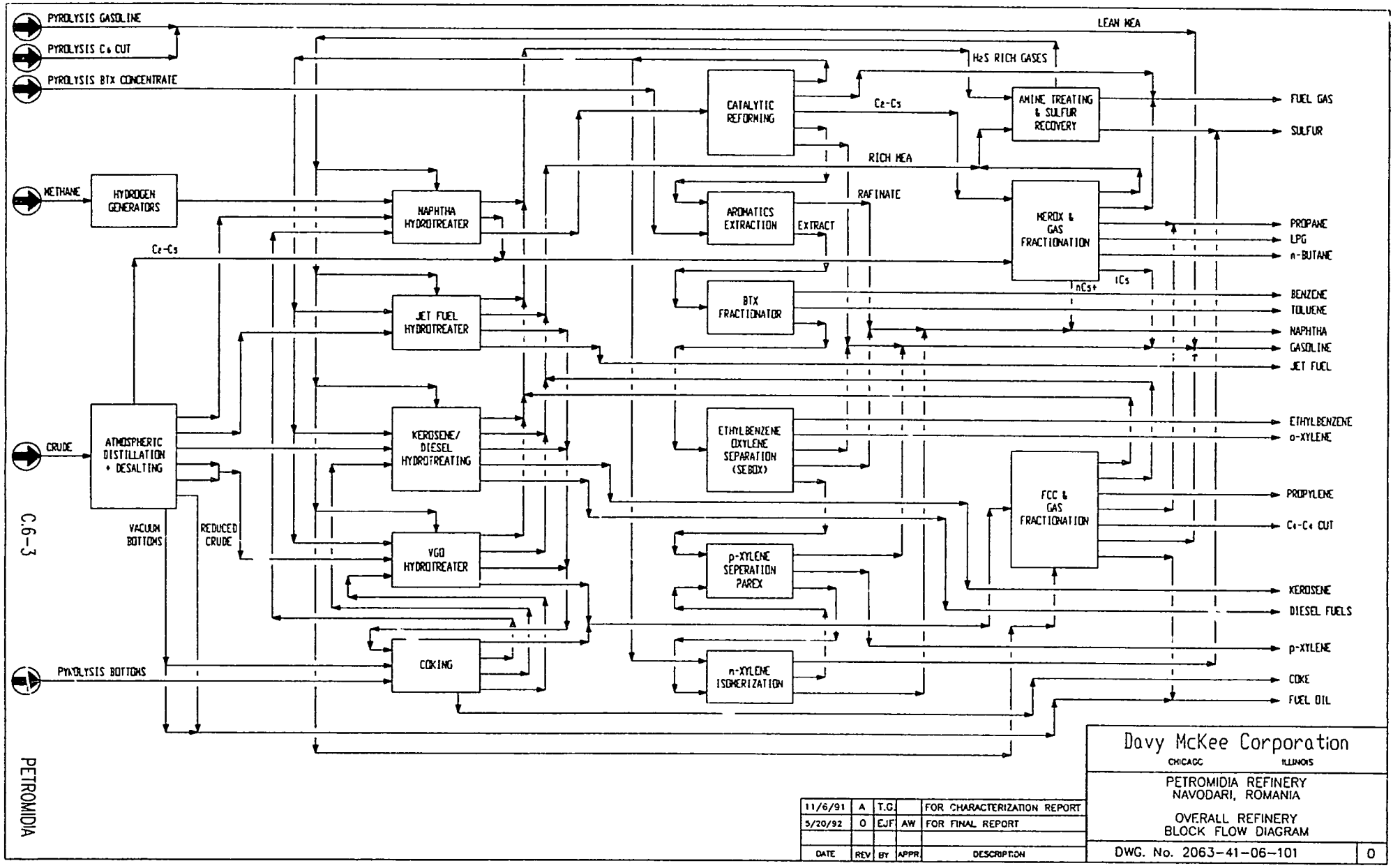
PYROLYSIS GASOLINE
PYROLYSIS C4 CUT
PYROLYSIS BTX CONCENTRATE
METHANE
HYDROGEN GENERATORS
CRUDE
ATMOSPHERIC DISTILLATION + DESALTING
VACUUM BOTTOMS
REDUCED CRUDE
PYROLYSIS BOTTOMS
C2-C5
NAPHTHA HYDROTREATER
JET FUEL HYDROTREATER
KEROSENE/ DIESEL HYDROTREATING
VGO HYDROTREATER
COKING
CATALYTIC REFORMING
AROMATICS EXTRACTION
BTX FRACTIONATOR
ETHYLBENZENE OXYLENE SEPARATION (SEBOX)
p-XYLENE SEPERATION PAREX
m-XYLENE ISOMERIZATION
LEAN MEA
H2S RICH GASES
C2-C5
RICH MEA
RAFINATE
EXTRACT
AMINE TREATING & SULFUR RECOVERY
MEROX & GAS FRACTIONATION
nC5+
iC5
FCC & GAS FRACTIONATION
FUEL GAS
SULFUR
PROPANE
LPG
n-BUTANE
BENZENE
TOLUENE
NAPHTHA
GASOLINE
JET FUEL
ETHYLBENZENE
o-XYLENE
PROPYLENE
C4-C6 CUT
KEROSENE
DIESEL FUELS
p-XYLENE
COKE
FUEL OIL
Davy McKee Corporation
CHICAGO ILLINOIS
PETROMIDIA REFINERY
NAVODARI, ROMANIA
OVERALL REFINERY
BLOCK FLOW DIAGRAM
DWG. No. 2063-41-06-101
0
DATE REV BY APPR DESCRIPTION
11/6/91 A T.G. FOR CHARACTERIZATION REPORT
5/20/92 0 EJF AW FOR FINAL REPORT

FIGURE 8

TABLE C.6.1.1 - PROCESS UNITS

No.	Name of the Unit	Capacity Tonnes/y (Feed)	Licensor	Designer
1	Atmospheric Acid Vacuum Distillation	3 500 000	ICERP	IPIP
2	C_3-C_5 Merox	120 000	UOP	IPIP
3	Naphtha Hydrotreater	800 000	ICERP	IPIP
4	Catalytic Reformer	500 000	UOP	IPIP
5	Aromatics Extraction	420 000	ICERP	IPIP
6	BTX Fractionator	240 000	ICERP	IPIP
7	Ethylbenzene - Orthoxylene Separation	90 000	ICERP	IPIP
8	Metaxylene Isomerization	50 000	ICERP	IPIP
9	Paraxylene Separation (Parex)	50 000	UOP	IPIP
10	Jet Fuel Hydrotreater	340 000	ICERP	IPIP
11	Kero - Diesel Hydrotreater	700 000	ICERP	IPIP
12	VGO Hydrotreater	1 200 000	ICERP	IPIP
13	Fluid Catalytic Cracker	1 000 000	UOP	IPIP
14	Gas Fractionator	200 000	ICERP	IPIP
15	Hydrogen Generator	3x1700H_2	SELAS	IPIP
16	Coking	800 000	ICERP	IPIP
17	Fuel Gas Amine Treating and Sulfur Recovery	220 000	CLAUS	IPIP

TABLE C.6.1.2A - MATERIAL BALANCE (FEEDSTOCK INPUT)

Feedstock Input	Tonnes/y	
	Design	01/06/90-31.05.91
Crude Oil	3 500 000	2 312 385
Vacuum Gas Oil		37 693
Naphtha		3 421
Pyrolysis Gasoline	57 400	27 653
Pyrolysis C_4 Cut		2 514
Pyrolysis Propylene		258
Pyrolysis H_2 Rich Gas		10
Light Gasoline from Offshore		11 837
Gasoil		26 161
Metaxylene		910
Pyrolysis Heavy Bottoms	52 850	3 205
Pyrolysis BTX Concentrate	96 600	382
Methane	21 700	5 100
Pyrolysis C_5 Cut		1 071
TOTAL IN	3 728 550	2 432 600

TABLE C.6.1.2B - MATERIAL BALANCE (PRODUCTS OUTPUT)

Products Output	Tonnes/y	
	Design	01/06/90-31.05.91
Octanic Gasoline	568 750	351 845
Naphtha	407 750	191 102
Jet Fuel	344 400	61 779
Diesel Fuels	464 100	483 953
Fuel Oils	851 200	967 850
Benzene	23 800	3 445
Metaxylene		1 845
Toluene	68 250	9 013
Orthoxylene	9 800	712
Ethylbenzene	7 000	328
Paraxylene	33 950	2 313
Propane	56 700	11 610
n-Butane	30 450	3 235
i-Butane	15 400	478
nC_4-C_4^1 Cut	46 760	1 600
iC_4-C_4^1 Cut	70 140	11 979
Fuel Gas	211 750	69 127
C_3-C_3^1 Cut		137
Propylene	49 000	17 447
LPG		37 681
Coke	220 150	34 930
Sulfur	31 850	131
Coke on Catalyst		29 969
Half Finished Products	2 328 189	35 680
Loss	217 350*	104 411
*Coke on catalyst included.		
TOTAL OUT	3 728 550	2 432 600

6.2. Utilities, Services, Offsites

Electrical generation and distribution

Electrical power for the facility is from the national network and is supplied to two stations. A power station that belongs to the National Electricity Company is located near the refinery, using gas and liquid fuels and supplying power and steam. The electricity enters the refinery through 110 kV line. A transformer converts it to 6 kV and it is redistributed to transfer stations within the refinery.

Steam generation and distribution

The power station produces 1.3 and 3.2 MPa steam. The steam systems within the refinery are loop type. A single steam system can be shut off without the whole facility being shut down. There is a well developed secondary recovery system within the refinery that produces low, 0.4 MPa, and medium, 1.4 MPa, pressure steam in the CO boiler (FCC), vapor condensers, and product coolers.

Condensate collection

There are four condensate stations that collect condensate from different steam systems in the refinery. Before the recovered condensate can be returned to the power station, it must meet thermal conditions of less than 90°C and qualitative standards. If these standards are not met, the condensate is drained. Due to oil contamination and the low performance of the active carbon filters, less than 50 percent of the condensate is returned to the power station.

Fuel supply

The fuel gases used in the refinery are composed primarily of refinery gases that come from the process units. These gases are augmented with gases from the off-shore platform (Petromar) and methane from the national network in order to meet the required fuel make-up level. Liquid fuel is not used within the refinery, but a considerable amount is burned by the neighboring power plant.

Table C.6.2.1 shows an average fuel gas composition.

Table C.6.2.1 - FUEL GAS COMPOSITION

	Refinery	Methane	Off shore Platform	Average
Vol%	55%	30%	15%	100
O_2	.82	.11	.258	.523
N_2	2.89	1.284	.786	2.093
Co	.37	-	-	.203
CO_2	.55	0.02	.34	.413
H_2S	.1	-	-	.055
H_2	38.05	.008	.0047	20.931
C_1	23.71	97.91	87.24	55.518
C_2	23.44	.45	8.89	14.360
C_3^1	2.4	-	-	1.320
C_3	4.02	.165	1.82	2.534
C_4^1	.87	-	-	.478
itn C_4	1.48	.049	.794	.948
itn C_5	.95	-	-	.522
C_6+	.16	-	.095	.102

Freshwater supply

Process water for the facility is from the Danube-Black Sea Channel and / or Navodari Lake, at a capacity of 8 700 cubic meters per hour. Drinking water is from the water system of Constanta. The cooling tower water is recycled. Feedwater for the waste heat recovery steam generator is supplied by the power station.

Cooling towers

The cooling tower water source is the refinery raw water after it is settled and filtered. The units within the refinery use a recycle water system with treatment for corrosion control and biocides. Two pump stations are used, and the cooling tower blowdown is evacuated into the wastewater treatment facility.

Product blending and shipment

Crude arrives at the refinery from the Constanta harbor terminal via pipelines. Other feedstocks are transferred from the petrochemical complex by pipeline. Octanic gasoline and diesel fuel may also be shipped to the harbor by pipeline. Other products are sent by railroad tanks. Railroad loading platforms are divided into two automatic racks, one for white and black products and the other rack for liquified gases. Products are brought to the loading platforms via pipeline. Loading control is by weight.

Tank farm

Table C.6.9.2 shows storage capacities for crude, other feedstocks, intermediate, and finished products. Crude oil storage is in tanks with floating roofs. There are 8 tanks each with a 50 000 cubic meter capacity. This ensures at least a month of operation at maximum throughput. Storage in floating roof tanks is more extended in Petromidia than in other refineries, however some aromatic hydrocarbons are stored in fixed roof tanks with inert gas blanketing.

Flares, blowdown and dropout system

The flare and blowdown system are equipped with three 60 meter high flare stacks. There are four hydrocarbon knockout drums, one for each flare header. Removal of the condensate hydrocarbon is accomplished with two steam driven pumps. A flare stack for gases coming from off-shore platform was installed in the refinery area.

Fire protection

The refinery and petrochemical plant are served by a 140-man fire fighting unit that is equipped with special fire fighting facilities, including water, foam, powder, and compressed nitrogen. All of the tanks are equipped with foam distributors. Tanks that are larger than 2 500 cubic meters have fixed cooling water distributors; tanks less than 2 500 cubic meters may be cooled by movable equipment. Water guns, a first intervention means, and alarm equipment are installed in the process areas. A military fire fighting unit located approximately two kilometers from the refinery and the Constanta city military fire fighting unit can support the refinery and petrochemical fire fighting unit if needed.

6.3. Chemicals and Catalysts Use

Tables C.6.3.1 and C.6.3.2 show chemicals and catalysts used by the refinery.

TABLE C.6.3.1 - CHEMICALS

Name	Use
Ferrous Sulphate	Water Treatment
Sulfuric Acid	Water Treatment
Lime	Water Treatment
Biocide EDF	Water Treatment
Icatrizin	Corrosion Inhibitor
Sodium Hydrochloride	Water Treatment
Sodium Hydroxide	Process Water Treatment
Polyacrylamide	Water Treatment
Ammonium Biophosphate	Water Treatment
Ammonia	Water Treatment
Trisodium Phosphate	Water Treatment
Anticor C2	Corrosion Inhibitor
Nalco 5186	Corrosion Inhibitor
Incor 103P	Corrosion Inhibitor
Kontol K450	Corrosion Inhibitor
Anticor N2	Corrosion Inhibitor
Nalco 5196	Corrosion Inhibitor
E96	Crude Demulsifier-Process
CE5189	Demulsifier - Process
Visco 412	Demulsifier - Process
Ocenol	Antifoaming Agent - Process
Serdas GLN	Antifoaming Agent - Process
DB31	Antifoaming Agent - Process
Dow Corning	Antifoaming Agent - Process
Nalco 673	Antifoaming Agent - Process
Sedipur A,L430	Antifoaming Agent - Process
Topanol M	Antioxidant - Finished Product
Topanol O	Antioxidant - Finished Product

Table C.6.3.1 - CHEMICALS (cont.)

Name	Use
Kerobit BPD	Antioxidant - Process
UOP5	Antioxidant - Process
Monoethanolamine	Process
Diethanolamine	Process
Soda Ash	Process
C2H4 C12	Process (Reforming Catalyst Activator)
Hydrazine	BFW Treatment
Aluminum Sulphate	Water Treatment
Polyglycols PG200	Process
Borax	Antioxidant - Process
Diethylamine	Neutralizant - Process
Para Diethylbenzene	Process (PAREX Dissolvent)
N-Paraffins	Process (PAREX Dissolvent)
Ethylmercaptane	LPG Smelling Agent

TABLE C.6.3.2 - CATALYSTS

Name	Supplier	Use
HT500E	Harshaw	Naphtha Hydrotreating
R50	UOP	Catalytic Reforming
C-20-6-03	CCE	Jet Fuel Hydrotreating
2B-R-15	Vega S.A.	Kero-Diesel Hydrotreating
HT-400-E	Harshaw	VGO Desulphurization
0-750	Engelhard	M-Xylene Isomerization
EKZ-4	Katalistics	Fluid Catalytic Cracking
Activated Alumina	Rhone Poulene	Sulfur Conversion
Merox	UOP	C_2-C_5 Sweetening
G32-E	Girdler	Feed Desulphurization - Hydrogen Generator
NiMo, Zn 0	Craiova Chemical Works	H_3S Absorption - Hydrogen Generator
NC.3, C-11-9-06	Craiova Chemical Works, CCE	Hydrocarbon Reforming - Hydrogen Generator
FeCu, CuZn, Fe-Cr	Craiova Chemical Works	Co Conversion to CO_2 - Hydrogen Generator
NiO	Craiova Chemical Works	CO_2 Conversion to Methane - Hydrogen Generator
Molecular Sieve	UOP	Paraxylene Absorption (Parex Process)

6.4. Previous 12-month operating history

During the period 30 June 1990 to 1 May 1991, the refinery processed 2.3 million tonnes of crude oil at 66 percent of the designed throughput. During the same period of 1989, 3.4 million tonnes of crude were processed. Frequently, the lack of crude forced the refinery to shut down the process units. Additional shut downs occurred because of equipment failures and product shipment difficulties.

6.4.1. Recent modifications

A VGO hydrodesulfurizer was built but it was used partially only for FCC feedstock conditioning. The crude unit is under revamp so as to increase capacity of 3.5 mm tonnes/y to 5.2 mm tonnes/y.

6.4.2. Crude Oil Supply

During the last year the refinery used 14 different types of imported crude oil. Table C.6.9.3 shows the results of a crude survey made by the refinery laboratory on average samples of processed crude. This table also shows the properties of other feedstocks processed by the refinery.

6.4.3. Operating Experiences

The main operating problems during the last year were shutdowns related to the shortage of crude, equipment failures and product shipments. Due to a shortage of amines, the onstream time of the flue gas desulfurization and sulfur recovery units were greatly reduced which resulted in release of sulfur product into the atmosphere. Poor performance of the hydrogen unit was due to CO and CO_2 contamination, which lead to high hydrogen stream consumption in the process units. The CO boiler in the FCC unit was not operated, which resulted in very poor energy efficiency.

6.4.4. Impact of Crude Oil Changes

Processed crudes were different from the design basis. They contained 25 percent less naphtha, and the naphthenes content was only 40 percent of the design provisions. This means roughly that only 30 percent of the aromatics expected to be generated by catalytic reforming were actually produced. To ensure a normal octane level of gasoline, the refinery was forced to shut down the aromatics extraction and all other aromatics separation units. This resulted in reduced profits expected from petrochemical feedstocks and products manufacturing.

6.4.5. Impact of Product Market Changes

The domestic market does not generate significant problems to Petromidia. However, the coke contains too much sulfur to be suitable for metallurgy, and so it goes to the cement industry, at lower prices.

Petromidia relies only on imported crude. Soon the refinery will have to increase its processing operations, provided suitable customers can be found. Then the main products will have to meet international specifications, especially regarding the unleaded gasoline octane number and the sulfur content of both gasolines and diesel fuels. Subsequently, Petromidia needs to enlarge the octane potential, raise the catalytic reforming performance, and perhaps start MTBE production and push the hydrodesulfurization severity, which needs more hydrogen.

6.4.6. Impact of Legislation and Social Changes

New legislation might exert two kinds of influences. One general trend will be to a free market economy. The laws connected with this will offer the refinery new opportunities for improving the crude supply, revamping the existing units and constructing new units. This will certainly intensify the refinery's orientation to the international market. But, on the other hand, the severity of the environmental protection regulations that can be expected will require improvements in the gas treatment and burning policy, better housekeeping, intensified use of water treatment facilities, and better management of sludges.

6.5. Environmental Considerations

6.5.1. Quality of Local Environment

The refinery is located close to the Black Sea in an intensely populated residential and resort area. This has raised design and operation problems and concerns about environmental protection. Concern for the impact of the refinery location on ground water contamination has led to an extensive industrial sewage and ground water collection system to protect the local environment and the Black Sea. By design, steps were taken to prevent air and ground pollution.

6.5.2. Current Emissions Control

<u>Gaseous effluents</u>

Petromidia uses floating roof tanks for crude storage. A conservation valve is used for vent control for the fixed roof tanks. The fixed roof tanks for aromatics use a nitrogen blanket. There are three flares within the refinery with a design maximum capacity of 30 million cubic meters per year. A facility for sulfur recovery is in operation. Flue gas is not treated within the facility. Benzene measurements in the units and tank farms area were under maximum allowable levels.

However, Petromidia does pollute the atmosphere, in a particularly sensitive area, due to the low level of performance of the amine gas treating units, the high amount of flare burned gases and, indirectly, by selling a heavy sulfur and heavy metals rich fuel oil to the neighbor power station.

Fuel gas desulfurization could be solved in a very short time by changing the policy of amines supply. To diminish quantity of gases burned in the flares, a study that considers various solutions, including recompression in the natural gas network, should be conducted. Improving the quality of the heavy fuel oil needs to be evaluated in context with overall SO_2 emissions in the country. Flue gas desulfuization should also be evaluated.

Liquid effluents

Storm water from the tank farm, process area, roadways, and roof drains are treated prior to discharge by the waste water treatment facility for the complex, which discharges into the Buhaz stream. A network of underground drains and curbs direct ground water away from contamination by hydrocarbons.

The waste water facilities use API separators and chemical and biological treatment prior to discharge. Skimmed oil is pumped to a storage tank for reprocessing.

TABLE C.6.5.1 - WASTE WATER QUALITY

Item (mg/l)	Actual
TDS	40.0
TSS	1 000.0
COD (mg O_2/l)	150.0
BOD (mg O_2/l)	15.0
Oil	5.0
Phenol	1.0
Sulfides	0.3
pH	6.5 - 7.5
Flow rate (m^3/h)	2 523.0

Solid wastes

Sludge from the waste water treatment facility are thickened and filtered. Spent catalysts are disposed of in a dump. One crude tank was cleaned in the previous 12 years and the residue was disposed of in a specially built pit. Atmospheric and vacuum bottoms stills are disposed of in the same pit. Estimated crude tankage silt quantity is approximately 2 000 tonnes/y.

Sulfur management

Sulfur recovery is 56 percent by design and operated at 6.97 percent recovery in 1989 and down to 0.35 percent for the last 12 months. During last 12 months, 29 000 to 40 000 tonnes of sulfur entered the refinery. About 2 500 tonnes left in diesel fuels, 3 100 to 3 800 left in fuel oils, and the other 4 500 tonnes left in other streams including the flue gases from the heaters and combustion gases from the flare stacks. Only 131 tonnes were recovered as sulfur.

Volatile organic compounds (VOC) management

The Petromidia refinery has a flare system with condensate collection. Floating roof tanks are used for crude storage and volatile products. A vapor recovery system does not exist for the fixed roof tanks.

Heavy metals management

The refinery does not operate any heavy metals removing process. Practically all heavy metals leave in fuel oils and on spent catalysts.

6.6. Refinery Specific Potential and Opportunities for Improvement

The refinery has a revamping program under construction. It includes changing the desalter internals by a Petreco design, improving the atmospheric and vacuum distillation (heaters, heat exchangers, tower internals) to increase energy efficiency and unit flexibility, and building an MTBE unit. Some other possible improvements might be to extend the shipment of jet fuel by pipeline to Constanta terminal, as the pipeline now in use is only for gasoline and gas oil, using hot feed for the FCC unit instead of wing cooled feed from storage, repairing thermal insulation, improving housekeeping, and running amine treatment at a normal level of performance.

6.7. Refinery Specific Problems and Trends

Petromidia has some peculiar problems related to location, crude supply, product slate, and process units.

A study is recommended to find ways to utilize peak production of C_3-C_4 components. Means to ship excess production are not available and the alternative is to flare this otherwise valuable product.

Aromatics production is inferior to design provisions. An MTBE unit could increase the octane gasoline pool. Also improving cat reforming and FCC performance could contribute to this.

Hydrogen balance can be improved by finding opportunities to use purge streams and pyrolysis gases as sources. In the last 12 months, more than 1 500 tonnes of hydrogen were burned as fuel gas.

Equipment, mainly pumps and compressors, should be gradually upgraded in order to curtail shutdowns caused by mechanical failures.

Sulfur recovery

Petromidia is unable to desulfurize the gases to a satisfactory level.

6.8. Reference to Database

The information contained in the questionnaire has been formatted into a computerized data base, which is the subject of a separate report.

6.9. Supporting Plant Data

TABLES:

C.6.9.1	PRODUCT SPECIFICATIONS - C_3-C_4
C.6.9.2	PRODUCT SPECIFICATIONS - NAPHTHA AND GASOLINE
C.6.9.3	PRODUCT SPECIFICATIONS - JET FUEL
C.6.9.4	PRODUCT SPECIFICATIONS - DIESEL FUELS
C.6.9.5	PRODUCT SPECIFICATIONS - FUEL OILS
C.6.9.6	PRODUCT SPECIFICATIONS - AROMATIC HYDROCARBONS
C.6.9.7	STORAGE CAPACITIES
C.6.9.8	PROPERTIES OF CRUDES PROCESSED BETWEEN JUNE 1990 AND MAY 1991
C.6.9.9	PROPERTIES OF OTHER FEEDSTOCK
C.6.9.10	PROPERTIES OF OTHER LIQUID CUTS

TABLE C.6.9.1 - PRODUCT SPECIFICATIONS - C_3-C_4

Specifications	Propylene	Propane	N-Butane	i-Butane	LPG
Vapor Pressure at 50 °C Bar Max.					9.5
Butane and Heavier Vol % Max.	.2	.2			
i-Butane Vol % Min.				80	87
n-Butane Vol % Min.			90		
Sulfur ppm Max.	5		100	135	500
Moisture % Max.		.05			

TABLE C.6.9.2 - PRODUCT SPECIFICATIONS - NAPHTHA AND GASOLINE

Specifications		Naphtha	Gasoline
RON Clear Min.			90
Distillation, Temp °C Max at	10 Vol %	130	65
	50 Vol %	140	125
	90 Vol %	163	
	EP	185	215
Reid Vapor Pressure mm Hg Max.		500	600
Sulfur Content % Max.		.15	.03

TABLE C.6.9.3 - PRODUCT SPECIFICATIONS - JET FUEL

Specifications		
Distillation T°C Max at	10 Vol %	204
	50 Vol %	232
	EP	288
Viscosity at -34 °C Cst Min.		15
Freezing Point °C Max.		-53
Flash Point °C Min. (Closed Cup)		30
Sulfur Content, Wt % Max.		.1
Sulfur as Mercaptanes Wt % Max.		.001
Aromatic Hydrocarbon Content Vol % Max.		20
Smoke Point mm Min.		20
Present Gumes, mg/100 ml, Max.		6
Lower Heat Value, Kcal/kg Min.		10 250

TABLE C.6.9.4 - PRODUCT SPECIFICATIONS - DIESEL FUELS

Specifications		Type -12	Type -15
Density at 15 °C Max.		.840	
Distillation Vol % Min. at	300 °C	50	48
	300 °C	98	85
Viscosity Cst at 20 °C		2-8.5	2.5-12
Pour Point °C Max.		-12	-15
Flash Point °C Min.		60	55
Sulfur Content % Max.		.5	.5
Con Carbon on 10% Residue % Max.		.25	.40
Water and Sediment		nil	nil
Copper Strip Corrosion Test		neg	neg
Cetane Number Min.			45

TABLE C.6.9.5 - PRODUCT SPECIFICATIONS - FUEL OILS

Specifications	Type 50/30S	Type 300/50S
Viscosity at 50 °C Cst. Max.	350	2 100
Flash Point °C Min.	90	100
Pour Point °C Max.	30	50
Sulfur Content % Max.	3.3	4.5
Con Carbon % Max.	14	25
Ash Content % Max.	.5	.5

TABLE C.6.9.6 - PRODUCT SPECIFICATIONS - AROMATIC HYDROCARBONS

Specifications	Benzene	Toluene	Ethylbenzene	O-Xylene	P-Xylene
Density at 20 °C	.876-.880	.869-.873	.865-.878	.877-.880	.860-.866
Boiling Range °C	1 °C including 80 °C	1 °C including 110.6 °C	135.5-136.5	143-144.8	137.7-135.8
Bromine Number g/100g Max.	.3	.1			
Crystallization Point °C	+5				
Sulfur Content ppm Max.	10	free	free		free
Nonaromatic Hydrocarbons % Max.		1.5	.3		free
Copper Strip Corrosion Test		no trace			
Ethylbenzene % Min.			99.6		
Refractive Index N_D^{20}				1.500-1.506	
Paraxylene % Min.					99.2
Chlorinated Organic Compounds					free

TABLE C.6.9.7 - STORAGE CAPACITIES

A. Feedstocks	Roof Type	No. of Tanks	Capacity M^3 Total
Crude Oil	F	8	400 000
Aromatic Concentrate	C	2	4 000
Pyrolysis Heavy Bottoms	C	1	200
Polyglycols (Solvent for Aromatic Extracting)	C	1	200
N-Paraffins (Dissolvent in Parex Process)	C	1	400
Paradeb (Dissolvent in Parex Process)	C	2	1 400
Sodium Hydroxide	C	4	800
B. Intermediate			
Virgin Kerosene	F	1	5 000
Virgin Gasoil	F	3	15 000
VGO	F	8	40 000
Vacuum Bottoms	C	2	6 300
Light Hydrotreated Naphtha	F	1	3 150
Heavy Hydrotreated Naphtha	F	2	2 000
Hydrotreated Diesel	C	6	60 000
Aromatic Concentrate	C	2	4 000
Extract	C	2	2 000
Raffinate (Naphtha Comp.)	F	1	2 000
Xylenes (Mixed)	C	11	20 400
FCC Gasoline	F	2	20 000
Coking Gasoline	F	1	3 150
Gasoline Components	F	2	4 000
Slops	C	2	2 000
C. Products			
Propane	S	2	2 000
Propylene	S	4	4 000
n-Butane	S	2	2 000
i-Butane	S	2	2 000
LPG	S	3	5 400
C_3-C_4 Cut	S	3	5 400
i-Pentane	S	2	2 000
n-Pentane	S	1	1 000
Naphtha	F	4	20 000
Octanic Gasoline	F	4	40 000
Jet Fuel	F	6	10 300
	C	2	4 000
Fuel Oil	C	6	60 000

Table C.6.9.7 (cont.)

C. Products	Roof Type	No. of Tanks	Capacity M^3 Total
Benzene	F	2	6 300
	C	2	1 400
Toluene	F	2	4 000
	C	2	1 400
Ethylbenzene	F	2	800
	C	2	200
Paraxylene	F	2	2 000
	C	3	1 200
Orthoxylene	C	3	400

F-Floating Roof
C-Fixed Roof
S-Sphere

Note: Finished diesel fuel is blended and stored in the hydrotreated diesel tanks.

TABLE C.6.9.8 - PROPERTIES OF CRUDES PROCESSED BETWEEN JUNE 1990 AND MAY 1991

Specifications	
Density at 15 °C	.8675
Viscosity at 20°C Cst	15.5
Sulfur Content Wt %	1.68
C_1-C_5 Wt % on Crude	.4
56-156 °C Wt % on Crude	12.93
Paraffins %	71.55
Oleffins %	.45
Naphthenes %	13.12
Aromatics %	14.67
156-350 °C Wt % on Crude	24.8
Sulfur Content %	.48
350-525 °C Wt % on Crude	24.8
Sulfur Content %	1.29
525+ (Residue) Wt % on Crude	37.04
Sulfur	3.43

TABLE C.6.9.9 - PROPERTIES OF OTHER FEEDSTOCK

Specifications	
Light Gasoline from Offshore, Composition Wt % C_3	.06
iC_4	.54
nC_4	3.89
iC_5	28.68
nC_5	20.06
C_6	22.28
C_7+	24.49
Pyrolysis Light Gasolines (C_6 Cut) Density at 20 °C	.625
Bromine Number g/100g	50-80
Oleffin Content % Max.	40
Boiling Range	70.85

TABLE C.6.9.10 - PROPERTIES OF OTHER LIQUID CUTS

Specifications	Gasoline	BTX	Heavy Bottoms
Density at 20 °C	.825	.735	1.1
Boiling Range °C	55-210	80-185	204-538
Aromatic Hydrocarbons Content Min.	65		
Diene Number Wt % Max.		.1	
Bromine Number g/100g Max.		1.0	
C_9+ Wt % Max.		1.0	
Present Gums, mg/100g Max.		1.0	
Flash Point °C Min.			120
Molecular Weight			300-350

C. INDIVIDUAL REFINERY DATA

7. PETROTEL S.A. - PLOIESTI, ROMANIA

Address: Petrotel S.A.
Mihai Bravu St. 235
2000 Ploiesti, Romania

Telephone: (71) 44151
Telex No.: 19275
Telefax No: (71) 42031

Contact: Emilian Moiceanu
Technical Director

7.1. Summary Description of Refinery

Petrotel S.A. is a petroleum processing and petrochemical company. All capital belongs to the Romanian state and could be transferred to the private sector under the provisions of the law of privatization.

The Petrotel refinery and petrochemical complex is located on the east side of the city of Ploiesti approximately 6 kilometers from the center of the city. The refinery site occupies an area of 235 hectares near the Teleajen River. Originally built in 1904, the refinery was owned by Standard Oil of New Jersey until 1948, when it was nationalized. See Map Figure 1.

The plant has been upgraded numerous times throughout its history. Units were rebuilt after receiving extensive damage during World War II. During 1955 and 1959, a Soviet design line for lube oils manufacturing was built and in the middle of the 1960s the additives manufacturing plant was commissioned.

In 1977, the refinery's capacity for processing imported high sulfur crude oil was upgraded to 3.5 million tonnes/y. The new units were of Romanian design, although some were under the UOP license, and included an atmospheric and vacuum distillation unit, gasoline hydrofinishing, catalytic reforming, gas fractionation, kerosene and gas oil hydrodesulfurization, normal paraffin (C_9-C_{13})

separation of Chinese license, a fluid catalytic cracking unit, a delayed coking plant, and a gas desulfurization and sulfur recovery plant. A visbreaker was recently commissioned. This modernization allowed the refinery to increase its capacity and diversify its product base, along with supplying feedstocks to the petrochemical complex which was built in the same period. Table C.7.1.1 shows the main process units.

The overall material balance for 1990 is presented in Table C.7.1.2. Operations during the last 12 months is compared to reference data based on design provisions and / or on earlier results. The refinery Block Flow Diagram is shown in Figure No. 9.

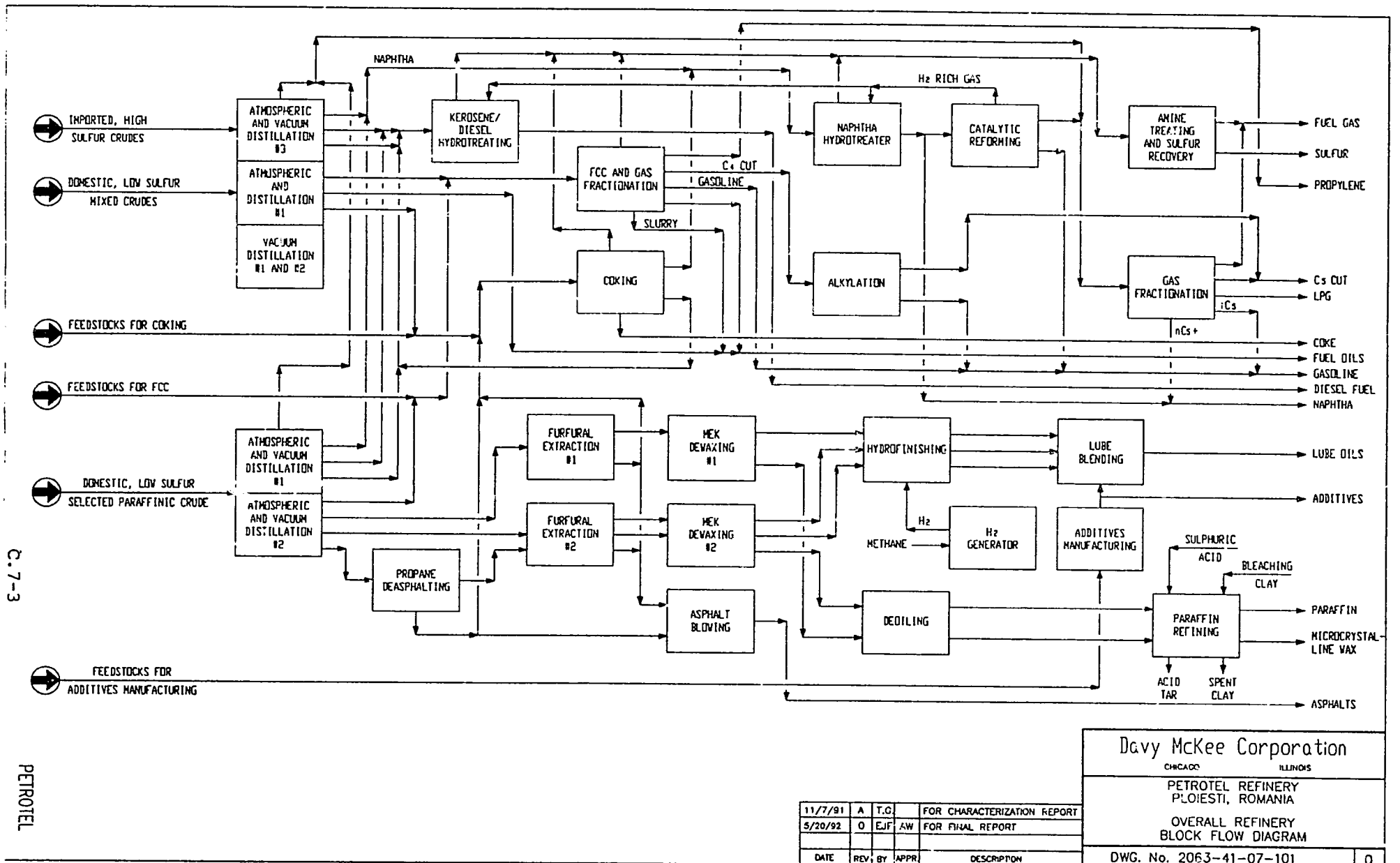

DATE	REV	BY	APPR	DESCRIPTION
11/7/91	A	T.C.		FOR CHARACTERIZATION REPORT
5/20/92	0	EJF	AW	FOR FINAL REPORT

Davy McKee Corporation
CHICAGO ILLINOIS

PETROTEL REFINERY
PLOIESTI, ROMANIA

OVERALL REFINERY
BLOCK FLOW DIAGRAM

DWG. No. 2063-41-07-101 | 0

FIGURE 9

TABLE C.7.1.1 - PROCESS UNITS

No.	Name of the Unit	Capacity Tonnes/Y (Feed)	Licensor	Designer	Remarks
1	Atmospheric Distillation #1	300 000	Unknown	Unknown	Commissioned 1938
2	Atm and Vacuum Distil #1	600 000	USSR	USSR	Commissioned 1954 desalting included.
3	Atm and Vacuum Distil #2	600 000	USSR	USSR	Commissioned 1954 desalting included.
4	Atm and Vacuum Distil #3	3 500 000	ICERP	IPIP	Commissioned 1974 desalting included.
5	Propane Deasphalting	230 000	ICERP	IPIP	Under construction. Built from old unit. To be started 1991.
6	Furfural Extraction #1	200 000	USSR	USSR	Commissioned 1956.
7	Furfural Extraction #2	200 000	USSR	USSR	Commissioned 1957 revamped 1964.
8	MEK Dewaxing #1	150 000	USSR	USSR	Commissioned 1956.
9	MEK Dewaxing #2	150 000	USSR	USSR	Commissioned 1956 revamped 1966.
10	Vacuum Distillation #1	170 000	Unknown	Unknown	Commissioned 1951.
11	Vacuum Distillation #2	200 000	ICERP	IPIP	Commissioned 1967.
12	Deoiling	60 000	USSR	USSR	Commissioned 1958.
13	Paraffin Finishing	20 000	USSR	USSR	Commissioned 1959.
14	Oil Hydrofinishing	180 000	ICERP	IPIP	Commissioned 1972.
15	Gas Fractionation	150 000	ICERP	IPIP	Commissioned 1978.
16	Naphtha Hydrotreating	900 000	ICERP	IPIP	Commissioned 1978.
17	Catalytic Reforming	500 000	UOP	IPIP	Commissioned 1978.
18	Kero & Diesel Hydrotreat.	1 000 000	ICERP	IPIP	Commissioned 1978.
19	Amine Treating & Sulfur Recovery	10 000 Sulfur	ICERP	IPIP	Commissioned 1978
20	Coking	700 000	ICERP	IPIP	Commissioned 1978
21	Fluid Catalytic Cracking	1 000 000	UOP	IPIP	Commissioned 1979
22	Normal Paraffins Separation	10 000	Unknown China	Unknown China	Commissioned 1979.
23	Asphalt Blowing	215 000	USSR	USSR	Commissioned 1956.
24	Additives Manufacturing	17 000	ICERP	IPIP	Commissioned 1967.
25	Visobreaking	360 000	ICERP	IPIP	Transformed from an old thermal cracking unit. Commissioned 1991. Not shown in BFD.
26	Alkylation (HF)	100 000	UOP	IPIP	Commissioned 1983.
27	Greases and Corrosion-Protecting Fluids	6 000	Unknown	Unknown	Commissioned 1942. Not shown in BFD.
28	Metal Working Oils	4 000	Not Specified	Not Specified	Built by the Refinery using old equip. Commissioned 1976.
29	White Oils Manufacturing	3 600	Not Specified	Not Specified	Built by the refinery using old equip. Commissioned 1956.

TABLE C.7.1.2 - MATERIAL BALANCE

A. Feedstocks	Tonnes/Year	
	Design	June 1990 - May 1991
Domestic Low Sulfur Crude	1 500 000	1 102 629
Imported Crude	3 500 000	2 046 593
Crude Total	5 000 000	3 149 222
Other Feedstocks	363 128	171 455
TOTAL IN	5 363 128	3 320 677
PRODUCTS OUT		
Fuel Gas	176 100	103 446
Propylene	23 800	2 624
Propane	29 600	657
C_3-C_3^1 Cut		9 946
i-Butane	9 700	
n-Butane	7 000	
i-C_4-C_4^1 Cut		1 265
n-C_4-C_4^1 Cut	20 300	4 190
LPG		12 918
Naphtha	230 100	173 271
Platformate (Transferred to Petrobrazi)	248 200	119 620
RON 90 Gasoline	852 800	395 940
Alkylate	38 400	
Kerosene	74 000	
Diesel Fuels	1 395 500	841 188
Fuel Oils	1 763 400	1 204 777
Finished Lubc (& for other uses) Oils	103 700	75 169
Greases & Allied Products	7 100	4 646
Asphalts	100 000	62 451
Paraffin	12 400	7 585
Sulfur	1 200	
Coke	47 100	37 197
Other Products	12 327	2 194
Other Products Transferred	139 010	69 062
Coke on Catalyst	64 500	51 176
Losses	132 000	141 354
TOTAL OUT	5 363 128	3 320 677

Table C.7.9.1 shows the product specifications for the refinery. Petrotel is the largest lubricants manufacturer in the country, and supplies practically all of the engine oils, a large amount of industrial oils and intermediate stocks, all additives used for engine oils, and half of the paraffin wax production.

7.2. Utilities, Services, Offsites

Electricity generation and distribution

The Petrotel refinery has a co-generation type power station composed of steam boilers and six electrical generators with back pressure steam driven turbines made in the USSR. Three of the generators are rated at 6 MW at 6 kV and the other three are at 12 MV at 6 kV. The refinery can receive power from the national grid through two transformer stations rated at 110/6 kV. The refinery's electrical power requirements from the national grid are 10% in winter and 80% in summer. The variance is due to high steam consumption in the winter that allows for maximum power production. Distribution of the electrical power is at 6 kV to the separate process plants within the refinery, where stepdown transformers feed the consumers at the suitable voltage, either 0.4 or 0.22 kV.

Steam generation and distribution

Steam generation for the refinery initially consisted of seven 4.0 MPa steam boilers made in the USSR and Romania. During 1975 through 1985, six Romanian boilers were brought on line. Other steam sources within the refinery include the recovery boilers located in the FCC plant, the naphtha hydrotreater, kerosene and gas oil hydrodesulfurization, amine treating, and sulfur recovery.

Condensate collection

Condensate is collected in three stations and returned to the boiler house. Less than 50 percent of the condensate can be reused due to the high level of contamination with oil.

Fuel supply

The national network supplies natural gas, methane, by means of metering station outside of the refinery. Process plants within the refinery provide refinery fuel gases at approximately 9 000 to 10 000 nm^3/h. Liquid fuel is produced by the refinery and is used as a make-up or supply fuel. Liquid fuel specifications are shown in Tables C.7.9.1 through C.7.9.21.

TABLE C.7.2.1 - FUEL GAS COMPOSITION

Composition vol%	Natural Gas (Methane from national network)	Refinery gas* average
Nitrogen	0.60	.37
Carbon dioxide	0.07	.04
CO	-	1.69
Hydrogen	-	58.59
Methane	99.26	10.05
Ethane	0.04	19.41
Propane	0.01	4.59
Propylene	-	2.52
Isobutane	0.02	1.71
Normal butane	-	0.2
Butanes	NA	0.41
C_5+	NA	0.42
TOTAL	100	100

* H_2S content not specified

Fresh water supply

Petrotel uses fresh water that is supplied from three sources - the Paltinu reservoir on the Doftana river, the Teleajen river, and wells within the refinery.

Water treatment and distribution

Potable water is obtained from and treated at the Paltinu reservoir. Water from the wells within the refinery is used as it is received. Water that is used in recirculating systems for the cooling towers is treated. BFW is treated by ion exchange.

Cooling towers

Seven groups of cooling towers supply water for different groups of process units. The alkylation unit has a separate cooling water facility. The cooling towers are both natural and forced draft types. Water is cooled about 7°C, and the outlet temperatures are 20 to 22°C in the winter and 30 to 32°C in the summer.

Crude oil receiving

Petrotel receives all of its crude oil through pipelines. Imported crude from Constanta arrives at a rate of about 20 000 tonnes per day.

Product blending and shipment

Petrotel uses tank blending for products. Shipments are via pipelines with connections to Petrobrazi Refinery and Petrotrans S.A., a petroleum products transporting company. The Petrotrans S.A. pipelines connects the Constanta harbor and other areas of Romania.

The pipelines ship gasoline, diesel fuel, LPG, and C_4 cuts. Automatic loading racks for railroad tank cars are used to load petroleum products, gasolines, diesel fuels, kerosenes, and liquid fuels. Control of the loading facilities is by a weigh scale. At present, the daily shipping capacity is 120 railcars for gasoline with a capacity of 2 600 tonnes per day 150 railcars for diesel fuel, with a capacity of 3 600 tonnes per day; and 270 railcars for fuel oil with a capacity of 6 700 tonnes per day. Lube oils are shipped by railroad tanks and 1, 2, 3, and 5 liters cans are shipped by truck.

Tank farm

Crude oil is stored in 15 floating roof tanks with 280 000 cubic meter total capacity. This is enough for a 15 day run at close to the refinery's maximum throughput. Table C.7.9.2 gives information about storage capacity for feeds, intermediate, and finished products.

Flares, blowdown and dropout systems

Three separate flare systems exist for the refinery, collecting safety valves discharge from the towers and vessels at high, medium, and low pressures. Each header is equipped with a 72 cubic meter condensate collecting vessel, 31 cubic meter hydraulic sealing, and flare stacks that are 1.1 meter in diameter and 60 meters in height. Collected condensate is pumped into intermediate gasoline tanks for reprocessing.

Fire protection

The fire protection system is designed by I.P.I.P. in accordance with regulations similar to US Code N.F.P.A. 15 120 cubic meters of fire fighting water is stored in nine tanks. A 5 000 cubic meter tank with a diesel engine driven pump is also available. Fire fighting water is distributed in a loop type header, at 1.4 MPa. Water monitors and hydrants are installed at maximum interval of 60 meters. Inside the buildings, hydrants are available on each floor.

Foam is provided by a central station and local chemical foam stations. Water sprinkling rings are installed on tank spheres and on main process columns. Loading racks are equipped with local foam generators.

A warning and alarm system, including gases and smoke detectors, telephone, and wireless communications provides for early warning and operations coordination. The refinery's fire fighting squad is equipped with all necessary fire fighting equipment and may be supported by military fire fighting units that are stationed near the refinery.

7.3. Chemicals and Catalysts Use

Tables C.7.3.1 and C.7.3.2 show chemicals and catalysts used by Petrotel.

TABLE C.7.3.1 - CHEMICALS

Name	Use
VIONIT CS-3	Ion Exchanger BFW Treatment
DOWEX SBRP	Ion Exchanger BFW Treatment
DOWEX MWA 1	Ion Exchanger BFW Treatment
DOWEX SBR PMB	Ion Exchanger BFW Treatment
DOWEX HCR S(E)	Ion Exchanger BFW Treatment
Caustic Soda	Ion Exchangers Regeneration
Sulfuric Acid	Ion Exchangers Regeneration
Sulfuric Acid (Fumans)	White Oils Manufacturing
Hydrochloric Acid	Ion Exchangers Regeneration
ICAR - POLIDOROL	Cooling Water Treatment (Corrosion Inhibitor)
ICAR - TRIZIN	Cooling Water Treatment (Corrosion Inhibitor)
ETA - 75	Cooling Water Treatment (Biocide)
EDF	Cooling Water Treatment (Biocide)
Sodium Hypochlorite	Cooling Water Treatment
Iron Sulphate	Water Treatment
Lime	Water Treatment
INCOR 103P	Process Corrosion Inhibitor
ICI	Process Corrosion Inhibitor
ANTICOR C2	Process Antifouling Agent
SEPACOR HT	Process Corrosion Inhibitor
UNICOR LHS	Process Corrosion Inhibitor
E96	Crude Demulsifier
5A-SB Molecular sieve	Process N-Paraffins Separation
Aluminum Chloride	Process Catalyst for Paraflow Manufacturing
Ammonia	Process
Hydrazine	Boiler Water Treatment

TABLE C.7.3.2 - CATALYSTS

Application	Catalyst	Supplier
FCC	EKZK	Katalistics, Holland
Catalytic Reforming	R-50	Leuna-Werke, East Germany
Naphtha Hydrotreating	KONTAKT 8211	Leuna-Werke, East Germany
Kero, diesel hydrotreating	KONTAKT 8208 23-R-15	Leuna-Werke, East Ger. Vega, Romania
Lube hydrotreating	23-R-15	Vega, Romania
Gas desulfurization and sulfur recovery - H_2S conversion to sulfur	Activated alumina	Vega, Romania
Hydrogen generators - CO_2 conversion to methane	NiO	Craiova Chemical Works, Romania
Alkylation	Hydrofluoric acid	Tirnaveni Chemical Works, Romania
Merox	Desulfan	Codlea Chemical Works, Romania

7.4. Previous 12-month operating history

During the last 12 months, the Petrotel refinery operated at about 62 percent of its maximum throughput. This was caused primarily by the lack of hard currency to needed to import crude. The imported crude supply was 58.5 percent of normal capacity.

Lube oil manufacturing was also influenced by delay in commissioning the propane deasphalting unit. This unit was rebuilt after being severely damaged by explosion.

Lube oil production was only 72.5 of normal, despite the fact that the lube manufacturing line was fed at 92 percent which is close to the throughput of the two atmospheric and vacuum distillation units. This was due to poor mechanical condition of the process units (atmospheric and vacuum distillation, furfural extraction, dewaxing) and caused a serious lack of products on the local market.

The overall material balance shows high losses. This is associated with a low accuracy in crude products quantities measurements; important vapor losses, (two thirds of the intermediate naphtha and gasoline components are stored in cone type roof tanks discharging vapor into atmosphere) and with many shutdowns and startup operations that resulted from inconsistencies in the crude supply.

7.4.1. Recent modifications

There have been no significant modifications to the processing units or operations. The alkylation unit was shut down due to shortage of spare parts and corrosion. The normal paraffins separation unit was also shut down due to poor performance of the molecular sieve and will be restarted only after improved technology, that uses a new desorbent instead of steam which destroys the sieve will be in place. The replacement of ammonia compressors in dewaxing units is in progress.

7.4.2. Crude Oil Supply

The current crude supply consists of 65 percent imported and 35 percent domestic crude. The imported crude is delivered through Petrolexport S.A., while the domestic crude is shipped via pipeline from various oil regions of the country. The crude oil received at Petrotel from June 1990 through May 1991 was 1.1 million tonnes of domestic paraffinic crude selected for lube oils manufacturing and 2 million tonnes of imported crude. Maximum capacity is 1.5 million tonnes of domestic crude and 3.5 million tonnes of imported crude.

The domestic crude is a paraffinic crude oil with a 37° to 41° API gravity and a low sulfur content, 0.2 to 0.4 weight percent. The imported crude is an oil blend with a 27.5° API gravity and a sulfur content of 1.9 weight percent. Table C.7.9.3 shows the average crude oil properties.

7.4.3. Operating Experiences

The maintenance of the old, worn units including the furfural, dewaxing, deoiling and additives manufacturing, requires important manpower, spare parts, and has a negative impact on economic performance.

7.4.4. Impact of Crude Oil Changes

The lack of imported crude forced the refinery to frequently shut down and restart the process units. This results in energy and product losses and diminishes catalysts activity. Same additional negative impacts have come from changes in crude quality, which has been occurring too frequently to allow any operating optimization.

7.4.5. Impact of Product Market Changes

For the present, the market has not changed significantly and probably will not change in the near future. However, Petrotel will have to deal with competition of imported lubricants. Competition is closely related to the level of quality and product prices.

7.4.6. Impact of Legislation and Social Changes

Recent changes in legislation will result in new opportunities in the areas of crude and spare parts supply. However, this will force Petrotel to orient more toward foreign trade in order to ensure continued financing, and to cover the costs of additional revamping, especially for the lube manufacturing units.

Expected increases in environmental protection enforcement will have also an impact on operations, claiming improvements in emissions control.

The area personnel and staffing will require special care in order to achieve an equilibrium balance between productivity and unemployment.

7.5. Environmental Considerations

7.5.1. Quality of Local Environment

The Petrotel refinery is located on the east side of the city of Ploiesti and is only 6 kilometers from the center cf the city. The refinery has been at its present location since 1904, but as it grew it became a large source of atmospheric and ground pollution.

7.5.2. Current Emissions Control

Gaseous effluents

The storage tanks for crude oil are of floating roof design. Both floating and cone roof tanks are used for product and intermediate storage. The cone roof tanks vent to the atmosphere. There is no equipment for vapor recovery from the tanks. A gas desulfurization and sulfur recovery plant has operated since 1979/80, but during the last 12 months it produced no sulfur. Flue gases from the refinery and power station are not treated.

Liquid effluents

Storm water from the tank farm, process area, roads, and roofs is collected and treated. Treatment consists of settling basins for the tank farm, roads, and roofs. Process area water is treated as industrial waste water. The lube oil complex area storm water is discharged to the purification station of Corlatesti. Teleajen River receives the water from the rest of the refinery. The waste water purification station processes the all of the water collected by the industrial and sanitary sewage system of the refinery using separators and chemical and biological treatment. Table C.7.5.1 shows waste water quality, after treatment.

TABLE C.7.5.2.1 WASTE WATER QUALITY

Item (mg/l)	Actual
TSS	30.0
COD (mg O_2/l)	100.0
BOD (mg O_2/l)	25.0
TOC (mg O_2/l)	9.0
Sulfur	0.2
Oil	9.0
pH	7.5
Flow rate (l/min)	30 000.0

Solid wastes

Bottom stills from tanks and units are discharged into the garbage pit at Ploiesti. Sludge from the separators of the refinery is transported to a pit outside of the refinery. Tars from acid refining are transported to a tar pit for storage. Na_2S and naphthenic lyes are shipped by railroad tank cars to customers, primarily paper manufacturers.

Sulfur management

A mass balance for sulfur was not determined. The gas desulfurization and sulfur recovery unit is of ICITPR design. The unit has operated since 1979/80 with a 3 000 tonnes/y capacity, but during the last 12 months due to a lack of amines, the refinery fuel gas desulfurization was operated at a low performance level. This resulted in the high sulfur content in the fuel gas, causing atmosphere pollution and a decrease in heaters efficiency by fouling of the air preheaters.

Volatile organic compounds (VOC) management

The refinery uses floating roof tanks for crude storage. There is no vapor recovery for the cone roof tanks which are used primarily for intermediate and product storage.

Heavy metal management

There are no special provisions for heavy metals control. Practically all of these leave the refinery in the finished fuel oils.

7.6. Refinery Specific Potential and Opportunities for Improvement

Improving the processing performances of the refinery would require the modernization of the lube oil processing units. The refinery is discussing the modernization program with I.P.I.P. S.A. as well as foreign companies. The design parameters would focus on the ability to process both Romanian and imported crude oil, the flexibility of the atmospheric and vacuum distillation unit, improvement of the vacuum performance by using structured packing, the use of rotating disks contactors (RDC) in the furfural extraction unit, and dewaxing-deoiling successively done in three stages with one single unit.

Cooperation with the French Institute of Petroleum is intended to lead to the process design of hydrotreating of paraffin and ceresin waxes and manufacturing of white oils by hydrotreating, instead of using sulfuric acid. Additives manufacturing facility will also be modernized to improve process control, products purification, and package type additives blending.

Petrotel has a leading position on the engine lubricants manufacturing and a pretty good supply of domestic paraffinic selected crudes for the coming years. This offers the possibility for favorable joint ventures with foreign investors.

The performance level of the catalytic reforming unit will be raised; and a revamping program, including continuous catalyst regeneration, is under discussion with the licensor (UOP).

The alkylation and n-paraffins separation units also need improvements in technology.

Returning to a normal desulfurization of fuel gases which claims to a radical change in amines supply policy will have a positive impact on the heaters efficiency and diminish air preheaters fouling. Better control of burning is also needed to improve the heaters efficiency. Heat exchange improved efficiency in crude preheating could diminish energy consumption as well as a better thermal insulation of the process equipment, pipes, and tanks.

7.7. Refinery Specific Problems and Trends

In the coming years, Petrotel has to restart the petrochemical units and to readjust the product balance to supply feedstock for those units.

One of the main problems facing the company is the rebuilding of its lube oil and additives manufacturing and blending units. The special position that Petrotel has on the local lubricants market should be a help in finding a partner investor for this operation.

The maintenance of the process units and auxiliary facilities needs an important financial and technical effort, mainly for the acquisition of spare parts or new equipment to replace the old, worn ones.

An expected decrease in domestic paraffinic crude oil supply will force Petrotel to think about new sources of imported crude and even take steps to orient the refinery to synthetic oils (as PAO) manufacturing.

The magnitude of the losses is a real problem for Petrotel. Solutions include vapor recovery from cone roof tanks, gases recovery from flares, reduction of leaks, and improved measurement accuracy. The cost of appropriate technical steps may be fully covered by the value of recovered products.

7.8. Reference to Database

The information contained in the questionnaire has been formatted into a computerized data base, which is the subject of a separate report.

7.9 Supporting Plant Data

TABLES:

C.7.9.1 - PRODUCT SPECIFICATIONS - C_3-C_4 CUTS
C.7.9.2 - PRODUCT SPECIFICATIONS - GASOLINES AND NAPHTHA
C.7.9.3 - PRODUCT SPECIFICATIONS - NORMAL PARAFFINS
C.7.9.4 - PRODUCT SPECIFICATIONS - JET FUELS
C.7.9.5 - PRODUCT SPECIFICATIONS - DIESEL FUELS
C.7.9.6 - PRODUCT SPECIFICATIONS - LIQUID FUELS
C.7.9.7 - PRODUCT SPECIFICATIONS - ASPHALTS
C.7.9.8 - PRODUCT SPECIFICATIONS - COKE
C.7.9.9 - PRODUCT SPECIFICATIONS - GREASES
C.7.9.10 - PRODUCT SPECIFICATIONS - CORROSION PROTECTION FLUIDS

C.7.9.11 - PRODUCT SPECIFICATIONS - METAL WORKING EMULSIFIABLE OILS
C.7.9.12 - PRODUCT SPECIFICATIONS - ADDITIVES FOR LUBRICANTS
C.7.9.13 - PRODUCT SPECIFICATIONS - LUBE OILS
C.7.9.14 - PRODUCT SPECIFICATIONS - LUBE OILS - continued
C.7.9.15 - PRODUCT SPECIFICATIONS - LUBE OILS - continued
C.7.9.16 - PRODUCT SPECIFICATIONS - LUBE OILS - continued
C.7.9.17 - PRODUCT SPECIFICATIONS - LUBE OILS - continued
C.7.9.18 - PRODUCT SPECIFICATIONS - WHITE OILS
C.7.9.19 - PRODUCT SPECIFICATIONS - N-PARAFFIN & CEREUS WAXES
C.7.9.20 - STORAGE CAPACITIES
C.7.9.21 - PROPERTIES OF CRUDES

TABLE C.7.9.1 - PRODUCT SPECIFICATIONS - C_3-C_4 CUTS

Specifications	Propylene I	Propylene II	Propane I	Propane II	C_3-C_3=	i Butane	ic_4-C_4=	n-Butane	nC_4-C_4=	LPG
Composition										
C_1 C_2 C_3 Vol % Max.	1	5	.5	5	3				nil	
Propylene Vol % Min.	92	70			27					
Acetylene % Max.	.003	.2				free				
Propylene % Max.			2	8						
Propane % Min.			92	85						
Propane % Max.	8	28			61	8 incl C_3=	1 incl C_3=	1 incl C_3=	.5 incl C_3=	12 incl C_3=
i Butane % Min.						80			7.5 i-butane +iC_4	
i Butane % Max.					3 iC_4'= incl				7	
n Butane % Min.			2 all C_4	2 all C_4			39 nC_4	92	50 butane	87 all C_4
n Butane % Max.	.2				9 Butenes incl		9			
C_5+ % Max.						.5	.2	1	nil	
CO_2 % Max.	1									
H_2S - mg/Nm^3 Mercaptan Sulfur mg/Nm^3 Max.	.005	100	100	150	300 40	135	100	50	100	500
Water Content % Max.			.05	.05						
Vapor Pressure at 38 °C Bar Max.										7.5

TABLE C.7.9.2 - PRODUCT SPECIFICATIONS - GASOLINES AND NAPHTHA

Specifications	Regular	RON 90 Clear	Premium	Naphtha Pyrolysis	Naphtha Kal Reform
Density at 20°C Max.		.755			
RON Min.	87	90	95		
Distillation °C Max. at Vol %0	70	60	20	130	
50	125	120	125	140	
90	185	180	180	185	
EP	205	205	205		185
Reid Vapor Pressure Min. Kg Summer/Winter	500/600	450/550	500/600	500/	
Sulfur % Max.	.1	.1	.1	.08	.02
TEL Content ng/l Max.	.6	Clear	.6		
P6/A5 Content ppm Max.					.3/003

TABLE C.7.9.3 - PRODUCT SPECIFICATIONS - NORMAL PARAFFINS

Specifications	Light C_9-C_{13}	Heavy C_{14}-C_{16}
Saybolt Color, mm, Min.	25	
Boiling Range °C	180-230	185-310
Volume % Boiling up to 300 °C Min.	90	
Flash Point (Closed Cup) °C Min.	45	
Neutralization Number mg Koh/g Max.	2	
N-Paraffins Content Vol % Min.	96	
Aromatics Content Vol % Min.	1	5
Total Sulfur ppm Max.	15	50
Retractive Index		14 355
Bromine Number, g/100 ml, Max.		.55
Copper Strip Corrosion Test	1b	

TABLE C.7.9.4 - PRODUCT SPECIFICATIONS - JET FUELS

Specifications	Type T2	Type TH
Distillations, °C Max at Vol % IBP	150	
10	175	204
50	225	232
90	270	
EBP		288
Viscosity at 20 °C Cst Min.	1.5	
Cloud Point °C	-60	-53
Flash Point (Closed Cup) °C Min.	30	30
Sulfur Content % Max.	.1	.1
Sulfur as Mercaptan % Max.		.001
Aromatic Hydrocarbons Content % Max.	20	20
Smoke Point, mm, Min.	20	20
Absent Gums mg/100 ml, Max.	6	6
Lower Heat Value Kcal/kj Min.	10 250	10 250

TABLE C.7.9.5 - PRODUCT SPECIFICATIONS - DIESEL FUELS

Specifications	LD	-25	-15	-10	-5	+5	Marine	Marine Heavy
Density at 15 °C Max.								.97
distillation Vol % Min at 300 °C	55	48	48	48	48	48		
Viscosity at 20 °C Cst	2.5÷12	2.5÷12	2.5÷12	2.5÷12	2.5÷12	2.5÷12		
Viscosity at 37.8 °C Cst							12	245
Pour Point °C Max. Winter/Summer	-15	-25	-15	-10	-5	+5	+5/-5	
Flash Point °C Min.	55	65	55	60	60	60	66	66
Sulfur Content % Max.	.5	.5	.5	.5	.5	.5	1.5	3.0
Con Carbon on 10% Residue	.25	.40	.40	.40	.45	.45		
Con. carbon % Max.							.5	
Ash Content % Max.	.015	.015	.015	.015	.015	.015	.020	.100
Water & Sediment	nil	nil	nil	nil	nil	nil	.22	1.00
Copper Strip Corrosion Test	neg	neg	neg	neg	neg	neg	neg	neg
Cetane Number Min.	45	40	45	45	45	45		
Diesel Index							34	
Lower Heat Value Kcal/Kg	9 900	9 900	9 900	9 900	9 900	9 900	9 600	9 200

TABLE C.7.9.6 - PRODUCT SPECIFICATIONS - LIQUID FUELS

Specifications		Light 1	Light 2	P	M	40/42S	50/30S	70/42S	300/50S
Density at 20 °C Max.		.935	.940	.830	.870				
Viscosity Cst Max at	20 °C	33							
	50 °C	21	45			280	350	490	2100
	80 °C					63	70	84	385
	100 °C								140
Flash Point °C Max.		55	60	38	55	90	90	90	100
Pour Point °C Max. Winter/Summer		-8/+5	0/+10			42	30	42	50
Sulfur % Max.		2.0	2.0	.1	.25	3.3	3.3	3.5	4.5
Con Carbon % Max.		5	8	.05	.2	14	14	16	25
Ash Content % Max.		.15	.2	.1	.25	.5	.5	.5	.5
Lower Heat Value Kcal/g Min.		9 650	9 500	10 000	9 800	9 400	9 300	9 200	9 200
Vol % Distilled up to °C Min.	200			18					
	250	10	5						
	300			98	50				
	350				90				

TABLE C.7.9.7 - PRODUCT SPECIFICATIONS - ASPHALTS

Specifications	IP85/100 Industrial	DP80/100 Road	E125 For Lacquer & Sealing	H82/92 Water Sealing	SP95 Protection of Underground Pipe
Softening Point R&B °C	85÷100	40÷49	125÷135	82÷92	95÷110
Penetration at 25 °C Min. $x10^{-1}$	5÷20	80÷120	min. 5	min. 10	15÷30
Ductility, mm, Min. at 0 °C		1			
25 °C		100		20	20
Breaking Point °C Min.		-15		-8	
Heating Stability (165 °C 5 Hours)					
Weight Loss %	-1.0	1.0		1.0	1.0
Penetration Drop %	40	30		30	40
Insolubility in CS_2 % Min.	99	99		99	99
Flash Point (open cup) °C Min.	260	240	260	250	230
Wax Content % Max.		4.0		2.0	2.2
Insolubles in Benzene % Max.			.5		
Ash Content % Max.			.5		
Solubility in Linseed Oil			100%		

TABLE C.7.9.8 - PRODUCT SPECIFICATIONS - COKE

Specifications	
Moisture Content % Max	2
Particle Size over 10 Min % Max.	50
over 5 Min % Max.	20
Ash Content % Max	.5
Sulfur content % Max	.8
Volatile Compounds % Max.	11
Lower Heat value Kcal/kg Min.	8 200

TABLE C.7.9.9 - PRODUCT SPECIFICATIONS - GREASES

Specifications	U85 Ca3	U100 Ca4	U90 Ca1	U90 Ca2	U90 Ca1S	U90 Ca2S	U90 Ca1G
Drop point °C Min.	85	100	90	90	90	90	90
Penetration at 25 °C mm $x10^{-1}$	215÷255	170÷210	310÷350	270÷310	310÷350	270÷310	310÷350
Water Cont % Max	2.0	2.0	2.0	2.0	2.0	2.0	2.0
Free Alkaline as NaOH % Max.	.2	.2	.15	.15	.15	.15	.20
Neutralization Num mg/KOH/g Max.	nil	nil					
Suspended Solids % Max.	.4	.4	nil	nil	nil	nil	.4
Graphite Cont %Min							10
Ash % Max	2.5	2.5	2.5	2.5	2.5	2.5	
Carbon Steel Strip Corrosion Test	pass	pass	pass	pass	pass	pass	pass
Heat Stability 72 hr Min. Temp.	65	70					60
Colloidal Stability 3 g of Oil/100g	8	7					
Sulfur Content % Max.					.35	.35	

TABLE C.7.9.9 - PRODUCT SPECIFICATIONS - GREASES - continued

Specifications (Cont.)	L90 CaG	L95 Ca3/3G	UE88 CaEP GPb Zn Cu	Oil Pipes Thread Grease	E55 Ba Li5	U100 AR	Piston Ring Protection Grease
Drop Point °C Min.	90	95	88	80	55	100	40
Penetration at 25 °C mm $x10^{-1}$ Min.	310÷350	200÷230			125÷175		280÷360
Water Cont % Max	1.0	2.0		2.0		2.0	.20
Free Alkaline as NaHO % Max.	.15	.15			.20	.20	.10
Neutralization Number mg KoH/g Max.							
Suspended Solids % Max.						.5	
Zinc Content %				15±1			
Ash % Max.	1.7	1.3			2.15		
Carbon Steel Strip Corrosion Test	pass	pass	pass	pass	pass	pass	pass
Heat Stability 72 hr Min. Temp.	60	60					
Colloidal Stability g of g of Oil/100g			5				
Graphite Cont %	15±1	10±1		15±1			

TABLE C.7.9.10 - PRODUCT SPECIFICATIONS - CORROSION PROTECTION FLUIDS

Specifications	UP1	UP7	P45	MOPL6	AR12	C2
Appearance	Oily, Dark, Clear	Oily, Reddish Brown, Opalescent	Homogenous Brown, After Heating up to 30°C and Stirring	Homogenous Brown		
Gravity at 150 °C				.840÷.890		
Viscosity Cst Min. at 20 °C						38 max
50 °C			20		12÷20	
100 °C						14÷20
Flash Point °C Min.	140	185	30	33		30
Neutralization Number mg KOH/g Min.	.5	2.0				2.5
Water Content %		15÷40		.1	free	free
Protective Film Thickness	7÷20	15÷40	20÷60	8 min		7
Copper Strip Corrosion Test		neg		1b		neg
Carbon Steel Strip Corrosion Test					pass	
Protective Capacity on Steel 72hrs/60 °C	good	good				good
Protective Capacity on Brass 3hr/100 °C	good	good				good

TABLE C.7.9.11 - PRODUCT SPECIFICATIONS - METAL WORKING EMULSIFIABLE OILS

Specifications	PE1A	PE1B	PE5	PE5EP
Density at 20 °C	.960max	.960max	.930÷.950	.930÷1.01
Viscosity Cst at 50 °C Max.	45	45	35÷45	30÷45
Pour Point °C	-12	-12	-10	-15
Water Content %	5	5	2.5÷3.5	2.5÷3.5
Storage Stability 72hrs at 70 ±2°C			No PHSE Separation Setting up or Sediment	
72hrs at 10 ±20°C				
5% Oil in Water Emulsion Stability 24 hrs at 25 °C	stable	stable	stable	stable
5% Oil in Water Emulsion pH	7.5÷8.5	7.5÷8.5	8.5÷9	8.5÷9
5% Oil in Water Emulsion, Corrosion on Cost Iron %	0	2		0
4 Ball Machine Test				
Max Load Without Welding N				1300
Wear Spot Diameter mm at 200N				.7

TABLE C.7.9.12 - PRODUCT SPECIFICATIONS - ADDITIVES FOR LUBRICANTS

Specifications	
Name	Function
P101	Antioxidant, Anticorrosive, Detersive
P110S	Antioxidant, Antiwear
P2A75	Antioxidant
P130	Antioxidant for High Temperatures
P212	Detergant, Dispersant, Overbasic (TBN150)
P201	Detergant, Dispersant
P301	Detergant, Dispersant
P302	Detergant, Dispersant, Antirust
P312	Detergant, Overbasic (TBN200, Ca Sulphenate)
P313	Detergant, Overbasic (TBN150, Mg Sulphenate)
P402D	V.I. Improver, Polymethylmetacrylate
P501	EP, Antiwear
P530	EP, Antiwear Package, Antioxidant, anticorrosive, antirust
P601	Ash dispersant
P621	Antirust

TABLE C.7.9.13 - PRODUCT SPECIFICATIONS - LUBE OILS

Specifications (Bearings, Lubricants)	Tb32	IC46	H46	Tb5B	H100	L100	L95
Grav at 15 °C Max	.890	.890	.895	895	.910	.910	.910
Visc at 40 °C Cst	26.8÷33.5	41÷50	41.4÷50.6	52.4÷64.5	90÷110	90÷110	91÷102
Visc at 50 °C Cst	48.0			34.0			
Visc at 100 °C cst							
Visc Index Min.	90	90	95	90	90	90	80
Flash Point °C Min.	190	205	205	200	220	220	235
Pour Pt °C Max.	-3	+2	-16	0	-8	-8	-1
Emulsion Breaking Time, Minute	4			8			
Foaming Tendency Air, After 5 Min. at 24 °C					15		
Foaming Tendency Air, After 5 Min at 93.5 °C					15		
Foaming Tendency Air, After 93.5 °C Test 24 °C	0		15		15		
Foam Stability Air							
After 10 Min. 24 °C	0		0	0	0		
After 10 Min. 93.5 °C	0		0	0	0		
After 24 °C After 93.5 °C 24 °C	0		0	0	0		
Oxidation Stability Neutralization no. mg KOH/g Max.	.4			.4			
Ash Cont % Max.	.005			.005		.005	
Aniline Point °C Min.		96	95		95		
Con Carbon %		.08				.4	.01
Copper Strip Corrosion test			1b		1b		

TABLE C.7.9.14 - PRODUCT SPECIFICATIONS - LUBE OILS - continued

Specifications (cont.) (misc)	H41	L46	M30 Type N	L320	AVI 20	M20/ 20W Extra	M30 Extra
Density at 20 °C Max	.895				.897		
Density at 15 °C Max		.905	.005	.915		.900	.905
Visc at 40 °C Cst.		41.4÷5 0.6		288÷35 2			
Visc at 50 °C Cst	41÷49		61÷75				
Visc at 100 °C Cst Max	9.6	5.8			20	5.7÷9.6	9.6÷13
Visc Index	125	80	90	85		98	98
Flash Point °C Min	190	205	230	220	225	205	215
Pour Point °C Max	-25	-17	-12	+4	-18	-25	-20
Foaming Tendency cm^3 at 24 °C	30				30		
93.5 °C	30				30		
C 24°C After 93.5 °C 24 °C	30				30		
Foam Stability cm^3 at 24 °C	0				0		
93.5 °C	0				0	25	25
C 24°C After 93.5 °C 24 °C	0				0	300	300
4 Ball Machine Test, Wear Spot Diam at 200N	.5 Max						
Sulphate Ash %	.5÷75					1.5 max	1.5 max
Copper Strip Corrosion Test	1b						
Steel Strip Wet Corrosion	no rust traces						
Ash Cont % Max		.005	.005	.01	.005		
Con Carbon % Max		.2	.4	1.0	.45		
Visc at 18 °C Cst Max						10 500	
TBN mg KOH/g Min.						1.5	1.5

TABLE C.7.9.15 - PRODUCT SPECIFICATIONS - LUBE OILS - continued

Specifications (cont.) (Engine)	10W/30 Super 1	M20W 40 Super 1	DS-30	DS-40	MC-30	MG-30	T16A
Density at 20 °C max.	.895	.900	.910	.910	.910	.910	.900
Visc Cst at 18°C	2600 max	10 400 max					
50 °C			57÷68	76÷90			
100 °C	9.6÷11	13÷15	10.5	13	9.5-12.5	9.5÷12.5	16÷17.5
Visc Index Min.	115	115	90	90	85	85	
Flash Point °C Min.	180	205	210	215	220	220	200
Pour Point °C Max.	-25	-25	-20	-20	-20	-20	-20
TBN, mg, KOH/g, Min.	2.5	2.5					
Sulphate Ash % Min.	1.5	1.5	1.8	1.8	.5	.5	1.0
Foam Stability cm^3 at 93.5 °C	25	25	25	25	25	25	25
24°C aft 94°C	300	300	300	300	300	300	300
Ash Content % Max.							.005
Con Carbon % Max.							.4

TABLE C.7.9.15 - PRODUCT SPECIFICATIONS - LUBE OILS - continued

Specifications (cont.) (Engine)	M20/20 W Super 2	M20W/40 Super 2	M30 Super 2	M40 Super 2	LDE	M30 Super 3
Density at 20 °C Max.	.900	.910	.905	.910	.920	.910
Visc Cst at 100 °C	5.6÷9.3	14.5÷16.3	9.4÷12.5	12.6÷ 16.3	138÷152 at 50 °C	9.4÷ 12.5
Viscosity Index Min.	90	115	90	90	90	90
Flash Point °C Min.	216	210	220	230	220	210
Pour Point °C Max.	-25	-25	-20	-20	-20	-20
TBN Min.	6.0	6.0	6.0	6.0		9.0
Sulphate Ash % Min.	1.1	1.1	1.1	1.1	.7	1.7
Zn/P/Ca Content % Min.	.1/.1/.18	.1/.1/.18	.1/.1/.18	.1/.1/.1 8		.14/.1 4/.3
Foam Stability at 93.5 °C	25	25	25	25	0	25
24 °C after 93.5 °C	200	300	300	300	0	100

TABLE C.7.9.16 - PRODUCT SPECIFICATIONS - LUBE OILS - continued

Specifications (cont'd) (Marine)	NL30-8	NS40-25	NC50-70	NS40-12	NS50 Special
Density at 20 °C Max.	.905	.925	.925	.915	
Visc Cst at 50 °C	60÷75	90÷100	115÷150	90÷100	
100 °C	11	14	17	14	22
Viscosity Index Min.	90	90	85	90	
Flash Point °C Min.	720	230	225	230	240
Pour Point °C Max.	-20	-15	-15	-15	-20
Sulphate Ash % Min.	1.2	4.0	8.5	2.0	.6
TBN mg KOH/g Min.	8	25	70	12	
Zn/P/Ca, % Min.	.065/.055/.3	.045/.04/.9		.045/.04/.4	
Foaming Tend. cm^3 at °C					30
93.5 °C					30
C 24°C after 93.5°C					30
Foam Stability cm^3 at °C					0
93.5 °C					0
C 24°C after 93.5°C					0

TABLE C.7.9.17 - PRODUCT SPECIFICATIONS - LUBE OILS - continued

Specifications (cont.) (Gear)	T80EP	T90EP
Gravity at 15 °C Max.	.910	.915
Viscosity Cst at 100 °C	10÷11.5	16.5÷18
Viscosity Index Min.	85	85
Flash Point °C Min.	200	220
Pour Point °C Max.	-20	-20
Sulphate Ash % Min.	.4	.4
Zn/P/Ba/Chl Content, % Min.	.14/.14/.14/.14	.14/.14/.14/.14
Copper Strip Corrosion Test	2c	2c
Foaming Tendency, at 24/93.5/24 °C	30/30/30	30/30/30
Foam Stability, at 24/93.5/24 °C	0/0/0	0/0/0
4 Ball Machine Test - Min. Welding Load, N	1 300	1 300

TABLE C.7.9.18 - PRODUCT SPECIFICATIONS - WHITE OILS

Specifications	Cosmol	Medol	Medicinal
Density at 20 °C Max.	.860	.920	.860
Flash Point °C Min.		200	95
Viscosity Cst Min at 20 °C			20
50 °C	14	20	
Stammer Color, mm Min.	270	270	
Mineral Acidity and Alkalinity	nil	nil	nil
Ash % Max.	.01	.01	.005
Cloud Point °C Max.	+12	+10	
Reducing Compounds	free	free	free
White oils shall be free from sulphur, saponifiables compounds, suspended solids, colorless, tasteless, odorless and meet food and drugs laws provisions.			

TABLE C.7.9.19 - PRODUCT SPECIFICATIONS - N-PARAFFIN & CEREUS WAXES

Specifications	56-68 I	56-68 II	58-62 I	58-62 II	Type 20 Cereus	Type 25 Cereus	Type 30 Cereus
Appearance	transp	transp	transp	opaque	lt yellow	yellow	lt yellow
Melting Point °C	56.1 ÷ 58	56.1 ÷ 58	58.1 ÷ 62	58.1 ÷ 62			
Dropping Point °C Min.					75	65	80
Oil Content % Max.	.6	2.5	.6	2.5	5.0	10.0	
Penetration, mm $x10^{-1}$ at 25°C Max.					20	25	30
Ash Content % Max.					.05		.05
Color Stability Days	7	4	7	4			
Color (s.u.w filter) Stammer	1.5		1.5				
Color (ww filter) Stammer		2.5		2.5			
Color ASTM					2.5	2.5	2.5
Mineral Acidity & Alkalinity	nil	nil	nil	nil	nil	nil	nil
Organic Solvent Insolubles	free	free	free	free	free	free	free

TABLE C.7.9.20 - STORAGE CAPACITIES

A. Feedstocks	Roof Type	No. of Tanks	Capacity m^3 (Total)
Crude Oil	F	15	180 000
Feedstocks for Additives	C	22	1 230
Feedstocks for White Oils	C	5	780
Process Solvents (Furfural, MEK, Benzene, Toluene)	C	14	2 800
Process Chemicals (Sulfuric Acid, Caustic, Ethylic Alcohol etc)	C	8	425
Other feedstocks are stored in 11 tanks, fixed roof type, 18200 m^3.			
B. Intermediate Products			
Naptha and Gasoline Components	F	12	26 000
	C	18	54 000
Kerosene	F	7	10 500
	C	12	11 000
Gasoils	F	6	17 000
	C	30	42 000
Fuel Oils	C	7	10 500
Base Lubes	C	39	21 500
Slack Waxes, Extracts	C	15	8 100
Additives	C	4	600
C. Finished Products			
C_3-C_4 Cuts for Petrochemistry	S	16	12 000
LPG	S	3	3 000
Gasolines & Naphtha	F	10	27 000
Kerosene	C	4	3 000
Diesel Fuels	C	5	33 000
Fuel Oils	C	8	32 000
Finished Lubes	C	24	10 100

TABLE C.7.9.21 - PROPERTIES OF CRUDES

	Domestic, Selected Paraffinic for Lube Manufacturing	Imported, Blended (Average Last 12 Months)
API Gravity	37÷41	27.5
Sulfur Content Wt. %	.2÷.4	1.9
Pour Point °C	39	-10
Viscosity Cst at 50 °C	3.45÷5.3	
Con Coke %	2.5	
W-N Characterization Factor	11.45	10.5
C_4 Wt % on Crude		.8
C_5 180 °C Naphtha - Wt% on Crude	23	18
Sulfur %	.02	.08
180-280 (Kero) Cut - Wt% on Crude	18	
Density C 15 °C	.800	
Sulfur %	.2	
280-350 °C (Diesel/Cut) - Wt% on Crude	10	
Density C 15 °C	.840	
Sulfur %	.3	
Pour Point °C	-10	
WN K Factor	11.6	
180-350 °C Cut (Kero + Gasoil) - Wt.%		22
Sulfur %		.5
350-530 °C (VGO) - Wt% on Crude	32	32.2
Density C 15 °C	.900	
Viscosity at 50 °C Cst	60	
Vacuum Bottoms (530+) Wt%	17	27

C. INDIVIDUAL REFINERY DATA

8. RAFO S.A. - ONESTI, ROMANIA

Address:

Rafo S.A.
Cauciucului, No. 2
Onesti/5450, jud. Bacau, Romania

Telephone: 933-24786
Telex: 21514
Telefax: 933-23267

Contact: Ionel Zencenco
Refinery Manager

8.1. Summary Description of Refinery

Rafo is a petroleum processing company. All capital belongs to the Romanian state and could be transferred to the private sector under the provisions of the law of privatization.

Prior to 1991, Rafo was part of the Borzesti Petrochemical Group and delivered aromatics, C_3-C_4 olefins, and other products to the Group. Now, operating as an independent refinery, Rafo continues to pursue the trading relations it developed under the prior organization in addition to developing trading relationships with other refineries and petrochemical companies within Romania.

The Rafo refinery is located near Onesti city, in eastern Romania, about 40 kilometers from the city of Bacau. See Map Figure 1.

The refinery was built in two stages. In 1956, the first plant was commissioned to process local low sulfur crudes. The first process units were built based on USSR design and equipment. Gradually, other units of Romanian design and construction were added. In 1979 a new line was commissioned which improved throughput and complexity. This line was designed to process 3 500 000 tonnes/y of high sulfur imported crude. Table C.8.1.1 shows the process units of the refinery. The refinery Block Flow Diagrams are shown in Figures 10 and 11.

The overall material balance for 1990 is presented in Table C.8.1.2. Table C.8.1.3 shows the product specifications.

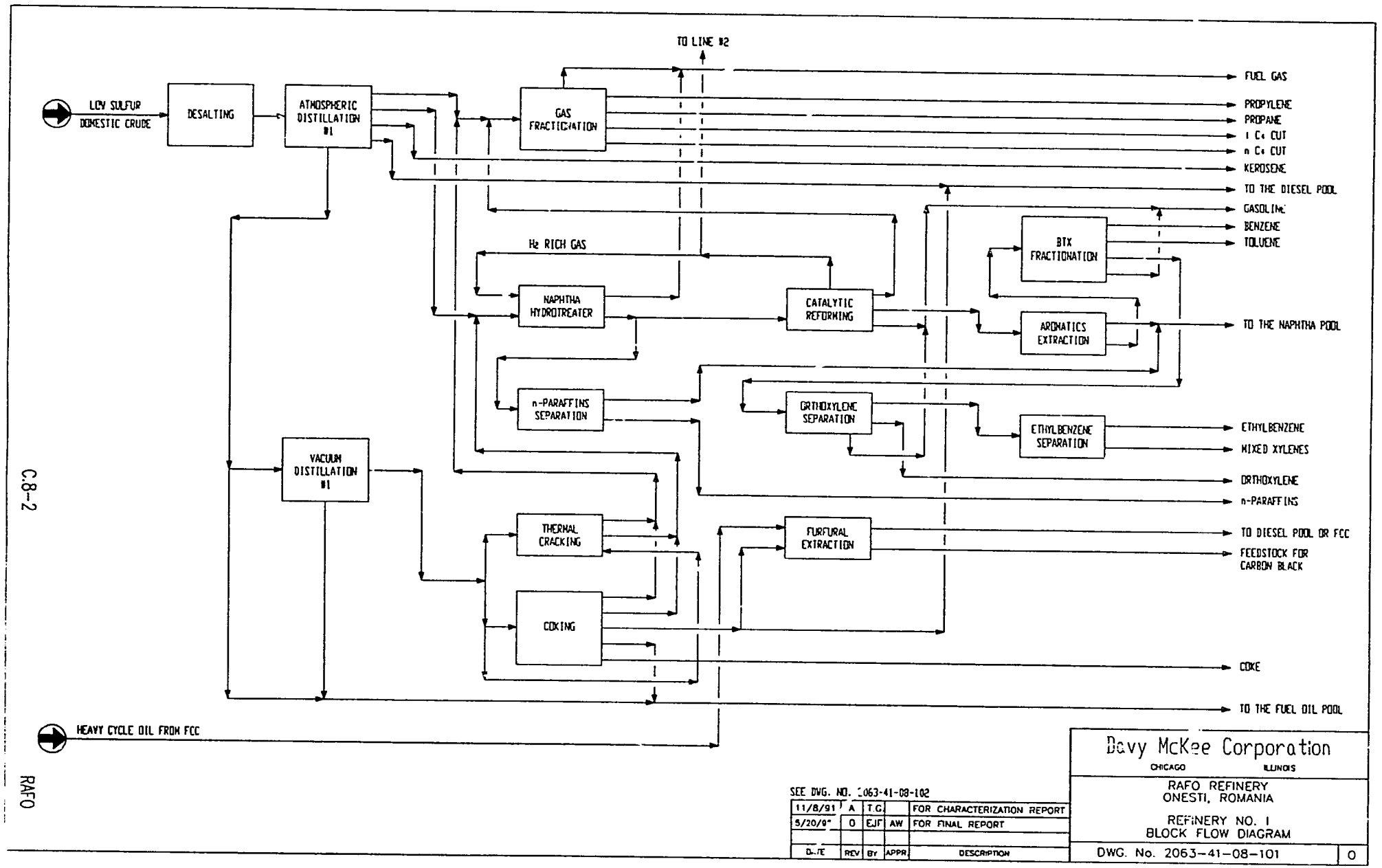

SEE DWG. NO. 2063-41-08-102

DATE	REV	BY	APPR.	DESCRIPTION
11/8/91	A	T.G.		FOR CHARACTERIZATION REPORT
5/20/9"	0	EJF	AW	FOR FINAL REPORT

Davy McKee Corporation
CHICAGO ILLINOIS

RAFO REFINERY
ONESTI, ROMANIA

REFINERY NO. 1
BLOCK FLOW DIAGRAM

DWG. No. 2063-41-08-101 | 0

FIGURE 10

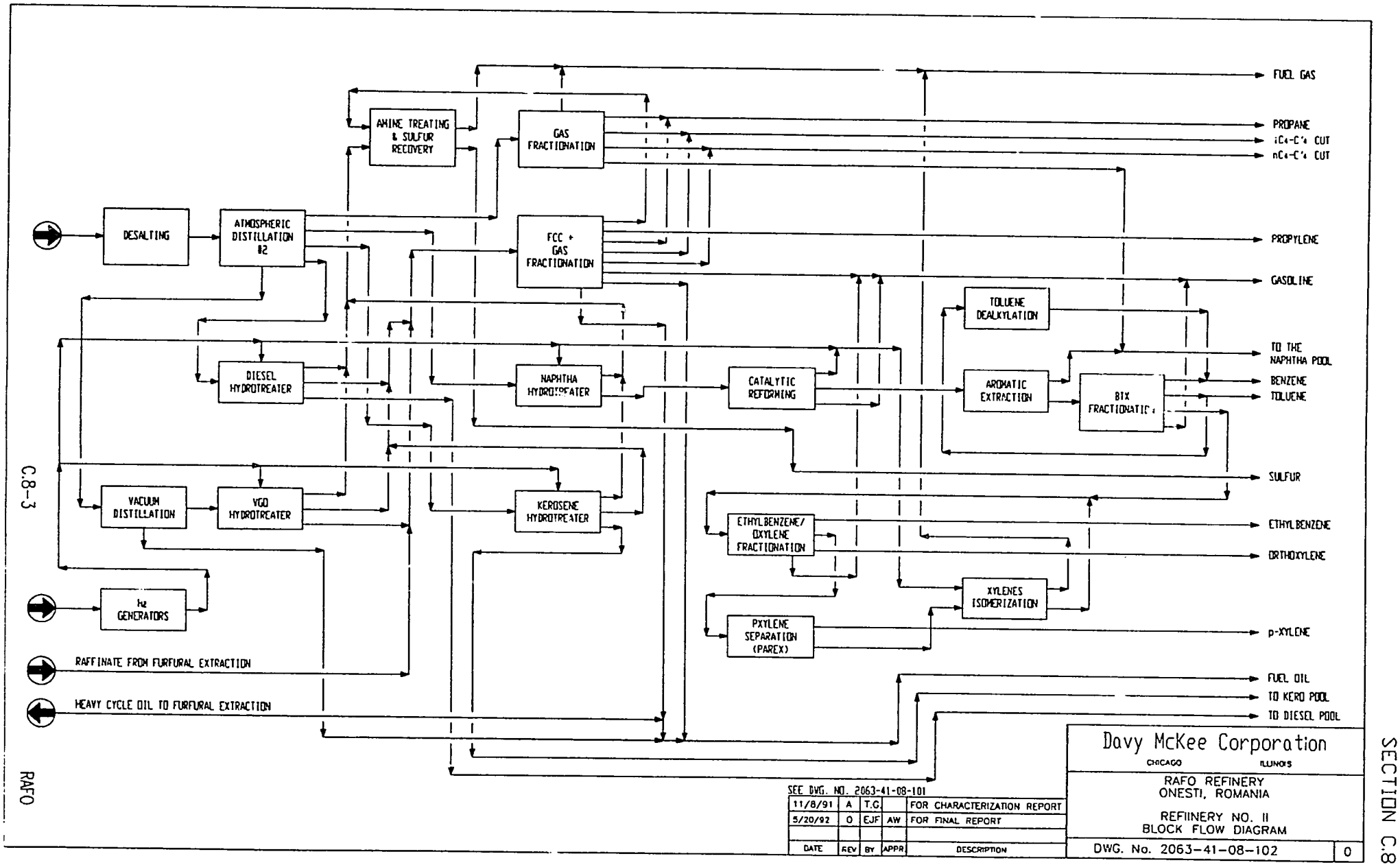
DESALTING
ATMOSPHERIC DISTILLATION #2
AMINE TREATING & SULFUR RECOVERY
GAS FRACTIONATION
FCC + GAS FRACTIONATION
DIESEL HYDROTREATER
NAPHTHA HYDROTREATER
CATALYTIC REFORMING
TOLUENE DEALKYLATION
AROMATIC EXTRACTION
BTX FRACTIONATION
VACUUM DISTILLATION
VGO HYDROTREATER
KEROSENE HYDROTREATER
ETHYLBENZENE/ OXYLENE FRACTIONATION
XYLENES ISOMERIZATION
PXYLENE SEPARATION (PAREX)
H2 GENERATORS
RAFFINATE FROM FURFURAL EXTRACTION
HEAVY CYCLE OIL TO FURFURAL EXTRACTION
FUEL GAS
PROPANE
iC4-C'4 CUT
nC4-C'4 CUT
PROPYLENE
GASOLINE
TO THE NAPHTHA POOL
BENZENE
TOLUENE
SULFUR
ETHYLBENZENE
ORTHOXYLENE
p-XYLENE
FUEL OIL
TO KERO POOL
TO DIESEL POOL
SEE DWG. NO. 2063-41-08-101
11/8/91 A T.G. FOR CHARACTERIZATION REPORT
5/20/92 0 EJF AW FOR FINAL REPORT
DATE REV BY APPR DESCRIPTION
Davy McKee Corporation
CHICAGO ILLINOIS
RAFO REFINERY
ONESTI, ROMANIA
REFIINERY NO. II
BLOCK FLOW DIAGRAM
DWG. No. 2063-41-08-102
0

FIGURE 11

TABLE C.8.1.1 - PROCESS UNITS

No.	Name of the Unit	Capacity tonnes/y (Feed)	Licensor	Designer	Remarks
	A. 1st Line				
1	Electrical Desalting Atmos. Ke and Vacuum Distil. #1	1 750 000	USSR	USSR	Commissioned 1950
2	Thermal Cracking	360 000	Ghiproazneft USSR	Ghiproazneft USSR	Commissioned 1952
3	Furfural Extraction	300 000	ICERP	IPIP	Commissioned 1965
4	Gas Absorption - Fractionation	250 000	USSR	USSR	Shut down. Not shown on Block Diagram.
5	Naphtha Hydrotreater #1	600 000	Hydrocarbon Research	IPIP	Commissioned 1968
6	Catalytic Reforming #1	500 000	HRI	IPIP	Commissioned 1969
7	Aromatics Extraction #1	250 000	HRI	IPIP	Commissioned 1969
8	BTX Fractionation #1	100 000	HRI	IPIP	Commissioned 1969
9	O-Xylene Separation	20 000	HRI	IPIP	Commissioned 1969
10	Gas Fractionation #1	200 000	HRI	IPIP	Commissioned 1969
11	Coking	300 000	ICERP	IPIP	Commissioned 1962
12	Catalytic Cracking	2x64 000	USSR	USSR	Shut down. Not shown on Block Diagram.
	B. 2nd Line				
13	Atmos. & Vacuum Distil #2	3 500 000	ICERP	IPIP	Commissioned 1979
14	Naphtha Hydrotreater #2	780 000	ICERP	IPIP	Commissioned 1980
15	Catalytic Reforming #2	500 000	UOP	IPIP	Commissioned 1980
16	Aromatic Extraction #2	390 000	ICERP	IPIP	Commissioned 1980
17	BTX Fractionation #2	240 000	ICERP	IPIP	Commissioned 1980
18	Kerosene Hydrotreating	340 000	ICERP	IPIP	Commissioned 1984
19	Diesel Hydrotreating	700 000	ICERP	IPIP	Commissioned 1985
20	VGO Hydrotreating	1 230 000	ICERP	IPIP	Commissioned 1985
21	Oxylene and Ethylbenzene Separation (Sebox)	89 000	ICERP	IPIP	Commissioned 1983
22	Paraxylene Separation (Parex)	314 000	UOP	IPIP	Commissioned 1984
23	Gas Fractionation #2	186 000	ICERP	IPIP	Commissioned 1980
24	Hydrogen Generators (#1,2,3)	7525H2	Selas, France	IPIP	Commissioned 1984
25	Catalytic Cracking & Gas Fractionation	1 260 000	UOP	IPIP	Commissioned 1982
26	Amine Treating & Sulfur Recovery	88 000	ICERP	IPIP	Commissioned 1983
27	Toluene Dealkylation	50 000	IITPIC Romania	IITPIC Romania	Commissioned 1987
28	Normal Paraffins Separation	100 000	China	China	Commissioned 1985
29	M-Xylene Isomerization	265 000	UOP	IPIP	Commissioned 1984

TABLE C.8.1.2 - MATERIAL BALANCE

Feedstocks	Design Tonnes/Y	Last 12 Months June 1990-May 1991 Tonnes/Y
Domestic (low sulphur) Crude	1 750 000	519 700
Imported (high sulphur) Crude	3 500 000	2 397 251
Oil Field Natural Gasoline	69 500	27 708
Naphtha (from Darmanesti Refinery)	320 000	143 320
Coking Gasoline (from Darmanesti)	66 000	40 394
Virgin Diesel (from Darmanesti)	100 000	6 960
Coking Heavy Gasoil (from Darmanesti)	120 000	77 677
VGO		48 212
C_3-C_4 Cut (from Darmanesti)	15 000	
Benzene Cut (from coal processing)		19 628
C_3-C_4 Cut (from local petrochemical plant)	20 000	
Gasoline Component (from local rubber plant)	11 400	2 158
Propane (from local rubber plant)		2 940
nC_4 Cut (from local rubber plant)		4 884
MTBE (from local petrochemical plant)		8 526
Lead Tetraethyl		171
Methane (from national network)	7 525	7 670
H_2 Rich Gas (from local petrochemical plant)	2 200	5 211
Paraflow		27
Toluene		3 903
TOTAL IN	5 981 625	3 316 340

TABLE C.8.1.3 - MATERIAL BALANCE - PRODUCTS

Products	Design Tonnes/Y	Last 12 Months June 1990-May 1991 Tonnes/Y
Propane	42 500	9 065
Propane - Propylene Cut	1 000	
C_3-C_5 Cut	5 000	
Propylene	49 150	23 225
i-Butane	14 300	3 035
n-Butane	20 700	173
i-Butane - Butenes Cut	69 500	120 645
n-Butane - 1 Butene Cut	3 000	9 983
n-Butane - 2 Butene (cis) Cut	43 200	1 552
n-Butane - 2 Butene (Trans) Cut		3 551
LPG	87 200	14 312
Benzene	75 350	39 916
Toluene	31 100	11 573
O-Xylene	13 600	4 008
Mixed Xylenes (60% mxylene	12 000	467
P-Xylene	50 250	9 969
Ethylbenzene	9 850	3 572
Naphtha	199 000	73 557
Gasolines	1 340 820	541 523
Kerosene	322 000	
Diesel Fuels	1 291 700	802 818
Fuel Oils	1 648 700	1 184 905
Coke	63 000	23 026
Fuel Gas	254 350	199 902
H_2 Rich Gas (to local petrochemical plant)	13 000	6 750
Sulfur	20 000	2 014
n-Paraffins	10 000	3 226
Aromatic Concentrate Feedstock for Carbon Block	76 100	37 519
Other Products	500	138
Coke on Catalyst	88 000	54 220
Stock Balance		-62 403
Regular Gasoline (87 RON)		120 645
Losses	126 758	157 831
TOTAL OUT	5 981 625	3 316 420

TABLE C.8.2.4 - FUEL GAS COMPOSITION

PROPERTY	SOURCE	
	REFINERY	IMPORTED
Composition:		
H_2S	3.45*	n.a.
H_2O	n.a.	n.a.
CO	n.a.	n.a.
CO_2	1.00	0.87
O_2	n.a.	n.a.
N_2	n.a.	n.a.
H_2	27.60	n.a.
C_1	27.10	98.93
$=C_2$	8.60	0.20
C_2	13.65	n.a.
$=C_3$	4.40	n.a.
C_4	n.a.	n.a.
iC_4	1.60	n.a.
nC_4	3.05	n.a.
C_5	n.a.	n.a.
iC_5	2.00	n.a.
nC_5	n.a.	n.a.
$=C_6+$	n.a.	n.a.
$=1\text{-}3\ C_4$	0.80	n.a.
$=n+iC_4$	0.85	n.a.
$=\text{trans}+\text{cis}\ C_4$	0.80	n.a.
TOTAL	100.00	100.00

* No amine scrubbing

8.2. Utilities, Services, Offsites

Electricity generation and distribution

Two National Electricity Company power stations provide electric power and steam to all the industrial facilities in the area, including Rafo. The electric power enters the refinery through five underground lines (one spare) at 6 kV and two aerial cables at 110 kV, through two 63 MW 110/6 kV stepdown transformers.

Inside the refinery five distribution substations supply power at 6 and 0.4 kV. Overall installed power throughput is 90 MW for a normal consumption of about 55 MW, at a power factor of 0.9. A spare generator, diesel engine driven, may supply power at 0.4 kV in case of an external supply failure. Start-up occurs within four seconds after the main power supply is shut-down.

Steam generation and distribution

Process steam is supplied from the two National Electricity Company power stations. A secondary source is waste heat recovery steam generators within the refinery. There are 19 waste heat boilers within the refinery, including the FCC CO boiler. Steam is provided in three ranges: high at 3.0 MPa; medium at 1.5 MPa; and low at 0.4 MPa. The waste heat recovery boilers produce steam at three levels: high pressure at 86 tonnes/h; medium pressure at 90 tonnes/h; and low pressure at 41 tonnes/h.

Condensate collection

Condensate from the medium and low pressure systems at each process unit is pumped through a coke filter and returned to the power station. Condensate is used also by the waste heat boilers of the refinery.

Fuel supply

Rafo uses only gas fuel which is a mixture of natural gas, methane, imported from the national network and gases generated by process units within the refinery. Table C.8.2.4 shows composition of natural gas and an average composition of the refinery fuel gas, before mixing.

Freshwater supply

Process water is received from the Trotus and Tazlau Rivers at a flow rate of 1 200 cubic meters per hour. Drinking water is from the city of Onesti. The make-up cooling tower water source is filtered water. The CO boiler feed water is demineralized water.

Water treatment and distribution

Raw water is treated by both settling and filtration. Cooling tower water is treated that is [illegible] inhibitors, [illegible] and biocides. Boiler feed water is filtered water

Cooling towers

The cooling water system contains two towers with a natural draught for 10 000 cubic meters per hour each and three towers with a forced draught for 5000 cubic meters per hour each. Some units, including the FCC, Parex, Catalytic Reformer #2, and the hydrogen generators use once through cooling water, which afterwards is fed as make- up water into the recycled water system.

Crude oil receiving

Ninety percent of the crude oil is shipped by pipeline from the port of Constanta and a maximum of 6 000 tonnes per day by railroad tanks.

Product blending and shipment

In-line blending is used to prepare leaded gasoline and cycling blending is used to mix gasoline components with MTBE and with methanol. Air blowing in the tanks is used for mixing diesel fuels and tank blending is used for heavy fuels.

Tank farm

Table C.8.9.2 shows the storage capacities for crude, intermediate and finished products. Crude is stored in eight floating roof and four cone roof tanks, with a total capacity of 247 000 tonnes, ensuring 15 days of running at maximum throughput.

Flares, blowdown and dropout system

Safety valves and gas blowdown discharge into six flare headers, provided with condensate separators and hydraulic seals and five sections of ground flare burners. A gas recovery system provides for recompression of flare gases which are directed to the fuel gas header. Blowdown facilities exist for the heaters and the main process towers.

Fire protection

There are three water pumping stations with a total capacity of 3 600 cubic meters per hour at 1.1 to 1.25 MPa. 33 000 cubic meters of water are permanently available for fire fighting operations. Water monitors and hydrants are located in process and storage areas. The large tanks are provided with foam and water spreading devices.

Warning and alarm equipment provide for quick action and operations coordination. The refinery maintains a fully equipped fire squad that can be readily assisted by military fire units at Onesti from well as neighboring plants within 2 kilometers.

8.3. Chemicals and Catalysts Use

Tables C.8.3.1 and C.8.3.2 show chemicals and catalysts used by Rafo.

TABLE C.8.3.1. - CHEMICALS

Name	Use
Ethylmercaptane	Odorant for LPG
Para-diethylbenzene	Process, desorbent in Parex unit
Ammonia	Process
Caustic soda	Process
Furfural	Process, solvent for heavy aromatic extraction
PEG 200R solvent	Process, solvent for BTX aromatics extraction
Dichlorethane	Process, cat. reforming catalyst activator
Monoethanolamine	Process, H_2S absorption
E-96	Process, demulsifier for crude
Anticor N_2	Process, corrosion inhibitor
Incor 103P	Process, corrosion inhibitor
Aluminum sulphate	Water treatment
Iron sulphate	Water treatment
Polyacrylamide	Water treatment
Vionit CC21	BFW treatment
Vionit A.S.14	BFW treatment
Vionit AT-14	BFW treatment
Calcium chloride	Process, drying agent
Sulfuric acid	Water treatment
Tetraethyl lead	Gasoline improver
MTBE	Octanic component for gasoline
Paraflow	Depressant for diesel fuels
Bleaching clay	Process, BTX extract treatment

TABLE C.8.3.2. - CATALYSTS

Application	Catalyst	Supplier
FCC	EKZ4	Katalistics - Holland
Catalytic Reforming	E-603	Leuna Werke, East Germany
Naphtha, kero, diesel dehydrating	23-R-15	Vega S.A., Romania
H_2S conversions to sulfur	Activated alumina	Vega S.A., Romania
Toluene dealkylation	Chromium on alumina (HDP)	Vega S.A., Romania
N paraffins separation	Molecular sieve	Vega S.A., Romania
H_2S removal, MEROX process	DESULFAN	Craiova Chemical Works - Romania
CO conversion (hydrogen plant)	G56A and G38	Craiova Chemical Works - Romania
Xylenes isomerization	molecular sieve	Vega S.A., Romania
Methane conversion (H_2 generators)	NC2SA	Craiova Chemical Works - Romania

8.4. Previous 12-month Operating History

During the period of January 1990 to January 1991, the refinery experienced a 45 percent drop in crude oil supplies. Most of this decline was in the supply of imported crude oil which dropped from 4.3 million tonnes in 1989 to 2.4 million tonnes in 1990. Petrochemicals feedstock production, including gases, naphtha, and aromatics, dropped to 35 percent of normal, gasoline dropped to 40 percent, diesel fuel dropped to 62 percent, fuel oils dropped to 72 percent and fuel gas dropped to 79 percent.

8.4.1. Recent modifications

During the 1980s Refinery No. 2 was added to the Rafo Refinery complex. This new refinery consists of 17 separate processing units.

8.4.2. Crude Oil Supply

The Rafo refinery uses low sulfur domestic crude and high imported crudes as feedstock. The crude is shipped to the refinery by pipeline; although small amounts of crude are shipped in railway tanks. Table C.8.9.3 shows some of the characteristics of crudes processed by Rafo.

8.4.3. Operating Experiences

As in some of the other Romanian refineries, frequent shutdowns caused by a poor supply of crude and mechanical failures had a negative effect on the energy consumption, catalysts activity, and operating safety at the refinery.

8.4.4. Impact of Crude Oil Changes

No significant changes occurred in crude quality.

8.4.5. Impact of Product Market Changes

The product slate changed, there was less petrochemical feedstock and more fuels produced. This change was a reaction to the crude situation and/or the economy in 1990/1991.

8.4.6. Impact of Legislation and Social Changes

The Rafo Refinery plans to improve its environmental protection policy, in order to meet the expected increase in environmental regulations enforcement. The main social problem is to continue to operate while gradually reducing personnel in an effort to balance both productivity and unemployment protection requirements.

8.5. Environmental Considerations

8.5.1. Quality of Local Environment

Atmosphere and water in the area are intensely polluted by the three large plants in the area - a chemical factory that produces chlorinated compounds, a rubber plant, and Rafo itself.

8.5.2. Current Emissions Control

Gaseous effluents

Floating roof tanks are in use within the refinery. The fixed roof tanks do not use vapor recovery. Equipment for hydrogen sulfide removal is installed, but it is operated at low performance level. There is a Claus sulfur recovery unit within the refinery. A flare system for the refinery also exists. There is no flue gas treatment. The concentration of benzene within the refinery in the vicinity of the unit pumps varied between 16.6 to 25.0 milligrams per cubic meter.

Liquid effluents

Storm water from the tank storage area, process area, roadways, and parking lots is treated by both an API separator and with chemicals. Water is discharged to the Trotus River downstream of the refinery at a rate of about 1 300 cubic meters per hour. There are two waste water treatment streams, R1 and R2, including mechanical, chemical, and biological treatment. Table C.8.5.2.1 shows waste water quality after biological treatment.

TABLE C.8.5.2.1 - WASTE WATER QUALITY

Item (mg/l)	Discharge (Average)
Refinery No. 1	
Phosphorous	0.60
Nitrogen	10.40
Phenol	1.40
Sulfur compounds	10.00
TSS	100.00
COD (Mg O_2/l)	42.00
TOC	241.00
BOD	
pH	7.60
Flow rate (m^3/h)	1 300.00
Refinery No. 2	
TDS	
Phosphor	0.95
Nitrogen	7.52
Phenol	1.96
Sulfur compounds	16.32
TSS	102.60
COD (Mg O_2/l)	208.30
TOC (Mg O_2/l)	50.40
BOD (Mg O_2/l)	241.30
pH	7.75
Flow rate (m^3/h)	850.00

Solid wastes

Solid waste is dumped with wastes from the chemical plant at a site close to the refinery. Sludge is transported to a specific dump outside the refinery. A newly built experimental incinerator will be used in the near future. FCC spent catalyst, approximately 20 kilograms per hour, is lost to the atmosphere. Approximately three tonnes per day are exchanged; the spent catalyst is dumped into a waste pit. Spent caustics are loaded into railcars and sold to the Romanian paper industry.

Sulfur management

During the last 12 months, approximately 50 000 tonnes of sulfur contained in the crude oil entered the refinery. Of this, about 10 000 tonnes were burnt with fuel gases, 2 000 tonnes were recovered as sulfur, 4 000 tonnes remained in the diesel fuels, and 34 000 tonnes remained in fuel oils.

Volatile organic compounds (VOC) management

A flare system used within the refinery includes gas recovery from the flare header. Floating roof tanks are used. There is no vapor recovery system in use for the cone roof tanks, which could explain the very high product losses experienced during the last 12 months.

Heavy metals management

No special process controls heavy metals, which leave the refinery in the fuel oils.

8.6. Refinery Specific Potential and Opportunities for Improvement

Sulfur removal from refinery fuel gas is to be brought to a normal level of performance. Due to the lack of amines, the treating units and fuel gas lines are intensely corroded and practically all the air preheaters are not functioning because of fouling. Some equipment like pumps, compressors, and floating roof tanks need better maintenance and spare parts.

The very high percentage of losses experienced at the refinery point to the need for urgency in taking the necessary steps to collect and recover the vapor from the fixed roof tanks, repair the floating roofs, reduce pump leakage, and increase the accuracy of crude and product quantities metering. These improvements do not require large expenditures and the pay back terms will be very short.

The Rafo refinery should also start to think about new ways to increase feedstocks for the FCC without increasing the quantity of processed crude.

8.7. Refinery Specific Problems and Trends

The main problem at Rafo is the crude supply in terms of both quantity and continuity. The lack of a pipeline for exporting products to the Constanta terminal makes the processing arrangement more difficult.

Some internal steps could be taken to help reduce the impact of the crude supply on key process units. One suggestion is to increase the stocks of crude, FCC feedstocks, and catalytic reforming feed in order to eliminate some of the shut downs. Improvements in vacuum distillation are required to increase the VGO yield supplying more feed to FCC.

The hydrogen balance in the refinery is very tight, which diminishes operating flexibility and keeps VGO desulfurization from its main destination, which is to improve FCC feedstock. Raising the performance of catalytic reforming, which is not very easy, producing better purified hydrogen in the hydrogen plant, and using hydrogen rich gas from the rubber plant could help solve the problem.

Better coordination with the neighboring Darmanesti refinery could offer some good opportunities to improve processing.

8.8. Reference to Database

The information contained in the questionnaire has been formatted into a computerized data base, which is the subject of a separate report.

8.9 Supporting Plant Data

TABLES:

C.8.9.1 - PRODUCT SPECIFICATIONS - C3-CUTS
C.8.9.2 - PRODUCT SPECIFICATIONS - BUTANE AND LPG
C.8.9.3 - PRODUCT SPECIFICATIONS - B-B CUTS, ISOBUTANE, PENTANE
C.8.9.4 - PRODUCT SPECIFICATIONS - AROMATIC HYDROCARBONS
C.8.9.5 - PRODUCT SPECIFICATIONS - NAPHTHA & GASOLINE
C.8.9.6 - PRODUCT SPECIFICATIONS - KEROSENES
C.8.9.7 - PRODUCT SPECIFICATIONS - DIESEL FUELS
C.8.9.8 - PRODUCT SPECIFICATIONS - FUEL OILS
C.8.9.9 - PRODUCT SPECIFICATIONS - COKE
C.8.9.10 - PRODUCT SPECIFICATIONS - N-PARAFFINS
C.8.9.11 - PRODUCT SPECIFICATIONS - SULFUR
C.8.9.12 - PRODUCT SPECIFICATIONS - AROMATIC CONCENTRATE FEEDSTOCK FOR CARBON BLOCK
C.8.9.13 - STORAGE CAPACITIES
C.8.9.14 - PROPERTIES OF CRUDES
C.8.9.15 - PROPERTIES OF CRUDE STOCK FOR FCC
C.8.9.16 - COAL PROCESSING BENZENE CUT

TABLE C.8.9.1 - PRODUCT SPECIFICATIONS - C3-CUTS

Specifications	Propylene I	Propylene IV	C_3-C_3 Cut	Propane I	Fropane II
Propylene Min.	99.5	80.0	27.0		
Propylene Max.				2.0	2.0
Propane Min.				92.0	93.5
Propane Max.		10.0	61.0		
C_1-C_2 Max.		.5	3.0	5.0	2.5
C_4 Max.	.5		9.0	2.0	2.0
Sulfur % Max. (total)	.0005	.01	.03	0.0051	.0051
Sulfur as Mercaptanes % Max.			.0064		
Carbon Monoxide & Dioxide % Max	.002				
Note: Two more types of propylene (99.0 and 92.0%) are available.					

TABLE C.8.9.2 - PRODUCT SPECIFICATIONS - BUTANE AND LPG

Specifications	Butane I	Butane II	Butane III	Butane-Isobutane	LPG
Butane Wt % Min.	94	92	90	5-20	
C_3 Hydrocarbons Wt % Max.	.2	1.0	1.0	1.0	42
Total C_4 Hydrocarbons Wt % Min.					87
C_5+				.2	1
Vapor Pressure, Bar, Max, at 10 °C					2.0
50 °C					7.5
75 °C					11
Sulfur Wt ppm, Max.		50	100	50	
Isobutane + n butanes Wt %				30-50	

TABLE C.8.9.3 - PRODUCT SPECIFICATIONS - B-B CUTS, ISOBUTANE, PENTANE

Specifications	N Butane-Butenes	C Butane-Butenes	Isobutane I	Isobutane II	Pentane
$C_3+C_3^1$ Wt % Max.	.2	1.0	.5	8	
Isobutane Wt % Max.	1.0				
Isobutane Wt % Min.		difference to 100%	497.5 (i C_4^1 incl)	80	
N Butane Wt % Max.	difference to 100%	9.0	1.5	difference to 100%	6 (all C_4)
C_5+ Wt % Max.	.5	.2	.5	.5	
Z Butenes Wt % Min.	58				
N + i C_5 Wt % Min.					90
C_6+ Wt % Max.					4
Total Sulfur ppm Max.	100	100	50	135	

TABLE C.8.9.4 - PRODUCT SPECIFICATIONS - AROMATIC HYDROCARBONS

Specifications	Benzene	Toluene	Ethylbenzene	O-Xylene	P-Xylene
Density at 20 °C	.876-.880	.869-.873	.865-.875	.877-.880	.860-.866
Boiling Range °C	10°C including 80.1°C	1°C including 110.6°C	135.5-136.4	143-144.8	137.7-138.8
Bromine Number g/100g mm	.3	.1			
Crystallization Point °C	+5				
Sulfur Content ppm Max.	10	free	free		free
Non Aromatic Hydrocarbons % Max.		.5	.2		free
Copper Strip Corrosion Test		no trace			
Ethylbenzene % Min.			99.6		
Paraxylene % Min.					99.2
Retractive Index N_D^w				1.500-1.506	
Chlorinated Organic Compounds					free

TABLE C.8.9.5 - PRODUCT SPECIFICATIONS - NAPHTHA & GASOLINE

Specifications	Naphtha	Regular	Premium I	Premium II	Unleaded
RON Min.		87	98	95	90 clear
Distillation, Temp. °C Max. atIBP	35				
10% Vol	130	70	60	70	60
50% Vol	140	125	120	120	120
90% Vol	165	185	180	180	180
EBP	185	205	205	205	205
Reid Vapor Pressure Min. Hg Max. Summer/Winter	500	500/600	450/550	600/600	450/550
Sulfur Content Wt % Max.	.08	.1	.1		.1
TEL Content gPb/l Max.		.6	.4	.6	free
Induction Period, Minutes, Min.		500	400	550	400

TABLE C.8.9.6 - PRODUCT SPECIFICATIONS - KEROSENES

Specifications: Two types - 18% and 0% distilled at 200 °C, flash point 30 -35 °C, 98% distilled at 315 °C.

TABLE C.8.9.7 - PRODUCT SPECIFICATIONS - DIESEL FUELS

Specifications	Roman	-35	-25	-15	-10	-5	+5	Export		
								I	II	III
Gravity at 15 °C Max.								.840	.840	.845
Vol % Distilled Min. up 360 °C	48	48	48	48	48	48	48	50	50	50
350 °C	85	85	85	85	85	85	85	88	90	85
Viscosity, Cst Max. at 20 °C	12	12	12	12	12	12	12	2.0-8.5	2.0-8.5	2.0-8.5
Pour Point °C Max.		-35	-25	-15	-10	-5	+5	-12	-12	-7
Flash Point °C Min.	55	65	65	65	60	60	60	60	60	60
Sulfur Content % Max.	.5	.5	.5	.5	.5	.5	.5	.3	.5	.5
Con. Carbon on 10% Res. % Max.	.35	.40	.40	.40	.45	.45	.45	.25	.25	.25
Ash Wt % Max.	.01	.015	.015	.015	.015	.015	.015	.01	.01	.01
Water & Sediment % Max.	nil	nil	nil	nil	nil	nil	nil	.03	.03	.03
Copper Strip Corrosion on Test	neg	neg	neg	neg	neg	neg	neg			
Diesel Index Min.	48	45	46	48	48	48	48	53	58	53
Color Union Marks Max.	4.0	3.5	3.5	4.5	4.5	4.5	4.5			
Color ASTM Marks Max.								2.0	1.5	2.5

TABLE C.8.9.8 - PRODUCT SPECIFICATIONS - FUEL OILS

Specifications	40/45	50/30	70/25	40/425	50/305	70/425	300/508	70/50	70/505	80/505
Viscosity at 50 °C, °E, Max.	40	50	70	40	50	70	300	70	70	80
Pour Point °C Max.	45	30	25	42	30	42	53	53	53	53
Flash Point °C Min.	90	90	90	90	90	90	100	67	67	67
Sulfur % Max.	1	1	1	3.3	3.3	3.3	4.5	1	4.5	5.0
Con Coke % Max.	14	16	16	16	14	16	25	16	14	20
Ash % Max.	.5	.5	.5	.5	.5	.5	.5	.3	.3	.3
Vanadium Content, ppm, Max.				100	100	100	150	100	150	150
Sodium Content ppm Max.				150	150	150	200	150	200	200
Lower Heat Value, Kcal/kg min.	9500	9400	9200	9400	9300	9200	9200	9500	9300	9200

TABLE C.8.9.9 - PRODUCT SPECIFICATIONS - COKE

Specifications	A	B	C	D	Export		
					I	II	III
Particle Size mm	5-200						
Particles Below 10 mm, % Max.					50	50	50
Ash Content % Max.	.6	.6	.6	1.0	.6	.6	.8
Sulfur Content % Max.	.8	.8	.8	.8	.6	.6	.8
Volatile Compounds % Max.	11.0	11.0	11.8	15.0	11.0	11.0	13.0
Water % Max.	2.0	2.0	2.0	3.0	2.0	2.0	2.0
Lower Heat Value, Kcal/g min.	8200	8200	8200	8200	8200	8200	8200
Solubles in Water % Max.	.4	.6	.6	1.0			
Solubles in Benzene % Max.	2.5	2.5	2.5	2.5			
Silicon + Iron % Max.	.1	.1					
$T_1 + V_n$ % Max.	.01						

TABLE C.8.9.10 - PRODUCT SPECIFICATIONS - N-PARAFFINS

Specifications	
N-Paraffins Content % Min.	97
Aromatic Hydrocarbons % Max	1
Distillation Range °C	185-225
Vol. % Boiling up to 225 °C % Max.	98
Sulfur Content, ppm, Max.	15
N-Paraffin C_9 - Content % Max.	3
N-Paraffins $C1_4$ +, % Max.	.5

TABLE C.8.9.11 - PRODUCT SPECIFICATIONS - SULFUR

Specifications	
Color	Light Yellow
Sulfur Content % Min.	99.8
Melting Point °C	116-119
Moisture Content % Max.	.025
Ash Content % Max.	.001
Organic Compounds Content % Max.	.085
Acidity	free
Arsenic	free
Iron % Max.	.0005
Manganese	free
Copper	free

TABLE C.8.9.12 - PRODUCT SPECIFICATIONS - AROMATIC CONCENTRATE FEEDSTOCK FOR CARBON BLOCK

Specifications	A	B
Density at 20 °C Min.	1.000	.987
Aromatic Hydrocarbons % Min.	70	70
Hydrogen to Carbon Ration Max.	1.22	1.32
Sulfur Content % Max.	.8	.8
Con Carbon % Max.	1.2	1.2
Sodium Content, PPM, Max.	10	15
Potassium Content, PPM, Max.	5	5
Initial Boiling Point, °C, Min,	300	300

TABLE C.8.9.13 - STORAGE CAPACITIES

Feedstocks	Roof Type	No. of Tanks	Capacity M^3 (Total)
A. Crude Oil	F	8	227 500
Crude Oil	C	4	20 000
B. Intermediate Products			
Naphtha and Gasoline	F	18	48 000
	C	19	15 000
Kero (used also for finished products)	F	2	10 000
	C	23	20 000
Diesel	F	4	12 000
	C	27	38 000
VGO (including transferred from other refineries)	C	10	35 000
Fuel Oils	C	15	29 000
Slops	C	8	15 000
Extracts or Carbon Block	C	5	7 500
Cresilic Lyes	C	4	1 550
Aromatics	C	17	26 000
C. Finished Products			
C_3-C_4	S	22	19 200
	C	16	30 000 Horizontal Cylinder
Aromatics	C	42	15 000
N-Paraffins	C	2	1 700
Gasolines + Naphtha	F	11	69 000
	C	10	28 000
Diesel	C	9	48 000
Fuel Oils	F	4	80 000
	C	2	10 000
Aromatic Extract for Carbon Block	C	2	6 000

TABLE C.8.9.14 - PROPERTIES OF CRUDES

	A3 Independent Domestic	A3 Suplacu Domestic	C-Moldova Domestic	Arabian Medina	Arabian Light
Gravity API				36	27
Density at 20 °C	.936	.947	.869		
Sulfur Content %	.42-.40	.44-.48	.50-.64	1.1	3.05
Pour Point °C				-15	-30
Viscosity Cst. at 20 °C					44-65
40 °C				-17	43-93
50 °C	32	41	34		
Con Coke %	5.2	6.5	5.5		7.9
Gasoline:					
Boiling Range on Crude TBP Curve	C_5-230°C	C_5-230 °C	C_5-230°C	C_5-207°C	C_5-221°C
Yield on Crude Wt. %	5.5-6.5	2-6	23-28	19.4	18.9
Sulfur Content %	.05-.1	.07	.002	.045	.13
Gasoil:					
Boiling Range on Crude TBP Curve	230-360	230-360	280-360	207-344	221-354
Yield on Crude Wt. %	14.0	9-15	21-25	20.9	19.4
Gravity °API				24.0	21.2
Density at 20 °C	.870	.872	.847		
Sulfur Content Wt. %	.29	.42	.322	1.1	2.9
VGO:					
Boiling Range on Crude TBP Curve	325-530	310-526	317-527	344-538	354-525
Yield on Crude Wt. %	27	22.2	25.5	30.1	25.0
Gravity °API	23.2	19.8	22.7	24.0	21.2
Density at 20°C	.911	.936	.919		
Sulfur Content %	.4	.21	.47	1.1	2.0
Vacuum Bottoms	532		528	538+	525+
Yield on Crude Wt. %	33.2	54	34.3	26.5	33.4
Sulfur	.71	.3	.75	1.26	5.65

TABLE C.8.9.15 - PROPERTIES OF CRUDE STOCK FOR FCC

	VGO Arpechim	VGO Petrobrazi	VGO Petrotel	Coking Gasoil Darmanesti
Density at 20 °C Max.	.910	.910	.920	.890-.950
Viscosity, Cst at 50 °C, Min.	9	10.5	28 max	10.5-24.5
Flash Point °C Min.	100	150	90	90
Pour Point °C Max.	20	10	30	
Con Carbon % Max.	.3	2.2	.7	.4
Metals Factor		8		

TABLE C.8.9.16 - COAL PROCESSING BENZENE CUT

Density at 20 °C	.860-.895
Boiling Range °C	74-180
Benzene Content %	72-65
Toluene Content %	7-22
Xylenes %	.5-6
Olefins %	4-8
Sulfur Content % Max.	1.8

C. INDIVIDUAL REFINERY DATA

9. STEAUA ROMANA S.A. - CIMPINA, ROMANIA

Address:

Steaua Romana S.A.
15 Calea Doftanei St.
2150 Cimpina City, Romania

Telephone: 973-36151
Telex No: 19618

Contact: Iulian Dobrescu

9.1. Summary Description of Refinery

The Steaua refinery, founded in 1895, is located in the downtown section of Cimpina as shown on Map Figure 1. The refinery has been in continuous operation since it opened in 1895. Figure No. 12 shows the block flow diagram for the refinery.

The refinery consists of the following processing units: atmospheric distillation, two vacuum distillation, asphalt blowing, white products refining and neutralization, oil refining and finishing, demulsifier manufacturing, white oil manufacturing, dewaxing, deoiling, and wax refining.

The refinery processes 400 000 tonnes/y of crude oil, consisting of selected paraffinic and A-3 non-paraffinic crudes. It specializes in the production of wax. The other products include bitumen, base lube oil cuts, white oil, industrial oils, diesel fuel, and naphtha.

The refinery is producing its own electricity and steam.

At the refinery, the crude which is 90 percent paraffinic selected and 10 percent aromatic, is submitted to atmospheric distillation. The produced naphtha is transferred to Petrobrazi refinery as feedstock for catalytic reforming, the kero and diesel cuts are caustically treated and become finished commercial products. Part of the diesel cut from the aromatic crude is used as feedstock for D5 demulsifier manufacturing by sulfonation; the unreacted product returns in the diesel pool.

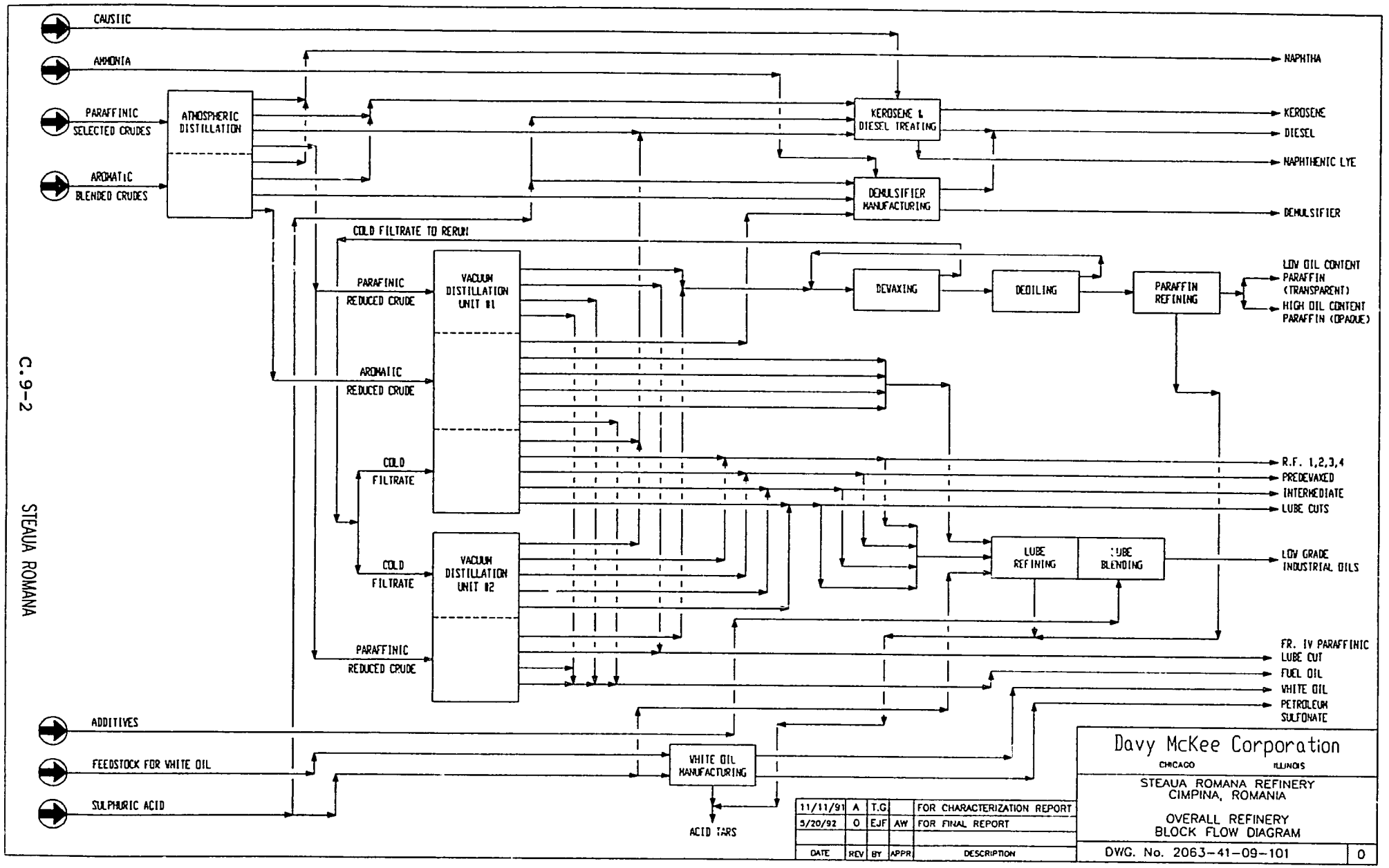
CAUSTIC
AMMONIA
PARAFFINIC SELECTED CRUDES
AROMATIC BLENDED CRUDES
ATMOSPHERIC DISTILLATION
KEROSENE & DIESEL TREATING
DEMULSIFIER MANUFACTURING
NAPHTHA
KEROSENE
DIESEL
NAPHTHENIC LYE
DEMULSIFIER
COLD FILTRATE TO RERUN
PARAFFINIC REDUCED CRUDE
AROMATIC REDUCED CRUDE
COLD FILTRATE
VACUUM DISTILLATION UNIT #1
VACUUM DISTILLATION UNIT #2
DEWAXING
DEOILING
PARAFFIN REFINING
LOW OIL CONTENT PARAFFIN (TRANSPARENT)
HIGH OIL CONTENT PARAFFIN (OPAQUE)
R.F. 1,2,3,4
PREDEWAXED
INTERMEDIATE
LUBE CUTS
LUBE REFINING
LUBE BLENDING
LOW GRADE INDUSTRIAL OILS
FR. IV PARAFFINIC LUBE CUT
FUEL OIL
WHITE OIL
PETROLEUM SULFONATE
ADDITIVES
FEEDSTOCK FOR WHITE OIL
SULPHURIC ACID
WHITE OIL MANUFACTURING
ACID TARS
Davy McKee Corporation
CHICAGO ILLINOIS
STEAUA ROMANA REFINERY
CIMPINA, ROMANIA
OVERALL REFINERY
BLOCK FLOW DIAGRAM
DWG. No. 2063-41-09-101
0
DATE REV BY APPR DESCRIPTION
11/11/91 A T.G. FOR CHARACTERIZATION REPORT
5/20/92 0 EJF AW FOR FINAL REPORT

FIGURE 12

Aromatic reduced crude is distilled under vacuum; four vacuum distilled cuts are refined by sulfuric acid treatment and used as low grade industrial oils blending components. Aromatic vacuum bottoms are fed into the asphalt blowing unit for road paving asphalt production.

Paraffinic selected reduced crude is distilled under vacuum, mainly in vacuum distillation unit 2, yielding a bulk distillate, known in the refinery as "cut I-III", and two more distilled cuts, called IV and V. Cut IV is transferred to the Lubrifin and Petrotel refineries to be processed for lube oils. Cut V is exported as FCC feedstock or is used as a fuel oil component. The bulk distillate is processed for paraffin wax separation by cooling and filtering under pressure. Slack wax is deoiled by gradual heating, "sweating", and deoiled wax is finished by sulfuric acid and bleaching clay treatment. "Sweated" oil is recycled for cooling and filtration. The "cold" filtrate is re-processed by vacuum distillation, primarily in vacuum distillation unit 1, to separate gas oil (about 50 percent) and four distilled, dewaxed lube oil cuts, known as RF1, RF2, RF3, RF4. Some of these are used as blending components for the refinery's own lube product, but most are sold to Lubrifin as feedstock for high grade industrial oils manufacturing.

Paraffinic vacuum residue is used as feedstock for industrial asphalt and as fuel oil component.

The Steaua Romana refinery produces white oil using a naphthenic feedstock which is distilled and furfural refined by the Astra refinery to produce heavy white oil, a lubricant for ethylene compressors in polyethylene manufacturing.

Table C.9.1.1. shows the process units at the refinery and Table C.9.1.2 shows the material balance. Table C.9.9.1 shows products specifications.

TABLE C.9.1.1 - PROCESS UNITS

No.	Name of the Unit	Capacity Tonnes/Y (Feed)	Licensor	Designer	Remarks
1	Atmospheric Distillation	400 000	Not Specified	Not Specified	
2	Vacuum Distillation #1	125 000	Arthur McKee Corp.	Arthur McKee Corp.	Throughput includes 80 000 t/y cold filtrate. Commissioned 1937.
3	Vacuum Distillation #2	165 000		IPIP	Throughput includes 6 000 t/y cold filtrate. Commissioned 1961.
4	Asphalt Blowing	33 000		IPIP	Commissioned 1961 batch process.
5	Kerosene & Diesel Treating	183 000	Unknown	Unknown	Commissioned 1901 batch process.
6	Demulsifier Manufacturing	3 500	Unknown	Unknown	Commissioned 1905 batch process.
7	White Oils Manufacturing	1 500	Unknown	Unknown	Revamped 1990.
8	Lube Oils Refining	28 000	Unknown	Unknown	
9	Lube Oils Blending	10 000	Unknown	Unknown	
10	Dewaxing	113 000	Unknown	Unknown	Throughput includes 10 000 tones recycle from deoiling. Commissioned 1906.
11	Deoiling and Wax Refining	26 000	Unknown	Unknown	Commissioned 1906.

TABLE C.9.1.2 - MATERIAL BALANCE

Inputs	Quantity (tonnes/year)	
	Last 12 months	Reference basis
A3 crude	18 466	44 000
C crude	282 263	356 000
Total crude	300 729	400 000
Furfural refined feedstock for heavy white oil	404	1 500
Naphthenic bright stock	479	1 520
Naphthenic furfural refined oil	710	1 480
V.I. improver P402	3	95
Paraflow	146	195
Fuming sulfuric acid	307	912
Ammonia	173	68
Stock balance	1 008	-
Total input	303 959	405 770

All units are old, and many have been modified or changed technologically so, instead of design data, Steaua Romana chose as a reference basis one year of normal operation, at 400 000 tonnes of processed crude.

TABLE C.9.1.2 - MATERIAL BALANCE (cont.)

Outputs	Quantity (tonne/year)	
	Last 12 months	Reference Basis
Naphtha	41 017	63 600
Kerosene	14 166	-
Gasoil	116 548	171 000
Fuel oil	61 409	51 000
L100 Oil	545	3000
L150 Oil	268	4000
K68 Oil	3 408	8 290
K150 Oil	1 535	3 310
K320 Oil	9	300
Te6 Oil	112	300
Te12 Oil	442	1 600
MF19 Oil	340	600
Heavy White Oil	112	600
Internal Consumption	18	-
Asphalts	21 496	32 500
Opaque Wax	7 853	12 900
Clear (transparent) Wax	1 374	2 000
Naphthenic lye from oil	159	40
Naphthenic lye from gasoil	211	93
Demulsifying agent-D5	984	1 900
Cut IV distilled oil	1 367	4 450

TABLE C.9.1.2 (cont.)

Outputs	Quantity (tonne/year)	
	Last 12 months	Reference Basis
RF 1 dewaxed oil	2 739	5 950
RF 2 FR dewaxed oil	8 381	13 460
RF 3 FR distilled oil	4 637	2 800
RF 4 FR distilled oil	-	1 650
FCC Feedstock	10 000	
Furfural extraction feedstock	1 089	-
Sodium sulfonate	66	300
Losses	13 673	10 130
Total Outputs	303 959	405 770

9.2. Utilities, Services, Offsites

Electricity generation and distribution

Electricity and steam are made by co-generation in the refinery's power station. Two Brown Boveri generators (one standby) are driven by back pressure steam turbines and produce 2.5 MW of electrical power. The output voltage of 3 150 V is increased to 10 500 V by a transformer of 4 420 KVA. Power is distributed via a substation network of three station transformers. Excess electrical power, approximately 20 percent of the power station's output, is fed to the national electrical grid.

Steam generation and distribution

Steam is provided by the thermal power station's three boilers at 26 000 kilograms per hour at 3.0 MPa each. These boilers are fired by methane or fuel oil. High pressure, 3.0 MPa, steam is used for turbo-generator driving. Medium pressure, 1.2 MPa at about 20 tonnes/h goes to steam driven pumps and part is sold to third parties. Low pressure steam goes to tanks heating, BFW preheating, and building heating.

Condensate collection

The existing underground condensate collecting system is non-operational and requires extensive repair. A new, above ground network will be installed, collecting condensate from the units where there is no danger of oil contamination. Condensate from thirds (off limit consumers) to which steam is sold cannot be returned, because of the long distances.

Fuel supply

Methane from the national network is used for processing and steam generation. Fuel oil obtained from the refinery operations is used by the thermo-power station. Due to a shortage of natural gas, especially in the winter, the new heater under construction in the atmospheric distillation unit is designed to burn liquid fuel. Table C.9.2.1 shows the natural gas composition. Liquid fuel is specified in Table C.9.9.3.

TABLE C.9.2.1 - FUEL GAS COMPOSITION

Components	Vol %
Nitrogen	.6
CO_2	.07
Methane	94.26
Ethane	.04
Propane and Higher	.03
TOTAL	100.0

Crude oil receiving

Crude oil is received primarily by railway tanks, 73 percent, and pipe lines, 27, percent. A crude oil rack for unloading railway tankers uses a heating system to heat crude oil before unloading. The crude oil receiving unit has a capacity of approximately 1 000 tonnes per day. Seven fixed roof storage tanks are used to store the crude oil. The crude is settled by heating, and when the water and the impurities are removed, the crude is pumped to the atmospheric distillation unit. Storage capacity for crude oil is 20 000 tonnes, ensuring 15 days of operation at maximum throughput.

Product blending and shipment

Product blending is accomplished within the tanks. Naphtha is shipped via pipeline to the Petrobrazi Refinery. Approximately 35 percent of the gas oil is shipped via pipeline, 40 percent by road tanks, and 25 percent by railroad tanks. Liquid fuel is shipped by railway. Wax and asphalts are primarily shipped hot in railway tank cars and a small amount of asphalt, approximately 10 percent, is packed in cardboard barrels and transported by truck.

Tank farm

Storage tanks for the refinery are cone roof tanks, some of which are equipped with steam heating coils. Table C.9.9.9 shows the tank storage capacity.

Fresh water supply

Water is supplied through pipes from the Paltinu system by means of a refinery pumping station located about 3 kilometers from the refinery. The pumping station is equipped with four electrical pumps; three have a flow rate of 250 cubic meters per hour each and one has a flow rate of 400 cubic meters per hour.

In addition, the pumping station has two diesel driven pumps with a flow rate of 200 cubic meters per hour each. These pumps can be used when the power supply fails.

Water treatment and distribution

Process water received from the Paltinu system is not treated prior to use. Drinking water comes from the Cimpina city network. BFW is treated in the power house. Water is distributed to the refinery through two 20" pipes and one 14" pipe.

Cooling towers

Atmospheric and vacuum distillation units use recycled water. An API separator is used to separate oil leaked from the equipment. Recycled water is treated using the corrosion inhibitor Polidurol.

Flare, blowdown and dropout systems

The refinery is equipped with blowdown facilities on the atmospheric and vacuum distillation units. There is no flare system in place at the refinery.

9.3. Chemicals and Catalysts Use

Table C.9.3.1 shows the chemicals used by the refinery; no catalysts are used.

TABLE C.9.3.1 CHEMICALS

Name	Use
Fuming sulfuric acid	Process, white oil manufacturing
Sulfuric acid	Process, kero refining
Caustic soda	Process kero and diesel treating
Industrial ethylic alcohol	Process, sulfonate extraction
Ammonia	Process, neutralization
Bleaching clay - Sondafin	Process. white oil treating
Industrial salt	Process, brine used as cooling agent
Soda ash	Process, neutralization
Trisodium phosphate	Water treatment
Aluminum sulfate	Water treatment
Lime	Water treatment
Paraflow	Depressant for lube oils
P402	V.I. improver for lube oils
Polidurol	Cooling water treatment
I.C.1, I.C.3	Corrosion inhibitors

9.4. Previous 12-month operating history

During the last twelve months the refinery operated at about 75 percent of its normal capacity. This was due to a feedstock, crude and fuming sulfuric acid, shortage; a fuel shortage; equipment breakdowns; spare parts shortages; and difficulties in shipping finished products. As a result, many short term shut-downs of various units occurred within the refinery. Also, wax production fell to 58 percent of capacity, white oil production fell to about 20 percent, and refined lube oil cuts for feedstock cuts production fell to 66 percent. Losses rose from 2.3 to 4.5 on throughput.

9.4.1. Recent modifications

Work to install a new furnace in the atmospheric distillation unit and a new stripper in the vacuum distillation unit are in progress.

9.4.2. Crude Oil Supply

The Steaua Romana refinery relies on Romanian crude as its feedstock. Approximately 94 percent of the processed crude is paraffinic type C, while the remainder is asphaltic crude type A3. Type C has a special importance for the refinery, as it is the only one suitable for the paraffin separation and deoiling process used. Table C.9.9.10 provides some information on the current crude properties. Certain types of Libyan crude could also be used for wax separation using the Steaua Romana technology.

9.4.3. Operating Experiences

As a result of unexpected interruptions of the production process, many of the units were unable to produce at normal capacity. This situation resulted in a 25 percent drop in production over normal production expectations. Table C.9.4.3.1 shows the scheduled and actual downtime for each of the production units within the refinery.

TABLE C.9.4.3.1 - UNIT DOWN-TIME

Unit	Scheduled Downtime (hours)			Actual Downtime (hours)		
	Total	Minimum	Maximum	Total	Minimum	Maximum
Atmospheric Distillation	1008	72	360	2427	15	533
Vacuum Distillation 2	933	72	360	3096	3	627
Vacuum Distillation 1	1440	48	360	3391	14	613
Asphalt blowing	432	72	360	453	93	360
Paraffin (dewaxing-deoiling refining)	480	72	408	480	-	-
Lube	192	72	120	-	-	2 088*
White Oil Treatment	192	72	120	120	-	-

* During the period from 26 April to 21 July 1990, the Lube Oil Refining Unit was totally shut down as a result of an unscheduled total overhaul of the unit.

9.4.4. Impact of Crude Oil Changes

the Steaua Romana refinery relies on a narrow range of paraffinic crudes suitable for wax separation. The impact of crude oil supply changes is illustrated by the fact that wax production fell to 58 percent as the result of a reduction to 70 percent of the paraffinic crude supply associated with a reduction of paraffin content in the processed crude.

9.4.5. Impact of Product Market Changes

Market demand for all of the products produced by the Steaua refinery is far larger than its possibilities. A further increase in road asphalt demand is expected in connection with a road expansion program planned for the coming years.

9.4.6. Impact of Legislation and Social Changes

Steaua Romana has to reduce soil pollution to meet the new environmental regulations.

From a social point of view, the company, which is one of the largest employers in a small city like Cimpina (30 000 population), needs to keep a very careful balance between productivity requirements and unemployment.

9.5. Environmental Considerations

9.5.1. Quality of Local Environment

The Steaua Romana refinery is located within the city limits of Cîmpina. The refinery has been at its present location since 1895. Over the years both throughput and pollution have increased.

9.5.2. Current Emissions Control

Gaseous effluents

The tanks for crude and products are of cone roof design. There is no flare system for the refinery. Flue gases are not treated. Locally produced sulfur oxides within the refinery are exhausted to the atmosphere.

Liquid effluents

Rain water is discharged into the waste water treatment facility of the refinery. The waste water facility uses an API separator. Chemical treatment for waste water consists of air flotation, pH correction, and the use of lime and aluminum sulfate. Water is discharged into the Doftana River through a lake used for its spare oil skimming capacity. Before entering the lake, the oil content in the waste water is approximately 115 ppm.

TABLE C.9.5.1 - WASTE WATER QUALITY

Item	Actual
pH	Note determined
TSS	28 ppm
BOD	56 ppm
Phenol	0.008 ppm
PO_3	Not determined
TOC	14 ppm
Naphthenic acids	0 ppm

Solid wastes

Residues from cleaning crude tanks, waste bleaching clay, are deposited on the garbage rack of Cîmpina and acid tars from the processing of mineral oils are incinerated outside of the city. In addition, the sludge from the waste water treatment is stored outside of the city.

Sulfur management

Sulfur enters the refinery as a part of the crude, about 1 600 tonnes/y, and as sulfuric acid, about 700 tonnes/y. It leaves in finished products and acid tars.

Volatile organic compounds management

Vapors from the atmospheric distillation unit reflux drum and from the crude and naphtha storage tanks are discharged into the atmosphere. Gases from asphalt blowing are washed with gas oil and water prior to discharge.

Heavy metals management

The refinery has no heavy metals removing facilities.

9.6. Refinery Specific Potential and Opportunities for Improvement

Steaua Romana has an ambitious program of improvement aimed at filling some gaps in the process and auxiliary facilities, and to replace part of the old obsolete equipment and eliminate high polluting activities. The first stage of this program includes:

- building an electrical desalter
- installing a preflash column in the atmospheric distillation unit, to make this unit able to process higher gasoline containing crudes such as the Romanian offshore crude
- installing new control instruments in the process units and an instrument air facility
- replacing the atmospheric distillation unit heater, operating inefficiently; this work is under construction
- installing new burners for the vacuum distillation unit heaters, able to burn liquid fuel
- revamping the vacuum generating system
- completing the revamp of the dewaxing unit, which began in 1991
- building a new 50 tonnes/h steam boiler to replace two of the existing 25 tonnes/h boilers.

For the second step Steaua Romana intends to build a full lube processing line, providing a sure crude supply will be available for the next 10 to 20 years. Of course all the projects need adequate financing.

9.7. Refinery Specific Problems and Trends

Obtaining an adequate crude supply is the main problem of the refinery. Another serious problem is the age of the equipment and the high polluting technology, associated with refinery's location close to residential areas. On the other hand, the paraffin separation process is cheap, probably the cheapest; Steaua Romana has a good energy balance, which can be further improved; it is in a good position on the market; and it is one of the major employers in the city. It is up to company's management to find suitable ways for development, maybe by trying to move to more specialized, more valuable products such as corrosion protection, metal working, or other kinds of special oils instead of low grade industrial oils.

9.8. Reference to Database

The information contained in the questionnaire has been formatted into a computerized data base, which is the subject of a separate report.

9.9. Supporting Plant Data

TABLES:

C.9.1.1	PROCESS UNITS
C.9.1.2	MATERIAL BALANCE
C.9.2.1	FUEL GAS COMPOSITION
C.9.3.1	CHEMICALS
C.9.4.3.1	UNIT DOWN-TIME
C.9.5.1	WASTE WATER QUALITY
C.9.9.1	PRODUCT SPECIFICATION - NAPHTHA
C.9.9.2	PRODUCT SPECIFICATIONS - DIESEL FUELS
C.9.9.3	PRODUCT SPECIFICATIONS - FUEL OIL
C.9.9.4	PRODUCT SPECIFICATIONS - LUBE OIL INDUSTRIAL
C.9.9.5	PRODUCT SPECIFICATIONS - LUBE OILS FOR TEXTILE MACHINERY
C.9.9.6	PRODUCT SPECIFICATIONS - ASPHALTS
C.9.9.7	PRODUCT SPECIFICATIONS - PARAFFIN WAXES
C.9.9.8	PRODUCT SPECIFICATIONS - DEMULSIFYING AGENT D5
C.9.9.9	STORAGE CAPACITY
C.9.9.10	PROPERTIES OF CRUDES

TABLE C.9.9.1 - PRODUCT SPECIFICATION - NAPHTHA

Specifications	
End Boiling Point °C Max.	185
Total Sulfur % Max.	.02
Lead ppm Max.	.3
Arsenic ppm Max.	.003
Iodine Number G_2/100 nil, Max.	2.5
Colour, Saybolt Marks, Min.	23

TABLE C.9.9.2 - PRODUCT SPECIFICATIONS - DIESEL FUELS

B. Diesel Fuels	LDE	-25	-15	-10	-5
Gravity at 15 °C	.815-.865	.815-.865	.815-.865	.815- .865	.815-.865
Distillation Vol% Min up to 300 °C	55	48	48	48	48
350 °C	90	85	85	85	85
Viscosity at 20 °C Cst	2.5-12	2.5-12	2.5-12	2.5-12	2.5-12
Pour Point °C Max.	-15	-25	-15	-10	-5
Flash Point °C Min.	55	65	55	60	60
Sulfur Content % Max.	.5	.5	.5	.5	.5
Con Carbon in 10% Residue % Max.	.25	.40	.40	.50	.50
Ash Content % Max.	.015	.015	.015	.015	.015
Water and Sediment % Max.	.05	.05	.05	.05	.05
Copper Strip Corrosion Test	negative	negative	negative	negative	negative
Cetane Number Min.*	45	40	45	45	45
*Actual Values Higher than 50					

TABLE C.9.9.3 - PRODUCT SPECIFICATIONS - FUEL OIL

Specifications	40/45
Density at 20 °C Max.	.910
Viscosity Cst at 50/80 °C Max.	280/63
Flash Point °C Min.	90
Pour Point °C Max.	45
Sulfur Content % Max.	1
Ash Content % Max.	.5

TABLE C.9.9.4 - PRODUCT SPECIFICATIONS - LUBE OIL INDUSTRIAL

Specifications	L100	L150	K68	K150	K220	K320	MF19
Viscosity Cst. at 40 °C	90-100	135-165	61.2-74.8	135-165	198-242	283-382	16-22
100 °C Min.	9.4	12					
Viscosity Index Min.	80	80	60	60	60	60	
Flash Point °C Min.	230	235	200	225	240	250	170
Pour Point °C Max.	-9	-7	-15	-10	-5	-5	+6
Colour ASTM Marks Max.	5.5	6.0	5.5	6.5	7	8	2
Con. Carbon % Max.	.4	.5	.3	.6	.8	1.0	
Ash % Max.	.005	.006	.01	.01	.01	.01	.01

TABLE C.9.9.5 - PRODUCT SPECIFICATIONS - LUBE OILS FOR TEXTILE MACHINERY

Specifications		Te6	Te12	White*Heavy
Gravity at 15 °C Min.		.910	.910	.90
Viscosity Cst at	20 °C	9-14	30-40	
	40 °C			60-75
	50 °C	3-6	6-12	
Viscosity Index Min.			60	78
Pour Point °C Min.		-15	-12	-18
Flash Point °C Min.				210
Ash % Max.		.005	.005	Free
Con. Carbon % Max.		.1	.1	
Mineral Acidity & Alkalinity		nil	nil	nil
Water Content		nil	nil	nil
Copper Strip Corrosion Test		negative	negative	

*Free from organic impurities, reducing compounds, sulphur compounds color - Stammer marks 250, Hazen marks - 30.

TABLE C.9.9.6 - PRODUCT SPECIFICATIONS - ASPHALTS

Specifications	I.P85/100	D25/40
Softening Pointing R&B °C	85-100	57-67
Penetration mm $x10^{-1}$ at 25 °C	5-20	25-40
Fraas Break Point °C Max.		-10
Ductility at 20 °C cm Min.		25
Flash Point °C Min.	260	260
Wax Content % Max.	6.5	2

TABLE C.9.9.7 - PRODUCT SPECIFICATIONS - PARAFFIN WAXES

Specifications	52/56 Transparent	50/54A Opaque	50/54B Opaque
Melting Point °C	52-54	50-56	50-54
Oil Content % Max.	.7	1.85	2.5
Colour, Stammer Marks with sow glass	1.5		
With ww glass		2.5	2.5

TABLE C.9.9.8 - PRODUCT SPECIFICATIONS - DEMULSIFYING AGENT D5

Specifications	
Neutralization Index mg KOH/g	5-20
Water Content % Max.	50
Solubility in Water %	100

TABLE C.9.9.9 - STORAGE CAPACITY

Service	No. of Tanks	Capacity m^3 Total
Crude	8	20 424
Other Feedstock	9	400
Intermediate		
Kerosene	3	665
Diesel	17	3 047
Fuel Oil	4	66
Feedstock for Dewaxing	7	12 600
Cold Filtrate to Rerun	5	3 300
Lube Base Stocks	6	1 800
Finished Products		
Naphtha	3	10 000
Kerosene	1	6 000
Diesel	11	27 700
Lube Oils	25	5 000
Dewaxed RF1-4 Cuts	5	2 000
Cut #IV	3	400
Paraffin Waxes	12	900
Asphalts	6	400
Fuel Oil	4	5 300

TABLE C.9.9.10 - PROPERTIES OF CRUDES

Specifications	Type C Paraffinic Selected	A3 Oily Crude
Density at 20 °C	.848	.895
Sulfur Content %	.39	.45
Pour Point °C	+15	-23
Viscosity Cst at 40 °C	6.09	5.18
Con Coke %	1.45	1.67
Naphtha:		
Boiling Range °C	65-185	60-185
Yield on Crude Vol %	17.5	16.4
Sulfur Content %	.009	.0014
Octane Number RON Clear	56	65
Kerosene:		
Boiling Range °C	170-280	175-280
Yield on Crude Vol %	20.6	117.1
Sulfur Content	.006	.015
Diesel		
Boiling Range °C	280-380	280-380
Yield on Crude Vol %	13.3	6.7
Sulfur Content %	.08	.15
Pour Point °C	-8	-17
Atm Reduced Crude:		
Yield on Crude Vol %	48.6	59.8
Sulfur Content %	.48	.56
Viscosity Cst at 50 °C	38	454
Viscosity Index of Bulk Lube Stock 380-500 °C		
Dewaxed	62	
Furfural Refined and Dewaxed	97	

C. INDIVIDUAL REFINERY DATA

10. VEGA S.A. - PLOIESTI, ROMANIA

Address:

Vega S.A.
Str. Valeni, No. 146
Ploiesti, 2000, Jud. Prahova, Romania

Telephone: 26959
Telex No.: 19291
Fax No.: 44469

Contact: Constantin Constantin

10.1. Summary Description of Refinery

Vega S.A. is a company that operates in the petroleum processing and catalysts manufacturing industries. All capital belongs to the Romanian State and could be transferred to the private sector under the provisions of the law of privatization.

The Vega refinery was founded in 1904 and was a division of the Concordia Corporation. At that time it had a processing capacity of 200 000 tonnes/y. Today, the Vega refinery capacity is 800 000 tonnes/y.

In addition to the refining operation, Vega includes a catalyst plant that produces 23 types of catalysts for the petroleum processing, chemical, and petrochemical industries. The refinery and the catalyst plant are located at the Northern limits of the city of Ploiesti. See Map Figure 1. Refer to Figure No. 13 for the refinery block flow diagram.

The refinery produces the following: petroleum products including gasoline, white spirit, kerosene, gasoil, fuel oil, asphalt, and lube oils; solvents for polymerization (n-hexane, n-heptane); and solvent gasoline. Table C.10.1.1 is a list of the process units in the refinery.

The overall material balance for 1990 is presented in Table C.10.1.2.

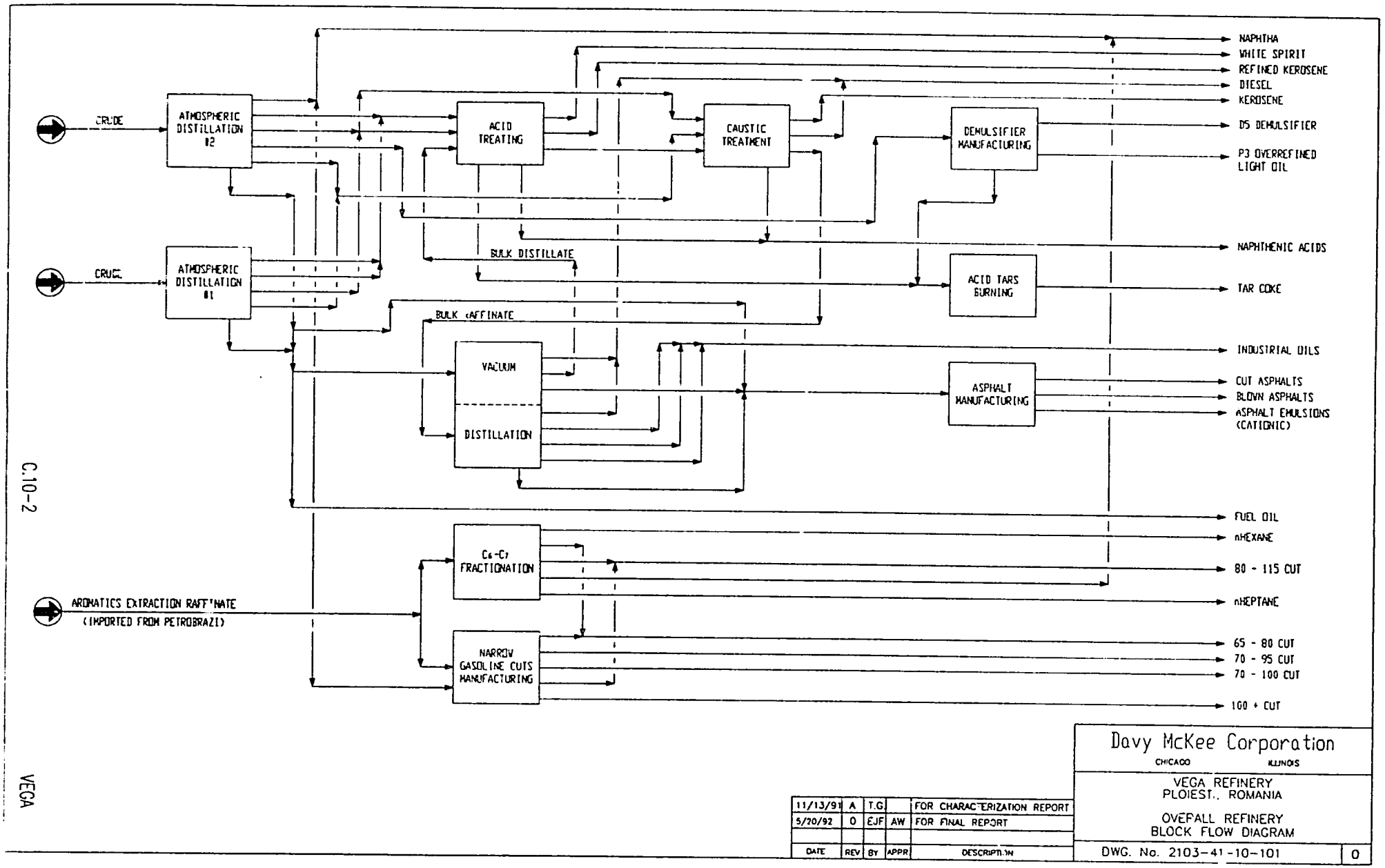

DATE	REV	BY	APPR	DESCRIPTION
11/13/91	A	T.G.		FOR CHARACTERIZATION REPORT
5/20/92	0	EJF	AW	FOR FINAL REPORT

Davy McKee Corporation
CHICAGO ILLINOIS

VEGA REFINERY
PLOIEST., ROMANIA

OVERALL REFINERY
BLOCK FLOW DIAGRAM

DWG. No. 2103-41-10-101 | 0

FIGURE 13

TABLE C.10.1.1 - PROCESS UNITS

No.	Name of the Unit	Capacity Tonnes/Y (Feed)	Licensor	Designer	Remarks
1	Atmospheric Distillation #1	300 000		IPIP	Revamped 1960
2	Atmospheric Distillation #2	500 000		IPIP	Revamped 1971
3	Vacuum Distillation	170 000		IPIP	Revamped 1964
4	Hexane	1 200 (product)	ICERP	IPIP	Commissioned 1982
5	Gasoline Fractionation	40 000 (product)		IPIP	Revamped 1962
6	Asphalt Blowing	65 000 (product)		IPIP	Commissioned 1956 Batchwide
7	Kero and Diesel Treating	250 000 (product)		IPIP	Commissioned 1956 Batchwide
8	Oil Refining	35 000		IPIP	Revamped 1956
9	D5 Demulsifier Manuf.	1 200 (product)		IPIP	Commissioned 1963. Batchwide not shown in BFO.
10	Pharmaceutical Vaseline and Ceresine Wax (Microcrystalline)	400 (product)			Revamped 1956. Not shown in BFD.
11	Naphthenic Acids & Soaps	1 300 (product)		IPIP	Revamped 1982.

TABLE C.10.1.2 - MATERIAL BALANCE, 1990

Inputs	1990 (tonnes/y)	Design (tonnes/y)
Crude oil processed	594 393	800 000
BTX raffinate from Petrobrazi	110 386	120 000
Other feedstocks	1 592	2 988
Total	706 371	922 988

Output	1990 (tonnes/y)	Design (tonnes/y)
Extraction gasolines	24 364	35 000
Naphtha	114 580	171 000
n-hexane	12 587	12 000
N-heptane	103	-
Kerosene	32 835	N/A
White spirit	13 735	18 500
Gas oil	112 226	147 000 (kero mid)
Fuel oils	111 492	112 000
Reduced crude feedstock for Petrotel coking unit	136 188	250 000
Mineral oils	24 968	36 300
Asphalts	60 144	67 000
Natural pharmaceutical vaseline	331	380
Other refinery products	9 843	2 240
Loss	22 975	21 868
Total outputs	706 371	922 988

Crude oil, mainly Romanian low sulfur naphthenic, is distilled in the atmospheric distillation unit. There are two existing units, one of which is on standby due to the lack of crude required to produce naphtha, white spirit, kero, and diesel cuts. Naphtha is transferred to the Petrobrazi refinery for further processing. The white spirit is refined by sulfuric acid treatment and sold. The kero and diesel cuts are neutralized by caustic treatment to be sold as finished products. Some of the naphthenic diesel cut is submitted to fuming sulfuric acid treatment to produce D5 demulsifier, used in crude treatment, and P3 over refined oil, which is used in aluminum foil processing.

Reduced crude is distilled under vacuum and the vacuum gasoil goes into the diesel pool. A bulk vacuum distillate is treated with sulfuric acid, neutralized, and redistilled under vacuum to produce three base lube stocks. The vacuum bottoms, as well as part of the reduced crude from the atmospheric distillation unit are used as the feedstock for an asphalt blowing plant. Vega also produces asphalt emulsions, both cationic and anionic, and cut asphalt.

When paraffinic crudes are processed, the reduced crude goes to asphalt blowing or is transferred to the Petrotel refinery and used as a feedstock for coking.

Vega also produces narrow gasoline cuts, "extraction gasolines," by fractionating the paraffinic virgin naphtha and polymerization solvents, (hexane and heptane), and by fractionating a low aromatic BTX raffinate imported from Petrobrazi refinery.

Soaps and lyes from the caustic treatment and refined oil and/or white products are sold as naphthenic lyes and naphthenic acids. Acid tars are burned to a low grade tar coke. Small quantities of microcrystalline wax and natural salve base are produced by sulfuric acid and bleaching clay treating of ceresine and slack waxes.

10.2. Utilities, Services, Offsites

Electricity generation and distribution

The Vega refinery does not have its own power station and is connected to the national electrical grid through a 110/20 kV electrical transformer station. The main electrical distribution within the refinery is accomplished through four electrical substations equipped with 20/0.4 (.05) kV transformers.

Steam generation and distribution

Steam to operate the refinery and produce the current product slate is supplied by five steam boilers that produce steam at 1.5 MPa at the rate of 150 tonnes per hour. The steam is distributed to the refinery through two high pressure headers at 1.2/1.5 MPa and two low pressure headers.

Condensate is collected in two stations. The condensate from the hexane solvent unit is repumped to the boiler house. The condensate from other process units and the tank farm is oil skimmed, passed through active carbon filters, and repumped to the boiler house.

Fuel supply

The refinery receives natural gas, methane, from the national gas distribution grid. Control and distribution of the natural gas throughout the refinery is the responsibility of the refinery dispatch office. Fuel gas composition is shown in Table C.10.2.1. Additional liquid fuel is provided by the refinery units. Liquid fuel is specified in Table C.10.9.1. The total fuel consumption is approximately 100/120 thousand cubic meters of natural gas and 80/100 tonnes of fuel oil per day.

TABLE C.10.2.1 - FUEL GAS COMPOSITION

Components	Vol %
Nitrogen	5.6
CO_2	.07
Methane	94.26
Ethane	.04
Propane and Higher	.03
TOTAL	100.00

Fresh water supply

Six water wells provide the refinery with water required for its processing and consumption needs. The drinking water which is treated with CaOCl. The steam boilers use water that is treated by softening. There is a once through cooling water and a water recycling system.

Cooling towers

The refinery has two cooling towers that use recycled water in a closed circuit. The towers are natural draft type and are rated for 1 500 cubic meters per hour each of recycled water. The recycled water is treated with sulfuric or hydrochloric acids for pH control, Polidurol, ETA-5 as biocide, and trisine.

Crude oil receiving

Crude oil is pumped to the refinery through 8" pipeline from the Romanian oil fields. Imported oil arrives at the refinery in railroad tank cars from the Constanta oil terminal.

Product Blending and Shipment

The refinery products are blended in tanks by recycling. Naphtha is used as feedstock for catalytic reforming and the reduced crude is used as coking feedstock and is shipped via pipelines. Tank trucks are used to ship road asphalts, D5 demulsifing agent, naphthenic soap and acid, and lube oils.

Tank farm

Table C.10.9.2 shows the crude oil, intermediate and finished products storage capacities. There are 13 fixed roof tanks with a total capacity of 33 300 cubic meters for crude oil. This is enough for two weeks of operation at maximum throughput, intermediate and finished products.

Flares, blowdown, and dropout systems

A semi-automatic blowdown system is provided for atmospheric distillation units AD1 and AD2 and the vacuum distillation unit. The hexane unit is equipped with a flare system for collecting the safety valves discharge. The flare also burns excess gas from the hydrogenation reactor of the unit.

10.3. Chemicals and Catalysts Use

Table C.10.3.1 shows the chemicals used for process and water treatment. The catalyst is used in the hexane solvent unit for aromatics and olefin saturation.

TABLE C.10.3.1 - CHEMICALS

Name	Use
Vitriol oil	Process, kerosene lube refining
Caustic soda	Process, kero, diesel, lube treating
Sulfuric acid fumes	Process, pharmaceutical base refining, D5, P3 manufacturing
Lime	Process, water treatment
Trisodium phosphate	Water treatment
Ammonia	Process, D5 manufacturing
Ethyl alcohol	Process, pharmaceutical
Bleaching clay	Process, P3 manufacturing, pharmaceutical base ceresine treating
Trisin	Water treatment, cooling tower
Sodium hypochlorite	Water treatment, cooling tower
ETA biocide	Water treatment, cooling tower
Hydrochloric acid	Water treatment
Dimethyldioxane	Process, n-hexane

TABLE C.10.3.2 - CATALYST

Application	Catalyst	Supplier
Hexane unit, aromatics hydrogenation	Ni/diatomite	Vega, S.A.

10.4. Previous 12-month operating history

During the past 12 months the refinery operated at a reduced capacity due to a shortage of crude, especially naphthenic as well as electric power, and fuel gas. The atmospheric distillation units, AD1 and AD2, operated at half their normal crude processing capacity - 400 000 tonnes/y against a normal capacity of 800 000 tonnes/y. The refinery closed the AD1 unit during the fourth quarter of 1990. During the period of reporting, the AD2 unit is processing 20 000 tonnes of crude per month.

The decrease in crude processing resulted in reduced production of white products, asphalt, and other finished products. The gasoline fractionation unit operated at 50 percent capacity due to electric power restrictions and lack of orders for various grades of solvent gasoline. At present, the solvent gasoline production has increased substantially, and some grades are being exported.

The n-hexane unit operated at close to its design capacity. The yield of white products from the AD2 unit was greater than indicated by laboratory tests. In the past, the AD1 unit processed only asphaltic crude, while the AD2 unit processed any type of crude. The vacuum distillation unit processes asphaltic long residue to produce industrial oils and special bitumens. However, due to a lack of asphaltic crude, this unit also operated at a reduced capacity.

10.4.1. Recent modifications

No relevant changes occurred in processing.

10.4.2. Crude Oil Supply

Domestic crude oil is pumped to the refinery through 8" pipeline from the oil fields. Imported crude is shipped to the refinery by rail cars from the Constanta Oil Terminal Company. In 1990 the refinery processed 594 393 tonnes of crude. Table C.10.9.3 shows the properties of crudes processed by the refinery; paraffinic low sulfur imported and domestic crudes.

10.4.3. Operating Experiences

Small batch units were not affected by interruptions in crude and fuel gas supply. The atmospheric and vacuum distillation units were shut down frequently.

10.4.4. Impact of Crude Oil Changes

The Vega refinery needs naphthenic crudes to produce lube oils and paving asphalt. Importing crude oils does not make much sense. It would be better to think about coordinating with the Astra refinery on crude processing.

10.4.5. Impact of Product Market Changes

A decrease in market demand for narrow extraction gasoline cuts, hydrocarbon solvents, exerted an impact on Vega's operations. However, exporting has been found to be a good solution. No other products produced by the refinery were affected by market changes.

10.4.6. Impact of Legislation and Social Changes

After the centralized planned economy is eliminated the refinery will have an opportunity to change its product slate, improve efficiency, and reduce pollution.

10.5. Environmental Considerations

10.5.1. Quality of Local Environment

The Vega refinery was established at its present site in Ploiesti, in 1904 and has exerted a constant influence on the environment since then.

10.5.2. Current Emissions Control

Gaseous effluents

The refinery uses fixed roof tanks. There is no vapor recovery equipment on the tanks. A flare system exists for the hexane unit. There are gas scrubbers in the asphalt unit and sulfuric acid treatment for the natural salve base production. There is no equipment for sulfur recovery because Vega only processes low sulfur crudes.

During sampling with the MSA subtester, the nitrogen oxides level was reported to be 0.5 to 50 ppmv; sulfur oxides were reported at 1 to 159 ppmv. No determination was made on hydrocarbon leaks into the atmosphere from the process equipment. The high number of fixed roof tanks used to store crude and light gasoline cuts might be associated with the large losses.

Liquid effluents

Cooling tower purge water is discharged to the Corlatesti water treatment facility and some flows into the Dimbu Creek. Oil contaminated waste water goes to the waste water treatment units within the refinery. After treatment it is pumped to the water treatment unit at Corlatesti. Waste water within the refinery uses API separators. Table C.10.5.2.1 shows the waste water quality. Stream #1 is discharged in the Dimbu Creek and Stream #2 is sent to the Corlatesti facility for treatment. Corlatesti is a village located close to Ploiesti City, where a waste water treatment facility, serving the Petrotel, Astra, and Vega refineries and Ploiesti city is located.

TABLE C.10.5.2 - WASTE WATER QUALITY

	Discharge (mg/l)	
	Stream 1	Stream 2
TSS	29	135
BOD_5	10	270
COD	8	650
pp	2.7	180
a-naphthenic	---	25
a-sulfuric	---	20
Chlorides	205	420
Sulfates	---	170
Ammonia	25	---
Nitrate	150	---
Phenol	5.5	---
pH	7.8	6.5
Flow rate (m^3/day)	2 400	5 922

Solid waste (residues)

All solid waste as API separation sludge, water treatment sludge, storage tanks and process units cleaning bottoms are cleaned manually and dumped in pits located outside of the refinery. Acid tars are burned to a low grade tar coal. The existence from the past of about 100 000 tonnes of acid tars, stored in sumps, pose an environmental problem.

Sulfur management

The Vega refinery processes only low sulfur crudes and burns methane and low sulfur liquid fuel so no fuel gas desulfurization and sulfur recovery are used. Sulfur enters the refinery as sulfuric acid, approximately 1 000 tonnes/y, and leaves as acid tars which are burned.

Volatile organic compounds (VOC) management

There is a flare system in use. Three floating roof tanks are used to store more than 50 volatile products. There is no vapor recovery used for the tanks.

Heavy metals management

A special program for heavy metals recovery is not needed by the Vega refinery.

10.6. Refinery Specific Fotential and Opportunities for Improvement

Reducing the large loses at the refinery will require improvements in two directions:

- reducing vapor emissions by collecting volatile products storage tanks vapors
- replacing the obsolete, high energy consuming, high loss generating technology used to produce lube oils by sulfuric acid refining of a bulk distillate and rerun to base oil cuts. The refinery is considering hydrotreating or hydrocracking but financing is a problem.

The low performance of the water cooling towers needs to be remedied in that electrical power usage can be reduced by bringing the units up to design efficiencies.

A gradual switch from fuel gas to liquid fuel use will need to be accompanied with special care for heater efficiency and excess air control.

A new asphalt blowing unit to increase the production capacity and to meet the Romanian market demand for asphalt emulsions would be highly desirable.

10.7. Refinery Specific Problems and Trends

The Vega refinery is a typical example of what a small refinery can do by specializing in small quantity, valuable products instead of producing finished petroleum products at a low efficiency. This could be a steady trend for the coming years, as artificial limitations imposed by the over centralized planned economy will be eliminated. If the company succeeds in a gradual revamping of its small batch units and keeps the two solvent manufacturing units in good condition it will have a good backup for its efforts to develop new, more efficient and less energy consuming technologies.

Regarding the crude supply policy, improved coordination with the neighboring refineries, such as Astra and Petrotel, is suggested.

10.8. Reference to Database

The information contained in the questionnaire has been formatted into a computerized data base, which is the subject of a separate report.

10.9. Supporting Plant Data

TABLES:

C.10.9.1	PRODUCT SPECIFICATION - NAPHTHA
C.10.9.2	PRODUCT SPECIFICATIONS - EXTRACTION GASOLINES
C.10.9.3	PRODUCT SPECIFICATIONS - N-HEXANE, N-HEPTANE
C.10.9.4	PRODUCT SPECIFICATIONS - WHITE SPIRIT
C.10.9.5	PRODUCT SPECIFICATIONS - KEROSENES
C.10.9.6	PRODUCT SPECIFICATIONS - DIESEL FUELS
C.10.9.7	FEEDSTOCK FOR COKING (TO PETROTEL) AND FUEL OIL (40/45)
C.10.9.8	PRODUCT SPECIFICATIONS - D.5 DEMULSIFIER (FOR CRUDE OIL)
C.10.9.9	PRODUCT SPECIFICATIONS - ASPHALTS
C.10.9.10	PRODUCT SPECIFICATIONS - LUBE OILS
C.10.9.11	STORAGE CAPACITIES
C.10.9.12	PROPERTIES OF CRUDES

TABLE C.10.9.1 - PRODUCT SPECIFICATION - NAPHTHA

Specifications	
Gravity at 15 °C, Max.	.740
Distillation, °C Max at Vol %: IBP	35
10	130
50	140
90	165
EBP	185
Aromatic Hydrocarbons Content, % Max.	18
Olefins Content, % Max.	2
Paraffins + Naphthenes, % Min.	80
Sulfur Content, % Max (Total)	.1
Mercaptanic Sulfur, % Max.	.035
Lead Content, ppm Max.	100
Reid Vapour Pressure, mm Hg Max.	500

TABLE C.10.9.1 - PRODUCT SPECIFICATIONS - EXTRACTION GASOLINES

Specifications							
Type		60/100	65/80	70/95	70/100	80/115	120/150
Distillation	IBP, °C min.	60	65	70	70	80	125
Vol % boiling up to	80 °C min.		98				
	95 °C min.			98			
	100 °C min.	98			98	80	
	115 °C min.					98	
	150 °C min.						98
Neutralization Index, mg KOH/100 cm^3, max.		1	1	1	1	1	1
Mineral Acidity & Alkalinity		nil	nil	nil	nil	nil	nil
Aromatic Hydrocarbons Content, Vol %,Max.			4	4			
Sulfur Content, % Max.		.02	.02				
Note: Type 70/95 shall distill min 75% vol. up to 80 °C and 90% vol up to 90 °C							

TABLE C.10.9.3 - PRODUCT SPECIFICATIONS - N-HEXANE, N-HEPTANE

Specifications	N-Hexane	N-Heptane
Density at 15 °C	.673 ± .01	.698 + .1
Boiling Range 5 ÷ 95 Vol %, °C	66 ÷ 70	93 ÷ 98
Benzene, ppm Max.	100	
Aromatic Hydrocarbons Content, Vol %, Max.		4
Bromine Number, mg Br/100g, Max.	100	100
Water Content, ppm, Max.	200	200
Total Sulfur Content, ppm Max.	1	1
Aqueous Extract Reaction	neutral	
Copper Strip Corrosion Test	1e	

TABLE C.10.9.4 - PRODUCT SPECIFICATIONS - WHITE SPIRIT

Specifications	
Density at 20 °C, Max.	.810
Distillation: IBP, °C Max	165
Vol. % Distilled up to 200 °C, Vol % Min.	98
Flash Point, °C, Min.	33
Relative Volatility to Xylenes, Ratio	2 ÷ 4.5
Water & Suspended Solids	free
Mineral Acidity and Alkalinity	nil
Sulfur Content, % Max.	.025
Aromatic Hydrocarbons Content, % Max.	22
Color, saybolt Marks, Min.	20
Copper Strip Corrosion Test	negative

Table C.10.9.5 - PRODUCT SPECIFICATIONS - KEROSENES

Specifications	Distilled Kero I	Distilled Kero II	Domestic Fuel P
Density at 20 °C, Max.	.840	.835	.830
Flash Point (open cup), °C, Min.	40	30	
Flash Point (close cup), °C, min.			38
Distillation IBP, °C Max.	220		
Vol % Distilled Up to 200 °C, Min.		18	18
Vol % Distilled Up to 270 °C, Min.	50	50	
Vol % Distilled Up to 300 °C, Min.			98
Vol % Distilled Up to 315 °C	98	98	-
Water and Suspended Solids	free	free	free
Color, Saybolt Marks, Max.			18
Viscosity at 20 °C, Cst. Max.			2.5
Mineral Acidity and Alkalinity			nil
Neutralization Index, mg KOH/100 cm_3, Max.			1.4
Ash Content, % Max.			.003
Sulfur Content, % Max.			.1
Smoke Point, mm, Min.			18
Lower Heat Value, Kcal/g, Min.			10 000

Table C.10.9.6 - PRODUCT SPECIFICATIONS - DIESEL FUELS

Specifications	LD	-35	-25	-15	-10	-5	+5
Density at 15 °C, Max.	.850	.850	.850	.850	.850	.850	.850
Distillation, Vol % Min at: 300 °C	55	48	48	48	48	48	48
360 °C	90	85	85	85	85	85	85
Viscosity at 20 °C, Cst	2.5÷12	2.5÷12	2.5÷12	2.5÷12	2.5÷12	2.5÷12	2.5÷12
Pour Point, °C, Max.	-15	-35	-25	-15	-10	-5	+5
Flash Point, °C, Max.	55	65	65	55	60	60	60
Sulfur Content, % Max.	.5	.5	.5	.5	.5	.5	.5
Con Carbon on 10% Residual, % Max.	.25	.40	.40	.40	.40	.45	.45
Ash Content, % Max.	.015	.015	.015	.015	.015	.015	.015
Water and Sediment	nil	nil	nil	nil	nil	nil	nil
Copper Corrosion Test	neg	neg	neg	neg	neg	neg	neg
Cetane Number, Min.	45	40	40	45	45	45	45
Lower Heat Value, Kcal/kg. Min.	10 000	9 800	9 800	9 800	9 800	9 800	9 800

TABLE C.10.9.7 - FEEDSTOCK FOR COKING (TO PETROTEL) AND FUEL OIL (40/45)

Specifications	
Density at 20 °C, Max.	.910
Viscosity, Cst., Max. at 50 °C/80 °C	280/63
Flash Point, °C, Min.	90
Pour Point, °C, Min.	45
Sulfur Content, % Max.	1
Ash Content, % Max.	0.5
Water and Sediment, % Max.	1.5
Con. Carbon, % Max.	14
Lower Heat Value, Kcal/kg, Min.	9 500

Table C.10.9.8 - PRODUCT SPECIFICATIONS - D.5 DEMULSIFIER (FOR CRUDE OIL)

Specifications	
Neutralization Index, mg KOH/g	5÷20
Water Content % Max.	50
Solubility in Water, % Min.	100

TABLE C.10.9.9 - PRODUCT SPECIFICATIONS - ASPHALTS

Specifications	D25/40	D80/120	D120/180	D180/200	Sr95	SrP70	H82/92
Gravity at 15 °C, Min.	1.000	.992	.990	.990			
Penetration, mm x10^{-1}, at 25 °C	25÷40	81÷120	121÷80	181÷200	15÷30	45 max.	10÷20
Softening Point A&B, °C	57÷67	43÷49	39÷45	38÷42	95÷110	70 min	82÷92
Ductility cm, Min. at: 0 °C		1.5	5.0	8.0			
25 °C	25	100	100	100	2.0	3.0	2.0
Fraas Break Point, °C, Max.	-10	-15	-17	-17	-13	[illegible]	-8
Flash Point, °C, Min.	260	250	240	240	230	200	250
Soluble w/Organic Solvents, % Min.	99	99	99	99	99	99	99
Heating Stability at 163 °C, 5 Hours							
Decrease in Penetration, % Max.	25	25	30	30	40	40	30
Weight Loss, % Max.	.8	.4	.9	.9	1.0	1.0	1.0
Adherence (Room Temp, daN/cm^2					6	3	
Wax Content, % Max	2.0	2.0	2.0	2.0	2.2	2.2	2.0
Note: I types - road paving ; Sr-underground pipes protection; H-water sealing.							

Table C.10.9.10 - PRODUCT SPECIFICATIONS - LUBE OILS

Specifications	G20	G40	G55	G95	I68	I100	I150
Gravity at 15 °C, Max.					.940	.950	.952
Flash Point, °C, Min.					190	210	215
Viscosity, Cst. at 40 °C					61.2÷74.8	90÷130	135÷165
50 °C	18÷22	35÷45	55÷60	90÷100			
Viscosity Index, Min.	60	60	60	60			
Pour Point, °C, Max.	-30	-20	-20	-10	-15	-15	-15
Mineral Acidity and Alkalinity	nil	nil	nil	nil	nil	nil	nil
Neutralization number mg KoH/g max					.08	.08	.08
Car. Carbon, % Max.					.1	.45	.6
Copper Strip Corrosion Test	1b	1b	1b	1b			
Steel Blade Corrosion Test	no traces	no traces	no traces				
Mechanical wear test 20 doN 100 min Wear Spot/20 mm, Max.	.4	.4	.4	.4			
Color, ASTM marks, Max.					5.0	6.0	7.0
Ash Content, % Max.					.01	.01	.01
Water & Suspended Solids					free	free	free

TABLE C.10.9.11 - STORAGE CAPACITIES

Service	Roof Type	No. of Tanks	Capacity m^3
A. Feedstock			
Crude	C	13	33 300
BTX Raffinate, Feedstock for C_6-C_7 Solvent	C	3	4 300
B. Intermediate Product			
Naphtha	C	13	1 500
White Spirit	C	4	500
Kero	C	9	1 300
Diesel	C	14	2 300
Fuel Oils	C	7	1 400
Vacuum Bottoms	C	9	3 800
Base Lube Stocks	C	11	6 700
C. Finished Products			
Extraction Gasolines	C	24	5 800
Naphtha	F	1	3 100
	C	12	18 200
White Spirits	C	4	1 300
Kero	C	3	3 700
Diesel	C	9	8 600
Fuel Oil	C	6	9 900
Hexane	C	4	2 000
Lube Oils	C	27	5 800
D5 Demulsifier	C	3	160
Microcrystal Wax & Allied	C	6	55
Naphthenic Acid and Soaps	C	2	140

TABLE C.10.9.12 - PROPERTIES OF CRUDES

Specifications	AMNA Libya	EsSider Libya	Sarir Libya	C Romania	B Romania	A_1 Romania	A_3 Vest Romania	A_3 Blend Romania
Gravity, API	36.27	34.25	31.99	36.51	23.69	21.8	28.15	23.13
Sulfur Wt. %	.38	.47	.19	.2	na	.3	.22	.29
Pour Point °C	20	15	25	9	-20	na	na	na
Visc. Cst, at 20 °C	56.8	9.0		15.1	55.9	104.0	24.5	45.4
40 °C	7.5	5.8	26.9	5.3	15.13			
50 °C						25.3	8.9	13.5
Conradson Carb. %	4.44	2.62	5.6	2.6	na	6.8	4.5	3.79
Metals, ppm Ni	na	.72	1.5	5.7	na	na	na	na
Vn	na	2.45	1.0	8.3	na	na	na	na
C_1-C_6/up to °C on TBP Curve Wt % on Crude	1.4/28	.7/27	1.29/28	.325/46	na	na	na	na
Gas: Boiling Range on Crude TBP Curve:	28-175	27-175	28-175	65-185	na	74-175	42-175	86-175
Yield on Crude, Wt%	17.6	21.4	17.3	19.5	na	11.2	15.5	11.2
Sulfur Cont. Wt%	.025	.051	.004	.021	na	na	na	na
Kero: Boiling Range on Crude TBP Curve	175-230	175-230	175-230	185-240	na	175-230	175-230	175-230
Yield on Crude, Wt%	7.8	9.5	7.7	10.8	18.8	7.5	10.0	8.3
Gravity API	47.7	44.1	47.3	45.4	33.0	37.17	39.8	38.5
Sulfur Cont. Wt%	.082	.1	.08	.046	na	na	na	na
Light Diesel: Boiling Range on Crude TBP Curve	230-340	230-340	230-340	240-320	na			
Yield on Crude Wt%	18.2	16.5	21.5	19.1	12.7	20.5	19.5	20.2
Gravity API	40.37	37.68	40.58	39.7	26.62	26.85	31.48	25.4
Sulfur Cont. Wt%	.23	.32	.08	na	na	na	na	na
Pour Point °C	-9	-15	-3	-18	-18	na	na	na
W.N. Chara. K Factor	12.0	11.8	12.1	12.0	11.3	11.2	11.5	11.2

Table C.10.9.12 - PROPERTIES OF CRUDES (cont.)

Specifications	AMNA Libya	EsSider Libya	Sarir Libya	C Romania	B Romania	A_1 Romania	A_3 Vest Romania	A_3 Blend Romania
Hvy Diesel: Boiling Range on Crude TBP Curve °C	340-360	340-360	340-360	320-360	320-360	340-360	340-360	340-360
Yield on Crude Wt%	3.4	3.8	5.9	7.9	na	4.5	3.5	3.3
Gravity API	36.7	34.13	32.9	35.77	na	23.26	28.1	19.63
Sulfur Cont. Wt%	na	na	na	na	na	na	na	na
Pour Point °C	na	na	na	9.0	na	na	na	na
W.N. K Factor	12.2	11.9	12.0	12.1	na	11.2	11.7	11.1
VGO: Boiling Range on Crude TBP Curve	360-523	360-550	360-525	360-525	na	360-500	360-500	360-525
Yield on Crude Wt%	23.4	28.8	252.2	26.9	46.2	26.3	25.5	30.0
Gravity API	28.8	27 4	30.23	26.3	19.8	17.8	21.3	15.0
Sulfur Cont. Wt%	.42	.45	.23	.28	na	na	na	na
Visc Cst at 98.9 °C	5.8	4.81	5.5	4.7	na	11.8	8.8	13.8
W.N. K Factor	12.3	12.2	12.5	12.3	na	11.3	11.7	11.2
Vacuum Bottoms	513+	550+	525+	525+	na	500+	500+	525+
Yield on Crude Wt%	28.2	19.3	25.0	15.8	17.1	30.0	26.1	27.0
Gravity API	16.7	13.45	12.9	13.8	13.6	10.9	11.8	9.8
Sulfur Cont. Wt%	.85	.98	1.20	.65	na	na	na	na
Visc Cst. at 98.9 °C	965	303	925	na	na	413.7	247.6	1247
Visc Index of Furfural Refined Dewaxed, Bulk Lube Oil Cut	98	99	98	98	47	na	na	na

C. INDIVIDUAL REFINERY DATA

11. CRISANA - SUPLACU de BARCAU, ROMANIA

11.1. Summary Description of Refinery

The Crisana refinery is located in northwestern Romania, in the town of Suplacu de Barcau which is approximately 40 miles from Oradea City.

The refinery processes approximately 400 000 tonnes of local crude per year. The crude is extracted from underground reservoirs and supplied by pipeline to the refinery. The crude contains about 2 percent sulfur, and minimum amount of white ends. Only 5 percent of the crude oil is distilled at 240 °C. It is not suitable for lube manufacturing, but it is good for asphalt blowing.

The refinery process units include an atmospheric distillation unit, a vacuum distillation unit, kero neutralization capabilities, and asphalt blowing.

The block flow diagram and a estimated material balance for the refinery are shown in Figure No. 14.

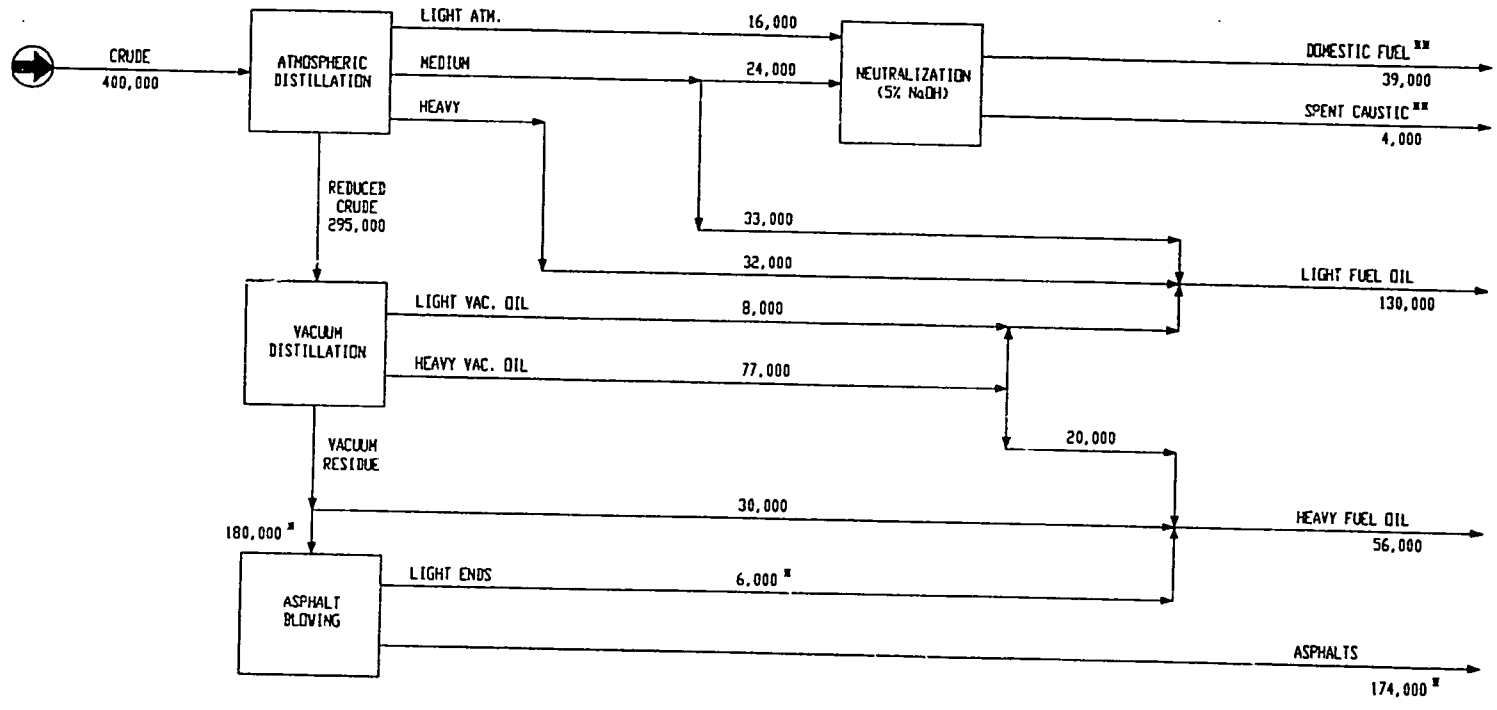

* MAXIMAL FIGURES DEPENDING ON MARKET DEMANDS, MORE VACUUM RESIDUE MAY BE DIRECTED TO THE FUEL POOL.

** MAY BE USED AS DIESEL COMPONENT, MIXED WITH PARAFFINIC CUTS IMPORTED FROM OTHER REFINERIES.

DATE	REV	BY	APPR.	DESCRIPTION
11/14/91	A	T.G.		FOR CHARACTERIZATION REPORT
5/20/92	0	EJF	AW	FOR FINAL REPORT

Davy McKee Corporation
CHICAGO ILLINOIS

CRISANA REFINERY
SUPLACU DE BARCAU, ROMANIA

OVERALL REFINERY
BLOCK FLOW DIAGRAM

DWG. No. 2063-41-11-101 | 0

FIGURE 14

11.2. The refinery produces the following products:

Refinery Products	Tonnes/y
Domestic fuel oil 6 Cst at 20 °C 55 °C flash point 0.2 con carbon	40 000
Light fuel oil 21 Cst at 50 °C 60 °C flash point 5% con carbon	130 000
Heavy fuel oil 70 Cst at 80 °C 90 °C flash point 12% con carbon	55 000
Asphalts paving 43-45 °C softening point A & B 80-120 mm/10 penetration 2% paraffin content industrial 45-55 R&B, min 40 penetration 1.8% paraffin hydroinsulation 82-92 R&B 10-20 penetration 2% paraffin	175 000

11.3. Utilities, Services, Offsites

Electricity generation and distribution

Electric power is imported from the national network at approximately 0.5 MW at 6 kV.

Steam generation and distribution

Steam is produced in the refinery boiler house at 10/12 tonnes per hour at 1.6 MPa.

Fresh water supply

Raw water is imported from the neighboring crude extraction company. It is already treated when it enters the refinery. The total water consumption is approximately 35 cubic meters per hour.

Cooling towers

A cooling tower was installed to reduce the raw water consumption. Boiler feed water is treated in the boiler house. Waste water is treated by API separation and chemicals.

Product Blending and Shipment

The crude oil and products are stored in fixed roof tanks. The tank capacity is 6 000 tonnes for crude and 7 000 tonnes for products. All liquid products are exported. Twenty percent are shipped by tank trucks and eighty percent are shipped in railroad cars. Approximately fifty percent of the asphalt is exported hot in tank trucks, the rest is packed in barrel cartons and shipped in railroad cars.

D. COAL AS AN ENERGY SOURCE

1. GENERAL REVIEW OF COAL USE IN REFINERY SERVICE

The availability of native coal makes a review of coal as an energy source of interest to the national economy. A study on the use of coal as an adjunct or substitute for hydrocarbon fuel streams is, therefore, included in this evaluation.

Heat is provided by burning a variety of fuels in directly fired heaters. Generally the fuels are a collection of effluent streams from the various operations around the refinery complex in both gaseous and liquid forms.

Coal is frequently used in industry as a fuel source. Generally it is used on large capacity boiler units. There are significant base investment and operating costs and activities associated with feed and ash handling equipment, sulfur removal, etc. that can be charged out over large installations, but prove too inhibitive in the economics of small units.

There are many ways of utilizing coal as a fuel. Probably the most applicable to the situation at hand are discussed below. The first two, direct coal firing and coal gasification, are discussed in some detail. Several others, such as coal liquefaction, coal-oil mixtures, coal fired gas turbines and coal gasification / fuel cells are touched upon briefly.

Coal usage in existing refinery process heaters would most likely be restricted to one of the methods in which a product fuel can be produced in one location and piped to the various users. Plot space in the vicinity of the existing furnaces along with safety considerations typically does not allow for coal and ash storage and handling facilities within the refinery processing area. Also existing equipment is not designed for the particulate loading experienced in the flue gas with coal firing. In addition, any required sulfur removal equipment would have to deal with flue gas clean-up on an individual process heater basis if there were not a central coal processing facility.

The entire refinery energy and equipment picture dictates if coal could incorporated into the refinery as a acceptable energy source. If a new process heater or utility boiler would be needed and the fuel balance allows for another fuel source, then the use of coal may be justified and the new coal technologies would be worth looking at. If the residual fuel picture changes because of modifications to the refinery, coal usage may be justified.

1.1 Direct Coal Firing

Coal usage is not a simple thing anymore. Gone are the days of stoking the fire by shovelful of run-of-mine coal and just letting it burn. Coal may need to go through physical cleaning, sizing and drying just to get it to the furnace. Burners are specially designed to achieve optimum efficiency and low NO_x emissions. Additives are injected to reduce ash sticking to heater tube walls, reduce SO_2 in the flue gas, etc. Flue gas may be subjected to further treatment such as wet scrubbing to reduce SO_2 to tighter levels of environmental acceptance.

Traveling grate burners bring the coal automatically to the burning chamber where the coal is combusted. Coal with a moisture content much above 30% must be dried before burning, so lignite / brown coals would most likely need pre-combustion drying. Hot under grate air can be used for this purpose. Ash builds up on the grate until it drops into a hopper. The ash is later removed from the hopper. Sulfur, however, must typically be dealt with after combustion if its' removal as sulfur oxides is necessary. Add on SO_2 equipment adds significant cost to a unit.

Modern direct coal burning systems include atmospheric and pressurized fluidized bed combustion (AFBC and PFBC) units that provide for gas burning, clean-up and heat recovery all in one unit. Limestone is used as part of the fluidizing medium and the calcium present in it reacts with the SO_2 before it is able to escape from the combustion chamber. The result is a non-toxic disposable by-product.

FBC technology is applicable to a wide variety of fuels including a wide range of coals, residual oil, petroleum coke, etc. AFBC technology for boilers is available commercially from a large number of licensors, while PFBC technology is still considered to be in the development stages. The application of FBC technology to a process heater may be possible, but it would require extensive pilot test runs and special considerations in equipment design.

1.2 Coal Gasification

Coal gasification has been utilized for a long time and there are several companies (Texaco, Lurgi, IGT, KRW, etc.) that have commercialized processes. The product from the gasification (H_2, CO, CO_2, + others) can be used as a chemical feedstock or a fuel gas. To produce a fuel gas of medium range heating value (9.3 - 18.6 MJ/m^3 or 250 - 500 Btu / SCF) suitable for burning in a process heater, oxygen must be used in the gasification. Because of the reducing conditions present in the gasifiers, most of the sulfur in the coal is converted to H_2S. H_2S can reliably removed from the gas stream by a number of available processes. In addition, it can further be turned into elemental sulfur.

Development work is being done for in-situ desulfurization in a fluidized bed coal gasifier. This process is much the same as the PFBC except that the product is a gas with a heating value instead of combustion product gases. It is also similar to the FBC technology in that it can utilize a wide variety of fuels, such as the sour residual oil produced within the refinery.

Fuel gas produced in this way can be piped into a plant fuel header and used anywhere around the facility. The attractiveness of this option is that the coal usage would be in one central location, while the fuel users could be in many different locations.

Another possible use of the gas produced via gasification could be as a fuel to a gas turbine. The gas turbine could be used to generate electricity or to provide a direct large capacity mechanical drive such as a compressor. The thermal efficiency of a gas turbine is typically raised by using the turbine exhaust gas to raise steam in a waste heat boiler, in a co-generation system.

Given the availability of coal in Romania, coal gasification technology should be watched closely and given full consideration at such time that energy economics dictate its use.. The selection of the proper technology to best fit the local brown coal characteristics should be kept in mind. In-country technical experts, we understand, are very well aware of the various technologies and are keeping abreast of current developments. Initial investment cost is high and although a project may be justified from a DCF or NPV basis, a shortage of hard currency may delay or defer action.

The cheapest source of fuel at this time is Russian natural gas. Alternate sources of fuel will not come to fruition until it is economical to do so.

1.3 Other Technologies

Coal liquefaction

Production of liquid fuels from coal can be either indirect or direct. In indirect liquefaction, the synthesis gas produced in a gasification step is further reacted to produce a readily burnable fuel (i.e., via the Fischer Tropsch process to naphtha, diesel and waxes or via syngas to methanol to gasoline). Since the gasification product would be an adequate fuel for the heaters on the refinery, there would be no need to go beyond that step to liquid fuels.

Direct liquefaction producing a No. 2 type fuel oil would be more applicable to the fuel needs in the refinery. Several processes have been developed since the 1960's including H-Coal, SRC-I, Exxon Donor Solvent, SRC-II, etc. (in the U.S.). The high cost and inefficiency associated with these processes led to the cutback

of further development of the technologies as they stood. The early processes have been modified and further developed by the United States Department of Energy (U.S. DOE) and industrial partners into two-stage liquefaction processes. These processes are still not available on a large commercial scale. Estimates are that the cost of a barrel of oil produced by coal liquefaction using such methods might approach $25/barrel by the late-1990's.

Coal oil / water mixtures

The use of coal slurried with oil or water to produce a usable fuel is also the subject of numerous studies and optimizations. There are even annual conferences on "Coal & Slurry Technology" sponsored by the Coal & Slurry Technology Association and the U.S. DOE's Pittsburgh Energy Technology Center (PETC). Coal water mixtures can be prepared with up to 70% solids, while current technologies and pilot plant results show coal oil mixtures are limited to 30 - 50% solids. Coal-oil mixtures could be prepared in one location and pumped around the plant to the various process heaters, however, emissions in terms of SO_2, NO_x and particulates would be a problem at each furnace.

Coal-fired gas turbines

Direct coal-fired gas turbines are being developed and improved by General Electric, Westinghouse, United Technologies, etc. The use of gas turbines in this manner on the refinery would most likely be restricted to electricity generation. Solids and impurities deposition on blades and casings would likely require frequent cleaning and duplication of equipment would be required to even out loads. Environmental control requirements would also likely limit the application of this technology to high quality coals.

Fuel cells

The combination of coal gasification and emerging fuel cell technology presents an attractive high efficiency electronic and heat energy generation possibility. Current projections, based on work sponsored by the US Department of Energy, indicate an efficiency between 45 and 55% in converting hydrocarbons directly to electricity. The H_2 and CO rich fuel from coal gasification is suited to fuel cell use, with CO_2 used in the cathode side of the cell.

Of the four major fuel cell technologies, two are worthy of mention here, phosphoric acid and molten carbonate. Phosphoric acid fuel cells are at a more advanced state, however, they operate in the range of 400 °F compared to molten carbonate cells at 1 200 °F.

The molten carbonate fuel cell is best suited for use with coal gasification in applications where there is need for good quality heat. The exhaust gas temperature of 1 200 °F is useful in the generation of high quality steam for process purposes. The use of bottoming cycles further enhances the system. Overall efficiencies, electrical and utilization of exhaust gas to generate steam, are in the order of 80%. The Department of Energy is sponsoring sub-megawatt tests of commercial sized units; these tests are scheduled for the 1993 calendar year.

While the technology Is not quite ready for commercial use, it is potentially attractive and should be watched closely.

2. AVAILABILITY AND CHARACTERISTICS OF COAL IN ROMANIA

Almost eighty-five percent of the coal mined in Romania is low quality lignite. See Table D.1. The stated heating value of lignite is only 1 500 kcal/kg and may even be lower in actual use. Current coal users report many problems connected with burning lignite, including:

- low efficiency
- energy loss in hot ash
- severe corrosion of equipment
- plugging caused by ash and sulfur deposits
- pollution
- special disposal problems connected with handling and dumping residual sterile and ash.

Currently, the coal supply is only sufficient to provide twenty percent of the electrical power generation. See Tables D.2 and D.3. In 1989, twenty-three percent of the energetic coal was imported. During 1990 and 1991, domestic coal production was further reduced, increasing Romania's dependency on imported resources.

In the future, the use of coal within the refineries is not feasible. Some reasons include:

- Romania does not have sufficient domestic coal resources to provide fuel for both refinery use and electrical power generation. Currently some of the coal used for electrical power generation is imported.

- Romanian coal is mainly low-quality lignite.

- Refinery furnaces are designed for fuel gas and fuel oil. Conversion to coal burning will require replacing or revamping the existing furnaces. Feasibility and economic analysis studies of furnace technology and waste heat recovery are required before considering conversion.

- Burning coals with high ash and sulfur content and metallic contaminants can result in unscheduled furnace shut-downs and clean-up problems.

- Burning low quality coals can result in costly maintenance requirements due to increased occurrences of corrosion, erosion, and plugging.

- Coal use may pose special environmental considerations such as the application of advanced technologies for flue gas treatment and cleaning, ash disposal, and waste heat recovery.

3. COAL IN THE ROMANIAN REFINERIES

At this time no coal is used in any of the Romanian refineries.

TABLE D.1 - ROMANIAN LIGNITE PROPERTIES

Lignite Mines	Virgin Coal Moisture (wt%)		Dry Coal (wt%)		Heating Value (kcal/kg)		Sulfur in Virgin Coal (wt%)	Volatile Matter in Virgin Coal (wt%)
	avg	max	avg	max	avg	max		
Jilt STAS 12140-83	43.0	46.5	42.5	50.0	1 610	1 400	1.5	22.0
Pesteane-Urdari STAS 12141-83	42.5	46.5	40.5	50.0	1 700	1 400	1.5	23.0
Albeni STAS 12142-83	41.0	46.5	45.5	50.0	1 575	1 400	1.5	22.0
Mshedinti STAS 12143-83	42.5	46.5	43.0	50.0	1 600	1 400	1.5	25.0
Voivozi STAS 12144-83	30.0	36.5	53.5	65.0	1 700	1 500	3.0	22.0
Morezu STAS 12145-83	35.0	40.0	50.0	55.0	1 600	1 400	1.5	26.0
Mehadia STAS 12145-83	26.0	30.0	40.0	48.0	2 500	2 100	3.0	40.0
Motru I STAS 12732-88	41.0	46.5	45.5	50.0	1 550	1 400	1.5	18.0
Motru II STAS 12733-88	42.5	46.5	43.0	50.5	1 600	1 400	1.5	18.0

Notes:
STAS = Romanian State Standard
Lignite coal = up to 85% of Romanian coal production
Lignite is produced in chips up to 150 mm.

TABLE D.2 - FUELS USED TO PRODUCE ELECTRICITY

Fuel Source	Produced Electricity (Percent)				
	1955	1960	1970	1980	1989
Total coal (lignite)	19.5 (11.6)	22.4 (9.7)	30.3 (117.2)	32.6 (20.1)	38.6 31.7
Fuel & gas oils	35.7	13.1	3.3	12.9	13.5
Natural gas	41.7	63.6	63.5	51.4	45.7
Other sources	3.1	0.9	2.9	3.1	2.2
Total	100.0	100.0	100.0	100.0	100.0

TABLE D.3 - CONSUMPTION OF CONVENTIONAL FUEL

Total Electricity Produced	Specific Consumption (kg) Conventional Fuel (7000 kcal/kg per 1000 KWH)				
	1955	1960	1970	1980	1989
Total coal (lignite)	820 (591)	561 (536)	373 (359)	384 (400)	417 (415)
Fuel & gas oils	631	502	349	32[illegible]	299
Natural gas	648	466	322	288	324
Total	723	502	341	325	357

TABLE D.4 - ROMANIAN ENERGY RESOURCES, 1989

Resources	Primary Energy					
	Total		Domestic		Imported	
	Per 1000 tonnes	Percent	Per 1 000 tonnes	Percent	Per 1000 tonnes	Percent
Coal	25 433	20.3	17 746	14.2	5 892	4.7
Pitcoal & anthracite	10 304	8.2	4 610	3.7	5 196	4.1
Lignite & brown coal	15 077	12.0	13 136	10.5	654	0.6
(Lignite)	(14 435)	(11.5)	(12 823)	(10.2)	(354)	(0.3)
Imported coke	1 063	0.8	---	---	1 063	0.8
Natural gas	46 191	36.9	37 807	30.1	8 384	6.7
Crude oil (fuel oil)	43 496	34.8	12 723	10.2	30 249	24.3
Imported fuel oils	527	0.4	---	---	527	0.4
Fire wood	878	0.7	824	0.7	---	---
Hydroelectricity	4 513	3.6	4 513	3.6	---	---
Imported electricity	2 792	2.2	---	---	2 792	2.2
Non-conventional sources	146	0.1	146	0.1	---	---
Total resources	125 340	100.0	78 784	58.9	48 962	39.1

Note:

1 There are some discrepancies in the reported data
2 Generation of electricity is 72% hydrocarbons (fuel oil & natural gas) and approximately 20% coal (50% of the coal is lignite).
3 Source: Romanian Statistical Yearbook, 1989, p. 498

BIBLIOGRAPHY

Cooper, B. R., & Ellingson, W. A. (1984). The Science and Technology of Coal and Coal Utilization. New York: Plenum Press.

R. Dellefield (personal communication, 19 July 1991). Morgantown Technology Center, United States Department of Energy. Morgantown, West Virginia.

Engineering & Economics Research, Inc., Hagler, Bailly & Co.,Inc., PEI Associates Inc., Spaite, P. W. (Eds.). (1986). Emerging Clean Coal Technologies. Park Ridge, NJ: Noyes Data Corporation.

Ekmann, J. M. (personal communication, 15 July 1991). Coal Combustion Division, Pittsburgh Energy Technology Center, United States Department of Energy. Pittsburgh, Pennsylvania.

Feldkirchner, H. (personal communication, 11 July 1991). Institute of Gas Technology. Chicago, Illinois.

Lord, N. W., Ouellette, R. P., Farah, O. G., & Cheremisinoff, P. N. (1982). Coal-Oil Mixture Technology. Ann Arbor, Michigan: Ann Arbor Science Publishers.

McGurl, G. V. (March 1990). Two-stage liquefaction of coal. PETC Review. Pittsburgh, Pennsylvania: Pittsburgh Energy Technology Center.

Podolski, W. F. (personal communication 19 July 1991). Chemical Technology Division. Argonne National Laboratory. Argonne, Illinois.

Scowden, J. (personal communication 15 July 1991). Detroit Stoker. Monroe, Michigan.

Stauffer, C. (personal communication 11 July 1991) Process Sales Company. Houston, Texas.

Vander Molen, R. H. (personal communication 19 July 1991). Combustion Power Company. Menlo Park, California.

APPENDIX A

REFINERY CHARACTERIZATION QUESTIONNAIRE

TABLE OF CONTENTS

		PAGE NO.
1.	General	1
2.	Refinery Configuration (including Material Balances)	4
3.	Properties and Specifications of Feeds and Products.	7
4.	Refinery Process Units	14
5.	Utility Information	14
6.	Off-Site Facilities	24
7.	Operating Cost Data	26
8.	Environmental Aspects	27
9.	Miscellaneous Information (Battery Limit Conditions)	41
10.	Instrumentation	42
11.	Mechanical Equipment Information	43
	APPENDIX	44

LIST OF TABLES AND FIGURES

TABLES		PAGE NO.
3-1	Crude Oil Properties	
3-2	LPG Properties	10
3-3	Gasoline Properties	10
3-4	Jet Fuel Properties	11
3-5	Diesel Fuel Properties	12
3-6	Fuel Oil Properties	13
5-1	Steam System	15
5-2	Water Treatment	16
5-3	Water Systems	18
5-4	Water Analysis	19
5-5	Fuel Gas Data	22
5-6	Electrical Power	21

FIGURES

2.1	Generic BFD (Simple Refinery)	5
2.2	Generic BFD (Intergrated Refinery)	6

Davy McKee

1. GENERAL

1.1 NAME AND LOCATION

Name: _____

Location: _____

_____

_____

1.2 CORRESPONDENCE

Correspondence relating to this project shall be directed as follows:

To the Refiner:

Name: _____

Address: _____

_____

_____

Attention: _____

Telephone No: _____ Telex No.: _____

Ext.: _____ TWX: _____

Telecopier No.: _____

Telecopier Model: _____

(Does it receive not attended? Yes / No Hours_____)

To Davy McKee

Name: DAVY MCKEE CORPORATION

Address: 300 S. Riverside Plaza

Suite 1800

Chicago, Illinois 60606 USA

Attention: _____

Telephone No: (312) 669-7000 Telex No.: 190146

Ext.: 7031 TWX: N/A

Telecopier No.: (312) 902-1236

Telecopier Model: Cannon 705

(Does it receive not attended? Yes / No Hours: 24 hours)

Davy McKee

1.3. SCOPE OF FACILITIES

(Provide a general overall description including infrastructure)

1.4 SYSTEM OF MEASUREMENT

Indicate from the following, the units being followed by the refinery. (By circling selection for each of the following condition or property).

	ENGLISH	MKS	SI
Temperature	°F	°C	°C
Pressure	psi	kg/cm²	kPa
Mass	lb	kg	kg
Length	ft-in	m-mm	m-mm
Relative Density	Spec Gravity T°F/60°F	Spec Gravity T°C/15°C	Spec Gravity T°C/15°C
Absolute Density	°API or lb/gal at 60°F	kg/m³ at 15°C	kg/m³ at 15°C
Flowing Density	lb/ft³	kg/m³	kg/m³
Flowing Quantities			
Mass	lb/hr	kg/h	kg/h
Vapor	ft³/sec	m³/h	m³/h
Liquid	U.S. gal/min	m³/h	m³/h
Standard Quantities			
Vapor	10^6 std ft³/day at 60°F	normal m³/h at 0°C	std m³/h at 15°C
Liquid	bpd at 60°F	std m³/h at 15°C	m³/h at 15°C
Enthalpy	Btu/lb	kcal/kg	kJ/kg
Heat Rate	10^6 Btu/hr	10^6 kcal/hr	MW

It will be assumed that all data provided by refinery will be in the above units, unless noted otherwise.

1.5 SITE INFORMATION

1.5.1 Climatic Data

Winterizing provisions are based on _____ °_____.

Direction of prevailing wind is from _____.

1.5.2 Unit Elevation

Indicate elevation of refinery site above sea level _____.

(Average Barometric Pressure _____.)

Design Dry Bulb Temperature is _____°_____.

Design Wet Bulb Temperature is _____°_____.

2.0 REFINERY CONFIGURATION

2.1. REFINERY BLOCK FLOW DIAGRAM

Provide a Block Flow Diagram similar to Figures 2.1 or 2.2.

Figure 2.1 is a generic Block Flow Diagram for a very simple refinery, with the exception of a TOPPING UNIT or a LUBE OIL REFINERY.

Figure 2.2 is a generic Block Flow Diagram for a fully integrated refinery. This figure is only for reference, not many refineries consist of that many units.

The Desalter is not shown on the Block Flow Diagram. However, it should be shown if it exists.

2.2 Provide a list of the Refinery utilities and off-site facilities. (The Block Flow Diagrams in section 2.1 show only the process units.)

2.3 OVERALL MATERIAL BALANCE

Crude oil throughput:
Imported Blending Stocks:

Products:

LPG:
Regular Gasoline:
Premium Gasoline:
Solvents:
Feeds to Aromatic Complex:
Feeds to Petrochemical Complex:
Aviation Fuels:
Diesel Fuels:
Heating Oils:
Lube Oils:
Greases:
Asphalts:
Industrial Fuels:
Coke:
Etc.:

2.3.1 Provide the names and monthly (average) consumption quantities of various chemicals (treating, process, corrosion inhibitors, etc.) and catalysts. Include gasoline additives such as MTBE, TEL, etc., and additives for lube oils.

-364

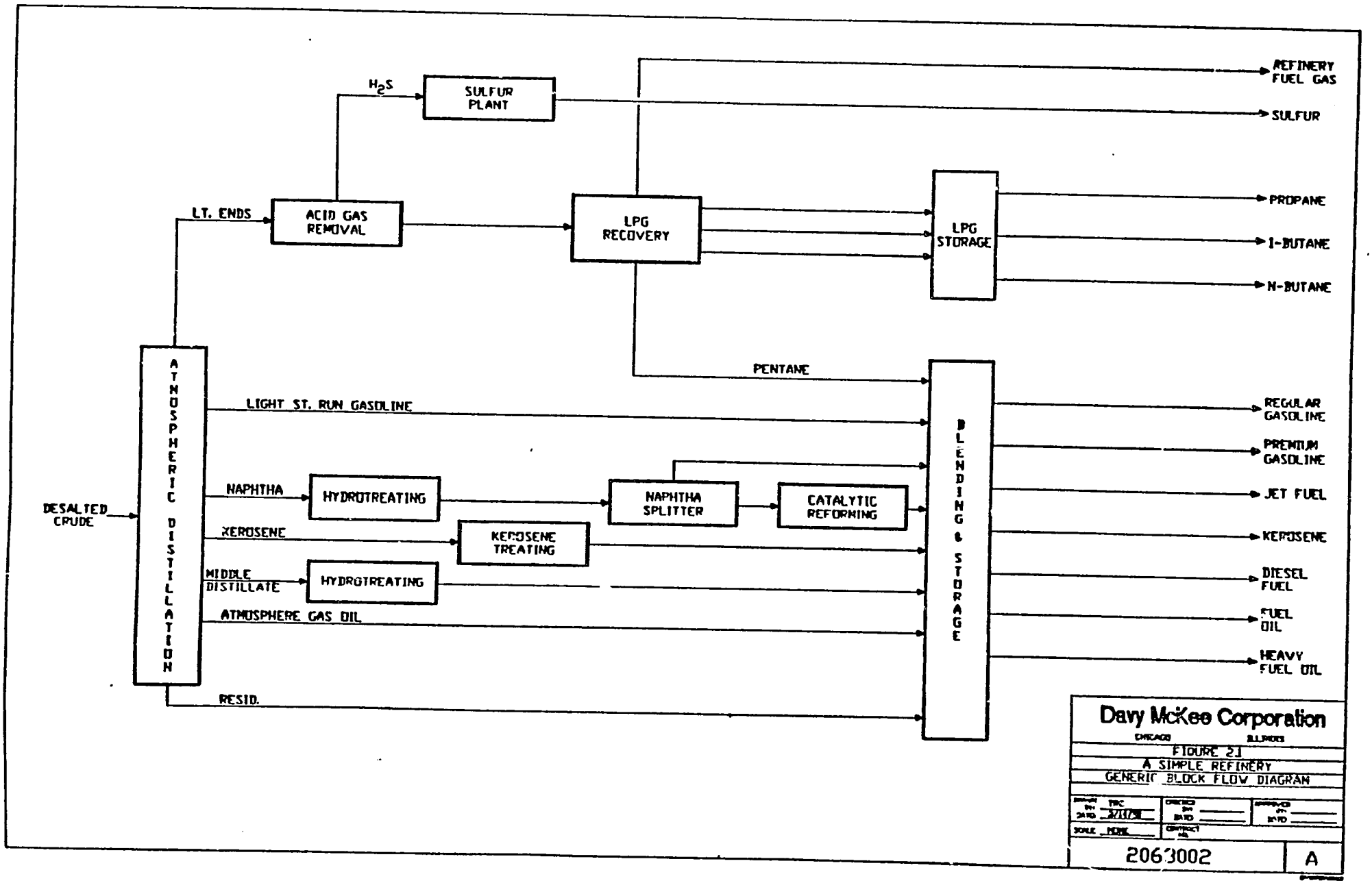
DESALTED CRUDE
ATMOSPHERIC DISTILLATION
LT. ENDS
ACID GAS REMOVAL
H_2S
SULFUR PLANT
LPG RECOVERY
LPG STORAGE
REFINERY FUEL GAS
SULFUR
PROPANE
I-BUTANE
N-BUTANE
PENTANE
LIGHT ST. RUN GASOLINE
NAPHTHA
HYDROTREATING
NAPHTHA SPLITTER
CATALYTIC REFORMING
KEROSENE
KEROSENE TREATING
MIDDLE DISTILLATE
HYDROTREATING
ATMOSPHERE GAS OIL
RESID.
BLENDING & STORAGE
REGULAR GASOLINE
PREMIUM GASOLINE
JET FUEL
KEROSENE
DIESEL FUEL
FUEL OIL
HEAVY FUEL OIL
Davy McKee Corporation
CHICAGO ILLINOIS
FIGURE 2.1
A SIMPLE REFINERY
GENERIC BLOCK FLOW DIAGRAM
2063002
A

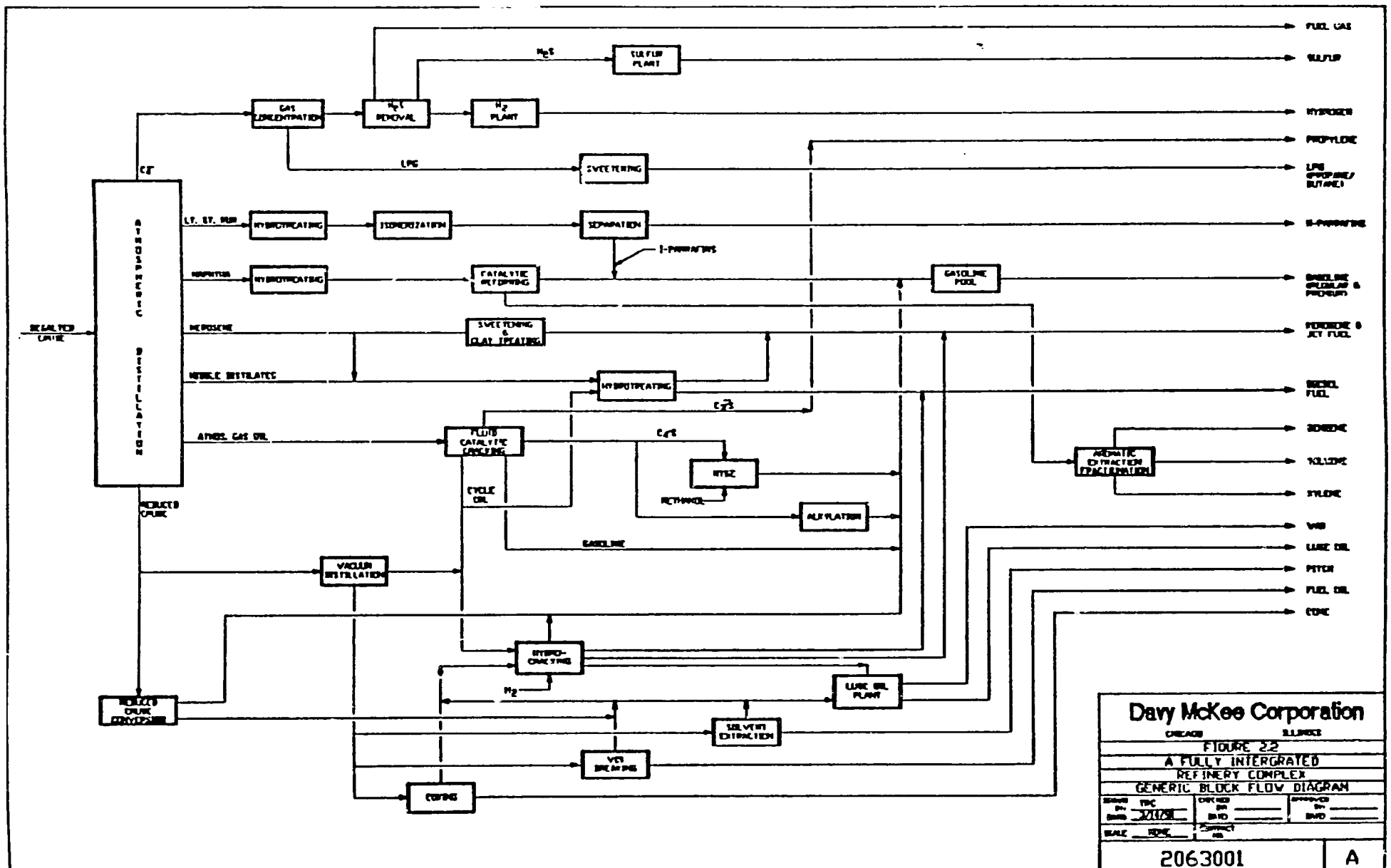
Davy McKee Corporation
FIGURE 2.2
A FULLY INTERGRATED
REFINERY COMPLEX
GENERIC BLOCK FLOW DIAGRAM
2063001
A
FUEL GAS
SULFUR
HYDROGEN
PROPYLENE
LPG (PROPANE/BUTANES)
N-PARAFFINS
GASOLINE (REGULAR & PREMIUM)
KEROSENE & JET FUEL
DIESEL FUEL
BENZENE
TOLUENE
XYLENE
VGO
LUBE OIL
PITCH
FUEL OIL
COKE
CRUDE
ATMOSPHERIC DISTILLATION
GAS CONCENTRATION
H_2S REMOVAL
H_2 PLANT
SULFUR PLANT
LPG
SWEETENING
LT. ST. RUN
HYDROTREATING
ISOMERIZATION
SEPARATION
N-PARAFFINS
NAPHTHA
HYDROTREATING
CATALYTIC REFORMING
GASOLINE POOL
KEROSENE
SWEETENING & CLAY TREATING
MIDDLE DISTILLATES
HYDROTREATING
ATMOS. GAS OIL
FLUID CATALYTIC CRACKING
CYCLE OIL
GASOLINE
MTBE
METHANOL
ALKYLATION
AROMATIC EXTRACTION FRACTIONATION
VACUUM DISTILLATION
REDUCED CRUDE
REDUCED CRUDE DEVISCOSING
HYDRO-CRACKING
H_2
LUBE OIL PLANT
SOLVENT EXTRACTION
VGO BREAKING
COKING

3.0 PROPERTIES AND SPECIFICATIONS OF FEEDS AND PRODUCTS

3.1 Feeds to Refinery

3.1.1 For Crude Oil (or oils) processed, provide properties for each of the crude oils processed as indicated in Table 3-1.

In addition to Table 3-2, the following would be required (for each crude oil) to perform analysis of atmospheric crude distillation:

1. TBP Curve, with mid-volume plots of gravity, viscosity, and sulfur.
2. Light ends analysis up through hexanes.
3. Characterization factor (UOP or Watson k) for whole crude.
4. For vacuum unit (if it exists), provide vacuum distillation (D-1160) for residua.

TABLE 3-1 CRUDE OIL PROPERTIES

Crude Name Source (Country)				
Crude Inspection				
Gravity, °API				
Sulfur, Wt. %				
Pour Point, °F				
Viscosity, cs at 130°F				
Conradson Carob, Wt. %				
Asphaltenes & Resins, Vol. %				
Metals, Ni + Va, PPM				
Gasoline, C-405°F (C5-207°C)				
Yield, Vol. %				
Sulfur, Wt. %				
Octane, F-1, 3 ml TEL				
Light Gas Oil, 405-650°F (207-344°C)				
Yield, Vol. %				
Gravity, °API				
Sulfur, Wt. %				
Pour Point, °F				
Characterization Factor				
Heavy Gas Oil, 650-1000°F (344-538°C)				
Yield, Vol. %				
Gravity, °API				
Sulfur, Wt. %				
Viscosity, cs at 130°F				
Wax Content, Wt. %				
Characterization Factor				
Residuum 1000°F PLUS				
Yield, Vol. %				
Gravity, °API				
Sulfu., Wt. %				
Viscosity, cs at 210°F				
Viscosity Index of Dewaxed Lubricating Oil				

3.1.2 Properties and Specifications of Feeds other than Crude Oil

Provide properties of following (if available, also provide the source):

a. Fuels (oil, gas, or coal)

b. Inert gas (Nitrogen)

c. Treating chemicals (for water, steam, cooling tower, wastewater, etc.)

d. Corrosion inhibitors

e. Other chemicals used in the processing (e.g., Caustic, Sulfuric Acid, Carbon Tetrachloride, Sufiding Agents, Amines, etc.)

f. Catalysts (specify source and specification)

g. Gasoline additives, e.g, MTBE and TEL., etc.

h. Lube oil additives

3.2 PROPERTIES AND SPECIFICATION OF PRODUCTS

Indicate the following properties of various products:

LPG (LIQUEFIED PETROLEIUM GASES) TABLE 3-2

Composition	PROPANE	BUTANE	LPG
Vapor Pressure at 100°F			
Volatile Residue,			
Butane and Heavier, LV % (Max)			
Pentane and Heavier, LV% (Max)			
Residual Matter			
Corrosion, Copperstrip, Max.			
Total Sulfur, ppmw			
Moisture Content			
Free Water Content			
If Bottled at Refinery?	YES/NO	YES/NO	YES/NO

GASOLINES TABLE 3-3

TYPE GRAVITY	REGULAR	PREMIUM
Octane Number RON MON		
Distillation, Volume 10% 50% 90% EP		
Distillation Residue, % Wt.		
RVP		
Sulfure Content, % Wt.		
MTBE Content, % Vol.		
TEL Content (if any)		

321

JET FUELS (AVIATION FUEL) TABLE 3-4

TYPE GRAVITY		
Distillation, Volume IBP 10% 50% 90% EP		
Distillation Residue, % Wt.		
Viscosity		
Aniline Point		
Freeze Point		
Flash Point		
Total Sulfur, Wt. %		
Mercaptan, Wt. %		
Aromatic Content, Vol. %		
Doctor Test		
Smoke Point		
Gum mg/100 ml		
Net Heat of Combustion		

328

DIESEL FUELS TABLE 3-5

TYPE GRAVITY		
Distillation, Volume IBP 10% 50% 90% EP		
Viscosity		
Pour Point		
Flash Point		
Sulfur Content, ppmw		
Carbon Residue		
Ash		
Water and Sediment, % Vol.		
Corrosion, Copper Strip		
Cetane Number, Min.		

329

FUELS OILS TABLE 3-6

TYPE GRAVITY		
Distillation, Volume 10% 90%		
Viscosity		
Flash Point		
Pour Point		
Sulfur, % Wt.		
Carbon Residue %		
(on 10% bottoms)		
Ash, % Wt.		
Corrosion, Copper Strip		

3.2.6 Provide properties and specifications of any other product from the refinery, such as, sulfur, lube oils, pitch, greases, coke, asphalts, road oils, tars, solvents, petrochemicals and aromatic feed stocks produced in the refinery, etc.

330

4.0 REFINERY PROCESS UNITS

See LP Data Base in Appendix.

5.0 UTILITY INFORMATION

5.1 Steam System (and Hot Oil System, if it exists)

Provide details of on-site steam generation, i.e., type of boiler (gas, oil, or coal fired).

Provide Boiler Capacity and steam quality.

Provide details of Boiler Blowdown disposition.

5.1.1 Systems may be identified in general terms such as High Pressure, Medium Pressure, Low Pressure, etc., or as nominal pressure levels such as 600 PSIG, 150 PSIG, etc.

Minimum steam pressures and temperatures are the lowest pressures and temperatures which may be expected at any point in the area header.

Normal steam pressures and temperatures are the pressures and temperatures which may be expected at any point in the area header.

Maximum steam pressures and temperatures are the highest pressures and temperatures which may be expected at any point in the area header.

Design pressures and temperatures are the conditions specified for the mechanical design of piping and equipment.

331

STEAM SYSTEM TABLE 5-1

System Identification	Pressure				Temperature			
	Min.	Norm.	Max.	Design	Min.	Norm.	Max.	Design

5.1.2 Condensate Systems

If there are more than one condensate systems, describe each separately.

The typical condensate system may contain a drum or receiver, anywhere in the refinery.

The condensate is pumped from the receiver to a polishing system at the boiler plant.

5.1.3 Hot Oil System

Provide details of Hot Oil System (or belt), if used in the refinery.

Provide specifications of the hot oil used.

5.2 WATER SYSTEM

5.2.1 Is raw water used directly as cooling tower make-up water? YES/NO

5.2.2 Describe the treatment of raw water for the following uses and provide generica. names of chemicals used:
(1) potable water,
(2) water used for purposes other than BFW and cooling tower.

5.2.3 Boiler Feed Water (BFW)

Provide the following information about the chemical treating used in steam generators and corrosion control treatment for steam and condensate systems.

WATER TREATMENT TABLE 5-2

System Identification	Method of Feeding And Location of Feed Point	Chemicals Used

333

5.2.4 Cooling Water System(s)

Describe the Cooling water system. If more, then one, describe each system and identify the units it serves. For each system, provide the following:

If it is a once through type system, provide the source of the cooling water. Provide the type of treatment and chemicals used.

If it a closed cooling water system, provide the type and number of cooling towers. Identify the generic names of chemicals used for treatment.

Provide the destination of the cooling tower blowdown.

Provide the capacity of the cooling water pumps and indicate number of operating and spare pumps. Indicate, if any, steam turbine driven pump is installed.

5.2.5 Provide following information on water system

WATER SYSTEMS TABLE 5-3

DESCRIPTION	REFINERY RAW WATER SUPPLY	ONCE-THROUGH COOLING WATER	CIRCULATING COOLING WATER	TREATED BOILER FEEDWATER
Source				
Supply Temperature, °_____				
Supply Pressure, _____ At battery Limits at Grade				
Return Pressure, _____ At battery Limits at Grade				
Exchanger Inlet Water Temperataure, ° _____				
Exchanger Outlet Water Temperataure, ° _____ (Max)				
Exchanger Water Side Design Temperataure, ° _____				
Exchanger Water Side Design Pressure, _____				
Fouling Resistance _____				

WATER ANALYSIS TABLE 5-4

DESCRIPTION	REFINERY RAW WATER SUPPLY	ONCE-THROUGH COOLING WATER	TREATED BOILER FEEDWATER
pH			
Total Hardness as $CaCO_3$, PPM			
Calcium as $CaCO_3$, PPM			
Magnesium as $CaCO_3$, PPM			
"P" Alkalinity as $CaCO_3$, PPM			
Sulfate as SO_4, PPM			
Chloride as Cl, PPM			
Silica as SiO_2, PPM			
Iron as Fe, PPM			
Total Dissolved Solids, PPM			
Suspended Solids, PPM			
Turbidity, PPM			
Conductivity, MicroMHOS/CM			

7,16

5.3 REFINERY FUEL SYSTEM

Provide a description of the refinery fuel system. Indicate the amount and type of fuel being imported into the refinery.

5.3.1 Coal as Fuel
If coal (or coals) is used as a fuel, provide complete analysis and net heating value. Describe current coal receiving, storage, handling and preparation systems. Indicate if coal is the primary or supplemental fuel.

5.3.2 Liquid Fuels
If liquid fuels, such as, LPG, Naphtha, Fuel Oils, etc., are used as fuels, provide descriptions of the systems. The system may include receiving, storage, pumping and distribution.

5.3.3 Fuel Gas
Provide a description of the fuel gas system, i.e,, fuel gas drum, operating conditions and distribution.

Indicate the properties of pilot gas if not supplied from the refinery fuel gas header, (i.e., imported into the refinery).

A. Is the existing fuel gas system steam traced? YES / NO

B. Is the existing fuel gas system provided with local liquid knockout drum? YES / NO

5.4 ELECTRICAL POWER

Describe the on-site power generation, i.e., type of turbo-generato and its driver.

If power is imported, indicate the source.
Describe the overall electrical system, including stepdown, distribution, load shedding, reliability, etc.

Provide information on emergency generator.

Provide the following information relating to the electrical power system:

ELECTRICAL POWER TABLE 5-6

SERVICE	HORSEPOWER RANGE FROM	HORSEPOWER RANGE TO	NAME PLATE VOLTAGE	PHASE	FREQUENCY (HERTZ-Hz)
MOTORS					
INSTRUMENTS					
LIGHTING					

FUEL GAS DATA TABLE 5-5

PROPERTY	SOURCE	
	REFINERY	IMPORTED
Composition (Volume %)		
H2S		
H20		
CO		
CO2		
O2		
N2		
H2		
C1		
C2=		
C2		
C3=		
C3		
C4=		
C4		
iC4		
nC4		
C5=		
iC5		
nC5		
C6+		
TOTAL	100%	100%

5.5 PLANT AND INSTRUMENT AIR

Provide the capacity and type of air compressors, coolers and driers. Indicate the sparing policy.

Does system furnish oil free air? YES / NO

Indicate dew point for instrument air; ___°_____.

Indicate system header pressure; _____.

5.6 REFRIGERATION SYSTEM

Provide the type and capacity of the refrigeration system, if any.

Indicate the refrigerant used.

5.7 INERT GAS SYSTEM

Indicate the source of inert gas and its quality.

If on-site inert gas generation is available, provide details of the equipment, capacity, etc.

6.0 OFF-SITE FACILITIES

The refinery off-site facilities normally include the following:

6.1 Flare and Blowdown Systems.
Provide size (Tip Diameter) and height of flare stack (or stacks), drums and header sizes.

Provide the size of the condensate return system including pump, hydrocarbon knockout drum, etc.

Provide sizes of ground flares, if any.

6.2 Flue Gas Treatment (if any).
Provide description and capacity of the unit. If it is a licensed unit, provide the name of licensor.

6.3 Waste Disposal.
Provide description of waste disposal in terms of solids, liquid and gaseous streams.

If coal is used as fuel, describe treatment and disposition of ash.

6.4 STORAGE, BLENDING AND TRANSFER

6.4.1 Provide storage capacities for all feeds into the refinery. Major feeds to the refinery are crude oils from various sources. In addition, refinery may have feeds in terms of treating chemicals, catalysts, corrosion inhibitors, inert gases, methanol, MTBE, fuel oil, fuel gas, solvents, etc.

6.4.2 Provide storage capacities of all products, including all intermediate storage. Products from an integrated refinery may include: LPG, gasolines, kerosene, jet fuel, diesel fuel, aromatic, lube oils, fuel oils, etc.

6.4.3 Besides capacities, provide the size and type of storage vessels and tanks. For example, LPG storage could be in bullets, spheres or atmospheric (refrigerated) tanks, gasoline could be in fixed or floating roof tanks.

6.4.4 Provide description and capacities of various blending units, i.e., gasoline, fuel oil, etc.

6.4.5 Indicate the mode of transportation for feeds and products, i.e., pipeline, truck, or railroad.

6.5 Fire Protection Equipment

Provide details of fire protection equipment.

7.0 OPERATING COST DATA

Provide estimated variable costs of the following: (Note 1)

Electrical Power

Fuel

Raw Water

Treating Chemicals (Boilers, Cooling Water etc.)

Catalysts

Steam

Cooling Water

Additives for Gasolines

Additives for Lube Oils

Crude Oils

Products

Other Chemicals

Etc.

NOTE 1: At least some cost data, in appropriate units, is required in order to conduct any techno-economic evaluation.

Davy McKee

8.0 ENVIRONMENTAL SURVEY

Emergency Energy Program for East & Central Europe
Davy McKee Job No, 2063

I. WATER SUPPLY

A. Process Water.

1. Source: _____

_____

2. Capacity: _____ L/M

3. Chemical Quality- as used:

TEST	Units	TEST	Units
TDS	_____	OIL/GREASE	_____
TSS	_____	PHENOL	_____
COD	_____	AMMONIA	_____
BOD	_____	CHROMIUM	_____
TOC	_____	ZINC	_____
pH	_____	SULFITES	_____
Fe	_____	HARDNESS	_____

4. Pretreatment before use:
   a. pH control. _____
   b. Settling. _____
   c. Flocculation/Sedimentation. _____
   d. Filtration. _____
   e. Other. _____

B. Drinking Water.

If a different source than (I-A) above, complete same information as requested in (I-A-1) through (I-A-4-e).

1. Source: _____

_____

2. Capacity: _____ L/M

3. Chemical Quality- as used:

TEST	Units	TEST	Units
TDS	_____	OIL/GREASE	_____
TSS	_____	PHENOL	_____
COD	_____	AMMONIA	_____
BOD	_____	CHROMIUM	_____
TOC	_____	ZINC	_____
pH	_____	SULFATES	_____
Fe	_____	HARDNESS	_____

4. Pretreatment before use:

   a. pH control. _____
   b. Settling. _____
   c. Flocculation/Sedimentation. _____
   d. Filtration. _____
   e. Other. _____

C. Cooling Tower Water:

1. Source of water _____
2. If same as (I-A) or (I-B) above:
   a. Once through. _____
   b. Cooling tower loop. _____
3. Additional pretreatment other than (I-A-4) or (I-B-4)? Define. _____
4. Recycle water treatment:
   a. Corrosion control. _____
   b. Biocides. _____
   c. TDS of recycle/blowdown _____
5. Recycle rate _____ L/M
6. Make-up rate _____ L/M
7. Blowdown rate _____ L/M
8. Blowdown discharge to: _____

D. Boiler Feed Water.

1. Source: _____

2. BFW Treatment:

   a. Softening: Resin_____ Lime_____
   b. R.O._____
   c. Ion Exchange. _____
   d. Waste heat distillation._____

3. Water Treatment Chemicals:

   a. H_2SO_4 _____
   b. HCl _____
   c. NaOH _____
   d. Na_2SO_3 _____
   e. H_2NNH_2 _____
   f. Phosphates _____
   g. Other _____

4. Regenerant discharge: _____L/cycle_____cycles/day

   To:_____

5. Blowdown discharge rate:_____L/M_____To

Davy McKee

II. STORM WATER

A. Tank Storage Areas.

1. Tank areas diked to prevent the spread of oil leaks?
   Yes_____ No_____

2. Capacity of the diked area verses the capacity of largest tank?
   1:1 1:1.1 1:1.25 other _____

3. Inside of dike: earth: concrete: plastic liner.

4. Method of removing the trapped oil/water?_____
   _____

5. Oil skimming provided? Yes _____ No _____

B. Process Area.

1. Area curbed to prevent rain water run on? Yes ___ No ___

2. Disposition of the rain water falling on the process area?_____
   _____

3. Are the following leaks/drains contained?

   a. Pump seals: Yes __ No __
   b. Valve stems: Yes __ No __
   c. Flanges: Yes __ No __
   d. Sample line drains: Yes __ No __
   e. Tank overflow lines: Yes __ No __
   f. Pump casing drains: Yes __ No __
   g. Control valve drains: Yes __ No __
   h. Heat exchangers: Yes __ No __

C. Roadways, Parking Lots & Roof Drains.

1. Are these rain water flows separated from A & B above?
   Yes __ No __

2. If No above, could they be separated at a reasonable cost?
   Yes __ No __

D. Stormwater Treatment. Define for each system.

1. No treatment. _____

2. (A), (B), (C) above treated? (circle which).

3. Treatment.

   a. Lagoon with oil skimming. _____
   b. Biological treatment._____
   c. Held for Plant make-up water._____
   d. Other - define on separate page._____

4. Chemical quality of outlet water.

   a. TSS_____
   b. TDS _____
   c. Fats/Oils/Grease _____
   d. BOD _____
   e. COD _____
   f. pH _____
   g. Discharged to _____

III. ON-SITE WATER SYSTEMS

A. Attach a sites plan showing the locations and routing of the following:

1. Roof drain sewers.
2. Roadway and Parking lot sewers.
3. Open area catch basins and sewers.
4. Storage tank area drains and sewers.
5. BS&W drain/sewers.
6. Process water drain/oily sewers.
7. Process area stormwater sewers.
8. Sour water piping and sewers.
9. Wastewater treatment units.
10. Solid waste storage/disposal sites.
11. Water supply.
12. Barometric condenser drains.

B. Attach block flow diagrams of any wastewater treatment systems on any of the above sewers or combinations of sewers. Show-

1. Pump stations.
2. Equalization basins.
3. Flow control devices.
4. Chemical additions.
5. Oil skimming.
6. Settled solids removal.
7. Air/steam stripping.
8. Aeration area for chemical oxidation.
9. Biological treatment BOD/COD.

10. Effluent equalization.

11. Points of water discharge to off-site.

12. Sample locations.

    a. Flow rates.
    b. Chemical quality. (I-A-3)

13. Any current recycle system.

14. Any recycle system being considered.

Davy McKee

IV. WASTEWATER TREATMENT

A. For each major unit shown on the block flow diagrams (III-B) give the critical data:

1. Volume. _____

2. Length, width & liquid depth. _____

3. Pump rates. _____

4. Water quality in/out. (I-A-3) _____

5. Chemicals added. _____

6. Method of sludge disposal. _____

   a. Quantity. _____cu. m.
   b. Frequency. _____

7. Method of skimmed oil disposal. _____

8. Design flow rates. _____

9. Energy consumed at each unit. _____

B. Provide process flow diagrams showing the typical Chemical Engineering parameters.(If available)

V. NOISE LEVEL

During the Characterization, Evaluation and the Environmental visits, those areas for observed excessive noise levels will be noted. no field measurements are to be made at this time. If simplified and economical method of control is evident to the Team, this will be noted as defined. If the excessive noise is due to a complex of sources, this will be noted for potential future study.

Davy McKee

VI. SOLID WASTE

A. Crude tankage silt.

1. Quantity and frequency of removal. _____

2. Method of disposal. _____

B. Atm./Vacuum still bottoms.

1. How used? _____

2. How disposed? _____

C. FCC fines/spent catalyst.

1. How collected? _____

2. How disposed? _____

3. Quantity? _____

D. Spent caustic.

1. Quantity? _____

2. How disposed? _____

E. Water treatment sludge.

1. Quantity? _____

2. How disposed? _____

352

Davy McKee

F. Oil/water separator.

1. Quantity of oil and how disposed? _____

2. Quantity of sludge and how disposed? _____

G. Wastewater treatment sludge.

1. Quantity? _____

2. How disposed? _____

H. Boiler system.

1. Fly ash quantity and how disposed? _____

2. Bottom ash quantity and how disposed? _____

35

VII AIR POLLUTION

A. Benzene:

Benzene has been defined as a carcinogenic substance. If the Evaluation Team suspects the presence of Benzene, a MSA benzene tube tester will be used. The tube tester will only confirm the presence of 2 - 150 ppmv at the time of sampling. Those areas suspect and tested shall be noted and the results recorded. Before control systems can be designed, an in depth study must be conducted.

B. Storage tanks:

1. Crude: (Vapor pressure) _____

   a. Covered _____ Uncovered _____
   b. Capacity _____cu.m
      i. Diameter _____ m
      ii. Height _____ m
   c. Number _____
   d. Vent control:
      i. None. _____
      ii. Conservation valve. _____
      iii. Carbon adsorption. _____
      iv. Flare system. _____

2. Light ends: (Vapor pressure) _____

   a. Covered _____ Uncovered _____
   b. Capacity _____cu.m
      i. Diameter _____ m
      ii. Height _____ m
   c. Number _____
   d. Vent control:
      i. Conservation valve. _____
      ii. Carbon adsorption. _____
      iii. Flare system. _____
      iv. Other _____ Define _____

3. Middle Distillate: (Vapor Pressure) _____

   a. Covered _____ Uncovered _____
   b. Capacity _____cu.m
      i. Diameter _____ m
      ii. Height _____ m
   c. Number _____

d. Vent control:
   i. Conservation valve. _____
   ii. Carbon adsorption. _____
   iii. Flare system. _____
   iv. Other _____ Define _____

4. Resid: (Vapor Pressure) _____

   a. Covered _____ Uncovered _____
   b. Capacity _____ cu.m
      i. Diameter _____ m
      ii. Height _____ m
   c. Number _____

   d. Vent control:
      i. Conservation valve. _____
      ii. Carbon adsorption. _____
      iii. Flare system. _____
      iv. Other _____ Define _____

C. Heaters (complete for each heater & boiler):

1. Unit number. _____

2. Fuel. _____

3. Fuel composition - attach a copy.

   a. J/gm _____ HHV
   b. Sulfur content. _____%
   c. Ash content. _____%
   d. Moisture content. _____%

4. Firing rate. _____ Kg/Stream Hr.

5. Pollution control:

   a. Particulate:
      i. Type. _____
      ii. Efficiency. _____%
   b. Sulfur:
      i. Type. _____
      ii. Efficiency. _____%
   c. NO_x
      i. Type. _____
      ii. Efficiency. _____%
   d. CO:
      i. Type. _____
      ii. Efficiency. _____%

D. Sulfur recovery:

1. Yes _____ No _____

2. If yes, recovery: _____%

$$\frac{\text{Total S Recovered}}{\text{Total S to refinery}}$$

3. Process name: _____

E. NO_x & SO_x

MSA sample tube testers are provided to the Evaluation Team. The NO_x level is 0.5 - 50 ppmv and the SO_x level is 1-150 ppmv. These tubes will only confirm the presence of the pollutant at the time of sampling. Before any design can be performed, a detailed sampling program must be completed.

F. Process losses.

1. Define the flows to the flare. _____

2. Define the type of flare. _____

3. Flare burning control. _____

4. Frequency of "sniffing" the valve stems, flanges, pump & compressor seals, and the pressure control valves? _____

5. Define other hydrocarbon vent losses not routed to carbon adsorber or the flare. _____

6. Estimate the number of each of the following:

a. All process streams:

i. Open ended valves. _____

ii. Process drains. _____

b. Gas streams:

i. Open ended valves. _____

ii. Process drains. _____

c. Light liquid & gas/liquid:

i. Open ended valves. _____

ii. Process drains. _____

d. Heavy liquids:

i. Open ended valves. _____

ii. Process drains. _____

e. Hydrogen stream:

i. Pipe line valves. _____

ii. Compressor seals. _____

G. Fuel Costs at the refinery:

a. Fuel gas: _____
b. Natural gas: _____
c. LNG: _____
d. LPG: _____
e. Brown coal: _____
f. Soft coal: _____

H. Solid fuels:

Collect a copy of a "typical" ultimate fuel analysis.

9.0 MISCELLANEOUS INFORMATION

9.1 Battery Limit Requirements

9.1.1 Indicate the following battery limit information for streams, including hydrocarbon and chemicals, entering the refinery.

INCOMING STREAM	SOURCE	PRESSURE ____	TEMP ____

9.1.2 Indicate the following battery limit information for outgoing streams:

OUTGOING LIQUID STREAM	DESTINATION	DESTINATION PRESSURE ____	DESTINATION TEMP. ____

10.0 INSTRUMENTATION

Describe the refinery instrumentation in general. Provide a listing of the symbols used to indicate controls in Piping and Instrument Diagrams.

10.1 General Control Concept/Philosophy

10.1.1	Is Refinery control Centralized?	Yes	No
10.1.2	Does Refinery have both centralized control and unit centralized control?	Yes	No
10.1.3	Does refinery only have control at the unit level?	Yes	No
10.1.4	Is control at the unit all local?	Yes	No

10.2 Instrument Type

10.2.1 Control Room Type

1.	Pneumatic?	Yes	No
2.	Electronic?	Yes	No
3.	Distributed Control?	Yes	No
4.	PLC?	Yes	No
5.	Main Frame Computer?	Yes	No
6.	CRT Based?	Yes	No
7.	Panel Mounted Based?	Yes	No

10.2.2 Field Instrumentation Type

1.	Pneumatic?	Yes	No
2.	Electronic?	Yes	No

11.0 MECHANICAL EQUIPMENT INFORMATION

See Data Base for Physical Characteristics in Appendix.

APPENDIX

A. Refinery Organization Chart

B. Overall Refinery Plot Plan

C. Summary of Last 12 Months Operation

D. Spare Parts Policy and Description of Current Maintenance Facilities

E. Loss Analysis

F. LP Data Base

G. Physical Characteristic of Refinery

ABBREVIATIONS

°API	deg API (gravity of oil fractions, defined by API)
°C	degree Celsius
°F	degree Fahrenheit
%	per cent
/	per (e.g., tonnes/day)
A	ampere
ACFM	actual cubic feet per minute
AFBC	Atmospheric Fluidized Bed Combustion
API	American Petroleum Institute
ASTM	American Society of Testing Materials
BACT	best available control technology
BFW	boiler feed water
BOD	biological oxygen demand
BPCD	barrels per calendar day
BPSD	barrels per stream day
BS&W	Basic, Sediment and Water
BTX	benzene toluene xylene
Btu	British thermal units
C.F.	characterization factor
CCR	continuous catalyst regeneration
COD	chemical oxygen demand
CV	calorific value (heat of combustion)
DCS	distributed control system
DEA	Diethanolamine
EP	end point
EPA	Environmental Protection Agency (U.S.)
FBP	final boiling point
FCC	fluid catalytic cracking
FGD	flue gas desulfurization
FOE	fuel oil equivalent
G	giga(10^9)
GCV	gross calorific value

GJ	giga joules
HC	hydrocarbons
HDS	hydrodesulfurization
HP	high pressure
Hg	mercury
Hz	hertz
IBP	initial boiling point
IGT	Institute of Gas Technology
ISBL	inside battery limit
J	joule
KRW	Kellogg Rust Westinghouse
LHSV	Liquid Hourly Space Velocity
LP	linear programming/low pressure
Lube	Lubricating
M	mega(10^6)
MEA	Monoethanolamine
MEK	methyl ethyl ketone
MHC	mild hydrocracking
MON	motor octane number
MPa	Megapascal, a unit of pressure
MSW	municipal solid waste
MTBE	methyl tertiary butyl ether
MVA	mega volts ampere
MVAR	mega voltampere reactive
MW	mega watts
NAAQS	National Ambient Air Quality Standards
NCV	net calorific value
NO_x	Oxides of Nitrogen
NPDES	National Pollutant Discharge Elimination System
OSBL	outside battery limit
OVA	Organic Vapor Analyzer
PFBC	Pressurized Fluidized Bed Combustion
PONA	Paraffins, Olefins, Naphthanes and Aromatics
Pa	pascal, a unit of pressure
RCC	reduced crude conversion
RON	research octane number
RTD	Resistance Temperature Detector
RVP	Reid Vapor Pressure
S.R.	Straight Run
SCFD	standard cubic feet per day

SCFH	standard cubic feet per hour
SCFM	standard cubic feet per minute
SG	specific gravity
SO_x	Oxides of sulfur
SRC	solvent refined coal
T	tera (10^{12})
TBP	true boiling point
TDS	total dissolved solids
TEFC	totally enclosed fan cooled
TEL	tetraethyl lead
TOC	total organic carbon
TSS	Total Suspended Solids
UOP K	UOP Characterization Factor
V	volt
VOC	volatile organic compound
WWTP	wastewater treatment plant
WATSON K	Watson Characterization Factor
XP	explosion proof
atm	atmosphere or atmospheres
bar	bar
cP	centipoise
cSt	centistokes
cal	calorie
cm	centimeters
cps	cycles per second
day	day
ft^3	cubic feet
ft	feet or foot
g	gram
gal	gallons
gpm	gallons per minute
h	hour
hp	horse power
in	inch or inches
k	kilo
kA	kiloamperes
kPa	kilo pascal, a unit of pressure
kV	kilovolts
kWh	kilowatt hour
kcal	kilo calories

kcal	kilo calories
kg	kilogram
kg/cm^2	kilogram per square centimeter
lb	pound or pounds
liter	liter or litre
m	meter or metre
max.	maximum
mg	milligram
mi	mile
million	million(10^6)
min	minute
min.	minimum
mm	millimeters
mol	mole
n	normal
ohm	ohm
pH	pH, a measure of acidity or strength of a base.
percent	percent(or %)
phase	phase (electrical)
ppm	parts per million
ppmv	parts per million (volume)
ppmw	parts per million (weight)
ppb	parts per billion
psi	pounds per square inch
psia	pounds per square inch absolute
psig	pounds per square inch gauge
ptb	pounds per thousand barrels of oil
rpm	revolutions per minute
sec	seconds
tonne	metric ton
tonnes	metric tons
vol	volume
wt	weight
y	year

TERMS OF REFERENCE

DESCRIPTION/SPECIFICATIONS/WORK STATEMENT

Component #2: A PETROLEUM REFINERY EFFICIENCY IMPROVEMENT ENERGY CONSERVATION PROGRAM

1. BACKGROUND

The petroleum sectors of Bulgaria, Czechoslovakia, Poland, Romania, and Yugoslavia (as well as that of Hungary) are emerging from a 40-year period of centrally-planned crude supplies and centrally-controlled markets. Practically all of the petroleum refineries in these six countries were built, or modernized, during this period.

Among the five countries, it appears that Bulgaria has three separate refineries having an aggregate throughput of 300,000 B/D; Czechoslovakia has seven aggregating 455,000 B/D; Poland nine with an aggregate throughput of 385,000 B/D; Romania thirteen aggregating 617,000 B/D; and Yugoslavia seven with an aggregate capacity of 609,135 B/D. Now, these refineries face changing circumstances.

First, it is likely that the existing refineries were designed to process a narrow slate of crude oils supplied from the USSR. Now, crude supply options have broadened so that supplies can be bought on the world market through spot and contract purchases. The USSR appears to be phasing out as a primary crude supplier to these countries. Accordingly, potential future crude oil slates can have a much broader range of physical and chemical characteristics than has heretofore been the case.

Second, market conditions for the refinery product slates have been based on the principles of a centrally-planned national economy. Expectations, because of the shift to democratic pluralism in these countries, are for a higher standard of living for the populations, for a greater awareness of the need for environmental protection, and for shifts in refinery-product slates that will occur because of these. The capabilities of the mix of processing units in the refineries in each country to adjust simultaneously to changing crude slates and product slates will be brought into question.

Third, greater public awareness of preserving environmental quality and of the environmental deterioration that has occurred during the past forty years are likely to force major changes in refinery design and operating practices to reduce noxious gaseous, liquid, and solid waste emissions. This awareness is likely to emphasize production of unleaded gasolines and alcohol additives, and perhaps also the exploration of neat alcohol and compressed natural gas alternatives. At the same time, changes in refinery operations will be demanded to reduce noxious emissions to the extent practical.

366

Finally, tightened economic conditions will force refinery managements to improve operations through introducing more efficient internal utilization of energy and through implementing opportunities for energy conservation. These improvements will have to occur while anticipating changing crude and product conditions and with an inventory of processing units in the refineries that in all likelihood has a limited flexibility to adapt to changes. The roles for alternative fuels could emerge here also.

Compounding the problem of managing change are shortages of foreign exchange, increases in foreign exchange demands because of purchase of crude oil supplies on the open market at now greatly increased price levels, and demands on investment capital that will be generated by the political and economic changes in these countries. Foreign investment by international oil companies in petroleum-sector investment opportunities could bring needed foreign exchange and could potentially lead to new refinery construction at strategic locations and the scrapping of some existing refineries.

The complexity of the relationships within the petroleum sector system is somewhat illustrated in Figure 1 of this Appendix.

Obviously, managing the process of change will take some time. The inputs for analysis are not yet completely available. Economic benefits will depend on national policies, formed or as yet unformed. The current crude supply and pricing picture is an unstable one. Foreign investor interest in the five countries probably varies among the countries and perhaps is not yet well focused on the petroleum sector.

Nevertheless, a start in an analysis to improve the situation can be made provided the focus of initial efforts is on a rationalization of the petroleum-system situation in each of the five countries. Rationalization intends (a) efficient, effective, and environmentally-acceptable improvement in the production of petroleum products to serve current domestic markets, (b) adaptation of current operating practices to serve emerging domestic markets from expected, cost-attractive, crude-oil slates, and (c) identification of the improvements in terms of consistency with the privatization policies in each of the five countries.

2. GOAL AND OBJECTIVES

Accordingly, the generic goal of the work is to begin a process that ultimately can lead to such rationalization of the petroleum sectors in each of the five countries. The end results for the work at this time are

a. an organized data base comprising available data and information relevant to producing inputs for later use by others (when sufficient data and information for the

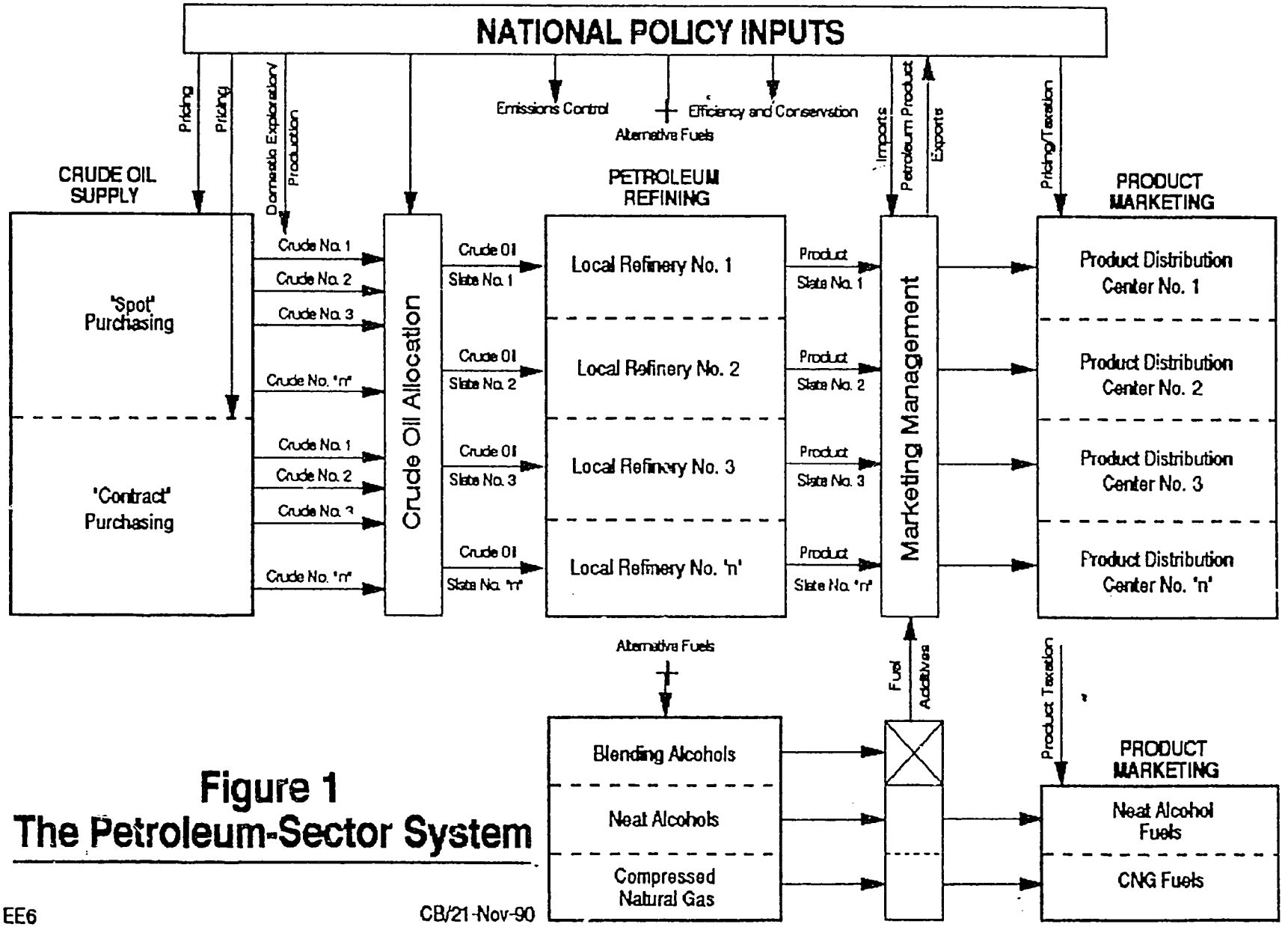

Figure 1
The Petroleum-Sector System

EE6

CB/21-Nov-90

various components of the petroleum system, such as is shown in Figure 1, become available) in a commercial linear programming model to optimize the petroleum system in each country,

b. low-cost improvements in the energy efficiency and environmental impact of selected refineries producing the current product slates that have been implemented during the course of the Contractor's work, and

c. the identification of further improvements which can only be implemented at a later time by others through making a significant investment that needs to be justified.

Accordingly, the objectives of the work focus on the five countries and are

a. for the refinery sector in each country and to the extent that relevant information is available, to describe the process mix in each refinery, the technical capabilities, and current operating practices in a form that (1) provides a data base for undertaking further and future work by others aimed at optimizing the petroleum system in each country and (2) more specifically for the present, enables at least qualitative judgments to be made of effects of changing crude-oil slates on refinery product slates;

b. for a sample of two refineries each in Czechoslovakia, Poland, and Yugoslavia and one refinery each in Bulgaria and Romania, to identify changes in operating practices and low-cost modifications to equipment that can be immediately implemented to increase the efficiency of energy utilization, to conserve energy by avoiding unjustified use, and to reduce as far as practical undesirable gaseous, liquid, and solid effluents;

c. for the same refinery selection in each country, to identify, characterize, and recommend more-extensive changes in practices and equipment and modifications to the process units, which appear justifiable but at the same time require further study possibly with inputs that may not yet be available; and

d. to assist the management of each refinery selected in each country, as needed, in the implementation of the changes identified in b. above through on-the-spot assistance (including training sessions for refinery personnel).

3. APPROACH

This work statement is intended to be generic and applicable in each of the five countries. The intent is to undertake the work with two separate teams of specialized personnel operating in parallel. One team will undertake the work in three countries sequentially and the other in the two remaining countries sequentially. The two teams will be supported as appropriate by a home-office team. The work of the three teams will be coordinated by a program director.

In order to permit pragmatic planning for efficient accomplishment of the work, the first activity will be a reconnaisance in the five countries, probably lasting five weeks, during which needed technical and administrative inputs will be developed and needed local support arranged for. In order to gauge the effectiveness of the work, the final activity will be return visits to the five countries, probably over a two week period when the final reports have been submitted, for the purpose of discussing the results and answering questions that may arise.

The expectations are that considerable data and information will be collected for the countries and for the operating oil refineries. Also, expectations are that this data base, aside from the needs of the Contractor's work program and even after the completion of his work, can provide continuing inputs to other efforts aimed at improving operations in the non-refinery components of the petroleum-sector system (see Figure 1) or to follow-on efforts aimed at implementing the longer-term improvement opportunities identified in the work. Therefore, data and information collection is to be computer oriented with programs organized to be user-friendly and documented accordingly in the Contractor's final reports.

Furthermore, in the identification of improvement opportunities relevant to achieving the objectives of the work, expectations are that benefit/cost estimates will be prepared and/or evaluations performed as far as practical. Estimates and calculations will, with little doubt, require assumptions to fill in for a lack of data. Therefore, estimate preparation and evaluation of opportunities is also to be computer-oriented and user-friendly with programs designed to permit asking "what if" questions, with documentation incorporated in the Contractor's final reports.

Petroleum refineries and petrochemical manufacturing plants are closely linked both physically and through refinery products that become petrochemical feedstocks. The work shall be confined to petroleum refineries only. For this purpose the refinery shall be defined as comprising all

installations that pertain to the receipt of the crude oil through to processing and storage of the refinery's primary products. A primary product shall be defined as one that has been fully processed so as to be marketable. On-site facilities to blend different gasoline streams, produce, and process them to final specifications are refinery units. Refinery gas and/or liquid streams that are delivered to other units for further processing, such as to ethylene, ammonia, or aromatic extraction, are to be considered as finished products.

Equipment purchases (both for test work and for permanent installation) needed for the implementation of short-term improvements shall be defined and justified. A brief report shall be submitted for A.I.D. approval before committing to purchase.

4. TASKS

The following tasks are foreseen for the work.

a. Refinery Characterization

The work is technically oriented. It involves preparing for each refinery in each country, a block flow diagram showing the processing units and the support facilities between receipt of the crude oil slate and the dispatch of the product slate to market. The depth of detail for this characterization will provide

1) a description as far as practical of the capability of each processing unit in terms of feedstocks and feedstock variability and product yields and specifications; of the operating conditions, age, mechanical condition of the processing units; of the consumption of utilities (electricity, water, catalysts, chemicals, etc.); and of the quantities and characteristics of the effluents.

2) a description as far as practical of the support facilities in terms of crude and product storage capacity, fire protection and personnel safety provisions, and methods for segregation, collection, treatment, and disposal of solid, liquid, and gaseous effluents.

3) a written operating history of a refinery for the previous 12-month period emphasizing crude-oil receipts and specifications, product slates produced, unusual operating experiences, routine maintenance performed, and emergencies encountered during operations.

4) a description of the method of electricity supply, whether entirely purchased, self-generated, or a combination of both; and a technical description of the design and operation of the power house (if any) in terms of energy balance and heat rate.

b. Refinery Financial Structure

The objective in this task will be to collect data on local practices from the refinery management and/or from other appropriate sources that can be evaluated to establish the basis whereby the cost of each improvement opportunity can be pragmatically estimated and attractiveness of the opportunity determined. The expectation is that attractiveness will be based in part on (a) the magnitude of the capital requirement, including the foreign exchange component, and (b) the period of time within which the cost of the improvement can be recovered through savings in operating costs achieved. Attractiveness shall refer also to quantification (if practical) of benefits from reduced emissions of objectionable effluents. No need exists to relate emissions for compliance with any existing standards.

c. Selection of the Refineries

The refineries to be subjected to more detailed study, in order to meet Objectives b, c, and d above, shall be selected during the reconnaisance period by mutual agreement between the Contractor and the host-government agency concerned. For Contractor's guidance, the main criterion for selection should be based on achieving a maximum efficiency/environmental improvement impact for a minimum effort and cost in a minimum time frame. However, the selection shall be subject to A.I.D. concurrence.

d. Refinery Housekeeping

For each country and for each selected refinery, the work involves observation over a period of time of the refinery operations in order to detect opportunities to improve operating and maintenance practices, such as by

1) eliminating the presence of leaky valve-stems and steam traps,

2) incrementally insulating excessively hot surfaces,

3) avoiding poor combustion conditions (high oxygen content in chimney gases because of excessive excess air beyond combustion needs and/or leaky furnace settings),

4) avoiding excessive carbon monoxide in chimney gases (poor combustion, inadequate mixing of fuel and air),

5) increasing the frequency with which heat transfer surfaces are cleaned of fouling deposits,

6) reviewing whether rotating machinery is adequately maintained in terms of lubrication and condition of bearings, and

7) reviewing whether plant instrumentation is adequate and/or well-enough maintained to provide accurate readings of operating conditions and is appropriately configured to permit efficient operation.

e. Heat Conservation

The work involves observations over a period of time to evaluate the adequacy of provisions to recover heat that otherwise is wasted. The best example is a lack of airheaters to recover heat from hot chimney gases in refinery furnace equipment. Another example is the design of feedstock preheat heat exchanger trains and the opportunity to introduce an additional heat exchanger that can be justified now because of higher energy prices.

f. Process Unit Operating Conditions

The work involves analyzing the operating conditions and control systems installed for each processing unit in a selected refinery in order to determine whether these are appropriate for the products from the feedstock. This analysis can be particularly significant if current feedstocks and/or product slates have changed from the conditions on which the original design of the processing unit was based.

g. Refinery Energy Balance

The work involves analysis of the flows of energy among the different processing units comprising each selected refinery as well as within the processing units themselves in order to identify opportunities for energy-efficiency improvement in the short term and long term.

The analysis should attempt to provide a data base to assist others to foresee the longer term opportunities for a more efficient energy balance through review of the market demand, future crude oil supplies, and the design and applicability of the processing units themselves. Ultimately, the product of such analysis by others could be decisions to abandon certain units, modify others, or add new units, all providing for greater thermal efficiency.

Accordingly, the Contractor shall attempt to foresee as far as practical the prospect that such future analysis could invalidate the benefits perceived for an identified long-term opportunity from a presumption that a substantial remaining useful life for the process unit exists.

h. Fuel Switching

For each selected refinery, the work shall include comment and expert opinion on the practicality of replacing petroleum hydrocarbon fuels with indigenous coal. Refinery furnaces have in the past been fired with coal. Fuel switching to coal to save on oil imports could be a viable option. However, the Contractor shall focus on a different technical option for coal utilization, in order to reduce investment, by considering high fuel-density, coal/water slurry fuels as a direct replacement for fuel oil with minimum retrofit. Sootblowers could handle the higher ash content.

Consideration of such an option should be limited to assessing its practicality in terms of coal supply and characteristics, the state-of-the-art of fuel formulation, and adaptability to existing combustion equipment.

i. Refinery Emissions

For each selected refinery, the work involves preparing a survey of all solid, liquid, and gaseous refinery effluents in terms of sourcing, probable quantities, and chemical analyses, and suggesting practices to be employed in the refinery for control to reduce such emissions that reflect experiences elsewhere where emission control laws are in effect. There is no need to relate this task to showing compliance of emissions with standards that may be established by the World Bank or the U.S. Environmental Protection Agency.

j. Data Evaluation

The work involves computer-oriented organization of the data and information collected, evaluation of the data and information, compiling cost estimates, performing financial calculations, ranking opportunities in terms of the adopted criteria, and preparing final reports to meet the objectives of the work.