PN-ABN-600

CHARACTERIZATION REPORT
BULGARIAN PETROLEUM REFINING SECTOR

A SECTOR OVERVIEW OF:
CAPABILITY, ENERGY CONSUMPTION, ENVIRONMENTAL IMPACT
MAY, 1992

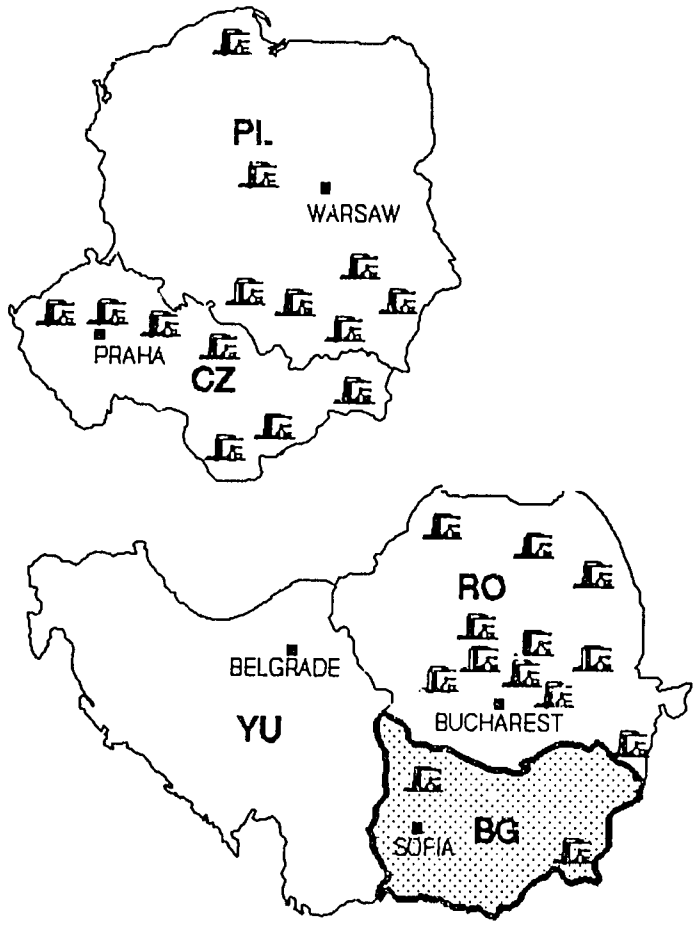

PREPARED BY: DAVY MCKEE CORPORATION, CHICAGO, IL USA
U.S. EMERGENCY ENERGY PROGRAM FOR EASTERN AND CENTRAL EUROPE

U.S. AGENCY FOR INTERNATIONAL DEVELOPMENT
BUREAU FOR EUROPE
WASHINGTON, D.C. 20523

CHARACTERIZATION REPORT
BULGARIAN
PETROLEUM REFINING SECTOR

A SECTOR OVERVIEW OF:
CAPABILITY, ENERGY CONSUMPTION,
ENVIRONMENTAL IMPACT
MAY, 1992

PREPARED BY: DAVY MCKEE CORPORATION, CHICAGO, IL USA
300 SOUTH RIVERSIDE PLAZA
SUITE 1800
CHICAGO, IL 60606
(312) 669-7000

LEAD AUTHOR: NICK ADAMS
PROJECT MANAGER: P.D. AGRAWAL
LEAD / PROCESS: JACK GALLERY

U.S. EMERGENCY ENERGY PROGRAM FOR EASTERN AND CENTRAL EUROPE

U.S. AGENCY FOR INTERNATIONAL DEVELOPMENT
BUREAU FOR EUROPE
OFFICE OF DEVELOPMENT RESOURCES
ENERGY AND INFRASTRUCTURE DIVISION
WASHINGTON, D.C. 20523

USAID CONTRACT EUR-0015-C-00-1011-00

Davy

CHARACTERIZATION OF THE BULGARIAN PETROLEUM REFINERY INDUSTRY

TABLE OF CONTENTS

EXECUTIVE SUMMARY

A. INTRODUCTION

1. OBJECTIVES
2. SUMMARY OF FIELD ACTIVITIES
3. GENERAL DESCRIPTION OF REPORT CONTENTS
4. LIMITATIONS ON USE OF REPORT

B. NATIONAL CONSIDERATIONS

1. OVERVIEW OF NATIONAL PETROLEUM REFINING INDUSTRY
1.1. National Petroleum Refineries
1.2. Crude Sourcing
1.3. Product Slates
1.4. Impact to Industry of Changes in Crudes and / or Products
1.5. Observations of Markets - Internal and External
1.6. Comparisons with International Trends
1.7. General Potential and Opportunities for Improvement
1.8. Observed General Problems and Trends
1.9. Overall Environmental Considerations
1.10. Fuel Switching
1.11. Financial Considerations In Refinery Operations and Capital Projects

2. BASIS FOR SPECIFIC EXCLUSIONS

C. INDIVIDUAL REFINERY DATA

1. NEFTOCHIM REFINERY WORKS - BOURGAS, BULGARIA

1.1. Summary Description of Refinery
1.2. Utilities, Services, Offsites
1.3. Chemicals and Catalysts Use

1.4. Previous 12-month Operating History
1.4.1. Recent Modifications
1.4.2. Crude Oil Supply
1.4.3. Operating Experiences
1.4.4. Impact of Crude Oil Changes
1.4.5. Impact of Product Market Changes
1.4.6. Impact of Legislation and Social Changes

1.5. Environmental Considerations
1.5.1. Quality of Local Environment
1.5.2. Current Emissions Controls

1.6. Refinery Specific Potential and Opportunities for Improvement
1.7. Refinery Specific Problems and Trends
1.8. Methodology of Data Collection
1.9. Reference to Data Base
1.10. Supporting Plant Data

2. PETROCHEMICAL WORKS - PLEVEN, BULGARIA

2.1. Summary Description of Refinery
2.2. Utilities, Services, Offsites
2.3. Chemicals and Catalysts Use

2.4. Previous 12-month Operating History
2.4.1. Recent Modifications
2.4.2. Crude Oil Supply
2.4.3. Operating Experiences
2.4.4. Impact of Crude Oil Changes
2.4.5. Impact of Product Market Changes
2.4.6. Impact of Legislation and Social Changes

2.5. Environmental Considerations
2.5.1. Quality of Local Environment
2.5.2. Current Emissions Controls

2.6. Refinery Specific Potential and Opportunities for Improvement
2.7. Refinery Specific Problems and Trends
2.8. Methodology of Data Collection
2.9. Reference to Data Base
2.10. Supporting Plant Data

D. SUPPORTING TABLES, CHARTS AND FIGURES

APPENDICES

APPENDIX A. SAMPLE REFINERY QUES'

APPENDIX B. PILOT PRIVATIZATION RA

APPENDIX C. ABBREVIATIONS

APPENDIX D. TERMS OF REFERENCE

LIST OF TABLES

Table No.	Title	Page No.
B.1.3.1	MAJOR REFINING CAPACITIES IN BULGARIA	B.3
B.1.3.2	GASOLINE GRADES PRODUCED IN BULGARIA	B.4
C.1.1.1	HISTORY OF NEFTOCHIM REFINERY UNITS	C.1.3
C.1.4.1	NEFTOCHIM CRUDE OIL AND PRODUCT PROPERTIES	C.1.10
C.1.4.2	NEFTOCHIM SHUTDOWNS IN 1990 (Hours)	C.1.11
C.1.4.3	NEFTOCHIM CRUDE DISTILLATION PRODUCTS	C.1.12
C.1.5.1	NEFTOCHIM FACILITY AIR EMISSIONS	C.1.15
C.1.5.2	NEFTOCHIM WASTEWATER EFFLUENT CHARACTERISTICS	C.1.15
C.1.10.1	NEFTOCHIM CRUDE OIL TBP DATA	C.1.28
C.1.10.2	NEFTOCHIM LPG (LIQUIFIED PETROLEUM GAS) SPECIFICATIONS	C.1.29
C.1.10.3	NEFTOCHIM GASOLINE PRODUCT SPECIFICATIONS	C.1.30
C.1.10.4	NEFTOCHIM JET FUEL PRODUCT SPECIFICATIONS	C.1.31
C.1.10.5	NEFTOCHIM DIESEL FUEL PRODUCT SPECIFICATIONS	C.1.32
C.1.10.6	NEFTOCHIM FUEL OIL SPECIFICATIONS	C.1.33
C.2.1.1	START-UP DATES OF REFINING UNITS AT PLAMA (PLEVEN)	C.2.3
C.2.1.2	PLAMA ATMOSPHERIC VACUUM DISTILLATION PRODUCTS	C.2.4
C.2.1.3	PRODUCTS OBTAINED FROM PROCESSING DIFFERENT CRUDE AT PLAMA	C.2.5
C.2.2.1	QUALITY OF DAMMED LAKE WATER AT PLAMA	C.2.7
C.2.2.2	QUALITY OF DRINKING WATER AT PLAMA	C.2.7
C.2.2.3	FUEL GAS DATA AT PLAMA	C.2.9
C.2.2.4	FUEL OIL DATA AT PLAMA	C.2.10
C.2.4.1.	PROPERTIES OF CRUDE OIL USED AT PLAMA	C.2.13
C.2.4.2	PLANNED SHUTDOWN PERIODS FOR 1990 AT PLAMA	C.2.14
C.2.4.3	TOTAL SHUTDOWN TIME IN 1990 AT PLAMA	C.2.15
C.2.4.4	UNPLANNED SHUTDOWNS REPORT FOR 1990 AT PLAMA	C.2.15
C.2.4.5	AVERAGE WEEKLY THROUGHPUT FOR 1990 AT PLAMA	C.2.16
C.2.10.1	TBP DATA FOR LIBYAN CRUDE OIL - SARIR	C.2.24
C.2.10.2	TBP DATA FOR LIBYAN CRUDE OIL - EL BREGA	C.2.25
C.2.10.3	TBP DATA FOR LIBYAN CRUDE OIL - ES SIDER	C.2.26
C.2.10.4	TBP DATA FOR LIBYAN CRUDE OIL - EL ZUETINA	C.2.27
C.2.10.5	GASOLINE PROPERTIES	C.2.28
C.2.10.6	DIESEL FUELS PROPERTIES	C.2.29
C.2.10.7	TECHNICALLY PURIFIED CERESINE PROPERTIES	C.2.30
C.2.10.8	BITUMEN PROPERTIES	C.2.30
C.2.10.9	LUBE OIL SPECIFICATIONS	C.2.31
C.2.10.10	TRANSMISSION FLUID PROPERTIES	C.2.31
C.2.10.11	PROPERTIES OF TRANSFORMER OIL WITH ANTI-OXIDANT	C.2.32
C.2.10.12	TURBINE OIL PROPERTIES	C.2.32

LIST OF FIGURES

Figure No.	Title	Page No.
1	Map of Bulgarian Refinery Locations	B.2
2	Simplified Block Flow Diagram of the Neftochim Refinery	C.1.2
3	Flow Diagram - Neftochim Atmospheric Distillation Unit AD-5	C.1.22
4	Flow Diagram - Neftochim Diesel Hydrotreating Unit - HDS-3	C.1.23
5	Flow Diagram - Neftochim Catalytic Reforming Unit CR-2	C.1.24
6	Flow Diagram - Neftochim FCC Feed Hydrodesulferization	C.1.25
7	Flow Diagram - Neftochim FCC Unit	C.1.26
8	Flow Diagram - FCC Gas Concentration Unit	C.1.27
9	Simplified Block Flow Diagram of the Plama Refinery	C.2.2
10	General Block Flow Diagram of the Plama Refinery Dewaxing Unit	C.2.22
11	General Block Flow diagram of the Plama Refinery Solvent Refining Unit	C.2.23

EXECUTIVE SUMMARY

In 1991, the United States Agency for International Development (USAID) retained the Chicago office of the Davy McKee Corporation (DMC) to perform a technical study of two refineries in the Petroleum Refining Industry of Bulgaria. The results of the study are presented on two levels of reporting: refinery characterization and evaluation of selected refineries.

The award of a contract to DMC was the outcome of meetings in early December of 1990 between the United States and Bulgarian energy officials. During the meetings, a plan and schedule were developed for Bulgaria's participation in the U.S. Emergency Energy Program. The characterization reports being presented for the Bulgarian refineries follow the plan of action agreed upon at these initial meetings.

A refinery characterization report has been produced for two of the Bulgarian refineries. Each report provides a technical description of the refinery and focuses on the feedstocks, feedstock variability, and the yield slate. Data contained in a Questionnaire completed by each refinery has been restructured in an computerized refinery data base, which is the subject of a separate report. Utility data supporting the process operation have been made part of the characterization study as has been the quantity and quality of effluent.

A map representing the geographical location of the two refineries is presented in the Section B. of the main body of the report.

In a separate evaluation report, one of the national refineries, Neftochim, was selected for its potential in achieving substantial improvement in energy efficiency and improvement in the disposal of solid, liquid, and gaseous effluents both by reducing volume and the method of handling these effluents. Capital requirements and the return on investment associated with the identified opportunities form part of the evaluation report.

At the outset of the project, DMC teams were organized for both characterization and evaluation efforts and consisted of professionals with many years of experience in their respective engineering disciplines. The technical disciplines represented within the teams covered the areas of process, environmental, mechanical, electrical, and instrumentation engineering.

The acquisition of the data for preparation of the characterization reports may be considered to be divided into three stages:

> Initially, there was a preliminary, or reconnaissance visit to Bulgaria, at which point a detailed questionnaire was furnished to refinery managers dealing with refinery operations. The questionnaire was designed to acquire most of the data deemed necessary for the preparation of the characterization report.

The second procedural step consisted of an orientation week in Chicago of the DMC teams together with the host country consultants. The team then left Chicago and arrived at Neftochim, the largest refinery in Bulgaria, on July 22, 1991.

The third stage of the characterization effort consisted of visits by the teams to both refineries in Bulgaria. During these visits the completed questionnaires were received and their contents amplified by discussion with refinery operating personnel. The DMC teams and the DMC program management are very appreciative of the effort and cooperation extended by the refinery personnel during the visits and meetings.

The dates of the site visits are indicated within the description of each refinery.

Currently Bulgaria has three (3) operating petroleum refineries. The refineries have downstream processing of crude oil fractions to various marketable products or petrochemical feedstocks. The downstream petrochemical production facilities, including bulk and final products, were excluded from the scope of this study, no data was gathered on them, and they were not included in the refinery visits.

The NEFTOCHIM refinery is part of a petrochemical complex located near the shore of the Black Sea, about twelve kilometers from the Bourgas port. The original installation of the refinery had a design capacity of 2.0 million tonnes per year, and was built in early the 1960's. The new section of the refinery has a capacity of 9.0 million tonnes per year, and was constructed between 1969 and 1974. The refinery management informed the team that following some debottlenecking the refinery can process up to 14.0 million tonnes per year (310 000 BPSD) of Russian export blend crude oil. (DMC team visit - July 22 - 29, 1991)

The PLAMA refinery (formerly known as Petrochemical Works - Pleven) is located about 200 kilometers northeast of Sofia and 30 kilometers south of the border with Romania. The Lube oil section of the refinery was commissioned in the early 1970's. A catalytic reformer was installed in 1979 to produce high octane gasoline. The refinery is capable of processing 1.2 million tonnes per year (26 900 BPSD) of crude oil blends from the USSR, Iraq, Libya, Iran, and Bulgaria. (DMC team visit - 30 July - August 1991)

The third Bulgarian refinery is located at Ruse and was designed to process 100 000 tonnes per year of domestic crude oil. This refinery is rather small, very old, and scheduled to be shut down in near future. At the suggestion of the Bulgarian Ministry of Industry and Trade the Ruse refinery was not included in the study.

Up until 1990, Bulgaria received most of its crude oil from the USSR, with some from Iraq, Libya, Iran, and Algeria. In addition, in the area around Pleven, there are some petroleum deposits amounting to about 100 tonnes per day of crude oil. The quality of this domestic crude oil supply turned out to be way below original expectations. A joint venture with a British company has been formed to further explore possible crude oil deposits in Bulgaria.

In 1990 the crude oil supply to Bulgaria was seriously threatened partly by the Gulf crisis and partly as a consequence of the internal problems developing in the USSR. During 1990, total crude oil processed in Bulgaria was only 8.3 million tonnes in comparison with the total rated capacity of 15.2 million tonnes per year for two refineries.

Due to the above reasons, along with the internal thrust toward privatization and growth of free market economy, Bulgaria has been forced to seek other sources of crude oil. They would like to continue receiving crude oil from the middle East and North Africa.

The Neftochim refinery at Bourgas is strategically located on the Black Sea to receive imported crude oils via tankers. The imported crude oil to the Plama refinery is supplied by railroad from Varna, a port located north of Bourgas, to Pleven. Plama is planning to install a crude oil pipeline between Varna and Pleven.

Neftochim is a fairly complete refinery with a catalytic fluid cracking unit, which the refinery is revamping to maximize high octane gasoline production. At full capacity this refinery can produce up to 7.0 million tonnes of petrochemical feedstock and the whole spectrum of refinery products, including various grades of leaded gasolines, jet fuels, diesel fuels, fuel oils, and bitumen.

The Plama refinery produces various grades of lubricating oils, waxes, and ceresines. A portion of these products are exported. The refinery also produces some leaded gasolines, diesel fuels, kerosene, and white spirits for the domestic market.

The current Bulgarian per capita consumption of the products refined from petroleum is significantly lower than that of the Western European nations. With the growth of privatization and the movement towards a free market economy, the domestic demand for both leaded and unleaded gasoline is expected to grow towards the per capita levels in Western Europe. Similarly, demand for other petroleum products, e.g., jet fuels, diesel fuels, and fuel oils, will increase in 1991 and beyond.

A large portion of the Bulgarian petroleum output is used for petrochemicals. Tetraethyl lead is still used as an octane booster in most of the gasoline produced and the majority of the automobiles in the country are manufactured to operate on leaded gasoline. Most Western European countries provide mainly unleaded gasoline for cars, and a small amount of leaded gasoline for older cars and farm machinery. As the Bulgarian gasoline market approaches the standards and practices of Western Europe, the refineries will change toward higher octane levels and the substitution of MTBE and oxygenates for lead may be anticipated.

The diesel fuel produced currently contains a maximum of 0.15 wt% sulfur. Eventually, the accepted worldwide sulfur content of diesel fuel is expected to be below 0.05 wt%. In addition, the aromatic content of both gasoline and diesel fuel products will have to be reduced to meet the expected regulations and specifications.

The domestic fuel oil market uses two kinds of oils: light fuel oil (similar to ASTM No. 4) which contains almost 2 wt% sulfur and heavy fuel oil (similar to ASTM No. 6) which contains as much as 3 wt% sulfur. The sulfur content of these fuel oils is much higher than the fuel oils normally used in the U.S. As environmental regulations mandate lower sulfur specifications, significant additional hydrodesulfurization capacity will be needed for both diesel and fuel oils.

The refineries cannot keep up with the rapidly changing environmental regulations and in general are not meeting the current regulations. However, they are aware of the problems and are trying to change and revamp waste treatment and disposal facilities. They have set the goal of meeting the current regulations by 1995. Eventually, the Bulgarian regulations are expected to come closer to Western European standards. This means that the refineries should be aiming now toward meeting the ultimate regulations.

The characterization report has attempted to include within its scope the more obvious improvement opportunities identified as a result of the team visit. To meet future demands for gasoline and other fuels with specifications more in line with those found in western countries, Bulgaria will be forced to make changes to its petroleum refineries. Conversion to unleaded motor fuel will require a higher pool octane. Typical processing units required to achieve higher octane are catalytic reformer, alkylation, fluid catalytic cracking, isomerization, and dehydrogeneration. More capacity for gasoline additives will also be required.

Further study is needed to determine the most economically advantageous processing scheme for bottoms from the vacuum unit at the Neftochim refinery. At present, part of the vacuum bottoms are converted to road bitumen. The remainder of the bottoms are blended into refinery fuel oil. Currently, the Plama refinery is not recovering any liquified petroleum gas (LPG) for the domestic market. The production of LPG can be accomplished through revamping and equipment additions.

As concern for the environment grows and wastewater regulations become more severe, additional treatment will be required for effluent water. In a similar way equipment will be required for the reduction of oxides of sulfur and nitrogen discharged to the atmosphere. Most sulfur plants in the refineries are a two stage Claus type with about 95% sulfur recovery. A third stage or tail gas treatment unit is required to achieve about 99% sulfur recovery and thus reduce sulfur oxide discharged to the atmosphere from this source. Some liquid and solid waste problems are being addressed.

The middle management of the Bulgarian refineries are aware of the benefits and general features or aspects of energy saving programs. Some of these are in place and operating. However, the implementation of these programs was stated to generally meet with shortages of financial means and priorities resulting from goals set by top management and possibly the preexisting Federal structure at the Ministry level. For example, process furnace efficiency can be significantly improved and be economically viable by installing an air preheater and more effectively controlling excess air to the burners. Plans for installation of air preheaters on major furnaces together with automatic excess air control have been under consideration at Neftochim. At Pleven, some of the furnaces are already retrofitted with waste heat recovery steam generators.

Another example of significant energy saving with the potential for reduced environmental impact lies in the concept of returning process unit steam condensate to the boiler. The normal condensate should be discarded only if it is contaminated and then only from the contaminating

source. This approach is in contrast to the current practice wherein not more than 20% is actually returned to the boiler and the return systems are not used or properly maintained. A comprehensive study for improved recovery of condensate should include provisions for first class maintenance of steam traps, selective testing of condensate, and diversion of contaminated condensate.

A different type of potential for energy saving which also has a very definite environmental benefit may be found in a program to install a secondary sealing system for floating roof type storage tanks. Here the energy loss represented by the product loss in venting to the atmosphere can be equated to the energy consumed in its production. Conservation of weathered crude components can contribute to the refinery output at relatively low specific energy input.

One of the components of this characterization study is the consideration of substituting coal for hydrocarbons as the source of energy directly in the refinery furnaces. Such course of action does not appear viable. Bulgaria has a very limited supply of coal and furthermore, substitution of coal for hydrocarbons in refinery process furnaces have not been commercialized.

A recapitulation of some of the observations made by the visiting team identified for improvement of operations of the petroleum refineries in Bulgaria is presented in the following remarks.

The Bulgarian refineries were designed to process crude oil from the USSR. The age of the equipment in the process units means that they will have to be evaluated technologically and economically with respect to practices at modern refineries in the west. Adaptation to competitive markets and a changed social structure reinforce the need for this evaluation.

The physical condition of the plant equipment plus an absence of mechanical standards require a large inventory of spare parts to assure continuous operation. With this condition, not always possible due to the financial requirements of inventory management, on - stream time suffers.

The process control strategy and instrumentation need to be modernized with the incorporation of advanced control concepts.

The refinery layouts have been spread over too wide an area to achieve economical equipment locations. While it would be difficult or impossible to correct this, careful consideration should be given to the site planning for a new unit.

The potential economic burden of large maintenance and operating staffs as economic equilibrate toward Western experience, caused by factors noted above, may place the refineries at a disadvantage as compared to their western counterparts.

It is to the advantage of each refinery to study and improve safety practices.

The Neftochim refinery has very limited and environmentally unacceptable underground crude storage facilities. In a time of hard currency shortages for the purchase of crude oil, additional storage capacity should be made available. Suitable instrumentation and equipment is also required for conservation of material during custody transfer and storage.

Acquisition of alternative crude feedstocks will require consideration of the effects on processing units and ancillary facilities. Considerations will include effects on capacity, ability to satisfy product specifications, corrosion protection, and the removal of unwanted components.

It is expected that environmental regulations will become ever more stringent. Unleaded gasoline, low sulfur fuel oils, fuel aromatics reduction, and the control of oxides of sulfur and nitrogen in atmospheric emissions are four examples which will need immediate attention.

The information gathered for the start of a refinery data base information system (based on the questionnaire in Appendix A) has been compiled on a diskette and is the subject of a separate report.

A. INTRODUCTION

1. OBJECTIVES

This report was prepared under the direction of the United States Agency For International Development (USAID), Washington, D.C., ENE/DR/EI, Emergency Energy Program For Eastern and Central Europe, A.I.D. Contract No. EUR-0015-C-00-1011-00, Component Number 2, Petroleum Refining, Characterization. The USAID terms of reference or scope of work may be found in Appendix D.

The objective of this report is to provide data that will serve as a basis for the modernization and optimization of the economic performance of the petroleum refining industry of Bulgaria. It addresses the current status of the petroleum refining industry so that recommendations providing low cost economies to improve energy efficiency and environmental control at each refinery can be prepared. Both short and long term improvement possibilities were established and given to the second round team for detailed evaluation. Following the collection of data on operating variables, equipment and refinery impact on the environment, a data base was prepared reflecting refinery characteristics and is the subject of a separate report.

2. SUMMARY OF FIELD ACTIVITIES

In order to carry out the above objectives, the two of the three refineries in Bulgaria were visited by the characterization team consisting of P.D. Agrawal - Project Manager and Team Leader for Bulgaria, John Gallery - Process Engineer, Dr. Zlatev and Ms. Diakova - Experts from the Bulgarian Ministry of Industry, Trade and Services. The refineries located in Bourgas (Neftochim) and Pleven (Plama) were evaluated in this Characterization Report.

Refinery Name	Location	Dates Visited
Neftochim	Bourgas	22 - 29 July 1991
Plama[1]	Pleven	30 July - 01 August 1991

[1] Previously known as "Petrochemical Works".

The third refinery, a small facility located in Ruse, was not included in the effort. This refinery is expected to shutdown in the near future.

The information needed for the characterization was obtained through the cooperation of the plant personnel by completing a Davy McKee Corp. (DMC) questionnaire (a copy of which is included in Appendix A), followed by meetings and discussions with the DMC characterization team during visits to the individual

refineries. During each visit, a preliminary evaluation of various process units, offsites and utilities was conducted, with particular attention paid to the following:

(a) Feedstocks and their variability
(b) Product yields and specifications
(c) Operating conditions
(d) Mechanical conditions and age of units
(e) Utility consumptions
(f) Effluent character and quantity
(g) Changing environmental restrictions.

Offsites facilities reviewed were:

(a) Storages (crude and product)
(b) Fire protection
(c) Waste Treatment
(d) Effluent disposal

In addition, safety practices were observed to the extent that time permitted.

3. GENERAL DESCRIPTION OF REPORT CONTENTS

This report characterizes the refinery industry in Bulgaria. There are three refineries in the country. DMC's project team visited two of these refineries and collected data, which is summarized in this report. There are subsections covering each refinery in as much detail as possible within the program schedule constraints. This report is divided into five main sections :

A. Introduction
B. National Consideration
C. Individual Refinery Data
D. Supporting Tables, Charts, and Figures
E. Appendices

The section on each refinery includes a description of process units, overall material balance, description of utilities and offsites, operating history and experiences, crude oil supply, environmental considerations, immediate and long range opportunities, etc.. Where data was available, a computerized data base was prepared by DMC.

A "Pilot Privatization Rationalization Strategy Study" was undertaken subsequent to, but in conjunction with, the overall characterization effort. Although this study was assigned to an independent consultant operating under Davy McKee Corp. direction, it is interesting to note that there are no points of disagreement and multiple points of strong reinforcement between the two reports. A copy of this strategy report study is attached as Appendix B.

4. LIMITATIONS ON USE OF REPORT

This characterization report presents an overview of the refinery industry in Bulgaria. It points out various opportunities in the areas of energy efficiency, environmental, operational flexibility, and short and long range improvements and expansions. Although some of the recommendations are applicable to the entire petroleum industry in the country, most recommendations are refinery specific.

B. NATIONAL CONSIDERATIONS

1. OVERVIEW OF NATIONAL PETROLEUM REFINING INDUSTRY

1.1. National Petroleum Refineries

Neftochim, Bourgas:

This is the largest refinery in Bulgaria. It is part of a refining, petrochemical and utilities complex at Bourgas. This refinery has a "nameplate" capacity of 11.0 million tonnes of crude oil annually. However, this refinery is capable of operating at 12.0 million tonnes of annual throughput. Following some minor debottlenecking modifications, this refinery may be capable of processing up to 14.0 million tonnes of crude oil/year (310 000 BPSD) as reported by technical personnel in the refinery management group.

Plama, Pleven:

The second refinery located near Pleven is capable of processing 1.2 million tonnes of crude oil/year (26 900 BPSD).

A map showing the geographical location of the two refineries is presented in Figure 1.

1.2. Crude Sourcing

The Bourgas refinery is strategically located on the Black Sea, with access to the crude oils from the Soviet Union, Middle East and North Africa. The crude oil to Pleven refinery is supplied by railroad between Varna (a port located north of Bourgas) and Pleven.

Until 1990, Bulgaria received most of its crude oil from the USSR, and some from Iraq, Libya and Iran. Due to the close ties with the Soviets, there was no direct effect from the oil crises experienced by Western countries during the early seventies. In 1990, crude oil supply was seriously threatened partly by the Gulf crisis and partly by the internal problems of the Soviet Union. Prior to the Gulf crisis, in addition to the USSR, Bulgaria had a mutual agreements with Iraq, Libya and Iran for importation of crude oil on a barter basis. Due to the above reasons and the internal thrust on privatization and growth of free market economy, Bulgaria is forced into seeking other worldwide sources of crude oil.

Key

Location	Refinery Name	Refinery Capacity Tonnes/yr
1) Bourgas	Neftochim	14.0×10^6
2) Pleven	Plama	1.0×10^6
3) Ruse*		

Showing Approximate Locations of Surveyed Refineries.
* Refinery was not visited.

FIGURE 1

Although the capacity of Bourgas refinery is 14 million tonne/y, during 1990 the supply was limited to about half of this capability. Pleven has a capacity of processing 1.2 million tonnes/y. However, during the year 1990 they processed slightly more than 800 000 tonnes of crude oil, mainly form Libya and Algeria blended with domestic crude. Bulgaria is trying to expiore for domestic petroleum reserve to increase by forming joint ventures with Western European companies.

The imported crude oil supply to Pleven is through railroad, which is not the most economic way. The refinery is in the process of considering a crude oil pipeline from the Black Sea to Pleven.

1.3. Product Slates

Based on information supplied by refinery personnel the following Table B.1.2.1 shows the typical product distribution produced by the two major refineries in Bulgaria, at unit capacities. Note that this is for major refinery products only. Light ends, petrochemical feedstocks, greases, waxes, etc., are not shown.

Table B.1.3.1 - MAJOR REFINING CAPACITIES IN BULGARIA
(million tonnes/y)

	Neftochim	Plama	Total
Crude input	14.00	1.20	15.20
Products			
Gasolines	2.13	0.23	2.36
Jet Fuel	0.39	-	0.39
Diesel fuel	4.66	0.46	5.12
Fuel oils	4.61	-	4.61
Lube oils	-	0.17	0.17
Bitumen	0.24	-	0.24
Unaccounted	1.97	0.34	2.31

The following Table B.1.3.2 shows the grades of gasolines currently produced:

Table B.1.3.2 - GASOLINE GRADES PRODUCED IN BULGARIA

	RON	Lead g/liter
Regular	86	0.15
Special (regular)	93	0.15
Super (premium)	96	0.15

1.4. Impact to Industry of Changes in Crudes and / or Products

The Bulgarian market for both unleaded and super leaded gasolines is expected to grow in 1991 and beyond. Based on the experiences of other Eastern European countries, the demand for diesel fuels and fuel oils will grow as a free market economy becomes more prevalent.

In large western refinery installations, adequate crude oil storage capacity is installed (one to two months supply). This allows crude blending, resulting in a blended crude with properties close to that of the design crude. Use of the blended crude permits smooth operation of the refinery. The Pleven refinery does have over three weeks storage capacity, therefore, they have some storage and blending available for a smooth operation. On the other hand, the Neftochim refinery has a very limited underground crude tankage which is not environmentally acceptable in Western refineries. Therefore, the Neftochim refinery under present set up does not have, in true sense, the required storage and blending capability.

1.5. Observation of Markets - Internal and External

The current per capita consumption of refined products in Bulgaria is significantly lower than that of Western European nations. With the growth of privatization and a free market economy in Bulgaria, gasoline demand can be expected to grow faster than other petroleum products. This would result in a significant increase in pressure on their refining capacity and the product slate.

The Bulgarian crude oil demand will be influenced by the expected increase in demand for refined products and also by the large portion required for petrochemicals production. Petrochemicals are currently exported to provide the hard currency needed to purchase the crude feedstock.

1.6. Comparisons with International Trends

In Bulgaria, tetraethyl lead is still used as an octane booster in most of the gasoline produced. The reason being most cars in the country are manufactured to operate on leaded gasoline. There is a small amount of unleaded gasoline produced for imported cars. The practice in the Western countries is to provide mainly unleaded gasoline for cars, and a small amount of leaded gasoline for older cars and farm machinery.

The diesel fuel produced currently contains about 0.20 to 0.30 wt% sulfur. Eventually, the sulfur content of diesel fuel all over the world is expected to be below 0.05 wt%. In addition, the aromatic contents of both gasolines and diesel fuels will have to be reduced.

The domestic fuel oil market uses two kind of oils. Light fuel oil (similar to ASTM No. 4) contains almost 1 wt% sulfur and heavy fuel oil (similar to ASTM No. 6) contains as much as 3 wt% sulfur. These sulfur contents are much higher than normal fuel oils used in the U.S.A.

Environmentally, in general the refineries are not meeting the current regulations in most areas. However, they are aware of the problems and trying to modify and revamp waste treatment and disposal facilities and working toward the goal of meeting the current regulations by 1995. Eventually, the regulations are expected to come closer to Western European standards. This means that the refineries should be revamping right now toward meeting the ultimate regulations.

1.7. General Potential and Opportunities for Improvement

In order to meet the future demands of gasoline and other fuels, and with product specifications more in line with Western Europe, Bulgaria will have to upgrade and modernize their refineries.

The upgrading would mean adding processing units to produce high octane gasolines without lead. These units are: gasoline reformer for high octane, isomerization, and dehydrogenation units. The refinery will have to upgrade or revamp existing Alkylation, Fluid Catalytic Cracking and MTBE units.

Similarly, additional hydrodesulfurization capacity will be required to meet the expected sulfur and other specifications for the diesel and fuel oils.

Processing of vacuum bottoms at Neftochim needs to be further studied. The bottoms are partly converted into road bitumen, and are partly used as fuel. The refinery will have to investigate various environmentally acceptable processing options for the bottoms.

The lube oil processing plant at Pleven is already being revamped for energy efficiency and product quality improvements. They have to continue with these programs.

Environmentally, in order to meet the future regulations on wastewaters, more treatment equipment will be required. Equipment for SO_x and NO_x control will be required. We believe that most sulfur plants in the refineries are two stage Claus type with about 95% sulfur recovery. A third stage or tail gas treatment unit will be required to achieve about 99% sulfur recovery. There are some liquid and solid waste problems, which are being addressed.

The management of Bulgarian refineries are becoming aware of energy saving programs and some of these are in place. However, the implementation of these programs always met with shortage of financial means and priorities set by top management. For example, the process furnace efficiency can be improved to an optimum level by installing an air preheater and by precisely controlling excess air to the burners, and / or by adding waste heat recovery steam generators. Only a few furnaces at Neftochim are equipped with air preheaters and they have some kind of air control in place. The Pleven refinery is going through an ambitious program of installing waste heat recovery steam generators on major furnaces in the refinery. Many of the furnaces in the Bulgarian refineries are old and of obsolete design. An optimum solution may to replace those furnaces with state-of-the-art type of furnaces with air preheaters or waste heat recovery boilers. Moreover, most burners for the furnaces should be combination type, to be fired with oil or gas or with both. Another example of energy saving is to try to return, as much as possible, the condensate to the boiler. This requires a thorough study and maintenance of the various steam traps. Another potential for energy savings is to install secondary sealing system in storage tanks.

Neftochim is in the process of revamping the control systems to the state-of-the-art distributed control system. The progress is somewhat slow.

They do not use software for maintenance planning and their average turnaround cycles are far shorter than many refineries.

None of the refineries has access to LP models. The Bulgarian Refining Industry as a whole could utilize an LP model for national strategic planning. These days the LP models are used to plan current and future operation of refineries. They also need process simulation programs.

As discussed before, Neftochim has practically nil crude oil storage capacity. In order to assure blending of various crude oils and to streamline the operation, at least one month storage with proper mixing is recommended.

1.8. Observed General Problems and Trends

The Bulgarian refineries were designed to process only Soviet crude oil. The age of the process units means that they will have to be evaluated with respect to practices in the West on modern refineries. Adaptation to competitive markets and a changed social structure reinforces the necessity for this review. The review of the refineries by the team has revealed some shortcomings in operations and technology due primarily to the following:

A) Shorter duration of operating on-stream time due, in part, to equipment conditions and to a shortage of spare parts inventories.

B) Process control strategy and instrumentation which could be modernized.

C) Widely spaced site planning resulting in uneconomical equipment layouts.

D) The large maintenance and operating staffs puts the refineries at a disadvantage with their Western counterparts.

E) Safety practices need improvement.

The lower management and staffs at the refineries are well aware of the opportunities for energy and operational improvement. These considerations, however, have had a low priority with top management.

Observations made by the visiting team for improvement of operations in Bulgaria are:

A) Additional storage capacity is recommended. Improved instrumentation and equipment is required for conservation and control of material during custody transfer and storage inventories to process units.

B) The process units and ancillary equipment may require adaptation to changing crude feedstock properties.

C) Additional processing units and equipment will be required to meet more stringent environmental regulations. Unleaded gasolines, low sulfur fuel oils and air pollution control, in terms of SO_x and NO_x, are three examples of new regulations.

D) The products will have to be more competitive in terms of quality and specifications.

E) The implementation of a computer control system will have to be completed.

F) The crude oil transport to the Pleven refinery by railroad is not the most economic way. A pipeline is recommended.

1.9. Overall Environmental Considerations

Both Neftochim and Plama refineries in Bulgaria have some significant environmental topics to address and solve. The refineries have not met the guidelines set forth in State Decree # 8 regarding environmental emissions. The refinery management staffs appear to be aware of the specific problems that must be addressed environmentally. However, lack of funds and / or significant incentives for achievement of guideline levels have allowed the refiners to operate without solving the environmental emissions problems.

1.10 Fuel Switching

Investigation of Bulgaria's coal supply situation was not undertaken during the Characterization Team visit. At present, it would not appear to be feasible to utilize coal at the refineries for the reasons described below :

Neftochim

Currently, the refinery capability for bottoms processing is limited. Hence, a significant portion of the processed crude (unconverted residual material) is used as fuel oil to fire furnaces and boilers. If coal utilization was considered, Neftochim would have even more residual material to dispose of than at the present time. Additionally, the processing capacity of the refinery is significantly under-utilized. It is difficult to envisage economic justification for modification and / or addition of equipment to incorporate coal utilization at this location.

Plama

The relatively small crude feedstock processing capacity of this refinery would probably make utilization of coal at this location uneconomical. There would be no 'economies-of-scale' in utilization of coal for the very small process units.

1.11 Financial Considerations in Refinery Operations and Capital Projects

Crude Oil Supply

The old crude oil supply system in Bulgaria was based on inter-governmental barter-type agreements with USSR, Libya, Iraq, and Iran. Hard currency was not needed for crude oil acquisition.

Today, under the new system, the crude oil supply from the USSR, Libya, and Iraq, has reduced considerably. Hard currency is required to meet the remaining demand. Based on a contract with a trading company, which Neftochim entered about two years ago, the refinery purchases feedstock for hard currency. A portion of refinery products, such as: gasoline, diesel, and petrochemicals, are

then exported to generate the hard currency needed. The specifications of these exported products are somewhat below the Western European standards. For instance, the octane value of exported gasoline is relatively low and the sulfur content of diesel fuel is relatively high. This results in lower than market prices for the products.

In any case, from a Bulgarian national interest point of view, it is better to import lower priced crude oil to manufacture refined products rather than to import higher priced products.

Products Distribution and Marketing

Within the old system in Bulgaria, the refinery products were produced mainly for the domestic market with some exports. The primary performance criterion was to satisfy the domestic market.

Cost was a secondary consideration. The Petrol - a monopoly distribution and marketing network was established for gasoline, diesel, and fuel oil. Based on a fixed margin, the retail prices were fixed by the state. Until 1989, most petroleum products were consumed domestically and little was exported into markets outside Bulgaria. Generating profit based on tight cost control was not a consideration.

Under the new system with limited hard currency and crude availability, few petroleum products are available to be exported. Most of the refining capabilities are under-utilized. Processing agreements with international companies providing feedstocks and receiving products would generate hard currency.

Future Trends and Refinery Financing

In all of Eastern and Central Europe, due to the movement toward a free market economy, privatization of major industries is underway.

It is planned to convert Neftochim, Plama, and Petrol into private companies. The privatization of these companies will reduce monopolization. Once the process of privatization is completed, the refineries will have to be profit generating companies to stay in business. As mentioned before, the major source of hard currency is the exportation of products. In order to sell the products outside Bulgaria at fair market value, the products will have to meet current and future specifications and standards. A number of projects, involving products purification and refinement, will have to be implemented.

Again at the completion of the privatization process, foreign companies will be able to form joint ventures and thus provide hard currency investments. These foreign joint venture partners would provide feedstocks and market a portion of the products in countries other than Bulgaria. These partners will have to finance the above mentioned projects for product quality improvements.

Other source of financing would be organizations such as the World Bank, the European Community, IMF, and other International Investment Bankers.

2. BASIS FOR SPECIFIC EXCLUSIONS

This Characterization effort was limited to the refineries only. In other words no petrochemical unit within the complex was included. In Bulgaria there are three refineries: Neftochim located at Bourgas, Plama located at Pleven, and Ruse located at Ruse. Only first two were included in this characterization effort as the Bulgarian Ministry of Petroleum advised us that the third refinery at Ruse is on the verge of shutdown. The reason for shutdown is its old age and lack of crude oil.

C. INDIVIDUAL REFINERY DATA

1. NEFTOCHIM REFINERY WORKS - BOURGAS, BULGARIA

This petroleum processing complex is located near the shore of the Black Sea, about 12 kilometers from the Bourgas port.

Address:	Neftochim 8104 Neftochim Bourgas Bulgaria
Telephone:	359 56 24861
Telex:	83506, 83576
Telefax:	359 56 24966
Contact:	H. Hadjikolev

1.1 Summary Description of Refinery

The Neftochim Complex is an enormous facility consisting of a Central Power Generation Plant, Utilities Generation Units, Refinery Process Units, Petrochemical Complex, feedstock/product storage and loading facilities, and other ancillaries associated with a complex of this type. The refinery process units constitute only a fractional portion of this facility. A Block Flow Diagram of the refinery portion of the complex is attached as Figure No. 2.

The crude oil processing "nameplate" capacity of this refinery is 11.0 million tonnes per year. By some reports, the refinery has a capacity of 12.0 million tonnes per year, although with some minor debottlenecking revamps the overall processing capability may have been increased to 14.0 million tonnes per year. The crude feedstock is received by ship at Drouzba (near Bourgas). No crude is received via pipeline. The crude types normally processed in the past were split as follows:

Soviet Export Blend	60 %
Iraqi	20 %
Miscellaneous	20 %

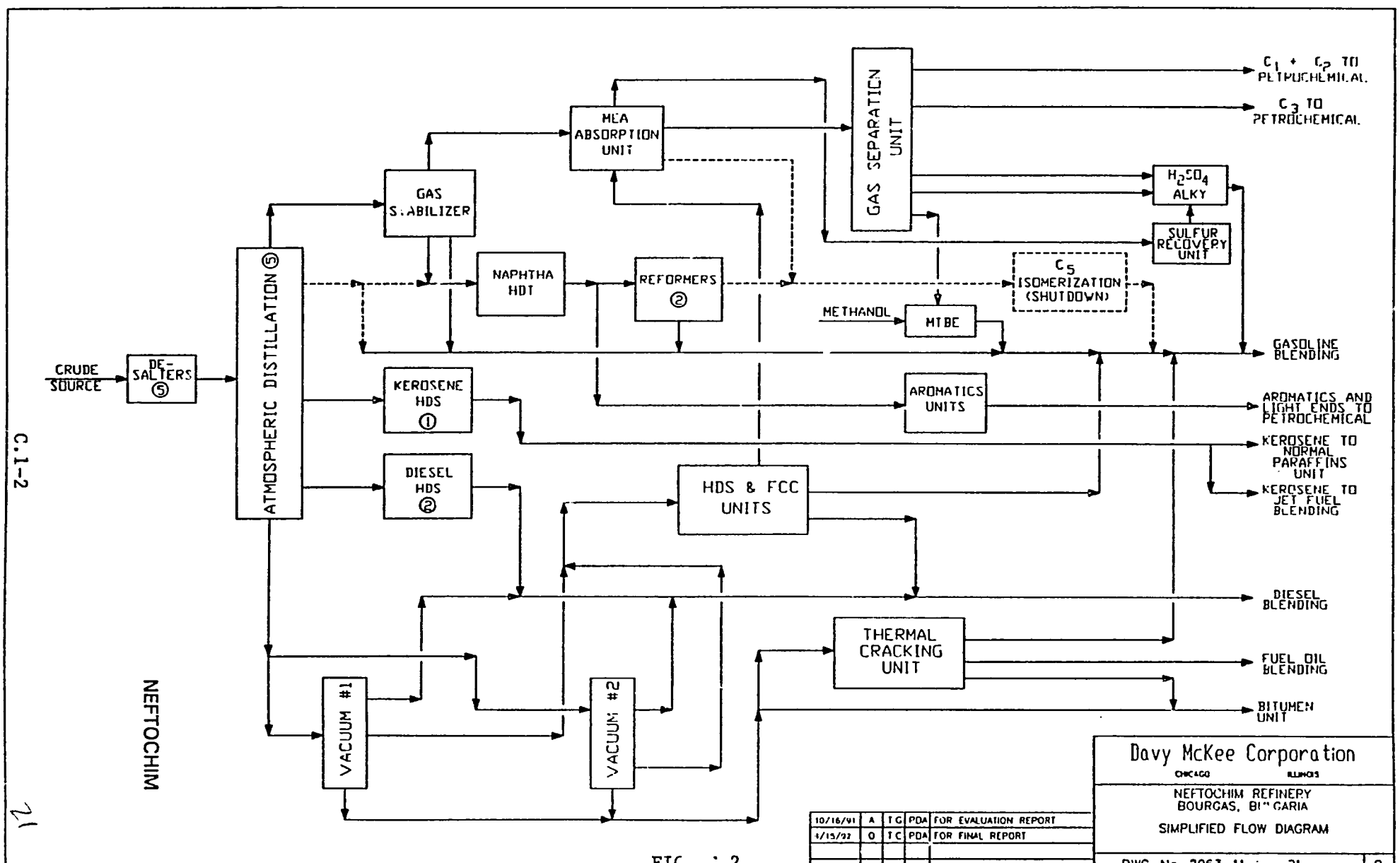

FIG 2

NEFTOCHIM

21

The table C.1.1.1 indicates the various process units in the refinery along with the year installed and the licensor's name.

TABLE C.1.1.1 - HISTORY OF NEFTOCHIM REFINERY UNITS

TITLE	CAPACITY tonnes/y	DATE INSTALLED	CONTRACTOR	LICENSOR
AD-1	1.5×10^6	1963	USSR	USSR
AD-2	1.5×10^6	1963	USSR	USSR
AD-3	3 million	1969	USSR	USSR
AD-4	3 million	1973	USSR	USSR
AD-5	3 million	1974	USSR	USSR
Cat Reforming 1	300 000	1964	USSR	USSR
Cat Reforming 2	300 000	1970	USSR	USSR
Hydrotreating 1	300 000	1964	USSR	USSR
Hydrotreating 2	500 000	1970	USSR	USSR
Hydrotreating 3	600 000	1975	USSR	USSR
Vacuum Distill. 1	1.68 million	1974	USSR	USSR
Vacuum Distill. 2	2 million	1982	USSR	USSR
FCC	1.5 million	1982	USSR	USSR
Visbreaking (Thermal cracking)	1.5 million	1982	USSR	USSR
Alkylation	215 000	1982	USSR	USSR
H_2SO_4	280 000	1983	USSR	USSR
Gas Fractionation	280 000	1983	USSR	USSR
MTBE	80 000	1988	Bulgaria	Huels
Merox	-	1991	-	UOP

The table C.1.1.2 shows the overall material balance as reported by the refinery management for the year 1990.

C.1.1.2 - OVERALL MATERIAL BALANCE (1990)

	TONNES/YEAR	%
INPUTS		
CRUDE OIL	7 355 000	99.45
METHANOL	41 000	0.55
SUBTOTAL	7 396 000	100.00
OUTPUTS		
GAS	15 000	0.20
LPG	77 000	1.04
VIRGIN NAPHTHA	834 000	11.28
AUTOMOTIVE GASOLINES	1 126 000	15.22
JET FUEL	203 000	2.74
MOTOR DIESEL FUEL	1 658 000	22.42
INDUSTRIAL DIESEL FUEL	803 000	10.86
FUEL OIL	2 434 000	32.92
MARINE OIL	75 000	1.01
LIQUID PARAFFINS	24 000	0.32
BITUMEN	128 000	1.73
SULFUR	14 000	0.19
LOSSES *	5 000	0.07
SUBTOTAL	7 396 000	100.00

* Typical losses are reported to be around 1.0%.

The major refinery processing units are described below:

Crude distillation units

There are five (5) atmospheric distillation units, each with their own desalters, crude heat exchanger trains, fired heaters, strippers, and associated equipment. Recent operations have primarily utilized the newest units (AD-4 & AD-5) since insufficient crude supplies have been available to permit continuous operation of the other distillation units. Atmospheric Distillation Units AD-4 & AD-5 include naphtha stripping and naphtha splitting columns. The light naphtha is routed directly to gasoline blending; the heavy naphtha is further processed in the catalytic reforming units.

The complex also contains two vacuum distillation units processing the atmospheric residue and providing feeds to the Thermal Cracking, Fluid Catalytic Cracking, and Bitumen Units.

Light ends processing units

Included in this category are the Gas Desulfurization (with MEA washing), and Gas Separation Units. The light gases produced in the various process units are initially desulfurized and subsequently fractionated to produce a variety of petrochemical feedstocks (C1,C2, and C3) and feeds to the Sulfuric Acid Alkylation and MTBE Units.

The sour H_2S containing gases from the Gas Desulfurization unit constitute the feed to the Sulfur Recovery Unit.

Naphtha processing

The majority of the straight-run light naphtha product separated in the Atmospheric Distillation Units is sent directly to the gasoline pool. A portion of this material may be processed in the Light Naphtha Isomerization Unit, but this unit was shutdown during the period of the team visit. A small portion of the straight-run naphtha is sent to the petrochemical plant.

The heavy naphtha fraction is hydrotreated in two Naphtha Hydrotreating Units. The resulting material is then further octane upgraded in the two semi-regen. Catalytic Reforming Units within the refinery. A portion of the hydrotreated naphtha is sent to the Petrochemical Section of the Complex for further processing to specialty chemicals.

Distillate processing

There are three distillate hydrotreating units within the refinery - one processes the jet fuel / kerosene fractions and the other two process the diesel fractions from the atmospheric distillation units.

Gas oil conversion

The vacuum gas oil (VGO) fractions separated in the vacuum distillation units are routed through the hydrodesulfurization (HDS) / Fluid Catalytic Cracking Units for upgrading to more valuable end products. The VGO feedstock to the FCC Unit is pretreated in a HDS unit immediately upstream of the FCCU. This HDS unit treatment improves the feed properties to the FCC Unit such that better overall yields and product properties result. The Fluid Catalytic Cracking Unit appears to be the most important process unit within the refinery as it is by far the largest gasoline producer. It is capable of producing 90+ octane gasoline at a yield of over 50 percent. The FCC Unit light gas byproduct is eventually processed in the Sulfuric Acid Alkylation Unit.

Residual processing units

A visbreaking unit (thermal cracker) is utilized to upgrade the residual material separated in the Vacuum Fractionation Units. The cracked fractions are routed to gasoline, kerosene, diesel, and fuel oil storage as applicable. The heaviest material is further processed in the Bitumen Unit to produce an asphaltic product.

Hydrogen production unit

A single Hydrogen Production Unit is operational on the refinery site. This unit presumably provides the high purity hydrogen requirements for some of the petrochemical process units.

Sulfur recovery unit

One Claus-type Sulfur Recovery Unit is on the premises.

1.2. Utilities, Services, Offsites

Water systems

The refinery process raw water is obtained from a man-made lake, Lake Manda, about 7 kilometers from the refinery. The wastewater after treatment is returned below the dam and discharges into the Bay of Bourgas. Drinking and sanitary water (116 cubic meters/h) comes from the City of Bourgas' water facilities. Total water use in the complex is about 8 000 cubic meters/h:

Boiler Feed Water	1 300 cubic meters/h
Cooling Tower	5 000 cubic meters/h
Process Water (softened)	500 cubic meters/h
Wash Water, Fire Water and Losses	1 200 cubic meters/h

The refinery utilizes a circulating cooling water system. The cooling towers are equipped with wooden packing that is in poor condition. The refinery is considering replacement of the packing with polypropylene grids. At the time of the evaluation, the cooling towers were not operating efficiently.

Electric power

The plant obtains electricity from two independent sources:

(1) Bourgas substation is connected through two 110 kV overhead lines. This substation is connected to the 400 Kv State Electric Power System. This substation is connected to the plant and on Neftochim plant property.

(2) Thermal Power Station (TEZ) owned by Neftochim provided by six generators driven by steam turbines.

Electric power distribution within the refinery is as follows:

Motors 200 Kw and above are supplied at 6000 Volts/ 3 phase/ 50 Hz.

Motors up to 200 Kw are supplied at 380 Volts/ 3 phase/ 50 Hz systems.

Lighting is 220 Volts/ single phase/ 50 Hz. Dangerous area lighting is 12, 24 or 36 volts. Emergency lighting (DC) is from storage batteries.

Instrumentation and repair tools use 220 Volts / single phase.

Steam system

Steam for the entire refinery and petrochemical complex is generated in a Central Power Station and routed to all process consumers. A total of 11 Soviet designed and built boilers produce steam at pressure levels of 140 and 100 bars. This steam is let down through the turbo-generators to produce 40, 20, 15, and 10 bar steam for distribution. Steam is also available at the units at 1.5 and 0.6 bars. Only about 20% of the steam from the generating source is returned to the to the power station.

Fuel system

In general the fuel used to fire the refinery heaters is a combination of gas and oil. The fuel gas is a mixture of light refinery process gases and imported natural gas. The blend averages about: 19% H_2, 73.8% CH_4, the remainder C_2+.

The fuel oil is predominantly the unconverted heavy material processed in the refinery and has a sulfur content that varies between 1.0 and 3.5%.

Instrument and plant air

The instrument and plant air are available at a pressure of 4.0 kg/cm^{2}g.

The dew point of instrument air is -25 °C (summer) and -35 °C (winter).

Inert gas

Nitrogen is supplied at a purity of 99.9% produced by an on-site air liquefaction unit.

Storage tanks

A complete assessment and inventory of the tankage situation at this refinery / petrochemical complex was not undertaken. It was noted that the crude storage available on the plant site was as underground tanks. Based upon the refinery rated processing capacity of 14 million tonnes per annum of crude feed, the crude tanks afford less than 7 days storage capacity. The crude storage tanks were not equipped with mixers. Unfortunately, the refiner was having such difficulty obtaining crude supplies that at times the feedstock to the refinery was offloaded from ships and sent directly to the atmospheric distillation columns. Most, if not all, of the tankage appeared to be unblanketed. It was stated that the refinery had no installations of secondary sealing. The condition of the tankage is unknown.

Flare and knockout system

The primary refinery flare stack is 47 meters high and has a burner tip diameter of 800 mm. The flare knockout drum is sized at 30 cubic meters.

Fire fighting system

The refinery utilizes a common fire water system for all the process units. The header pressure is approximately 4.5 barg. Emergency firewater pumps can raise the header pressure to 10 barg. Hydrants and jet sprays are distributed throughout the process areas.

1.3 Chemicals and Catalysts Use

The information was provided by the refinery. However, it is not reported here, since the refinery management considers the catalysts and chemicals consumption to be confidential.

1.4 Previous 12-month Operating History

1.4.1 Recent Modifications

The refinery is in the process of revamping the FCC Unit to maximize production of high octane gasoline production.

1.4.2 Crude Oil Supply

In the recent past, the two primary crude oil suppliers were the Soviets (over 60 %) and the Iraqis (approximately 20 %). Iranians and other Middle Eastern entities contributed to the balance of the supply. Political, social, and/or economic problems related to the two primary suppliers have left the Bulgarians in an extremely vulnerable position with respect to obtaining sufficient crude to efficiently operate the refinery and petrochemical complex. At the time of the evaluation, the refinery complex was operating significantly below its rated capacity (approx. 33 % of rated throughput). Several of the process units were shutdown, and most of the others were operated at significant turndown ratios.

The typical properties of various crude oils and the distribution and key properties of products derived from them are shown in Table C.1.4.1.

TABLE C.1.4.1

NEFTOCHIM CRUDE OIL AND PRODUCT PROPERTIES

Crude Name Source (Country)		URAL (Sea) USSR	IRANIAN HEAVY	IRANIAN LIGHT
Crude Feedstock				
	API Gravity	33.5	31.5	33.8
	Sulfur, Wt. %	1.18	1.75	1.46
	Pour Point, °F	-9	-12	-15
	Viscosity, Cst at 130°F	5.89	8.2	5.71
C4- Fraction	Yield, Vol. %	2.5	2.1	2.4
Gasoline	C5-70 °C			
	Yield, Vol. %	7.6	4.6	5.8
	API Gravity	85.9	81.9	81.9
	Sulfur, ppmw	200	500	250
	Octane, F-1, 1.5 ml TEL	69	79.2	79.2
Naphtha	75-170 °C			
	Yield, Vol. %	18.2	16.3	17.4
	API Gravity	56.2	57.7	57.4
	Sulfur, ppmw	1424	997	445
Kerosine	170-230 °C			
	Yield, Vol. %	12.7	10.4	10.7
	API Gravity	46.7	45.2	49.5
	Sulfur, Wt. %	0.23	0.32	0.12
Light Gas Oil	230-300 °C			
	Yield, Vol. %	13.2	12.1	12.7
	API Gravity	38.2	37.0	37.4
	Sulfur, Wt. %	0.55	0.73	0.41
	Viscosity, Cst at 50°C	3.59	7.40	4.20
Vacuum Gas Oil				
	Yield, Vol%	20.3	13.1	15.7
Heavy Gas Oil	300-315 °C			
	Yield, Vol. %	12.8	11.4	10.0
	API Gravity	30.6	30.6	31.3
	Sulfur, Wt. %	1.43	1.74	1.28
	Visc. @ 50 °C	6.98	7.40	6.34
	Cloud point °C	10	7	11
	Cetane Index	59.5	54.6	61.9
Vacuum Residue				
	Yield, Vol %	12.7	30.0	24.3
	API Gravity	11	10.6	10.7
	Sulfur, Wt. %	3.66	3.41	2.71
	Visc. 100 °C	144.1	221.4	149.1
	Vanadium, ppmw	16	226	12.4
	Asphaltene, ppmw	0.4	4.0	2.5

NEFTOCHIM

29

1.4.3. Operating Experiences

During the DMC team visit, the thermalcracker was shutdown for maintenance. The Light Naphtha Isomerization Unit and the FCCU Waste Heat Recovery System (CO Boiler) were also shutdown.

Due to shortage in crude oil supply only two of the five Atmospheric Distillation Units were operating. One of the Naphtha Reforming Units and one of the Distillate Hydrotreaters were also shutdown. During the year 1990 only 7.4 million tonnes of crude oil were processed. This is just over 50% of the rated capacity of the refinery. Initial projections indicate that the total crude processed in 1991 would approximate 5.0 million tonnes.

Tables C.1.4.2. lists scheduled and unscheduled down time for each unit in the refinery in 1990.

NEFTOCHIM OPERATING UNIT
TABLE 1.4.2 - SHUTDOWNS IN 1990 (Hours)

UNIT	TOTAL DOWN TIME	SCHEDULED SHUTDOWN			NON-SCHEDULED SHUTDOWNS	
		Planned	Actual	Feedstock Shortage	Chemicals	Other
AD-1	3 913	720	720	3 193	-	-
AD-2	4 096	720	874	3 170	-	52
AD-3	4304	720	624	3 368	-	-
AD-4	1 114	720	862	252	-	-
AD-5	2 263		2 263		-	-
HD-1	4 284	576		3 404	880	-
HD-2	2 006	576	514	1 092	-	400
HD-3	2 977	576	816	1 976	185	-
CR-1	2 943	720	576	2 376	-	-
CR-2	4 744	624	1 632	2 208	44	-
HYDROGEN	788	768	792	470	44	-
Vacuum Dist.	1 306	768	816	494	136	-
FCC	812	768	792		20	-

There were no shutdowns attributed by the plant reports to problems arising in electrical, steam, cooling water, plant or instrument air supplies, or to any incidents within the process units.

1.4.4. Impact of Crude Oil Changes

Design vs. actual crude distillation products are presented below in Table 1.4.3.

TABLE C.1.4.3 - NEFTOCHIM CRUDE DISTILLATION PRODUCTS

Product	Design wt %	1989 (Actual) wt %	1990 (Actual) wt %	1991 (Projected) wt %
Light Gases	1.7	2.6	2.2	2.0
Naphtha	17.0	15.5	14.3	15.5
Kerosene	17.0	6.0	3.5	2.7
Gas Oils	18.5	30.2	29.4	27.1
Resid	44.8	45.1	49.3	50.6
Losses	1.0	0.6	1.3	2.0

From the above table it is apparent that the crude feedstock to the refinery complex has become progressively heavier over the past several years. The crudes that are currently processed also contain higher concentrations of sulfur. They are significantly heavier than the design parameters of the Atmospheric Distillation Units and presumably, the downstream processing units. The higher atmospheric gas oil plus resid concentrations (compared to the design values) could conceivably bottleneck the processing capacities of the lower sections of the atmospheric distillation columns and the units designed to process the heavy crude oil fractions (e.g. Vacuum Distillation, Thermal Cracking, FCC, Diesel Hydrotreating, and Bitumen Units). The higher feedstock sulfur concentration could affect the operation of the Sulfur Recovery Unit. Additionally, it is possible that the current sulfur concentrations could adversely impact the metallurgy of the bottoms processing units. The higher than design sulfur concentrations could result in unacceptable corrosion rates.

The best way to evaluate the processing impact of new feedstocks and/or operating conditions on an existing crude unit is to simulate the unit under existing operating conditions and establish capacities, limitations and bottlenecks to the actual equipment. Then through further simulation, the expected operating conditions, products rate, pumparound duties, flash zone conditions, crude heater duty, crude column tray loadings, and capacities of the downstream process units and/or equipment can be determined. All this is readily done by using currently available process simulation software and appropriate high speed computers.

1.4.5 Impact of Product Market Changes

At present, the refinery production is oriented only toward the domestic market. Some of the petrochemical products do compete in the foreign market. Any future development of a free market economy and potential privatization the refinery will have a profound impact on the operation of this complex. Refinery products will have to compete with imported products, both in terms of quality and value.

It is expected that increased production of a higher octane gasoline product will become necessary. Additionally, lead phase-down and benzene reduction in gasoline will eventually become a reality. Neftochim currently is not in a position to produce significant quantities of high octane gasoline.

Changes to the diesel fuel product market may dictate similar product property improvements. Reduction in aromatics and sulfur concentrations are to be expected. Of these, sulfur is probably the most severe and first likely to receive attention. Aromatics will certainly follow but initially could be expected to impact primarily on the "external" salability of the Bulgarian products. This could severely impact the Distillate Hydrotreating Unit capabilities as the most recently processed feedstocks contain higher sulfur concentrations than the units were designed for.

1.4.6. Impact of Legislation and Social Changes

The potential legislated and social changes could profoundly affect the operation and/or competitive position of this refinery both in the immediate and longer term future. Legislated changes could include:

1. Initially reduction and eventually complete elimination of lead additives to improve octane ratings of the gasoline pool.
2. Reduction of aromatics concentration of the gasoline pool.
3. Reduction of both sulfur and aromatics allowed in the diesel fuel product.

4. Environmental pollutant reductions to prescribed limits. These could be either concentration of total mass over a time period with a peak rate. These would include volatile organic compounds (VOC's), sulfur, and particulates to the air, along with specific toxic materials in the refinery water system.
5. Groundwater testing around the refinery and petrochemical complex to monitor any potential toxic emissions to the water table.

Given the condition of the refinery waste collection and treatment systems, it is almost certain that significant capital expenditures will be necessary to bring the refinery into compliance with future local regulations noted above. The only question unanswered to date and also in this report is how large will the investment need to be and how long a time is available for improvement.

Potential social changes could include:

1. Bulgarian movement to a free market economy.
2. Privatization of the state-owned refining industry.
3. Increased domestic consumption of petroleum products in line with other European countries (particularly gasoline).

Legislated and social changes to the refining industry are potentially the most serious problems that the Bulgarians could face.

1.5 Environmental Considerations

1.5.1. Quality of Local Environment

Air emissions

The refinery has developed the following preliminary estimate of the facility emissions.

Table C.1.5.1
NEFTOCHIM FACILITY AIR EMISSIONS

Emission	tonnes/y
Hydrogen Sulfide	200
Carbon Monoxide	13 000
NO_x	6 000
SO_x	38 000
Hydrocarbons: Saturated	186 600
Unsaturated	37 000
Aromatic	7 000
Miscellaneous	6 000

By 1995, the plant plans to reduce the above air emissions by 40-50 %. The relatively flat land adjacent to the Black Sea allows for good ventilation due to the normal air velocity changes. In certain meteorological conditions, the refinery air emissions flow toward populated areas and have caused complaints.

Water quality

Currently, the treated wastewater from the refinery does not meet the standards set forth in the state Decree No. 8, as shown in Table C.1.5.2 below:

Table C.1.5.2
NEFTOCHIM WASTEWATER EFFLUENT CHARACTERISTICS

Property	No. 8 Stds.	WWTP Outlet	3rd Lake Outlet
BOD, mg/liter	< 5	150 - 400	60 - 70
COD, mg/liter	< 25	300 - 800	170 - 300
Oil, mg/liter	< .05	20 - 50	5 - 12
Ph	6 - 9	7 - 9	6.5 - 7.5
Total Suspended Solids, mg/liter	N.A.	40 - 60	25 - 40

The wastewater, after partial treatment, discharges through a marshlands area. With the additional treatment afforded through the wetlands and the multiple outlets from the wetlands, the impact of the refinery effluent is not causing significant environmental problems.

During the time of the environmental audit of the refinery, it was publicly announced that bathers could not swim at the Bourgas public beaches due to the bacterial count in the water. The source of the high bacteria count was not stated.

Solid wastes

The plant has two separate solid waste systems. The first is the normal solid waste generated by the production facilities in terms of scrap paper, wood, construction debris and office material. This material is presumably sent to landfill disposal.

The second solid waste system - the oily sludge disposal system - presents the more pressing solid waste problem. At the time of the evaluation, the oily sludge was simply being stored in various tanks and basins throughout the facility. The oily sludge volume is estimated to be about 400 000 cubic meters.

1.5.2. Current Emissions Controls

There are no specific air pollution control standards currently in effect. It is anticipated that future local regulations will force the plant to control the SO_2, particulate, and volatile organic emissions within the next few years.

As stated in section I.5.1., the wastewater quality as it leaves the final clarifier or the third lagoon does not meet the Decree #8 standards. The Wastewater Treatment Plant basic design as originally installed has the potential to meet the standards. Two actions are required to achieve compliance, namely: (1) stop the uncontrolled oil loss to the sewer system, and (2) repair and/or replace the non-functional components of the major wastewater treatment units.

The disposal of hazardous solid wastes are currently uncontrolled. A new rotary kiln incinerator system has been installed was undergoing shakedown during the time of the evaluation. This system may prove satisfactory for the volume reduction of the hazardous oily sludges. The fly ash will have to be handled as a potential hazardous waste.

1.6. Refinery Specific Potential and Opportunities for Improvement

Energy Efficiency Improvements

Energy conservation program

Neftochim must develop and implement a comprehensive energy program. Currently a variety of refinery and petrochemical products are produced with little regard for the energy expenditures involved.

Steam balance

The steam balance can be improved by maximizing the condensate returned to the boiler. This requires maintenance and proper selection of the steam traps, in-line analysis, and polishing of the condensate.

Fired heater efficiencies

It is estimated that most of the refinery furnaces are operating at less than 60 % combustion efficiency. Installation of air preheaters, automatic control of combustion air, or convection section heat recovery (in the form of steam generation, process fractionator reboiling or preheating, or Hot Oil circulation) could improve the efficiency to over 90 %.

It is likely that new combination burners may be necessary. In some extreme cases replacement of furnaces may be required.

Atmospheric distillation units

The crude units at Bourgas are designed with only one pumparound. For more energy efficient operation a top pumparound should be considered. This would probably mean addition of heat transfer surface to the crude exchange train.

Amine acid gas removal units

The refinery amine units operate with a 15 wt% MEA solution. Currently, many refinery MEA units are able to operate with an amine solution of approximately 30 wt%. However, in order to control degradation of solution, a large activated carbon filter is required. The higher solution concentration could reduce the current energy consumption to about one half.

Fluid catalytic cracking

Currently the CO boiler (waste heat recovery from regenerator gas) is not in operation. The reason for the shutdown is not known. The refinery management could consider addition of a power recovery unit to the FCC Unit, which would improve its energy efficiency.

Operational Improvements

Computer software and hardware

Neftochim can certainly use both process simulation and LP model software. The simulation programs will help them in predicting the crude and vacuum unit operation with crude oils other than the crude oil being processed currently. It can predict the flash zone conditions, draw off temperatures, and pumparound duties. The program can also optimize the crude exchange train thereby contributing to overall refinery energy savings.

LP models are used for planning future operations with different feedstocks. One of the primary functions of the LP models is to conduct profit analysis.

Bourgas can also use a PC based maintenance planning and spare parts inventory program.

Vacuum unit

Consider replacing vacuum column internals with Structured Packing (Sulzer Mellapakor equal). This packing could result in lower pressure drop, better product separation, and higher capacity.

Additionally, consider the use of the Liquid Ring Vacuum pumps. These pumps are more efficient than steam ejectors. Environmentally, the vacuum pumps eliminate the problems associated with disposal of the hydrocarbon-water mixture that result from the use of traditional steam ejectors.

Alkylation unit

Neftochim operates a Sulfuric Acid Alkylation Unit. Recent designs of units of this type have been optimized in comparison to HF Alkylation Units. If not currently practiced, the spent sulfuric acid from the unit should be concentrated and recycled.

Bottoms processing

Currently, a portion of the vacuum bottoms is thermally cracked and the remainder is converted into bitumen. The refinery has had operating problems with the Thermal Cracking Unit, the quality of bitumen is not very good, and there is not a market for the bitumen produced. Neftochim is having difficulty in disposing of the excessive residual material produced in the refinery.

Following are some of the options for dealing with the bottoms material:

- Burn the bottoms in existing boilers and desulfurize the flue gas.
- Partially oxidize the bottoms, clean up the gas and generate power. Consider using a gas turbine with concurrent electrical power and steam generation.

Environmental Impact Reduction

Gasoline reformulation

Management of the Neftochim refinery is already considering installation of a new Catalytic Reforming Unit (with Continuous Catalyst Regeneration). Considering the potential future European octane requirements, this appears to be a necessary step to become a competitively operating refinery.

Light naphtha isomerization

The existing semi-regen catalytic reformers that would be replaced by the addition of a new CCR Reforming Unit could be converted into a Isomerization Units to further improve the gasoline pool product properties.

Secondary sealing of tanks

Proper sealing of storage tankage reduces product losses, alleviates maintenance requirements associated with preheat exchanger fouling caused by oxygenated compounds, and is a good idea environmentally.

Environmental controls

To bring the refining into compliance with reasonable environmental standards the following actions should be taken;

- Reduce the amount of oil lost to the various sewers.
- Determine source of excess sand in the sewer systems.
- Identify and remove the cross-connections between separate sewer systems.
- Remove and treat all the accumulated oily sludge.
- Revamp and repair the Wastewater Treatment Plant.
- Use alternate fuels or add on flue gas controls.
- Initiate a program of volatile organic compound emission control.

1.7. Refinery Specific Problems and Trends

The general problem that the Neftochim refinery faces is that it must adapt to competitive markets and changing social and economic conditions in Bulgaria, and for that matter - Europe. In this context, many specific problems must be addressed and solved. Some of these specific problems are discussed in section C.1.6 and some prospective solutions are offered. Further detailed feasibility evaluations are recommended and priorities must be set based on the refiner's financial situation.

1.8. Methodology of Data Collection

The purpose of the characterization report is to describe the operation of the Neftochim refinery as of July 1991, and to point out concerns regarding energy efficiency, environmental impact, and operational flexibility. A questionnaire to address the above mentioned points was prepared and sent to the refinery about a month before of the project team's arrival at the site.

During the visit to the refinery, it was apparent from the submittals of completed forms and from the material assembled that Neftochim had put in considerable effort and completed most of the questionnaire in a professional manner. The completed questionnaire furnished the basis for much of the data gathered by the Davy McKee team during their stay at the refinery.

1.9. Evaluation of Results Achieved by / for Data Base

Data gathered in the field, pertinent parts of which are included in a separate report, have been applied to the formation of a computerized data base.

1.10. Supporting Plant Data

The specifications of crude oil and various products are indicated in the following tables:

C.1.10.1	CRUDE OIL TBP DATA
C.1.10.2	LPG (LIQUIFIED PETROLEUM GAS) SPECIFICATIONS
C.1.10.3	GASOLINE PRODUCT SPECIFICATIONS
C.1.10.4	JET FUEL PRODUCT SPECIFICATIONS
C.1.10.5	DIESEL FUEL PRODUCT SPECIFICATIONS
C.1.10.6	FUEL OIL SPECIFICATIONS

Process block flow diagrams

Figures 3 through 8 depict the flow schemes of the major refinery units.

FIGURE 3	Simplified Process Flow Diagram Atmospheric Distillation Unit AD-5
FIGURE 4	Simplified Process Flow Diagram Diesel Hydrotreating Unit HDS-3
FIGURE 5	Simplified Process Flow Diagram Catalytic Reforming Unit CR-2
FIGURE 6	Simplified Process Flow Diagram
FIGURE 7	Simplified Process Flow Diagram FCC Unit
FIGURE 8	Simplified Process Flow Diagram FCC Gas Concentration Unit

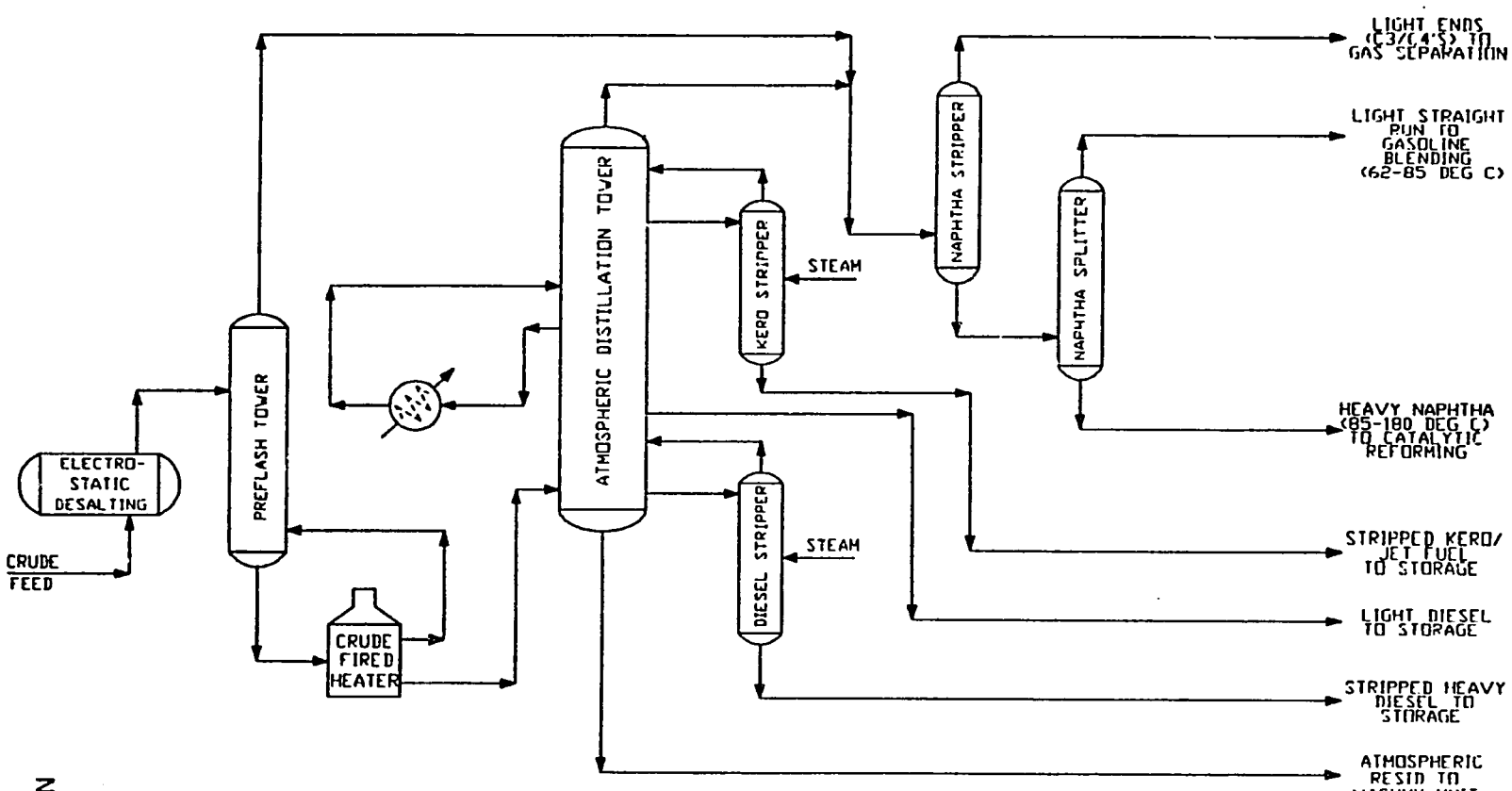

FIGURE

DATE	REV	BY	APPR	DESCRIPTION
10/16/91	A	TG	PDA	FOR EVALUATION REPORT
4/15/92	0	TC	PDA	FOR FINAL REPORT

Davy McKee Corporation
CHICAGO ILLINOIS

NEFTOCHIM REFINERY
BOURGAS, BULGARIA

SIMPLIFIED PROCESS FLOW DIAGRAM
ATMOSPHERIC DISTILLATION UNIT AD-5

DWG. No. 2063-12-01- 0

NEFTOCHIM

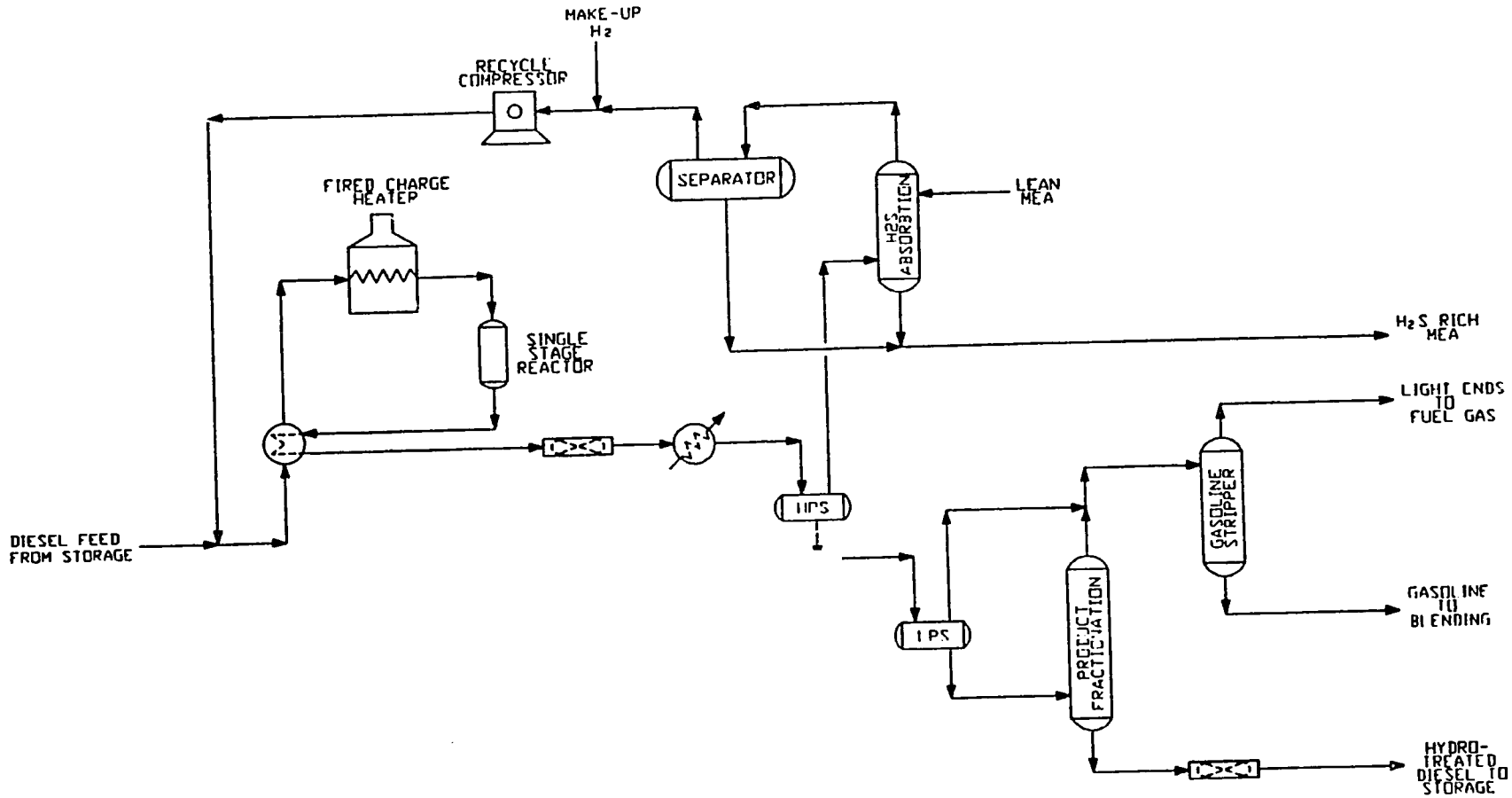

FIGURE 4

DATE	REV	BY	APPR	DESCRIPTION
10/16/91	A	T.G	PDA	FOR EVALUATION REPORT
4/15/92	0	T.C	PDA	FOR FINAL REPORT

Davy McKee Corporation
CHICAGO ILLINOIS

NEFTOCHIM REFINERY
BOURGAS, BULGARIA

SIMPLIFIED PROCESS FLOW DIAGRAM
DIESEL HYDROTREATING UNIT HDS-3

DWG. No. 2063-12-01-107 | 0

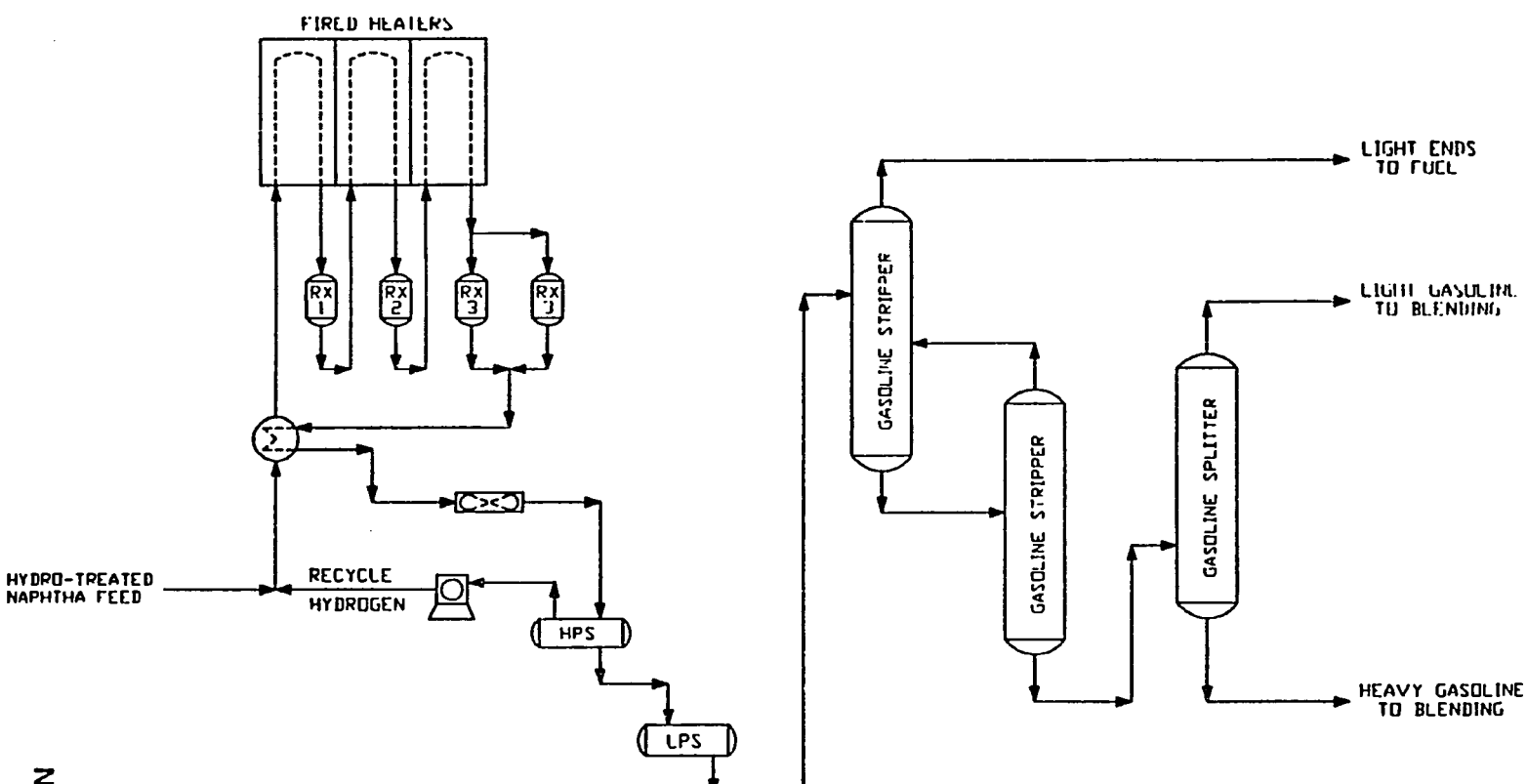

FIGURE 5

DATE	REV	BY	APPR	DESCRIPTION
10/16/91	A	TG	PDA	FOR EVALUATION REPORT
4/15/92	0	TC	PDA	FOR FINAL REPORT

Davy McKee Corporation
CHICAGO ILLINOIS

NEFTOCHIM REFINERY
BOURGAS, BULGARIA

SIMPLIFIED PROCESS FLOW DIAGRAM
CATALYTIC REFORMING UNIT CR-2

DWG. No. 2063-12-01 B

NEFTOCHIM

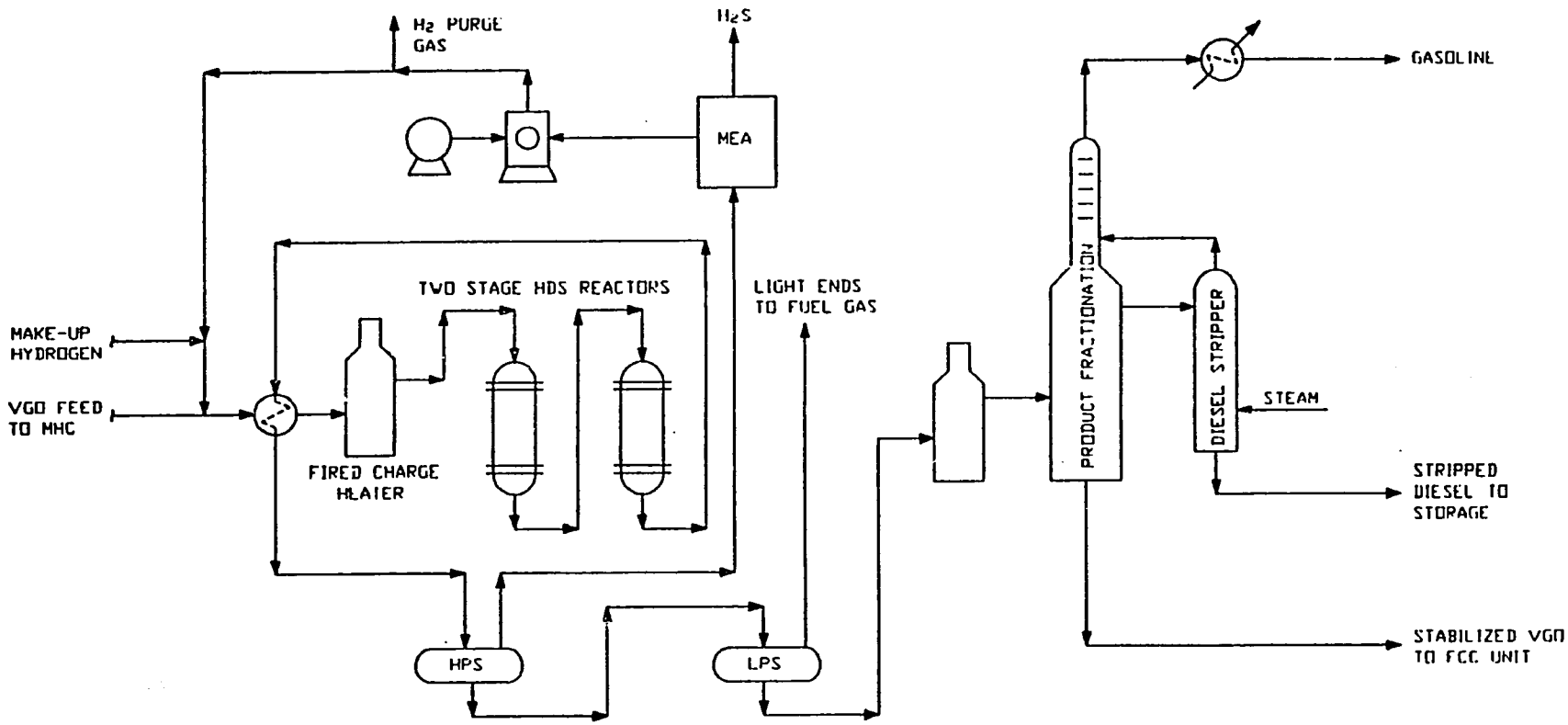

FIGURE 6

DATE	REV	BY	APPR	DESCRIPTION
10/16/91	A	T.G	PDA	FOR EVALUATION REPORT
4/15/92	0	T.G	PDA	FOR FINAL REPORT

Davy McKee Corporation
CHICAGO ILLINOIS

NEFTOCHIM REFINERY
BOURGAS, BULGARIA

SIMPLIFIED PROCESS FLOW DIAGRAM
(FCC FEED HYDRODESULFURIZATION)

DWG. No. 2063-12-01-103 | 0

NEFTOCHIM

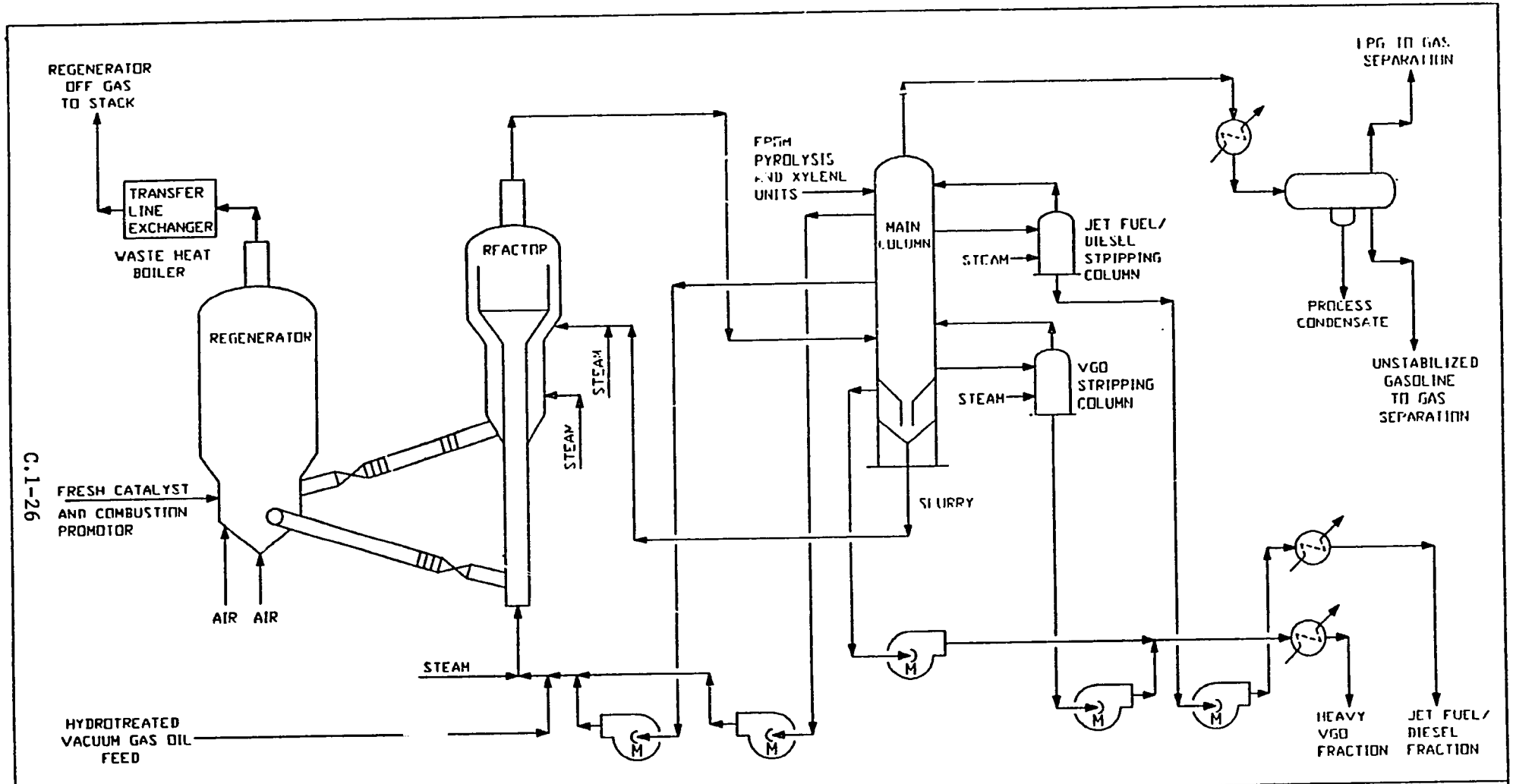

DATE	REV	BY	APPR	DESCRIPTION
10/16/91	A	T.G.	PDA	FOR EVALUATION REPORT
1/15/92	0	T.C.	PDA	FOR FINAL REPORT

Davy McKee Corporation
CHICAGO ILLINOIS

NEFTOCHIM REFINERY
BOURGAS, BULGARIA

SIMPLIFIED PROCESS FLOW DIAGRAM
FCC UNIT

DWG. No. 2063-1 104 0

FIGURE

NEFTOCHIM

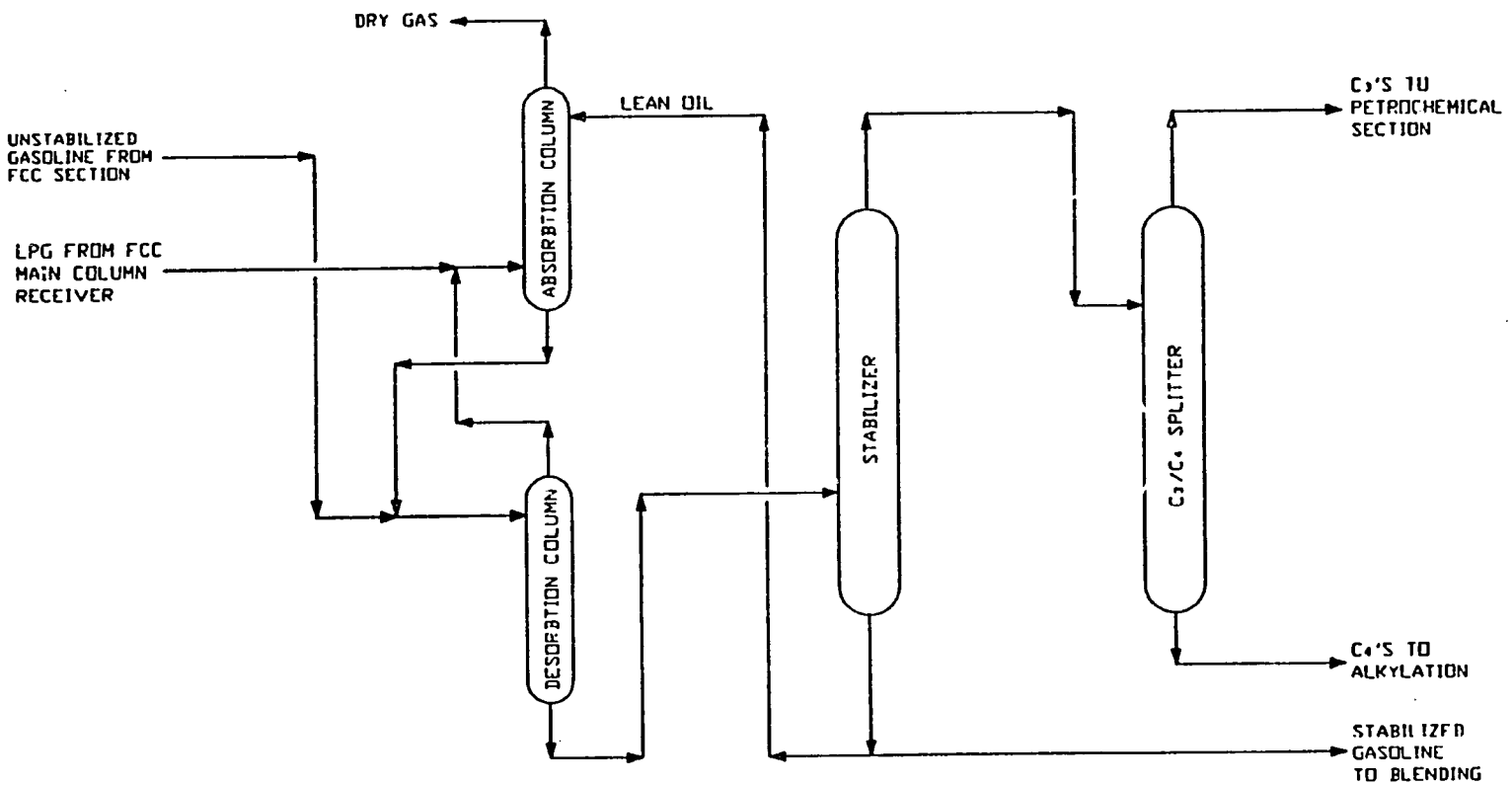

FIGURE 8

DATE	REV	BY	APPR	DESCRIPTION
10/16/91	A	T G	PDA	FOR EVALUATION REPORT
4/15/92	0	T G	PDA	FOR FINAL REPORT

Davy McKee Corporation
CHICAGO ILLINOIS

NEFTOCHIM REFINERY
BOURGAS, BULGARIA

SIMPLIFIED PROCESS FLOW DIAGRAM
FCC GAS CONCENTRATION UNIT

DWG. No. 2063-12-01-105 | 0

NEFTOCHIM

TABLE C.1.10.1 - NEFTOCHIM CRUDE OIL TBP DATA

CRUDE OIL	IRANIAN OIL		SOVIET OIL
Density, °API	29.2 (Heavy)	34.5 (Light)	32.5
Boiling Range, °C	wt%	wt%	wt%
15 - 62	2.4	2.4	2.6
62 - 70	3.5	3.2	3.3
70 - 90	5.5	5.6	5.1
90 - 105	7.6	6.8	7.3
105 - 120	9.4	10.0	9.2
120 - 140	12.6	13.6	12.0
140 - 160	15.8	17.5	14.8
160 - 180	18.9	21.2	17.9
180 - 200	21.7	24.4	20.8
200 - 220	24.8	26.8	23.9
220 - 240	27.9	28.8	27.2
240 - 260	31.2	31.8	30.7
260 - 280	34.6	35.6	34.2
280 - 300	37.6	39.8	37.7
300 - 320	40.9	44.4	41.9
320 - 340	44.2	49.4	45.3
340 - 360	47.1	54.4	48.1
360 - 380	50.1	58.8	52.1
380 - 390	51.8	60.5	54.0
Residual	97.4	97.0	97.7
Gases	98.6	99.0	99.5
Loss	100.0	100.0	100.0

TABLE C.1.10.2 - NEFTOCHIM LPG
(LIQUIFIED PETROLEUM GAS) SPECIFICATIONS

Composition	Propane	Butane	LPG
Vapor Pressure at 100 °F			1600
Volatile Residue			2
Butane and Heavier, LV % (Max)			70
Pentane and Heavier, LV % (Max)			2
Residual Matter			
Corrosion, Copperstrip, Max.			
Total Sulfur, ppmw			
Moisture Content			
Free Water Content			
If Bottled at Refinery?	No	No	Yes

TABLE C.1.10.3 - NEFTOCHIM GASOLINE PRODUCT SPECIFICATIONS

Destination	A-86	A-93	A-96	A-93H
Research Octane	86	93	96	93
Motor Octane	76	83	84	83
Total Lead g/kg (not more than)	0.15	0.15	0.15	0.006 g/dm^3
Density @ 20°C g/cm^3 (not less than)	0.700	0.700	0.700	0.720
Distillation				
IBP (not lower than)				
summer	32	32	32	32
spring/fall	30	30	30	30
winter	no limit	no limit	no limit	no limit
10% (not higher than)	70	70	70	70
50% (not higher than)				
summer	115	115	115	115
spring/fall	115	115	115	115
winter	110	110	110	110
90% (not higher than)	180	180	180	180
EP (not higher than)	205	205	205	205
Residue in Flask wt %	1.5	1.5	1.5	1.5
Residue + Losses wt %	3.5	3.5	3.5	3.5
Sulfur vol % (not more than)	0.05	0.05	0.05	0.05
Lower Heat of Combustion MJ/kg (not less than)	-	-	-	44
Induction Period (minutes) (not less than)	600	600	480	600
Acidity mg KOH/100 cm^3 product (not more than)	3	3	3	3
Mechanical Impurities and Water	none	none	none	none
Water Soluble Acids	none	none	none	none
Copper Strip Corrosion	OK	OK	OK	OK
Saturated Vapor Pressure kPa (not more than)				
summer	66.7	60	60	60
spring/fall	66.7	66.7	66.7	66.7
winter	86.7	80	80	80

TABLE C.1.10.4 - NEFTOCHIM JET FUEL PRODUCT SPECIFICATIONS

Designation	T-1	TC-1	T-2	RT
Density @ 20°C (not less than) g/cm³	0.800	0.775	0.755	0.775
Distillation °C IBP 10% (not higher than) 50% 90% 98%	≤ 150 175 225 270 280	≤ 150 165 195 230 250	≥ 60 145 195 250 280	≥ 135 175 225 270 280
Kinematic Viscosity @ 20°C mm²/sec (not less than) -40°C mm²/sec (not more than)	1.50 16	1.25 8	1.05 6	1.25 16
Lower Heat of Combustion MJ / kg (not less than)	42.90	42.90	43.10	43.12
Smokeless Flame Temperature °C (not less than)	20	25	25	25
Acidity mg KOH/100 cm³ (not less than)	0.7	0.7	0.7	0.4-0.7
Saturated Vapor Pressure (Kpa)	no limit	-	13.3	-
Flash Point °C (not less than)	30	28	-	28
Freeze Point °C (not higher than)	-60	-60	-60	-55
Iodine No. g/100 g product (not more than)	2	3.5	3.5	0.5
Aromatics % (not more than)	20	22	22	22
Actual Resins mg/100 g fuel (not more than)	6	5	5	4
Sulfur % (not more than)	0.1	0.25	0.25	0.1
H_2S	none	-	-	-
Mercaptan Sulfur % (not more than)	-	0.005	0.005	0.001
Copper Strip Corrosion	OK	OK	OK	OK
Ash % (not more than)	0.003	0.003	0.003	0.003

TABLE C.1.10.5 - NEFTOCHIM DIESEL FUEL PRODUCT SPECIFICATIONS

Description	Summer	Spring/Fall	Winter
Density @ 20°C g/cm^3	no specification	no specification	no specification
Cetane No. (not less than)	45	45	45
Cetane Index (not less than)	45	45	45
Distillation °C (not higher than)			
50%	300	300	280
90%	360	360	345
95%	-	-	360
Kinematic Viscosity @ 20 °C (mm^2/sec)	2.5 - 8.0	2.5 - 8.0	2.5 - 8.0
Acidity mg KOH/100 cm^3 (not more than)	5.0	5.0	5.0
Ash % (not more than)	0.02	0.02	0.02
Sulfur % (not more than)			
Group I	0.20	0.20	0.20
Group II	0.30	0.30	0.30
H_2S Test	none	none	none

TABLE C.1.10.6 - NEFTOCHIM FUEL OIL SPECIFICATIONS

Description	Medium Fuel Oil	Heavy Fuel Oil
Kinematic Viscosity @ 80°C mm^2/sec (not more than)	59	115
"Engler" Viscosity, °E	8	15
Ash % (not more than)	0.10	0.14
Sulfur % (not more than) Lower Content Higher Content	 1.0 3.5	 1.0 3.5
Water Soluble Acids and Alkalines	-	-
Water and Sediment % (not more than)	1.0	1.0
Fluidity Temperature °C (not higher than)	-	-
Freeze Point °C (not higher than)	25	25
Flash Point °C (not lower than)	90	110
Lower Specific Heat of Combustion MJ/kg (not lower than)	40.2	39.8
Density @ 20°C g/cm^3 (not more than)	-	1.015

C. INDIVIDUAL REFINERY DATA

2. PLAMA - PLEVEN, BULGARIA

The refinery is located about 200 kilometers northeast of Sofia and 30 kilometers south of the border with Romania. Crude is received by ship at Drouzba north of Bourgas on the Black Sea, transhipped to Varna by coastal tanker, then sent overland by rail to the refinery some 300 kilometers west. The refinery was situated near local Bulgarian oil wells with the intent of processing local crude. The quantity of domestic crude proved to be inadequate and imported crude must substituted. In the immediate past and currently, low sulfur crudes suitable for lube oil production, with less than 0.5% sulfur, are obtained from Syria, Libya and Algeria.

Address:	Plama - Pleven 5800 - Pleven Bulgaria
Telephone:	359 64 28111
Telex:	34484, 34556
Telefax:	359 64 33576
Contact:	Mr. Nicola Pukalsky - General Manager

2.1 Summary Description of Refinery

Overall refinery capacity is 1.2 million tonnes per year of crude oil. This facility is primarily a lube oil refinery, producing various grades of lubricating and transformer oils, paraffin, greases, ceresine, and bitumen. Additional products include A-86 (leaded 86 RON) gasoline, kerosene, and diesel fuels. The refinery processing capacity based on the various crude feedstocks is listed below :

Bulgarian	3 550 tonnes/day
Libyan	3 700 tonnes/day
Algerian	3 550 tonnes/day

At the time of the visit to the Pleven (Plama) refinery, the average feedstock processing rate in 1991 was 2 412 tonnes/day.

Refer to Figure No. 9 for the Overall Block Flow Diagram of the Plama Refinery.

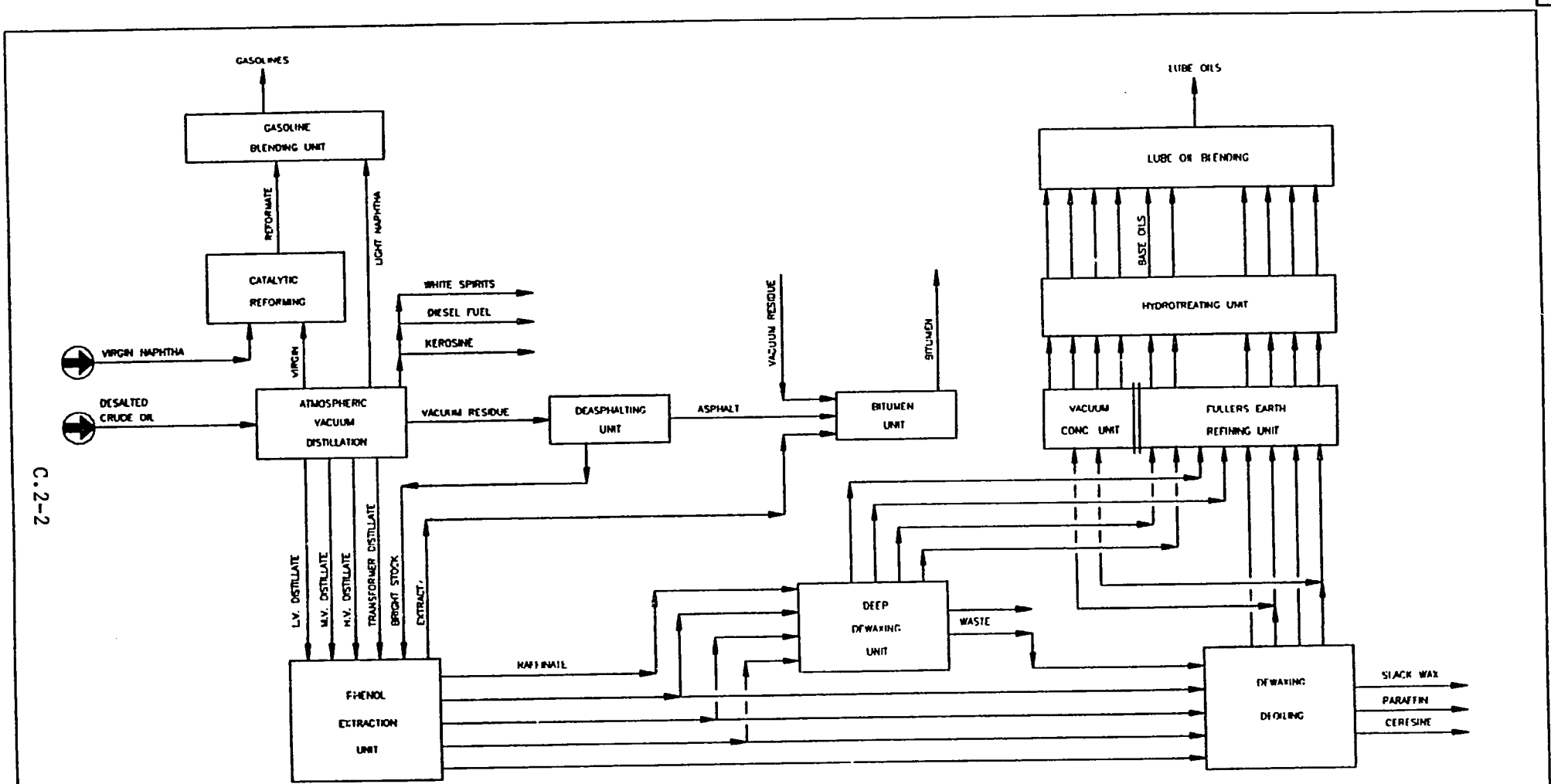

FIGURE 9

DATE	REV	BY	APPR	DESCRIPTION
10/24/91	A	T G	PDA	FOR CHARACTERIZATION REPORT
4/15/92	0	T C	PDA	FOR FINAL REPORT

Davy McKee Corporation
CHICAGO ILLINOIS

PLAMA REFINERY
PLEVEN, BULGARIA

OVERALL REFINERY
BLOCK FLOW DIAGRAM

DWG. No. 2063-11- '01 | 0

Table C.2.1.1. lists some of the major units in the refinery with the name of the licensor, contractor, and commissioning date for each.

TABLE C.2.1.1 - START-UP DATES OF REFINING UNITS AT PLAMA

UNIT	DATE	CONTRACTOR	LICENSOR
Deasphalting	1 Dec 1970	Gidronephtezavod, USSR	USSR
Solvent Refining	23 Dec 1970	Gidronephtezavod, USSR	USSR
Clay Refining	25 Feb 1971	Gidronephtezavod, USSR	USSR
Dewaxing	18 Mar 1971	Gidronephtezavod, USSR	USSR
Deep Dewaxing	30 Aug 1974	Gidronephtezavod, USSR	USSR
Catalytic Reforming	Nov 1979	Gidronephtezavod, USSR	SKL - Masdegurs Formerly East Germany
Hydrotreater	Nov 1979	Gidronephtezavod, USSR	USSR

The above table is incomplete. Historical information related to the other processing units was not available.

Tables C.2.1.2 and C.2.1.3. indicate the product slate based on current throughput of about 796 000 tonnes/year of a blend of Bulgarian, Libyan, and Algerian crude oils.

TABLE C.2.1.2 - PLAMA - ATMOSPHERIC - VACUUM DISTILLATION
Product Distribution (wt%)

Product	Range °C	Local Bulgar.	Libyan				Algerian Zayetin
			Sarir	Zuetina	El Brega	Sirtika	
Light Straight Run Gasoline	32 - 105	7.0	4.3	5.5	6.6	6.6	6.8
Naphtha	85 - 190	18.0	11.0	16.5	16.0	17.4	16.3
Diesel	200 - 360	33.1	26.5	30.9	30.5	34.1	32.9
Full Fraction	349 - 538	0.0	2.4	1.5	1.0	1.0	0.5
Transformer Distillate	330 - 380	6.2	5.1	6.8	6.4	3.8	6.2
Low Viscosity Distillate	350 - 400	3.6	5.3	3.8	3.0	2.1	3.5
Med. Viscosity Distillate	400 - 450	8.0	9.8	8.3	8.3	7.6	7.9
High Viscosity Distillate	450 - 490	5.3	5.8	4.8	5.9	5.5	6.1
Vac. Resid.	> 490	15.4	27.3	19.1	18.9	18.6	16.9
Gas		1.5	0.6	0.9	1.5	1.45	1.0
Losses		1.85	1.85	1.85	1.85	1.85	1.85

Table C.2.1.3 - PRODUCTS OBTAINED FROM PROCESSING DIFFERENT CRUDE PRODUCT DISTRIBUTION (wt%) AT PLAMA

Oil Products	Libyan Oil			Algerian Oil	
	Sarir	Zuetina	El Brega	Zar Zayetin	Sahara Blanc
High Octane Gasoline	4.3	5.5	6.6	6.8	7.0
Low Octane Gasoline	9.5	14.9	13.8	16.0	17.2
Diesel Oil	28.8	32.3	31.4	33.4	27.3
Paraffins	1.3	1.1	1.0	0.6	1.4
Kerosene	0.8	0.7	0.6	0.4	0.6
Lube Oils	13.1	9.4	11.1	5.0	3.4
Transformer Oil	1.8	2.6	2.0	2.7	3.0
Grease	13.2	11.0	10.7	12.5	13.5

Note: Balance is believed to consist of vacuum resid, light gases including LPG, and the fuel and energy expended in production.

Atmospheric and vacuum units

The refinery has one atmospheric distillation column and two vacuum columns. The processing capacity of the distillation units is 3 700 tonnes/day.

Light ends and gasoline processing

The light gases off the atmospheric column are used as plant fuel. Naphtha fractions are either desulfurized and reformed or go directly to gasoline blending. Catalytic Reforming consists of one hydrotreater reactor plus three reforming reactors. The reformer operates at 26 bars. The reforming catalyst is an Englehard E-603. The capacity of the hydrotreater and reformer is 947 T/day.

Deasphalting

The Deasphalting Unit consists of two extraction columns that process vacuum residue to produce asphalt. The capacity is: vacuum residue 552 tonnes/day from which 340 tonnes/day asphalt is produced.

Solvent refining

This unit uses phenol as a solvent. It has a capacity of 1158 tonnes/day.

Dewaxing

This is a dual function unit for dewaxing and deoiling of raw paraffin. The solvent is a mixture of toluene and acetone. The units share common ammonia refrigeration and inert gas systems. The unit capacity is 524 tonnes/day.

Deep dewaxing

This unit is designed for the production of transformer oil and low pour point base oil components. The capacity of the unit is 182 tonnes/day.

Bitumen production

This is a typical air blowing type of operation. The capacity of the unit is 1 500 tonnes/day.

Vacuum concentration unit

This unit consists of a single vacuum column and is designed for the production of Bright-stock by fractionating dewaxed oil components. The capacity of this fractionator is 353 tonnes/day.

Contact finishing

The unit is only used when the Hydrotreater is not in service. Its capacity is 606 tonnes/day.

Hydrotreatment of oils, paraffins & ceresine

This unit was designed to process three flow streams with common circulation of the hydrogen containing gas. The first stream hydrotreats oil while the third stream processes the paraffin and ceresine. The second stream is not used at present. The unit has following capacities:

For oil	712 tonnes/day
For paraffin and ceresine	75.8 tonnes/day

2.2. Utilities, Services, Offsites

Water systems

The refinery makeup water is supplied from a manmade lake. There is no treatment for cooling towers.

Potable water is obtained from local wells and is chlorinated.

There are three cooling tower systems with a total capacity of 9 200 cubic meters/h.

The boiler feed water is treated with hydrazine, ammonia, and sodium phosphate.

Table C.2.2.1 - QUALITY OF DAMMED LAKE WATER AT PLAMA

Test	Value	Test	Value
TDS	190 mg/liter	Oil & Grease	1.2 mg/liter
TSS	NA	Ammonia	0.08 mg/liter
COD	8.1 mg O_2/liter	Sulfites	19.2 mg/liter
Ph	7.79	Hardness	2.8 mg/liter
Fe	0.54 mg/liter	Chlorides	7.09 mg/liter

Table C.2.2.2 - QUALITY OF DRINKING WATER AT PLAMA

Source Underground wells: Capacity 5 000 liters/minute

Test	Value	Test	Value
TOC	0.72 mg O_2/liter	Oil & Grease	0.5 mg/liter
Hardness	4.7 mg/liter	Nitrates	5.6 mg/liter
Chlorides	8.86 mg/liter	-	-

Electrical power

The electrical power for the refinery is produced by means of a steam turbine. 100 bar steam is let down through the turbine to produce 60 MW. The only backup is provided by the national grid.

Motors 200 Kw and above use 6 000 V/3 phase/50 Hz.

Motors below 200 Kw use 400 V/3 phase/50 Hz.

Steam system

Steam is produced in three gas/oil fired boilers with a capacity of 220 tonnes/hour at 100 bar. The letdown steam at 10 bar from the power generator turbine is used in the plant. A 2.5 bar steam system is also available through condensate flash tanks. Following are the steam systems used in the plant:

Medium Pressure:	10 bar @ 240 °C
Low Pressure:	2.5 bar @ 120 °C

Fuel system.

The fuel gas is a mixture of refinery gases and imported natural gas. The compositions are indicated in Table C.2.2.3.

The specifications of the fuel oil are indicated in Table C.2.2.4.

TABLE C.2.2.3 - FUEL GAS DATA AT PLAMA

PROPERTY	SOURCE	
Composition (Volume %)	Refinery	Imported
H_2	0.8 - 81	-
CH_4	8 - 48	92
C_2H_4	4 - 18	-
C_2H_6	-	-
C_3H_6	2 - 38	-
C_3H_8	-	0.8
C_4H_8	-	0.2
i-C_4H_{10}	0.4 - 20	0.1
n-C_4H_{10}	0.7 - 22	0.1
C_5H_{10}	-	0.01
i-C_5H_{12}	0.1 - 2.0	-
n-C_5H_{12}	0.1 - 2.0	-
TOTAL	100%	100%

TABLE C.2.2.4 - FUEL OIL DATA AT PLAMA

TYPE	VALUE
Density, g/cubic meters	0.880 - 0.820
Distillation, Volume 10% 90%	 - -
Viscosity, at 50 °C, Cst °E	75 10
Pour Point, °C	90
Flash Point, °C	40
Sulfur Point, wt%	1.0
Carbon Residue, wt%	-
Ash, wt%	0.10
Corrosion, Copper Strip	OK
Lower Heating Value, MJ/kg	40.2

Refrigeration system

There are two refrigeration systems utilizing ammonia as a refrigerant. Total capacity is 3.5 Gcal/h.

Inert gas

99.9% purity nitrogen is produced by liquefaction of air. The capacity of the system is 1 230 cubic meters/h.

Instrument and plant air

The plant has capability of providing oil free air at 6.0 bar. Instrument air is dried to a dew point of -40 °C.

Flare and blowdown system

The plant has one flare stack with a tip diameter of 520 mm. There is 5 cubic meters knockout drum without a condensate return system.

Fire protection equipment

The plant has four fire fighting trucks. The steam and foam systems are available at cable ducts, heaters, pump stations, loading and unloading scaffolds. Column cooling system is also available.

Storage tanks

This refinery appears to have sufficient storage capacity for crude feedstocks, and refined products.

2.3 Chemicals and Catalysts Use

The reformer catalyst is Engelhard (E-603). The catalyst consumption was not available.

The chemical consumptions reported by the refiner are listed below :

Propane for Deasphalting	2.7 kg/tonne of feed
Phenol for Solvent Refining	3.0 kg/tonne of feed

Chemicals for Dewaxing:

Ammonia	4.3 kg/tonne of feed
Toluene	6.3 kg/tonne of feed
Acetone	3.9 kg/tonne of feed
Ethane	3.2 kg/tonne of feed

Actual consumption of other chemicals (such as oxygen and nitrogen), and hydrotreating catalyst were not available.

2.4 Previous 12-month Operating History

2.4.1. Recent Modifications

Recently Plama works has been installing waste heat recovery steam generators on most of the process furnaces. Also, they have revamped the vacuum system for the dewaxing unit by replacing ejectors with liquid ring pumps.

2.4.2. Crude Oil Supply

During 1990, following crude oils (tonnes) were processed at Plama:

Local Bulgarian Crude	40 508
Libyan Crudes	
Sarir	606 252
Sirtika Blend	142 942
Es Sider	39 517
Total tonnes	906 460

The properties of two major crude oils (Sarir and Zueti:n) are indicated in Table C.2.4.1. For the TBP data and properties of other crude oils, refer to section C.2.10.

TABLE C.2.4.1. - CRUDE OIL PROPERTIES USED AT PLAMA

CRUDE NAME SOURCE (COUNTRY)	SARIR LIBYA	Zuetina LIBYA
CRUDE OIL		
API Gravity, °API	36.0	41.0
Specific Gravity	0.840	0.818
Sulfur, wt%	0.25-0.30	0.38
Pour Point, °F	60-80	20
Viscosity, Cst at 50 °C	5.86	2.82
Conradson Carbon, wt%	4.32	2.70
Asphaltenes & Resins, vol%	1.86	0.20
GASOLINE, (IBP - 180 °C)		
Yield, wt%	15.3	22.0
Sulfur, wt%	0.05	-
Octane, F-1,0.15 cubic meters/liter(tel)	-	-
LIGHT GAS OIL, (180 - 340 °C)		
Yield, vol%	28.8	32.3
API Gravity, °API	41.0	42.0
Sulfur, wt%	10-0.15	0.16-0.18
Pour Point, °C	30	6
HEAVY GAS OIL, (340 - 490 °C)		
Yield, vol%	26.0	23.7
API Gravity, °API	-	-
Sulfur, wt%	0.27	-
RESIDUAL (490 °C+)		
Yield, vol%	27.3	19.1
API Gravity, °API	-	-
Sulfur, wt%	0.60	1.62
Viscosity at 100 °C, cp	466	252
Viscosity Index	90-95	90-95

2.4.3. Operating Experiences

During 1990, total crude oil processed was 906 460 tonnes.

For the year 1990, tables C.2.4.2, C.2.4.3, C.2.4.4, and C.2.4.5 list the shutdown periods.

TABLE C.2.4.2 - PLANNED SHUTDOWN PERIODS FOR 1990 AT PLAMA

LONG SHUTDOWN PERIODS (hours)	
Overhaul of main process units	600
Overhaul of thermal power plant (once every 5 years) turbines boilers	 960 1 440 for each boiler
SHORT SHUTDOWN PERIODS	
Regeneration of catalyst catalytic reforming hydrotreating	 240 240
Activation of catalyst in Hydrotreating Unit	11 x 48
Flushing of extraction columns in Deasphalting Unit	4 x 48
Repairs to Thermal Power Plant turbines boilers	 2 x 192 360 for each boiler

TABLE C.2.4.3 - TOTAL SHUTDOWN TIME IN 1990 AT PLAMA

Unit	Shutdown Period (hours)
Atmospheric-Vacuum Distillation	1 434
Catalytic Reforming	3 488
Deasphalting	997
Solvent Refining	1 660
Dewaxing	671
Deep Dewaxing	858
Hydrotreating	4 386
Bitumen	3 137

TABLE C.2.4.4 - UNPLANNED SHUTDOWNS REPORT FOR 1990 AT PLAMA

UNIT	SOURCE / REASONS FOR UNPLANNED SHUTDOWNS (hours)				Other
	Loss of Crude Oil	Loss of Elec. Power	Fire	Failures	
Atmospheric - Vacuum Distillation	647	18	108	118	-
Catalytic Reforming	2 632	-	-	-	-
Deasphaltizing	362	-	-	-	-
Solvent Refining	846	-	-	24	323
Dewaxing	-	24	-	65	36
Deep Dewaxing	270	30	-	24	-
Hydrotreating	1 709	-	-	-	1 786
Bitumen	2 182	186	-	-	-

TABLE C.2.4.5 - AVERAGE WEEKLY THROUGHPUT FOR 1990 AT PLAMA

PRODUCTS	WEEKLY PRODUCTION (tonnes)	
	Minimum	Maximum
Gasoline	810	7 050
Diesel engine fuel	3 090	7 160
Burner fuel	-	1 570
Combustible Gas	-	470
White spirit	34	640
Fuel oils	1 840	3 750
Mineral oils	1 420	2 930
Bitumens	1 490	4 790
Purified paraffine	-	370
Purified ceresine	38	1 609

2.4.4. Impact of Crude Oil Changes

Although designed for local Bulgarian crude, the refinery receives and satisfactorily processes a variety of Middle Eastern feedstocks. It is capable of processing these crude feedstocks to gasolines, diesel fuels, and various grades of lube oils, waxes, ceresines, bitumens, etc. Based on the small unit capacity of the refinery and the recent operating experience, it appears that changes in crude oil fed to the refinery are not / will not be a major problem.

2.4.5. Impact of Product Market Changes

Currently the refinery production is oriented toward the domestic market. As the country moves toward a free market economy, foreign products will be competing in the domestic market. For the refinery it will mean that steps must be taken to produce products at a competitive price, and perhaps look at developing markets in neighboring countries.

2.4.6 Impact of Legislation and Social Changes

The impact of legislative and social changes toward a market oriented economy is expected to profoundly change the mode of operation of the refinery. The most important step, privatization of the refinery, is under evaluation.

Eventually, the lead additives currently used to improve gasoline octane will be eliminated. The aromatic content of gasoline will probably be reduced. Additionally, lower levels of diesel fuel sulfur and aromatics will possibly be legislated. These changes will require the refinery to consider future process unit modifications.

2.5 Environmental Considerations

2.5.1. Quality of Local Environment

Water emissions

The maximum amount of treated wastewater currently leaving the refinery amounts to 560 cubic meters per hour. The quality of this water is as follows:

BOD	180 mg/liter
COD	450 mg/liter
Hydrocarbons	150 mg/liter
Phenol	30 mg/liter
Total Suspended Solids	200 mg/liter
pH	8.3

The above figures are higher than the standards set fourth in Decree No. 8.

Air emissions

No sulfur balance was available, therefore, the amount of sulfur to the atmosphere is not known. Following is the composition of pollutants in the flue gases:

Sulfur Dioxide	0.23 - 0.77 g/m^3
Nitrogen Oxide	2.00 - 2.54 g/m^3
Nitrogen Dioxide	0.20 - 0.51 g/m^3
Soot	0.09 g/m^3 [1]

[1] Soot emanates only from the power station.

Operational Improvements

Computer software and hardware

The refinery at Plama can use both process simulation and LP model software. The simulation programs will help them in predicting the crude and vacuum unit operation with crude oils other than the crude oil being processed currently. It can predict the flash zone conditions, draw off temperatures, and pumparound duties.

LP models are used for planning future operations with different feed stocks. The models are also used conduct profit analysis.

Plama can also use a PC based maintenance planning and spare parts inventory program.

Vacuum units

Consider changing vacuum column internals with structured packing (Sulzer Mellapak or equal). This packing could result in lower pressure drop, better product separation, and higher capacity.

Also consider use of the liquid ring vacuum pumps. These pumps are more efficient than steam ejectors. Environmentally, the vacuum pumps eliminate the problems associated with disposal of hydrocarbon water mixture.

Environmental Impact Reductions

Secondary sealing of floating roof tanks

Environmentally it is a good idea. Also, it will save the hydrocarbon products being lost to the atmosphere.

The storage tank for reformer feed should be gas blanketed, to avoid oxygen leak in to the feed.

Gasoline reformulation: with no lead and reduced aromatics

Plama refinery should consider a new reformer (possibly with continuous catalyst regeneration), which is most efficient way to produce high octane gasoline. The existing Reforming Unit can be converted to an isomerization unit.

Solid wastes

The sludges from the refinery, tank bottoms, and wastewater treatment are disposed of in the mud settlers.

2.5.2. Current Emissions Controls

The wastewaters go through oil separation. The oil recovered is recycled back to the crude unit.

The wastewater is further treated chemically and biologically. The current capacity of the plant is 500 cubic meters/h. Plans are underway to double the capacity.

At present, the refinery does not have any Sox or NOx control.

2.6. Refinery Specific Potential and Opportunities for Improvement

Energy Efficiency Improvements

Improve steam balance

Steam balance can be improved by maximizing the condensate return to the boiler. This requires maintenance and proper selection of the steam traps, and on-line analysis and polishing of the condensate.

Improvement of efficiency of furnaces

Most furnaces are operating at around 60% combustion efficiency. Plama is in the process of installing waste heat recovery steam generators on most of the furnaces which is an excellent idea.

New combination burners are needed. In some cases a major revamp or replacement of furnaces may be required.

LPG recovery

Currently, Plama refinery is not recovering any propane or butane from the light ends off the crude unit. A major portion of this material is simply flared. On the other hand, the LPG to the city of Pleven is supplied by Neftochim.

Plama should consider installing a LPG recovery unit.

In-line lube oil blending

An in-line automatic lube oil blending plant will increase the efficiency of lube production. Also, the blender will facilitate meeting product specifications.

2.7. Refinery Specific Problems and Trends

The primary marketable products from the Plama refinery are various grades of lube oils. They would like to export these oils to Western and Eastern Europe. It appears the quality of the products acceptable to the Bulgarian market. To export, however, the refinery has to work at developing the market. It is likely that marketing and formulations agreement - or at least consultancy - with a major worldwide refiner (Shell, Exxon, B.P. have extensive lube oil experience) would pay off.

Currently, the crude oil is supplied to the refinery by rail cars from the port at the Black sea. As this appears to be an uneconomical, a pipeline is under consideration.

At present, Plama refinery does not recover any LPG (propane and butane). LPG is too expensive a product to be incinerated in the furnaces within the refinery.

In any refinery the fired heaters are the major energy consumers. The efficiency of most heater firing at Plama is improving as they are going through a program of adding waste heat steam generators to most of the major furnaces. However, they still need better control of air to the burners. Most of their furnaces are very old and of an obsolete design. It may be more economical to replace many of the furnaces rather than try to retrofit.

Environmentally, Plama must address the following:

- The new formulation of gasolines and diesel fuels will eventually be legislated in Bulgaria. This will mean lower or no lead additives in gasolines. The sulfur content of diesel and fuel oils will have to be reduced.

- In terms of air and liquid emissions, refinery management is aware of their problems, and they are trying to eliminate them.

2.8. Methodology of Data Collection

A questionnaire covering energy efficiency, operational flexibility, and environmental impact was prepared and sent to the refinery, about a month ahead of the project team's arrival at the site. During the visit to the refinery, it was apparent that the refinery management had completed most of the questionnaire in a very professional manner. This completed questionnaire furnished much of the data gathered and was supplemented by refinery personnel on site review and questioning on specific points as assessed by the Davy McKee team during their stay at the refinery.

2.9. Evaluation of Results Achieved by/for Data Base

Data gathered in the field, pertinent parts of which are included in a separate report, have been applied to the formation of a computerized data base.

2.10. Supporting Plant Data

The specifications and properties of various crude oils and products are indicated in the following tables:

C.2.10.1	TBP DATA FOR LIBYAN CRUDE OIL - SARIR
C.2.10.2	TBP DATA FOR LIBYAN CRUDE OIL - EL BREGA
C.2.10.3	TBP DATA FOR LIBYAN CRUDE OIL - ES SIDER
C.2.10.4	TBP DATA FOR LIBYAN CRUDE OIL - EL ZUETINA
C.2.10.5	GASOLINE
C.2.10.6	DIESEL FUELS
C.2.10.7	TECHNICALLY PURIFIED CERESINE
C.2.10.8	BITUMEN PROPERTIES
C.2.10.9	LUBE OIL SPECIFICATIONS
C.2.10.10	TRANSMISSION FLUID PROPERTIES
C.2.10.11	PROPERTIES OF TRANSFORMER OIL WITH ANTI-OXIDANT
C.2.10.12	TURBINE OIL PROPERTIES

<u>Process block flow diagrams</u>

Figures 10 and 11, depict the solvent refining and dewaxing units at Plama.

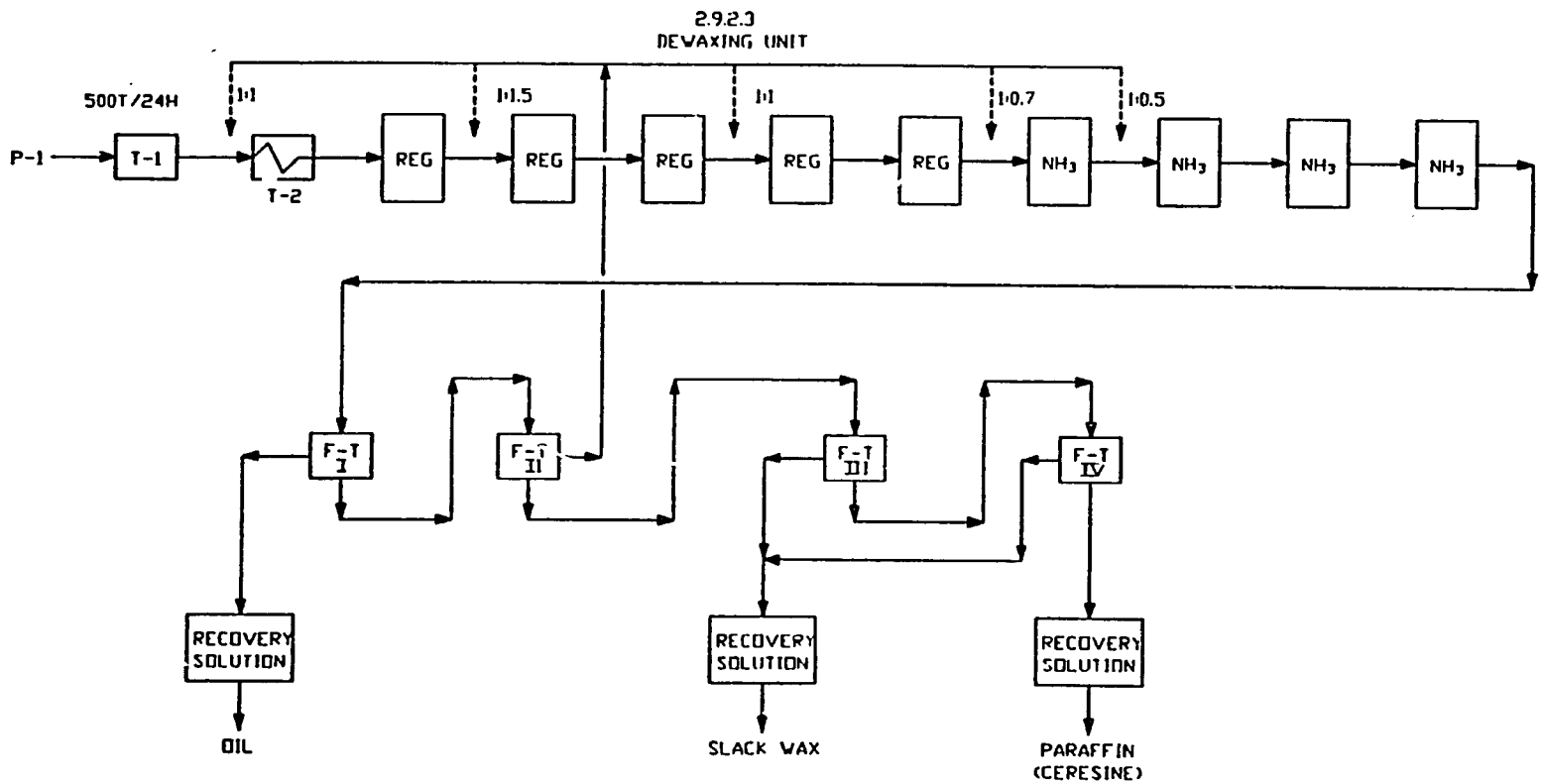

ACETONE - 35%
TOLUENE - 65%

FIGURE 10

DATE	REV	BY	APPR	DESCRIPTION
10/24/91	A	T C	PDA	FOR CHARACTERIZATION REPORT
4/14/92	0	T C	PDA	FOR FINAL REPORT

Davy McKee Corporation
CHICAGO ILLINOIS

PLAMA REFINERY
PLEVEN, BULGARIA

DEWAXING UNIT
GENERAL BLOCK DIAGRAM

DWG. No. 2063-11-' 03 | 0

SELECTIVE SOLVENT REFINING PHENOL-EXTRACTION
CAPACITY: 1,158 T/24 HRS.
RATIO OF RAW MATERIALS TO SOLVENT 1.0:1.0-3.6
VARIES ACCORDING TO CHARGESTOCK
ARRANGEMENT OF THREE SEPARATE STREAMS

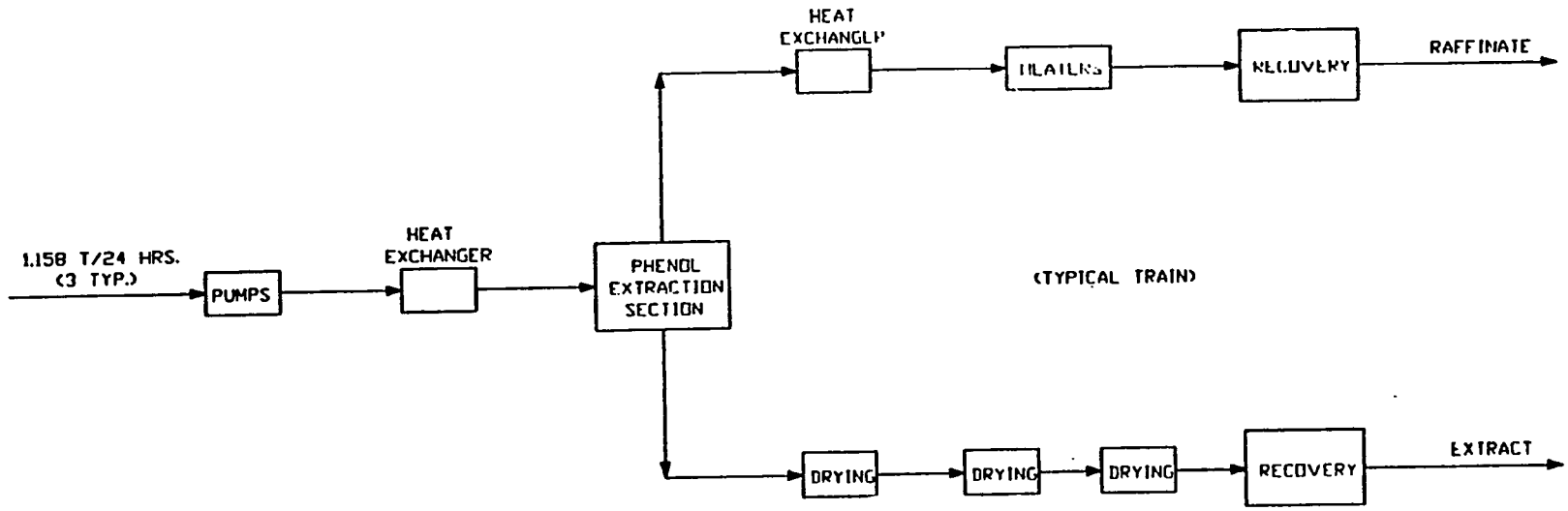

FIGURE 11

DATE	REV	BY	APPR	DESCRIPTION
10/24/91	A	T G	PDA	FOR CHARACTERIZATION REPORT
4/14/92	0	T C	PDA	FOR FINAL REPORT

Davy McKee Corporation
CHICAGO ILLINOIS

PLAMA REFINERY
PLEVEN, BULGARIA

SOLVENT REFINING
GENERAL BLOCK DIAGRAM

DWG. No. 2063-11-02-102 | 0

TABLE C.2.10.1 - TBP DATA FOR LIBYAN CRUDE OIL - SARIR

B.P. °C	% YIELD	CUMULATIVE WT%
C_1 - C_4	1.84	1.84
IBP - 95	2.92	4.76
95 - 120	3.42	8.18
120 - 135	3.45	11.63
135 - 155	4.31	15.94
155 - 180	3.78	19.72
180 - 234	5.59	25.31
234 - 267	4.93	30.24
267 - 300	6.55	36.79
300 - 330	6.79	43.58
330 - 349	2.74	46.32
349 - 362	1.75	48.07
362 - 374	2.15	50.22
374 - 382	2.21	52.43
382 - 392	2.39	54.82
392 - 401	2.12	56.94
401 - 411	1.95	58.89
411 - 421	1.88	60.77
421 - 431	2.15	62.92
431 - 445	2.09	65.01
445 - 454	1.76	66.77
454 - 468	2.72	69.49
468 - 484	2.60	72.09
484 - 496	1.56	73.65
496 - 508	1.83	75.48
Residual @ 508	24.52	100.00

TABLE C.2.10.2 - TBP DATA FOR LIBYAN CRUDE OIL - EL BREGA

B. P. °C	% YIELD	CUMULATIVE %
Gas	1.49	-
32 - 42	0.89	2.38
42 - 51	0.21	2.59
51 - 61	1.69	4.28
61 - 72	1.59	5.87
72 - 82	1.80	7.67
82 - 91	1.66	9.33
91 - 101	2.10	11.43
101 - 109	1.67	13.10
109 - 119	1.65	14.75
119 - 130	2.30	17.05
130 - 141	2.15	19.20
141 - 149	1.89	21.09
149 - 159	1.64	22.73
159 - 169	2.11	24.84
169 - 179	1.89	26.73
179 - 191	1.78	28.51
191 - 200	2.06	30.57
200 - 220	3.41	33.98
220 - 240	3.27	37.25
240 - 259	3.21	40.46
259 - 281	3.98	44.44
281 - 300	4.50	48.94
300 - 320	5.59	54.53
320 - 350	4.94	59.47
350 - 372	3.82	63.29
372 - 400	3.74	67.03
400 - 427	4.67	71.70
427 - 450	3.86	75.56
450 - 474	3.30	78.86
474 - 490	2.39	81.75
Residual	17.06	98.81
Loss	1.19	100.00

TABLE C.2.10.3 - TBP DATA FOR LIBYAN CRUDE OIL - ES SIDER

B.P. °C	WT%		DATA			KINEMATIC VISCOSITY	
	Fraction	Cumulative	Density g/cm³	Sulfur wt%	Set Point °C	50 °C Cst	100 °C Cst
IBP - 45	0.72						
45 - 70	2.76	3.48					
70 - 90	2.49	5.97					
90 - 111	3.11	9.08					
111 - 100	3.14	12.22					
130 - 150	3.08	15.38					
150 - 170	3.38	18.68					
170 - 180	1.64	20.32					
180 - 200	2.98	23.25					
200 - 230	3.03	26.28					
230 - 240	2.26	28.54					
240 - 251	2.46	31.00					
251 - 270	3.14	34.14					
270 - 280	2.36	36.50					
280 - 290	2.47	38.97					
290 - 300	2.36	41.33					
300 - 310	2.47	43.80					
310 - 320	3.52	47.32					
320 - 350	2.23	49.55		0.435		3.55	
350 - 375	4.00	53.55	0.864		+8		
375 - 400	4.00	57.55		0.530	+18	9.52	
400 - 425	5.50	63.05	0.890	0.573	+28	16.2	4.33
425 - 450	5.64	68.69	0.897		+36		
450 - 470	3.49	72.18	0.905	0.675	+40	51.5	9.52
470 - 490	3.44	75.62	0.919		+44		
Residual	21.88	97.50					
Gas	1.00	98.50					
Loss	1.5	100.0					

TABLE C.2.10.4 - TBP DATA FOR LIBYAN CRUDE OIL - EL ZUETINA

B.P. °C	% Yield	Cumulative %
Gas	0.50	-
75	4.00	4.50
75 - 110	5.50	10.00
110 - 155	8.80	18.80
155 - 200	9.70	28.50
200 - 221	4.90	33.40
221 - 241	4.90	34.90
241 - 260	1.50	41.65
260 - 277	6.75	43.25
277 - 302	1.60	49.90
302 - 312	1.35	51.25
312 - 322	1.98	53.23
322 - 328	2.04	55.27
328 - 344	1.97	57.24
344 - 358	2.00	59.24
358 - 365	1.96	61.20
365 - 375	1.97	63.17
375 - 388	2.02	65.19
388 - 393	1.98	67.17
393 - 405	1.97	69.14
405 - 415	2.05	71.19
415 - 426	4.04	73.23
426 - 440	2.05	75.28
440 - 450	2.04	77.32
450 - 464	1.97	79.29
464 - 476	2.00	81.29
476 - 492	1.91	83.20
Residual	16.80	100.00

TABLE C.2.10.5 - GASOLINE PROPERTIES

Type		86 Octane Regular
Density, g/cm^3		0.740
Octane Number		
	RON	86
	MON	78
Distillation, Volume	10%	70
	50%	115 / 110
	90%	110
	EP	205
Distillation Residue (wt%)		1.5
RVP (Kpa)		
	Summer	66.7
	Winter	86.7
Sulfur Content (wt%)		0.05
MTBE Content (wt%)		-
TEL Content, (g/liter)		0.15

TABLE C.2.10.6 - DIESEL FUELS

Type	Summer/Winter
Specific Gravity	0.880 / 0.820
Distillation, Volume IBP 10% 50% 90% EP	 180 / 190 200 / 220 300 / 280 360 / 345
Viscosity	2.5 / 8
Pour Point, °C Summer Winter	0 -20
Flash Point, °C	50
Sulfur Point, wt%	0.2 0.3
Carbon Residue, wt%	0.20
Ash, wt%	0.02
Water and Sediment, vol%	NONE
Corrosion, Copper Strip	OK
Cetane Number, Min.	45
Existent gum, mg / 100 ml	50

TABLE C.2.10.7 - TECHNICALLY PURIFIED CERESINE

Appearance	homogenous mass without mechanical impurities
Kinematic viscosity at 100 °C	9.5
Drop Point, °C, not lower than	75
Penetration at 25° C, in 0.1 mm	25
Color	light yellow

TABLE C.2.10.8 - BITUMEN PROPERTIES

Grade	60	BV-90
Penetration at 25 °C	100	-
Ductility at 25 °C	100	100
Softening Point (ring & ball), °C	49	46
Fraas brittle point, °C	10	-12
Loss on Heating at 163 °C, %	0.8	1.0
Penetration at 25 °C in 0.1 mm of the residuum after loss on heating, %	70	70

Table C.2.10.9 - LUBE OIL SPECIFICATIONS

SAE Grade	15W/40	20W/40	20W/50	20W	30W	40W	50W
Relative density at 20°C, g/cm³	0.885	0.886	0.889	0.881	0.885	0.889	0.892
Kinematic Viscosity at 100°C, mm²/sec	14.5	14.8	18.2	8.0	11.5	15.8	19.0
CCS Viscosity, mPa/s @ -15 °C	3 300	-	-	-	-	-	-
@ -10 °C	-	4 000	4 300	4 100	-	-	-
Viscosity Index	135	115	140	95	95	94	92
Pour Point, °C	-25	-20	-20	-21	-17	-12	-10
Flash Point, COC, °C	218	220	220	220	225	245	250
Evaporative Loss, (NOAK)% wt	10.0	9.5	9.5	-	-	-	-
TBN, mg KOH/g	9.0	9.0	9.0	4.5	4.5	4.5	4.5
Sulfated Ash, %	1.2	1.2	1.2	0.9	0.9	0.9	0.9

Table C.2.10.10 - TRANSMISSION FLUID PROPERTIES

Grade	ATF	MXP-40A
Kinematic viscosity at mm²/sec	7.2 (@ 100 °C)	41 (@ 40 °C)
Brookfield viscosity at -40 °C, cp	43 000	-
Viscosity index	108	140
Pour Point °C	-42	-40
Flash Point, COC, °C	170	180
Copper Strip Corrosion (3h, 150 °C)	1b	2c
Color	red	-

Table C.2.10.11 - PROPERTIES OF TRANSFORMER OIL WITH ANTI-OXIDANT

Property	Value
Kinematic Viscosity, mm^2/sec @ - 40 °C @ - 30 °C	 11 1 800
Acid Number, mg KOH/g	0.02
Pour Point, °C	-35
Closed Flash Point, °C	140
Relative density at 20 °C, g/cm^3	0.840
Dissipation factor at 90 °C and 50 Hz	3.10S0-3T
Induction Period, h	150
Breakdown voltage, Kv/cm	30

Table C.2.10.12 - TURBINE OIL PROPERTIES

ISO Grade	32	46
Kinematic viscosity at 100 °C, mm	28.8 - 35.2	41.4 - 50.6
Viscosity index	95	95
Pour Point, °C	-10	-10
Flash Point, COC, °C	200	210
Copper Corrosion, (3h, 100 °C)	1b	1b
Demulsibility time, s	250	250
TOST (ASTM D943) Time to TAN 2.0 mg KOH/g	2 000	2 000

APPENDIX A

REFINERY CHARACTERIZATION QUESTIONNAIRE

TABLE OF CONTENTS

		PAGE NO.
1.	General	1
2.	Refinery Configuration (including Material Balances)	4
3.	Properties and Specifications of Feeds and Products.	7
4.	Refinery Process Units	14
5.	Utility Information	14
6.	Off-Site Facilities	24
7.	Operating Cost Data	26
8.	Environmental Aspects	27
9.	Miscellaneous Information (Battery Limit Conditions)	41
10.	Instrumentation	42
11.	Mechanical Equipment Information	43
	APPENDIX	44

LIST OF TABLES AND FIGURES

TABLES		PAGE NO.
3-1	Crude Oil Properties	8
3-2	LPG Properties	10
3-3	Gasoline Properties	10
3-4	Jet Fuel Properties	11
3-5	Diesel Fuel Properties	12
3-6	Fuel Oil Properties	13
5-1	Steam System	15
5-2	Water Treatment	16
5-3	Water Systems	18
5-4	Water Analysis	19
5-5	Fuel Gas Data	22
5-6	Electrical Power	21

FIGURES

2.1	Generic BFD (Simple Refinery)	5
2.2	Generic BFD (Intergrated Refinery)	6

Davy McKee

1. GENERAL

1.1 NAME AND LOCATION

Name: _____

Location: _____

_____

_____

1.2 CORRESPONDENCE

Correspondence relating to this project shall be directed as follows:

To the Refiner:

Name: _____

Address: _____

_____

_____

Attention: _____

Telephone No: _____ Telex No.: _____

Ext.: _____ TWX: _____

Telecopier No.: _____

Telecopier Model: _____

(Does it receive not attended? Yes / No Hours_____)

To Davy McKee

Name: DAVY MCKEE CORPORATION

Address: 300 S. Riverside Plaza

Suite 1800

Chicago, Illinois 60606 USA

Attention: _____

Telephone No: (312) 669-7000 Telex No.: 190146

Ext.: 7031 TWX: N/A

Telecopier No.: (312) 902-1236

Telecopier Model: Cannon 705

(Does it receive not attended? Yes / No Hours: 24 hours)

Davy McKee

1.3. <u>SCOPE OF FACILITIES</u>

(Provide a general overall description including infrastructure)

1.4 SYSTEM OF MEASUREMENT

Indicate from the following, the units being followed by the refinery. (By circling selection for each of the following condition or property).

	ENGLISH	MKS	SI
Temperature	°F	°C	°C
Pressure	psi	kg/cm²	kPa
Mass	lb	kg	kg
Length	ft-in	m-mm	m-mm
Relative Density	Spec Gravity T°F/60°F	Spec Gravity T°C/15°C	Spec Gravity T°C/15°C
Absolute Density	°API or lb/gal at 60°F	kg/m³ at 15°C	kg/m³ at 15°C
Flowing Density	lb/ft³	kg/m³	kg/m³
Flowing Quantities			
Mass	lb/hr	kg/h	kg/h
Vapor	ft³/sec	m³/h	m³/h
Liquid	U.S. gal/min	m³/h	m³/h
Standard Quantities			
Vapor	10^6 std ft³/day at 60°F	normal m³/h at 0°C	std m³/h at 15°C
Liquid	bpd at 60°F	std m³/h at 15°C	m³/h at 15°C
Enthalpy	Btu/lb	kcal/kg	kJ/kg
Heat Rate	10^6 Btu/hr	10^6 kcal/hr	MW

It will be assumed that all data provided by refinery will be in the above units, unless noted otherwise.

1.5 SITE INFORMATION

1.5.1 Climatic Data

Winterizing provisions are based on _____ °_____.

Direction of prevailing wind is from _____.

1.5.2 Unit Elevation

Indicate elevation of refinery site above sea level _____.

(Average Barometric Pressure _____.)

Design Dry Bulb Temperature is _____°_____.

Design Wet Bulb Temperature is _____°_____.

2.0 REFINERY CONFIGURATION

2.1. REFINERY BLOCK FLOW DIAGRAM

Provide a Block Flow Diagram similar to Figures 2.1 or 2.2.

Figure 2.1 is a generic Block Flow Diagram for a very simple refinery, with the exception of a TOPPING UNIT or a LUBE OIL REFINERY.

Figure 2.2 is a generic Block Flow Diagram for a fully integrated refinery. This figure is only for reference, not many refineries consist of that many units.

The Desalter is not shown on the Block Flow Diagram. However, it should be shown if it exists.

2.2 Provide a list of the Refinery utilities and off-site facilities. (The Block Flow Diagrams in section 2.1 show only the process units.)

2.3 OVERALL MATERIAL BALANCE

Crude oil throughput:
Imported Blending Stocks:

Products:

LPG:
Regular Gasoline:
Premium Gasoline:
Solvents:
Feeds to Aromatic Complex:
Feeds to Petrochemical Complex:
Aviation Fuels:
Diesel Fuels:
Heating Oils:
Lube Oils:
Greases:
Asphalts:
Industrial Fuels:
Coke:
Etc.:

2.3.1 Provide the names and monthly (average) consumption quantities of various chemicals (treating, process, corrosion inhibitors, etc.) and catalysts. Include gasoline additives such as MTBE, TEL, etc., and additives for lube oils.

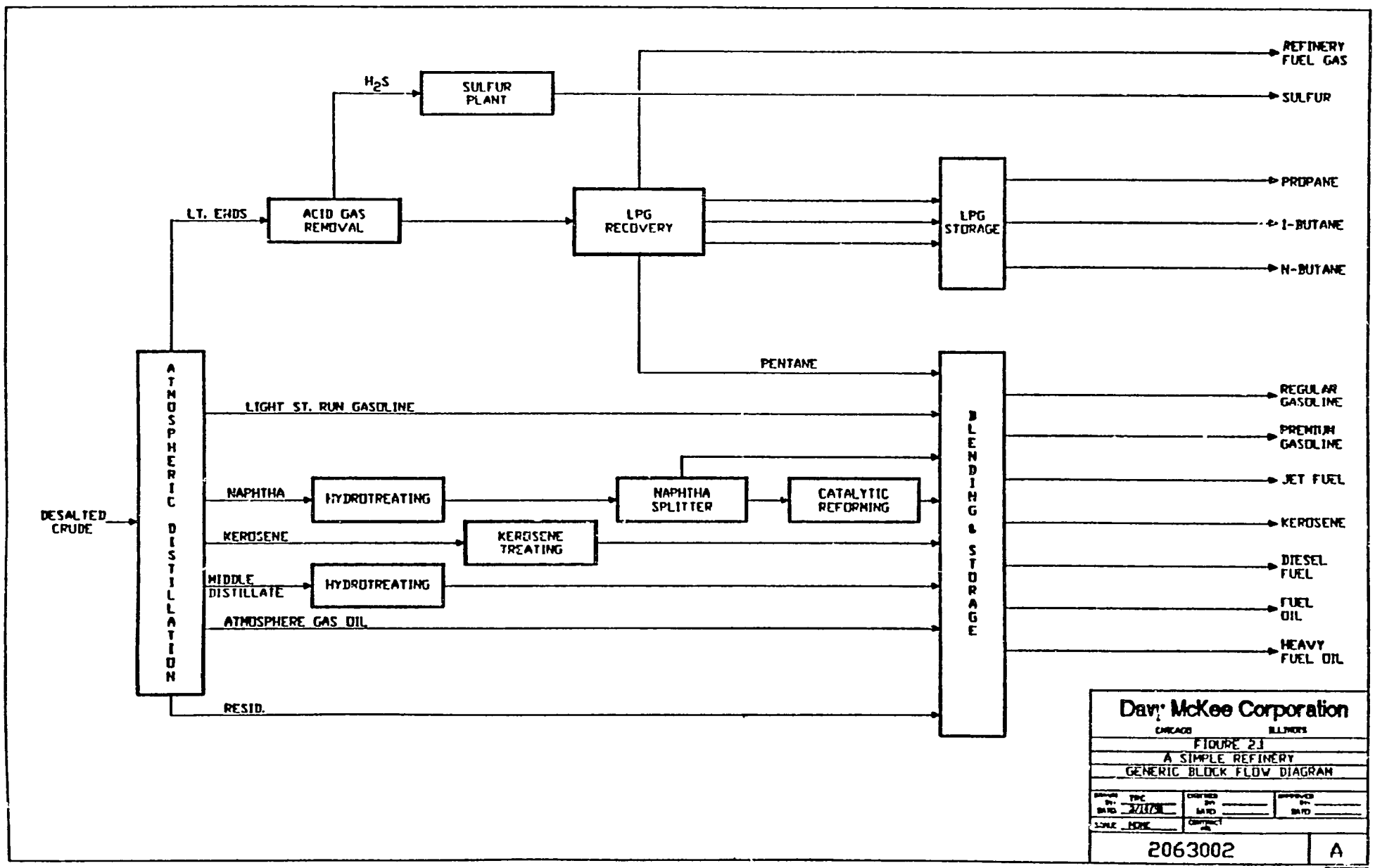
DESALTED CRUDE
ATMOSPHERIC DISTILLATION
LT. ENDS
ACID GAS REMOVAL
H_2S
SULFUR PLANT
LPG RECOVERY
LPG STORAGE
REFINERY FUEL GAS
SULFUR
PROPANE
I-BUTANE
N-BUTANE
PENTANE
LIGHT ST. RUN GASOLINE
NAPHTHA
HYDROTREATING
NAPHTHA SPLITTER
CATALYTIC REFORMING
KEROSENE
KEROSENE TREATING
MIDDLE DISTILLATE
HYDROTREATING
ATMOSPHERE GAS OIL
RESID.
BLENDING & STORAGE
REGULAR GASOLINE
PREMIUM GASOLINE
JET FUEL
KEROSENE
DIESEL FUEL
FUEL OIL
HEAVY FUEL OIL
Davy McKee Corporation
CHICAGO ILLINOIS
FIGURE 2.1
A SIMPLE REFINERY
GENERIC BLOCK FLOW DIAGRAM
2063002
A

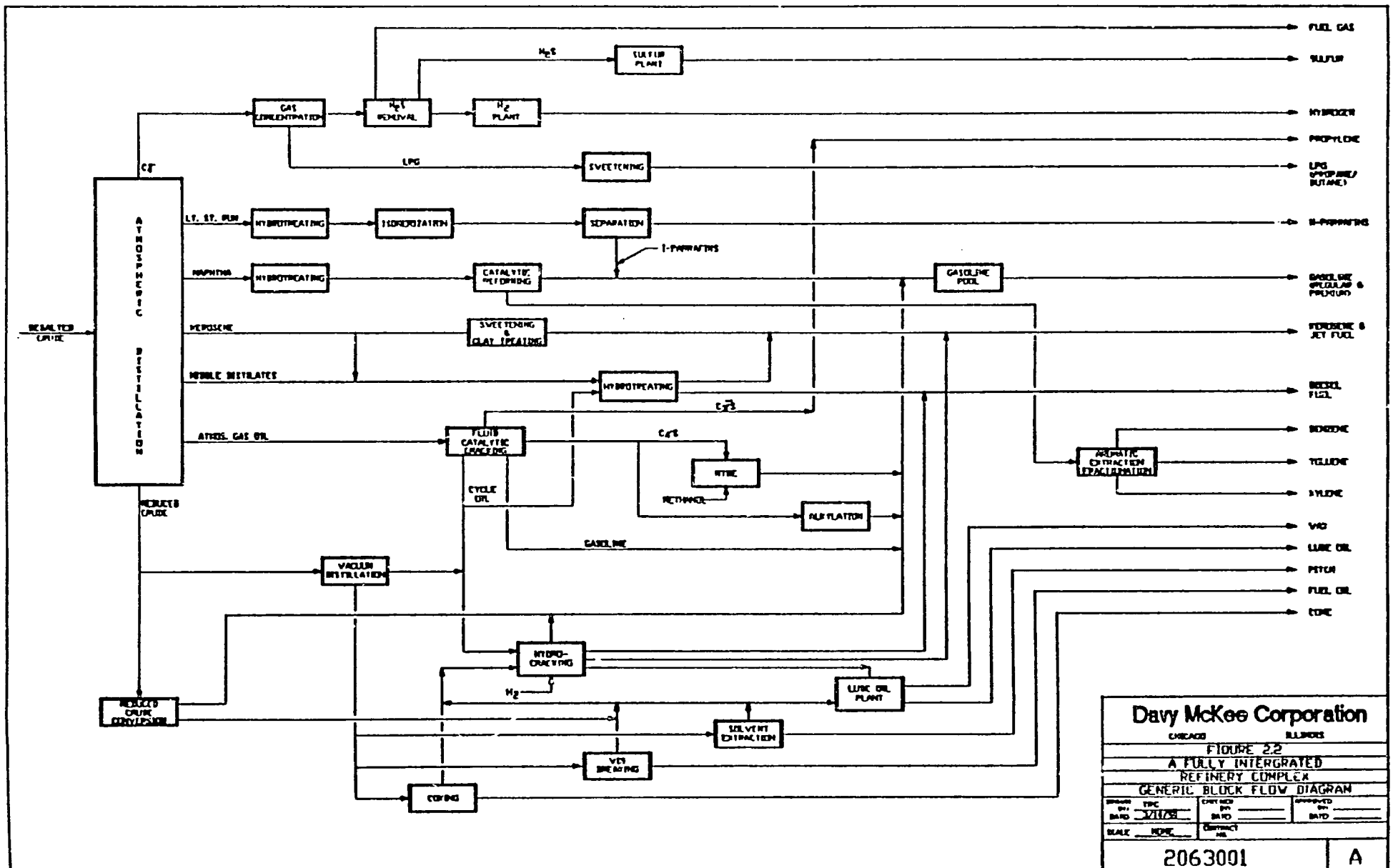
Davy McKee Corporation
CHICAGO ILLINOIS
FIGURE 2.2
A FULLY INTERGRATED
REFINERY COMPLEX
GENERIC BLOCK FLOW DIAGRAM
2063001
A
ATMOSPHERIC DISTILLATION
RESULTED CRUDE
REDUCED CRUDE
GAS CONCENTRATION
H_2S REMOVAL
H_2 PLANT
SULFUR PLANT
LPG
SWEETENING
LT. ST. RUN
HYDROTREATING
HYDROGENATION
SEPARATION
I-PARAFFINS
NAPHTHA
CATALYTIC REFORMING
GASOLINE POOL
KEROSENE
SWEETENING & CLAY TREATING
MIDDLE DISTILLATES
ATMOS. GAS OIL
FLUID CATALYTIC CRACKING
CYCLE OIL
MTBE
METHANOL
ALKYLATION
GASOLINE
AROMATIC EXTRACTION FRACTIONATION
VACUUM DISTILLATION
HYDRO-CRACKING
LUBE OIL PLANT
SOLVENT EXTRACTION
VBS BREAKING
COKING
FUEL GAS
SULFUR
HYDROGEN
PROPYLENE
LPG (PROPANE/BUTANE)
N-PARAFFINS
GASOLINE (REGULAR & PREMIUM)
KEROSENE & JET FUEL
DIESEL FUEL
BENZENE
TOLUENE
XYLENE
VGO
LUBE OIL
PITCH
FUEL OIL
COKE

3.0 PROPERTIES AND SPECIFICATIONS OF FEEDS AND PRODUCTS

3.1 Feeds to Refinery

3.1.1 For Crude Oil (or oils) processed, provide properties for each of the crude oils processed as indicated in Table 3-1.

In addition to Table 3-2, the following would be required (for each crude oil) to perform analysis of atmospheric crude distillation:

1. TBP Curve, with mid-volume plots of gravity, viscosity, and sulfur.
2. Light ends analysis up through hexanes.
3. Characterization factor (UOP or Watson k) for whole crude.
4. For vacuum unit (if it exists), provide vacuum distillation (D-1160) for residua.

TABLE 3-1 CRUDE OIL PROPERTIES

Crude Name Source (Country)				
Crude Inspection				
Gravity, °API				
Sulfur, Wt. %				
Pour Point, °F				
Viscosity, cs at 130°F				
Conradson Carob, Wt. %				
Asphaltenes & Resins, Vol. %				
Metals, Ni + Va, PPM				
Gasoline, C-405°F (C5-207°C)				
Yield, Vol. %				
Sulfur, Wt. %				
Octane, F-1, 3 ml TEL				
Light Gas Oil, 405-650°F (207-344°C)				
Yield, Vol. %				
Gravity, °API				
Sulfur, Wt. %				
Pour Point, °F				
Characterization Factor				
Heavy Gas Oil, 650-1000°F (344-538°C)				
Yield, Vol. %				
Gravity, °API				
Sulfur, Wt. %				
Viscosity, cs at 130°F				
Wax Content, Wt. %				
Characterization Factor				
Residuum 1000°F PLUS				
Yield, Vol. %				
Gravity, °API				
Sulfur, Wt. %				
Viscosity, cs at 210°F				
Viscosity Index of Dewaxed Lubricating Oil				

3.1.2 Properties and Specifications of Feeds other than Crude Oil

Provide properties of following (if available, also provide the source):

a. Fuels (oil, gas, or coal)

b. Inert gas (Nitrogen)

c. Treating chemicals (for water, steam, cooling tower, wastewater, etc.)

d. Corrosion inhibitors

e. Other chemicals used in the processing (e.g., Caustic, Sulfuric Acid, Carbon Tetrachloride, Sufiding Agents, Amines, etc.)

f. Catalysts (specify source and specification)

g. Gasoline additives, e.g, MTBE and TEL., etc.

h. Lube oil additives

3.2 PROPERTIES AND SPECIFICATION OF PRODUCTS

Indicate the following properties of various products:

LPG (LIQUEFIED PETROLEIUM GASES) TABLE 3-2

Composition	PROPANE	BUTANE	LPG
Vapor Pressure at 100°F			
Volatile Residue,			
Butane and Heavier, LV % (Max)			
Pentane and Heavier, LV% (Max)			
Residual Matter			
Corrosion, Copperstrip, Max.			
Total Sulfur, ppmw			
Moisture Content			
Free Water Content			
If Bottled at Refinery?	YES/NO	YES/NO	YES/NO

GASOLINES TABLE 3-3

TYPE GRAVITY	REGULAR	PREMIUM
Octane Number RON MON		
Distillation, Volume 10% 50% 90% EP		
Distillation Residue, % Wt.		
RVP		
Sulfure Content, % Wt.		
MTBE Content, % Vol.		
TEL Content (if any)		

JET FUELS (AVIATION FUEL) TABLE 3-4

TYPE GRAVITY		
Distillation, Volume IBP 10% 50% 90% EP		
Distillation Residue, % Wt.		
Viscosity		
Aniline Point		
Freeze Point		
Flash Point		
Total Sulfur, Wt. %		
Mercaptan, Wt. %		
Aromatic Content, Vol. %		
Doctor Test		
Smoke Point		
Gum mg/100 ml		
Net Heat of Combustion		

DIESEL FUELS TABLE 3-5

TYPE GRAVITY		
Distillation, Volume IBP 10% 50% 90% EP		
Viscosity		
Pour Point		
Flash Point		
Sulfur Content, ppmw		
Carbon Residue		
Ash		
Water and Sediment, % Vol.		
Corrosion, Copper Strip		
Cetane Number, Min.		

FUELS OILS TABLE 3-6

TYPE GRAVITY		
Distillation, Volume 10% 90%		
Viscosity		
Flash Point		
Pour Point		
Sulfur, % Wt.		
Carbon Residue %		
(on 10% bottoms)		
Ash, % Wt.		
Corrosion, Copper Strip		

3.2.6 Provide properties and specifications of any other product from the refinery, such as, sulfur, lube oils, pitch, greases, coke, asphalts, road oils, tars, solvents, petrochemicals and aromatic feed stocks produced in the refinery, etc.

4.0 REFINERY PROCESS UNITS

See LP Data Base in Appendix.

5.0 UTILITY INFORMATION

5.1 Steam System (and Hot Oil System, if it exists)

Provide details of on-site steam generation, i.e., type of boiler (gas, oil, or coal fired).

Provide Boiler Capacity and steam quality.

Provide details of Boiler Blowdown disposition.

5.1.1 Systems may be identified in general terms such as High Pressure, Medium Pressure, Low Pressure, etc., or as nominal pressure levels such as 600 PSIG, 150 PSIG, etc.

Minimum steam pressures and temperatures are the lowest pressures and temperatures which may be expected at any point in the area header.

Normal steam pressures and temperatures are the pressures and temperatures which may be expected at any point in the area header.

Maximum steam pressures and temperatures are the highest pressures and temperatures which may be expected at any point in the area header.

Design pressures and temperatures are the conditions specified for the mechanical design of piping and equipment.

System Identification	Pressure				Temperature			
	Min.	Norm.	Max.	Design	Min.	Norm.	Max.	Design

5.1.2 Condensate Systems

If there are more than one condensate systems, describe each separately.

The typical condensate system may contain a drum or receiver, anywhere in the refinery.

The condensate is pumped from the receiver to a polishing system at the boiler plant.

5.1.3 Hot Oil System

Provide details of Hot Oil System (or belt), if used in the refinery.

Provide specifications of the hot oil used.

5.2 WATER SYSTEM

5.2.1 Is raw water used directly as cooling tower make-up water? YES/NO

5.2.2 Describe the treatment of raw water for the following uses and provide generical names of chemicals used:
(1) potable water,
(2) water used for purposes other than BFW and cooling tower.

5.2.3 Boiler Feed Water (BFW)

Provide the following information about the chemical treating used in steam generators and corrosion control treatment for steam and condensate systems.

WATER TREATMENT TABLE 5-2

System Identification	Method of Feeding And Location of Feed Point	Chemicals Used

5.2.4 Cooling Water System(s)

Describe the Cooling water system. If more, then one, describe each system and identify the units it serves. For each system, provide the following:

If it is a once through type system, provide the source of the cooling water. Provide the type of treatment and chemicals used.

If it a closed cooling water system, provide the type and number of cooling towers. Identify the generic names of chemicals used for treatment.

Provide the destination of the cooling tower blowdown.

Provide the capacity of the cooling water pumps and indicate number of operating and spare pumps. Indicate, if any, steam turbine driven pump is installed.

5.2.5 Provide following information on water system

WATER SYSTEMS TABLE 5-3

DESCRIPTION	REFINERY RAW WATER SUPPLY	ONCE-THROUGH COOLING WATER	CIRCULATING COOLING WATER	TREATED BOILER FEEDWATER
Source				
Supply Temperature, °____				
Supply Pressure, _____ At battery Limits at Grade				
Return Pressure, _____ At battery Limits at Grade				
Exchanger Inlet Water Temperataure, ° _____				
Exchanger Outlet Water Temperataure, ° _____ (Max)				
Exchanger Water Side Design Temperataure, ° _____				
Exchanger Water Side Design Pressure, _____				
Fouling Resistance _____				

WATER ANALYSIS TABLE 5-4

DESCRIPTION	REFINERY RAW WATER SUPPLY	ONCE-THROUGH COOLING WATER	TREATED BOILER FEEDWATER
pH			
Total Hardness as $CaCO_3$, PPM			
Calcium as $CaCO_3$, PPM			
Magnesium as $CaCO_3$, PPM			
"P" Alkalinity as $CaCO_3$, PPM			
Sulfate as SO_4, PPM			
Chloride as Cl, PPM			
Silica as SiO_2, PPM			
Iron as Fe, PPM			
Total Dissolved Solids, PPM			
Suspended Solids, PPM			
Turbidity, PPM			
Conductivity, MicroMHOS/CM			

5.3 REFINERY FUEL SYSTEM

Provide a description of the refinery fuel system. Indicate the amount and type of fuel being imported into the refinery.

5.3.1 Coal as Fuel
If coal (or coals) is used as a fuel, provide complete analysis and net heating value. Describe current coal receiving, storage, handling and preparation systems. Indicate if coal is the primary or supplemental fuel.

5.3.2 Liquid Fuels
If liquid fuels, such as, LPG, Naphtha, Fuel Oils, etc., are used as fuels, provide descriptions of the systems. The system may include receiving, storage, pumping and distribution.

5.3.3 Fuel Gas
Provide a description of the fuel gas system, i.e,, fuel gas drum, operating conditions and distribution.

Indicate the properties of pilot gas if not supplied from the refinery fuel gas header, (i.e., imported into the refinery).

A. Is the existing fuel gas system steam traced? YES / NO

B. Is the existing fuel gas system provided with local liquid knockout drum? YES / NO

5.4 ELECTRICAL POWER

Describe the on-site power generation, i.e., type of turbo-generato and its driver.

If power is imported, indicate the source.
Describe the overall electrical system, including stepdown, distribution, load shedding, reliability, etc.

Provide information on emergency generator.

Provide the following information relating to the electrical power system:

ELECTRICAL POWER TABLE 5-6

SERVICE	HORSEPOWER RANGE		NAME PLATE VOLTAGE	PHASE	FREQUENCY (HERTZ-Hz)
	FROM	TO			
MOTORS					
INSTRUMENTS					
LIGHTING					

FUEL GAS DATA TABLE 5-5

PROPERTY	SOURCE	
	REFINERY	IMPORTED
Composition (Volume %)		
H2S		
H20		
CO		
CO2		
O2		
N2		
H2		
C1		
C2=		
C2		
C3=		
C3		
C4=		
C4		
iC4		
nC4		
C5=		
iC5		
nC5		
C6+		
TOTAL	100%	100%

5.5 PLANT AND INSTRUMENT AIR

Provide the capacity and type of air compressors, coolers and driers. Indicate the sparing policy.

Does system furnish oil free air? YES / NO

Indicate dew point for instrument air; ___°_____.

Indicate system header pressure; _____.

5.6 REFRIGERATION SYSTEM

Provide the type and capacity of the refrigeration system, if any.

Indicate the refrigerant used.

5.7 INERT GAS SYSTEM

Indicate the source of inert gas and its quality.

If on-site inert gas generation is available, provide details of the equipment, capacity, etc.

6.0 OFF-SITE FACILITIES

The refinery off-site facilities normally include the following:

6.1 Flare and Blowdown Systems.
Provide size (Tip Diameter) and height of flare stack (or stacks), drums and header sizes.

Provide the size of the condensate return system including pump, hydrocarbon knockout drum, etc.

Provide sizes of ground flares, if any.

6.2 Flue Gas Treatment (if any).
Provide description and capacity of the unit. If it is a licensed unit, provide the name of licensor.

6.3 Waste Disposal.
Provide description of waste disposal in terms of solids, liquid and gaseous streams.

If coal is used as fuel, describe treatment and disposition of ash.

6.4 STORAGE, BLENDING AND TRANSFER

6.4.1 Provide storage capacities for all feeds into the refinery. Major feeds to the refinery are crude oils from various sources. In addition, refinery may have feeds in terms of treating chemicals, catalysts, corrosion inhibitors, inert gases, methanol, MTBE, fuel oil, fuel gas, solvents, etc.

6.4.2 Provide storage capacities of all products, including all intermediate storage. Products from an integrated refinery may include: LPG, gasolines, kerosene, jet fuel, diesel fuel, aromatic, lube oils, fuel oils, etc.

6.4.3 Besides capacities, provide the size and type of storage vessels and tanks. For example, LPG storage could be in bullets, spheres or atmospheric (refrigerated) tanks, gasoline could be in fixed or floating roof tanks.

6.4.4 Provide description and capacities of various blending units, i.e., gasoline, fuel oil, etc.

6.4.5 Indicate the mode of transportation for feeds and products, i.e., pipeline, truck, or railroad.

6.5 Fire Protection Equipment

Provide details of fire protection equipment.

7.0 OPERATING COST DATA

Provide estimated variable costs of the following: (Note 1)

- Electrical Power
- Fuel
- Raw Water
- Treating Chemicals (Boilers, Cooling Water etc.)
- Catalysts
- Steam
- Cooling Water
- Additives for Gasolines
- Additives for Lube Oils
- Crude Oils
- Products
- Other Chemicals
- Etc.

NOTE 1: At least some cost data, in appropriate units, is required in order to conduct any techno-economic evaluation.

Davy McKee

8.0 ENVIRONMENTAL SURVEY

Emergency Energy Program for East & Central Europe
Davy McKee Job No, 2063

I. WATER SUPPLY

A. Process Water.

1. Source: _____

_____

2. Capacity: _____ L/M

3. Chemical Quality- as used:

TEST	Units	TEST	Units
TDS	_____	OIL/GREASE	_____
TSS	_____	PHENOL	_____
COD	_____	AMMONIA	_____
BOD	_____	CHROMIUM	_____
TOC	_____	ZINC	_____
pH	_____	SULFITES	_____
Fe	_____	HARDNESS	_____

4. Pretreatment before use:
   a. pH control. _____
   b. Settling. _____
   c. Flocculation/Sedimentation. _____
   d. Filtration. _____
   e. Other. _____

B. Drinking Water.

If a different source than (I-A) above, complete same information as requested in (I-A-1) through (I-A-4-e).

1. Source: _____

_____

2. Capacity: _____ L/M

3. Chemical Quality- as used:

TEST	Units	TEST	Units
TDS	_____	OIL/GREASE	_____
TSS	_____	PHENOL	_____
COD	_____	AMMONIA	_____
BOD	_____	CHROMIUM	_____
TOC	_____	ZINC	_____
pH	_____	SULFATES	_____
Fe	_____	HARDNESS	_____

4. Pretreatment before use:

a. pH control. _____
b. Settling. _____
c. Flocculation/Sedimentation. _____
d. Filtration. _____
e. Other. _____
_____

C. Cooling Tower Water:

1. Source of water _____
2. If same as (I-A) or (I-B) above:
   a. Once through. _____
   b. Cooling tower loop. _____

3. Additional pretreatment other than (I-A-4) or (I-B-4)? Define. _____
_____

4. Recycle water treatment:
   a. Corrosion control. _____
   b. Biocides. _____
   c. TDS of recycle/blowdown _____

5. Recycle rate _____ L/M

6. Make-up rate _____ L/M

7. Blowdown rate _____ L/M

8. Blowdown discharge to: _____

D. Boiler Feed Water.

1. Source: _____
_____

Davy McKee

2. BFW Treatment:

   a. Softening: Resin_____ Lime_____
   b. R.O._____
   c. Ion Exchange. _____
   d. Waste heat distillation._____

3. Water Treatment Chemicals:

   a. H_2SO_4 _____
   b. HCl _____
   c. NaOH _____
   d. Na_2SO_3 _____
   e. H_2NNH_2 _____
   f. Phosphates _____
   g. Other _____

4. Regenerant discharge: _____L/cycle_____cycles/day

   To:_____

5. Blowdown discharge rate:_____L/M_____To

Davy McKee

II. STORM WATER

A. Tank Storage Areas.

1. Tank areas diked to prevent the spread of oil leaks?
   Yes_____ No_____

2. Capacity of the diked area verses the capacity of largest tank?
   1:1 1:1.1 1:1.25 other _____

3. Inside of dike: earth: concrete: plastic liner.

4. Method of removing the trapped oil/water?_____
   _____

5. Oil skimming provided? Yes _____ No _____

B. Process Area.

1. Area curbed to prevent rain water run on? Yes ___ No ___

2. Disposition of the rain water falling on the process area?_____
   _____

3. Are the following leaks/drains contained?

   a. Pump seals: Yes __ No __
   b. Valve stems: Yes __ No __
   c. Flanges: Yes __ No __
   d. Sample line drains: Yes __ No __
   e. Tank overflow lines: Yes __ No __
   f. Pump casing drains: Yes __ No __
   g. Control valve drains: Yes __ No __
   h. Heat exchangers: Yes __ No __

C. Roadways, Parking Lots & Roof Drains.

1. Are these rain water flows separated from A & B above?
   Yes __ No __

2. If No above, could they be separated at a reasonable cost?
   Yes __ No __

D. Stormwater Treatment. Define for each system.

1. No treatment. _____

2. (A), (B), (C) above treated? (circle which).

3. Treatment.

   a. Lagoon with oil skimming. _____
   b. Biological treatment._____
   c. Held for Plant make-up water._____
   d. Other - define on separate page._____

4. Chemical quality of outlet water.

   a. TSS_____
   b. TDS _____
   c. Fats/Oils/Grease _____
   d. BOD _____
   e. COD _____
   f. pH _____
   g. Discharged to _____

III. ON-SITE WATER SYSTEMS

A. Attach a sites plan showing the locations and routing of the following:

1. Roof drain sewers.
2. Roadway and Parking lot sewers.
3. Open area catch basins and sewers.
4. Storage tank area drains and sewers.
5. BS&W drain/sewers.
6. Process water drain/oily sewers.
7. Process area stormwater sewers.
8. Sour water piping and sewers.
9. Wastewater treatment units.
10. Solid waste storage/disposal sites.
11. Water supply.
12. Barometric condenser drains.

B. Attach block flow diagrams of any wastewater treatment systems on any of the above sewers or combinations of sewers. Show-

1. Pump stations.
2. Equalization basins.
3. Flow control devices.
4. Chemical additions.
5. Oil skimming.
6. Settled solids removal.
7. Air/steam stripping.
8. Aeration area for chemical oxidation.
9. Biological treatment BOD/COD.

10. Effluent equalization.

11. Points of water discharge to off-site.

12. Sample locations.

    a. Flow rates.
    b. Chemical quality. (I-A-3)

13. Any current recycle system.

14. Any recycle system being considered.

Davy McKee

IV. WASTEWATER TREATMENT

A. For each major unit shown on the block flow diagrams (III-B) give the critical data:

1. Volume. _____

2. Length, width & liquid depth. _____

3. Pump rates. _____

4. Water quality in/out. (I-A-3) _____

5. Chemicals added. _____

6. Method of sludge disposal. _____

   a. Quantity. _____cu. m.
   b. Frequency. _____

7. Method of skimmed oil disposal. _____

8. Design flow rates. _____

9. Energy consumed at each unit. _____

B. Provide process flow diagrams showing the typical Chemical Engineering parameters.(If available)

V. NOISE LEVEL

During the Characterization, Evaluation and the Environmental visits, those areas for observed excessive noise levels will be noted. no field measurements are to be made at this time. If simplified and economical method of control is evident to the Team, this will be noted as defined. If the excessive noise is due to a complex of sources, this will be noted for potential future study.

Davy McKee

VI. SOLID WASTE

A. Crude tankage silt.

1. Quantity and frequency of removal. _____

2. Method of disposal. _____

B. Atm./Vacuum still bottoms.

1. How used? _____

2. How disposed? _____

C. FCC fines/spent catalyst.

1. How collected? _____

2. How disposed? _____

3. Quantity? _____

D. Spent caustic.

1. Quantity? _____

2. How disposed? _____

E. Water treatment sludge.

1. Quantity? _____

2. How disposed? _____

Davy McKee

F. Oil/water separator.

1. Quantity of oil and how disposed? _____

2. Quantity of sludge and how disposed? _____

G. Wastewater treatment sludge.

1. Quantity? _____

2. How disposed? _____

H. Boiler system.

1. Fly ash quantity and how disposed? _____

2. Bottom ash quantity and how disposed? _____

123

Davy McKee

VII AIR POLLUTION

A. **Benzene:**

Benzene has been defined as a carcinogenic substance. If the Evaluation Team suspects the presence of Benzene, a MSA benzene tube tester will be used. The tube tester will only confirm the presence of 2 - 150 ppmv at the time of sampling. Those areas suspect and tested shall be noted and the results recorded. Before control systems can be designed, an in depth study must be conducted.

B. Storage tanks:

1. Crude: (Vapor pressure) _____

   a. Covered _____ Uncovered _____
   b. Capacity _____ cu.m
      i. Diameter _____ m
      ii. Height _____ m
   c. Number _____
   d. Vent control:
      i. None. _____
      ii. Conservation valve. _____
      iii. Carbon adsorption. _____
      iv. Flare system. _____

2. Light ends: (Vapor pressure) _____

   a. Covered _____ Uncovered _____
   b. Capacity _____ cu.m
      i. Diameter _____ m
      ii. Height _____ m
   c. Number _____
   d. Vent control:
      i. Conservation valve. _____
      ii. Carbon adsorption. _____
      iii. Flare system. _____
      iv. Other _____ Define _____

3. Middle Distillate: (Vapor Pressure) _____

   a. Covered _____ Uncovered _____
   b. Capacity _____ cu.m
      i. Diameter _____ m
      ii. Height _____ m
   c. Number _____

12

d. Vent control:
   i. Conservation valve. _____
   ii. Carbon adsorption. _____
   iii. Flare system. _____
   iv. Other _____ Define _____

4. Resid: (Vapor Pressure)_____

   a. Covered _____ Uncovered _____
   b. Capacity _____cu.m
      i. Diameter _____ m
      ii. Height _____ m
   c. Number _____

   d. Vent control:
      i. Conservation valve. _____
      ii. Carbon adsorption. _____
      iii. Flare system. _____
      iv. Other _____ Define _____

C. Heaters (complete for each heater & boiler):

1. Unit number. _____

2. Fuel. _____

3. Fuel composition - attach a copy.

   a. J/gm _____ HHV
   b. Sulfur content. _____%
   c. Ash content. _____%
   d. Moisture content. _____%

4. Firing rate. _____ Kg/Stream Hr.

5. Pollution control:

   a. Particulate:
      i. Type. _____
      ii. Efficiency. _____%
   b. Sulfur:
      i. Type. _____
      ii. Efficiency. _____%
   c. NO_x
      i. Type. _____
      ii. Efficiency. _____%
   d. CO:
      i. Type._____
      ii. Efficiency. _____%

D. Sulfur recovery:

1. Yes _____ No _____

2. If yes, recovery: _____

$$\frac{\text{Total S Recovered}}{\text{Total S to refinery}}$$

3. Process name: _____

E. NO_x & SO_x

MSA sample tube testers are provided to the Evaluation Team. The NO_x level is 0.5 - 50 ppmv and the SO_x level is 1-150 ppmv. These tubes will only confirm the presence of the pollutant at the time of sampling. Before any design can be performed, a detailed sampling program must be completed.

F. Process losses.

1. Define the flows to the flare. _____

2. Define the type of flare. _____

3. Flare burning control. _____

4. Frequency of "sniffing" the valve stems, flanges, pump & compressor seals, and the pressure control valves? _____

5. Define other hydrocarbon vent losses not routed to carbon adsorber or the flare. _____

6. Estimate the number of each of the following:

a. All process streams:

i. Open ended valves. _____

ii. Process drains. _____

b. Gas streams:

i. Open ended valves. _____

ii. Process drains. _____

c. Light liquid & gas/liquid:

i. Open ended valves. _____

ii. Process drains. _____

d. Heavy liquids:

i. Open ended valves. _____

ii. Process drains. _____

e. Hydrogen stream:

i. Pipe line valves. _____

ii. Compressor seals. _____

G. Fuel Costs at the refinery:

a. Fuel gas: _____
b. Natural gas: _____
c. LNG: _____
d. LPG: _____
e. Brown coal: _____
f. Soft coal: _____

H. Solid fuels:

Collect a copy of a "typical" ultimate fuel analysis.

Davy McKee

9.0 MISCELLANEOUS INFORMATION

9.1 Battery Limit Requirements

9.1.1 Indicate the following battery limit information for streams, including hydrocarbon and chemicals, entering the refinery.

INCOMING STREAM	SOURCE	PRESSURE ____	TEMP ____

9.1.2 Indicate the following battery limit information for outgoing streams:

OUTGOING LIQUID STREAM	DESTINATION	DESTINATION PRESSURE ___	DESTINATION TEMP. ___

10.0 INSTRUMENTATION

Describe the refinery instrumentation in general. Provide a listing of the symbols used to indicate controls in Piping and Instrument Diagrams.

10.1 General Control Concept/Philosophy

10.1.1	Is Refinery control Centralized?	Yes	
10.1.2	Does Refinery have both centralized control and unit centralized control?	Yes	No
10.1.3	Does refinery only have control at the unit level?	Yes	No
10.1.4	Is control at the unit all local?	Yes	No

10.2 Instrument Type

10.2.1 Control Room Type

1.	Pneumatic?	Yes	No
2.	Electronic?	Yes	No
3.	Distributed Control?	Yes	No
4.	PLC?	Yes	No
5.	Main Frame Computer?	Yes	No
6.	CRT Based?	Yes	No
7.	Panel Mounted Based?	Yes	No

10.2.2 Field Instrumentation Type

1.	Pneumatic?	Yes	No
2.	Electronic?	Yes	No

11.0 MECHANICAL EQUIPMENT INFORMATION

See Data Base for Physical Characteristics in Appendix.

Davy McKee

APPENDIX

A. Refinery Organization Chart

B. Overall Refinery Plot Plan

C. Summary of Last 12 Months Operation

D. Spare Parts Policy and Description of Current Maintenance Facilities

E. Loss Analysis

F. LP Data Base

G. Physical Characteristic of Refinery

APPENDIX B. PILOT PRIVATIZATION RATIONALIZATION STRATEGY STUDY EXCERPTS

(Prepared by M. Stewart for Davy McKee)

1. INTRODUCTION

A preliminary survey and analysis of the Oil Refining and Marketing portion of the Bulgarian Energy Sector was conducted to identify structural shifts, steps that might facilitate privatization and areas where technical assistance and financial assistance might be warranted. The World Bank recently approved a $150 million loan to Bulgaria, primarily for needed hard currency working capital for crude and fuel oil purchases. Recently, USAID sponsored an evaluation by Davy McKee of the two principal refiners to identify areas where energy savings could be implemented, where new capital investments might be justified and where the environmental impact of refinery operations could be reduced.

2. DISTRIBUTION AND MARKETING

The distribution and marketing monopoly for major refined products is Petrol, a state owned company, with 530 service stations retailing gasoline, diesel and lubes. Average volume is 3 000 tonnes/y of gasoline (80 000 gallons / month) with about 30% averaging 4 500 tonnes/y (125 000 gallons / month). Volume per station is relatively high and long lines to buy gasoline at Petrol stations in Sofia are common. Some stations are shut down for lack of gasoline supply.

Petrol has 105 depots / terminals located near the major towns throughout the country with storage capacity for gasoline and diesel ranging from 1 500 cubic meters to 250 000 cubic meters (400 000 US gallons to 65 million US gallons). Total capacity is 2.5 million cubic meters (650 million US gallons). This is equivalent to around 50 days of sales and is more than adequate. Bourgas also stores heavy fuel oil at selected depots. Gasoline, diesel and fuel oil are supplied from Bourgas to the depots by rail. A pipeline connects Bourgas to the large Sofia depot but only carries diesel. Trucks are used to move product from the depots to the stations and to large customers. Prices of retail gasolines, diesels and fuel oils are set monthly by the State according to a formula. A fixed margin for distribution and marketing is allocated to Petrol. The prices set by the State are based on Mediterranean spot product prices plus freight, duty and taxes. This results in a tight margin for the refineries. Jet fuel, asphalt, lubes, etc. are priced by the refineries with a ceiling of estimated refining cost plus a specified percentage.

3. REFINERIES

3.1 Bourgas

The Neftochim refining-chemical complex at Bourgas is the major source of refined products for Bulgaria. The 12 million metric ton per year cracking refinery with petrochemical and plastic derivative plants has an effective capacity of about 7 million tonnes/y due to the bottleneck of the Fluid Catalytic Cracking Unit (FCC). Further crude capacity utilization is simply topping / crude distillation processing.

Unit	Capacity	
	10^6 tonnes/y	10^3 BPSD
Atmospheric Distillation	12.0	235
Vacuum Distillation	3.7	80
Catalytic Reforrning	0.8	20
Hydro-Treating	1.1	30
Catalytic Cracking	1.5	32
Alkylation	0.2	5
Visbreaking	1.5	32
MTBE	0.08	0.2

Crude throughput was about 12 million tonnes in 1988 and 1989, 7.5 million tonnes in 1990 and is estimated at 6 million tonnes in 1991. This is due to reduced Soviet deliveries, the country's limited ability to buy crude and reduced product demand. Today, half the crude is from the USSR (medium sweet) and half through a processing agreement with an international trading company (light sweet and heavy sour). Export products are mainly unleaded gasoline and medium sulfur diesel.

Electric power is purchased from the state grid or else generated on site. Water is pumped from a nearby lake and the effluent water, after treatment, is pumped back downstream eventually flowing to the Black Sea Effluent water quality does not conform to the relatively strict state regulations. Sulfur content of atmospheric emissions is relatively high. A cost / benefit analysis should be conducted to determine the justification of changing from burning medium sulfur fuel to burning low sulfur fuel or investing in an expensive residual oil desulfurizer.

3.2 Pleven

This is essentially a lube refinery which also makes some gasoline, diesel, fuel oil and asphalt. The 1.2 million tonnes/y refinery will only run about 0.8 million tonnes/y in 1991, primarily due to reduced lube demand.

Unit	Capacity	
	10^6 tonnes/y	10^3 BPSD
Atmospheric Distillation	1.2	26
Vacuum Distillation	0.6	11.5
De-asphalting	0.2	3.5
Phenol Extraction	0.4	7.0
Dewaxing	0.28	6.5
Hydro-treating	0.22	5.1
Blending Lubes	0.21	4.2
Catalytic Reforming	0.3	6.5

This refinery was designed to run local low sulfur crude, but little was discovered. Low sulfur light crude is shipped to Bourgas, transferred to a smaller tanker, shipped to Varna, transferred to rail cars and moved to the refinery. Heavy naphtha and vacuum residue are railed to Pleven from the Bourgas refinery for reformer feed and asphalt production, respectively. Export base oils are trucked to the Danube and shipped by barge. Export wax is railed out. Electrical power is generated on site and surplus power is sold into the state grid.

3.3 Russe

This refinery is very small and is scheduled to be shut down. 100 000 tonnes/y local crude is processed. Used lube oil was processed by recycling into base oils. The used oil will, in the future, be blended into residual fuel oil.

3.4 Chemicals

The chemical complex at Bourgas is based on an ethylene cracker and an aromatics reformer, both feeding naphtha.

Petrochemicals produced include: Butadene, benzene, toluene, ortho-xylene, para-xylene, styrene monomer, phenol, ethylene glycol, acetone, acetaldehyde, normal paraffins.

Polymers produced include: Polyethylene, polypropylene, polystyrene and styrene-butadiene rubber.

While most of the plants are fairly old and the technology used is not the most up-to-date, product quality is generally good. The products are sold domestically

and also into hard currency export markets. Because of the lack of hard currency for crude oil, Bourgas is entering into process agreements with foreign companies which provide naphtha, pay a processing fee and receive back a mix of chemicals and polymers for export.

A joint venture is being finalized with a foreign group which will provide the hard currency capital to totally modernize an existing chemical plant with the derived product being exported, so enabling the hard currency capital to be repaid as debt or dividends over a period of time.

4. REFINING - DISTRIBUTION - MARKETING - CHEMICALS STRUCTURE

4.1 Old System

The old system in Bulgaria was based on government-to-government crude purchases from USSR, Libya, Iraq and Iran. Hard currency was not an issue. Products were produced for the domestic market with some exports. The primary performance criteria was to satisfy the domestic market with on-specification products. Cost was a very secondary consideration. A monopoly distribution - marketing network was built for gasoline, diesel and fuel oil. A fixed margin was allocated to this monopoly and retail prices were then fixed by the State.

Under the old system, the strategic plan of management was to extend the degree of integration of the Bourgas complex by utilizing refinery products such as propylene, butylene, naphtha and reformate to make primary petrochemicals such as ethylene, propylene, butylene, butadiene, benzene, toluene, xylene, etc. Some of these were in turn converted to secondary petrochemicals such as acetone, phenol, acetaldehyde, styrene monomer, n-paraffins. Some of these were then converted to polymers such as polyethylene, polypropylene, polystyrene and synthetic rubber. Until 1989, most of these were consumed domestically with the rest exported into markets throughout the world. Tight cost control and making a profit were not major considerations.

4.2 New System

The new system in Bulgaria has resulted in a lower amount of government-to-government crude from the USSR with government supplies from Iraq, Iran and Libya sharply reduced. Hard currency is required to buy the remaining required crude but a limited amount is available. A processing deal using around half the effective capacity of the Bourgas refinery was entered into a couple of years ago with an international trading company in which Bulgaria purchases the fuel oil for hard currency allowing unleaded gasoline, diesel and other products to be exported. This provides hard currency revenue (the processing fee) and flexibility in "importing" needed fuel oil to meet domestic demand. The octane of the exported gasoline is relatively low and the sulfur content of the exported diesel is relatively high. This results in lower than normal market prices for these

exported products, and, the market for these exported products is limited. In principle, such processing agreements are more advantageous than direct imports of fuel oil.

From a Bulgarian national interest view point, it is always better to import lower priced crude to make needed refined products then to import higher priced refined products. Less hard currency is required and available refinery capacity is being used. The imbalance between product demand slate and products that can be manufactured (supply slate) results in a continuing need to import fuel oil.

Under the new system with limited hard currency and therefore limited crude availability, few petrochemicals and polymers are available to be exported. Most of the plants are under-utilized. Processing agreements with international companies providing hard currency feedstocks and receiving products would generate hard currency earnings.

It is intended to make Neftochim, Pleven and Petrol shareholder companies (private companies) and reduce monopolization. Privatization of these entities appears to be an excellent strategic goal for Bulgaria. Some of the perceived obstacles to implementing privatization are presented in Appendix I.

During the current transition period:

- Chem-import, a government company, continues to buy the USSR crude, charter tankers, sell Bourgas export chemicals and buy crude and fuel oil under a bid system utilizing the World Bank loan.
- Nefto-Impex, a counterpart company to Chem-Import, handles the Bourgas crude processing agreement. It is owned almost entirely by Neftochim.
- The government sets product prices monthly and so regulates the earnings of Petrol and the refineries.
- Petrol has begun to privatize stations by selling 10-20 to local businessmen.
- The refineries are now planning to market products directly to commercial and industrial customers, bypassing Petrol. Further downstream integration is envisioned.

5. MANAGEMENT STRUCTURE

When these companies become shareholder companies, total responsibility and authority will be given to their managements. Performance criteria should include:

- Minimize raw material cost consistent with quality.

- Reduce refinery, manufacturing and marketing costs by a substantial amount.
- Develop and implement processing agreements and joint ventures.
- Generate positive cash flow excluding depreciation, amortization and interest on deemed current debt.
- Justify new investments on the basis of a short cash flow payout. Leva currencies sources of equipment, materials and engineering should be maximized.
- Pay increasing attention to environmental regulations.
- Try to satisfy domestic product requirements while recognizing that the government has the responsibility to allocate hard currency for crude and / or product imports.
- Maximize hard currency generation.

Top management, and to a lesser degree, middle management, supervisors and hourly workers should be meaningfully rewarded for meeting defined performance criteria.

6. RECOMMENDATIONS

A three phase technical / financial assistance program is recommended to USAID and fellow European agencies and to the World Bank.

In the first phase, a technical assistance plan should be implemented in the following areas:

Refinery and chemical plant operator and supervisor training

After decades of operating under a system where energy minimization and cost minimization were not critical, it is difficult to change quickly. Training programs by experienced senior consultants / operators is vital. Small investments in energy saving monitors and automatic controls will be required. This is a top priority and will last six months.

Accounting training

Training of refinery and chemical plant accountants in the proper way to analyze, record, account for, and monitor costs, and to prepare financial statements is needed. This will take three months.

Simulation computer model

All refinery-chemical complexes need a computer simulation model (linear program) to enable the planners and management to develop good operating plans and evaluate proposed investments. The software can be purchased but the intensive work is in developing, checking, evaluating and installing the appropriate yields and cost elements for each process unit. The program can be run on a personal computer with fairly large hard drive storage. The total time to purchase the software (and perhaps the hardware) plus preparation of the data and final checking of the program will be six months.

Management consulting

All the refining, marketing and chemical companies need to develop a strategic plan taking into consideration the political, economic and business environment they will face in the next five to ten years. In particular, raw material supply, and marketing programs need to be developed and fleshed out. All of this will require outside assistance to the management of these companies. Expected duration is six months.

Further detail of this first phase plan is presented in Section G.

For the second phase, a loan program from the World Bank or an aid program from USAID / European agencies is recommended to provide hard currency funds for the smaller investments in reducing energy utilization and lowering operating costs where the cash flow payout on these investments will be no more than six to twelve months. Total investment is probably less than $10 000. Indigenous equipment and materials use would be maximized.

Large investments which may be justified in the third phase include:

- Bourgas-Refinery
  - New catalytic reformers
  - Waste treatment and clean-up
  - New residue desulfurization

- Bourgas-Chemicals
  - Complete unfinished high density polyethylene plant

- Pleven
  - New crude feed pipeline from Varna
  - New dewaxing plant

Initial feasibility studies of these projects could be included in the second phase.

7. TECHNICAL ASSISTANCE PROGRAM

The mode of operating and managing the Bourgas complex and Pleven refinery over the past decades has been to manufacture refined products and chemical products; i) to satisfy the domestic market demand and insure that the products meet defined specifications, and ii) to export surplus products. There has been limited focus on minimizing cost or earning profits or making a return on investment capital: These latter criteria will be more important because a) feed stock will increasingly be imported with hard currency and; b) a move to privatization will require performance based on profitability.

The refinery and chemical plant operators, supervisors, process engineers, accountants and managers need to be retrained to operate on a comparable basis to Western standards. This will require new tasks to be performed with consequent new training of existing workers. Some capital investment in instrumentation and equipment will be required.

7.1 Refinery and Chemical Plant Operators and Supervisors

7.1.1 Reduce energy consumption

Fuel consumed in furnaces

The existing fired heaters can be operated more efficiently by monitoring and reducing excess air. The operators need to be trained on how to do this. Some instrumentation investment will be required.

Energy efficiency within each unit should be measured, monitored and improved. This requires the making of energy balances for each unit by process engineers and operators to determine ways to improve heating and cooling efficiency using existing heat exchangers, heaters and coolers. This requires training and some instrumentation and may require piping and equipment changes.

7.1.2 Improve Product Fractionation and Product Purification

The downgrading of more valuable products into less valuable products can be reduced. This requires making weight balances and energy balances based on test runs for each unit. This requires training and some instrumentation and may require piping changes.

7.1.3 Improve Recovery of Steam Condensate

Steam and condensate contamination from hydrocarbons can be reduced and condensate recovery back to boiler feed water needs to be drastically improved. This will require training, the use of steam traps and some process piping and equipment modification.

7.1.4 Cost Reduction

There are many areas where costs can be reduced but this will require training of operators and supervisors to identify areas where cost can be reduced. It also requires a focus by management on requiring cost reductions.

7.2 Process Engineers

Improved performance of each process unit

Test runs needs to be made on each process unit making weight and energy balances to help identify process improvements (design and operating), and so increase the economic performance of each plant. This work will also yield the required data needed as input to the linear program simulation computer model for the refining and chemical plants. The model can then be used to evaluate possible improvements and justify any investments required. This requires training, and some instrumentation, piping and equipment modification investments will be needed.

7.3 Crude and Product Supply Operations

Areas where improvements can be made include the selection of crude oils and other feed stocks; the blending of products to reduce quality give-away; and the decision of which products to maximize and which to minimize. This requires use of the linear program simulation model and regular lab analyses of selected refinery and chemical streams. Some training will be required.

7.4 Marketing and Sales

As Bourgas and Pleven move to assuming more responsibility for marketing and selling part of their production to retail and commercial / industrial customers in Bulgaria, marketing and sales personnel should be hired and trained to accomplish this.

7.5 Managers

As well as their existing responsibility, managers will need to develop competence to perform the following functions:

- Make operating plans and performance measurements for each plant with a strong focus on reducing costs, improving efficiency and generating profits and return on existing and new investments. Direct the use of LP simulation models.
- Establish information requirements from accountants, process engineers and operators, for daily, weekly, and monthly evaluation and for input into the LP simulation models.
- Direct the preparation of Operating and Capital budgets for direct evaluation of different feed stocks and products.
- Develop and implement a cost reduction program throughout the entire complex.
- Direct a new program of better housekeeping and better safety.
- Develop a new marketing program including both direct marketing and coordination with Petrol, Chem-Import, Neft-Impex and others.
- Participate in the preparation of a comprehensive medium-long term business plan.

All of the above will require in-depth assistance from outside experts and consultants.

7.6 Accountants

An accounting system needs to be in place in which all elements of cost incurred by each process unit are allocated to that process unit. This includes not only utilities, direct operating costs and direct maintenance costs including turn-around costs, but also the allocation of indirect costs to each process unit. Also, the accounting system should prepare meaningful cost information and profitability information to management to enable them to evaluate the performance of each process unit as well as the total operation. This may require the introduction of a new accounting system. It will require the training of accountants in how to develop, install and implement a meaningful cost accounting system. The information produced will also be used for economic evaluations on proposed feed stock purchases, product sales, processing agreements, etc.

Existing accountants will need to be trained by experienced accountants with refinery and chemical plant experience and knowledge.

7.7 Maintenance Operations

A comprehensive system of maintaining records on each major piece of equipment in the refinery and chemical plants need to be established and maintained which includes inspections of equipment and development of a preventative maintenance program. Information from the Accounting Department will be used to maintain this record. Training is required.

7.8 Sourcing of Assistance

In summary, consultants can be hired to perform each element of the above technical assistance program. One way to employ this is to ask for bids from engineering companies (such as Davy McKee) who in turn will subcontract the hiring of appropriate personnel or companies to perform the different training requirements. Retired refinery and chemical plant operators, supervisors, accountants, process engineers and managers with extensive broad experience would probably be the best source of training personnel. For management and marketing assistance, retired executives or consultants with broad industry experience, or, small petroleum or chemical consulting companies, whose billing rates will not be as high as the large consulting companies, would be good sources of training personnel.

The linear program simulation computer models could be purchased from software / consulting companies which have such programs on the shelf. They will also provide a limited amount of technical assistance in input data preparation and evaluation. They will be able to provide basic input data on similar American or European plants (utilities, cost, yields and specifications).

8. PRIVATIZATION ISSUES

The Bulgarian Government has commenced a program of privatization (selling part or all of state owned companies) to bring competition into the state monopolies. Some of the large international oil companies have long term strategic objectives of participating in the oil and chemical sectors of the newly opened Eastern European Economies, including Bulgaria. However, there are a number of perceived obstacles to these companies making agreements to participate in the privatization process and most importantly to bring in hard currency capital investment into the country.

These perceived obstacles include:

- Repatriation of Profits / Dividends in Hard Currency.

  If the foreign company brings in hard currency investment to buy into or expand existing companies, it needs to have convincing assurance that it will be able to repatriate the dividends (which are an agreed percentage of profits generated) in hard currency. This requires not only a binding

contract with the company but also a guarantee by the government that this would be allowed. The repatriation need not start immediately but after a few years it must be allowed to proceed.

- Collateral

  We understand the privatization process has begun but Parliament has not yet approved it and therefore, foreign companies cannot own land or fixed assets in Bulgaria, they can only own stock in companies which own land and fixed assets. Foreign companies will probably want to have security and collateral of hard assets ownership for bringing in hard currency investments. Presumably, this will be approved shortly.

- Negotiation of Joint Ventures that make Economic Sense

  A joint venture in which the foreign partner brings hard currency to invest in procurement of existing assets and building of new assets should be attractive to Petrol, Neftochim and Plevin, three separate companies. However, the foreign company will most likely want to invest in a downstream integrated operation. Investing in Petrol alone or Neftochim alone or Plevin alone is not as attractive as investing in a combination of marketing, distribution and refining as an integrated operation.

- Government Controlled Prices

  Presently, the Government establishes the ex-refinery prices and the retail prices of gasoline, diesel and fuel oil. Prices of other refined products can be negotiated by the refiner at cost plus the maximum specified percentage markup. The ex-refinery prices are tied to international spot product prices. The crude oil feed to the refineries, including the Russian crude, is tied to international spot crude oil prices. This results in the refinery margin being relatively low and probably insufficient to allow generation of a profit by the refineries. The allowed margin for Petrol appears to be sufficient to allow Petrol to make a profit. Movement to more of a free market pricing is desirable.

- Taxes

  It is very important that the government define the tax regime under which international companies will operate and that a formal agreement be made with these companies limiting changes that can be made in taxes, etc. for an extended period of time.

The types of agreements which might be achieved in order of ease of implementation are:

- Processing Agreement

  Neftochim has an existing agreement under which a foreign company provides crude oil and receives back a negotiated amount of light products (gasoline and diesel), and pays a negotiated processing fee. Also, it has a processing agreement in which a foreign company provides naphtha feed for the ethylene cracker and aromatics reformer and receives back a mix of petrochemicals and polymers and pays a processing fee. More agreements of this type are possible.

- Investment in Stand Alone Plants

  It is relatively straightforward for a foreign company to buy a share of an existing chemical plant in which feed comes from the Buorgas complex and products are sold for export and for domestic consumption. A long term transfer price of feed stock can be negotiated. Similarly prices for products being sold into the domestic market can be defined. The export product prices can either be free market or negotiated contractual prices.

- Company Brings Expertise

  A foreign company may be willing to provide technical expertise, operator training, marketing assistance, management expertise, and some working capital for a part ownership of an existing operation, e.g., a chemical plant. Again, a portion of the products would be sold into the export market.

- Working Capital Investment

  A foreign company as part of an agreement, to have an equity share in a Bulgarian company, may provide hard currency working capital for the purchase of feed stock. The security on the loan would be ownership of the inventory; feed stock and derived products.

- Major Investment in New Plants

  A foreign company may be willing to invest hard currency capital to build a new stand alone plant, e.g., a chemical plant, utilizing feed stocks from the ethylene cracker or aromatics production unit at Buorgas with part of the products being sold to the domestic market and a substantial part of production being sold into the export market by the joint venture partner.

- Major Investment to Buy Into Existing Plants

  This is probably the ultimate objective in which a large international oil company would purchase part of a refining / distribution / marketing operation in Bulgaria and the hard currency capital would be provided for ownership of existing plants and investment in upgraded or new plants. The foreign partner would also bring technical, management and marketing expertise.

Possible structures are:

- Allocate or sell some of the existing petrol stations (gasoline retail outlets) and depots (terminals) of Petrol to Neftochim and to Plevin. Sell 50% of Neftochim and / or Plevin to a foreign partner with a commitment that part of the purchase price would be for new investments to update, replace and expand the fixed assets of each company and part would be hard currency for working capital to buy foreign crude oil and process some of it into export products to yield hard currency to maintain the hard currency working capital. The foreign partner would also receive a contractual commitment from the Bulgarian Government to enable it to repatriate dividends in hard currency. The foreign partner would also provide assistance in training operating, accounting, marketing and management personnel in the joint venture.

- Buorgas could be broken up into a number of companies, e.g., refining; petrochemical; and polymers; each operating at arms length. Joint ventures could be established with foreign partners in petrochemical and polymer plants.

ABBREVIATIONS

°API	deg API (gravity of oil fractions, defined by API)
°C	degree Celsius
°F	degree Fahrenheit
%	per cent
/	per (e.g., tonnes/day)
A	ampere
ACFM	actual cubic feet per minute
AFBC	Atmosperic Fluidized Bed Combustion
API	American Petroleum Institute
ASTM	American Society of Testing Materials
BACT	best available control technology
BFW	boiler feed water
BOD	biological oxygen demand
BPCD	barrels per calendar day
BPSD	barrels per stream day
BS&W	Basic Sediment and Water
BTX	benzene toluene xylene
Btu	British thermal units
C.F.	characterization factor
CCR	contineous catalyst regeneration
COD	chemical oxygen demand
CV	calorific value (heat of combustion)
DCS	distributed control system
DEA	Diethanolamine
EP	end point
EPA	Environmental Protection Agency (U.S.)
FBP	final boiling point
FCC	fluid catalytic cracking
FGD	flue gas desulfurization
FOE	fuel oil equivalent
G	giga(10^9)
GCV	gross calorific value
GJ	giga joules
HC	hydrocarbons
HDS	hydrodesulfurization
HP	high pressure
Hg	mercury
Hz	hertz
IBP	initial boiling point
IGT	Institute of Gas Technology

ISBL	inside battery limit
J	joule
KRW	Kellogg Rust Westinghouse
LHSV	Liquid Hourly Space Velocity
LP	linear programming/low pressure
Lube	Lubricating
M	mega(10^6)
MEA	Monoethanolamine
MEK	methyl ethyl ketone
MHC	mild hydrocracking
MON	motor octane number
MPa	Megapascal, a unit of pressure
MSW	municipal solid waste
MTBE	methyl tertiary butyl ether
MVA	mega volts ampere
MVAR	mega voltampere reactive
MW	mega watts
NAAQS	National Ambient Air Quality Standards
NCV	net calorific value
NO_x	Oxides of Nitrogen
NPDES	National Pollutent Discharge Elimination System
OSBL	outside battery limit
OVA	Organic Vapor Analyzer
PFBC	Pressurized Fluidized Bed Combustion
PONA	Paraffins, Olefins, Naphthanes and Aromatics
Pa	pascal, a unit of pressure
RCC	reduced crude conversion
RON	research octane number
RTD	Resistence Temperature Detector
RVP	Reid Vapor Pressure
S.R.	Straight Run
SCFD	standard cubic feet per day
SCFH	standard cubic feet per hour
SCFM	standard cubic feet per minute
SG	specific gravity
SO_x	Oxides of sulfur
SRC	solvent refined coal
T	tera (10^{12})
TBP	true boiling point
TDS	total dissolved solids
TEFC	totally enclosed fan cooled
TEL	tetraethyl lead
TOC	total organic carbon
TSS	Total Suspended Solids

UOP K	UOP Characterization Factor
V	volt
VOC	volatile organic compound
WWTP	wastewater treatment plant
WATSON K	Watson Characterization Factor
XP	explosion proof
atm	atmosphere or atmospheres
bar	bar
cP	centipoise
cSt	centistokes
cal	calorie
cm	centimeters
cps	cycles per second
day	day
ft^3	cubic feet
ft	feet or foot
g	gram
gal	gallons
gpm	gallons per minute
h	hour
hp	horse power
in	inch or inches
k	kilo
kA	kiloamperes
kPa	kilo pascal, a unit of pressure
kV	kilovolts
kWh	kilowatt hour
kcal	kilo calories
kg	kilogram
kg/cm^2	kilogram per square centimeter
lb	pound or pounds
liter	liter or litre
m	meter or metre
max.	maximum
mg	milligram
mi	mile
million	million(10^6)
min	minute
min.	minimum
mm	millimeters
mol	mole
n	normal
ohm	ohm

pH	pH, a measure of acidity or strength of a base.
percent	percent(or %)
phase	phase (electrical)
ppm	parts per million
ppmv	parts per million (volume)
ppmw	parts per million (weight)
ppb	parts per billion
psi	pounds per square inch
psia	pounds per square inch absolute
psig	pounds per square inch gauge
ptb	pounds per thousand barrels of oil
rpm	revolutions per minute
sec	seconds
tonne	metric ton
tonnes	metric tons
vol	volume
wt	weight
y	year

USAID

TERMS OF REFERENCE

DESCRIPTION/SPECIFICATIONS/WORK STATEMENT

Component #2: A PETROLEUM REFINERY EFFICIENCY IMPROVEMENT ENERGY CONSERVATION PROGRAM

1. BACKGROUND

The petroleum sectors of Bulgaria, Czechoslovakia, Poland, Romania, and Yugoslavia (as well as that of Hungary) are emerging from a 40-year period of centrally-planned crude supplies and centrally-controlled markets. Practically all of the petroleum refineries in these six countries were built, or modernized, during this period.

Among the five countries, it appears that Bulgaria has three separate refineries having an aggregate throughput of 300,000 B/D; Czechoslovakia has seven aggregating 455,000 B/D; Poland nine with an aggregate throughput of 385,000 B/D; Romania thirteen aggregating 617,000 B/D; and Yugoslavia seven with an aggregate capacity of 609,135 B/D. Now, these refineries face changing circumstances.

First, it is likely that the existing refineries were designed to process a narrow slate of crude oils supplied from the USSR. Now, crude supply options have broadened so that supplies can be bought on the world market through spot and contract purchases. The USSR appears to be phasing out as a primary crude supplier to these countries. Accordingly, potential future crude oil slates can have a much broader range of physical and chemical characteristics than has heretofore been the case.

Second, market conditions for the refinery product slates have been based on the principles of a centrally-planned national economy. Expectations, because of the shift to democratic pluralism in these countries, are for a higher standard of living for the populations, for a greater awareness of the need for environmental protection, and for shifts in refinery-product slates that will occur because of these. The capabilities of the mix of processing units in the refineries in each country to adjust simultaneously to changing crude slates and product slates will be brought into question.

Third, greater public awareness of preserving environmental quality and of the environmental deterioration that has occurred during the past forty years are likely to force major changes in refinery design and operating practices to reduce noxious gaseous, liquid, and solid waste emissions. This awareness is likely to emphasize production of unleaded gasolines and alcohol additives, and perhaps also the exploration of neat alcohol and compressed natural gas alternatives. At the same time, changes in refinery operations will be demanded to reduce noxious emissions to the extent practical.

Finally, tightened economic conditions will force refinery managements to improve operations through introducing more efficient internal utilization of energy and through implementing opportunities for energy conservation. These improvements will have to occur while anticipating changing crude and product conditions and with an inventory of processing units in the refineries that in all likelihood has a limited flexibility to adapt to changes. The roles for alternative fuels could emerge here also.

Compounding the problem of managing change are shortages of foreign exchange, increases in foreign exchange demands because of purchase of crude oil supplies on the open market at now greatly increased price levels, and demands on investment capital that will be generated by the political and economic changes in these countries. Foreign investment by international oil companies in petroleum-sector investment opportunities could bring needed foreign exchange and could potentially lead to new refinery construction at strategic locations and the scrapping of some existing refineries.

The complexity of the relationships within the petroleum sector system is somewhat illustrated in Figure 1 of this Appendix.

Obviously, managing the process of change will take some time. The inputs for analysis are not yet completely available. Economic benefits will depend on national policies, formed or as yet unformed. The current crude supply and pricing picture is an unstable one. Foreign investor interest in the five countries probably varies among the countries and perhaps is not yet well focused on the petroleum sector.

Nevertheless, a start in an analysis to improve the situation can be made provided the focus of initial efforts is on a rationalization of the petroleum-system situation in each of the five countries. Rationalization intends (a) efficient, effective, and environmentally-acceptable improvement in the production of petroleum products to serve current domestic markets, (b) adaptation of current operating practices to serve emerging domestic markets from expected, cost-attractive, crude-oil slates, and (c) identification of the improvements in terms of consistency with the privatization policies in each of the five countries.

2. GOAL AND OBJECTIVES

Accordingly, the generic goal of the work is to begin a process that ultimately can lead to such rationalization of the petroleum sectors in each of the five countries. The end results for the work at this time are

a. an organized data base comprising available data and information relevant to producing inputs for later use by others (when sufficient data and information for the

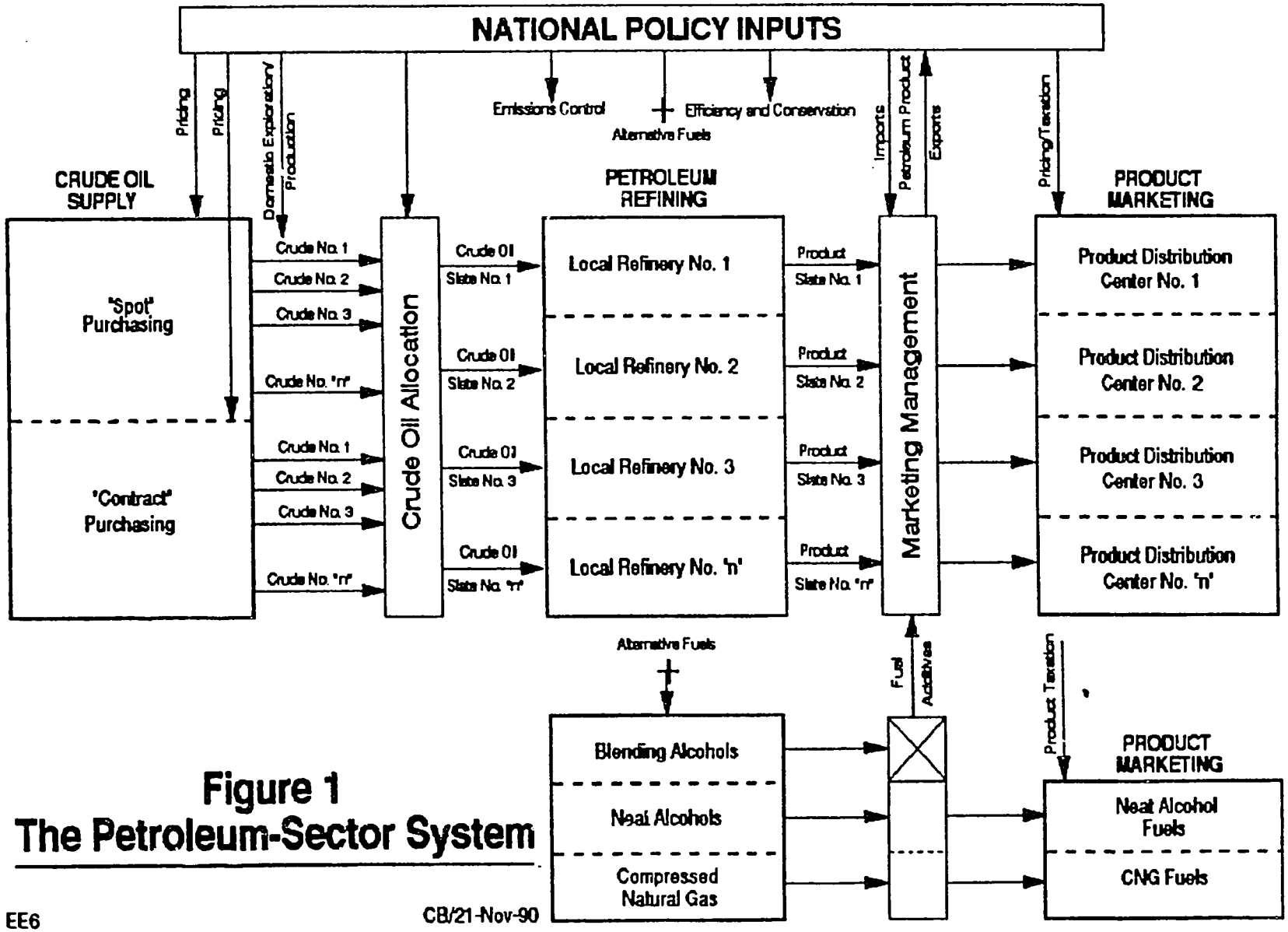

Figure 1
The Petroleum-Sector System

EE6 CB/21-Nov-90

various components of the petroleum system, such as is shown in Figure 1, become available) in a commercial linear programming model to optimize the petroleum system in each country,

b. low-cost improvements in the energy efficiency and environmental impact of selected refineries producing the current product slates that have been implemented during the course of the Contractor's work, and

c. the identification of further improvements which can only be implemented at a later time by others through making a significant investment that needs to be justified.

Accordingly, the objectives of the work focus on the five countries and are

a. for the refinery sector in each country and to the extent that relevant information is available, to describe the process mix in each refinery, the technical capabilities, and current operating practices in a form that (1) provides a data base for undertaking further and future work by others aimed at optimizing the petroleum system in each country and (2) more specifically for the present, enables at least qualitative judgments to be made of effects of changing crude-oil slates on refinery product slates;

b. for a sample of two refineries each in Czechoslovakia, Poland, and Yugoslavia and one refinery each in Bulgaria and Romania, to identify changes in operating practices and low-cost modifications to equipment that can be immediately implemented to increase the efficiency of energy utilization, to conserve energy by avoiding unjustified use, and to reduce as far as practical undesirable gaseous, liquid, and solid effluents;

c. for the same refinery selection in each country, to identify, characterize, and recommend more-extensive changes in practices and equipment and modifications to the process units, which appear justifiable but at the same time require further study possibly with inputs that may not yet be available; and

d. to assist the management of each refinery selected in each country, as needed, in the implementation of the changes identified in b. above through on-the-spot assistance (including training sessions for refinery personnel).

3. APPROACH

This work statement is intended to be generic and applicable in each of the five countries. The intent is to undertake the work with two separate teams of specialized personnel operating in parallel. One team will undertake the work in three countries sequentially and the other in the two remaining countries sequentially. The two teams will be supported as appropriate by a home-office team. The work of the three teams will be coordinated by a program director.

In order to permit pragmatic planning for efficient accomplishment of the work, the first activity will be a reconnaisance in the five countries, probably lasting five weeks, during which needed technical and administrative inputs will be developed and needed local support arranged for. In order to gauge the effectiveness of the work, the final activity will be return visits to the five countries, probably over a two week period when the final reports have been submitted, for the purpose of discussing the results and answering questions that may arise.

The expectations are that considerable data and information will be collected for the countries and for the operating oil refineries. Also, expectations are that this data base, aside from the needs of the Contractor's work program and even after the completion of his work, can provide continuing inputs to other efforts aimed at improving operations in the non-refinery components of the petroleum-sector system (see Figure 1) or to follow-on efforts aimed at implementing the longer-term improvement opportunities identified in the work. Therefore, data and information collection is to be computer oriented with programs organized to be user-friendly and documented accordingly in the Contractor's final reports.

Furthermore, in the identification of improvement opportunities relevant to achieving the objectives of the work, expectations are that benefit/cost estimates will be prepared and/or evaluations performed as far as practical. Estimates and calculations will, with little doubt, require assumptions to fill in for a lack of data. Therefore, estimate preparation and evaluation of opportunities is also to be computer-oriented and user-friendly with programs designed to permit asking "what if" questions, with documentation incorporated in the Contractor's final reports.

Petroleum refineries and petrochemical manufacturing plants are closely linked both physically and through refinery products that become petrochemical feedstocks. The work shall be confined to petroleum refineries only. For this purpose the refinery shall be defined as comprising all

installations that pertain to the receipt of the crude oil through to processing and storage of the refinery's primary products. A primary product shall be defined as one that has been fully processed so as to be marketable. On-site facilities to blend different gasoline streams, produce, and process them to final specifications are refinery units. Refinery gas and/or liquid streams that are delivered to other units for further processing, such as to ethylene, ammonia, or aromatic extraction, are to be considered as finished products.

Equipment purchases (both for test work and for permanent installation) needed for the implementation of short-term improvements shall be defined and justified. A brief report shall be submitted for A.I.D. approval before committing to purchase.

4. TASKS

The following tasks are foreseen for the work.

a. Refinery Characterization

The work is technically oriented. It involves preparing for each refinery in each country, a block flow diagram showing the processing units and the support facilities between receipt of the crude oil slate and the dispatch of the product slate to market. The depth of detail for this characterization will provide

1) a description as far as practical of the capability of each processing unit in terms of feedstocks and feedstock variability and product yields and specifications; of the operating conditions, age, mechanical condition of the processing units; of the consumption of utilities (electricity, water, catalysts, chemicals, etc.); and of the quantities and characteristics of the effluents.

2) a description as far as practical of the support facilities in terms of crude and product storage capacity, fire protection and personnel safety provisions, and methods for segregation, collection, treatment, and disposal of solid, liquid, and gaseous effluents.

3) a written operating history of a refinery for the previous 12-month period emphasizing crude-oil receipts and specifications, product slates produced, unusual operating experiences, routine maintenance performed, and emergencies encountered during operations.

4) a description of the method of electricity supply, whether entirely purchased, self-generated, or a combination of both; and a technical description of the design and operation of the power house (if any) in terms of energy balance and heat rate.

b. Refinery Financial Structure

The objective in this task will be to collect data on local practices from the refinery management and/or from other appropriate sources that can be evaluated to establish the basis whereby the cost of each improvement opportunity can be pragmatically estimated and attractiveness of the opportunity determined. The expectation is that attractiveness will be based in part on (a) the magnitude of the capital requirement, including the foreign exchange component, and (b) the period of time within which the cost of the improvement can be recovered through savings in operating costs achieved. Attractiveness shall refer also to quantification (if practical) of benefits from reduced emissions of objectionable effluents. No need exists to relate emissions for compliance with any existing standards.

c. Selection of the Refineries

The refineries to be subjected to more detailed study, in order to meet Objectives b, c, and d above, shall be selected during the reconnaisance period by mutual agreement between the Contractor and the host-government agency concerned. For Contractor's guidance, the main criterion for selection should be based on achieving a maximum efficiency/environmental improvement impact for a minimum effort and cost in a minimum time frame. However, the selection shall be subject to A.I.D. concurrence.

d. Refinery Housekeeping

For each country and for each selected refinery, the work involves observation over a period of time of the refinery operations in order to detect opportunities to improve operating and maintenance practices, such as by

1) eliminating the presence of leaky valve-stems and steam traps,

2) incrementally insulating excessively hot surfaces,

3) avoiding poor combustion conditions (high oxygen content in chimney gases because of excessive excess air beyond combustion needs and/or leaky furnace settings),

4) avoiding excessive carbon monoxide in chimney gases (poor combustion, inadequate mixing of fuel and air),

5) increasing the frequency with which heat transfer surfaces are cleaned of fouling deposits,

6) reviewing whether rotating machinery is adequately maintained in terms of lubrication and condition of bearings, and

7) reviewing whether plant instrumentation is adequate and/or well-enough maintained to provide accurate readings of operating conditions and is appropriately configured to permit efficient operation.

e. Heat Conservation

The work involves observations over a period of time to evaluate the adequacy of provisions to recover heat that otherwise is wasted. The best example is a lack of airheaters to recover heat from hot chimney gases in refinery furnace equipment. Another example is the design of feedstock preheat heat exchanger trains and the opportunity to introduce an additional heat exchanger that can be justified now because of higher energy prices.

f. Process Unit Operating Conditions

The work involves analyzing the operating conditions and control systems installed for each processing unit in a selected refinery in order to determine whether these are appropriate for the products from the feedstock. This analysis can be particularly significant if current feedstocks and/or product slates have changed from the conditions on which the original design of the processing unit was based.

g. Refinery Energy Balance

The work involves analysis of the flows of energy among the different processing units comprising each selected refinery as well as within the processing units themselves in order to identify opportunities for energy-efficiency improvement in the short term and long term.

The analysis should attempt to provide a data base to assist others to foresee the longer term opportunities for a more efficient energy balance through review of the market demand, future crude oil supplies, and the design and applicability of the processing units themselves. Ultimately, the product of such analysis by others could be decisions to abandon certain units, modify others, or add new units, all providing for greater thermal efficiency.

Accordingly, the Contractor shall attempt to foresee as far as practical the prospect that such future analysis could invalidate the benefits perceived for an identified long-term opportunity from a presumption that a substantial remaining useful life for the process unit exists.

h. Fuel Switching

For each selected refinery, the work shall include comment and expert opinion on the practicality of replacing petroleum hydrocarbon fuels with indigenous coal. Refinery furnaces have in the past been fired with coal. Fuel switching to coal to save on oil imports could be a viable option. However, the Contractor shall focus on a different technical option for coal utilization, in order to reduce investment, by considering high fuel-density, coal/water slurry fuels as a direct replacement for fuel oil with minimum retrofit. Sootblowers could handle the higher ash content.

Consideration of such an option should be limited to assessing its practicality in terms of coal supply and characteristics, the state-of-the-art of fuel formulation, and adaptability to existing combustion equipment.

i. Refinery Emissions

For each selected refinery, the work involves preparing a survey of all solid, liquid, and gaseous refinery effluents in terms of sourcing, probable quantities, and chemical analyses, and suggesting practices to be employed in the refinery for control to reduce such emissions that reflect experiences elsewhere where emission control laws are in effect. There is no need to relate this task to showing compliance of emissions with standards that may be established by the World Bank or the U.S. Environmental Protection Agency.

j. Data Evaluation

The work involves computer-oriented organization of the data and information collected, evaluation of the data and information, compiling cost estimates, performing financial calculations, ranking opportunities in terms of the adopted criteria, and preparing final reports to meet the objectives of the work.