PN-ABN-598

EVALUATION AUDIT REPORT ROMANIAN PETROLEUM REFINERY PETROBRAZI, PLOIESTI

A SELECTIVE REFINERY ANALYSIS FOR: OPERATION, ENERGY USE, ENVIRONMENTAL IMPACTS AND IMPROVEMENT OPPORTUNITIES

MAY, 1992

PREPARED BY: DAVY MCKEE CORPORATION, CHICAGO, IL USA

U.S. EMERGENCY ENERGY PROGRAM FOR EASTERN AND CENTRAL EUROPE

U.S. AGENCY FOR INTERNATIONAL DEVELOPMENT
BUREAU FOR EUROPE
WASHINGTON, D.C. 20523

EVALUATION AUDIT REPORT
ROMANIAN PETROLEUM REFINERY
PETROBRAZI

A SELECTIVE REFINERY ANALYSIS FOR:
OPERATION, ENERGY USE, ENVIRONMENTAL IMPACTS
AND IMPROVEMENT OPPORTUNITIES
MAY, 1992

PREPARED BY: DAVY MCKEE CORPORATION, CHICAGO, IL USA
300 SOUTH RIVERSIDE PLAZA
SUITE 1800
CHICAGO, IL 60606
(312) 669-7000

PROJECT MANAGER: ARKADIUSZ WALINSKI
LEAD / PROCESS: WILBUR A. HOLVE
ELECTRICAL: TADEUSZ P. RASLAWSKI

U.S. EMERGENCY ENERGY PROGRAM FOR EASTERN AND CENTRAL EUROPE

U.S. AGENCY FOR INTERNATIONAL DEVELOPMENT
BUREAU FOR EUROPE
OFFICE OF DEVELOPMENT RESOURCES
ENERGY AND INFRASTRUCTURE DIVISION
WASHINGTON, D.C. 20523

USAID CONTRACT EUR-0015-C-00-1011-00

Davy

REFINERY EVALUATION AND AUDIT
PETROBRAZI REFINERY WORKS, PLOIESTI, ROMANIA
TABLE OF CONTENTS

EXECUTIVE SUMMARY

A. INTRODUCTION

1. OBJECTIVES
2. REFINERY SELECTION
3. SUMMARY OF FIELD ACTIVITIES
4. REFINERY DESCRIPTION
5. TYPES OF ENERGY IMPROVEMENT OPPORTUNITIES
6. TYPES OF ENVIRONMENTAL EMISSIONS IMPROVEMENTS

B. REFINERY ENERGY BALANCE

1. OPERATING UNIT ENERGY USE

2. FUEL SYSTEMS

2.1. Fuel Sources
2 1.1 Current Status
2.1.2 Future Supply

2.2 Fuel Distribution
2.3 Fuel Users

3. STEAM SYSTEM
3.1 Steam Generation
3.2 Steam Levels
3.3 Steam Users

4. ELECTRIC POWER SYSTEM
4.1 Electricity Sources
4.2 Electric Distribution System
4.3 Electric Power Users

5. COOLING WATER SYSTEM
5.1 Water Source
5.2 Typical Cooling Towers
5.3 Water Treating

6. AIR COOLERS

7. ENERGY RECOVERY SYSTEMS
7.1 Process Heaters
7.2 Fluidized Catalytic Cracking Unit

C. REFINERY FLEXIBILITY

1. OVERVIEW
1.1 General
1.2 Crude Composition
1.3 Crude Charge Rate
1.4 Product Splits/Volumes
1.5 Product Specifications

2. ATMOSPHERIC DISTILLATION UNIT NO. 100
2.1 Process Flow Diagram
2.2 Feedstock
2.3 Flexibility
2.4 Operational Sensitivity
2.5 Product Specifications
2.6 Unit Yields (as Reported for Imported Crude)
2.7 Unit Modification Potential
2.8 Capacity Increase Potential
2.9 Operating Practices

3. PLATFORMER UNIT NO. 130
3.1 Process Flow Diagram
3.2 Feedstock
3.3 Flexibility
3.4 Operational Sensitivity
3.5 Product Specifications
3.6 Unit Yields
3.7 Unit Modification Potential
3.8 Capacity Increase Potential
3.9 Operating Practices

4. FLUID CATALYTIC CRACKING UNIT I
4.1 Process Flow Diagram
4.2 Feedstock
4.3 Flexibility
4.4 Operational Sensitivity
4.5 Product Specifications
4.6 Unit Yields
4.7 Unit Modification Potential
4.8 Capacity Increase Potential
4.9 Operating Practices

5. PLANT LIMITATIONS
5.1 Unit Capacities
5.2 Product Requirements
5.3 Fuel System
5.4 Steam System
5.5 Electric Power System
5.6 Tankage
5.7 Other Limitations

D. **HEAT CONSERVATION**

1. HEAT TRANSFER PRACTICES

2. UNIT HEAT BALANCES
2.1 Crude Unit
2.2 Platformer
2.3 Fluid Catalytic Cracker

3. HEAT TRANSFER EQUIPMENT ANALYSIS
3.1 Fired Heaters
3.2 Heat Exchanger Trains
3.3 Waste Heat Recovery
3.4 Economics of Increasing Surface Areas

4. STEAM SYSTEM
4.1 Steam Balance and Utilization
4.2 Selection of Pressure Levels
4.3 Condensate System
4.4 Insulation
4.5 Potential Effect of Energy Savings Projects to Steam Balance

5. HEAT REJECTION SYSTEMS
5.1 Cooling Water Systems
5.2 Air Coolers
5.3 Equipment, Piping, and Steam Heat Losses
5.4 Recovery Systems
5.5 Tracing and Temperature Maintenance Systems

6. USE OF HOT OIL LOOPS

E. **MECHANICAL DRIVE SYSTEMS**

1. COMPRESSORS DRIVES
1.1 Delayed Coking Unit
1.2 Plant Air System
1.3 Fluid catalytic Cracking Unit
1.4 Catalytic Reformer Unit

2. SPECIAL PUMPS

3. ELECTRIC MOTORS

4. STEAM TURBINES

5. SPECIAL EQUIPMENT

F. **MAINTENANCE/MECHANICAL OBSERVATIONS**

1. OVERALL IMPRESSIONS

2. UNIT REVIEW

3. EQUIPMENT CONDITION SUMMARY
3.1 Fired Heaters and Boilers
3.2 Heat Exchangers
3.3 Vessels
3.4 Rotary Equipment
3.5 Steam System
3.6 Piping and Valves

3.7 Instrumentation
3.8 Electrical Equipment
3.9 Corrosion
3.10 Insulation

4. MAINTENANCE POLICY, PRACTICES, AND HISTORY

G. ENERGY LOSS MONITORING SYSTEMS

H. FUEL SWITCHING/UTILIZATION

1. REFINERY FUEL SYSTEM

2. GENERAL REVIEW OF POTENTIAL REFINERY USE FOR COAL
2.1 Direct Coal Firing
2.2 Coal Gasification
2.3 Other Technologies

3. COAL AT THE PETROBRAZI REFINERY
3.1 Availability and Characteristics of Coal
3.2 Potential for Use
3.3 Economics of Use

I. REFINERY EMISSIONS

1. SUMMARY OF ENVIRONMENTAL SURVEY
1.1 Refinery Sulfur Balance
1.2 Air Emissions
1.3 Water Quality
1.4 Solid Waste Disposal
1.5 Impact of Maintenance
1.6 Evaporation Losses
1.7 Loss of Products to Solvents

2. HANDLING OF MATERIALS
2.1 Heavy Metals
2.2 Sulfur
2.3 Sulfuric and Hydrofluoric Acids
2.4 Combustion Products
2.5 Tars

3. MEASUREMENT OF EMISSIONS

4. SPECIFIC RECOMMENDATIONS

J. ENERGY EFFICIENCY IMPROVEMENTS

1. IMMEDIATE OPPORTUNITIES
2. MEDIUM TERM OPPORTUNITIES
3. LONG TERM OPPORTUNITIES

K. ENVIRONMENTAL EMISSIONS REDUCTIONS

1. IMMEDIATE OPPORTUNITIES
2. MEDIUM AND LONG TERM OPPORTUNITIES
3. FURTHER WORK REQUIRED

APPENDICES

APPENDIX A CHARACTERIZATION REPORT REFERENCE/ABSTRACT
APPENDIX B TERMS OF REFERENCE
APPENDIX C ABBREVIATIONS
APPENDIX D ECONOMIC ANALYSIS
APPENDIX E REFINERY ENERGY BALANCE AND "ENERGY DEMAND" CRITERIA
APPENDIX F INSTRUMENTATION
APPENDIX G ELECTRICAL ENERGY CONSUMPTION IN 1990 AND ELECTRIC ENERGY PRICES

LIST OF TABLES

Table No.	Title	Page No.
B.1.1.	ENERGY EFFICIENCY COMPARISON - PETROBRAZI REFINERY OPERATIONS 1990 - COMPARED WITH TYPICAL US OPERATIONS	B-4
B.2.1.1	TYPICAL FUEL CHARACTERISTICS	B-6
B.2.1.2	REFINERY FUEL GAS SOURCE	B-7
B.2.3	FUEL CONSUMPTION DESIGN BASIS	B-9
B.5.2.2	HYPERBOLIC COOLING TOWER DESIGN BASIS	B-13
B.5.3.1	RAW WATER TREATMENT SUMMARY	B-14
C.2.5	CRUDE/VACUUM UNIT - SELECTED PRODUCT CHARACTERISTICS	C-5
C.2.6	ATMOSPHERIC/VACUUM DISTILLATION UNIT 100 - DESIGN BASIS PRODUCT YIELDS	C-7
C.3.2.1	PLATFORMER UNIT 130 - DESIGN BASIS AND FEEDSTOCK CHARACTERISTICS	C-12
C.3.6	PLATFORMER UNIT 130 UNIT YIELDS	C-14
C.4.2.1	FCC UNIT NO.1 DESIGN BASIS TYPICAL FEEDSTOCK THROUGHPUTS	C-17
C.4.2.2	FCC UNIT NO.1 - DESIGN BASIS - TYPICAL FEEDSTOCK PROPERTIES	C-18
C.4.5	SELECTED PRODUCT SPECIFICATIONS - FCC UNIT (TYPICAL) - 75% CONVERSION	C-20
C.4.6	TYPICAL FCC UNIT YIELDS	C-21
D.1	UNIT ENERGY USE COMPARISONS	D-1
D.4.1.1	NEW REFINERY WASTE HEAT RECOVERY STEAM GENERATION	D-5
D.4.1.2	WASTE HEAT RECOVERY STEAM GENERATION	D-5
D.4.2	STEAM PRESSURE/TEMPERATURE SPECIFICATIONS	D-6
F.3.1.1	ATMOSPHERE DISTILLATION TOWER HEATER OPERATING CONDITIONS	F-4
F.3.2.1	FCC #2 GASOLINE CONDENSER - TYPICAL OPERATIONS	F-5
F.3.4.1	CRUDE UNIT #1 TYPICAL PUMP OPERATION	F-7
F.3.4.2	REFINERY UTILITY AIR COMPRESSOR TYPICAL OPERATION	F-8
F.3.4.3	PETROBRAZI REFINERY REFORMER UNIT - TYPICAL OPERATIONS	F-9

H.1.3.1	WASTE WATER TREATMENT - STANDARDS VS. ACTUAL	I-2
H.1.4.1	SOLID WASTE DISPOSAL QUANTITIES	I-3
AP-E.1	TYPICAL REFINERY UTILITY USAGE	AP-E-3
AP-E.2	TYPICAL REFINERY UTILITY USAGE	AP-E-4
AP-E.3	TYPICAL REFINERY UTILITY USAGE	AP-E-5
AP-E.4	TYPICAL REFINERY UTILITY USAGE	AP-E-6
AP-E.5	TYPICAL REFINERY UTILITY USAGE	AP-E-7
AP-E.6	TYPICAL REFINERY UTILITY USAGE	AP-E-8
AP-E.7	TYPICAL REFINERY UTILITY USAGE	AP-E-9
AP-E.8	TYPICAL REFINERY UTILITY USAGE	AP-E-10
AP-E.9	TYPICAL REFINERY UTILITY USAGE	AP-E-11
AP-E.10	TYPICAL REFINERY UTILITY USAGE	AP-E-12
AP-E.11	TYPICAL REFINERY UTILITY USAGE	AP-E-13
AP-E.12	TYPICAL REFINERY UTILITY USAGE	AP-E-14
AP-E.13	TYPICAL REFINERY UTILITY USAGE	AP-E-15
AP-E.14	TYPICAL REFINERY UTILITY USAGE	AP-E-16
AP-E.15	TYPICAL REFINERY UTILITY USAGE	AP-E-17
AP-G.1A	PROCESS ELECTRICAL ENERGY CONSUMPTION 1990	AP-G-2
AP-G.1B	PROCESS ELECTRICAL ENERGY CONSUMPTION 1990	AP-G-3
AP-G.1C	PROCESS ELECTRICAL ENERGY CONSUMPTION 1990	AP-G-4

LIST OF FIGURES

Figure No.	Title	Page No.
Figure 1	Overall Refinery Block Flow Diagram	A-5
Figure 2	Simplified Process Flow Diagram - Atmospheric/Vacuum Distillation Unit No. 100	C-6
Figure 3	Simplified Process Flow Diagram - Catalytic Reforming Unit No. 130	C-11
Figure 4	Simplified Process Flow Diagram - Fluid Catalytic Cracking Unit No.1	C-16

EXECUTIVE SUMMARY

In 1991, the United States Agency for International Development (USAID), as an element of its Emergency Energy Program for Central and Eastern Europe, retained the Chicago office of the Davy McKee Corporation (DMC) to perform a technical study of ten of the eleven refineries that constitute the Petroleum Refining Industry of Romania. The results of the study are presented on two levels: Refinery Characterization and Selected Refinery Evaluation. This report covers the results of an audit and evaluation of the Petrobrazi Refinery in Romania. The Petrotel Refinery, also located outside of the town of Ploiesti, was also selected for audit and evaluation. A separate report covers the characterization of the Romanian petroleum refining industry. Also, a separate report covers the structure and use of a computerized data base, which has been prepared from the data in response to a DMC questionnaire issued before the beginning of the field work.

The project started with meetings in early December 1990, between the United States and Romanian energy officials. During the meetings, a plan and schedule were developed for participation by Romania in the U.S. Emergency Energy Program. This evaluation report contains the elements agreed upon at these initial meetings. The goals of the program were to provide a data base for future planning activities in Eastern Europe to improve the viability of the petroleum sector, support the achievement of improved energy consumption efficiency and support alleviation of adverse environmental impact. The study then addressed the potential for achieving substantial improvement in operations and energy efficiency and the disposal of solid, liquid and gaseous effluent both by reduction in volume and method of handling. Order-of-magnitude capital requirements and simple payback time associated with identified opportunities form part of these evaluation reports. The Scope of Work, or Terms of Reference for this projec may be found in Appendix B of this report.

At the outset of the project, teams were organized for both the characterization and evaluation efforts and consisted of engineering professionals with many years of experience in their respective disciplines in the design and technical operation of a petroleum refinery. Technical disciplines represented within the team were chemical, process, environmental, mechanical, electrical, and instrumentation engineering.

It should be noted that Rafirom required that DMC sign a Secrecy Agreement prior to release of information. Further, a similar agreement was executed with UOP of Des Plaines, IL. Each organization required review and approval of a draft report. Such review and approval has occurred.

The steps for acquisition of data for preparation of this evaluation report were divided into three stages.

First, there was a preliminary, or reconnaissance visit to Romania during which a rather detailed questionnaire was furnished to the Petrobrazzi refinery representative.

The second step was assembly in Chicago of the DMC team together with host country consultants for a week of orientation.

The third stage of the evaluation and audit effort consisted of data collection at the refinery. This was done through meetings with operating managers and engineers of selected process units within the refinery. Visits to various process units by members of the team were also made.

During this visit, host country consultants were engaged to participate and provide technical assistance for the in-country phases of the work. In addition to such technical assistance, the consultants were able to provide custom and language interpretation to insure mutual understanding of the material presented.

The Petrobrazi refinery is one of the three major refineries surrounding the town of Ploiesti some 40 miles north of Bucharest, Romania. The Petrobrazi facilities include refining and aromatic and olefinic petrochemical activities. The facilities are situated about 12 kilometers southwest of Ploiesti, directly adjacent to a national grid power station (natural gas fired) from which it receives both power and steam.

The original refinery operations, rated at four million tonnes per year of crude oil throughput, were based on processing Romania sweet crude oils and were designed and built during the early to mid 1960s. The refinery unit operations are strongly oriented toward the preparation of petrochemical feedstocks such as aromatics extraction and isomerization and olefin separation. Most of the plant design, except for the UOP licensed platforming and FCC units, was developed by the Romanians who have a long history and experience in the exploitation of petroleum products. There is, however, a considerable Russian influence in the equipment. In 1977, design and construction began for a second nearly duplicate refinery for processing 3.5 million tonnes per year of imported sour crudes. The atmospheric and vacuum distillation unit was commissioned during 1987 at a time when Romanian oil field production was declining.

The plant is primarily electric motor driven. Cooling of process streams within the refinery is accomplished by first heat exchange against cooler fluids followed by the use of air coolers and final trimming by cooling water. Circulating water is cooled in natural draft hyperbolic towers.

Electrical power and most of the refinery's steam is supplied from the adjacent National Power Station. This power station also supplies low level heat for use as district heating to the town of Ploiesti.

The DMC evaluation of the Petrobrazi refinery took place during the week of 15 to 20 July 1991.

The DMC team received total cooperation from individual refinery staff members. The refinery staff immediately answered inquiries, when possible, or obtained answers from others when necessary. These discussions were often helpful to other team disciplines as well, at least for the orientation period in the refinery, but were less so later due to time limitations and availability of other key staff members in the mechanical, electrical, and instrumentation departments.

A detailed process flow diagram of the units under review was examined and all the major operating parameters affecting energy efficiency were discussed with the appropriate process unit manager. Translators were used where necessary during the discussions.

When the flow sheet review and technical discussions were completed, the refinery was inspected. Regarding process matters, no proper measurements were taken but the DMC team, through certain instrument readings, such as oxygen analyzers or temperature and pressures, were checked where possible. The team relied on the integrity and accuracy of the refinery's mass balance and utilities consumptions information to reach process conclusions.

The environmental audit was performed during 6 and 7 August 1991 by DMC's environmental engineer, who first reviewed the facility model to obtain an overview of the total plant. Meetings were then held with the Director of Environmental Service and the supervisors of the water treatment, waste water treatment, and solid waste operations. During the discussions, the history of the development of the programs for the control of environmental releases was explained. Most of the audit results are based on the visual observations and experience of the auditor.

Romania began to import crude oil in 1970, primarily from Middle East countries (Iran, Iraq, Syria, Egypt, Saudi Arabia, Kuwait) Libya, in addition to the USSR. Until social and political changes occurred in Iran, this country was considered the main imported crude source. The design basis for new refineries built in the 70s was a 50-50% mixture of Iranian light and heavy crudes. As Iraq has important debts to Romania, Iraqi crude was also an important potential crude source and the subsequent Gulf crisis had a very strong effect on Romania's hard currency balance due to inability of Iraq to pay its debts in crude. During the late 80s, crude imports from the USSR became more important than previously, but it never had the same importance as in other Central and East European countries. After Comecon ceased to exist and the barter base for import was abandoned, Soviet crude lost any special position in Romania's important structure. There was not a

coordinated policy of crude import and long term contracts intended to ensure a steady supply failed. Practically, crude was purchased on a spot base, resulting in low processing efficiency, as refineries were forced to switch crude very frequently or to shut down units for lack of feedstock. Thus, the need for crude oil blending and larger crude oil storage facilities.

Domestic crude production reached its maximum in 1970 when 13.6 million tonnes were extracted and processed. Since then, extraction decreased to 9.2 million tonnes in 1989 and 7.8 million tonnes in 1990. Although forecasting is risky, especially if based on the 1984-1987 experience, an estimated production of 6.5 to 7 million tonnes per year could be expected by 1995. Romanian crudes are divided mainly into three categories, Non-paraffinic, Intermediate and Paraffinic; all domestic crudes are low sulphur (less than 0.6 wt% sulfur).

Of primary concern to the Romanian petroleum processing industry at the present time is to find the financial means to import crude. In the coming 2-3 years, assuming the economy will gradually reach the 1989 level, Romania will need about 10-12 million tonnes/yr of imported crude to cover its internal consumption needs for petroleum products and to satisfy 50-60% of the demands for petrochemical feedstocks. As a natural decline of domestic crude production occurs, imported crude amounts needed for internal consumption will rise. One of the possible avenues for hard currency revenues could be toll processing of crude oil for interested companies.

During 1990, the total crude oil processed in Romania was approximately 20.6 million tonnes, as contrasted to a design rate of 32.65 million tonnes per year.

The rather high percentage of feedstocks for petrochemicals in the product slate is peculiar to Romania refineries, especially for the newer ones such as Petrobrazzi. Fuel oils are also an important component of the product slate in supplying energy and heat production demands of the country. Supports for these demands is the principle reason the total installed throughput exceeds the demand of internal consumption. The planning envisioned that the surplus be exported and consequently process units and their products were designed to meet international specifications. Changes in the international market refined product requirements occurred in the last year; primarily related to limitations on gasoline aromatic content, low or lead free gasolines, and lower sulphur in diesel fuels.

Substantial changes in product slate are not foreseen or expected to be changed in the near future, as gasoline, jet fuels, and diesel fuels will remain the principal products for export. Improvements in quality are needed for these products, such as raising the octane number of unleaded gasoline (through the use of MTBE, alkylate, isomerizate) and decreasing sulphur content of diesel fuels (which means deeper desulphurization and higher hydrogen production.)

Crude is transported to the refinery by pipeline from the Constania Harbor terminal and by pipeline from domestic oil fields. Products are shipped by pipeline, railway and over-the-road tank truck. In 1989, about 55% of total crude and product shipment was by pipeline.

Tetra-ethyl lead is still used as an octane booster in most of the gasoline produced in Romania as the majority of the cars in the country are manufactured to operate on leaded gasoline. A small amount of unleaded gasoline is currently produced for imported cars and tourists. As the Romanian gasoline market approaches the standards and practices of Western Europe, improvements in the refinery octane pool and the substitution of MTBE for lead can be anticipated.

The diesel fuel produced currently contains a maximum of 0.15 wt% sulphur. Eventually, the accepted worldwide sulphur content of diesel fuel is expected to be below 0.05 wt%. In addition, the aromatic content of both gasoline and diesel fuel products will have to be reduced to meet expected regulations and specification.

Should a demand decrease for the refinery fuel products occur, it appears unlikely that the facilities could continue to supply the same tonnage of petrochemical feedstocks.

Environmental pollution must be reduced by improved treatment, disposal of pollutants of all kinds and by reducing losses, especially hydrocarbon vapor losses from storage tanks. Volatile products such as naphtha, gasoline and aromatic hydrocarbons are typically stored in fixed cone roof tanks. The empty, fill, empty cycle - plus thermal expansion produces a discharge of vapors into the atmosphere, causing product loss and air pollution.

As concern for the environment grows and wastewater regulations become more severe, additional treatment will be required for effluent water discharged from the refineries. In a similar way, equipment will be required for reduction of oxides of sulfur and nitrogen discharged to the atmosphere. Initially, existing sulfur plants need to be put back into service. The sulfur plant in the refinery is a two-stage Claus type capable of achieving about 95% sulfur recovery. A third stage or tail gas treatment unit will be required to achieve about 99% sulfur recovery and thus reduce sulfur discharged to atmosphere from this source to an acceptable level.

In the environmental area, middle- and lower-level management, as well as staff personnel at the refineries, are well aware of the opportunities for emissions treatment and operational improvement. However, these opportunities appear to have had a low priority for top management and possibly for the pre-existing Federal structure at the Ministry level.

The middle management of the Romanian refineries is well aware of the need for benefits and general features/aspects of energy saving programs. Several of these are in place and operating. However, the implementation of these programs was obstructed by the shortage of financial means and a different order of priorities resulting from goals set by

top management. For example, it is recognized by the refinery that process furnace efficiency can be significantly improved and be economically viable by installing an air preheater and more effectively controlling excess air to the burners, yet the project has not been implemented.

A different type of potential for energy saving, which also has a very definite environmental benefit, may be found in a program to install a secondary sealing system for floating roof type storage tanks. Here are the energy loss represented by product loss in venting to atmosphere can be equated to the energy consumed in its production. Conservation of weathered crude components can contribute to refinery output at relatively low specific energy input.

Section J. of this evaluation report recommends refinery additions or modifications that have the potential to achieve significant energy improvements. The presentation includes, in most cases, the capital costs and expected savings justifying the expenditures. Other recommendations, investigative in nature, might lead to a substantial return on investment.

A summary of these suggestions is as follows:

- Heat Utilization Efficiency Improvements - Improve the insulation of piping valves and equipment; keep fuel gas analysis under close study to ensure efficient combustion; and test reduction of stripping steam in the vacuum and the crude towers. Study the waste heater boiler tube corrosion to improve the heat recovery unit's on-stream time; monitor heat exchanger energy fouling trends; and perform an energy audit on the FCC unit. Pinpoint possibilities for gaining additional preheat in the crude exchang. train. Study opportunities for additional heat recovery by introducing a top pump around reflux or a preflash tower arrangement for the crude units. Initiate an effective combustion air control program on all process heaters.

- Operational Changes - Improve on-stream time and reduce maintenance costs through use of corrosion resistant material in the Ljungstrom air preheaters. Consider addition of a visbreaker for vacuum residue and a crude pre-flash tower. Test the reduction of stripping steam rates to the crude atmospheric and vacuum tower bottoms together with increased bottom side stream off-take. Consider a short-term test on decreasing desalter water application together with improved demulsifier selection.

- Operating Efficiency Improvements - Study use of variable speed drives and trim impellers on high head pumps. Investigate use of a power recovery turbine in high pressure liquid let-down service of the gas oil hydrotreater. Study the use of a power recovery expander, turbine on FCU regenerator flue gas. Investigate the economics of a FCU CO boiler. Study the addition of vacuum pumps to replace the steam jets on the crude vacuum towers.

- Acquisition of Software - Acquire software for simulation of refining processes, linear programming for economical optimization of refinery operations, and a database management system for inventory and historical maintenance record keeping.

Environmental improvement opportunities are also divided into immediate, medium term and long term categories and are presented in Section K. of this report. These recommended environmental improvements are presented in a manner similar to the energy improvement opportunities presented in Section J.

A summary of the suggested environmental improvements is as follows;

- Investigate the location and extent of soil contamination aimed at removing the source of ground water contamination. Investigate sludge blending to slow reactivation of the existing fluid bed incinerator and investigate the use of the water softening sludge for agricultural purposes.

- Reduce volatile organic chemical emissions to the atmosphere through better management of inter-unit hydrocarbon transfer and tank farm operations. Acquire a portable VOC analyzer for on-site monitoring of emissions. Establish an air monitoring system.

- Implement cooling water hydrocarbon removal activities.

- Investigate the economics of conversion to low nitrogen oxide burners.

- As the refinery moves from natural gas and low sulfur fuel oils to the high sulfur fuels obtained from processing high sulfur crudes, sulfur removal considerations need to be evaluated such as flue gas desulfurization or fuel hydrotreating.

- Improve the refinery maintenance to correct the following environmental problems: excessive oil losses of the process units, tank farms, waste water treatment plant and railroad yard and product loss through excessive flaring.

Some other observations made by the DMC team for the improvement of Petrobrazzi's operations are presented below:

Petrobrazzi was designed to process a variety of crude oils. The age of the equipment in the process units is such that they will have to be evaluated technologically and economically with respect to practices at modern refineries in the West. Adaptation to competitive markets and a changed social structure reinforce the necessity for this evaluation.

The physical condition of the plant equipment, plus an absence of mechanical standards, require a large inventory of spare parts to assure continuous operation. An adequate inventory of spare parts has not always been possible due to financial requirements so that on-stream time suffers even though there is excellent capability within the maintenance staff for repairing equipment and machinery.

The process control strategy and instrumentation can be modernized with the incorporation of advance control concepts and distributed control systems, which in U.S. refineries has had very short payout times due to improved operations.

The potential future economic burden of the present large maintenance and operating staffs could put the refineries at a disadvantage with their Western counterparts. National social programs as they may affect labor practices and thus cost need to be watched closely.

It is to the advantage of each refinery to study and improve safety practices.

Additional crude oil storage capacity should be made available. Suitable instrumentation and equipment is also required for conservation of material during feedstock and product custody transfer and storage.

Acquisition of alternative crude feedstock will require consideration of their effects on processing units and ancillary facilities. Considerations of effects on capacity, ability to satisfy product specifications, corrosion protection, and removal of unwanted components are typical of the issues that must be addressed.

The overall calculated refinery operating loss for 1990 was 2.48 volume per cent. The acceptable Western refinery value is about 0.5 per cent. A reduction of the Petrobrazzi losses to 0.5 per cent at the design operating rate of 3 500 000 tonnes/yr. would result in a savings of 70 000 tonnes/yr., $7 800 000 per year valued as crude oil and $4 500 000 per year valued as fuel oil. There is a need to institute methods and procedures for identifying and effectively controlling these material losses. The reported losses must be reduced to a reasonable level as they represent an order of magnitude of savings similar to what can be accomplished by all the other major efforts of improving energy efficiency throughout the refinery.

It is the opinion of the DMC team, that excellent opportunities exist to reduce the very high present day costs by reducing energy use. Management and operating personnel need to focus on these very fruitful areas. Other than the cost of crude, energy is the overwhelming main refinery cost. In modern U.S. refineries, energy costs are about 70% of the non-crude costs. Also economically, energy savings translate directly in hard currency savings.

It may be expected that environmental regulations will become ever more stringent. Unleaded gasoline, fuel aromatic reduction, low sulfur fuel oils, and control of oxides of sulfur and nitrogen in atmospheric emissions are four examples of issues that will need immediate attention.

A. INTRODUCTION

ACKNOWLEDGEMENTS

The Davy McKee Corporation (DMC) Evaluation Team would like to express its gratitude to the management and staff of the Petrobrazi refinery for their excellent cooperation and assistance. Special thanks are due also to the following individuals and the entire personnel in their department.

Titus Alexandrescu	Technical Director
Stefan Cioc	Coordinator for Petrobrazi

1. OBJECTIVES

The objective of this report is to present opportunities for energy improvement and reduction of emissions for the Petrobrazi refinery which is located 12 kilometers southwest of Ploiesti, Romania. Other defined and specified goals of the study include a consideration of the refinery's operating flexibility; an evaluation of fuel switching including the use of coal as a substitute for energy supply; and an observation of the refinery's general condition and its maintenance practice for its effect on operations. A further objective is to characterize the modifications for achieving expected benefits in accordance with the magnitude of effort and the capital requirements anticipated.

A summary of the stated USAID objectives of this study is as follows:

- To identify changes in operating practices and low-cost modifications to equipment that can be immediately implemented to increase the efficiency of energy utilization, to conserve energy by avoiding unjustified use, and to reduce, as far as practical, undesirable gaseous, liquid, and solid effluents.

- To identify, characterize, and recommend more extensive changes in practices and equipment and modifications to the process units, which appear justifiable but at the same time require further study possibly with inputs not yet be available.

- To assist the management of each refinery selected in each country, as needed, in implementing the changes identified above through on-the-spot assistance (including training sessions for refinery personnel).

This report details the results of the Evaluation and Audit Study. The recommendations of this study to improve energy utilization operations including yields and practices and environmental conditions are categorized as follows:

Immediate minimum cost recommendations

This category covers no cost to low-cost modifications to the refinery that will be relatively inexpensive and easy to implement preferably with the refinery's own staff.

Short term intermediate cost recommendations

This category includes modifications and/or additions to the refinery that will be characterized by costs related to equipment purchases and changes to process operating conditions that could be considered significant. Implementation normally would require outside resources and appropriate justification.

Long term substantial cost recommendations

This category is characterized primarily by significant modifications to current processing capabilities or installation of additional process units to improve the refiner's competitive position into the 21st century. implementation of this type of recommendation would be potentially expensive and time consuming. Implementation requiring outside resources and justification based on changes in crude oil supply and in market conditions.

2. REFINERY SELECTION

Petrobrazi, near Ploiesti, is the largest oil refining and petrochemical plant in Romania. It is, therefore, a logical candidate for this evaluation review. In this report the refinery will be referred to as the Petrobrazi refinery. The petrochemical plant is not covered in this review.

3. SUMMARY OF FIELD ACTIVITIES

The DMC evaluation of the Petrobrazi refinery took place during the week of 15 to 20 July 1991. The evaluation team consisted of: A. Walinski, Project Manager; T. Raslawski, Electrical; A. Steinhaus, Instrumentation; N. Roberts, Mechanical; W. Holve, Refinery Process Engineer; C. Best, Environmental Engineer; and S. Stirimin, translation and technical services consultant.

The evaluation period for Petrobrazi was restricted compared with the originally planned period due to a revised allocation of scheduling time in order to accommodate the additional effort for the audit/evaluation of the Petrotel refinery.

A detailed process flow diagram of the units under review was examined and all the major operating parameters affecting energy efficiency were discussed with the appropriate process unit manager. Translators were used where necessary during the discussions.

The success of individual contacts was strongly influenced by the personalities of the interviewee and the translator, especially with respect to the level of communication. Furthermore, it should be appreciated that different contacts can give somewhat conflicting replies to the same query due to a degree of misinterpretation in dual language communications. However, the DMC team received total cooperation from individual refinery staff members. The refinery staff immediately answered inquiries, when possible, or obtained answers from others when necessary.

These discussions were often helpful to other team disciplines as well, at least for the orientation period, but were less so later due to time limitations and availability of other key staff members in the mechanical, electrical, and instrumentation departments.

When the flow sheet review and technical discussions were completed, the refinery was inspected. Regarding process matters, no proper measurements were taken by the DMC team, though certain instruments' readings, such as oxygen analyzers or temperature and pressures, were checked where possible. The team relied on the integrity and accuracy of the refinery's mass balance and utilities consumptions information to reach process conclusions.

The environmental audit was performed during 6 and 7 August 1991 by C. Best who first reviewed the facility model to obtain an overview of the total plant. Meetings were then held with the Director of Environmental Service and the supervisors of the water treatment, waste water treatment, and solid waste operations. During the discussions, the history of the development of the programs for the control of environmental releases was explained. Most of the audit results are based on the visual observations and experience of the auditor.

4. REFINERY DESCRIPTION

The Petrobrazi refinery is one of the three major refineries surrounding the town of Ploiesti some 40 miles north of Bucharest, Romania. The Petrobrazi facilities include refining and aromatic and olefinic petrochemical activities. The facilities are situated about 12 kilometers southwest of Ploiesti, directly adjacent to a national grid power station (natural gas fired) from which it receives both power and steam.

The original refinery operations, rated at four million tonnes per year, were based on processing Romanian sweet crude oils and were designed and built during the early to mid 1960s. The refinery unit operations are strongly oriented toward the preparation of petrochemical feedstocks such as aromatics extraction and isomerization and olefin separation. Most of the plant design, except for the UOP licensed Platforming and FCC units, was developed by the Romanians who have a long history and experience in the exploitation of petroleum products. A second nearly duplicate refinery for processing 3.5 million tonnes per year of imported sour crudes was under design and construction starting in 1977. The atmospheric and vacuum distillation unit was commissioned during 1987 at a time when Romanian oil field production was declining. A simplified block flow diagram of the refining units is shown in Figure No. 1.

The plant is mainly electric motor driven and air cooled with a considerable degree of trim water exchangers for the warm summer climate. Circulating water is cooled in natural draft hyperbolic towers.

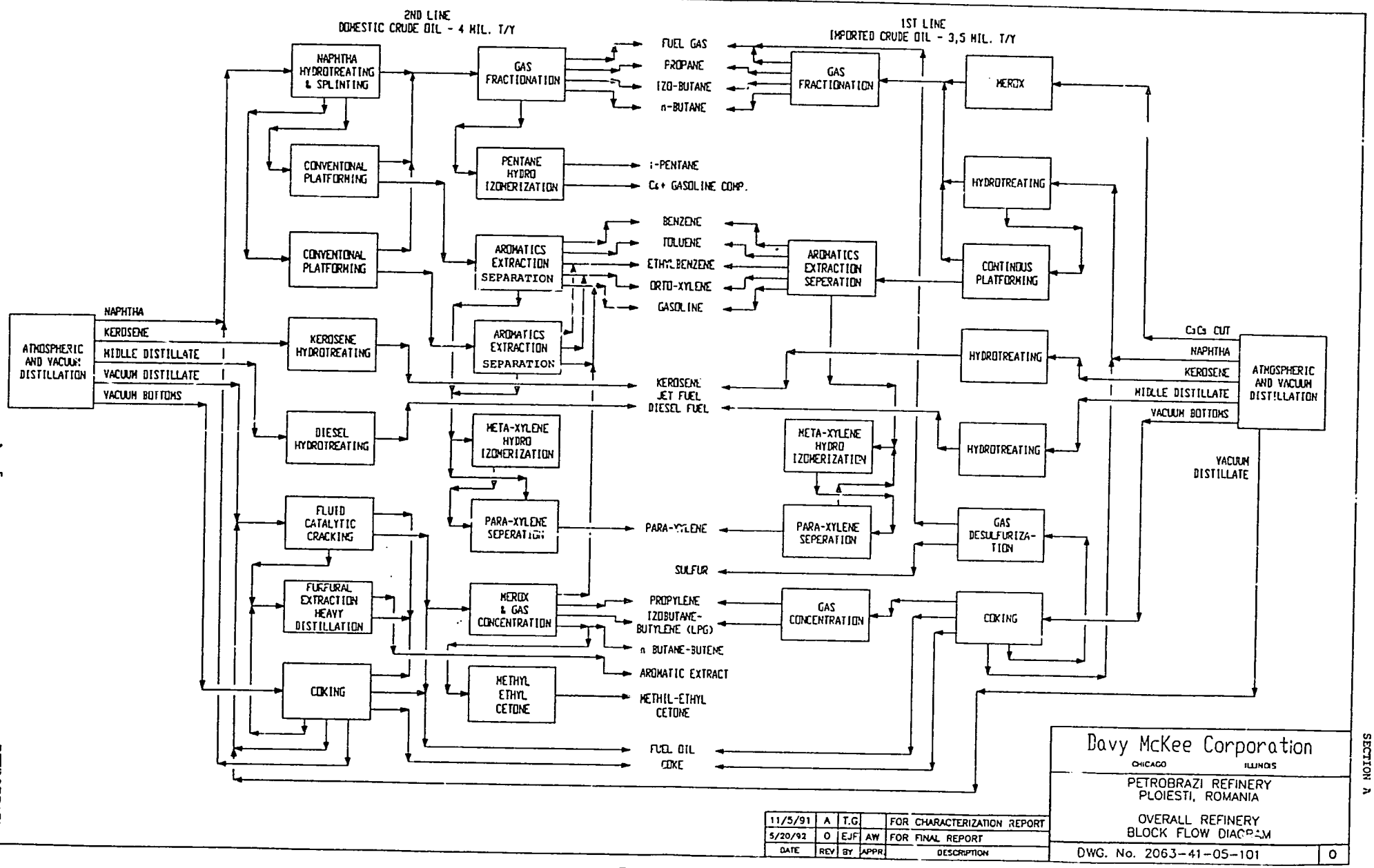

DATE	REV	BY	APPR.	DESCRIPTION
11/5/91	A	T.G.		FOR CHARACTERIZATION REPORT
5/20/92	0	EJF	AW	FOR FINAL REPORT

Davy McKee Corporation
CHICAGO ILLINOIS

PETROBRAZI REFINERY
PLOIESTI, ROMANIA

OVERALL REFINERY
BLOCK FLOW DIAGRAM

DWG. No. 2063-41-05-101 | 0

FIGURE 1

5. TYPES OF ENERGY IMPROVEMENT OPPORTUNITIES

Section J of this evaluation report recommends refinery additions or modifications that have the potential to achieve significant energy improvements. The presentation includes, in most cases, the capital costs and expected savings justifying the expenditures according to the three categories of Section A.1. Other recommendations, investigative in nature, might lead to a substantial return on investment.

A summary of these suggestions is as follows:

- Heat utilization efficiency improvements - Improve the insulation of piping valves and equipment; consider a short-term test to reduce desalter water use, coupled with an improved demulsifier; keep flue gas analysis under close study to ensure efficient combustion; and test reduction of stripping steam in the vacuum and the crude towers. Study the waste heater boiler tube corrosion to improve heat recovery unit's on-stream time; monitor the heat exchanger energy fouling trends; and perform an energy audit on the FCC unit.

- Operational changes - Improve on-stream time and reduce maintenance costs through use of corrosion resistant material in the Ljungstrom air preheaters. Consider addition of a visbreaker for vacuum residue and a crude pre-flash tower.

- Operating efficiency improvements - Study use of variable speed drives and trim impellers on high head pumps. Investigate use of a power recovery turbine in high pressure liquid let-down service of the gas oil hydrotreater.

- Acquisition of software - Acquire software for simulation of refining processes, linear programming for economical optimization of refinery operations, and a database management system for inventory and historical maintenance record keeping.

6. TYPES OF ENVIRONMENTAL EMISSIONS IMPROVEMENTS

Environmental improvement opportunities are also divided into immediate, medium term and long term categories and are presented in Section K of this report. These recommended environmental improvements are presented in a manner similar to the energy improvement opportunities presented in Section J. The environmental improvements, in addition to improving emission abatement, sometimes are also economically justified.

A summary of the suggested environmental improvements is as follows:

- Investigate the location and extent of soil contamination aimed at removing the source of ground water contamination. Investigate sludge blending to slow reactivation of the existing fluid bed incinerator and investigate the use of the water softening sludge for agriculture purposes.

- Reduce volatile organic chemical emissions to the atmosphere through better management of inter-unit hydrocarbon transfer and tank farm operations. Acquire a portable VOC analyzer for on-site monitoring of emissions. Establish an air monitoring system.

- Implement cooling water hydrocarbon removal activities.

- Investigate the economics of conversion to low nitrogen oxide burners.

- As the refinery moves from natural gas and low sulfur fuel oils to the high sulfur fuels obtained from processing high sulfur crudes, sulfur removal considerations need to be evaluated such as flue gas desulfurization or fuel hydrotreating.

B. REFINERY ENERGY BALANCE

1. OPERATING UNIT ENERGY USE

To properly undertake an appraisal of the relative energy efficiency of the Petrobrazi refinery operations, an effective measure of the performance of typical US refining units was essential. Further, the performance criteria must reflect the improvement occasioned by the energy savings programs of recent years. Two published references describe energy consumptions in the US refining industry based upon surveys and energy audits conducted through the mid 1980s, by which time the US refining industry had recorded energy utilization improvements of about 25 percent from the time of the oil crisis in 1972. Progress in energy efficiency still continues but at a reduced rate of 1 to 2 percent per year.

The US statistics of refinery unit energy demands were presented in the English system of measurement (e.g. BTU per standard US barrel). By convention, European refiners prefer the metric system of measurement (e.g. kcal per tonne). Consequently, a conversion to European practice was made by providing typical API gravity values for unit feedstocks. Further, suitable conversions to basic fuel oil equivalence in kilocalories were made for electric power, steam generation or consumptions, and cooling water circulation rates. In this manner a table of Refinery Unit Energy Demand Criteria was established and used in the assessments of the Eastern European refiner's energy efficiency and performance. The full development of these energy demand criteria is in Appendix E.

The Petrobrazi refinery maintains daily logs for unit mass balances, utilities consumptions, etc. These logs can then be summarized into monthly and annual reports for all consumable items, although this is still performed manually. Computerized record keeping has not been implemented at either the refinery or the petrochemicals operation.

DMC personnel developed rather comprehensive documentation for each unit was developed that included both design and operating factors during the past 12 months for capacity, yields, utilities, and stream properties. Utilities were summarized in both hourly rates and specific consumption data per tonne of unit feedstock. It is to be noted that the Romanians record their fuel consumption values in terms of "conventional fuel," which is defined as the heating value of carbon, 7 000 kcal/kg. Thus, the appropriate data was provided for immediate translation into "Total Energy Demands" for the units in the refinery section of the complex.

At present, Petrobrazi has not yet developed a computerized model of its plant as an operations aid and management tool. Computerization is being planned and, with proper application, could prove be helpful in meeting the refinery's needs in areas such as assembling a comprehensive list of all energy users and generators, maintenance records and schedules, and predicting yield structures, utilities demands, and equipment performance.

A compilation of the utilities consumptions for each of the Petrobrazi sour crude refining units converted to total energy demand was made and compared directly with typical modern day US practice as shown in Table B.1.1. The table shows that the Petrobrazi jet fuel and gas oil hydrotreaters are similar to US energy standards while the data for the Atmospheric/Vacuum Distillation Unit is some 20 percent above the expected US energy demand. The remaining units of naphtha hydrotreating, Platforming, FCC plus gas concentration, delayed coker, and saturated gas plant all show some degree of energy-saving potential.

TABLE B.1.1. - ENERGY EFFICIENCY COMPARISON
PETROBRAZI REFINERY OPERATIONS 1990 COMPARED WITH TYPICAL US OPERATIONS

Unit	1990 Op'G Capacity (tonne/y)	Note	Specific Energy Demands				Petrobrazi Total Energy Demand			Predicted US Energy Demand		
			Fuel (kcal/tonne)	Steam (kg/tonne)	Elect. (kwh/tonne)	CW (m^3/tonne)	kcal/tonne	GKcal/year	%	Kcal/tonne	GKcal/year	%
Atm. Dist. & Vac. Flasher	1 929 500 1 076 200	1	224 000	64.2	7.7	9.1	292 857	565.1	24.7	245 000	472.7	29.8
Naph. Hydrotreat	331 000	2	154 000	190.0	16.5	5.1.	329 837	109.1	4.8	200 000	66.2	4.2
Platformer	254 300	3	959 000	198.0	13.2	19.1	1 140 601	290.1	12.7	950 000	241.6	15.2
Jet Hydrotreat	139 600		157 500		13.7	4.5	193 086	27.0	1.2	215 000	30.0	1.9
Gas Oil Hydrotreat	138 000		151 100		14.7	20.3	238 602	32.9	1.4	215 000	29.7	1.9
FCC & Gas Con.	984 400	4	1 069 250	-221.0	32.2	48.7	1 021 116	1 005.2	43.9	580 000	571.0	35.9
Delayed Coker	167 000		398 300	274.0	21.3	10.2	647 244	108.1	4.7	450 000	75.2	4.7
Set. Gas Plant	135 000	5		1 230.0	17.0	60.0	937 872	126.6	5.5	550 000	74.3	4.7
H_2S Recovery	0	6					0	0.0	0.0	3 650 000	0.0	0.0
Sulfur Plant	0	6					0	0.0	0.0	-1 000 000	0.0	0.0
TOTAL	4 078 800						555 066	2 264.0	98.8	382 600	1 560.5	98.2
% of Crude Run @ 10 000 000 Kcal/tonne (FOE)								11.73			8.18	
Fuel Blend.	1 400 000		ESTIMATES			USE	20 000	28.0	1.2	20 000	28.0	1.8
Complete Refinery Operations								2 292.0	100.		1 588.5	100.
Energy Requirements - % of Crude Run @ 10 000 000 Kcal/tonne (FOE)								11.88			8.23	
Energy Requirements - BTU/BBL Crude Feed @ 6 000 000 BTU BBL (FOE)								712 724			493 977	

(Continued on next page)

TABLE B.1.1. - ENERGY EFFICIENCY COMPARISON (continued)
PETROBRAZI REFINERY OPERATIONS 1990 COMPARED WITH TYPICAL US OPERATIONS

Notes:

1. Unit 100 includes a depentanizer tower operation
2. Unit 120 includes a naphtha splitting
3. Unit 130 includes an aromatics concentration tower operation for petrochemicals
4. FCC Unit includes a propylene and B-B splitter tower operation for petrochemicals
   FCC fuel includes a 7.2 wt% coke burn @ 7 000 KCal/kg
5. Capacity estimated at 50% design for refinery operating rate.
6. H_2S and sulfur plant are not operational
7. Energy conversion factors for fuel to oil equivalents:
   Steam, Kg/h: use 540 Kcal/Kg @ 80% Eff = 675; say 700 Kcal/Kg Steampower,
   KWH: use 860.5 Kcal/KWH @ 35% Eff = 2459; say 2 400 Kcal/KWH
   CW, m^3/h: use 4.41 x 75/2284 x 0.6 = 0.24 KWH/H x 2400 = 579 Kcal; say 600 Kcal/m^3 CW

There are elements included in the Petrobrazi unit designs that should more properly be reflected as petrochemical activities. Thus, the BTX and aromatic concentration towers utilities demands in the Naphtha Hydrotreater and Platformer units should be deleted and not debited against a normal refining operation. Similarly, the propylene and butane-butylene fractionators in the FCC gas concentration unit are operated for their petrochemical values, not strictly for any fuels requirements. Therefore, the indicated Petrobrazi energy demands for basic refinery operations should be decreased from the calculated 11.88 percent FOE value shown.

Unfortunately, appropriate data for these individual operations are is not measured so a verifiable correction cannot be applied. However, it is estimated that the correction should be approximately 10 percent, leading to a Petrobrazi refinery energy demand of approximately 10.5 percent FOE or about 25 percent higher than expected US performance of 8.18 percent FOE. This result is not unexpected considering the low capacity of operations and the grave mechanical difficulties of operations with a lack of spare parts or replacements for some very worn and/or eroded rotating equipment. Frequently enforced shut downs from these causes seriously diminish the energy efficiency of the units involved.

It appears that the high fuel requirements in the FCC unit and the large steam demands for the coker account for most of the energy overruns. A more detailed inspection of operations is necessary to identify the true causes for these discrepancies in energy usages.

Recent evidence shows that continuing energy efficiency efforts in the US have shown approximately a 1 or 2 percent per year improvement during the past 5 years. On this basis, a further 5 to 7 percent decrease in energy demand at Petrobrazi should be expected and could be set as a goal for an energy improvement program based upon cost/benefit principles.

In preparing this report, DMC accepted the reliability and accuracy of the utilities consumption presented by Petrobrazi for its operations. No means of independent verification was readily available. It will benefit the Petrobrazi management to ensure that these data continue to reflect the actual operating performance so corrective action could be instituted wherever deficiencies are detected.

2. FUEL SYSTEMS

2.1 Fuel Sources

2.1.1 Current Status

The Petrobrazi facility uses refinery fuel gas, natural gas, and fuel oil within its fired heaters. Due to the proximity of the National Grid Ploiesti Power Station, fired with nearly pure methane natural gas from nearby wells, there is no need for a dedicated Petrobrazi power plant facility nor currently for heavy fuel oil supplies. However, the natural gas supply is in decline so alternative fuels will be needed in the future. Fuel gases are derived from both refinery and petrochemical operations. In addition, the team was informed that considerable quantities of waste flare gas are recovered and compressed to the fuel gas system which is a direct energy saving concept. Apparently the compression facilities have been extended with good results. This implies a possibility that substantial quantities of recoverable gases have been directed to the flare headers through upset, leakage, or other cause. Table B.2.1.1 contains typical fuel characteristics, while Table B.2.1.2 shows the source design basis of refinery fuel gas.

TABLE B.2.1.1 - TYPICAL FUEL CHARACTERISTICS

Property	Refinery Gas	Natural Gas	Fuel Oil
Composition, Vol %			
H_2S	0.5 - 1.9	trace	
H_2O	---	trace	1.0 vol% max
CO	0.33 - 0.45	-	
CO_2	0.44 - 0.5	0.5	
O_2	0.02 - 0.06	-	
N_2	0.25 - 0.3	0.2	
H_2	6.2 - 7.0	0.1	
C_1	22.1 - 30.0	99.1	
C_2 (1)	12.0 - 16.0	0.1	
C_3 (1)	13.3 - 21.0	-	
C_4 (1)	14.7 - 24.0	-	
C_5 (1)	5.0 - 7.9	-	
C_5+	5.0 - 13	-	
TOTAL	100	100	
Viscosity-Engler Deg.			40 max at 50°C
Pour point °C			45 max
Flash point °C			90 min
Conradson Carbon %max			14
Sediment vol%			1.2
Water & sediment wt% max			1.5
Ash wt% max			0.5
Sulfur wt% max			1
Heating value kcal/kg	11 300		9500 (net)

(1) C_2 through C_5 as shown are mixtures of saturated and unsaturated gases

TABLE B.2.1.2 - REFINERY FUEL GAS SOURCE

Refinery Unit	Design Generation Rate (Nm^3/hour)
New Refinery	
M-xylene isomerization	700
Gas absorption and fractionation	7 400
Amine treat/sulfur recovery	6 700
Gas fractionation	1 200
Catalytic reforming	835
Total New Refinery	16 835
Old Refinery	
Catalytic reforming	10 216
Xylene separation	419
FCC	11 481
Hydrobon	1 037
Gas Absorption & Fractionation	15 971
Total Old Refinery	39 124

2.1.2 Future Supply

The natural gas reserves in Romania are being depleted. The future fuel source will be heavy residuals from the vacuum distillation tower. These residual fuels will have high metals and high sulfur content that probably will affect the flue gas monitoring, flue materials, and waste heat recovery materials.

An alternate future fuel supply considers coal firing the power plant adjacent to the refinery, then supplying high pressure steam for heating in lieu of fired equipment. This alternate requires consultation and study and high cost capital equipment.

2.2 Fuel Distribution

Fuel oil generated by the refinery consists of atmospheric distillation reduced crude, coker residue, coker gas oil cut No. 2 for viscosity adjustment, and cat cracker gas oil cut No. 2. There is a central fuel oil tankage facility in the new refinery that sends the oil to individual tanks within the units that consume fuel oil.

The natural gas is piped to the refinery and then distributed to the gas burners in each unit.

The fuel gas lines are not steam traced, however they are sloped to avoid condensate accumulation, and there are several knock-out pots in the system for liquid entrainment.

2.3 Fuel Users

The crude distillation units, Platformer and the FCC unit, account for the major consumption of fuel energy. Another significant user is the Delayed Coking Unit with relatively small demands from the Naphtha, jet fuel and gas oil hydrotreaters. Table B.2.3 shows the design basis fuel consumption.

No records are available regarding the amount of atomizing steam used in the oil burners though it was mentioned that more efficient burners would be welcome. Burner improvements are recommended. A decrease in atomizing steam consumption would not only be a direct saving of energy costs but it should also help raise the flue gas dew point level, which would be helpful since severe sulfur dioxide corrosion is a continuing problem.

TABLE B.2.3 - FUEL CONSUMPTION DESIGN BASIS

Refinery Units	Fuel Gas (Nm^3/h)	Fuel Oil (kg/h)
Atmospheric/vacuum	1 500	14 200
Naphtha HDS	830	2 750
Kerosene HDS	1 050	---
Diesel HDS	1 803	---
Catalytic reforming	3 000	2 400
Ethyl benzene	2 100	1 600
Aromatic extraction	146	---
BTX fractionation	100	500
m-xylene isomerization	190	3 000
p-xylene separation	525	2 200
Coking	190	4 200
Amine treat/sulfur recovery	685	---
Flare	200	---
Biological waste water treatment	1100	---

3. STEAM SYSTEM

3.1 Steam Generation

Steam supplies are derived from the adjacent power house though supplemented by a high degree of process and waste heat generation within the refinery facilities.

Refer to Table D.4.1.1. for a summary of new refinery heat recovery steam generation rates.

3.2 Steam Levels

Steam is distributed and utilized at the three nominal pressure levels of:

3.5 MPa in the high pressure system
1.5 Mpa in the medium pressure system
0.4 Mpa in the low pressure system

Nevertheless, pressures appeared to vary throughout the plant by as much as 0.2 Mpa.

3.3 Steam Users

High pressure 3.5 Mpa steam is utilized as motive steam to certain turbine driven equipment and via desuperheating pressure reduction stations to balance the supply of medium and low pressure steam. The major refinery use is for stripping steam, light ends reboiling, line tracing, and space heating during the winter. It was reported that clean condensate returned to the power house was about 40 percent. Insulation was said to be applied to the Romanian norm of surface temperatures of 60°C and over.

4. ELECTRIC POWER SYSTEM

4.1 Electricity sources

The old refinery is fed with electric power directly from the nearby national grid power station through three 35 kV underground cables, all interconnected and leading to four 35/6 kV transformers.

The new "Sour Crude" refinery is fed by two 110 kV cables feeding two 110/6.3 kV transformers.

4.2 Electric Distribution System

Power at the 6 kV level is distributed from the two main 110 and 35 kV substations to all unit substations by two feeders except for catalytic reforming substation, which has three feeders. For the old refinery, all feeders are direct burial underground copper cables. Due to a highly contaminated soil, cables suffer from corrosion so the cables in the new refinery are run in above ground trays.

4.3 Electric Power Users

Appendix F includes Tables App. F.1.a., b., and c., which show the monthly electrical energy consumption for each process user during calendar year 1990.

5. COOLING WATER SYSTEM

5.1 Water Source

The cooling water and boiler feed water is pumped from water wells and mountain reservoirs. The quality of the river water is deteriorating because of increasing dissolved solids content. Prior records (1 to 3 years) indicate the TDS at the source has been 1 kilogram per 20 tonnes (50 parts per million), but recently it has been as high as 1 kg per 5 tonnes (200 ppm). The water treating at the refinery has been capable of de-mineralizing this TDS but at added expense.

5.2 Typical Cooling Towers

Induced Draft Cooling Towers

The Petrobrazi refinery has eight cooling tower blocks. Each block has twelve sections. The #2 distillation unit was not operating during the DMC team visit, thus the cooling load was not typical. The cooling performance on 19 July 1991 was:

Inlet water temperature:	35°C
Water basin temperature:	26°C
Ambient temperature:	19°C
100% humidity (light rain)	

Fan motors are 22 KW, 730 RPM, 380 V, 3 phase, 50 Hz. The fans are gear box driven. The gear box is located on the center of the fan trunion bearing; corrosion is evident on all the gear boxes. The motor is connected through a long shaft having two universal joints.

There are no high limit vibration switches. The fan blades are essentially fixed pitch; manually adjusted by a maintenance technician.

The cooling towers are constructed with reinforced concrete. The packing is corrugated asbestos sheet. The packing material is less durable than desired.

The fan motors are reversible for winter de-icing. When freezing ambient temperatures are encountered the fans are stopped.

The quality of the circulating water on 19 July 1991 was poor. The water appeared opaque brown, obviously contaminated with hydrocarbons. See Immediate, Minimum Cost Opportunities, Section J, for recommendation.

Natural Draft Cooling Towers

Approximately half the cooling load for the Petrobrazi Refinery is accomplished in natural draft cooling towers. The performance is about the same as the induced draft towers described in 5.2.1. Asbestos shingle plates are used for packing.

The quality of water in the natural draft towers is poor - murky brown.

The Reformer #2 cooling tower's packing is not holding up. Approximately half the tower is usable; however, full duty flow is directed over the remaining packing. The reformer was not operating at normal flow rate on 19 July 1991; therefore, the tower performance was not typical. Table B.5.2.2 contains selected hyperbolic cooling tower design data.

TABLE B.5.2.2 - HYPERBOLIC COOLING TOWER DESIGN BASIS

	Catalytic Reforming I	Catalytic Cracking	Xylene Productio n	Catalytic Reforming II
Number of units	1	1	2	1
Temp. gradient, max °C	10	10	10	10
Make-up water	soft	soft	soft	soft
Number of pumps	4	5	3	3
Pump capacity, m^3/h	3 500	3 000	3 000	---
Pump pressure difference, mm H_2O	58	70	---	58
Driver size, kw	800	515	---	800
Treatment				
Corrosion inhibitor	yes	yes	yes	yes
Chlorination	yes	yes	yes	yes
Biocidation	yes	yes	yes	yes
Cleaning	yes	yes	yes	yes
Blowdown to oily sewer system, all units				

5.3 Water Treating

The raw water is treated by ion exchange, clarified, and then used in the cooling system. Raw water is softened prior to use as make-up water in the cooling towers. Table B.5.3.1, below, summarizes the raw water treatment schemes.

TABLE B.5.3.1 - RAW WATER TREATMENT SUMMARY

Source	Purpose	Treatment
Paltinu	Potable	Not Treated
Nedelea		Coagulation Flocculation Settlement, 4 settlers
Tirgsor Thermal Power Station and Paltinu		Not Treated
Paltinu	Demineralization	Quartz sand bed Ion exchange CO_2 removal in degasifier Alkalinization to pH 8.5
Demineralized water (Decationated water)	3.5 MPa steam	Retain strong anions Retain weak anions & release chlorine Finishing on highly acid catonic and basic anions resin mixture

6. AIR COOLERS

A typical cooling fan unit condenses gasoline in the #2 Distillation Unit. Its operating parameters are:

Type of drive: v-belt; (3) strand
Motor: 55 KW; 380 V; 3 phase; 50 Hz
8 sections
Manually set louvers
Manually set variable blade pitch
Flow rate: 875 000 tonnes/year
Hydrocarbon temp in: 120°C
Hydrocarbon temp out: 50°C

7. ENERGY RECOVERY SYSTEMS

7.1 Process Heaters

The process heaters have steam generation for energy recovery. A typical example is illustrated in Table B.7.1.

TABLE B.7.1 - TYPICAL OPERATION OF PROCESS HEATER

Date of data	17 July 1991
Heater tag number	F1 and F1A
Heater location	Crude unit #1
Crude flow rate	190 m^3/h
Crude inlet temperature	178°C
Crude/vapor out temperature	323°C
Heater fuel used	natural gas
Fuel flow rate	not available
Steam production rate	6 tonnes/h
Steam pressure	0.3 MPa
Steam temperature	400°C
Flue gas oxygen content	4.5%
Flue gas temperature	362°C
The following information was calculated from the above data:	
Estimated efficiency	81.8%
Estimated firing rate	79.1 kJ/h
Estimated process heating duty	53 kJ/h
Estimated heat recovery: steam production	11.06 kJ/h
Estimated actual energy recovery percent	13.98%
Estimated practical limit energy recovery percent (based on flue gas temperature safe from sulfur corrosion)	25.52%

From the above table data and calculations it may be concluded that energy recovery could be enhanced by:

- Adjusting the air dampers on the burners until the flue gas oxygen content is between 1.3 percent to 2.1 percent with no smoke or carbon monoxide formation. Energy improvernent: 3 percent.

- Installing a low pressure steam coil to the flue stack and by reducing flue gas exit temperature from 362°C to 177°C. Energy improvement: 11.5 percent.

Dual fuel burners will be required in the future as natural gas resources in Romania are being depleted.

7.2 Fluidized Catalytic Cracking Unit

Energy recovery provisions in the FCCU include heat exchange and heater steam production. However, the unit was not operating at the time of inspection. No actual data was recorded for operating condition. Refer to Section J for long term opportunities including the addition of a turbine expander to generate approximately 10 MW electric power.

C. REFINERY FLEXIBILITY

1. OVERVIEW

1.1 General

The Petrobrazi refinery employs a combination of air and circulating water cooling. The majority of drives are electric, though some large compressors are steam-turbine driven. The process units are arranged in widely spaced individual blocks allowing very convenient access but also involve considerable initial installation expenses and running costs necessitated by the increased length of process and utilities piping/cabling runs. This arrangement also requires numerous flue gas stacks and suitable waste heat recovery systems for enhanced energy economy.

1.2 Crude Composition

The refinery receives a blend of imported sour crudes that is usually in range of 0.86/0.87 specific gravity (31-33° API) although individual cargos may vary from 22 to 40° API (0.825-0.923 Sp.Gr.). Crude characteristics are contained in the table at the end of the Appendix A. If the wide variations in feedstock gravity can be controlled to the extent of the gravities shown above, the distillation sections of the plant should not be greatly affected. Of greater concern will be the PONA (Paraffin, Olefin, Naphthene, Aromatics) analysis of the lighter fractions and the total sulfur content of the crude blend. The PONA ratios are of considerable importance to the aromatics yields and octane improvement level achieved by the reforming unit.

The sulfur content would influence the hydrogen balances throughout the refinery. It would not only be an element of some concern regarding the final products quality and specification values in respect to the degree of desulfurization achieved, but also in respect to the corrosion level likely to be experienced by the plant equipment. However, it is expected that all these elements will be maintained within reasonable limits. Extreme variations could cause both expected and unforeseen difficulties, as well as being unprofitable at both the local and national levels.

1.3 Crude Charge Rate

The Petrobrazi refinery is operating well below its design rating (55 percent) for the imported sour crude section of the plant. This also leads to certain inefficiencies in operations and cost due to the shutdowns enforced by lack of feedstock and also due to the long periods of downtime. When operating, the DMC team was informed that the throughput averaged about 75 percent of design, which should ensure reasonable efficiency levels. However, the operational profitability would be greatly enhanced at normal operating rates nearer the design figure of 3.5 million tonnes per year. If necessary, with block operation the charge rate could be increased to 110 percent of design since this is generally the minimum safety factor employed in any design effort. Any limiting equipment items that might be identified could quite readily be improved or replaced if the need arose.

1.4 Product Splits/Volumes

Moderate shifts in the existing product splits could be accommodated as long as they could still meet with normal world-recognized petroleum product specifications, especially the flash point. What is important is the enhancement to profitability of operations by optimizing product splitting schemes depending upon market conditions. This can only be determined with some certainty by linear programming techniques.

In this respect, the production of petrochemical feedstocks do appear to involve a sophisticated product splitting arrangement. It was not established how the transfer pricing for intermediate stocks was determined or if the preparation of these products was beneficial or detrimental to the refineries overall financial position.

A significant element to refinery energy efficiency is associated with material loss control. In the US, an accepted goal of good refinery practice is to contain hydrocarbon losses to within the region of 0.5 weight percent. This figure represents unavoidable or unrecoverable losses sustained through process unit upsets, start-up or shutdown flarings, leakage or spillage, "fugitive" emissions from tankage or vents, etc. It is the refinery operations' task to keep all these losses to a bare minimum consistent with the design and condition of equipment.

The consumption table for the Petrobrazi refinery during the year 1990 lists unit feed rates but unfortunately does not indicate the calculated loss rate for the overall refinery operation.

However, loss figures were provided for the operation of the major units, and from these values we can calculate an overall refinery loss value of 2.48 weight percent for the process operations. This value, of course, cannot incorporate any further losses that are likely to occur in product transfers to and from intermediate and final product storage or from the storage tanks themselves. This information indicates that substantial improvements in loss control should be possible at the Petrobrazi refinery with closer attention and operating vigilance in operating practices. However, we would accept also that the poor condition of equipment will be a contributing cause to these losses until reconditioning can be effected. Of course, it is also possible that the mass balance accounting could be in error through the lack of suitably calibrated instrumentation. We wish to point out that, if proved, these losses represent a very significant opportunity for energy recovery as well as a direct financial loss. For example, if, at the design operating rate of 3 500 000 tonnes per year, the losses could be reduced from the approximate figure of 2.5 weight percent to the more acceptable value of 0.5 weight percent, a recovery of 70 000 tonnes per year of hydrocarbons will result worth about $4 500 000 when valued as fuel oil (3 925 Lei/tonne at 1 US $ = 60 Lei). We therefore recommend undertaking an in depth review of the refinery mass accounting system with the correction of all deficiencies that may be found.

The calculation for the refinery loss accounts for the reported 1.1 weight percent loss documented by the refinery for the Crude/Vacuum Unit. The loss rises to 1.5 weight percent by difference of the reported yields for all other products. On this basis, the projected refinery processing loss would rise to 2.88 weight percent.

1.5 Product Specifications

The Petrobrazi refinery is constructed with a considerable degree of flexibility for the production of automotive fuels and petrochemical feedstocks from either or both domestic sweet crudes or imported sour crudes.

For gasoline products, the Platformers, the fluid catalytic cracking unit, and the USSR pentane isomerization unit all offer suitable opportunities for octane improvement in the gasoline pool to comfortably meet the 95 RON premium grade and 87 RON regular grade gasolines at a maximum 0.6 gram per liter lead content in the home market. However, it was reported that there could be difficulties in meeting the specification requirements in export markets for high octane gasolines with low or no lead contents. For this reason, discussions are underway with UOP for converting the Platforming Unit No. 130 to a Continuous Catalytic Reformer (CCR) to attain the higher severities necessary for high octane blending stocks. It is noted that due to aromatics extraction, the gasoline pool will be very low in benzene.

For the light and middle distillate streams the atmospheric distillation unit is well able to control the boiling ranges and flash points of jet and diesel oil streams which are subsequently further hydrotreated for the control of sulfur content to within the maximum specification levels.

2. ATMOSPHERIC/VACUUM DISTILLATION UNIT 100

2.1 Process Flow Diagram

A simplified process flow diagram is shown in Figure No. 2.

2.2 Feedstock

The unit was designed for processing a 50/50 blend of Iranian Agha Jari/Gach Saran high sulfur crude oils. Currently the unit operates with an undefined mix of Middle Eastern crudes that average 0.86-0.87 specific gravity. Refer to Appendix A for a table of selected crude properties. It is expected that any future selections of crude feed will be dictated by the need to control the sulfur content for environmental reasons and a reasonable aromatic production capability in the naphtha fractions for the supply of petrochemical feedstocks.

2.3 Flexibility

There would appear to be no difficulty in operational flexibility consistent with temperature and pressure limitations and maximum vapor load criteria as the fractionators are equipped with valve trays permitting turn down to levels in the region of 30 to 40 percent. The equipment metallurgy, designed for processing sour crudes, should permit the handling of even high naphthenic acid content South American crudes.

2.4 Operational Sensitivity

Any variation in crude composition could be accommodated consistent with the design criteria and equipment capacity limitations for the production of both petrochemical precursors and automotive fuels.

2.5 Product Specifications

The naphtha fraction is subsequently hydrotreated and refractionated for heart-cut Platforming to aromatic rich or full range reformate gasoline blending stocks. Consequently, the main specifications to be met and controlled at the crude unit are the boiling ranges of the kerosene and light/heavy gas oil fractions and the

kerosene/light gas oil flash points. In addition the color, viscosity, and pour point of the heavy gas oil are of importance to final blended diesel specifications and to minimize any losses of straight run diesel oil components to the vacuum distillate FCC feedstock stream. Table C.2.5. includes selected product characteristics.

TABLE C.2.5. - CRUDE/VACUUM UNIT

SELECTED PRODUCT CHARACTERISTICS

Characteristic	Naphtha	Kerosene	Kerosene II	Gas Oil I
Density at 15°C	0.731	0.79-0.81	0.813	0.857
Dist. Range, TBP, °C	60-180	180-250	240-280	280-340
Sulfur, wt%	0.1231	0.25	0.70	1.30
Nitrogen, ppm	---	1.2	---	---
Molecular Weight	---	160-180	---	---
Viscosity, CS at				
20°C	---	---	1.4	---
50°C	---	---	0.8	4.5
100°C	---	---	---	1.8

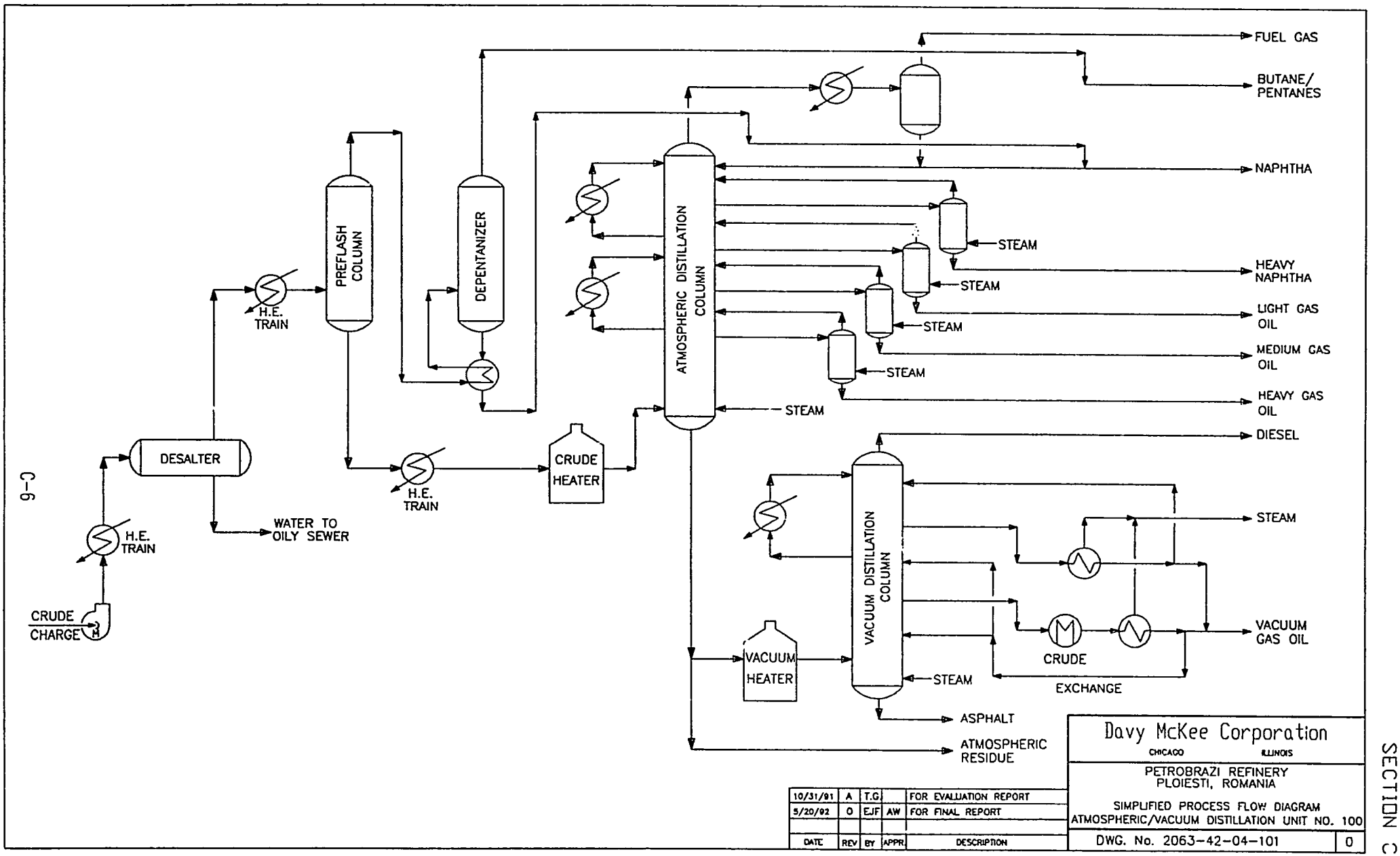
FUEL GAS
BUTANE/ PENTANES
NAPHTHA
HEAVY NAPHTHA
LIGHT GAS OIL
MEDIUM GAS OIL
HEAVY GAS OIL
DIESEL
STEAM
VACUUM GAS OIL
ASPHALT
ATMOSPHERIC RESIDUE
ATMOSPHERIC DISTILLATION COLUMN
VACUUM DISTILLATION COLUMN
PREFLASH COLUMN
DEPENTANIZER
DESALTER
CRUDE HEATER
VACUUM HEATER
H.E. TRAIN
WATER TO OILY SEWER
CRUDE CHARGE
CRUDE
EXCHANGE
Davy McKee Corporation
CHICAGO ILLINOIS
PETROBRAZI REFINERY
PLOIESTI, ROMANIA
SIMPLIFIED PROCESS FLOW DIAGRAM
ATMOSPHERIC/VACUUM DISTILLATION UNIT NO. 100
DWG. No. 2063-42-04-101
0
10/31/91 A T.G. FOR EVALUATION REPORT
5/20/92 0 EJF AW FOR FINAL REPORT
DATE REV BY APPR. DESCRIPTION

FIGURE 2

2.6 Unit Yields

The cut points for both atmospheric and vacuum distillations are somewhat less than conventional US practice and particularly for the preparation of cracker feedstock. However, the sulfur content of the residue must be a consideration in the Petrobrazi planning and operations.

The indicated loss level is excessive and steps need to be taken to decrease the loss to a more acceptable value. Table C.2.6. show the unit product yield design basis contrasted with reported actual performance for 1990.

TABLE C.2.6. - ATMOSPHERIC/VACUUM DISTILLATION UNIT 100
DESIGN BASIS PRODUCT YIELDS*

Product	Design Basis* At 8 000 hours/y			Reported 1990*
	Quantity		wt%	wt%
	tonnes/year	kg/hr		
Fuel Gases	10 000	1 263	0.28	---
C_2-C_5, 15-65°C	78 000	9 848	2.23	0.5
Gasoline, 65-180°C	670 000	84 596	19.14	16.5
Kerosene I, 180-240°C	336 000	42 424	9.60	---
Kerosene II, 240-280°C	254 000	32 041	7.26	2.2
Gas Oil I, 280-340°C	350 000	44 192	10.00	23.4
Gas Oil II, 340-360°C	122 000	15 404	3.48	4.0
Vacuum Dist., 360-525°C	800 000	101 010	22.85	15.4
Vacuum Resid., 525+°C	852 000	107 576	24.33	36.5
Losses	28 000	3 535	0.83	1.5
TOTAL	3 500 000	441 889	100.00	100.0

* The design basis for the data in Table C.2.6 is a 50/50 split of Agha Jari and Gach Saran crudes. In 1990, the reported crude was 35.7% Romanian and 64.3% of an undefined mixture of Middle Eastern crudes with a specific gravity of 0.86 to 0.87, at 1 929 500 tonnes throughput.

2.7 Unit Modification Potential

The unit layouts are generally spacious and good access is available from the perimeter and to individual items of equipment. Therefore, few problems should exist in carrying out advantageous energy-improving modifications.

2.8 Capacity Increase Potential

Conversion of the existing valve tray systems, where currently restrictive to vapor/liquid tower traffic, to suitable structured packings reportedly has been evaluated by Eastern European industrial sources to increase capacity by 10 percent with Romashinko crude. With other crude supplies, a further, more detailed examination would be recommended, but it could be expected that a potential increase to 120 percent of the original flooding rate of the tower could be achieved for the distillate fractions. To accomplish this rate, however, it is assumed that improved crude preheating arrangements would have been fulfilled so that the design duty of the heater(s) would not be exceeded. In addition, it is assumed that the pumps/motors would be able to provide the necessary equipment pressure drop while still maintaining flow controllability.

2.9 Operating Practices

Operator attention is given to maintaining reasonable excess oxygen levels (3 to 6 volume percent) in the heater flue gas by manual adjustments at the air registers, based upon orsat analyses.

The oil fired and air preheated atmospheric and vacuum heaters operated at a 6 to 7 volume percent excess oxygen level based upon periodic orsat analyses (3 times per week) due to the inaccuracy of the installed East German oxygen analyzers. It was further stated that this oxygen level was considered the most stable position since there was a tendency for smoke at lower oxygen contents though we stated 3 to 4 volume percent should be achievable.
Desalting water from the vacuum tower jets is injected into the fresh crude at a rate of 3-4 weight percent after heat exchange against the hot salty water reject stream. Desalting was not especially effective at about 75 percent reduction due to the unavailability of suitable desalting chemicals. Another reason that was given was that sufficient time for settling in storage was not possible because of the need to process the crudes immediately or shortly after receipt.

The crude exchanger train did not appear to have recovered an optimum amount of preheat since the hot vacuum unit streams were utilized solely for steam generation. Therefore, it might prove useful if the preheat train were reexamined by an expert "Pinch" technology analysis to determine if a more efficient exchanger arrangement would be economically feasible.

Since the Atmospheric/Vacuum Distillation Unit is a major refinery energy consumer at 25 percent of the total refinery expenditure some significant opportunities could exist for improvement. It is noted that the atmospheric tower overhead vapor stream is condensed against air and water. It is possible that a simulation of this tower's operation may reveal opportunities of useful heat recovery by introducing a top pump around reflux or preflash tower arrangement. Such ongoing studies could pinpoint possibilities for gaining additional preheat and a higher temperature to the atmospheric heater coils.

The crude feed pumps develop a high head that is being throttled to balance control valve pressure drop in the circuit. Due to operations considerably below the design rate, this problem is accentuated. The pump impeller could be trimmed to decrease the difficulties and save power. However, we were advised that a national program is being instituted for the introduction of variable speed electric motors for all services rated at 50 KW or above. This would appear to be quite beneficial to any energy saving program, but it would be most interesting to establish the cost/benefit strategy for such a wide ranging rather than a selective program. Also, it needs to be determined exactly when the program is to be implemented at Petrobrazi and if selected drives should be modified before this. Also see Section F, Table F.3.4.1. for typical pump operation.

An atmospheric tower overflash of 3-5 weight percent was indicated as the normal operating mode and apparently based upon design considerations together with stripping steam rates of 2-3 weight percent for the side streams and bottom product. We believe the stripping steam rates to be quite reasonable but suggested the degree of overflash should be reduced somewhat as long as the recovery and specification of the heavy atmospheric gas oil was not jeopardized. A good balance of overflash and stripping stream can yield useful energy savings and should be a matter of continuous attention so that product streams do not greatly exceed specification requirements.

As declining natural gas supplies must soon be supplemented by heavy fuel oil firing it would seem prudent to investigate the best selection of low NO_x single or dual fired burners for gradual replacement of existing equipment.

A further study has been carried out for converting the existing "wet" vacuum tower to a "dry" vacuum flash system to achieve lower vacuum levels and a deeper vacuum gas oil cut point for maximizing FCC feedstock production. In addition, the conversion of steam jets to mechanical vacuum pumps should be closely reviewed and evaluated. This approach would have the benefit of sharply reducing the steam consumptions thus enhancing the energy economics of the unit still further. It was noted that the vacuum gas oils are normally sent hot to the FCC unit, which is good practice.

Another commendable energy program for recovering low level heat for use as district heating to the town of Ploiesti was also described by the refinery. Apparently, the existing district heating system has been inadequate in recent years so the further recovery of the refinery reject heat would be helpful and beneficial. To avoid any possibilities of cross contamination, an interchanger system is being devised similar to systems already in successful operation at other Romanian refinery installations. This scheme appears to be especially imaginative and effective in terms of energy recovery, but again no data can be presented regarding the cost/benefit aspects of the system or when the scheme is scheduled for practical implementation. Nevertheless, the existence of the plan is to be applauded since it will be of great benefit to the local people and avoid much of the large, wasteful low level energy losses associated with the air and water cooling systems.

3. PLATFORMER UNIT 130

3.1 Process Flow Diagram

Process Flow Diagram (Simplified) is shown in Figure No. 3.

3.2 Feedstock

The reformer feedstock for the design capacity of 500 000 tonnes per year consists of a hydrotreated straight run naphtha from the Petrobrazi Atmospheric Distillation Unit supplemented by additional naphthas imported from other refineries (see Table C.3.2.1.). Some 16 percent of coker naphthas are included in the hydrotreating step.

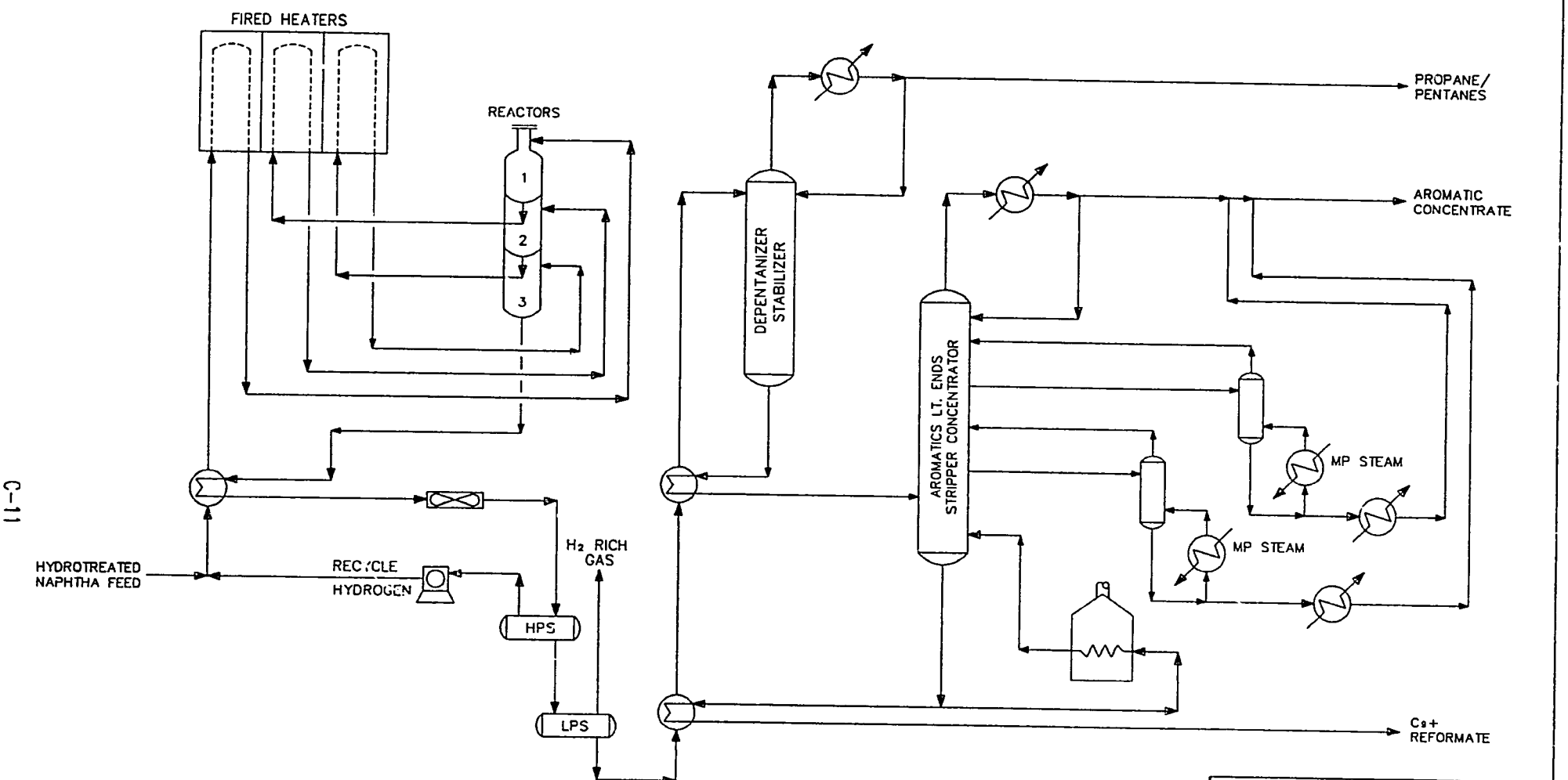

DATE	REV	BY	APPR	DESCRIPTION
10/31/91	A	T.G.		FOR EVALUATION REPORT
5/20/92	0	EJF	AW	FOR FINAL REPORT

Davy McKee Corporation
CHICAGO ILLINOIS

PETROBRAZI REFINERY
PLOIESTI, ROMANIA

SIMPLIFIED PROCESS FLOW DIAGRAM
CATALYTIC REFORMING UNIT NO. 130

DWG. No. 2063-42-04-102 | 0

FIGURE 3

TABLE C.3.2.1. - PLATFORMER UNIT 130
DESIGN BASIS AND FEEDSTOCK CHARACTERISTICS

Feedstock	tonnes/year	kg/hr	wt%	Reported 1990 tonnes/y
Hydrofined Naphtha	502 000	63 385	71.5	240 000
Transferred Reformate	200 000	25 252	28.5	13 500
TOTAL	702 000	88 637	100.0	253 500

Distillation Range	C_6 - 160°C
Density at 15°C	0.730-0.745
Paraffins, Vol%*	59-70
Naphthenes, Vol%	20-27
Aromates, Vol%	10-14
Sulfur, ppm wt. max	1
Nitrogen, ppm wt. max	1
Water, ppm wt. max	5
Lead, ppb wt. max	20
Arsene, ppm wt. max	1
Copper, ppm wt. max	20

Additional supplies of reformate from other refineries are imported for concentration of a heart-cut for aromatic extraction in the fractionation facilities included within the Platforming unit flow scheme. Because of this aromatic extraction feature, the calculated energy demand for the unit will be higher than would be expected for US practice.

3.3 Flexibility

The conventional fixed bed reforming reactor system employing a 0.3 weight percent Platinum/Rhenium bimetallic catalyst was stated to have been undersized for attaining the design capacity space velocity/severity levels necessary for treating Middle Eastern stocks successfully to 95+ octane levels. Consequently, arrangements are now underway to convert the unit to a Continuous Catalytic Reforming (CCR) system. In this respect, the problem may not be especially severe as the plant is currently operational at a partial annual capacity level of about 50 percent. The hydrogen rich gas recycle compressor is steam turbine driven with a portion of the 3.5 MPa steam requirement generated by flue gas waste heat boiler.

3.4 Operational Sensitivity

It appears that a variety of crude blends could be processed at Petrobrazi so the reaction severity and product yield distribution could vary quite markedly if the PONA (Paraffin, Olefin, Naphthene, Aromatic) analysis of the naphtha fraction fluctuates very widely. Furthermore, these fluctuations will reflect changing BTX (Benzene, Toluene, Xylene) contents in the reformate and thereby affect the fractionating stability and efficiency of the aromatic concentration tower.

3.5 Product Specifications

The major concern in reforming is to achieve the necessary RON octane levels in the reformate to meet gasoline pool specifications with or without the permitted tetraethyl lead content. The reactor severity level required to accomplish this is entirely under operator control (space velocity and temperature) as long as the catalyst activity is satisfactory. Operator attention is also necessary for optimizing the run length and regeneration schedule.

3.6 Unit Yields

The unit yields were provided by the refinery. The yield structure indicates severe operations are needed to achieve the concentration of aromatics desired in downstream aromatic recovery operations. Unfortunately, neither the octane level of the feedstock nor that of the C_5+ product were revealed. However, the PONA of the feedstocks did indicate paraffin levels in the range of 59 to 70 volume percent which normally requires severe reactor conditions to obtain satisfactory conversions. Table C.3.6. shows typical unit yields along with reported 1990 actual performance.

TABLE C.3.6. - PLATFORMER UNIT 130 UNIT YIELDS

Product	Planned Operation			Reported 1990
	Quantity		wt%	wt%
	tonnes/year	kg/hr		
Aromatic Concentrate	455 390	57 499	64.9	52.0
C_9+ Cut	146 200	18 459	20.8	29.5
Hydrogen Gas	49 000	6 187	7.0	2.5
C_3-C_6 Liquid Cut	37 350	4 716	5.3	8.0
Fuel Gas	10 040	1 268	1.4	7.0
Losses	4 020	508	0.6	1.0
TOTAL	702 000	88 637	100.0	100.0

3.7 Unit Modification Potential

As mentioned earlier, discussions have started with UOP for removing the limitations of the existing stacked reactor system with a revised and improved continuous catalytic reforming reactor arrangement together with any necessary revamping to the remaining sections of the present plant.

3.8 Capacity Increase Potential

It was claimed that the Platformer Unit reactor system space velocity for design is 50 percent higher than acceptable for the quality of feedstocks being run. Therefore it is concluded that there is no possibility for increasing throughput capacity without accepting decreased octane levels in the product. It was stated that the unit could only achieve, at best, a research octane rating of 97 RON whereas a capability to reach 102 RON was expected. This explains the desire to modify the unit as described in Section C.3.7.

3.9 Operating Practices

It was stated that operators maintain excess oxygen levels in the heater flue gas in the region of 3 to 4 volume percent using an East German oxygen analyzer with check readings by orsat.

The unit also includes extensive fractionation facilities for depentanizing and for aromatics concentration which relates to the Petrobrazi petrochemical activities.

As mentioned earlier, high pressure (3.5 MPa) steam is generated by the hot flue gases from the three reactor heaters. These heaters are refinery gas fired and claim to be operated in the region of 3 to 4 percent excess oxygen content, which is a satisfactory performance. They are not equipped for air preheating. The 3.5 MPa steam, supplemented with imported high pressure steam from the power house, drives the hydrogen recycle compressor turbine from which 0.3 MPa steam is extracted for refinery use.

Other comments related to present or future energy savings are listed below:

- The Platformer heaters, including the fractionator reboilers, are fired by refinery gas. An important energy saving system has already been implemented in the refinery for the recovery of waste flare gases. The Petrobrazi system includes gas holders with a set of three older compressors rated at 800 Nm_3/hr each and three newer compressors rated at 2000 Nm_3/hr each. This system permits the recovery of substantial amounts of otherwise totally wasted light hydrocarbon gases and the refinery staff say the system is considered very successful. In the future, it will be even more important to control these direct material losses.

- The aromatic concentration fractionator is gas fired and its costs are charged against the Platformer unit. In fact, this operation is for the preparation of petrochemical feedstocks and should not be debited against the Platformer as a normal refinery need. Unfortunately, the amount of fuel used for this fractionation was not measured so a closer estimate of the actual Platformer energy demand could be made, but it is obvious that the Platformer energy performance is considerably closer to US operations than the data in Table B.1.1 suggest.

4. FLUID CATALYTIC CRACKING UNIT I

4.1 Process Flow Diagram

The simplified process flow diagram is shown in Figure No. 4.

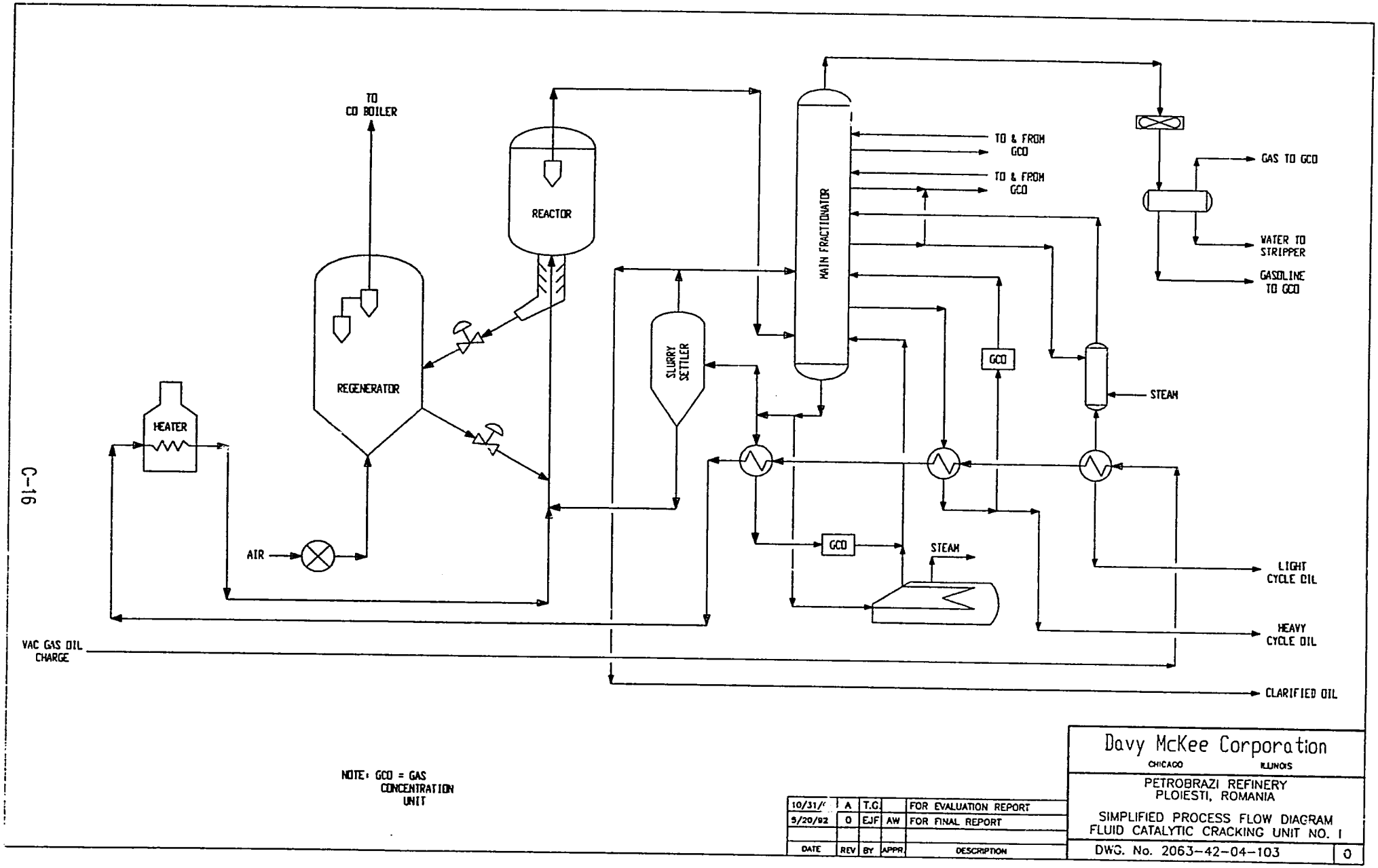

NOTE: GCO = GAS CONCENTRATION UNIT

DATE	REV	BY	APPR	DESCRIPTION
10/31/	A	T.G.		FOR EVALUATION REPORT
5/20/92	0	EJF	AW	FOR FINAL REPORT

Davy McKee Corporation
CHICAGO ILLINOIS

PETROBRAZI REFINERY
PLOIESTI, ROMANIA

SIMPLIFIED PROCESS FLOW DIAGRAM
FLUID CATALYTIC CRACKING UNIT NO. 1

DWG. No. 2063-42-04-103 | 0

FIGURE 4

4.2 Feedstock

The Petrobrazi refinery has installed a single Fluid Catalytic Cracking Unit ra at 1 100 000 tonnes per year and constructed in 1967. The design feedstoc based on a mixture of straight run vacuum distillates and up to 40 percent of li and heavy coker gas oils and heavy furfural raffinates from carbon bl feedstock production. The unit is operated at a high 75 percent conversion le with a gasoline yield in the region of 45 weight percent. Tables C.4.2.1. a C.4.2.2 shows typical feed properties and design rates.

TABLE C.4.2.1.FCC UNIT NO.1 DESIGN
BASIS TYPICAL FEEDSTOCK THROUGHPUTS

Feedstock	tonnes/year	kg/hr	wt%
Vacuum Distillate	668 592	84 418	60.22
Light Coking Gas Oil	260 804	32 930	23.49
Heavy Coking Gas Oil	180 904	22 841	16.29
TOTAL	1 110 300	140 189	100.0

The design basis is on an operating time of 8 000 hours per year. In 1990, t unit processed 984 400 tonnes at 7 111 operating hours.

TABLE C.4.2.2 FCC UNIT NO.1
DESIGN BASIS TYPICAL FEEDSTOCK PROPERTIES

Property	Mixed Feedstock	Vacuum Distillate	Coking Gas Oil	
			Light	Heavy
Vol%	100	60	24	16
Density, °API	28.6	28.1	32.0	25.7
UOP K	11.83	12.00	11.60	11.55
Sulfur, weight percent	0.22	0.2	< 0.2	< 0.3
Conradson Coke, weight percent	0.68	< 0.5	0.1	1.5
Nitrogen, weight percent	---	< 0.02	---	---
Metals, ppm	1.5	---	---	---
Distillation, °C				
5%	---	301	210	315
50%	---	396	287	354
95%	---	537	385	437

4.3 Flexibility

An FCC is inherently a flexible operation capable of handling a wide variety of feedstock options, including heavy residues under certain conditions.

In other respects, however, there are several absolute constraints on FCC operating parameters, and these include the air compressor for the regenerator coke burning and the gas compression capacity for the associated gas concentration or vapor recovery section of the unit.

4.4 Operating Sensitivity

Strict limits on the gross operating capacity of an FCC are fixed in terms of the installed capacities of the air and off-gas compressors. However, within this region, operation-wide variations in conversion, yield structures and feedstock compositions can be readily tolerated without causing special difficulties to operations.

51

4.5 Product Specifications

The main FCC fractionator operates essentially as a synthetic cracked crude distillation unit with similar methods applied for the control of product distillation ranges, flashpoints, etc. There is, however, the additional problem of controlling contamination by the small catalyst particles that accumulate in the heavier oil fractions and must be settled out and recycled. In the gas concentration section of the unit, the large quantity of olefinic light gases are merox treated for sulfur control and separated by a combination of absorption recovery and classical fractionation methods to the degree of purity that might be warranted for fuels or, more especially, for petrochemical uses. Table C.4.5. contains typical product specifications.

TABLE C.4.5 - SELECTED PRODUCT SPECIFICATIONS
FCC UNIT (TYPICAL) - 75% CONVERSION

Property	Gasoline	Light Gas Oil	Heavy Gas Oil
Gravity, °API	57	31	24
Reid Vapor Pressure, PSIG	6.0	---	---
Sulfur, weight percent	0.04	0.20	0.25
RON - unleaded	93	---	---
RON + 0.8 ml TEP/L	97.5	---	---
Pentane, vol%	20	---	---
Cetane No.	---	30	---
Bromine No. approx	---	20	25
Aromatics, vol%	---	60	45
UOP K	---	11.3	11.2
Distillation, °C			
IBP	---	204	254
50%	---	246	316
90%	179 ± 3	271	363
95%	---	282	382
EP	200	---	---
Freezing Temp., °C	---	-26	+7

4.6 Unit Yields

Typical unit yields, as reported and documented, are shown in Table C.4.6.

TABLE C.4.6. - TYPICAL FCC UNIT YIELDS

Product	Planned operation wt%	Reported in 1990 (wt%)
Hydrogen Sulfide	0.10	Fuel Gas 5.6
Hydrogen	0.11	
Methane	1.60	
Ethylene	1.09	
Ethane	1.56	
C_3	7.94	2.5
C_4	12.0	5.9
Gasoline	43.10	44.7
Light Gas Oil	19.70	19.4
Heavy Cycle Gas Oil	---	5.9
Slurry (residue)	5.60	7.5
Coke on Catalyst	7.20	7.2
Losses	---	1.3
TOTAL	100.0	100.0

4.7 Unit Modification Potential

This FCCU was commissioned in 1967. Consequently, the regenerator, particularly with its high temperature profile, has reached the point where the metallurgical soundness will be deteriorating. The unit has needed internal insulation replacement due to cracking in the regenerator and riser sections of the unit. A full program to ensure the mechanical integrity of the unit will be a priority item.

There is expressed interest to improve the overall efficiency of the FCCU by the addition of an expander to the installation. It is obvious a full rehabilitation of the facility will be necessary to justify any commitment to a high capital expenditure such as an expander system. It also seems clear than an improved financial status will be necessary before this type of project could be implemented.

4.8 Capacity Increase Potential

It is doubtful, due to the age of the unit, that concerns regarding any increase in the unit's capacity are especially relevant. In any event, the installed air compressor and gas concentration unit compressor capacities impose practical limits to the throughput capacity.

4.9 Operating Practices

Petrobrazi feeds the FCCU with hot vacuum gas oils, which is a commendable practice.

Critical to the modern operations of fluid cat crackers is the energy recovery made possible by the addition of the CO boiler to the regenerator off gas stream. This enables, not only the recovery of sensible heat in the off gas stream, but also the heat of combustion of the relatively high carbon monoxide content in these gases.

However, based upon our interpretation of the utilities consumption data furnished, the FCC unit performance in net energy requirement terms is some 75 percent worse than might be expected in the typical US refinery. The identical technology is being practiced and therefore some of the difference must be attributed to the 40 percent higher coke burning rate at Petrobrazi that is not compensated by increased steam generation capacity as compared with selected US practice. A comprehensive energy audit is to be encouraged.

The major possibility for future energy recovery is the addition of an expander to the installation, which is already under review by the refinery staff and UOP (subsequent correspondence with UOP indicates that this is not a viable option). However, as this project will be capital intensive, it is certain the implementation of the program will be delayed or proceed slowly. At the same time, the unit has suffered some metallurgical problems in the regenerator and riser sections of the plant requiring the repair of cracks and internal insulation replacement. Ensuring the mechanical integrity of the unit will be a priority item.

A light cracker oil stream is used as an absorber sponge oil in the vapor recovery section and undergoes a 1.5 MPa pressure drop at a recirculation rate of some 30 tonnes per hour. The potential for the recovery of useful hydraulic power should be a worthwhile investigation.

The cycle oil stream temperature level is sufficiently high for a further increase in steam generation from the unit. The practicalities for recovering this waste heat should be considered. For example, more suitable sink could be the district heating system. Therefore, the scheduled project start-up directly impacts the decision of how to best use this energy source.

A Ljungstrom air preheater has been used successfully for some 20 years in operation with sweet local crudes. However, after the recent introduction and operations with sour Mid Eastern crudes, the sulfur content of the fuel oil rose sharply causing excessive corrosion of the Ljungstrom unit which has now subsequently failed. This entails a considerable loss in wasted energy so it is important to establish the design and fabrication/materials of construction parameters that will permit the continued and successful operation of the unit for heat recovery.

The unit's insulation is of a local glass wool/asbestos clay wrapped fabrication and is severely worn in certain areas. An improved preformed glass wool/urethane material with a metal covering is now available and should be introduced promptly as repairs become necessary. The fire resistance of this material has been verified.

5. PLANT LIMITATIONS

5.1 Unit Capacities

The Romanian refineries are currently operating at reduced rates approximating 55 percent of design capacity on an annual basis. However, unit operations are generally scheduled for hourly throughput rates on the order of 70 to 90 percent of design with periodic extended shutdown periods until feedstock supplies are replenished. The inefficiencies and product losses associated with frequent start-up and shutdown also contribute to overall energy loss.

5.2 Product Requirements

Reduction in the amount of petrochemical feedstocks produced by the refinery would significantly increase the availability of the reformate aromatics fractions to the gasoline pool. Consequently, it appears that the reformer severity could be decreased while maintaining the expanded gasoline pool octane level. It will also be likely that more of the cracked gases, propylene, and butylene would be available for LPG production.

Should demand decrease for the refinery fuel products, it would appear unlikely that the facility could continue to supply the same tonnage of petrochemical feedstocks. It seems the appropriate solution in this scenario would be the import of the deficient naphtha or reformate from a neighboring refinery to maintain the necessary level of feedstock to the aromatics extraction unit. Similar imports would be required for any deficient olefines to maintain the necessary petrochemical supplies.

5.3 Fuel System

As supplies of natural gas dwindle, arrangements will have to be made for imported supplies and/or conversion of burners to accommodate heavy fuel oil firing.

5.4 Steam System

With the adjacent National Power Station, there would appear to be no concern for limitations in steam supply.

5.5 Electric Power System

As for steam supplies, there should be no restriction in the power supplied with the national power station adjacent to the refinery. The only possible problem appears to be potential outages due to failures caused by corrosion of the underground cabling. Otherwise, the refinery has been free of power outages for the past two years.

5.6 Tankage

It was acknowledged that an unknown amount of leakage is occurring in tankage but it is not clear how this problem is being addressed. It was stated that certain underground recovery wells have been installed, but no measure of effectiveness or the steps taken for the repair or replacement of affected tanks were given. The reported 154 500 cubic meters crude tankage storage capacity at the design rate of 7.5 million tonnes per year yields a 6.5-day crude oil feedstock supply.

5.7 Other Limitations

A major problem is the poor or worn-out state of rotating equipment and the lack of spares for proper maintenance. This problem also seems to extend to obsolete instrumentation for which spare parts are unavailable. In this regard, the solution is dependent on financial, not technical limitations.

D. HEAT CONSERVATION

1. HEAT TRANSFER PRACTICE

The Atmospheric/Vacuum Distillation Unit 100, Platforming Unit 130, and Fluid Catalytic Cracking Unit I received a detailed review of operating conditions in Section C. The documented energy demands for these units, compared with typical US requirement are shown in Table D.1.

TABLE D.1. - UNIT ENERGY USE COMPARISONS

Unit	Petrobrazi Specific Energy Demand (kcal/mt)	Petrobrazi/US (%)	US Specific Energy Demand (kcal/mt)
Atmospheric/Vacuum Distillation	292 857	1.195	245 000
Platformer	1 140 601	1.201	950 000
FCC + Gas Con.	1 021 116	1.761	580 000

These selected results together comprise over 80 percent of total refining energy demand. The FCC unit, in particular, appears to suffer from a high fuel requirement that is not compensated by an adequate steam generating capacity. However, it must be pointed out that each of these units is penalized in energy consumption to a certain extent by elements not normally associated with their operations, such as depentanizing in the crude/vacuum unit, BTX concentration in the Platforming Unit and butane/butylene splitting in the FCC Unit. Both of these latter operations should, more fairly, be debited to petrochemicals productions.

2. UNIT HEAT BALANCES

2.1 Crude Unit

The Atmospheric/Vacuum Distillation Unit heat recovery arrangement has a considerable amount of medium 1.5 MPa and low 0.5 MPa steam generation installed in lieu of maximizing heat transfer to the incoming crude feed stream. A portion of the atmospheric tower lower pump-around duty is utilized to reboil the depentanizing column. As a consequence, the crude preheat temperature entering the crude heater from the preflash tower is a surprisingly low 180°C.

A rigorous "Pinch" analysis would help determine if a more optimal heat recovery train could be devised for the transfer of the higher level heat streams. It is recommended that this study be combined with simulation of the distillation towers to evolve an overall improved mode of operations that would maintain product qualities but minimize specific energy needs.

2.2 Platformer

The operation of the aromatics concentration column to prepare feedstocks for BTX extraction obviously detracts from the energy efficiency this unit could obtain if only a full-range reformate product for gasoline blending were produced. This energy penalty is accentuated as additional imported reformate from other refineries is also being processed.

2.3 Fluid Catalytic Cracker

A portion of the observed energy inefficiency of the FCC unit must be attributed to the age of the equipment and the deficiency of spare parts, particularly for rotating equipment. Metallurgical and pump failures lead to emergency shutdowns and unexpected losses that will be difficult to control until that equipment can be upgraded to accepted modern standards.

The energy consumption of the butane/butylene splitter can be attributed to petrochemical feedstock production rather than refinery operations. However, a linear program model of the operations could be used to determine the transfer prices of all the intermediate streams.

3. HEAT TRANSFER EQUIPMENT ANALYSIS

3.1 Fired Heaters

The refinery has about 65 heaters. Most heaters have a capacity of over 12 Gcal/hr and are not equipped to achieve high energy efficiency.

Oxygen analyzers were installed on the old crude refinery heaters, but have been inoperative for years. All heaters in the new crude refinery have oxygen analyzers that are used for indication only. Although these analyzers are in working condition, they are not based on zirconium oxide-sensors and require a high level of maintenance.

The new crude refinery unit oxygen analyzers are calibrated annually in compliance with Romanian regulations. However, to ensure an adequate level of accuracy and to eliminate drift, the instruments should be calibrated much more often. Further, these analyzers were manufactured in East Germany, and production is likely to be discontinued in the general restructuring of the GDR.

There is a great potential for improving the energy efficiency of the process heaters by implementing modern control instrumentation and modern control strategy. However, this should be done only if the heaters are modernized mechanically and equipped with additional instruments such as draft transmitters, combustion temperature transmitters, air and fuel flow transmitters, and other instruments. Currently, the fired heaters do not have automatically or remotely operated dampers for combustion controls. Also, burners on all of the heaters, with the exception of the CO-boiler, are obsolete and are not equipped with flame detectors. Therefore, it is impossible to implement modern combustion control strategies on the heaters in their present condition.

3.2 Heat Exchanger Trains

The refinery is not dissatisfied with heat exchanger performance. However, in new design applications, heat transfer rates can be improved by modifying the characteristics of individual exchangers with respect to fluid velocities, baffle pitch, baffle cut, and other design factors. A more fundamental analysis of heat exchanger train arrangements using computer analysis, optimizing design programs such as HTRI and incorporating heat exchanger design considerations would be fruitful.

The heat exchanger train operation monitoring is not adequate. Most heat exchangers have only local bi-metal thermometers installed, and the temperature is often measured only at two points. Monitoring of the temperature (and pressure) in four points would give a better indication of each exchanger's operation. Only some of the heat exchangers have thermocouple temperature elements for remote temperature readout in the related control room. There is no special instrumentation installed that would decrease energy use by optimizing a heat exchanger train's control.

The atmospheric and vacuum distillation systems have the original control systems and have not been revised to improve energy efficiency.

3.3 Waste Heat Recovery

In general, the refinery uses heat recovery from hot product streams through the use of product to feed exchangers. In addition, extensive efforts are evident in recovering heat by steam generation before rejection to air or water coolers.

3.4 Economics of Increasing Surface Areas

An increase in Crude Unit 100 heat exchanger efficiency, through an increase in heat exchanger surface area or improved insulation, reduces operating costs. At $62 per tonne of fuel oil (the internal refinery price in May 1991) and 80 percent fired-heater efficiency, a one degree centigrade improvement is worth $17 845 per year. The savings potential based on the overall refinery design rate of 7.5 million tonnes per year is worth $38 200 per year per degree centigrade. See Appendix D for evaluation basis.

4. STEAM SYSTEM

4.1 Steam Balance and Utilization

Steam is generated primarily for three applications:

- process steam in the crude unit
- steam for driving turbine compressors and FCC blowers
- process heat

The Petrobrazi refinery receives its power and net steam plus condensate and boiler feed water supplies from the adjacent thermal power station. This station supplies the steam through two thermal substations, one for the old refinery and the other for the new units of the recent expansion.

The steam supply is, of course, supplemented by waste heat boilers and process steam generated by energy recovery systems throughout the refinery. Tables D.4.1.1 and D.4.1.2. summarize the waste heat boiler steam generation system.

TABLE D.4.1.1 - NEW REFINERY WASTE HEAT RECOVERY STEAM GENERATION

Unit	Heat Source	Steam Produced	
		tonnes/ hour	MPa
Diesel Hydrotreater #2	finished product (hydrotreated gasoil, stripper bottoms	7	0.4
Diesel Hydrotreater #2	heater flue gases	15	1.4
Catalytic Reforming	heater flue gases	20	3.5
Naphtha Hydrotreater	heater flue gases	3	0.4
Amine Treating and Sulfur Recovery	heater flue gases	7	0.4
Coking	---	10	0.4

TABLE D.4.1.2. - WASTE HEAT RECOVERY STEAM GENERATION

Pressure Level	0.4 MPa	1.4 MPa	3.5 MPa
Production Rate	27 tonnes/hour	15 tonnes/hour	20 tonnes/hour

4.2 Selection of Pressure Levels

Steam is utilized at three nominal pressure levels of 0.4, 1.5, and 3.5 MPa, although pressures appeared to vary throughout the refinery by as much as 0.2 MPa. Table D.4.2. provides data on the steam supply systems.

TABLE D.4.2. - STEAM PRESSURE/TEMPERATURE SPECIFICATIONS

	Pressure, MPa			Temperature, °C		
	min.	nor.	max.	min.	nor.	max.
Low Pressure	0.4	0.5	0.6	180	200	220
Medium Pressure	1.3	1.4	1.5	260	280	300
High Pressure	3.1	3.3	3.5	320	340	360

4.3 Condensate System

There are five condensate collecting and pumping systems within the Petrobrazi refinery. A summary of the system characteristics follows:

System No. CR-1
Condensate from the 3.5 and 1.3 MPa steam systems is collected and expanded to generate 0.4 MPa steam. The condensate from the collection vessel is used as feedwater to the 0.4 MPa waste heat boilers.

System No. XPE-1
Condensate from the 3.5 MPa steam system is flashed to generate 1.3 MPa steam. Condensate from this operation (3.5 MPa condensate vessel) is commingled with 0.4 MPa condensate and yields 0.4 MPa steam. Approximately 80 cubic meters per hour of low pressure condensate is pumped to the Petrobrazi thermal power station at a pressure of 1.2 MPa.

System XPE-2

The 1.3 MPa steam is generated from expanding 3.5 MPa condensate. Condensate from the collection vessel producing the 1.3 MPa steam is used to generate 0.4 MPa steam, as in System XPE-1.

System CR-2
Condensate Station No. 1 handles clear condensate. High and medium pressure condensate is sent to the vessel generating 0.4 MPa steam. Low pressure condensate is handled in this system. Low pressure saturated steam is directed to the refrigeration unit or discharged to the atmosphere. Condensate sent to the power station from the vessels is pumped at 100 cubic meters per hour at 0.87 MPa and 10 cubic meters per hour at 1.0 MPa.

Contaminated System (Station No.3)
This system exists to handle condensate contaminated with hydrocarbons. If contamination exceeds 80 mg/l of hydrocarbon, it is discharged to the sewer. Condensate with a maximum contamination level of 10 mg/l is sent to the water treatment station where it is clarified (carbon filters) and returned to the thermal power station.

It was reported that the clear condensate return to the power house was approximately 40 percent.

4.4 Insulation

Insulation is applied to the Romanian norm of a maximum of 60°C surface temperature. However, it was noted that a certain amount of insulation deterioration had occurred in some locations and should be replaced. Significant heat losses can be avoided by improving the selection and maintenance of valves and steam traps.

4.5 Potential Effect of Energy Savings Projects to Steam Balance

The refinery is supplied by the Petrobrazi Thermal Power Station. Therefore, energy savings projects should not have an adverse effect on the steam balance.

5. HEAT REJECTION SYSTEMS

5.1 Cooling Water System

The Petrobrazi refinery employs a combination of air and water trim cooling services for the plant. The circulating cooling water system employs natural draft hyperbolic cooling towers and induced draft cooling towers. Certain problems were evident as oil contamination and leakage impaired the efficiency of the cooling tower/water system due to excessive algae growth and fouling and necessitated periodic high pressure water cleaning of the exchangers. Refer to Section B.5. for additional information.

5.2 Air Coolers

Most air fans were fitted with a Romanian auto variable fan pitch mechanism, but it was reported that these failed to work properly so the fan pitch is fixed manually. Fans are turned off when weather conditions and cooling performance permit. See Section B.5. for additional information.

5.3 Equipment, Piping, and Steam Heat Losses

See Sections C and F for information about the mechanical operation of specific units. In general terms, the insulation thickness appears appropriate for thermal containment at the temperature levels protected.

5.4 Recovery Systems

See Sections C, D, and F for information about the operation of specific units.

5.5 Tracing and Temperature Maintenance Systems

No serious problems with temperature maintenance in the process plant were reported by refinery personnel.

6. USE OF HOT OIL LOOPS

No dedicated hot oil loops were reported in the Petrobrazi refinery operations possibly due to the wide plot spacing and also the lack of suitable services.

The balance of advantages and disadvantages must be considered when a loop with circulating hot oil is to be provided as a heat source to several users. There is an advantage to operating one furnace instead of several. The furnace serving as the heat source can be designed for high efficiency and low nitrogen oxide emissions. On the other hand, heat losses could be high in the oil circulating loop if there are long pipe runs for widely scattered users, and there can be a loss of flexibility of operation. A similar balance of advantages and disadvantages also applies to the steam system used to recover heat from the flue gas.

E. MECHANICAL DRIVE SYSTEMS

1. COMPRESSOR DRIVES

1.1 Delayed Coking Unit

Reciprocating compressor

The six-cylinder horizontally opposed gas compressor in the coking unit is driven by an electric motor and gear box combination.

Centrifugal compressor

An Ingersol Rand centrifugal compressor in the coking unit is driven by a Terry single stage steam turbine.

1.2 Plant Air System

Three compressors supply compressed air for the entire Petrobrazi refinery. Two compressors are on stream with one on standby. An electric motor drives each compressor. These motors typically operate at 38 AMP, 380 V, 3 phase, and 50 Hz.

1.3 Fluid Catalytic Cracking Unit

The regeneration air compressor is steam turbine driven.

1.4 Catalytic Reformer Unit

The hydrogen compressors are reciprocating compressors (121 K1, 121 K2, 123 K1) and are electric motor driven. A typical operation is illustrated by 121 K1 as observed on 20 July 1991:

Motor Volts:	6000, 3 phase, 50 Hz
Motor Amps:	26
Motor Power Factor:	0.75
Motor Manufacturer:	Garbe Lahmyer, Germany

Centrifugal compressor, tag K1-130, is a turbine driven, six-stage unit.

2. SPECIAL PUMPS

All pumps in the refinery are electric driven with the exception of one in the F Unit which is a steam turbine drive (FP2). Many pumps operate at reduced fl The energy used at this reduced flow rate is almost the same as at normal ra See Section J for recommendation for use of variable speed drives for be efficiency matching of the driver to the pump's energy needs.

3. ELECTRIC MOTORS

The electric motors in the refinery originated from various European sources, i Germany, Austria, Russia as well as Romania. The maintenance repair sho capable of re-manufacturing any motor in the refinery. However, due t shortage in the copper supply, some motors have been refitted with less than customary amount of copper windings, resulting in elevated-temperat operation at rated loads.

4. STEAM TURBINES

All steam turbine drivers are balanced and assembled by the maintenance re shops.

5. SPECIAL EQUIPMENT

Steam ejectors are used in vacuum tower service. No data were obtai regarding operation of these units. Consideration should be given to switchin vacuum pumps.

F. MAINTENANCE/MECHANICAL OBSERVATION

1. OVERALL IMPRESSIONS

The maintenance and mechanical engineering department at Petrobrazi is organized into the following working groups:

Unit area

Each process unit area has an assigned mechanical engineer who is responsible for the maintenance and housekeeping for the entire unit. Also, a number of technicians are assigned and report to the area engineer for work scheduling. The area engineer plans the repair and maintenance for scheduled shut-downs or turnarounds. Spare parts are ordered from the refinery's supply. If the part is not available, it may be purchased or manufactured by other departments or perhaps a new part may be designed and manufactured. The initial demand for items and/or repair or replacement is made by the area engineer.

Stationary equipment

The maintenance shops are equipped to manufacture or repair stationary equipment, such as tanks, pressure vessels, valves, pipes, and heat exchangers. The engineering department is capable of designing new stationary equipment or modifying existing equipment. The maintenance shops for stationary equipment work from drawings furnished by the engineering department.

Safety relief valves are disassembled, reconditioned, reassembled, and tested in a separate branch of the stationary equipment division. Each employee in this shop is certified by the Romanian code enforcement authority.

Dynamic equipment

The maintenance shops are also equipped to manufacture spare parts for dynamic equipment, such as pumps, compressors, gear boxes, fans, and blowers. The machine tools in the shop are adequate for refabricating any rotating machinery in the refinery. High speed pumps and compressor impeller shafts are balanced in a special balancing shop.

Materials and spares

The maintenance department operates a warehouse for required materials and spare parts. Expendable supplies are also the responsibility of the division.

The organization, management, and personnel of the Maintenance and Mechanical Engineering Department is efficient and effective. However, the refinery's performance is below expectations due to:

- Lack of Spare Parts

  Before December 1989, no materials or spare parts were imported. All the spare parts required for the refinery were locally manufactured from Romanian raw stocks.

- Inadequate Quality in Materials

  Due to the importation ban, some available materials supplied to the refinery were of a poorer quality than those required. For example, the engineering staff attempted to design its own pump seals to western standards. Due to the inferior quality of seal materials manufactured by some Romanian companies, the resultant seals lasted about one month. Because of the short supply of alloy materials, such as chromium and molybdenum, the low alloy steel available proved inferior. This resulted in dynamic equipment shaft failures. In some cases the bearings had a short life.

- Unscheduled Maintenance

  Due to the frequent failure rate of dynamic equipment, the refinery is frequently shut down for unscheduled maintenance. It has been difficult to adhere to planned turn-around maintenance schedules in some cases due to unpredicted equipment failure.

The housekeeping in some parts of the refinery is below standard. There are pieces of equipment in disrepair, such as heat exchanger bundles, valves, electric motors, and pipes disconnected and scattered in all the units. There is no inventory or cataloging of this equipment. Weeds and grass are allowed to grow within the process units, which presents a fire hazard when hot weather renders this material combustible. The insulation and steam traced lines exhibit maintenance neglect. All units need painting. Personnel areas are reasonably clean.

2. UNIT REVIEW

The refinery complex at Petrobrazi, Ploiesti, Romania was inspected for applications of energy and environment conservation. The following units were inspected:

Maintenance and Repair Facilities
Cooling Water Treatment Facilities
Refinery Compressed Air Facilities
Crude Distillation Unit #1
Crude Distillation Unit #2
FCC Unit #2
Coking Unit #3
Catalytic Reformer #2

Comments and observations relating to mechanical equipment in these units is presented in the following sections.

3. EQUIPMENT CONDITION SUMMARY

3.1 Fired Heaters and Boilers

The process heaters at Petrobrazi are fired with natural or refinery gas. The air/fuel ratio is manually set by visual flame color. There is no air preheat. (See Section D.3.1. for additional data.) Fuel gas flow measurement was not available.

An example of a typical heater operation is illustrated in Table F.3.1.1. below.

TABLE F.3.1.1 - ATMOSPHERE DISTILLATION TOWER HEATER F-1
Typical operation on 17 July 1991

Crude Flow Rate	190 m^3/h
Crude Temperature In	178 °C
Crude Temperature Out	323 °C
Steam Flow Generated	6 tonnes/h
Steam Pressure	0.3 MPa at 400 °C
Flue Gas Temp Out	362 °C

3.2 Heat Exchangers

Shell and tube

Since the restriction on the importation of steel tubes, the heat exchangers in the refinery have been retubed with available Romanian-manufactured tubes, which exhibit less than desirable corrosion resistance. For example, the S-5 exchanger, Crude Unit #2, had the tube bundle partially removed from the shell. The unit was shut down for vessel repair. The outside tubes showed salt deposit fouling. Approximately 25 percent of the tubes were plugged, and the tubes exhibited corrosion from outside. Two possible remedies are:

- Retube the exchanger using alloy tube of corrosion resistant, chloride resistant materials
- Operate the desalter with more injection water to remove residual salt

The second remedy must be part of a cost/benefit analysis that considers the cost additional heat energy use the would result with the increased use of desalter water.

Heat exchanger bundles are cleaned with light cycle oil and soaked for three days. The tubes are swabbed by lance and rotating head cleaners.

Air fin

The FCC #2 unit uses fan cooled gasoline condensers. Table F.3.2.1 illustrates a typical configuration. The unit was not operating during the DMC team visit on 18 July 1991.

TABLE 3.2.1 - FCC #2 GASOLINE CONDENSER
TYPICAL OPERATION

Temperature In	130°C
Temperature Out	50°C or less
Flow Rate	3.5 million tonnes/yr
Blade Pitch	Manually Adjust
Rated Motor Power	55 kW
Belt Drive	3 Belts
Number of Fans	8
Louver Adjustment	Manual

Cooling towers

The primary design of cooling towers are natural draft hyperbolic towers. The force craft cooling towers are used for high ambient temperature days. The motors are reversible for winter operation. The natural draft towers have closure doors for winter operation.

The cooling tower packing is asbestos corrugated sheet, which is inadequately fragile. The cooling water is turbid with hydrocarbon.

3.3 Vessels

Storage tanks

The storage tanks at Petrobrazi are typically of cone roof welded design. Some tanks exhibit riveted original constructions with welded repair. Tank venting and breathing is directed to the atmosphere. No vapor recovery systems are in place. Although some of the storage tanks use floating roof design, gasoline cuts were stored in cone roof tanks which allow much higher evaporation losses.

Pressure vessels

Since the restriction of imported vessel steel and welding filler metal the quality of locally available materials has suffered. This has caused several installations of low alloy vessels in the refinery to be suspect. Repairs of low alloy vessels also are likely to exhibit poor quality.

The integrity of most of the refinery's pressure containments was adequate, except for the reactor vessel on FCC #2 unit. A crack in the vessel opened to the atmosphere on 15 July 1991. The Mechanical Engineering Department was involved in the repair of this alloy vessel.

3.4 Rotary Equipment

Since the restriction of imported goods, the quality of all rotary equipment has deteriorated. Examples of this deterioration are described in Sections C.3.4.1 and C.3.4.2 on pumps and compressors.

3.4.1 Pumps

The pumps in the Petrobrazi refinery are of several sources: however, most were domestically manufactured. The Maintenance Engineering Department has designed seals and modified seal chambers to fit the seals of their own design. Due to poor quality of materials available, the seals' life is not as long as desired.

Some pumps do not exhibit the desired durability. For example, in the span of one week there were three pump failures of a Romanian proto-type high pressure water pump used to cut the coke from the coke drum. The failures ranged from a broken shaft to bad thrust bearings. A replacement pump from Vogel Stocken, Austria is available. On other coker units, the Vogel pump operates satisfactorily without unscheduled maintenance.

The cyclone separators in the FCC Reactor Vessel are not as efficient as desired. As a result, catalyst is pumped through the FP-2 pump. This pump is an American design by United. The catalyst is abrasive and the volute casting is quickly eroding. As a result the maintenance and repair shop refurbishes this pump regularly by overlay welding the internal surface of the volute and grinding the contour.

Typical pump operation is shown in Table F.3.4.1.

TABLE F.3.4.1 - CRUDE UNIT #1 TYPICAL PUMP OPERATION
(18 July 1991)

Pump Tag #	Suction Pressure (KPa)	Discharge Pressure (MPa)	Flow Rate m^3/Hr	Temp °C	SP.GR	Motor Volts	Motor Amps	Approx Efficiency
P-1	50	1.4	200	21	0.884	6000	16	49.27
P-2	450	2.5	370	50	0.850	6000	35	60.76
P-5	20	0.6	110	270	0.84	380	180	17.25

NOTE: The efficiency of P-5 and P-1 is low due to reduced flow.

3.4.2 Compressors

Refinery utility air

The present utility air supply was commissioned with the 1988 addition of Crude Unit #2. It has adequate capacity for the whole refinery. The compressors are from England, with two on line and one spare. The system operates at 350 KPa pressure. The instrument air is dehydrated with electrically regenerated silica-gel dryers.

The compressors have teflon piston rings with graphite impregnation. The replacement rings available are of lesser quality than the original rings. The replacements last approximately one week. Consequently, the spare compressor unit is disassembled frequently and repaired. Therefore a spare is mostly not available for emergency on-stream usage.

The obsolete utility air unit was intended to be dismantled but must be kept running for ernergency purposes. This unit is used for the utility and air supply to the maintenance and repair shops.

Table F.3.4.2 illustrates the typical operation of the utility air compressors.

TABLE F.3.4.2 - REFINERY UTILITY AIR COMPRESSOR TYPICAL OPERATION
(20 July 1991)

First Stage Suction Temperature (Ambient)	23°C
First Stage Discharge Temperature	150°C
Second Stage Suction Temperature	50°C
Second Stage Discharge Temperature	126°C
Plant Air Header Temperature	60°C
Plant Air Header Pressure	350 KPa
Air Flow Rate, one compressor	2500 Nm^3/h
Motor Voltage	380 VAC
Motor Current	38 amps

None of the utility air compressors have vibration high limit switches. Adding high limit switches is recommended.

Hydrogen compressors

Turbine drive compressor K1-130 is a 6-stage centrifugal machine with a Woodward speed control and vibration monitors on the drive turbine and compressor. Electric motor driven compressors, such as 121 K1 and 121 K2, do not have vibration monitors. Vibration monitors are recommended. Typical operation of the hydrogen compressor is illustrated in the Table F.3.4.3.

TABLE F.3.4.3 - PETROBRAZI REFINERY REFORMER UNIT
(20 July 1991)
Typical operation of 121 K1 Hydrogen Compressor

Flow Rate	14 100 Nm^3/h
First Stage Bore	160 mm
First Stage Stroke	230 mm
Nominal Operating Pressure	4.4 MPa
Test Pressure	6.6 MPa
First Stage Inlet Pressure	2.15 MPa
Second Stage Out Pressure	3.8 MPa
First Stage Suction Temperature	45°C
First Stage Out Temperature	80°C
Second Stage Out Temperature	80°C
Motor Voltage	6000 VAC
Motor Current	25 amps
Motor Power Factor	0.75

The reliability and safety of operation could be significantly improved if rotating equipment such as utility air compressors, hydrogen compressors (in particular units #121 K1, 121 K2, and steam drive unit #K1-130) were equipped with temperature and vibration monitors, alarms, and interlocking.

3.5 Steam System

Steam traps were a constant problem with high failure rates. Leaking steam was observed in all units. Attention to this problems can provide significant savings though energy reduction.

3.6 Piping and Valves

The valves used in the steam system exhibited poor quality bonnet and stem seals. The piping was adequately supported, showed no vibration, and allowed for adequate expansion.

The insulation was less than good quality. The jacketing was galvanized sheet steel, which exhibited rust deterioration. All pipe and insulation cover and supports showed a neglect of painting. Insulation was removed from valves, pumps, compressors, and was not replaced.

3.7 Instrumentation

The refinery instrumentation information was collected between 15 and 20 July 1991. Most of the information was obtained from the Director of the Electrical and Instrumentation Department, the Chief Instrumentation Engineer, and the Chief of Instrumentation Maintenance.

The Petrobrazi refinery is mainly equipped with domestically produced control valves manufactured on a license agreement with Goulde (West Germany). Also, especially in the original refinery, Masoneilan, Honeywell, and USSR made valves are used. Most of the valves were found to be in working condition, although some valves had developed leaks at the flanged connections. Valves are repaired in the refinery shops. However, it is not certain whether the accuracy of repair of the valve plugs and seats is adequate to retain valve characteristics and tight shutoff when necessary. Generally, with the present technology, the control valves are not a major factor in improving efficiency and reducing pollution.

General

The refinery instrumentation is mostly explosion proof. However, in the locations roughly equivalent to area Class I, Division 1, Group B (hydrogen could be present) intrinsically safe instruments are used. Intrinsically safe field instruments are color coded (blue).

The instrumentation in the original refinery is mostly imported and varies from unit to unit depending on the date and place of design. The instrumentation in the newer refinery, with the exception of specialty instruments, is exclusively Romanian.

The instrumentation in the original refinery should be replaced as soon as possible. Many instruments on this line are very old and spare parts are no longer available, even from the original equipment manufacturers. Instruments on one or more units are cannibalized as a source of spare parts for other units. The refinery does not believe that retrofitting the original refinery units with Romanian instrumentation (especially panel mounted instrumentation) is the right and economical solution to the problem. The ideal solution is to install a distributed control system so advance control schemes could be implemented.

The refinery claims the newer refinery instrumentation is adequate and that it could continue its operation with its existing instrumentation. Most process units have electronic field and panel mounted instrumentation. Some units are still controlled with pneumatic instruments. The pneumatic instruments were made in Romania. The quality and reliability of these pneumatics instruments is below modern standards.

Calibration and maintenance

According to Romanian Government regulations, the following schedule for instrument calibration is followed:

Thermocouples and RTDs	once every two years
Field transmitter P, dP, and flow	once a year
Level transmitters	once every two years
Controllers	once every two years
Recorders	once a year
Conductivity and pH analyzers	once a year
Orifice plates (dimensional check)	once every two years
Oxygen analyzers	once a year

The instrument calibration is done more often, when required.

The claimed accuracy of the transmitters is ± 0.5 percent, the accuracy of the orifice plates is ± 1.0 percent, and the accuracy of the control loop is ± 1.5 percent. The refinery does not have an adequate number of highly skilled workers to provide for high quality maintenance, especially preventive maintenance. The instrument calibration facility should be provided with new calibrating instruments.

Many transmitters are mounted in fiberglass enclosures. Often the covers of these enclosures are missing. In winter this would reduce effectiveness of heat tracing and might lead to faulty operation of the instruments.

Control rooms and panel instrumentation

Control rooms are spacious. The panels in most control rooms are full graphic panels. The refinery does not have Distributed Control Systems, PLCs, automatic data acquisition and logging. Data logging is manual and is based on reading from panel instruments, which at times is imperfect. General control instrumentation, indicators, recorders, pneumatic controllers, and electronics controllers were made in Romania. There was evidence of problems with the paper and ink on the recording instruments.

Most control rooms have windows overlooking the related units. The glass window panes are not shatter-proof. Many control rooms are located in areas that would be classified as Class I, Division 2 (hazardous under abnormal operating conditions) in the U.S. The control rooms in the original refinery have been designed as pressurized and air conditioned. At present, none of the control rooms has its air conditioning operating and only some of the rooms have operating ventilation. Control rooms in the new refinery were designed without air conditioning. During the summer months, the temperature in the control rooms reaches over 30°C, affecting the performance of operators and instruments. The current standard practice is to keep all the doors of the control rooms wide open, disregarding the possible explosion hazard and safety rules that have been established worldwide.

Two serious problems are related to uninterruptible power supplies for electronic instrumentation. The first problem is caused by instability of frequency in the national power grid in Romania. The frequency drifts between a nominal frequency of 50 Hz and 48 Hz. The refinery is working on a plan to improve the frequency problem. The power supplies in the control rooms still use ferro-resonant transformers which are quite sensitive to changes in frequency. Also these power supplies have capacitors, some of which need to be replaced. However, suitable capacitors are not available in Romania.

A second concern is with the emergency power supply batteries. The batteries no longer will hold a charge and need to be replaced in several control rooms. The maintenance in the battery rooms should be improved.

Flow measurements

The refinery measurements are made by use of orifice plates and dP transmitters. The flow signals are recorded mostly on square root strip charts. Although there are square root extractors in some loops and some loops have integrating counters, it is still quite common to totalize the flows by using flow strip chart recording and graphically integrating the recorded trace by means of a planimeter.

Usually, no compensation for the temperature of the stream is used in the flow loops. Flow measurements and totalized quantities are not adequate for making accurate mass and energy balances. This significantly reduces the accuracy and value of the analysis of losses and other inefficiencies.

The refinery has some positive displacement meters which are installed mainly on finished product lines such as gasoline and LPG. Also, there are turbine meters on both paraxylene units. However, to analyze losses and the efficiency of operation of each platform (several process units combined in a single functional complex) to improve accountability and ensure efficient optimization, more high accuracy flow (mass flow) measuring and totalizing instruments are required. Precision flow measuring instruments need to be supported with adequate maintenance and calibration.

Weigh stations

The refinery has weigh stations for railway tank cars and for trucks. There are two systems for the tank cars: one is mechanical and the other is electronic. The electronic system is manufactured by Phillips and has an accuracy of ± 20 kG at 60 000 kG.

Plans for the future

The Instrumentation Department has developed a preliminary modernization plan. There are several extraneous factors, including insufficient hard currency funding, that have precluded implementation of the plan. However, it is suggested that the following steps be analyzed:

- instrumentation upgrading
- installation distributed control system (DCS)
- control room improvements
- development and implementation of advanced control strategies
- development and implementation of information systems' applications (database, process simulation, linear programming, instrument inventory and maintenance scheduling)
- accurate measurements of process stream flows and energy consumption by each unit and computerized mass and energy balances
- office computerization

Further information on instrumentation is included in Appendix F, including comments on advance control systems.

3.8 Electrical Equipment

Original refinery

The power supply to the Petrobrazi refinery is from the national grid. The power station is owned by the Romanian Department of Energy and is located about 1.4 kilometers from the refinery's 35 kV main power substation. Three underground 35 kV cable feeders supply power to the 35 kV substations. The size, quantity, and manufacturer of cables are:

Feeder	Size	Quantity	Source
A	3 x 150 mm^2, copper	2	USSR
B	3 x 185 mm^2, copper	2	Italy
C	3 x 177 mm^2, copper	2	USA

The three 35 kV substations are interconnected; thus, each feeder can be used to feed any one of four transformers. The four 35 kV transformers are Romanian and oil filled (no PCB). The transformer data is:

T1, T2, and T3	20 MVA, 35/6kV, without cooling fans
T4	25 MVA, 35/6kV, with cooling fans

At normal full operation of refinery T1, T3, and T4 are in use and operating at 50 percent of their load. Transformer T2 is a hot spare. Energy meters at the 35 kV level for active and reactive power are located at the national power stations.

New refinery

Two underground 110 kV cables from the power station owned by the Romanian Ministry of Energy supply power to the refinery. Each feeder feeds one of two 110/6.3 kV, 40 MVA transformers. The 110 kV feeders at the refinery are directly connected to the primary winding of the transformer. The only protection on the primary side are lightning arresters.

Reliability and stability of the electrical system

The electrical system at Petrobrazi is fairly stable and reliable. There has not been a power outage in the last two years. Due to a very contaminated soil, the 35 kV underground feeder cables have frequently failed and are now heavily spliced. The oil is domestically supplied, although it is expensive. Lack of a splicing kit for the 35 kV and 6 kV cables and a good quality insulating tape represent additional maintenance problems.

The monitoring of electric energy in both refineries is made by a PC computer: general refinery input and distribution (outputs) to the units.

Grounding system

A central grid grounding system with an actual resistance less than one ohm is checked every six months. The Romanian National Code requirement is less than four ohms. The lightning protection is well maintained. No corroded grounding cables or connections were observed.

Power factor

Currently, there are no capacitor banks at any voltage level in the refinery. Twice a year, the power factor is measured and the latest reading was 0.91.

Power distribution and feeders

Power at the 6 kV level is distributed between the two main substations (110/6 kV and 35/6 kV) and the unit substations by two feeders except for catalyst reforming which is fed by three feeders. All feeders at the old refinery are underground direct buried copper cables, manufactured in Romania. Due to contaminated soil and electrolysis, the underground cables are attacked by corrosion. All feeders to individual unit substations are equipped with KWh meters (active power only).

All 6 kV to 0.4 kV transformers are oil filled and manufactured in Romania. Oil spots from leaks were observed on some transformers. One transformer was out of operation due to oil leakage.

The 6 kV unit substations were manufactured in Romania. They are in good condition and well maintained.

During the DMC visit, it was noted that the refinery lighting system was in poor condition. There were numerous missing fixtures on light poles and missing bulbs in many locations including offices, control rooms, process units, and roadways. Process unit and road lights are a mix of mercury and fluorescent lighting and control rooms and offices use fluorescent lighting. At night only 5 percent of the roadway lights were on, 10 to 15 percent of the lights were on at the process units, and 15 to 20 percent of the lights were on in the control rooms. The refinery is working on the improvements to the lighting system. All lights are operated locally or from the electrical room. Regular lighting operates at 220 VAC, and emergency lighting operates at 220 VDC. There are no building exit signs.

Electrical buildings and rooms

The earthquakes in this area, affected some of the old construction and have resulted in cracks in the electrical building. In addition, the roofs leak and there are broken windows. The electrical rooms are undersized but are kept clean. Spare equipment is well organized.

Freeze protection and maintained temperature

Steam is used for all process and utility lines that require freeze protection and temperature maintenance. No electric heat tracing is used by Petrobrazi.

Electric motors

Nearly 70 percent of the electrical motors are domestic (manufactured in Romania). The remaining 30 percent are from the USSR, USA, and Germany. All motors are AC, three phase, and a synchronous. No variable speed controlled motors are used at the refinery. Because of the simple induction motor construction, there are minimal problems with their operation. The motors are in good condition and well maintained.

Electric motors are used for mechanical drives everywhere in the refinery except for steam turbines driving the regeneration air compressor in the FCC unit and one hydrogen compressor in the reformer unit.

Motor control centers (0.4 kV)

The motor control centers are mainly manufactured in Romania, with the exception of the FCC unit which is of US-manufacture, (Westinghouse) and lacks spare parts. In general, the motor control centers are in good condition and well maintained.

Motor feeders and control cables

All the motor power feeders and control circuits to the local push button stations are cables. The cables are manufactured in Romania and are routed in cable trays. Some cables, especially in the coking unit, are spliced due to a previous fire. Asbestos shields cover the cable trays to reduce cable damage caused by occasional fire in the coking unit area.

3.9 Corrosion

The most serious corrosion problem found in the refinery is in the heat exchangers. See Section F.3.2 for additional information about the corrosion problems. Minor corrosion is exhibited on piping jackets and structural steel support. Repainting is recommended.

3.10 Insulation

The refractory insulation used in the furnaces and FCC reactor appeared to be adequate. The piping exhibited bare sections where insulation has been removed and not replaced.

4. MAINTENANCE POLICY, PRACTICES, AND HISTORY

See Section F.1, Overall Impressions.

G. ENERGY LOSS MONITORING SYSTEM

The Petrobrazi refinery incorporates a comprehensive system of process stream and utility meters. This system does not fully comprehensively meter an individual unit or major equipment basis. To decrease the losses reported for operations and, a Loss Control Committee should be set up, its responsibilities could also be readily extended to energy auditing. Metering accuracy will be an essential aspect for loss control. Utility metering could be checked and reconfirmed at the same time.

Also desirable are more reliable oxygen analyzers to measure the oxygen in furnace/heater flue gas. An "in situ" type oxygen analyzer, such as "Zirtek", where the measuring cell is placed in the firebox, should provide the accuracy and reliability needed. It will also provide high and low alarms and, most of all, a reliable signal for an advance furnace control and monitoring system.

Petrobrazi is planning to computerize the gathering of data from the process units. The measurements for a reliable energy use database are for all intents either already in the system or easily added to it. This data needs to be extracted from the system in a meaningful, timely manner. Energy uses and losses and significant energy trends can then be identified, and programs can be established to minimize losses.

Monitoring should allow process-unit accounting for energy use on a timely basis. Accountability for the efficient usage of the refinery energy then needs to be established, so that goals to reduce energy use can be set and monitored.

H. FUEL SWITCHING/UTILIZATION

1. REFINERY FUEL SYSTEM

Refer to Section B.2 for data relating to the fuel system.

2. GENERAL REVIEW OF POTENTIAL REFINERY USE FOR COAL

The availability of native coal makes a review of coal as an energy source of interest to the national economy. A study on the use of coal as an adjunct or substitute for hydrocarbon fuel streams is, therefore, included in this evaluation.

The refining of crude petroleum in the USA typically requires 380 000 BTU per barrel (crude feed) of fired fuel. Heat is provided by burning a variety of fuels in directly fired heaters. Generally the fuels are a collection of effluent streams in both gaseous and liquid forms from the various operations around the refinery complex.

Coal is frequently used in industry as a fuel source. Generally it is used on large capacity boiler units. There are significant base investment and operating costs and activities associated with feed and ash handling equipment, sulfur removal, etc. that can be charged out over large installations but prove too inhibitive in the economics of small units.

There are many ways to utilize coal as a fuel. Those most applicable to the situation at hand are discussed below. The first two, direct coal firing and coal gasification, are discussed in some detail. Several others, such as coal liquefaction, coal-oil mixtures, coal fired gas turbines are touched upon briefly.

The use of coal in the existing refinery process heaters would most likely be restricted to one of the methods in which a product fuel can be produced in one location and piped to the various users. Plot space in the vicinity of the existing furnaces along with safety considerations typically does not allow for coal and ash storage and handling facilities within the refinery processing area. Also existing equipment is not designed for the particulate loading experienced in the flue gas with coal firing. In addition, any required sulfur removal equipment would have to deal with flue gas clean-up on an individual process heater basis if there were not a central coal processing facility.

The entire refinery energy and equipment picture dictates if coal could be incorporated into the refinery as a acceptable energy source. If a new process heater or utility boiler would be needed and the fuel balance allows for another fuel source, then the use of coal may be justified and the new coal technologies would be worth looking at. If the residual fuel picture changes because of modifications to the refinery, coal usage may be justified.

2.1 Direct Coal Firing

Coal usage is not a simple thing anymore. Gone are the days of stoking the fire by shovelful of run-of-mine coal and just letting it burn. Coal may need to go through physical cleaning, sizing, and drying just to get it to the furnace. Burners are specially designed to achieve optimum efficiency and low nitrogen oxide emissions. Additives are injected to reduce ash sticking to heater tube walls, reduce sulfur dioxide in the flue gas, etc. Flue gas may be subjected to further treatment such as wet scrubbing to reduce sulfur dioxide to meet tighter levels of environmental acceptance.

Traveling grate burners bring the coal automatically to the burning chamber where the coal is burned. Coal with a moisture content much above 30 percent must be dried before burning, so lignite/brown coals would most likely need pre-combustion drying. Hot under grate air can be used for this purpose. Ash builds up on the grate until it drops into a hopper. The ash is later removed from the hopper. Sulfur, however, must typically be dealt with after combustion where it must be removed as sulfur oxide. Add- on sulfur dioxide equipment adds significant cost to a unit.

Modern direct coal burning systems include atmospheric and pressurized fluidized bed combustion (AFBC and PFBC) units that provide for gas burning, clean-up, and heat recovery all in one unit. Limestone is used as part of the fluidizing medium and the calcium present in it reacts with the sulfur dioxide before it is able to escape from the combustion chamber. The result is a non-toxic disposable by-product.

FBC technology is applicable to a wide variety of fuels including a wide range of coals, residual oil, and petroleum coke. AFBC technology for boilers is available commercially from a large number of licensors, while PFBC technology is still considered to be in the development stages. The application of FBC technology to a process heater may be possible, but it would require extensive pilot test runs and special considerations in equipment design.

2.2 Coal Gasification

Coal gasification has been utilized for a long time and there are several companies (Texaco, Lurgi, IGT, KRW) that have commercialized processes. The products from the gasification, hydrogen, carbon monoxide, carbon dioxide, and others, can be used as a chemical feedstock or a fuel gas. To produce a fuel gas of medium range heating value (9.3 - 18.6 MJ/m^3 or 250 - 500 Btu/SCF) suitable for burning in a process heater, oxygen must be used in the gasification. Because of the reducing conditions present in the gasifiers, most of the sulfur in the coal is converted to hydrogen sulfide. Hydrogen sulfide can be removed from the gas stream by using a number of available processes. In addition, it can be turned into elemental sulfur.

Development work is being done for in-situ desulfurization in a fluidized bed coal gasifier. This process is much the same as the PFBC except that the product is a gas with a heating value instead of combustion product gases. It is also similar to the FBC technology in that it can utilize a wide variety of fuels, such as the sour residual oil produced within the refinery.

Fuel gas produced in this way can be piped into a plant fuel header and used anywhere around the facility. The attractiveness of this option is that the coal usage would be in one central location, while the fuel users could be in many different locations.

Another possible use of the gas produced via gasification could be as a fuel for a gas turbine. The gas turbine could be used to generate electricity or to provide a direct large capacity mechanical drive such as for a compressor. The thermal efficiency of a gas turbine is typically raised by using the turbine exhaust gas to raise steam in a waste heat boiler in what is called co-generation.

2.3 Other Technologies

<u>Coal liquefaction</u>

Production of liquid fuels from coal can be either indirect or direct. In indirect liquefaction, the synthesis gas produced in a gasification step is further reacted to produce a readily burnable fuel (i.e., via the Fischer Tropsch process to naphtha, diesel and waxes or via syngas to methanol to gasoline). Since the gasification product would be an adequate fuel for the heaters in the refinery, there would be no need to go beyond that step to liquid fuels.

Direct liquefaction producing a Number 2 type fuel oil would be more applicable to the fuel needs in the refinery. Several processes have been developed since the 1960s including H-Coal, SRC-I, Exxon Donor Solvent, and SRC-II (in the USA). The high cost and inefficiency associated with these processes led to the cutback of further development of the technologies as they stood. The early processes have been modified and further developed by the United States Department of Energy (US DOE) and industrial partners into two-stage liquefaction processes. These processes are still not available on a large commercial scale. Estimates are that the cost of a barrel of oil produced by coal liquefaction using such methods might approach $25 per barrel by the late-1990s.

Coal oil/water mixtures

The use of coal slurried with oil or water to produce a usable fuel is also the subject of numerous studies and optimizations. There are even annual conferences on "Coal & Slurry Technology" sponsored by the Coal & Slurry Technology Association and the U.S. DOE's Pittsburgh Energy Technology Center (PETC). Coal water mixtures can be prepared with up to 70 percent solids, while current technologies and pilot plant results show coal oil mixtures are limited to 30 to 50 percent solids. Coal-oil mixtures could be prepared in one location and pumped around the plant to the various process heaters, however, emissions in terms of sulfur dioxide, NOx and particulates would be a problem at each furnace.

Coal-fired gas turbines

Direct coal-fired gas turbines are being developed and improved by General Electric, Westinghouse, and United Technologies. The use of gas turbines in this manner on the refinery would most likely be restricted to electricity generation. Solids and impurities deposition on blades and casings would likely require frequent cleaning and duplication of equipment to even out loads. Environmental control requirements would also likely limit the application of this technology to high quality coals.

Fuel cells

The combination of coal gasification and emerging fuel cell technology presents an attractive high efficiency electrical and heat energy generation possibility. Current projections, based on work sponsored by the US DOE, indicate an efficiency level between 45 and 55 percent in converting hydrocarbons directly to electricity. The hydrogen and carbon monoxide rich fuel from coal gasification is suited to fuel cell use, with carbon dioxide used in the cathode side of the cell.

Of the four major fuel cell technologies, two are worthy of mention here - phosphoric acid and molten carbonate. Phosphoric acid fuel cells are at a more advanced state; however, they operate in the range of 200°C compared to molten carbonate cells that operate at 650°C.

The molten carbonate fuel cell is best suited for use with coal gasification in applications where good quality heat is needed. The exhaust gas temperature of 650°C is useful in the generation of high quality steam for process purposes. The use of bottoming cycles further enhances the system.

Overall efficiencies including electrical and recovery of exhaust gas heat to generate steam are in the order of 80 percent. The US DOE is sponsoring sub-megawatt tests of commercial sized units. These tests are scheduled for the 1993 calendar year. While the technology is not ready for commercial use, it is potentially attractive and should be watched closely.

3. COAL AT THE PETROBRAZI REFINERY

3.1 Availability and Characteristics of Coal

Currently, coal is not used at the refinery. Data on coal used in Romania is contained in the Characterization Report.

3.2 Potential for Use

Modifications to equipment and/or the space required for coal handling, flue gas desulfurization, etc., will require a major capital investment. This will probably not occur in the near future.

3.3 Economics of Use

New coal burning furnaces are not an attractive alternative for the Petrobrazi refinery at this time due to the high capital cost and space requirements for coal use.

References and Bibliography

Feldkirchner, Harlan (conversation 11 July 1991); Institute of Gas Technology, Chicago, Illinois, USA.

Stauffer, Chris (conversation 11 July 1991); Process Sales Company (representative for Pyropower Corp.), Houston, Texas, USA.

Scowden, James (conversation 15 July); Detroit Stoker, Monroe, Michigan, USA.

Ekmann, James M. (conversation 15 July 1991); Coal Combustion Division, United States Department of Energy, Pittsburgh Energy Technology Center (PETC), Pittsburgh, Pennsylvania, USA.

Vander Molen, Robert H. (conversation 19 July 1991); Combustion Power Company, Menlo Park, California, USA.

Dellefield, Randy (conversation 19 July 1991); United States Department of Energy, Morgantown Energy Technology Center (METC), Morgantown, West Virginia, USA.

Podolski, Walter F. (conversation 19 July 1991); Chemical Technology Division, Argonne National Laboratory, Argonne, Illinois, USA.

Engineering & Economics Research, Inc., Hagler, Bailly & Co.,Inc., PEI Associates Inc., Spaite, Paul W. ;"Emerging Clean Coal Technologies"; Noyes Data Corporation; Park Ridge, New Jersey, USA; 1986.

Cooper, Bernard R. and Ellingson, William A.; "The Science and Technology of Coal and Coal Utilization"; Plenum Press, New York; 1984.

Lord, Norman W., Ouellette, Robert P., Farah, Oscar G., Cheremisinoff, Paul N.; "Coal-Oil Mixture Technology"; Ann Arbor Science Publishers; 1982.

McGurl, Gilbert V.; "Two-Stage Liquefaction of Coal"; PETC Review, PETC; Issue 1, March 1990.

I. REFINERY EMISSIONS

1. SUMMARY OF ENVIRONMENTAL SURVEY

1.1 Refinery Sulfur Balance

Currently the refinery is processing Romanian crude at the rate of 3 million tonnes per year. The crude has a sulfur content of 0.5 percent.

It was reported that 8 weight percent of the sulfur remained in the products and 12 weight percent was released to the atmosphere through flares. Of the sulfur in the products, 24 weight percent is contained in the heavy fuel oil combusted on-site. Therefore, approximately 36 weight percent of the sulfur in the arriving crude is emitted to the atmosphere. This translates into approximately 5 400 tonnes per year of sulfur or 10 800 tonnes per year of sulfur dioxide released to the atmosphere.

Summary	tonnes/year
Sulfur in Crude	15 000
Sulfur in Product	1 320
Sulfur released in flares	1 800
Sulfur released in boilers/heaters	3 600
Total Sulfur released to air	5 400
Total sulfur dioxide released to air	10 800
Sulfur recovered	6 480

1.2 Air Emissions

The plant does not have data to estimate the air emissions of hydrocarbons from any of the operating units, tank farm, crude unloading and product loading facilities, combustion units, or waste water treatment units.

1.3 Water Quality

The plant has three waste water treatment plants. Two of the plants (WWTP I and WWTP III) mostly treat the waste water from the refinery. Table H.1.3.1. compares the standards and the two treatment plant effluents.

TABLE H.1.3.1 - WASTE WATER TREATMENT STANDARDS VS. ACTUAL

Item	Standard	WWTP I	WWTP III
pH	6.5-8	6.5-8	7-7.5
Oil mg/l	8	1-8	8
TSS mg/l	50	6	25
Phenol mg/l	0.1	0	0.4
Total SO_4	0.5	0	NA
BOD	20	89	91
COD	100	440	435

The rainwater flows through ditches and culverts to the river. No treatment is currently provided and no government standards on the discharge are imposed.

The ground water under the refinery is contaminated. Refinery personnel have investigated the ground water by installing piezometer and ground water sampling wells. This investigation determined the amount of contamination and the direction of ground water flow. Based on the results of the investigation, a bentonite slurry wall was constructed and the number and location of ground water extraction wells were determined.

The extraction wells were installed up stream of the slurry wall and into the uncontaminated ground water. The uncontaminated ground water is pumped to the river untreated. The cone of depression created by the pumping captures the floating hydrocarbon layer. A separate pump is installed to pump the accumulated hydrocarbon layer. This layer is pumped to the slop tanks for recycling. No current plans have been established to investigate and eliminate the source of the hydrocarbon layer.

1.4 Solid Wastes Disposal

The sludge streams are currently processed by two separate methods. The oily sludge from tank bottoms and separators are pumped to an oily sludge lagoon. The water treatment, DAF float, and excess biological sludges are treated in a thickener/centrifuge system. The thickened sludge from the centrifuge is currently being stored and will be processed through a rotary kiln which is currently being installed.

A third solid waste stream spent fluid catalytic cracker catalyst is recycled to the catalysis manufacturer. The catalysts from Teleajen are combined and recycled. Estimated quantities of solid wastes are shown in Table H.1.4.1

TABLE H.1.4.1. - SOLID WASTE DISPOSAL QUANTITIES

Source	Quantity	Solid Content	In Storage*
Oily Sludge	300 m^3/d	1%	9%
DAF	350 m^3/d	2-8%	
Water Treatment	300 m^3/d	1%	10%
Waste Activated Sludge	1570 m^3/d	1%	

* in storage is defined as thickened in the oily sludge lagoon after centrifuging.

1.5 Impact of Maintenance

Funds to obtain and warehouse spare parts are lacking. This has a significant impact on the control of pollutants released to the environment. This was evidenced by:

- Excess oil loss to the sewers
- Excess oil accumulation of oil at separators
- Clarifiers not operating
- Clarifier overflow not balanced around the effluent outflow
- Excessive smoke in the stacks
- Centrifuges not operating at capacity
- Incinerator not operating

1.6 Evaporation Losses

The plant currently does not have an estimate of the amount of hydrocarbon or solvent loss. Qualitatively, significant quantities of free oil are evident on the ground, in the sewers, on the surface of the waste water treatment plant devices, and in the oily lagoons.

The refinery should use an organic vapor analyzer (OVA) as the start for a program of identifying areas of major hydrocarbon loss.

1.7 Loss of Products to Solvents

No data was secured nor observations made in this area.

2. HANDLING OF MATERIALS

2.1 Heavy Metals

The heavy metals that accumulate in the tank bottom and sludges from the separators and waste water treatment plant are not being processed in an environmentally acceptable manner. They are not stabilized and stored to prevent the potential of leaching into the ground water.

2.2 Sulfur

The overall sulfur handling is less than environmentally satisfactory. The sulfur that is removed by sodium scrubbing is handled properly and recycled to a local paper mill for use. The remaining sulfur that is removed from the crude is either vented as hydrogen sulfide or flared to the atmosphere as the Claus unit is not operating.

2.3. Sulfuric and Hydrofluoric Acids

The plant is not controlling nitrogen oxide or sulfur dioxide emissions. No data relative to the levels of emissions from the various combustion sources are available. The refinery should use a portable stack-gas analyzer to monitor emissions.

2.4 Combustion Products

No data were secured nor observations made in this area.

2.5 Tars

No data were secured nor observations made in this area.

3. MEASUREMENT OF EMISSIONS

During the time of the environmental audit, there were no environmental samples collected or emissions measured.

According to the Petrobrazi administration, Romania has regulations establishing the limits of emissions for various components. However, the actual level of air pollution appears to be very high, but no quantitative data was available. The refinery does not have any modern instruments which would permit continuous monitoring of emissions from the many air pollution sources. Nor does the staff have experience with and knowledge of methods for continuous emissions monitoring and the related instrumentation.

Since the success of any emissions monitoring program is critically dependent on experience, it is recommended that Petrobrazi be furnished with a portable integrated system for flue gas analysis and short term monitoring. Such a system will measure sulfur dioxide, nitrogen oxides, carbon monoxide, and carbon dioxide levels; temperature; and stack draft efficiency and will test the smoke. This portable analyzer would permit the refinery to develop initial monitoring skills. Even more important is that in using this portable analyzer the refinery would be able to accomplish a detailed emissions audit of all the pollution sources, evaluate the degree of pollution contributed by each source, and develop some strategies for reducing the emissions even before starting the first continuous emissions monitoring system at the refinery. It could also help in firing the furnaces more energy efficiently.

4. SPECIFIC RECOMMENDATIONS

The following recommendations, if implemented, could reduce the current level of environmental emissions and bring the refinery emissions closer to the levels of refineries in Western Europe.

- Complete an inventory of the waste flow from each process block
- Correct the sources of the pollution as found in the block survey
- Increase the frequency of oil and sludge removal at the various separators
- Survey the combustion sources to determine which are emitting excess hydrocarbon, carbon monoxide, or nitrogen oxides
- Install automatic combustion control systems on those sources found to be emitting excessive amounts of hydrocarbons, carbon monoxide, or nitrogen oxides
- Accelerate the installation of the new rotary kiln incinerator
- Evaluate the potential of sludge blending which will allow re-activation of the existing fluid bed incinerator

- Revamp the sulfur removal system
- Upgrade the oil separators (API)
- Upgrade the DAF unit
- Replace broken aerator gear boxes
- Repair existing clarifiers
- Install a rain water collection and oil skimming lagoon
- Recycle the treated rain water
- Install a two to five day retention aerated lagoon for the combined refinery waste water.

In summary the following plan of action is recommended:

Immediate

There were three existing conditions which could be changed that would improve the local environmental conditions:

- Control excess oil on separators and catch basins

  The current practice is to remove the accumulated oil by use of a vacuum truck. To improve the water quality, the frequency of collecting the oil must be increased. This increased maintenance should be carried on until the mechanical equipment for continual removal is either installed or repaired.

- Reduce air pollution emissions from flare system

  Institute a program to make the block operators more responsible for the unit's flaring and initiate the use of atomization steam on the smokeless flares when flaring is necessary. A portable stack gas analyzer could be used for this purpose.

- Closely monitor process heaters emissions

  Perform frequent visual or spot monitoring of oxygen, carbon monoxide, nitrogen oxides, or soot and adjust the combustion air, atomization steam, or fuel flow to reduce the particulate (soot), nitrogen oxides, and carbon monoxide emissions. A portable stack gas analyzer could be used for this purpose.

Medium term

The medium term actions that could be taken to reduce the local environmental emissions are:

- Install automatic combustion controls on all combustion units
- Revamp the sulfur control systems
- Upgrade the mechanical sludge/oil removal systems on the oil/water separators
- Replace broken aerator gear boxes
- Revamp the DAF units:
  . Flocculation tank mixing
  . Float/sludge collectors
  . Float oil recovery systems
- Revamp the biological clarifiers
- Complete installation of the new rotary kiln
- Install an aerated lagoon (3 to 5 day capacity) for the treated effluent
- Install a storm water lagoon, as large as reasonable land use will allow
- Recycle the collected rain water after oil skimming to the refinery intake
- Recycle the new aerated lagoon water to the refinery intake
- Initiate specification and bid request for cooling water hydrocarbon removal and implementation following repair of leaking equiprnent
- Acquire a portable air analyzer for detecting and measuring hydrocarbons in the air and aqueous samples

- Acquire continuous emissions monitoring analyzers for environmental control
- Acquire a portable hydrocarbon analyzer for gaseous or liquid streams for detection of hydrocarbon leakages to condensate, cooling water underground sources, etc.

Long Term

The following long term improvements would reduce the environmental losses:

- Install low nitrogen oxide burners on all fuel units
- Install vapor control on storage tanks
- Cover the API separators
- Cover the DAF units
- Clean-up the oil sludge lagoons
- Initiate a program of soil clean up to eliminate ground water pollution.

J. ENERGY EFFICIENCY IMPROVEMENTS

An effective energy improvement program would be more successful if it were implemented following a comprehensive refinery overhaul to upgrade the equipment to international industrial standards. The upgrade program would include a provision for proper and adequate spare parts.

The energy efficiency improvement opportunities described in this section are not given in any special order. Except for being organized in terms of immediate medium-term, and long-term opportunities.

An important improvement is the need to institute methods and procedures for identifying and effectively controlling all material losses. This task will be difficult, time consuming, and expensive to implement based on the observed state of equipment and instrumentation capabilities. However, the reported losses must be eliminated as they represent an order of magnitude of savings similar to those that can be accomplished by all the other major efforts of improving energy efficiency throughout the refinery.

1. IMMEDIATE OPPORTUNITIES

- Institute a "Material Control Committee" with responsibility to identify and reduce hydrocarbon losses to more acceptable levels.
- Utilize a variable frequency drive on a trial basis for a high pressure drop control valve service to reduce excessive pump power needs.
- Alternatively, trim impellers on pumps delivering excessively high heads and control valve losses.
- Test the reduction of stripping steam rates to the atmospheric and vacuum tower bottoms together with increased bottom side stream off-take. It is expected that product quality should be little affected.
- Commission a study for minimizing waste heat boiler tube corrosion problems that lead to long term losses when out of service.
- Consider a short term test on decreasing desalter water application together with improved demulsifier selection. The aim is to minimize water injection without affecting salt reduction.
- Investigate power recovery turbines in high pressure drop liquid let down service in the gas oil hydrotreater.

- Insulate bare piping, fittings, pumps etc. where the service temperature exceeds 65°C. It is acknowledged that flanged joints are to be left bare in hydrogen service for safety reasons.

- Investigate the economics of converting to low nitrogen oxide burners.

- Develop a heat exchanger monitoring system to follow fouling trends and measure effectiveness of performance in order to optimize cleaning schedules.

- Acquire low cost refinery simulation software to improve in-house studies for increasing energy recovery projects.

- Acquire suitable linear programming (LP) software for performing refinery operations optimization studies.

- Acquire or develop a maintenance control program for all process equipment.

- Arrange for the training of a qualified staff member in the techniques and use of "Pinch" technology.

- Study the potential benefits of a preflash system before the crude tower utilizing process simulation and "Pinch" technology.

- Arrange attendance of suitably qualified staff to short "professional advancement" courses on fired heaters, advance control systems, environmental and loss control, etc. as appropriate.

- Acquire a portable flue gas analyzer to aid in heater control improvements.

- Acquire a non-contact industrial thermometer to aid in the monitoring of hot spots for maintenance correction.

- Commission an energy audit of the FCCU to identify the cause of the high energy consumption and to provide recommendations for improvement.

- Initiate effective combustion air control program on all process heaters.

2. MEDIUM TERM OPPORTUNITIES

- Evaluate the installation of corrosion resistant rotors in the Ljunstrom air preheaters.
- Extend surface area of the waste heat recovery coil in Crude Unit 1 to reduce the stack gas temperature.
- Consider the merits of a crude receiving custody transfer installation.
- Arrange attendance of a suitable staff member to an education/training seminar on USA environmental practices and monitoring.
- Commission a study on the strategy and instrumentation for tank farm management to minimize loss of crude oil and products, decrease energy use, and more effectively manage inventory.
- Commission a study for inter-unit product transfers and accounting to control oil loss.
- Arrange attendance of appropriate staff to short term business management courses for an introduction to Western practices, methods and techniques.
- Study the addition of a vacuum pump to replace the steam vacuum jets in the normal operation of the vacuum unit.
- Commission a comprehensive feasibility study for the recovery of low level refinery waste heat for district heating.

3. LONG TERM OPPORTUNITIES

- Commission a study for visbreaking vacuum residue to a lower viscosity fuel oil stream and recovery of lighter products.
- Procure numerical control units for the maintenance shop and write programs for time consuming tasks such as tube sheet drilling.

J. ENERGY EFFICIENCY IMPROVEMENTS

1. IMMEDIATE OPPORTUNITIES

Petrobrazi Refinery

Description	Cost	Pay-Off
1. Institute a "Material Control Committee" to be responsible for carefully examining all aspects of hydrocarbon movements and processing to satisfactorily close the mass balances for all operations and identify the points of all losses. Thereafter to implement actions to control and minimize these losses through a practical loss prevention strategy and to monitor the results on a continuing basis.	Negligible considered to be a normal extension of Refinery Management and operational responsibilities.	At 3 500 000 tonnes/year capacity and $150/tonne crude a 0.01 percent decrease in refinery losses reported would equal $52 500/year

J. ENERGY EFFICIENCY IMPROVEMENTS

1. IMMEDIATE OPPORTUNITIES

Petrobrazi Refinery

Description	Cost	Pay-Off
2. Test performance and effectiveness of variable speed drives on selected high pressure drop pump circuits using variable frequency control. Select situation(s) where the control valve drop approximates 30 percent of total pump head at normal flow which would rise to 50 percent or more at a reduced 85 percent capacity rate or less. Note: Suggest crude unit feed pump trial and if experience is satisfactory extend to other appropriate applications	50 kw: Material = $ 9 000 Installed = $11 500 (@1.25 Factor) 200 kw Material = $31 000 Installed = $38 750	Power cost use = $0.06/kwh 50 kw Pump @ 30% CV loss = 15kw x 24 x 330 x 0.06 = $7 128/year Payout = $11 500/7128 = 1.61 years 50 kw @ 50% CV loss; payout = 0.97 years 200 kw Pump @ 30% CV loss; payout = 1.36 years @ 50% CV loss; Payout = 0.82 years

J. ENERGY EFFICIENCY IMPROVEMENTS

1. IMMEDIATE OPPORTUNITIES

Description	Cost	Pay-Off
3. Trim selected pump impellers where excessive control valve pressure drop is observed to a minimum 0.1 MPa pressure drop at design flow rate. If total head can only be reduced 10 percent the energy savings will be significant. Note: Crude and vacuum unit feed pumps are best candidates	Approximate 40 man hours or say $500 per impeller	Power cost at $0.06/kwh 50 kw Pump 5 kw x 24 x 330 x $0.06 = $2 376/year Payout = 0.21 years = 11 weeks 200 kw Pump 20 kw x 24 x 330 x $0.06 = $9 504/year Payout = 0.0526 years = 2.7 weeks

J. ENERGY EFFICIENCY IMPROVEMENTS

1. IMMEDIATE OPPORTUNITIES

Description	Cost	Pay-Off
4. Consider a short term test for reducing stripping steam rate to the atmospheric bottoms from 3.5 weight percent to approximately 2.0 weight percent. The degree of overflash and/or offtake of 1+4 atmospheric gas oil should also be investigated. Objective is to reduce the steam injection rate without affecting product quality to any significant degree. Expected savings: up to 1.7 tonnes/hour steam Note: Similar test also applicable to the vacuum tower	Negligible but allow $5 000 for increased lab testing	LP Steam $6.61/tonne Value = 1.7 tonnes/hr x $6.61 x 24 x 330 = $88 997/year Payout = 0.056 years = 3 weeks

J. ENERGY EFFICIENCY IMPROVEMENTS

1. IMMEDIATE OPPORTUNITIES

Petrobrazi Refinery

Description	Cost	Pay-Off
5. Commission a study to mitigate corrosion effects in fuels and lube plant waste heat boilers due to increasing flue gas sulfur.	Budget $5 000 to $10 000	Indeterminate depending upon study results and recommendations.

J. ENERGY EFFICIENCY IMPROVEMENTS

1. IMMEDIATE OPPORTUNITIES

Petrobrazi Refinery

Description	Cost	Pay-Off
6. Consider a short term test program for a step wise decrease in desalting water application together with laboratory advice on optimum/economic selection of demulsifier agents. Note: A 1.0 percent decrease in water injection rate for a crude run of 3 500 000 tonnes/year will save: Ca 4420 x (110-20) = 398 000 kcal/hr	Negligible but budget $5 000 for extra laboratory work and engineer's time	Fuel: $62/tonne @9.5 x 10^6 kcal/tonne A 1.0% decrease 398 000/(9.5 x 10^6) x 113.15 = $2.60/hr x 24 x 330 = $20 572/year

J. ENERGY EFFICIENCY IMPROVEMENTS

1. IMMEDIATE OPPORTUNITIES

Petrobrazi Refinery

Description	Cost	Pay-off
7. Investigate economic feasibility for effective power recovery from high pressure liquid let-down in gas oil hydrotreater.	Budget: Hold until suitable machine for the service can be identified.	Undetermined. Await study results.

J. ENERGY EFFICIENCY IMPROVEMENTS

1. IMMEDIATE OPPORTUNITIES

Description	Cost	Pay-Off
8. Insulate bare pumps, valves, piping etc. and jacket with aluminum where process temperature exceeds 65°C. Note: Flanged joints to be left bare in hydrogen service for safety reasons.	Assume 20 items at 1.0 m^2 each Installed cost at \$210/m^2 = \$52 500	At average process temperature = 150°C heat loss with 3 m/sec wind approximately 3 200 kcal/m^2 = 800 000 kcal/hr Fuel: \$62/tonne @ 9 500 kcal/kg Savings: (0.800/9.5) X 62 x 24 x 330 = \$41 351/year Payout = 1.27 years

J. ENERGY EFFICIENCY IMPROVEMENTS

1. IMMEDIATE OPPORTUNITIES

Petrobrazi Refinery

Description	Cost	Pay-Off
9. Investigate the potential for the gradual replacement of existing heater burners with high efficiency low nitrogen oxide burners Objective: - Improved air/fuel control - Decreased nitrogen oxide emissions as stricter environmental regulations are enforced - To be implemented upon positive cost/benefit results or when environmental concerns dictate.	Budget $5 000 for study. Undetermined until study completed in respect to implementation.	To be established by study

J. ENERGY EFFICIENCY IMPROVEMENTS

1. IMMEDIATE OPPORTUNITIES

Description	Cost	Pay-Off
10. Develop and institute a heat exchanger train temperature and pressure monitoring program to detect fouling rates with aim to optimize an anti-foulant injection and/or a cleaning program.	Minimal	Undetermined, but an improvement on existing practice

J. ENERGY EFFICIENCY IMPROVEMENTS

1. IMMEDIATE OPPORTUNITIES

Petrobrazi Refinery

Description	Cost	Pay-Off
11. Acquire a suitable refinery linear program (LP) software, such as "PIMS", to enable the reliable modelling of the refinery and eventually the total complex. When completed (allow 6 months) the model will permit a systematic approach to optimizing operations with regard to feedstock/processing costs and product marketing realities. As experience is gained, the model can be utilized to study, analyze and identify: • areas of existing deficiencies • means of maximizing product profitability • optimum modernization possibilities.	Budget: Software: $5 000 Staff: 2 man years estimated at $100 000	Undetermined, but at 3 million tonnes per year crude throughput at $150 tonnes $450 million/year $100 000 represents 0.022% of crude cost. Experience indicates average improvements of 10% in operational profitability can be achieved using LP techniques

J. ENERGY EFFICIENCY IMPROVEMENTS

1. IMMEDIATE OPPORTUNITIES

Petrobrazi Refinery

Description	Cost	Pay-Off
12. Develop or acquire a maintenance history program or more sophisticated history, spare part catalogs/inventory repair method work order, etc. program to monitor and initiate a more effective preventive maintenance system for process equipment Objective: To better track equipment problems and devise strategies to reduce down time and expense of equipment failures.	Budget: Up to $50 000	Undetermined but established as a cost effective procedure in modern maintenance operations.

J. ENERGY EFFICIENCY IMPROVEMENTS

1. IMMEDIATE OPPORTUNITIES

Petrobrazi Refinery

Description	Cost	Pay-Off
13. Arrange for the attendance at a Linhoff- March pinch technology training seminar at a European location of a qualified engineer fluent in English The aim will be to assess existing heat exchange networks for improvements to higher energy efficiency and to pass on the instruction received to other staff members	5 day course approximately $ 2 500	Undetermined but nearly immediate upon the first improvement implemented

J. ENERGY EFFICIENCY IMPROVEMENTS

1. IMMEDIATE OPPORTUNITIES

Petrobrazi Refinery

Description	Cost	Pay-Off
14. Allied with the pinch technology training experience, commission an engineering/economic study for evaluating the merits of installing a preflash tower before the crude distillation tower. This could also involve consideration of alternatives to hydotreating the total overhead naphtha stream and the light end refractionation scheme.	Budget: $5 000 to $10,000	Undetermined but the objective is more effective crude preheat system, recovery of heat from product stream and minimizing refractionation of light ends

J. ENERGY EFFICIENCY IMPROVEMENTS

1. IMMEDIATE OPPORTUNITIES

Petrobrazi Refinery

Description	Cost	Pay-Off
15. Arrange attendance of suitably qualified staff with appropriate language capabilities to short refresher courses in "Professional Advancement" such as conducted at the Amsterdam RAI by qualified US/European instructors. Subject to availability, courses could include: Fired heaters Advanced control systems Environmental & Loss control Engineering Computing Refinery Management Product Quality control Objectives: To introduce participants to state of the art techniques, methodologies and practices in their specialties. Also to provide an important contact with Western colleagues.	Budget: Allow $2 500 per course. Suggest an initial trial of 5 courses for evaluation of benefits	Undetermined but would expect a pay off in 1 year through improved competence

J. ENERGY EFFICIENCY IMPROVEMENTS

I. IMMEDIATE OPPORTUNITIES

Petrobrazi Refinery

Description	Cost	Pay-Off
16. Action Purchase one non-contact industrial thermometer model 514L Thermo Hunter pro Benefit: Allows maintenance crew to measure surface temperature and determine hot spots for energy audits and trouble shooting surveys, thereby leading to energy savings through installation of additional insulation. Supplier: Capintee Instruments, Inc. or equivalent	Budget: $1 500	Less than 1 year

J. ENERGY EFFICIENCY IMPROVEMENTS

1. IMMEDIATE OPPORTUNITIES

Petrobrazi Refinery

Description	Cost	Pay-Off
17. Commission an energy audit of the FCCU to identify the essential cause of the high energy consumption rates reported and issue recommendations for correction with estimated costs.	Budget: $10 000	Undetermined but with energy overruns some 75% above expectations a 10% energy reduction of the 1005 Gkcal/year, based on $62/tonne fuel oil at 9 560 kcal/kg at 80% efficiency is equivalent to $818 800/year

J. ENERGY EFFICIENCY IMPROVEMENTS

1. IMMEDIATE OPPORTUNITIES

Petrobrazi Refinery

Description	Cost	Pay-Off
18. Cooling water treating for hydrocarbon removal two staged effort:		Estimate 5% improvement in heat exchange; consider Distillation Unit #1 as a model: 36.25×10^8 Btu/hr
Stage 1 for Immediate Action Utilizing Present Facilities The staff in charge of water treating should prepare a specification and request for quotation package. Such a request for quotation would be forwarded to world recognized water treating organizations; e.g. Tretolite, Calgon, Nalco, etc. for competitive bid.	Budget: $5 000	$0.05\ (36.25 \times 10^6) = 1.81 \times 10^6$ $3.467(24)(1.81) = $150.61/day
Stage 2 For Future Short Term Capital Improvement Implement the competitive bidder's immediate treatment in existing facilities. Continue study with participation of a consulting engineering firm for capital equipment modernization; e.g. consider John Brown E & C; M.W. Kellog; Bipronaft, Krakow Poland, etc.	Budget: $500 000	5 000/150.61 = 33.2 days Payout = 1 month Payout to be determined by consultant retained

J. ENERGY EFFICIENCY IMPROVEMENTS

1. IMMEDIATE OPPORTUNITIES

Petrobrazi Refinery

Description	Cost	Pay-Off
19. Adjust burner air dampers on all process heaters. Calibrate and install indicating oxygen analyzers in flue gas. Set air dampers to yield 1.3 to 2.1 percent oxygen in the flue gas (approximately 10 percent excess air) Action: Install an "in-situ" type oxygen analyzer in a process unit heater/furnace to help the refinery improve its heater/furnace efficiency by reducing air in the flue gas. Benefits: Improve combustion efficiency. Also, since the refinery has no modern zirconium oxide oxygen analyzers, such an instrument will help the refinery personnel to get familiar with highly reliable and accurate analyzers. Supplier: Termox (Ametek), Model WDG-IV $5 000 Undetermined	Budget: Instrument = $30 000 Installation = $10 000 Total = $40 000	Save 3% energy use Heater F-1 Crude Unit #1 for typical example: $0.03(75x10^6) = 2.25x10^6$ $3.467(225)(24) = 187.22/day 40 000/187.22 = 213 days Payout = 8 months

J. ENERGY EFFICIENCY IMPROVEMENTS

1. IMMEDIATE OPPORTUNITIES

Petrobrazi Refinery

Description	Cost	Pay-Off
20. Action: Attendance at education training seminar related to US practices of continuous emissions monitoring and related instrumentation. Benefit: Result will be improvement in current practices of continuous emissions monitoring and savings due to purchasing proper instrumentation	Sending U.S. instructor to the refinery $5 000	Undetermined

J. ENERGY EFFICIENCY IMPROVEMENTS

1. IMMEDIATE OPPORTUNITIES

Description	Cost	Pay-Off
21. Action: Purchase portable air analyzer model "Scentoscreen" Benefit: Measures total hydrocarbons and volatile and semi-volatile organic compounds such as gasoline, benzene, toluene, ethyl benzene, xylene, C1-C6, components in air and in water samples. Will permit to audit hydrocarbon leakages in cooling water and condensate return systems, leakages in tank-farms and air pollution. Supplier: Sentex Technology, Inc.	Under $12 000	Less than 1 to 2 years

Description	Cost	Pay-Off
1. Replace Ljungstrom air preheater with stainless steel or equal corrosion resistant plates in two power boilers. Ref: Tel contact with Ljungstrom	Budget: Carbon steel $100 000 each 36 month life Stainless steel $250 000 each 240 month life Installation cost: $20 000 each, estimated	Based on 240 month term: Carbon Steel Units 240/36 x 2 x $100 000 = $1 333 333 Installation costs: = 240/36 x 2 x $20 000 = $266 660 Total expense = $1 600 000 Stainless Steel Units = 2 x $250 000 = $500 000 Installation cost: 2 x $20 000 Total expense = $540 000 Savings 1,060/20 years = $53 000/year in favor of stainless steel Note: This simple analysis excludes financial discounting and energy losses

J. ENERGY EFFICIENCY IMPROVEMENTS

2. MEDIUM TERM OPPORTUNITIES

Petrobrazi Refinery

Description	Cost		Pay-Off
2. Crude Unit No. 1 Add low pressure steam waste heat recovery unit to supplement existing steam coil. reduce flue gas exit temperature from 362°C to 177°C based on the practical minimum limit of flue gas temperature For sulfur corrosion reduction. Generate saturated steam 149°C 4 bar boiler feed water supply 16°C. Steam rate = 3.43 tonnes/hour This opportunity also exists in Crude Unit No. 2 FCCU and the Hydrotreating Unit	Budget: Installation: Instrument: Total:	$135 000 $120 000 $ 15 000 $270 000	Save 8.66 x 10^6 Btu/hour $3.467(24)(8.66) = $720.58/day 270 000/720.58 = 374.7 days Payout 1 year + 1 month

J. ENERGY EFFICIENCY IMPROVEMENTS

2. MEDIUM TERM OPPORTUNITIES

Description	Cost	Pay-Off
3. Continuous emissions monitoring CO, SO_2, NO_x, CO_2 or O_2 and capacity Suppliers: Lear Siegler, Anarad, Rosemont	Up to $100 000 per source, depending on the updated National rules and regulations	Dependent on regulations and penalties

J. ENERGY EFFICIENCY IMPROVEMENTS

2. MEDIUM TERM OPPORTUNITIES

Petrobrazi Refinery

Description	Cost	Pay-Off
4. Custody Transfer installation (crude receiving). Transportable meter prover with trailer (no truck) Suppliers: Xelix or Brooks	$200 000 to $350 000	Undetermined

J. ENERGY EFFICIENCY IMPROVEMENTS

2. MEDIUM TERM ?ORTUNITIES

Petrobrazi Refinery

Description	Cost	Pay-Off
5. Action: Commission a study to evaluate best strategy and instrumentation for tank farm management Benefit: Will permit to eliminate unnecessary losses of crude and oil products	Undetermined	Undetermined

129

J. ENERGY EFFICIENCY IMPROVEMENTS

2. MEDIUM TERM OPPORTUNITIES

Petrobrazi Refinery

Description	Cost	Pay-Off
6. Action: Commission a study to evaluate the best strategy and instrumentation for inter-unit product transfer and accounting. This study should account for pending organizational changes in the refinery. Benefit: Reduction of unnecessary losses of products	Undetermined	Undetermined

J. ENERGY EFFICIENCY IMPROVEMENTS

2. MEDIUM TERM OPPORTUNITIES

Description	Cost	Pay-Off
7. Arrange for the attendance of appropriate qualified staff to a short term course in Business Management at an approved or certified institution in the USA or Europe. Objective: To acquaint East European managers with modern business practices, methods and techniques and to provide the opportunities for useful contacts and bonds with their Western counterparts.	Budget: Assume 2 to 3 month courses and 3 to 5 participants over a two year period at $10 000/month $60 000 to $150 000 (estimated)	Undetermined, but should contribute to and improve refinery organization, efficiency and potentially its profitability

2. MEDIUM TERM OPPORTUNITIES

Petrobrazi Refinery

Description	Cost	Pay-Off
8. Commission a comprehensive feasibility study for the optimum recovery of low level refinery waste heat streams for use in district heating in the town of Ploiesti. A full and comprehensive cost/benefit analysis is to be prepared and a specification for competitive bidding is recommended.	Budget: $25 000 to $50 000 for a comprehensive investigation	Undetermined, but expected to be very energy efficient. Note: Other local refineries could also effectively contribute to the scheme so close coordination is desirable.

J. ENERGY EFFICIENCY IMPROVEMENTS

3. LONG TERM OPPORTUNITIES

Petrobrazi Refinery

Description	Cost	Pay-Off
1. Action: Commission a study to evaluate the refinery needs in modern analytical equipment for the Central Laboratory and modern on-line process analyzers. Benefits: Results in improved energy efficiency and product yield and consistency.	$5 000	Undetermined

J. ENERGY EFFICIENCY IMPROVEMENTS

3. LONG TERM OPPORTUNITIES

Petrobrazi Refinery

Description	Cost	Pay-Off
2. Commission a study regarding visbreaking vacuum residue for viscosity reduction leading to decreased heating for firing and/or improved steam atomization and firing efficiency plus recovery of valuable lighter products.	Budget $25 000	Undetermined

Description	Cost	Pay-Off
3. Procure numerical control units for the maintenance shop lathes and milling machines. Write or obtain numerical control programs for the most common and time consuming tasks such as tube sheet drilling, for example.	Cost to be evaluated against commercial bid tabulation versus minimum shop requirements	Undetermined but to be based upon productivity improvements

Description	Cost	Pay-Off
4. Action: Field and Control Room Instrumentation Commission a study to evaluate best strategy for implementation of modern field and control room instrumentation, including DCS Benefits: This study will permit establishing the most economical ways of implementation of modern instrumentation along with modernization of the refinery's process units.	Roughly estimated at $1 700 000 for 3 process units	Similar instruments in Western refineries have paid off in 2 to 3 years or less.

K. ENVIRONMENTAL EMISSIONS REDUCTIONS

1. IMMEDIATE OPPORTUNITIES

During the field observations at the oil/water separators (API type) two major problems were observed:

- sludge/float collection system was not operating
- excessive accumulation of top oil float and bottom sludge

The collection system is a traveling bridge type. According to the refinery personnel the system never worked. There did not appear to be any cause that would prevent it from operating. Therefore it is recommended the traveling bridge mechanism be inspected, reconditioned, and reactivated.

Oil float and sludge has accumulated because the collection system is inoperative. The infrequent removal of the floating oil has allowed the oil/water interface to approach the bottom of the underflow bottle. The high velocity near the bottom of the bottle allows for the re-entrainment of oil from the thick oil cover.

Also, the infrequent removal of the settled sludge decreases the water/oil detention time reducing the effective cross-sectional area and increasing the throughput velocity. The reduced detention time and increased throughput velocity prohibit the oil from separating from the water and flowing to the top of the separators. Together these conditions cause free oil to be evident in the flow channel down stream from the oil/water separator.

This condition will be corrected when the traveling bridges are reconditioned and reactivated. In the interim, the sludge and oil float can be removed more frequently. Doing this could maximize both the detention time and the vertical space between the bottom of the underflow bottle. This will minimize the amount of free oil flowing to the next unit, which is the dissolved air floatation (DAF) unit.

The DAF unit consists of a mix tank, flocculation tank, air tanks, recycle pumps, and clarifiers. The following operational conditions were noted during the audit:

- The mixing paddles operating in the mix tank
- No flocculent or polymer being fed to the mix tank
- One flocculation tank operating and one out of service
- Uneven air distribution in the operating flocculator due to plugged or missing air jets at the bottom of the tank

- Oil accumulation on the flocculation tank water surface
- The air blowers, recycle pumps, and the clarifier sludge/float rake mechanism on both separators were not operating resulting in a thick oily float on the water surface of the separators
- An old lime deposit at the top of the mix tank indicating that lime had been added at some time but not recently.

The lack of proper operation of the DAF was evidenced by the amount of free oil floating in the aeration unit, the next unit downstream.

The refinery has two separate aeration sections for the two separate flows from the refinery areas. These are noted as Unit #1 and Unit #3. Unit #2 treats mostly the waste water from the petrochemical area. The aeration is provided by fixed platform turbine type aerators. The following status of the aerators was noted.

Aeration Unit	Number of Units	Number Not Operating	Manufacturer
#1	26	3	French
#3	28	25	Local

The three French units in Aeration Unit #1 have had a long operating life. The three that are out-of-sequence are waiting for spare parts.

The aerators for Unit #3 should be upgraded by either providing new units or at least improved gear reduction boxes. The local supplier no longer makes gear boxes and therefore the plant maintenance machine shop must fabricate the replacement parts. The plant fabricated parts do not last long before failure.

During the time of the audit, it was noted that the flare systems were flaring. During the flaring, an excessive amount of smoke was generated. It was explained that the atomization steam, required to minimize the production of soot, was turned off as an energy conservation move.

The process unit operator does not always know if a unit is flaring. When a unit is observed to be flaring, a flare watcher calls each shift foreman of the units discharging to the flare. It was noted the flaring continued for 10 to 35 minutes. During this time, large quantities of incompletely burned hydrocarbons were emitted to the atmosphere. The procedure should be changed, as a minimum to have the flare watcher start the steam flow before calling the units. A better solution would be to activate an alarm at the unit operator's area and have the operator start the steam flow. An automatic system should be installed.

The plant has no data relative to the nitrogen oxide or carbon monoxide emissions from the fired heaters. The refinery does not have a power plant. Steam is provided from a nearby national power plant. It appeared that many of the fired heaters were not balanced properly. None of the units had any automatic combustion air control. A stack gas analyzer is a recommended addition to the refinery and a survey should be conducted to determine the amount of nitrogen oxide and carbon monoxide emissions. The heaters with the greatest emissions should be adjusted and monitored frequently until automatic controls can be provided.

2. MEDIUM AND LONG TERM OPPORTUNITIES

Nitrogen oxides

Plans should be prepared to install low nitrogen oxide burners with automatic combustion air control. On some units it might be appropriate to install flue gas recycling to further reduce the nitrogen oxide level. The national power plant adjacent to the refinery was not visited and is outside of this scope of work.

Sulfur dioxide

The refinery was originally designed to process Romanian crude oil having a sulfur content between 0.3 and 0.5 weight percent. With this low amount of sulfur release, the plant installed a sodium hydroxide scrubbing unit. The by-product of this system, sodium sulfide, is sold to a local paper mill. The hydrogen sulfide scrubbed from the fuel gas by the amine system is stripped and then flared. The hydrogen sulfide scrubbed from the water stream is also flared. The flared hydrogen sulfide is burned to sulfur dioxide. If the sulfur content is 0.5 weight percent and the crude throughput is 3 million tonnes per year the amount of sulfur that would arrive at the refinery would be 15 000 tonnes per year. Based upon the estimated sulfur balance, the amount of sulfur dioxide emitted to the atmosphere is 10 800 tonnes per year. (See Section I, page 1).

This level of emission is economically recovered with a Claus unit. This unit could recover approximately 5 000 tonnes per year of sulfur. If importation of the various sour crudes currently available continues or is increased and further desulfurizing of the refinery products is required, the amount of sulfur available for recovery would also increase. For example, if the average sulfur content of the crude increases from 0.5 to 1.5 weight percent and fifty percent of the sulfur remains in the product, then 22 500 tonnes of sulfur per year could potentially be recovered.

The medium term effort for sulfur control should be directed at revamping the amine scrubbing/stripping system for the gas system and the water air stripper for the water stream. Flaring of the hydrogen sulfide could continue until the sulfur recovery unit is built as part of the long term opportunities.

API separator

The multi-compartment oil/water separators were installed to have oil skimming and sludge removal done through the use of a traveling bridge mechanism. The intent is to scrape sludge while traveling toward the inlet end and skim oil while traveling toward the tank outlet.

Various design and installation deficiencies became apparent during start-up. It was reported that the bridge would "jump the track." The track was installed in an irregular fashion and constructed of scrap-type material. The existing rail and wheels should be replaced. The rail should have flanges to allow for an idler wheel to be below the riding level. This would prevent the trailing wheels from lifting off the rail when a load is executed on either the oil or sludge skimmer.

To prevent the traveling bridge trolley from cantering, the trolley should be supplied with horizontal wheels tracking on the side of the trolley rail. Also both ends of the bridge trolley should be equipped with a rack and gear drive. These two additions will allow the trolley to remain on track and parallel to the bridge rail.

The bottom of the separator was reported to be very uneven. To correct this problem, the sludge plow should be set above the concrete high point. The space between the plow and the rough floor can be filled with grout. This is standard practice whether the tank is circular or rectangular.

Dissolved air floatation unit (DAF)

The DAF units need significant upgrading to perform effectively. It was reported that the lime slack and pH control system is functioning. The ferrous sulfate system did not appear to be operating. This system, with sufficient chemicals must be made operable and controllable.

The flocculation tank provides dissolved oxygen that is used to oxidize the ferrous form to the ferric form which combines with the hydroxide ions supplied by the lime feed. This allows ferric hydroxide to form. The ferric hydroxide is the flocculent that helps to remove the dispersed oil droplets.

The compressed air manifold near the bottom of the flocculation tank needs repairing. It was noted in the drained tank, that the air manifold was installed at the circumference of the rectangular tank. The pipe had numerous small nozzles to distribute the air. In the operating tank the air distribution was poor with large bubbles breaking the surface at a few places. This type of air bubble pattern is inefficient for dissolving the oxygen needed for oxidizing the ferrous to ferric ions.

It is recommended that air dispersion tubes be installed at each of the nozzle locations to allow for the generation of numerous very small bubbles. An acceptable alternate is to install a moderate speed chemical mixing turbine about two feet from the bottom of the tank and release compressed air below, near the eye of the submerged turbine. Either system will increase the oxygen transfer and hence the chemical oxidation of the ferrous ion.

The DAF flotation/clarifier unit has an excess of accumulated sludge. The mechanism for collection of the sludge and the float were not operating during the audit. It could not be determined if they were not operable or if they were not operated because there was no place to pump the float or sludge.

Incinerator

The planned disposal system is the fluidized bed incinerator. The incinerator has been shut down due to the high energy operating costs and high temperature overload when burning the biological and/or oily sludge. Excessive wear of the ceramic spheres and the gunite incinerator lining were also reported. It is recommended that consideration be given to re-activating the fluid bed incinerator after accomplishing two design modifications.

First, determine what light weight fluidizing media could be used that would reduce the fluidizing pressure. This would allow for less energy for fluidizing and reduce the violence of the bed. Associated with replacing the fluidizing media, the thermo-insulation should be changed to an acid/salt resistant fire brick.

The second change is to provide batch tanks that would permit uniform mixing of the feedstock sludges. It was anticipated that the water treatment, waste activated sludges, and the oily sludge be disposed of as a mixture. This mixture must be thoroughly blended before being introduced into the incinerator mixed batch tank. Each batch tank should be sized to allow for an eight hour burn. The ash would be collected in the existing duel cyclones.

The heavy metals from the oily sludge should be removed by the cyclones. The excess lime from the water lime softening plant and the DAF float should prevent the heavy metals from exiting the incinerator in a leachable form. Regardless, the collected ash must be tested for heavy metal leachables before determining the ash disposal method.

The rotary kiln currently under construction may solve the problem of sludge disposal when it is completed and brought on stream. It is anticipated that significant maintenance problems will be present because the plans call for using castable liner instead of using acid/salt resistant fire brick.

Aeration Unit #3

The gear boxes for the twenty-eight fixed platform turbine aerators are currently failing as fast as they can be repaired. The vendor of the gear reducer is no longer manufacturing the gear box because of the poor design. Therefore the plant, in an attempt to keep them operation, is fabricating the replacement parts on-site. Because of reported more important needs, the fabrication shop can not keep up with the gear box failures. On the day of the audit, twenty-five of the twenty-eight were not operating.

Therefore the twenty-eight gear boxes should be replaced. It may not be possible to replace only the boxes and use the existing motors and turbine impellers. It may be necessary to procure complete aerator units. If this occurs, the stability of the concrete pedestal must be confirmed with the new aerators.

Biological clarifiers

The circular clarifiers for the biological units did not appear to be operating at their design capabilities. The rake mechanism was rotating, but the scum collection arm and floating sludge hopper and beach were not visible. The surface of the clarifier had a thick layer of floating oily sludge. It was indicated that the operator does not have any place to put the accumulated sludge, and it is left on the surface. This accumulation will prevent the plant from meeting the suspended solids or oil standards on a consistent basis.

The floating sludge must be removed. After removal, a determination must be made as to whether the scum arm and floating sludge hopper need to be repaired or replaced.

New rotary kiln

A new rotary kiln and sludge concentration system is under construction. If the installation could be expedited, it could help solve the excess sludge in the various clarifiers or separators. It is recommended that the plant consider reactivating the modified fluid bed as discussed earlier.

Aerated lagoon

Good engineering practice, when treating complex hydrocarbon by the biological activated sludge process, is to install large oxidation lagoons down stream from the final clarifier of the activated sludge unit. These lagoons should be large enough to hold three to five days of waste water flow. The lagoons should be designed to prevent ground water contamination. The use of the lagoons will correct for minor upsets of the activated sludge process and also give time for biological oxidation of the more complex hydrocarbon compounds. Also, depending upon the final water quality and the quality of the raw river water, it may be desirable to recycle a portion of the water.

Storm lagoon

Good engineering practice also calls for a storm water retention lagoon. This lagoon should be large enough to hold the first wash from the refinery drainage area during a 1/2 to 1 inch per hour rainfall. After the first flush, which should contain any free oil, the remaining water can be diverted to the receiving stream. The lagoon allows the free oil to be collected and the rain water released at a controlled rate. Many refineries make large storm water lagoons and use this water as process water. Space limitations dictate the size of lagoon to be installed.

3. FURTHER WORK REQUIRED

The following environmental improvement programs should be undertaken to assess additional impacts upon on-going clean-up and additional control systems required.

- Establish a program of emission inventory from each process block:

  . air emissions
  . water use and waste
  . solid waste generated

- Determine what process units or process changes can be made to reduce loss of product

- Initiate a hydrocarbon emission survey of all vents and stacks
- Establish a local meteorological station and at least three air monitoring stations
- Investigate sludge blending to allow reactivating the existing fluid bed incinerator without the high energy use
- Investigate the location and extent of soil contamination with the intent of removing the source of ground water contamination
- Investigate the use of the water softening sludge for agricultural use

K. ENVIRONMENTAL EMISSIONS REDUCTIONS

1. IMMEDIATE OPPORTUNITIES

Description	Cost	Pay-Off
Portable volatile organic analyzer to allow the plant to identify areas and equipment of excess product loss. The data accumulation from a volatile organic chemical survey of the entire refinery will allow for a logical plan for reduction by replacing seals, stopping leaks and solid clean-up.	$10 000	The savings will be in the reduced amount of product loss as the various losses are corrected.

K. ENVIRONMENTAL EMISSIONS REDUCTIONS

1. IMMEDIATE OPPORTUNITIES

Description	Cost	Pay-Off
Portable instrument to allow for measuring stack gas NO_x, SO_x, CO and CO_2.	$12 000	Allow for the adjustment of the various heater air/fuel ratios to maximize the heat release and balance the NO_x/CO release.

K. ENVIRONMENTAL EMISSIONS REDUCTIONS

2. MEDIUM TERM OPPORTUNITIES

Description	Cost	Pay-Off
Cover DAF - Flocculation Tank and two circular clarifiers. Flocculation Unit 2 - Circular Clarifier Condenser Unit The timing of this investment would be determined by the volatile organic emission study.	$ 9 000 88 300 25 000 122 300	Reduce the amount of volatile organic material lost to the atmosphere. Estimated VOC saved - 760 tonnes per year. Equating the VOC saved to a fuel value of 60% of crude cost, savings would amount to about $47 120 per year

K. ENVIRONMENTAL EMISSIONS REDUCTIONS

2. MEDIUM TERM OPPORTUNITIES

Description	Cost	Pay-Off
Cover for Refinery API Separators. The separators have traveling bridge need a cover. Also need a refrigerated condenser. 2 - Buildings, Prefab Vapor Condensers, 2, Refrigerated	$68 000 30 000 $98 000	Recover 7 600 tonnes per year of hydrocarbon.

K. ENVIRONMENTAL EMISSIONS REDUCTIONS

2. MEDIUM TERM OPPORTUNITIES

Description	Cost	Pay-Off
There is no down stream protection for the waste water treatment plant upset. install a 2 to 5 day aerated lagoon for safety factor. Flow-High = 95,000 cubic meters per day Provide a 285,000 cubic meter lagoon, 3 meters deep Earth work 2 Floating Aeration 50 Hp Electricai - 100 Hp	$373 000 100 000 10 000 $483 000	Provide stream protection in case of waste water treatment plant by-pass or overload. The lagoon will provide polishing of the effluent when the waste water treatment plant is operating properly.

K. ENVIRONMENTAL EMISSIONS REDUCTIONS

2. MEDIUM TERM OPPORTUNITIES

Description	Cost	Pay-Off
Revamp two secondary clarifiers for the activated sludge unit.		Improved separation of both oil and activated sludge to allow the plant to meet the local discharge standards.
Complete Revamp:		
Clean Floors allow	$ 5 000	
New Gear Boxes 15 000 each	30 000	
New Grout Floor 2" average	48 000	
New Rake Plows 2	6 000	
New Scum Board 2	2 000	
New Scum Pumps 2	6 000	
	$ 97 000	
Partial Revamp:		
Clean Floor	$ 2 500	
New Floor	24 000	
New Rake Plow 1	3 000	
New Scum Board 1	1 000	
New Scum Pump	3 000	
	33 500	
	$130 500	

K. ENVIRONMENTAL EMISSIONS REDUCTIONS

2. MEDIUM TERM OPPORTUNITIES

Description	Cost	Pay-Off
The Dissolved Air Flotation Unit is not operable per the design and needs revamp.		Recover additional free oil from float heat tank. Reduce oil load to the activated sludge unit.
Aeration/Flocculation Tank allow	$ 6 400	
DAF Blower and Recycle Pumps allow	10 000	
DAF Clarifier Unit revamp	5 000	
Revamp Gear Box	2 000	
New Flights	6 000	
Revamp Pumps - Sludge and Float allow		
Revamp Float Heat Tank allow	4 000	
	$33 400	

K. ENVIRONMENTAL EMISSIONS REDUCTIONS

2. MEDIUM TERM OPPORTUNITIES

Description	Cost	Pay-Off
Re-activate API sludge and scum traveling bridge scrapper units with new scum and sludge pumps - four tanks with two traveling bridges.		Recover more oil. Eliminate annual pump-out prevent excess oil flowing to the DAF units.
Check and repair electric allow	$10 000	
Clean tank bottoms allow	5 000	
Re-grade floors grout	2 500	
New Bridge Rails 6 units	6 000	
New Scraper flights	1 200	
4 - Sludge pumps	12 000	
4 - Scum pumps	$52 700	

K. ENVIRONMENTAL EMISSIONS REDUCTIONS

3. LONG TERM OPPORTUNITIES

Description	Cost	Pay-Off
Tank vent condensers and soil clean-up. This activity should follow the plant survey with the portable volatile organic analyzer. The survey will identify which tanks need condensers and what soiled areas need cleaned-up. Order of Magnitude estimate Tank Vents Soil Clean Up	 $ 5 000 000 10 000 000 $15 000 000	Prevent the loss of VOC through the storage tanks. Remove the source of additional ground water contamination.

K. ENVIRONMENTAL EMISSIONS REDUCTIONS

3. LONG TERM OPPORTUNITIES

Description	Cost	Pay-Off
Replace 40 bridge mounted turbine aerators. 40 Units @ $30 000 The activated sludge aeration basins have a total of sixty-six turbine aerators. Forty of these units are of a local manufacture and break down frequently.	$1 200 000	Provide proper amount of aeration for the activated sludge treatment with and allow the plant to meet the discharge standards.

K. ENVIRONMENTAL EMISSIONS REDUCTIONS

3. LONG TERM OPPORTUNITIES

Description	Cost	Pay-Off
Mix, excavate, blend and stabilize 25 000 cubic meters of hazardous waste oily sludge.		Remove the hazardous sludge from the potential of ground water contamination.
Mobilize Contractor	$ 100 000	
Stabilize Sludge @ $97/m^3	4 995 000	The empty lagoon could be divided and used as a surge lagoon for the new incinerator and for cash disposal.
Prepare Secure Site	33 000	
Cover Stabilized Sludge and provide ground water sample wells	20 000	
	$5 448 000	Both would require a clay liner in the basins.

K. ENVIRONMENTAL EMISSIONS REDUCTIONS

3. LONG TERM OPPORTUNITIES

Description	Cost	Pay-Off
Re-activate the fuel gas amine system, the sour water stripper duct to the claus unit, and the claus unit. To determine the capital cost will require a detailed evaluation of the existing conditions. Study Costs Magnitude Cost of Revamp Sulfur System Mobilize Contractor Stabilize Sludge @ $97/m^3 Prepare Secure Site Cover Stabilized Sludge and provide ground water sample wells	 $25 000 $5 to $10 000 000	Recover approximately 6 000 tonnes of sulfur per year. Remove approximately 12 000 tonnes of sulfur dioxide from local air.

APPENDIX A EXCERPT FROM CHARACTERIZATION REPORT

5. PETROBRAZI S.A. - PLOIESTI, ROMANIA

Address: Petrobrazi S.A.
2011 Brazi Prahova District
Ploiesti, Romania

Telephone: 971 4.3121
Telex: 1: 343
Telefax: 971 26626

Contact: Titus Alexandrescu
Technical Manager

5.1. Summary Description of Refinery

Petrobrazi is a company that operates in the petroleum processing and petrochemical industries. All capital belongs to the Romanian state and could be transferred to the private sector under provisions of the privatization law.

The Petrobrazi refinery, located 12 kilometers southwest of Ploiesti City, is an integrated refinery and petrochemical complex. The Petrobrazi complex has three hydrocarbon processing divisions: petroleum refining, petrochemical processing, and synthetic rubber processing. See Map Figure 1.

The first process units were built at the beginning of the 20th century. The refinery was severely damaged during World War II. In the early 1960s the old units were replaced by new ones.

The crude processing activity is divided into two streams. The first line has an overall capacity of approximately 4 million tonnes/y. It was built in 1961 with successive revamps until 1970. The first line is able to run with low sulfur crude oils. The second line, with an overall capacity of 3.5 million tonnes per year, began operation in 1988 and 1989 and is able to process imported sulfurous crude oils.

The Petrobrazi refinery has the capacity to process 7.5 million tonnes of crude oil per year. In addition to hydrocarbon processing, the refinery has off-site facilities, utilities production capabilities, maintenance and repair shops, blending and storage facilities, laboratories, waste water treatment systems, a crude oil and distilled commercial products piping network, and railroad loading and unloading racks.

The refinery is structured to produce many types of fuels, gasoline, jet fuel, diesel, fuel oils, aromatics C6-C8, feed stocks for black carbon and needle coke, domestic consumption LPG, and delayed coke. Table C.5.1.1 is a list of the process units.

TABLE C.5.1.1 - PROCESS UNITS

No.	Name of the Unit	Capacity Tonnes/Year (Feed)	Licensor	Designer	Year Constructed Remarks
	A. 1st Line				
1	Atmospheric & Vacuum Distillation #1	4 000 000	ICERP	IPIP	1963. Desalting included low sulphur crude.
2	Naphtha Hydrotreater and Splitter #1	1 100 000	Hydrocarbon Research	IPIP	1961
3	Light Naphtha Cat. Reformer	475 000	Hydrocarbon Research	IPIP	1962
4	Heavy Naphtha Cat. Reformer	570 000			
5	Aromatics Extraction	200 000	Hydrocarbon Research		1961
6	Gas Absorption - Fractionation Unit #1	220 000	ICERP	IPIP	
7	Ortho-Xylene Fractionator		Hydrocarbon Research	IPIP	
8	BTX Fractionator #1	80 000	Hydrocarbon Research	IPIP	
9	Ethylbenzene Fractionation #1	25 000	Hydrocarbon Research	IPIP	
10	Diesel Hydrotreater	800 000			
11	Heavy Platformate Splitter	500 000	ICERP	IPIP	
12	Aromatic Extraction #2	200 000		IPIP	
13	Toluene - Xylene Splitter	145 000	ICERP	IPIP	1974
14	Paraxylene Crystallization	135 000	KRUPP		1974
15	Ethylbenzene Fractionator #1	67 000		IPIP	
16	Ortho-xylene Fractionator #2	17 000		IPIP	
17	Metaxylene Isomerization #1	145 000		IPIP	
18	Paraxylene Separation PAREX #1	64 000	UOP	IPIP	1974
19	Fluid Catalytic Cracking Gas Fractionation, LPG Merox	1 100 000	UOP	IPIP	1967

TABLE C.5.1.1 - PROCESS UNITS (Cont.)

No.	Name of the Unit	Capacity Tonnes/Year (Feed)	Licensor	Designer	Year Constructed Remarks
20	Furfural Extraction	250 000	ICERP	IPIP	1974. To produce aromatic concentrates, feedstock for carbon block.
21	Coking #1	550 000	ICERP	IPIP	1964. Low Sulphur Feedstock
22	Coking #2	550 000	ICERP	IPIP	1970. Low Sulphur Feedstock
23	Gas Absorption Fractionation #2	440 000			
24	N-Pentane Isomerization	220 000	USSR	USSR	
	B. 2nd Line				
25	Atmospheric & Vacuum Distillation #2 & LPG Sweetening	3 500 000	ICERP	IPIP	Desalting included. High sulphur crude. 1987.
26	Gas Absorption Fractionation #3, LPG Sweetening Included	78 000	ICERP	IPIP	
27	Naphthe Hydrotreater & Splitter #2	770 000	ICERP	IPIP	1988
28	Jet Fuel Hydrotreater	350 000	ICERP	IPIP	1988
29	Kerosene & Diesel Hydrotreater	720 000	ICERP	IPIP	1988
30	Catalytic Reforming (Platforms)	800 000	UOP	IPIP	1988
31	Ethylbenzene - Ortho-xylene Separation	105 000	ICERP	IPIP	
32	Gas Fractionation	250 000	ICERP	IPIP	
33	Aromatic Extraction #3	440 000	ICERP	IPIP	1988
34	BTK Fractionator #2	200 000	ICERP	IPIP	
35	Metaxylene Isomerization #2	285 000	ICERP	IPIP	
36	Paraxylene Separation Parex #2	340 000	UOP	IPIP	
37	Coking #3 Delayed	820 000	ICERP	IPIP	High Sulphur Feedstock. 1990.
38	Fuel Gas Amine Treating and Sulphur Recovery	70 000	KLAUS	IPIP	1988
39	Fuel Gas Amine Treating and Sulphur Recovery	90 000			

The crude processing scheme has a competitive complexity characterized by a high proportion of secondary and catalytic processes, comparable to advanced refineries in other countries. The feedstock is primarily crude, however, other petroleum products are processed as straight run naphtha, reformed gasoline, natural gasoline from oil fields, propane, propylene, and aromatics.

The overall material balance for 1990 is presented in Table C.5.1.2, which also gives information on the design provisions for some feedstocks and products quantities. Figure No. 7 shows the Block Flow Diagram for the refinery. Table C.5.9.1 lists the product specifications.

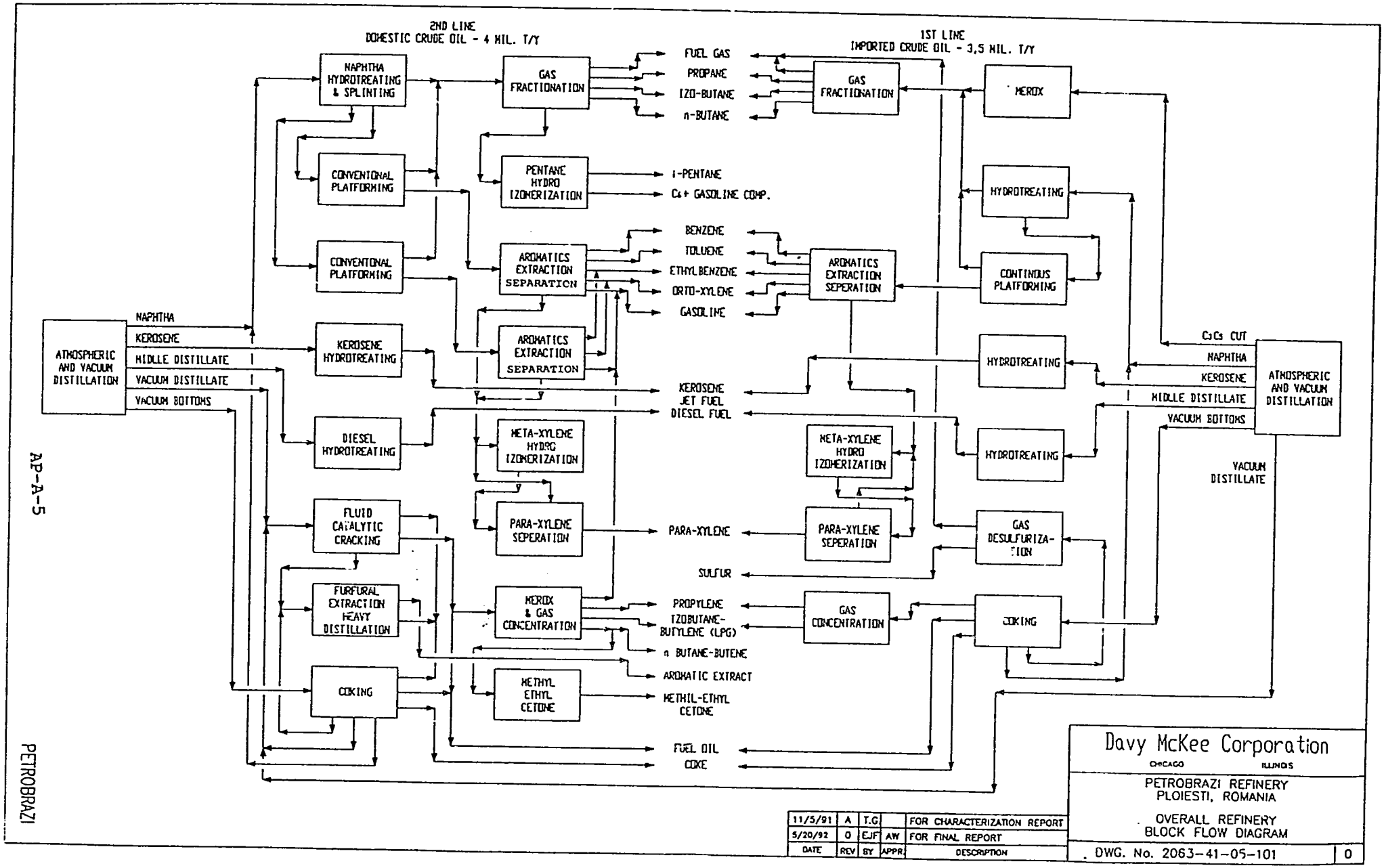
2ND LINE
DOMESTIC CRUDE OIL - 4 MIL. T/Y
1ST LINE
IMPORTED CRUDE OIL - 3,5 MIL. T/Y
ATMOSPHERIC AND VACUUM DISTILLATION
NAPHTHA
KEROSENE
MIDDLE DISTILLATE
VACUUM DISTILLATE
VACUUM BOTTOMS
NAPHTHA HYDROTREATING & SPLINTING
CONVENTIONAL PLATFORMING
CONVENTIONAL PLATFORMING
KEROSENE HYDROTREATING
DIESEL HYDROTREATING
FLUID CATALYTIC CRACKING
FURFURAL EXTRACTION HEAVY DISTILLATION
COKING
GAS FRACTIONATION
PENTANE HYDRO IZOMERIZATION
AROMATICS EXTRACTION SEPARATION
AROMATICS EXTRACTION SEPARATION
META-XYLENE HYDRO IZOMERIZATION
PARA-XYLENE SEPERATION
MEROX & GAS CONCENTRATION
METHYL ETHYL CETONE
FUEL GAS
PROPANE
IZO-BUTANE
n-BUTANE
I-PENTANE
C6+ GASOLINE COMP.
BENZENE
TOLUENE
ETHYLBENZENE
ORTO-XYLENE
GASOLINE
KEROSENE
JET FUEL
DIESEL FUEL
PARA-XYLENE
SULFUR
PROPYLENE
IZOBUTANE-BUTYLENE (LPG)
n BUTANE-BUTENE
AROMATIC EXTRACT
METHIL-ETHYL CETONE
FUEL OIL
COKE
GAS FRACTIONATION
AROMATICS EXTRACTION SEPERATION
META-XYLENE HYDRO IZOMERIZATION
PARA-XYLENE SEPERATION
GAS CONCENTRATION
MEROX
HYDROTREATING
CONTINOUS PLATFORMING
HYDROTREATING
HYDROTREATING
GAS DESULFURIZA-TION
COKING
C3C5 CUT
NAPHTHA
KEROSENE
MIDDLE DISTILLATE
VACUUM BOTTOMS
ATMOSPHERIC AND VACUUM DISTILLATION
VACUUM DISTILLATE
Davy McKee Corporation
CHICAGO ILLINOIS
PETROBRAZI REFINERY
PLOIESTI, ROMANIA
OVERALL REFINERY
BLOCK FLOW DIAGRAM
DWG. No. 2063-41-05-101
0
DATE REV BY APPR DESCRIPTION
11/5/91 A T.G FOR CHARACTERIZATION REPORT
5/20/92 0 EJF AW FOR FINAL REPORT
AP-A-5
PETROBRAZI

FIGURE 7

TABLE C.5.1.2 - MATERIAL BALANCE 1990

Inputs	1990 (tonnes/y)	Design (tonnes/y)
Imported crude oil	1 240 000	3 500 000
Domestic crude oil	3 182 500	4 000 000
Transfer naphtha for cat. ref	482 500	N.A.
Transfer HDT naphtha	13 500	200 000
Stabilized natural gaso.	67 400	NA
Coker gas from Ploiesti Reforming	6 800	NA
C5-C6 transfer cut	26 800	NA
Unstabilized condensate from the field	10 100	NA
Transfer m-xylene	2 500	NA
Transfer Vac. Dist. (VGO) to FCC	12 600	NA
Total Inputs	5 038 700	-

TABLE C.5.1.2 - MATERIAL BALANCE 1990 - continued

Outputs	1990 (tonnes/y)	Design (tonnes/y)
Fuel gas	238 700	276 703
Ethane enriched gas	3 000	
Propane	19 100	112 823
Propylene	13 100	66 502
Iso-butane	11 000	
Domestic liquefied gas	57 300	88 000
N-butane	13 000	
Butane-butylene	6 700	
Benzene	22 500	
Toluene	48 900	
Ethyl-benzene	6 300	
Orto-xylene	17 600	
Para-xylene	17 700	
Naphtha	220 100	
Gasoline, regular	668 800	
Gasoline, premium	463 800	
Jet fuel	145 900	
Domestic use kerosene	174 000	
Gas oil -15°C	706 300	
Gas oil -5°C	156 400	
Liquid fuel	1 390 500	
Miscellaneous Products		
Aromatic extracts from heavy gas oils	43 000	100 000
Vacuum gas oil	221 600	
Sodium Naphthenate	3 000	
Petroleum coke	139 300	406 250
Coke on catalyst	71 100	80 000
Losses	160 000	
Total outputs	5 038 700	

Note: Processing losses - 118.8 thousands tonnes/y
Losses in mixing, conditioning and delivery field - 41.2 thousands tonnes/y
Total losses - 160.0 thousands tonnes/y

5.2. Utilities, Services, Offsites

Electricity generation and distribution

Electrical power is supplied from the National Electricity Supply Company power station in Brazi, at 35/6 kV for process units erected prior to 1975 and at 110/6 kV for units built after 1975. There are substations within the refinery with transformers. The refinery has no emergency power generation capability.

Steam generation and distribution

The same Brazi power station supplies steam through two thermal substations, one supplies the older refinery and one supplies the new refinery. The steam systems are interconnected between the two process lines. Steam is provided at three pressures, high, medium, and low pressure supplied at 3.1, 1.3, and 0.4 MPa respectively. Low pressure steam is produced from the condensate system. Secondary steam sources within the refinery are the CO and the CR2 waste heat boilers and steam generators.

Condensate system

The Petrobrazi refinery has four condensate collecting systems for the 3.1 and 1.3 MPa systems. Condensate recovery is used to produce a low pressure 0.4 MPa system. The condensate is pumped back to the Brazi thermal power station.

Fuel supply

Fuel gas is supplied by the refinery processes. There is a provision for receiving fuel from the national network during shutdowns. Excess refinery fuel gas is sent directly to the power station. Fuel oil is produced by the refinery. See Table C.5.9.1 The refinery process units are adapted for the use of fuel oil or gas or a combination of the two. Natural gas is high purity methane (more than 99.2 percent). The composition of the refinery fuel gas is shown in Table C.5.2.1.

Table C.5.2.1 - REFINERY FUEL GAS COMPOSITION

Component	Composition, vol%
H_2S	.5 - 1.9
CO	.33 - .45
CO_2	.44 - .5
O_2	.02 - .06
N_2	.25 - .3
H_2	6.2 - 7
C_1	22.1 - 30
$C_2 = + C_2$	12 - 16
C_3^1	3.2 - 9.0
C_3	10.1 - 12
$iC_4 + iC_4$	2.4 - 4.
$2\ C_4$	2.7 - 4.8
iC_4	2.6 - 3
nC_4	7 - 12.2
$iC_5 + nC_5 + C_5$	5 - 7.9
C_5+	5 - 13

Freshwater supply

Process water is supplied from Tirsor (21 wells), Tatarani-Teleajen (35 wells), Tinosu, Nedelea (Prahova River intake), and the Paltinu reservoir on the Doftana river. Capacities are 180, 350, 160, 160, 1 500, and 500 liters per second. Drinking water is supplied from Paltinu. Some of the listed wells can not be used due to underground water contamination with petroleum products.

Water treatment and distribution

Paltinu water for both drinking and process use is pretreated at the source. Nedelea River intake water is treated by coagulation, flocculation, and settling. Aluminum sulfate and KT_2 are used as treatment agents. Cooling tower water is treated in a softening unit (ion exchange). Boiler feed water for the CO boiler and waste heat recovery steam generators is softened on ion exchangers.

Cooling towers

Recycled water is used in the five cooling systems that serve groups of units. The towers are the hyperbolic type with natural draught. Induced draught type cooling towers are used in the recycled water system serving the atmospheric and vacuum distillation and coking units. Recycled cooling water is treated for corrosion protection, chlorinated, and treated with a biocide.

Crude oil receiving

Imported crude oil is transported via a 24 inch pipeline by ITTC, a crude pipeline company, from the port of Constanta. Domestic crude comes via four 8, 10, 12 and 14 inch pipelines. Two interconnected tank farms receive the crude. The total storage capacity for crude is 154 500 cubic meters, which is enough for one week of running at maximum throughput. Other feedstocks, like naphtha, gases, and gas oils, are sent via pipeline from other refineries located near Ploiesti. Appropriate storage facilities are also provided for chemicals and catalysts.

Product blending and shipment

Finished products are blended in tanks by recycling, using capstan and jet type mixers. They are shipped by railroad tank cars, using two groups of loading racks. Some revamping work will be done to improve the old LPG loading racks after the new racks, currently under construction, are completed.

Tank farm

Table C.5.9.2 in Section 5.9 summarizes the storage capacities for crude, intermediate, and finished products.

Flares, blowdowns and dropout system

Two flare systems exist in the Petrobrazi refinery. One is used for the first line of units, built before 1975, and the other is used for the new line, started up in 1989. The two flare systems are interconnected, with a total of seven headers (4+3). All headers are equipped with condensate separators, hydraulic sealing vessels, and flare stacks. Collected condensate is pumped to a slop vessel for reprocessing. Each system has a flare gas recovery facility consisting of a gas holder and a compressor station. Recovered gases are directed to the amine washing and sulfur recovery units joining the refinery fuel gas header.

Fire protection

According to the Romanian fire fighting regulations, 16 000 cubic meters of water are available for fire fighting and are stored in 2 x 5 000, 1 x 2 500 and 2 x 1 000 cubic meter tanks. Two pumping stations, equipped with electric and diesel engine driven pumps, ensure 1.4 MPa pressure in the network. Fire water monitors and hydrants are located in the process and tank farm areas. Five central and several local aero-mechanical foam stations, chemical foam stations, and half fixed units may be used to fight fires in the tank farm areas. Water sprinkling devices are provided to protect the equipment against ignition due to thermal radiation that may result from a nearby fire.

Inside all the process units, portable extinguishers are provided and major equipment is protected by steam curtains or fixed water spraying systems. Gas detectors, smoke detectors, high temperature sensors are used to alarm the fire fighting squad.

A communication system including telephone exchange, wireless telephones, and walkie-talkies may be used for fire alarm and fire fighting operations. The refinery has its own fire fighting squad. In case of a large fire, military fire fighting units stationed near the refinery, can offer support.

5.3. Chemicals and Catalysts Use

Tables C.5.3.1 and C.5.3.2 list chemicals and catalysts used in the refinery.

TABLE C.5.3.1 CHEMICALS

Name	Use
Diethyleneglicol (DEG)	Process
Polyglycol	Process
Monoethanolamine	Process
Ammonia	Process
Borax	Process
Trisodium phosphate	Process and water treatment
Caustic soda	Process
Sulfuric acid	Process
Sodium hydroxide	Process and water treatment
Hidrazine solution	Process and water treatment
Dichlorethane	Process
Aluminum sulphate	Water treatment
Polidurene	Corrosion inhibitor
Polidiazure	Corrosion inhibitor
Trisin	Corrosion inhibitor
Biocides ETA-FS, KDF	Water treatment
Sodium hypochlorite	Water treatment
Tetraethyl lead	Additive for gasolines
Hydrochloric acid	Water treatment
Furfural	Process
Kontol H-407,K-450, K1.30	Corrosion inhibitors
Topanol	Oxidation inhibitor - jet fuels

TABLE C.5.3.2 CATALYSTS

Application	Catalyst	Supplier
Hydrotreating	23 R-15	Vega S.A.
Xylenes isomerization	Zeolytic	Vega S.A.
Naphtha reforming	Polymetallic	Vega S.A.
FCC fluid catalytic cracking	Zeolite	UOP
Paraxylene separation	Parex molecular sieves	UOP

5.4. Previous 12-month operating history

In 1990, Petrobrazi processed less than 64 percent of its design throughput due to the shortage of both domestic and imported crudes. The crude supply problems had a negative effect on economic efficiency and process units operation.

5.4.1. Recent modifications

Since 1987 the refinery has commissioned the following new processing units: atmospheric and vacuum distillation, a platforming facility a xylenes complex, kerosene and gas oil hydrotreating, delayed coking, gas desulfurization and sulfur recovery.

5.4.2. Crude Oil Supply

The Petrobrazi refinery relies on various domestic and imported crude oils for its feedstock.

5.4.3. Operating Experiences

The refinery experienced shortages in the crude supply during the last 12 months and occasionally a lack of spare parts. These problems also caused some mechanical equipment failures and generated frequent shut downs of the process units.

5.4.4. Impact of Crude Oil Changes

Along with the sharp decrease in crude supply (primarily imported), there was a change in the crude pool. The proportion of Romanian low sulfur crudes went from a design of 54 percent to an actual throughput of 72% in 1990.

5.4.5. Impact of Product Market Changes

No significant product market changes occurred in the last 12 months, but there was a general decline in Romanian industrial production. Even though the crude supply dropped below the demand level, the market remained open. The product slate may be changed to adapt to the changing market, within the operating limitations of the process units.

5.4.6. Impact of Legislation and Social Changes

A gradual movement to free market practices will raise problems for management. These problems may require a reduction in personnel in order to achieve higher productivity rates and still be competitive in the market place. Provided it can find reliable partners, the refinery will probably be forced to look for more processing ventures, to get the hard currency needed to finance revamping projects and to import spare parts, catalysts, and chemicals.

5.5. Environmental Considerations

5.5.1. Quality of Local Environment

The Petrobrazi refinery is located within a complex that, in addition to petroleum refining, has petrochemical and synthetic rubber facilities. Volatile organic compound emissions and liquid product leaks have a significant polluting impact on the local environment. This is a concern because the refinery is near the residential areas of Ploiesti city and neighboring small towns.

5.5.2. Current Emissions Control

Gaseous effluents

The refinery operates two flare systems. Storage tanks within the refinery are primarily fixed roof, although there are some floating roof tanks in use. A vapor recovery system is not used for the fixed roof tanks. Flue gases are not treated. Gas desulfurization and sulfur recovery units are in operation. Benzene and other aromatics can temporarily exceed allowable concentrations within specific working areas.

Liquid effluents

Waste waters, which are discharged into the Prahova River, are monitored to meet government regulations by the Environmental Protection and Surveyance Agency for the complex. The tank farm area uses mechanical separators for rain water which is collected before it is discharged into the main sewage system. Industrial sewage and waste water is subject to mechanical separation and chemical and biological treatment prior to discharge. The waste water meets specifications and is discharged in the Prahova River at a maximum rate of 6 800 cubic meters per hour. The sewage system sustained some damage during the three strong earthquakes that have occurred since 1977. The quakes caused uncontrolled leaks from some tanks. This has subsequently caused intense pollution of the underground water table. See Table C.5.5.1 for waste water quality information.

TABLE C.5.2.1 - WASTE WATER QUALITY

Item (mg/l)	Actual (after Treatment)
TDS	Not determined
TSS	40
COD (mg O_2/l)	100
BOD (mg O_2/l)	25
TOC (mg O_2/l)	Not determined
Fe	Not determined
Phenol	0.5
NH_3	Not determined
pH	7.5-8.5
Oil/grease	18-26
Flow rate	---

Solid waste

All sludges that come from process unit cleaning, the API separators, waste water treatment, and tank cleaning are stored in pits. This results in serious soil and underground water table pollution problems. Incinerators for biological waste water sludge are not used due to their low reliability and high level of fuel consumption.

Sulfur management

Hydrogen sulfide is removed from the refinery fuel gas by amine absorption and is converted to sulfur. The light cuts are submitted to caustic and merox treatment. The naphtha, kero, and diesel cuts are submitted to hydrodesulfurization. Hydrogen sulfide rich process waters, from the FCC and gas desulfurization and sulfur recovery units, are stripped by inert gas and burned.

Due to frequent changes and the large number of processed crudes, a sulfur balance for the last 12 months of operation cannot be determined. Petrobrazi did not provide information about sulfur production in 1990.

Considering a 240 000 tonnes fuel gas production and consumption, including the power station, and an average content of 1.5 volume percent of hydrogen sulfide, it can be assumed that about 3 600 tonnes of sulfur are released into the atmosphere, as sulfur oxides. Approximately 1 000 tonnes of sulfur in gasolines, 2 000 tonnes in diesel fuels and 10 000 tonnes in fuel oils leave the refinery in liquid products. In total, about 11 000 tonnes sulfur is in the fuel gas and products.

Volatile organic compounds (VOC) management

Part of the flare gases are recompressed into the fuel gas header. The fixed roof tanks for liquid volatile products discharge vapors into the atmosphere. This results in important losses and air pollution.

Heavy metals management

There are no special process units for heavy metals removal. The FCC feedstock meet the specifications for heavy metals content, to protect catalyst activity. Most of the heavy metals go into the fuel oil.

5.6. Refinery Specific Potential and Opportunities for Improvement

The refinery has a revamping program for the main process units. This program is aimed to improve product quality and reduce energy consumption rates. In the atmospheric and vacuum distillation unit, the vacuum tower internals (valve trays) will be replaced by MELLAPAK structured packing trays.

Due to high levels of LHSV, the catalyst volume in the Catalytic Reforming Unit 2, will be increased by adding a new reactor. A study is underway to support a decision regarding constructing new continuous catalyst regeneration facilities.

Replacing the two old Sinclair Baker high pressure catalytic reforming units with a new low pressure, continuously regenerated catalyst unit is also being studied.

Regarding the FCC unit, an agreement was reached with the licensor (UOP) for improving the reactor and regenerator internals and installing a turboexpander to recover flue gas energy.

5.7. Refinery Specific Problems and Trends

The major problem of the refinery is the crude oil supply. Some of the negative consequences of the supply problem could probably be relieved by improved scheduling of the processing program in coordination with other Ploiesti area refineries that supply Petrobrazi, such as Astra and / or Petrotel. Better scheduling could help to reduce the number of shutdowns, save energy, and increase operating safety.

Losses at the refinery are high. The costs of improvements in crude receiving and product shipping measurements, reducing the amount of gas flared, and recovery volatile emissions compounds from the fixed roof tanks could be supported by the value of the recovered products. The hydrogen balance could be improved by recovering and using hydrogen obtained from pyrolysis and purge gases.

The performance of hydrogen sulfide amine absorption could be improved by supplying the needed amount of amines, since the Petrobrazi petrochemical plant is the main amines producer in the country.

Spare parts tend to be a problem for the refinery. Much of the equipment is supplied by different manufacturers, so that most spare parts cannot be used interchangeably. In addition, frequent equipment failures have resulted because of the poor quality of the spare parts supply and / or scarce performance of some conditioning units as desalters and amine desulfurizers.

5.8. Reference to Database

The information contained in the questionnaire has been formatted into a computerized data base, which is the subject of a separate report.

5.9. Supporting Plant Data

TABLES:

C.5.9.1 - PRODUCT SPECIFICATIONS - C3-C4 CUTS
C.5.9.2 - PRODUCT SPECIFICATIONS - GASOLINES AND NAPHTHA
C.5.9.3 - PRODUCT SPECIFICATIONS - JET FUELS
C.5.9.4 - PRODUCT SPECIFICATIONS - DIESEL FUELS
C.5.9.5 - PRODUCT SPECIFICATIONS - FUEL OILS
C.5.9.6 - PRODUCT SPECIFICATIONS - AROMATIC CONCENTRATE FOR CARBON BLOCK MANUFACTURING
C.5.9.7 - PRODUCT SPECIFICATIONS - COKE
C.5.9.8 - PRODUCT SPECIFICATIONS - AROMATIC HYDROCARBONS
C.5.9.9 - STORAGE CAPACITIES
C.5.9.10 - CRUDE OIL PROPERTIES

TABLE C.5.9.1 - PRODUCT SPECIFICATIONS - C3-C4 CUTS

Specifications	Propylene	Propane	i-Butane	n-Butane	Butane-Butylene Cut	LPG
Composition						
C_1 C_2 C_2^1 % Max	.5	5.0				
Propylene % Min.	90					
Propylene % Max.		2.0				
Propane % Min.	10.0	92.0				
Propane % Max.			7.0	.2 ($C_3+C_3^1$)	1.0 ($C_3+C_3^1$)	12.0 ($C_3+C_3^1$)
i-Butane % Min.			70			
i-Butane % Max.				4.0	3.0	
n-Butane % Min.				94.0	44 (n-Butenes)	87 (All)
n-Butane % Max.	1.0 ($n+iC_4$)	2.0 ($n+C_4$)	22			
C_6+ % Max.				1.0	1.0	1.0
O_2 ppm Max.	1.0					
CO_2 (+acetylene) % Max	.2		nil			
CO ppm Max.	5					
Sulfur Mercaptanes mg/Nm^3 Max.	40	100	100	100	100	200
Sulfur (Total) mg/Nm^3 Max.		.05				
Vapor Pres Bar Max at						
20 °C						2
50 °C						7.5
70 °C						11.0
Water % max.		.05				

TABLE C.5.9.2 - PRODUCT SPECIFICATIONS - GASOLINES AND NAPHTHA

Specifications	RON 72	RON 90	RON 90-93	RON 98	Naphtha
Specific Gravity at 15 °C Max.		.755	.755	.770	.740
RON Min.		90	90	98	
MON Min.	70	80	80	88	
Lead Content gPb/l Max.		.013	.8	.4	.06
Distillation Temp °C Max. at IBP					35
10 Vol %	70	60	60	60	130
50 Vol %	125	120	120	420	140
90 Vol %	180	180	180	180	165
EBP	205	205	205	205	185
Reid Vapor Pressure mm HG Max in Summer	500	450	450	450	500
in Winter	600	550	550	550	
Induction Period (ASTM 525-80) Minutes Min.	400	400	400	400	
Sulfur Content % Max.	.15	.1	.1	.1	.03
Sulfur as Mercaptanes ppm Max.		15	20	15	100
Copper Strip Corrosion Test		1b	1b	1b	
Doctor Test (ASTM 484-96)	neg	neg	neg	neg	
Present Gums (ASTM 381-80) mg/100ml Max.	5				

TABLE C.5.9.3 - PRODUCT SPECIFICATIONS - JET FUELS

Specifications		I	II
Density at 20 °C		.795 Max.	.775-.885
Distillation Temp °C Max at	IBP	150	
	10 Vol %	175	204
	50 Vol %	225	232
	90 Vol %	270	
	98 Vol %	280	288
Viscosity Cst at	-40 °C	16 Max.	
	-34 °C		15 Min.
Freezing Point °C Max.		-60	-53
Flash Point °C Min. (Closed Cup)		30	30
Sulfur Content Wt % Max.		.1	1.0
Sulfur as Mercaptanes Wt % Max.			.001
Aromatic Hydrocarbons Content Vol % Max.		20	20
Smoke Point mm Min.		20	20
Gum mp/100ml Max.		6	6
Iodine Number g/100/g Max.		1.5	
Lower Heat Value Kcal/lg Min.		10 250	10 250

TABLE C.5.9.4 - PRODUCT SPECIFICATIONS - DIESEL FUELS

Specifications	Roman	LD	-35	-25	-15	-10	-5	+5
Density at 15 °C Max.	.865							
Distillation Vol % Min at 300 °C	48	55	48	48	48	48	48	48
360 °C	85	90	85	85	85	85	85	85
Viscosity at 20 °C Cst	2.5-12	2.5-12	2.5-12	2.5-12	2.5-12	2.5-12	2.5-12	2.5-12
Pour Point °C Max.	-15(w)	-15	-35	-25	-15	-10	-5	+5
Flash Point °C Max.	55	55	65	65	55	60	60	60
Sulfur Content % Max.	.5	.5	.5	.5	.5	.5	.5	.5
Con Carbon on 10% Residue % Max.	.35	.25	.40	.40	.40	.40	.45	.45
Ash Content % Max.	.01	.015	.015	.015	.015	.015	.015	.015
Water and Sediment	nil	nil	nil	nil	nil	nil	nil	nil
Copper Corrosion Test	neg	neg	neg	neg	neg	neg	neg	neg
Cetane Number Min.	45	45	40	40	45	45	45	45
Lower Heat Value KCAL/kg Min.	9 900	9 900	9 900	9 900	9 900	9 900	9 900	9900

TABLE C.5.9.5 - PRODUCT SPECIFICATIONS - FUEL OILS

Specifications	P	40/45	50/30	7025	40/42S	50/30S	72/42S	30/50 S
Density at 20 °C Max.	.83							
Vol % Distilled up to								
200 °C Min.	18							
300 °C Min.	98							
Viscosity Cst Max at								
20 °C	2.5							
50 °C		280	350	490	280	350	470	2 100
80 °C		63	70	84	63	70	84	385
100 °C								40
Flash Point °C Min.	38	90	90	90	90	90	90	100
Pour Point °C Max.		45	30	25	42	30	42	50
Sulfur % Max.	.1	1	1	1	3.3	3.3	3.3	3.3
Con Carbon % Max.	.05	14	14	14	14	14	14	25
Ash Content % Max.	.003	.5	.5	.5	.5	.5	.5	.5
Lower Hea. Value Kcal/l Min	10 000	9 500	9 200	9 200	9 400	9 300	9 200	9 200

TABLE C.5.9.6 - PRODUCT SPECIFICATIONS - AROMATIC CONCENTRATE FOR CARBON BLOCK MANUFACTURING

Specifications	Type A	Type B
Density at 20 °C Min.	1.0	.987
Viscosity at 50 °C Cst Min.	10.5	10.5
Aromatic Hydrocarbon Content % Min.	70	70
IBP °C Min.	300	300
Sulfur Content % Max.	.8	.8
Con Carbon % Max.	1.2	1.2
H_2 to C Ratio Max.	1.22	1.32

TABLE C.5.9.7 - PRODUCT SPECIFICATIONS - COKE

Specifications		Type I	Type II	Type III
Ash Content % Max.		.6	.6	.8
Sulfur Content % Max.		.8	1.2	1.4
Volatile Compounds % Max.		11	11	13
Moisture % Max.		2	2	2
Lower Heat Value KCAL/kg Min.		8 200	8 200	8 200
Particles Size mm %	More Than 10 Min.	50	50	50
	Less Than 10 Max.	50	50	50

TABLE C.5.9.8 - PRODUCT SPECIFICATIONS - AROMATIC HYDROCARBONS

Specifications	Benzene	Toluene	Ethylbenzene	O-Xylene	P-xylene
Density at 20 °C	.876-.880	.869-.875	.865-.875	.877-.880	.860-.866
Boiling Range °C	1 °C Containing 80.1 °C	1 °C Containing 110.6 °C	135.5-136.5	143.0-144.8	137.7-138.8
Crystallization Point °C	+5				
Bromine No. g/100g Max.	.3				
Sulfur Content ppm Max.	10	free	free		free
Nonaromatic Hydrocarbons % Max.		1.5	.3		free
Copper Corrosion Test		no trace			
Ethylbenzene % Min.			99.6		
Retractive Index N_D^{20}				1 500-1 506	
Paraxylene % max					99.2
Chlorinated organic compounds					free

TABLE C.5.9. - STORAGE CAPACITIES

Product	No. of Tanks	Storage Capacity m^3
Crude	10	154 500
Intermediate Cuts		
Virgin Naphtha	16	4 880
Kero	7	11 300
Diesel	16	25 100
FCC and Coking Gasolines	13	14 000
FCC and Coking Gasoils	22	39 200
VGO	7	49 000
Fuel Oils Components	10	30 550
BTX Aromatics	51	26 640
Finished Products		
Propane	2	2 000
Propylene	2	2 000
C_3-C_3^1 Cut	7	4 200
i-Butane	2	2 000
n-Butane	2	2 000
Benzene	8	4 400
Toluene	6	2 800
Ethylbenzene	5	2 120
Poraxylene	6	3 400
Orthoxylene	5	1 440
Metaxylene Mixed Xylenes	4	1 100
Naphtha	10	46 300
Octanic Gasolines	17	77 000
Jet Fuel	4	16 300
Kero	2	2 000
Diesel Fuels	12	58 000
Aromatic Feedstock for Carbon Block	4	1 200
Fuel Oils	8	55 000

TABLE C.5.9.10 - CRUDE OIL PROPERTIES

Specifications	Domestic Off-Shore	Domestic (average)	Imported Blend A	Imported Blend B
Gravity API	35.95	28.75	32.08	32.14
Sulfur Content %	0.3	0.5	0.2	0.4
Yields on crude, wt%				
Gasoline (C5-207°C)	19.5	18.0	19.3	19.2
Kero + lt gasoil (207-347)	37.2	29.2	29.2	28.1
VGO (34°-520°C)	3-.7	46.4	25.5	25.9

USAID

TERMS OF REFERENCE

DESCRIPTION/SPECIFICATIONS/WORK STATEMENT

Component #2: A PETROLEUM REFINERY EFFICIENCY IMPROVEMENT ENERGY CONSERVATION PROGRAM

1. BACKGROUND

The petroleum sectors of Bulgaria, Czechoslovakia, Poland, Romania, and Yugoslavia (as well as that of Hungary) are emerging from a 40-year period of centrally-planned crude supplies and centrally-controlled markets. Practically all of the petroleum refineries in these six countries were built, or modernized, during this period.

Among the five countries, it appears that Bulgaria has three separate refineries having an aggregate throughput of 300,000 B/D; Czechoslovakia has seven aggregating 455,000 B/D; Poland nine with an aggregate throughput of 385,000 B/D; Romania thirteen aggregating 617,000 B/D; and Yugoslavia seven with an aggregate capacity of 609,135 B/D. Now, these refineries face changing circumstances.

First, it is likely that the existing refineries were designed to process a narrow slate of crude oils supplied from the USSR. Now, crude supply options have broadened so that supplies can be bought on the world market through spot and contract purchases. The USSR appears to be phasing out as a primary crude supplier to these countries. Accordingly, potential future crude oil slates can have a much broader range of physical and chemical characteristics than has heretofore been the case.

Second, market conditions for the refinery product slates have been based on the principles of a centrally-planned national economy. Expectations, because of the shift to democratic pluralism in these countries, are for a higher standard of living for the populations, for a greater awareness of the need for environmental protection, and for shifts in refinery-product slates that will occur because of these. The capabilities of the mix of processing units in the refineries in each country to adjust simultaneously to changing crude slates and product slates will be brought into question.

Third, greater public awareness of preserving environmental quality and of the environmental deterioration that has occurred during the past forty years are likely to force major changes in refinery design and operating practices to reduce noxious gaseous, liquid, and solid waste emissions. This awareness is likely to emphasize production of unleaded gasolines and alcohol additives, and perhaps also the exploration of neat alcohol and compressed natural gas alternatives. At the same time, changes in refinery operations will be demanded to reduce noxious emissions to the extent practical.

Finally, tightened economic conditions will force refinery managements to improve operations through introducing more efficient internal utilization of energy and through implementing opportunities for energy conservation. These improvements will have to occur while anticipating changing crude and product conditions and with an inventory of processing units in the refineries that in all likelihood has a limited flexibility to adapt to changes. The roles for alternative fuels could emerge here also.

Compounding the problem of managing change are shortages of foreign exchange, increases in foreign exchange demands because of purchase of crude oil supplies on the open market at now greatly increased price levels, and demands on investment capital that will be generated by the political and economic changes in these countries. Foreign investment by international oil companies in petroleum-sector investment opportunities could bring needed foreign exchange and could potentially lead to new refinery construction at strategic locations and the scrapping of some existing refineries.

The complexity of the relationships within the petroleum sector system is somewhat illustrated in Figure 1 of this Appendix.

Obviously, managing the process of change will take some time. The inputs for analysis are not yet completely available. Economic benefits will depend on national policies, formed or as yet unformed. The current crude supply and pricing picture is an unstable one. Foreign investor interest in the five countries probably varies among the countries and perhaps is not yet well focused on the petroleum sector.

Nevertheless, a start in an analysis to improve the situation can be made provided the focus of initial efforts is on a rationalization of the petroleum-system situation in each of the five countries. Rationalization intends (a) efficient, effective, and environmentally-acceptable improvement in the production of petroleum products to serve current domestic markets, (b) adaptation of current operating practices to serve emerging domestic markets from expected, cost-attractive, crude-oil slates, and (c) identification of the improvements in terms of consistency with the privatization policies in each of the five countries.

2. GOAL AND OBJECTIVES

Accordingly, the generic goal of the work is to begin a process that ultimately can lead to such rationalization of the petroleum sectors in each of the five countries. The end results for the work at this time are

a. an organized data base comprising available data and information relevant to producing inputs for later use by others (when sufficient data and information for the

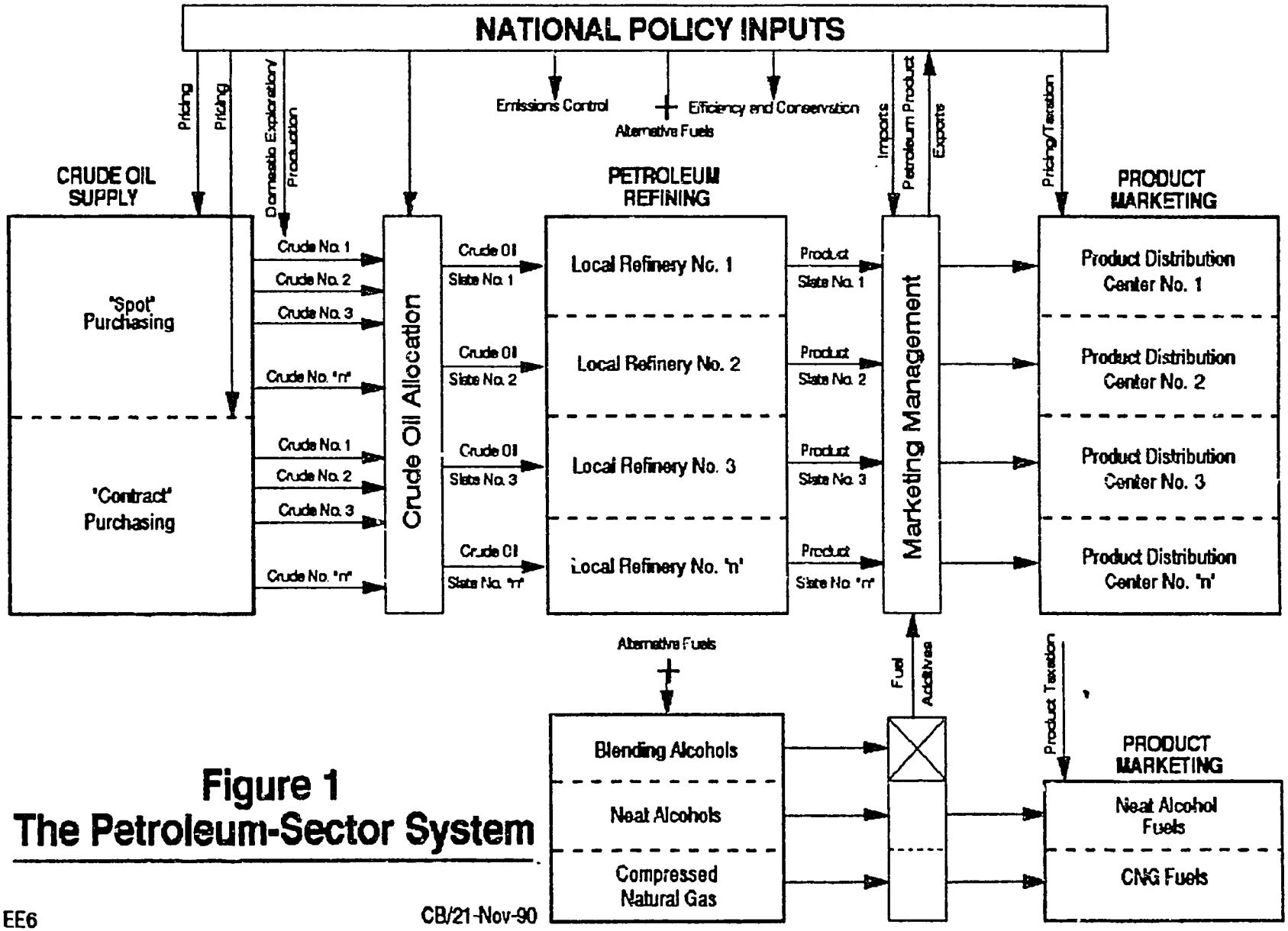

Figure 1
The Petroleum-Sector System

various components of the petroleum system, such as is shown in Figure 1, become available) in a commercial linear programming model to optimize the petroleum system in each country,

b. low-cost improvements in the energy efficiency and environmental impact of selected refineries producing the current product slates that have been implemented during the course of the Contractor's work, and

c. the identification of further improvements which can only be implemented at a later time by others through making a significant investment that needs to be justified.

Accordingly, the objectives of the work focus on the five countries and are

a. for the refinery sector in each country and to the extent that relevant information is available, to describe the process mix in each refinery, the technical capabilities, and current operating practices in a form that (1) provides a data base for undertaking further and future work by others aimed at optimizing the petroleum system in each country and (2) more specifically for the present, enables at least qualitative judgments to be made of effects of changing crude-oil slates on refinery product slates;

b. for a sample of two refineries each in Czechoslovakia, Poland, and Yugoslavia and one refinery each in Bulgaria and Romania, to identify changes in operating practices and low-cost modifications to equipment that can be immediately implemented to increase the efficiency of energy utilization, to conserve energy by avoiding unjustified use, and to reduce as far as practical undesirable gaseous, liquid, and solid effluents;

c. for the same refinery selection in each country, to identify, characterize, and recommend more-extensive changes in practices and equipment and modifications to the process units, which appear justifiable but at the same time require further study possibly with inputs that may not yet be available; and

d. to assist the management of each refinery selected in each country, as needed, in the implementation of the changes identified in b. above through on-the-spot assistance (including training sessions for refinery personnel).

3. APPROACH

This work statement is intended to be generic and applicable in each of the five countries. The intent is to undertake the work with two separate teams of specialized personnel operating in parallel. One team will undertake the work in three countries sequentially and the other in the two remaining countries sequentially. The two teams will be supported as appropriate by a home-office team. The work of the three teams will be coordinated by a program director.

In order to permit pragmatic planning for efficient accomplishment of the work, the first activity will be a reconnaisance in the five countries, probably lasting five weeks, during which needed technical and administrative inputs will be developed and needed local support arranged for. In order to gauge the effectiveness of the work, the final activity will be return visits to the five countries, probably over a two week period when the final reports have been submitted, for the purpose of discussing the results and answering questions that may arise.

The expectations are that considerable data and information will be collected for the countries and for the operating oil refineries. Also, expectations are that this data base, aside from the needs of the Contractor's work program and even after the completion of his work, can provide continuing inputs to other efforts aimed at improving operations in the non-refinery components of the petroleum-sector system (see Figure 1) or to follow-on efforts aimed at implementing the longer-term improvement opportunities identified in the work. Therefore, data and information collection is to be computer oriented with programs organized to be user-friendly and documented accordingly in the Contractor's final reports.

Furthermore, in the identification of improvement opportunities relevant to achieving the objectives of the work, expectations are that benefit/cost estimates will be prepared and/or evaluations performed as far as practical. Estimates and calculations will, with little doubt, require assumptions to fill in for a lack of data. Therefore, estimate preparation and evaluation of opportunities is also to be computer-oriented and user-friendly with programs designed to permit asking "what if" questions, with documentation incorporated in the Contractor's final reports.

Petroleum refineries and petrochemical manufacturing plants are closely linked both physically and through refinery products that become petrochemical feedstocks. The work shall be confined to petroleum refineries only. For this purpose the refinery shall be defined as comprising all

installations that pertain to the receipt of the crude oil through to processing and storage of the refinery's primary products. A primary product shall be defined as one that has been fully processed so as to be marketable. On-site facilities to blend different gasoline streams, produce, and process them to final specifications are refinery units. Refinery gas and/or liquid streams that are delivered to other units for further processing, such as to ethylene, ammonia, or aromatic extraction, are to be considered as finished products.

Equipment purchases (both for test work and for permanent installation) needed for the implementation of short-term improvements shall be defined and justified. A brief report shall be submitted for A.I.D. approval before committing to purchase.

4. TASKS

The following tasks are foreseen for the work.

a. Refinery Characterization

The work is technically oriented. It involves preparing for each refinery in each country, a block flow diagram showing the processing units and the support facilities between receipt of the crude oil slate and the dispatch of the product slate to market. The depth of detail for this characterization will provide

1) a description as far as practical of the capability of each processing unit in terms of feedstocks and feedstock variability and product yields and specifications; of the operating conditions, age, mechanical condition of the processing units; of the consumption of utilities (electricity, water, catalysts, chemicals, etc.); and of the quantities and characteristics of the effluents.

2) a description as far as practical of the support facilities in terms of crude and product storage capacity, fire protection and personnel safety provisions, and methods for segregation, collection, treatment, and disposal of solid, liquid, and gaseous effluents.

3) a written operating history of a refinery for the previous 12-month period emphasizing crude-oil receipts and specifications, product slates produced, unusual operating experiences, routine maintenance performed, and emergencies encountered during operations.

4) a description of the method of electricity supply, whether entirely purchased, self-generated, or a combination of both; and a technical description of the design and operation of the power house (if any) in terms of energy balance and heat rate.

b. Refinery Financial Structure

The objective in this task will be to collect data on local practices from the refinery management and/or from other appropriate sources that can be evaluated to establish the basis whereby the cost of each improvement opportunity can be pragmatically estimated and attractiveness of the opportunity determined. The expectation is that attractiveness will be based in part on (a) the magnitude of the capital requirement, including the foreign exchange component, and (b) the period of time within which the cost of the improvement can be recovered through savings in operating costs achieved. Attractiveness shall refer also to quantification (if practical) of benefits from reduced emissions of objectionable effluents. No need exists to relate emissions for compliance with any existing standards.

c. Selection of the Refineries

The refineries to be subjected to more detailed study, in order to meet Objectives b, c, and d above, shall be selected during the reconnaisance period by mutual agreement between the Contractor and the host-government agency concerned. For Contractor's guidance, the main criterion for selection should be based on achieving a maximum efficiency/environmental improvement impact for a minimum effort and cost in a minimum time frame. However, the selection shall be subject to A.I.D. concurrence.

d. Refinery Housekeeping

For each country and for each selected refinery, the work involves observation over a period of time of the refinery operations in order to detect opportunities to improve operating and maintenance practices, such as by

1) eliminating the presence of leaky valve-stems and steam traps,

2) incrementally insulating excessively hot surfaces,

3) avoiding poor combustion conditions (high oxygen content in chimney gases because of excessive excess air beyond combustion needs and/or leaky furnace settings),

4) avoiding excessive carbon monoxide in chimney gases (poor combustion, inadequate mixing of fuel and air),

5) increasing the frequency with which heat transfer surfaces are cleaned of fouling deposits,

6) reviewing whether rotating machinery is adequately maintained in terms of lubrication and condition of bearings, and

7) reviewing whether plant instrumentation is adequate and/or well-enough maintained to provide accurate readings of operating conditions and is appropriately configured to permit efficient operation.

e. Heat Conservation

The work involves observations over a period of time to evaluate the adequacy of provisions to recover heat that otherwise is wasted. The best example is a lack of airheaters to recover heat from hot chimney gases in refinery furnace equipment. Another example is the design of feedstock preheat heat exchanger trains and the opportunity to introduce an additional heat exchanger that can be justified now because of higher energy prices.

f. Process Unit Operating Conditions

The work involves analyzing the operating conditions and control systems installed for each processing unit in a selected refinery in order to determine whether these are appropriate for the products from the feedstock. This analysis can be particularly significant if current feedstocks and/or product slates have changed from the conditions on which the original design of the processing unit was based.

g. Refinery Energy Balance

The work involves analysis of the flows of energy among the different processing units comprising each selected refinery as well as within the processing units themselves in order to identify opportunities for energy-efficiency improvement in the short term and long term.

The analysis should attempt to provide a data base to assist others to foresee the longer term opportunities for a more efficient energy balance through review of the market demand, future crude oil supplies, and the design and applicability of the processing units themselves. Ultimately, the product of such analysis by others could be decisions to abandon certain units, modify others, or add new units, all providing for greater thermal efficiency.

Accordingly, the Contractor shall attempt to foresee as far as practical the prospect that such future analysis could invalidate the benefits perceived for an identified long-term opportunity from a presumption that a substantial remaining useful life for the process unit exists.

h. Fuel Switching

For each selected refinery, the work shall include comment and expert opinion on the practicality of replacing petroleum hydrocarbon fuels with indigenous coal. Refinery furnaces have in the past been fired with coal. Fuel switching to coal to save on oil imports could be a viable option. However, the Contractor shall focus on a different technical option for coal utilization, in order to reduce investment, by considering high fuel-density, coal/water slurry fuels as a direct replacement for fuel oil with minimum retrofit. Sootblowers could handle the higher ash content.

Consideration of such an option should be limited to assessing its practicality in terms of coal supply and characteristics, the state-of-the-art of fuel formulation, and adaptability to existing combustion equipment.

i. Refinery Emissions

For each selected refinery, the work involves preparing a survey of all solid, liquid, and gaseous refinery effluents in terms of sourcing, probable quantities, and chemical analyses, and suggesting practices to be employed in the refinery for control to reduce such emissions that reflect experiences elsewhere where emission control laws are in effect. There is no need to relate this task to showing compliance of emissions with standards that may be established by the World Bank or the U.S. Environmental Protection Agency.

j. Data Evaluation

The work involves computer-oriented organization of the data and information collected, evaluation of the data and information, compiling cost estimates, performing financial calculations, ranking opportunities in terms of the adopted criteria, and preparing final reports to meet the objectives of the work.

ABBREVIATIONS

°API	deg API (gravity of oil fractions, defined by API)
°C	degree Celsius
°F	degree Fahrenheit
%	per cent
/	per (e.g., tonnes/day)
A	ampere
ACFM	actual cubic feet per minute
AFBC	Atmospheric Fluidized Bed Combustion
API	American Petroleum Institute
ASTM	American Society of Testing Materials
BACT	best available control technology
BFW	boiler feed water
BOD	biological oxygen demand
BPCD	barrels per calendar day
BPSD	barrels per stream day
BS&W	Basic, Sediment and Water
BTX	benzene toluene xylene
Btu	British thermal units
C.F.	characterization factor
CCR	continuous catalyst regeneration
COD	chemical oxygen demand
CV	calorific value (heat of combustion)
DCS	distributed control system
DEA	Diethanolamine
EP	end point
EPA	Environmental Protection Agency (U.S.)
FBP	final boiling point
FCC	fluid catalytic cracking
FGD	flue gas desulfurization
FOE	fuel oil equivalent
G	giga(10^9)
GCV	gross calorific value
GJ	giga joules
HC	hydrocarbons
HDS	hydrodesulfurization
HP	high pressure
Hg	mercury
Hz	hertz

IBP	initial boiling point
IGT	Institute of Gas Technology
ISBL	inside battery limit
J	joule
KRW	Kellogg Rust Westinghouse
LHSV	Liquid Hourly Space Velocity
LP	linear programming/low pressure
Lube	Lubricating
M	mega(10^6)
MEA	Monoethanolamine
MEK	methyl ethyl ketone
MHC	mild hydrocracking
MON	motor octane number
MPa	Megapascal, a unit of pressure
MSW	municipal solid waste
MTBE	methyl tertiary butyl ether
MVA	mega volts ampere
MVAR	mega voltampere reactive
MW	mega watts
NAAQS	National Ambient Air Quality Standards
NCV	net calorific value
NO_x	Oxides of Nitrogen
NPDES	National Pollutant Discharge Elimination System
OSBL	outside battery limit
OVA	Organic Vapor Analyzer
PFBC	Pressurized Fluidized Bed Combustion
PONA	Paraffins, Olefins, Naphthanes and Aromatics
Pa	pascal, a unit of pressure
RCC	reduced crude conversion
RON	research octane number
RTD	Resistance Temperature Detector
RVP	Reid Vapor Pressure
S.R.	Straight Run
SCFD	standard cubic feet per day
SCFH	standard cubic feet per hour
SCFM	standard cubic feet per minute
SG	specific gravity
SO_x	Oxides of sulfur
SRC	solvent refined coal
T	tera (10^{12})
TBP	true boiling point
TDS	total dissolved solids
TEFC	totally enclosed fan cooled
TEL	tetraethyl lead
TOC	total organic carbon
TSS	Total Suspended Solids

UOP K	UOP Characterization Factor
V	volt
VOC	volatile organic compound
WWTP	wastewater treatment plant
WATSON K	Watson Characterization Factor
XP	explosion proof
atm	atmosphere or atmospheres
bar	bar
cP	centipoise
cSt	centistokes
cal	calorie
cm	centimeters
cps	cycles per second
day	day
ft^3	cubic feet
ft	feet or foot
g	gram
gal	gallons
gpm	gallons per minute
h	hour
hp	horse power
in	inch or inches
k	kilo
kA	kiloamperes
kPa	kilo pascal, a unit of pressure
kV	kilovolts
kWh	kilowatt hour
kcal	kilo calories
kcal	kilo calories
kg	kilogram
kg/cm^2	kilogram per square centimeter
lb	pound or pounds
liter	liter or litre
m	meter or metre
max.	maximum
mg	milligram
mi	mile
million	million(10^6)
min	minute
min.	minimum
mm	millimeters
mol	mole
n	normal
ohm	ohm
pH	pH, a measure of acidity or strength of a base.
percent	percent(or %)

phase	phase (electrical)
ppm	parts per million
ppmv	parts per million (volume)
ppmw	parts per million (weight)
ppb	parts per billion
psi	pounds per square inch
psia	pounds per square inch absolute
psig	pounds per square inch gauge
ptb	pounds per thousand barrels of oil
rpm	revolutions per minute
sec	seconds
tonne	metric ton
tonnes	metric tons
vol	volume
wt	weight
y	year

APPENDIX D

ECONOMIC ANALYSIS

Potential Value of Improvements in Crude Heat Exchange Train

Data:

- Design crude rate of 3.5 million tonnes per year
- Enthalpy change of 1°C approximately 0.625 kcal/kg
- Value of fuel oil $62 per tonne as of May 1991
- Assume fired heater efficiency of 80%
- Heating value of fuel oil at 9 500 kcal/kg

Calculation of potential savings in reduced fuel oil consumption due to improved heat exchanger efficiency or heat recovery.

$(3.5 \times 10^6$ tonnes/year) x (1000 kg/tonne) x (0.625 kcal/kg°C) x (kg/9 500 kcal) x ($62/1000 kg) x (1/0.80)

= $17 845 per degree centigrade per year

Potential Value of Improvements in Crude Heat Exchange Train

Data:

- Design crude rate of 7.5 million tonnes per year
- Enthalpy change of 1°C approximately 0.625 kcal/kg
- Value of fuel oil $62 per tonne in the spring of 1991
- Assume fired heater efficiency of 80%
- Heating value of fuel oil at 9 500 kcal/kg

Calculation of potential savings in reduced fuel oil consumption due to improved heat exchanger efficiency or heat recovery.

(7.5×10^6 tonnes/year) x (1000 kg/tonne) x (0.625 kcal/kg°C) x (kg/9 500 kcal) x ($62/1000 kg) x (1/0.80)

= $38 200 per degree centigrade per year

APPENDIX E

REFINERY ENERGY BALANCE AND "ENERGY DEMAND" CRITERIA

To properly undertake an appraisal of the energy efficiency of Eastern European refinery operations, it was apparent that some standard measure of the performance of typical modern US refinery installations was essential. A literature search revealed two documents describing typical energy consumptions in the US refining industry based upon surveys and energy audits as follows:

> R.V. Elshout, Barnard and Bunk Engineers and Constructors Inc., Pasadena, California, Hydrocarbon Processing, July 1982, Pg. 109.
>
> R.O. Pelham and R.D. Moriarty, Profimatics, Inc., Thousand Oaks, California, Hydrocarbon Processing, July 1985, Pg. 51.

The 1982 article lists typical utility requirements for a range of common refinery processing units, whereas the 1985 article analyzes the thermodynamic elements of energy usage for a typical 80 000 BPSD fuels refinery. These two references assessed US refinery energy performance from 1972 through the early 1980s. This is the period during which the US refining industry had recorded energy utilization improvements of about 25 percent.

By convention, the volume and English system of measurements (Barrels, API, BTU's, etc.) is still preferred by US refineries whereas mass and the metric or System International units (grams, metric tons, specific gravity, joules, kilocalories, etc.) are commonly used in Europe. Therefore, it is necessary to establish equivalent values between the two methods of measurement so that equitable comparisons can be made. The typical US refinery unit energy demands provided by Elshout have therefore been transformed from American to European practice as shown in the following Tables 1-3 by the provision of typical API gravities (where appropriate) for the unit feedstocks.

Direct and positive comparison of total energy demands between similar unit operations is still not possible; however, due to the individual refiner's selection of electric or motive steam for the provision of mechanical power and land also to the selection of cooling water or air as the sink for rejected heat. Consequently, suitable conversions to the basic fuel oil energy source were required and are shown in Table 4 in both the European and American usages. DMC believes that

its selected efficiency factors of 80 percent for steam generation; 35 percent for power generation; and 60 percent for combined pump with motor driver are reasonable or conservative in deriving the selected conversion to fuel oil equivalence to obtain a common, simple, and effective measure of total energy demand.

In a further attempt to extend and update the validity of these data, the most recent publication of refinery unit licensors' information (Refiner's Notebook - "Hydrocarbon Processing," November 1990) was selected to reflect technical and economic trends, together with other available information, to supplement lube oil energy demands. A consolidated listing of the results is shown in Tables AP-E.5 to AP-E.13.

Finally, Table AP-E.14 attempts a reconciliation of the "Unit Total Energy Requirements" chosen from the above-cited development and based upon Elshout, with the overall typical fuels refinery energy usage reported in the Profimatics survey. The predicted results of 378 455 BTU per barrel versus 380 000 BTU per barrel required by the "reasonably efficient fuels refinery" cited in the Profimatics example provides reasonable assurance for the general validity of the methodology even though it is claimed that improvements are continuing at the rate of 1 to 2 percent per year.

For convenience, Table AP-E.15 summarizes the "Refinery Unit Energy Demand Criteria" selected as best representing expected and obtainable refinery practice under current technical knowledge and economic pressures. These values were used for the overall assessment of the Eastern European energy efficiency of refinery operations.

In conclusion, it is well to recognize that in these selected energy demands, the potential for a further 15 to 20 percent reduction in energy usage could be technically/economically feasible by prudent retrofitting in existing plant but more likely in applying modern design techniques to future energy efficient installations where proper long term economic criteria are both encouraged and applied.

TABLE AP-E.1
USA
TYPICAL REFINERY UTILITY USAGE
****
PER 1 000 BPSD CAPACITY EXCEPT AS NOTED

	TYPICAL 'API	FUEL FIRED M BTU/H	18 °F dT CW GPM	POWER KWH/H	STEAM LB/H	SURFACE FT2
CRUDE	25.0	2500	375	10	333	1200
	40.0	3330	500	13	250	1000
VAC DISTILLATION	16.0	2100	410	15	1250	2000
VISBREAKER	9.0	8000	240	15	1250	
THERMAL CRACKER	9.0	20000	2000	31	1900	
DELAYED COKER	9.0	9120	830	50	1450	
FLUID COKER (1)	9.0	-250	830	175	-3300	
PROPANE DEASPHALTING	9.0	15200	1000	40	2100	
HYDROTREATING NAPHTHA(2)	45.0	2750	150	50	700	900
GAS OIL	25.0	3500	250	60	700	
CAT REFORMING (90 RON)	45.0	16000	550	150	1800	
CAT CRACKING FCC (3&4)	20.0	800	800	275	650	
TCC	20.0	2000	800	225	-650	
HYDROCRACKING (5)	20.0	8000	750	200	600	2100
CAT POLYMERIZATION	110.0		350	160	8000	
SULFUR PLANT (10 TPD S)		1500		45	-2800	
MEA UNIT (10 TPD S)			220	12.5	4200	
H2 PLANT(10 MM SCFD)(6&7)		200	200	1400	1800	

(1) INCLUDES AIR BLOWER FOR AVERAGE 15% PRODUCTION COKE BURNING
(2) COMPRESSOR POWER COULD BE SUPPLIED FROM ASSOCIATED CAT REFORMER
(3) POWER INCLUDES REGENERATOR BLOWER BUT NO CREDIT FOR LETDOWN TUR
(4) NO CREDIT FOR CO BOILER WASTE HEAT RECOVERY
(5) POWER EXCLUSIVE OF H2 MAKE-UP COMPRESSOR
(6) FUEL INCLUDES FEED - STEAM METHANE REFORMING
(7) POWER INCLUDES BOOSTER COMPRESSOR TO 1750 PSIG
(8) REF: HYDROCARBON PROCESSING JULY, 1982, PG 109

202

TABLE AP-E.2
USA
TYPICAL REFINERY UTILITY USAGE [1]
****
PER 1.0 BBL CAPCITY EXCEPT AS NOTED

	TYPICAL 'API	FUEL FIRED BTU	18 °F dT CW US GAL	POWER KWH	STEAM LB	EXCH SURFACE FT2
CRUDE DISTILLATION	25.0	60000	540	0.24	7.992	28.8
	40.0	79920	720	0.312	6	24.0
VAC DISTILLATION	16.0	50400	590.4	0.36	30	48.0
VISBREAKER	9.0	192000	345.6	0.36	30	
THERMAL CRACKER	9.0	430000	2880	0.744	45.6	
DELAYED COKER	9.0	218880	1195.2	1.2	34.8	
FLUID COKER [2]	9.0	-6000	1195.2	4.2	-79.2	
PROPANE DEASPHALTING	0.0	364800	1440	0.96	50.4	
HYDROTREATING NAPHTHA [3]	45.0	66000	216	1.2	16.8	21.6
GAS OIL	25.0	84000	360	1.44	16.8	
CAT REFORMING (90 RON)	45.0	384000	792	3.6	43.2	
CAT CRACKING FCC (4&5)	20.0	248846	1152	6.6	15.6	
TCC	20.0	277646	1152	5.4	-15.6	
HYDROCRACKING [6]	20.0	192000	1080	4.8	14.4	50.4
CAT POLYMERIZATION	110.0	0	504	3.8	192.0	
SULFUR PLANT (1.0 TONNE S)		3600000		108.0	-6720	
MEA UNIT (1.0 TONNE S)			31680	30.0	10080.0	
H2 PLANT (1000 SCF)(7&8)		480	28.8	3.4	4.3	

(1) REF: HYDROCARBON PROCESSING JULY, 1982, PG 109
(2) INCLUDES AIR BLOWER FOR AVERAGE 15% PRODUCTION COKE BURNING
(3) COMPRESSOR POWER COULD BE SUPPLIED FROM ASSOCIATED CAT REFORMER
(4) NOTE: POWER INCLUDES REGENERATOR BLOWER BUT NO CREDIT FOR LETDO
(5) NOTE: 5 W% COKE BURNING INCLUDED BUT NO CREDIT FOR CO BOILER WA
(6) POWER EXCLUSIVE OF H2 MAKE-UP COMPRESSOR
(7) FUEL INCLUDES FEED - STEAM METHANE REFORMING
(8) POWER INCLUDES BOOSTER COMPRESSOR TO 120 BARG

TABLE AP-E.3
USA
TYPICAL REFINERY UTILITY USAGE [1]
****
PER 1.0 TONNE CAPACITY EXCEPT AS NOTED

	TYPICAL SP GR	FUEL FIRED KCAL	10 °C dT CW M3	POWER KWH	EXCH STEAM KG	SURFACE m2
CRUDE DISTILLATION	0.9042	105264	14.2	1.67	25.3	18.6
	0.8251	153650	20.8	2.38	20.8	17.0
VAC DISTILLATION	0.9593	83337	14.6	2.36	89.4	29.3
VISBREAKER	1.0071	302407	8.2	2.25	85.1	
THERMAL CRACKER	1.0071	756017	27.2	33.77	-44.3	
DELAYED COKER	1.0071	344744	28.3	7.50	98.7	
FLUID COKER [2]	1.0071	-9450	28.3	26.26	-224.7	
PROPANE DEASPHALTING	1.0760	537768	31.9	5.62	133.8	
HYDROTREATING NAPHTHA [3]	0.8017	130588	6.4	9.43	59.9	15.8
GAS OIL	0.9042	147369	9.5	10.03	53.1	
CAT REFORMING (90 RON)	0.8017	759784	23.5	28.28	154.0	
CAT CRACKING FCC (4&5)	0.9340	422627	29.4	44.50	47.7	
TCC	0.9340	471539	29.4	36.41	-47.7	
HYDROCRACKING [6]	0.9340	326083	27.5	32.36	44.1	31.6
CAT POLYMERIZATION	0.5859		20.5	41.27	936.3	
SULFUR PLANT(1.0 TONNE S)		999295		119.02	-3360.0	
MEA UNIT (1.0 TONNE S)			132.0	33.06	5040.0	
H2 PLANT (1000 NM3)(7&8)		4038	3.6	112.22	65.5	

(1) REF: HYDROCARBON PROCESSING JULY, 1982, PG 109
(2) INCLUDES AIR BLOWER FOR AVERAGE 15% PRODUCTION COKE BURNING
(3) COMPRESSOR POWER COULD BE SUPPLIED FROM ASSOCIATED CAT REFORMER
(4) NOTE: POWER INCLUDES REGENERATOR BLOWER BUT NO CREDIT FOR LETDO
(5) NOTE: 5 W% COKE BURNING INCLUDED BUT NO CREDIT FOR CO BOILER WA
(6) POWER EXCLUSIVE OF H2 MAKE-UP COMPRESSOR
(7) FUEL INCLUDES FEED - STEAM METHANE REFORMING
(8) POWER INCLUDES BOOSTER COMPRESSOR TO 120 BARG

TABLE AP-E.4
USA
TYPICAL REFINERY UTILITY USAGE [1]
****
PER 1.0 TONNE CAPACITY EXCEPT AS NOTED

	TYPICAL SP GR	FUEL FIRED KCAL	10 °C dT CW KCAL	POWER KCAL	STEAM KCAL	TOTAL ENERGY KCAL/M.T	SAY USE TOTAL ENERGY MKCAL/M.T	SAY USE TOTAL ENERGY MBTU/Bbl
CRUDE DISTILLATION	0.9042	105264	8532	4012	17697	135505	135	77.2
	0.8251	153650	12467	5715	14545	186377	185	96.9
VAC DISTILLATION	0.9593	83337	8786	5672	62547	160341	160	97.0
VISBREAKER	1.0071	302407	4908	5402	59578	372296	370	236.4
THERMAL CRACKER	1.0071	756017	16341	81037	-30981	822415	820	522.2
DELAYED COKER	1.0071	344744	16951	18008	69111	448814	450	285.0
FLUID COKER [2]	1.0071	-9450	16951	63029	-157287	-86757	-85	-55.1
PROPANE DEASPHALTING	1.0760	537768	19118	13484	93680	664050	665	450.5
H'TREAT NAPHTHA [3]	0.8017	130588	3849	22623	4191	198972	200	100.6
GAS OIL	0.9042	147369	5688	24071	37163	214292	215	122.1
CAT REFORM (90 RON)	0.8017	759784	14113	67868	107775	949540	950	479.9
CAT CRACKING								
FCC (4&5)	0.9340	422627	17621	106800	33406	580454	580	341.8
TCC	0.9340	471539	17621	87382	-33406	543136	545	319.8
HYDROCRACKING [6]	0.9340	326083	16520	77673	30837	451112	450	265.6
CAT POLYMERIZATION	0.5859	0	12289	99052	655404	766745	765	283.2
SULFUR PLANT(1.0 TONNE S)		999295	0	285638	-2352000	-1067067	-1070	-1070
MEA UNIT (1.0 TONNE S)		0	79200	79344	3528000	3686544	3700	3700
H2 PLANT (1000 NM3)(7&8)		4038	2182	269331	45825	321377	320	320

(1) REF: HYDROCARBON PROCESSING JULY, 1982, PG 109
(2) INCLUDES AIR BLOWER FOR AVERAGE 15% PRODUCTION COKE BURNING
(3) COMPRESSOR POWER COULD BE SUPPLIED FROM ASSOCIATED CAT REFORMER
(4) NOTE: POWER INCLUDES REGENERATOR BLOWER BUT NO CREDIT FOR LETDO
(5) NOTE: 5 W% COKE BURNING INCLUDED BUT NO CREDIT FOR CO BOILER WA
(6) POWER EXCLUSIVE OF H2 MAKE-UP COMPRESSOR
(7) FUEL INCLUDES FEED - STEAM METHANE REFORMING
(8) POWER INCLUDES BOOSTER COMPRESSOR TO 120 BARG

ENERGY CONVERSION FACTORS TO FUEL OIL EQUIVALENTS::
CW, M3/H: USE 4.41*75/2284*0.6 = 0.24 KWH/H * 2400 = 579 KCAL - SAY 600 Kcal/m³ cw
STEAM, KG/H: USE 540 KCAL/KG @ 80% EFF = 675 KCAL/KG - SAY 700 Kcal/Kg STEAM
POWER, KWH: USE 860.5 KCAL/KWH @ 35 % EFF = 2459 KCAL - SAY 2400 Kcal/kWh

205

TABLE AP-E.5
USA
TYPICAL REFINERY UTILITY USAGE
****
PER 1.0 BBL CAPACITY EXCEPT AS NOTED

UNIT	REF HDBK 1990*	TYPICAL 'API	FUEL FIRED BTU	18 °F dT CW US GAL	POWER KWH	STEAM LB
CRUDE DISTILLATION	TECHNIP LO 4TWR	34.0	40000	68	1.10	6.0
	* TECHNIP HI 4TWR	34.0	60000	90	1.50	12.0
	H PROC JULY '82 Hy	25.0	60000	540	0.24	8.0
	H PROC JULY '82 Lt	40.0	79920	720	0.31	6.0
	GDANSK	32.0	20	0.60	24.0	
CRUDE/VAC DISTILLATION	FW LO RANGE	8.7	80000	20	0.60	24.0
	* FW HI RANGE	8.7	120000			
	PLOCK LO RANGE 1&2	32.5				
	PLOCK HI RANGE 3&4	32.5				
VAC DISTILLATIN	* SHELL - LUBES	22.0	590	0.36	30.0	
	H PROC JULY '82	16.0	50400			
	GDANSK	20.0				
VAC FLASHER						
LT ENDS FRACT'N (USE)						
LPG		130.0	260	0.30	40.0	
NAPHTHA SPLITTING		50.0	450	0.30	70.0	
H'TREATING - NAPHTHAS	H PROC JULY '82	45.0	66000	216	1.20	16.8
	GDANSK	45.0				
- GAS OILS	H PROC JULY '82	25.0	84000	360	1.44	16.8
	PLOCK	26.0				
	GDANSK	26.0				
- RESID	* IFP - RESID	15.0	52500	235	8.50	74.0
	* CHEVRON					
REFORMING	* CHEVRON + HT	48.0	285000	160	0.70	-40.0
	* ENGELHARD-100 RON	48.0	250000	40	2.00	
	* IFP -102 RON	48.0	65000		1.00	-12.5
	H PROC JULY '82	45.0	384000	792	3.60	43.2
	PLOCK + HT (AVG)	48.0				
	GDANSK	45.0				

TABLE AP-E.6
USA
TYPICAL REFINERY UTILITY USAGE
****
PER 1.0 BBL CAPACITY EXCEPT AS NOTED

UNIT	REF HDBK 1990	TYPICAL 'API	FUEL FIRED BTU	18 °F dT CW US GAL	POWER KWH	STEAM LB
FCCU	MW KELLOGG	20.0	229646	0	0.90	-100.0
	H PROC JULY '82	20.0	248846	1152	6.60	15.6
	PLOCK I	20.0				
	PLOCK II	20.0				
TCCU	H PROC JULY '82	20.0	277646	1152	5.40	-15.6
ALKYLATION - PRODUCT	STRATCO H2SO4	50.0		2050	13.50	180.0
	PLOCK	50.0				
OLIGOMERIZ'N - PRODUCT	MOBIL/BADGER	50.0		150	10.00	
	IFP	50.0		1315	1.90	54.0
CAT POLYMERIZATION	H PROC JULY '82	110.0		504	3.84	192.0
PROPANE DEASPHALTING	IFP	12.0	23750		1.40	7.0
	KERR-McGEE	12.0	95000	0	2.00	12.0
*	FW CRACKED	12.0	89000	0	2.00	60.0
	H PROC JULY '82	9.0	364800	1440	0.96	50.4
LUBES - PDA	FW LUBE	12.0	86000	415	2.10	115.0
	SHELL	12.0				
	GDANSK	15.0				
- FURFURAL/NMP	SHELL	25.0				
*	EXXON NMP - 103 VI	25.0	202000	200	1.40	54.3
	PLOCK	25.0				
	GDANSK	25.0				
- DEWAXING	SHELL MEK	27.0				
	PLOCK ACETONE/BENZ	27.0				
	GDANSK DI-ME	27.0				
- H'FINISHING	SHELL	27.0				
	PLOCK	27.0				
	GDANSK	27.0				
GREASE - PER TONNE	STRATCO					

207

TABLE AP-E.7
USA
TYPICAL REFINERY UTILITY USAGE
****
PER 1.0 BBL CAPACITY EXCEPT AS NOTED

UNIT	REF HDBK 1990*	TYPICAL 'API		FUEL FIRED BTU	18 °F dT CW US GAL	POWER KWH	STEAM LB
H'CRACKING	* LUMMUS/OXY/AMOCO	12.4	783 SCFH2	56100	64	8.40	-35.5
		4.7	1720SCFH2	69800	164	16.50	-97.0
	* CHEVRON	23.0		143000	330	7.00	-50.0
	* IFP	21.5		40000		2.80	12.5
	* LINDE	21.5		50000	190	1.50	
	* UNOCAL/UOP	8.4		135000		10.00	
	H PROC JULY '82	20.0		192000	1080	4.80	14.4
THERMAL CRACKER	H PROC JULY '82	20.0		48000	1152	5.40	-15.6
VISBREAKING	* LUMMUS - 356'FFEED	8.2		75000	270	0.50	45.0
	* IFP	15.0		22800	0	1.90	10.6
	H PROC JULY '82	9.0		192000	346	0.36	30.0
COKING	* LUMMUS - DELAYED	7.4		145000	180	3.90	20.0
	* EXXON - FLEXI	3.1			400	13.00	-100.0
	* FW	2.6		120000	36	3.60	-40.0
	H PROC JULY '82 DE	9.0		218880	1195	1.20	34.8
	H PROC JULY '82 FL	9.0		-6000	1195	4.20	-79.2
COKE CALCINING-PER TONNE	* GKT - W GERMANY						
ASPHALT BLOWING	* SNAM - 80/100 PEN	5.9		89335		0.81	6.57
	- 40/50 PEN	5.1		57659		2.73	30.75
	PLOCK	8.0					
	GDANSK	8.0					
MTBE - PRODUCT	* CD TECH	45.4			1860	1.00	296.0
	* PHILLIPS	45.4			1870	1.10	224.0
MEA UNIT (1.0 TONNE S)	* H PROC JULY '82				31680	30.00	10080.0
	GDANSK						
SULFUR PLANT (1.0 TONNE S)	* H PROC JULY '82			3600000		108.00	-6720.0
	PLOCK						
	GDANSK						
H2 PLANT (1000 SCF) (6&7)				480	29	3.36	4.3

TABLE AP-E.8
USA
TYPICAL REFINERY UTILITY USAGE
****
PER 1.0 TONNE CAPACITY EXCEPT AS NOTED

UNIT	REF HDBK 1990	TYPICAL SP GR	FUEL FIRED KCAL	10 °C dT CW M3	POWER KWH	STEAM KG
CRUDE DISTILLATION	TECHNIP LO 4TWR	0.8550	74212	1.9	8.10	20.1
	* TECHNIP HI 4TWR	0.8550	111317	2.5	11.05	40.1
	H PROC JULY '82 Hy	0.9042	105264	14.2	1.67	25.3
	H PROC JULY '82 Lt	0.8251	153650	20.8	2.38	20.8
	GDANSK	0.8654	153000	0.4	5.00	40.2
CRUDE/VAC DISTILLATION	FW LO RANGE	1.0093	125734	0.5	3.74	67.9
	* FW HI RANGE	1.0093	188601	0.5	3.74	67.9
	PLOCK LO RANGE 1&2	0.8628	180380	8	4.80	56.0
	PLOCK HI RANGE 3&4	0.8628	205580	8	8.20	139.0
VAC DISTILLATION	* SHELL - LUBES	0.9218	174000	11.2	3.40	131.0
	H PROC JULY '82	0.9593	83337	14.6	2.36	89.4
	GDANSK	0.9340	122000	9.7	6.90	138.0
VAC FLASHER		0.0000	0			
LT ENDS FRACT'N (USE)						
LPG		0.5411	0	11.4	3.49	211.2
NAPHTHA SPLITTING		0.7796	0	13.7	2.42	256.5
HYDROTREATING - NAPHTHAS	H PROC JULY '82	0.8017	130588	6.4	9.43	59.9
	GDANSK	0.8017	178000	1.3	12.60	4.8
- GAS OILS	H PROC JULY '82	0.9042	147369	9.5	10.03	53.1
	PLOCK	0.8984	61000	14.0	14.00	55.6
	GDANSK	0.8984	131000	1.4	2.40	3.1
- RESID	* IFP - RESID	0.9659	86221	7.0	55.42	218.9
	* CHEVRON	0.0000	0	0.0	0.00	0.0
REFORMING	* CHEVRON + HT	0.7883	573487	4.8	5.59	-145.0
	* ENGELHARD-100 RON	0.7883	503058	1.2	15.98	0.0
	* IFP -102 RON	0.7883	130795	0.0	7.99	-45.3
	H PROC JULY '82	0.8017	759784	23.5	28.28	154.0
	PLOSK + HT (AVG)	0.7883	760000	15.0	42.00	138.8
	GDANSK	0.8017	657000	[illegible]	[illegible]80	521.2

TABLE AP-E.9
USA
TYPICAL REFINERY UTILITY USAGE
****
PER 1.0 TONNE CAPACITY EXCEPT AS NOTED

UNIT	REF HDBK 1990*	TYPICAL SP GR	FUEL FIRED KCAL	10 °C dT CW M3	POWER KWH	STEAM KG
FCCU	MW KELLOGG	0.9340	390019	0.0	6.07	-305.9
	H PROC JULY '82	0.9340	422627	29.4	44.50	47.7
	PLOCK I	0.9340	601930	32.0	62.00	55.6
	PLOCK II	0.9340	808770	17.0	28.00	74.1
TCCU	H PROC JULY '82	0.9340	471539	29.4	36.41	-47.7
ALKYLATION - PRODUCT	STRATCO H2SO4	0.7796	0	62.6	109.05	659.7
	PLOCK	0.7796	385680	116.0	41.00	130.0
OLIGOMERIZ'N - PRODUCT	MOBIL/BADGER	0.7796	0	4.6	80.78	0.0
	IFP	0.7796	0	40.2	15.35	197.9
CAT POLYMERIZATION	H PROC JULY '82	0.5859	0	20.5	41.27	936.3
PROPANE DEASPHALTING	IFP	0.9861	38206	0.0	8.94	20.3
	KERR-McGEE	0.9861	152823	0.0	12.77	34.8
	* FW CRACKED	0.9861	143171	0.0	12.77	173.9
	H PROC JULY '82	1.0071	574573	34.0	6.00	143.0
LUBES - PDA	FW LUBE	0.9861	138345	10.0	13.41	333.2
	SHELL	0.9861	550000	26.3	10.90	268.0
	GDANSK	0.9659	298600	9.5	31.60	147.0
- FURFURAL/NMP	SHELL	0.9042	414000	27.9	9.90	137.0
	* EXXON NMP - 103 VI	0.9042	354389	5.3	9.75	171.6
	PLOCK	0.9042	453850	30.0	20.00	333.3
	GDANSK	0.9042	281500	8.0	3.13	134.8
- DEWAXING	SHELL MEK	0.8927	440	36.1	27.40	1233.0
	PLOCK ACETONE/BENZ	0.8927	0	49.0	110.00	1463.0
	GDANSK DI-ME	0.8927	0	19.4	35.13	1593.7
- HYDROFINISHING	SHELL	0.8927	150000	4.1	9.20	106.0
	PLOCK	0.8927	152400	25.0	8.50	148.1
	GDANSK	0.8927	150000	11.1	3.95	141.0

210

TABLE AP-E.10
USA
TYPICAL REFINERY UTILITY USAGE
****
PER 1.0 TONNE CAPACITY EXCEPT AS NOTED

UNIT	REF HDBK 1990	TYPICAL SP GR	FUEL FIRED KCAL	10 °C dT CW M3	POWER KWH	STEAM KG
H'CRACKING	* LUMMUS/OXY/AMOCO	0.9833	90498	1.6	53.80	-103.2
		1.0389	106573	3.8	100.02	-266.8
	* CHEVRON	0.9159	247673	8.6	48.13	-156.0
	* IFP	0.9248	68607	0.0	19.07	38.6
	* LINDE	0.9248	85758	4.9	10.21	0.0
	* UNOCAL/UOP	1.0114	211722	0.0	62.26	0.0
	H PROC JULY '82	0.9340	326083	27.5	32.36	44.1
THERMAL CRACKER	H PROC JULY '82	0.9340	81521	29.4	36.41	-47.7
VISBREAKING	* LUMMUS - 356'FFEED	1.0129	117455	6.3	3.11	126.9
	* IFP	0.9659	37444	0.0	12.39	31.4
	H PROC JULY '82	1.0071	302407	8.2	2.25	85.1
COKING	LUMMUS - DELAYED	1.0187	225779	4.2	24.11	56.1
	EXXON - FLEXI	1.0513	0	9.1	77.87	-271.8
	FW	1.0552	180395	0.8	21.49	-108.3
	H PROC JULY '82 DE	1.0071	344744	28.3	7.50	98.7
	H PROC JULY '82 FL	1.0071	-9450	28.3	26.26	-224.7
COKE CALCINING-PER TONNE	* GKT - W GERMANY	0.0000	270000		54.00	1950.0
ASPHALT BLOWING	* SNAM - 80/100 PEN	1.0300	55000	0.0	4.00	20.0
	- 40/50 PEN	1.0360	65000	0.0	10.00	20.0
	PLOCK	1.0143	139700	0.0	5.00	18.5
	GDANSK	1.0143	90165	0.0	16.95	86.6
MTBE - PRODUCT	* CD TECH	0.7999	0	55.4	7.87	1057.3
	* PHILLIPS	0.7999	0	55.7	8.66	800.1
MEA UNIT (1.0 TONNE S)	* H PROC JULY '82	0.0000	0	132.0	33.06	5040.0
	GDANSK	0.0000	0	0.0	0.00	6292.0
SULFUR PLANT (1.0 TONNE S)	* H PROC JULY '82	0.0000	999295	0.0	119.02	-3360.0
	PLOCK	0.0000	1397000	0.0	68.00	-5181.0
	GDANSK	0.0000	33	35.0	11.90	-1075.0

TABLE AP-E.11
USA
TYPICAL REFINERY UTILITY USAGE
****
PER 1.0 TONNE CAPACITY EXCEPT AS NOTED

UNIT	REF HDBK 1990	TYPICAL SP GR	FUEL FIRED KCAL	10 °C dT CW KCAL	POWER KCAL	STEAM KCAL	TOTAL ENERGY KCAL/T	SAY USE TOTAL ENERGY M KCAL/T	SAY USE TOTAL ENERGY MBTU/Bbl
CRUDE DISTILLATION	TECHNIP LO 4TWR	0.8550	74212	1136	19445	14036	108829	110	58.7
	* TECHNIP HI 4TWR	0.3550	111317	1504	26516	28072	167409	170	90.2
	H PROC JULY '82 Hy	0.9042	105264	8532	4012	17697	135505	135	77.2
	H PROC JULY '82 Lt	0.8251	153650	12467	5715	14545	186377	185	96.9
	GDANSK	0.8654	153000	240	12000	28140	193380	195	105.5
CRUDE/VAC DISTILLATION	FW LO RANGE	1.0093	125734	283	8985	47561	182563	185	116.2
	* FW HI RANGE	1.0093	188601	283	8985	47561	245430	245	156.2
	PLOCK LO RANGE 1&2	0.8628	180380	4800	11520	39200	235900	235	128.3
	PLOCK HI RANGE 3&4	0.8628	205580	4500	19680	97300	327060	325	177.9
VAC DISTILLATION	* SHELL - LUBES	0.9218	174000	8520	8160	91700	282380	280	164.1
	H PROC JULY '82	0.9593	83337	8786	5672	62547	160341	160	97.0
	GDANSK	0.9340	122000	5820	16560	96600	240980	240	141.9
VAC FLASHER		0.0000	0	0	0	0	0		
LT ENDS FRACT'N (USE)		0.0000	0	0	0	0	0		
LPG		0.5411	0	6864	8379	147850	163094	165	55.6
NAPHTHA SPLITTING		0.7796	0	8246	5816	179583	193645	195	95.2
H'TREATING - NAPHTHAS	H PROC JULY '82	0.8017	130588	3849	22623	41913	198972	200	100.6
	GDANSK	0.8017	178000	780	30240	3360	212380	210	107.3
- GAS OILS	H PROC JULY '82	0.9042	147369	5688	24071	37163	214292	215	122.1
	PLOCK	0.8984	61000	8400	33600	38920	141920	140	80.4
	GDANSK	0.8984	131000	840	5760	2170	139770	140	79.2
- RESID	* IFP - RESID	0.9659	86221	4215	133006	153236	376678	375	229.4
	* CHEVRON	0.0000	0	0	0	0	0		
REFORMING	* CHEVRON + HT	0.7883	573487	2900	13421	-101488	488319	490	242.7
	* ENGELHARD-100 RON	0.7883	503058	725	38345	0	542128	540	269.4
	* IFP -102 RON	0.7883	130795	0	19173	-31715	118253	120	58.8
	H PROC JULY '82	0.8017	759784	14113	67868	107775	949540	950	479.9
	PLOSK + HT (AVG)	0.7883	760000	9000	100800	97160	966960	965	480.6
	GDANSK	0.8017	657000	3420	18720	364840	1043980	1045	527.7

TABLE AP-E.12
USA
TYPICAL REFINERY UTILITY USAGE
****
PER 1.0 TONNE CAPACITY EXCEPT AS NOTED

UNIT	REF HDBK 1990	TYPICAL SP GR	FUEL FIRED KCAL	10 °C dT CW KCAL	POWER KCAL	STEAM KCAL	TOTAL ENERGY KCAL/T	SAY USE TOTAL ENERGY M KCAL/T	SAY USE TOTAL ENERGY MBTU/Bbl
FCCU	MW KELLOGG	0.9340	390019	0	14564	-214143	190440	190	112.1
	H PROC JULY '82	0.9340	422627	17621	106800	33406	580454	580	341.8
	PLOCK I	0.9340	601930	19200	148800	38920	808850	810	476.3
	PLOCK II	0.9340	808770	10200	67200	51870	938040	940	552.3
TCCU	H PROC JULY '82	0.9340	471539	17621	87382	-33406	543136	545	319.8
ALKYLATION - PRODUCT	STRATCO H2SO4	0.7796	0	37566	261713	461785	761064	760	374.1
	PLOCK	0.7796	385680	69600	98400	91000	644680	645	316.9
OLIGOMERIZ'N - PRODUCT	MOBIL/BADGER	0.7796	0	2749	193862	0	196611	195	96.6
	IFP	0.7796	0	24097	36834	138536	199466	200	98.0
CAT POLYMERIZATION	H PROC JULY '82	0.5859	0	12289	99052	655404	766745	765	283.2
PROPANE DEASPHALTING	IFP	0.9861	38206	0	21458	14198	73863	75	45.9
	KERR-McGEE	0.9861	152823	0	30655	24340	207818	210	129.2
	* FW CRACKED	0.9861	143171	0	30655	121701	295527	295	183.7
	H PROC JULY '82	1.0071	574573	20427	14407	100092	709498	710	450.5
LUBES - PDA	FW LUBE	0.9861	138345	6013	32187	233260	409806	410	254.8
	SHELL	0.9861	550000	15780	26160	187600	779540	780	484.6
	GDANSK	0.9659	298600	5700	75840	102900	483040	485	294.1
- FURFURAL/NMP	SHELL	0.9042	414000	16740	23760	95900	550400	550	313.7
	* EXXON NMP - 103 VI	0.9042	354389	3160	23402	120117	501068	500	285.6
	PLOCK	0.9042	453860	18000	48000	233310	753170	755	429.3
	GDANSK	0.9042	281500	4782	7512	94360	388154	390	221.3
- DEWAXING	SHELL MEK	0.8927	440	21660	65760	863100	950960	950	535.2
	PLOCK ACETONE/BENZ	0.8927	0	29400	264000	1024100	1317500	1320	741.5
	GDANSK DI-ME	0.8927	0	11622	84312	1115590	1211524	1210	681.9
- H'FINISHING	SHELL	0.8927	150000	2460	22080	74200	248740	250	140.0
	PLOCK	0.8927	152400	15000	20400	103670	291470	290	164.0
	GDANSK	0.8927	150000	6654	9480	98700	264834	265	149.1
GREASE - PER TONNE	STRATCO	0.0000	545000	396000	195600	0	1136600	1135	

TABLE AP-E.13
USA
TYPICAL REFINERY UTILITY USAGE
****
PER 1.0 TONNE CAPACITY EXCEPT AS NOTED

UNIT	REF HDBK 1990	TYPICAL SP GR	FUEL FIRED KCAL	10 °C dT CW KCAL	POWER KCAL	STEAM KCAL	TOTAL ENERGY KCAL/T	SAY USE TOTAL ENERGY M KCAL/T	SAY USE TOTAL ENERGY MBTU/Bbl
H'CRACKING	* LUMMUS/OXY/AMOCO	0.9833	90498	933	129109	-72207	148332	150	92.0
		1.0389	106573	2255	240036	-186741	162123	160	106.2
	* CHEVRON	0.9159	247673	5148	115516	-109192	259145	260	149.6
	* IFP	0.9248	68607	0	45758	27033	141397	140	82.4
	* LINDE	0.9248	85758	2935	24513	0	113206	115	66.0
	* UNOCAL/UOP	1.0114	211722	0	149428	0	361150	360	230.3
	H PROC JULY '82	0.9340	326083	16520	77673	30837	451112	450	265.6
THERMAL CRACKER	H PROC JULY '82	0.9340	81521	17621	87382	-33406	153117	155	90.2
VISBREAKING	* LUMMUS - 356'FFEED	1.0129	117455	3808	7461	88859	217583	220	138.9
	* IFP	0.9659	37444	0	29731	21950	89125	90	54.3
	H PROC JULY '82	1.0071	302407	4908	5402	59578	372296	370	236.4
COKING	* LUMMUS - DELAYED	1.0187	225779	2524	57861	39267	325431	325	209.0
	* EXXON - FLEXI	1.0513	0	5436	186898	-190255	2079	2	1.4
	* FW	1.0552	180395	487	51564	-75819	156627	155	104.2
	H PROC JULY '82 DE	1.0071	344744	16951	18008	69111	448814	450	285.0
	H PROC JULY '82 FL	1.0071	-9450	16951	63029	-157287	-86757	-85	-55.1
COKE CALCINING-PER TONNE	* GKT - W GERMANY	0.0000	270000	0	129600	1365000	1764600	1765	-
ASPHALT BLOWING	* SNAM - 80/100 PEN	1.0300	55000	0	9600	14000	78600	80	51.0
	- 40/50 PEN	1.0360	65000	0	24000	14000	103000	105	67.3
	PLOCK	1.0143	139700	0	12000	12950	164650	165	105.3
	GDANSK	1.0143	90165	0	40682	60634	191481	190	122.4
MTBE - PRODUCT	CD TECH	0.7999	0	33220	18895	740134	792249	790	399.5
	* PHILLIPS	0.7999	0	33399	20784	560102	614285	615	309.8
MEA UNIT (1.0 TONNE S)	H PROC JULY '82	0.0000	0	79200	79344	3528000	3686544	3685	-
	GDANSK	0.0000	0	0	0	4404400	4404400	4405	-
SULFUR PLANT (1.0 TONNE S)	H PROC JULY '82	0.0000	999295	0	285638	-2352000	-1067067	-1070	-
	PLOCK	0.0000	1397000	0	163200	-3626700	-2066500	-2065	-
	GDANSK	0.0000	33	21000	28560	-752500	-702907	-705	-
H2 PLANT (1000 NM3)(6&7)		0.0000	4038	2438	269331	45825	321633	320	-

TABLE AP-E.14
USA
TYPICAL REFINERY UTILITY USAGE
****

COMPARISON OF TYPICAL REFINERY UNIT TOTAL ENERGY REQUIREMENTS
AGAINST A REASONABLY EFFICIENT 80 000 BPSD USA FUELS REFINERY
(ENERGY REQUIREMENT = 380 000 BTU/BBL CRUDE FEED)

REF: PELHAM & MORIARTY, PROFIMATICS INC, HYDROCARBON PROCESSING, JULY 1985 Pg 51 - TABLE 1

UNIT		CAPACITY BPSD	TOTAL ENERGY DEMAND Btu/BbL	CALC'D TOTAL ENERGY DEMAND M Btu/D	REPORTED TOTAL ENERGY DEMAND M Btu/D	TOTAL ENERGY DEMAND %
CRUDE/VAC UNIT		80000	133700	10696.0		247592.6
LT ENDS FRACTINATION	SAY	1000	56300	56.3		1303.2
NAPHTHA HDS		16000	101100	1617.6		37444.4
CATALYTIC REFORMER		16000	480200	7683.2		177851.9
ALKYLATION UNIT		5500	368600	2027.3		46928.2
FCC UNIT		24000	341500	8196.0		189722.2
TOTAL PROCESS UNITS			378455	30276.4		700842.6
TOTAL REFINERY PREDICTED			378455	30276.4		
TOTAL REFINERY REPORTED		80000	380000		30400.0	
TOTAL CRUDE FEED @ 6.0 MM BTU/BbL				480000.0	480000.0	
ENERGY EFFICIENCY - % ON CRUDE				6.31	6.33	

NOTE: THE CLOSE CORRESPONDENCE OF THESE RESULTS APPEARS TO JUSTIFY THE GENERAL VALIDITY OF THE "TOTAL ENERGY DEMAND" FACTORS IN REPRESENTING REASONABLE ENERGY EFFICIENCIES IN A MODERN REFINERY CONTEXT.

HOWEVER, IT SHOULD NOT BE OVERLOOKED THAT THE CONCLUSIONS OF THIS PAPER WITH THERMODYNAMIC AND PRACTICAL CONSIDERATIONS OF REFINERY ENERGY LOSSES WAS TO SUGGEST THAT GIVEN THE CURRENT REFINERY CONFIGURATIONS AND TECHNOLOGIES, CONCEIVABLE FURTHER IMPROVEMENTS COULD APPROXIMATE 23 PERCENT.

TABLE AP-E.15
USA
TYPICAL REFINERY UTILITY USAGE
****
SELECTED SPECIFIC ENERGY DEMANDS

UNIT	BASIS FEED/ PRODUCT	FEEDSTOCK 'API	FEEDSTOCK Sp Gr		SPECIFIC ENERGY DEMAND KCAL/T	SPECIFIC ENERGY DEMAND BTU/BBL
DISTILLATION					*10^3	*10^3
ATMOSPHERIC	FEED	25.0	0.9042		135	77.0
ATMOSPHERIC	FEED	40.0	0.8251		185	96.2
ATMOSPHERIC/VACUUM LUBES	FEED	32.0	0.8654		305	166.4
ATMOSPHERIC/VACUUM FLASH	FEED	32.0	0.8654		245	133.7
VACUUM - FUELS	FEED	16.0	0.9593		160	96.8
LPG	FEED	130.0	0.5411		165	56.3
NAPHTHA SPLITTING	FEED	50.0	0.7796		195	95.8
FCC GAS PLANT	FEED		0.0000			
CRACKING						
FCC	FEED	20.0	0.9340		580	341.5
TCC	FEED	20.0	0.9340		545	320.9
VISBREAKING	FEED	9.0	1.0071		350	222.2
DELAYED COKING	FEED	9.0	1.0071		450	285.7
FLUID COKING	FEED	9.0	1.0071		-85	-54.0
FLEXI COKING	FEED		0.0000			
HYDROTREATING						
NAPHTHA	FEED	45.0	0.8017		200	101.1
GAS OIL	FEED	25.0	0.9042		215	122.6
RESID	FEED		0.0000			
HYROCRACKING						
GAS OILS	FEED	20.0	0.9340		400	235.5
RESID	FEED		0.0000			
LUBES						
VACUUM - LUBES	FEED	22.0	0.9218		750	466.2
PDA - LUBES	FEED	12.0	0.9861		250	145.3
FURFURAL/NMP	FEED	25.0	0.9042		525	299.3
DEWAXING - MEK/DI-ME	FEED	27.0	0.8927		950	534.7
H'FINISHING	FEED	27.0	0.8927		200	112.6
BLENDING	PRODUCT	27.0	0.8927	USE	30	16.9
REFORMING	FEED	45.0	0.8017		950	480.2
TREATING						
MEROX	FEED	35.0	0.8498	USE	20	10.7
PDA - FUELS	FEED	9.0	1.0071		250	158.7
AMINE	PRODUCT		PER TONNE		3650	3650.0
SULFUR PLANT	PRODUCT		PER TONNE		-1000	-1000.0
HYDROGEN PLANT	PRODUCT		1000 NM3		320	320.0
GENERAL						
ALKYLATION	PRODUCT	50.0	0.7796		750	368.6
POLYMERIZATION	FEED	110.0	0.5859		750	277.0
OLIGOMERIZATION	PRODUCT	50.0	0.7796		200	98.3
MTBE	PRODUCT	45.0	0.8017		700	353.8
GREASE	PRODUCT		PER TONNE		1150	1150.0
COKE CALCINING	PRODUCT		PER TONNE		1750	1750.0
ASPHALT BLOWING	FEED		PER TONNE		100	100.0
BLENDING - FUELS	FEED	35.0	0.8498		20	10.7

APPENDIX F

INSTRUMENTATION

General situation

The current situation with regard to process instrumentation in Romania is rather unique. For many years the import of foreign made process control instruments was almost totally prohibited. Also, the lack of hard currency allowed for an extremely limited purchasing of spare parts. This lack of spare parts for the imported instruments has resulted in an accelerated rate of instrument wear, which in turn, has led to the following consequences.

- A particular group of identical instruments cannot be repaired due to the lack of spare parts. As a result these instruments would then be disconnected from the process control and their functions would be transferred either to manual control or, sometimes, would not be performed at all.

  Example:

  Imported oxygen analyzers were originally installed on many process heaters. Within two to three years after installation, no spare parts were available. The analyzers were mostly abandoned in place and since that time no continuous measurements of excess oxygen have been made.

  Example:

  An imported lower explosive limit (LEL) detection system has over 90 percent of the detector cells inoperative, and even portable analyzers for explosive gases are out of order due to the lack of spare parts. Since the LEL detection system cannot be replaced by a human operator, the detection of low explosion level is not done at all, thereby increasing the probability of a serious accident. Due to the lack of spare parts, many process connected analyzers were abandoned in place. Sampling is currently done manually and the analysis is made in the refinery's laboratory. As a result, it is impossible to continuously monitor the streams and the time required for an analysis has increased to three to four hours.

  The crisis with the spare parts for imported instruments has been partially resolved by making some of the spare parts in the refinery's instrument repair shops. This has helped to run certain types of imported instruments for years. However, according to Petrobrazi engineers, some vital spare parts just cannot be manufactured in their shops.

Another solution was to create a domestic instrumentation industry. Currently, there are several manufacturers of various general types of instrumentation: transmitters for pressure, differential pressure, level displacer transmitters, bi-metallic thermometers, pressure gauges, panel mounted controllers, multi-pen recorders, etc. Most of these instruments are produced based on a license agreement with such western companies as Foxboro and Kent. These instruments are behind the modern generation of instruments by 20 to 25 years. Also, unlike their original counter parts, some of the domestically manufactured instruments are much less reliable and their performance may be considered satisfactory only because there is no better choice in Romania.

Unfortunately, the Petrobrazi and Petrotel refineries have not conducted a statistical analysis of instrument failure and the numbers for the mean time between failures (MTBF) itemized per each type of instruments are not available. A rough estimate of the MTBF for Romanian made field installed transmitters was about two months for each installed transmitter. Another instrument requiring continuous maintenance are Romanian made multi-pen recorders. All this makes instrument maintenance extremely difficult and time consuming. The instrument personnel seem to be totally immersed in the daily routine of incessant efforts to keep their refineries running regardless of cost. They do not have time to analyze their situation and find more efficient ways of operation. The refinery is working on a modernization plan for the in refinery istrumentation.

Laboratory analyzers

The refinery has a wide variety of analyzers in their laboratory. The instruments are maintained in working order. Field samples are taken at about four hour intervals. The time required to finalize each analysis averages between three and four hours. An orsat analysis of flue gases is made once every 24 hours.

Custody transfer

In addition to shipments by rail and truck transport, which pass through weigh stations, the refinery receives crude and ships out product by pipeline. The refinery does not buy crude directly from suppliers. The crude pipeline from the port of Constanta is operated by a specialized company, ITTC, which delivers the crude to several refineries by pipeline. Another company, Chimpex, deals directly with oil tankers. Chimpex is located in Constanta and has receiving tanks of its

own. According to the information obtained at the refinery, Chimpex never stores the crude from any given tanker in dedicated tanks. The crude is pumped in any available receiving tank. Consequently, the refinery is always getting a mixture of various crudes. The crude mixtures' parameters vary widely from one transfer to another.

The transfer between a tanker and Chimpex's receiving tanks is accomplished without the refinery's participation. The received crude is measured by level, by a Chimpex employee who also makes calculations accounting for tank geometry, temperature, specific gravity, etc. Chimpex settles the transfer with the oil tanker.

The transfer of crude to the refinery is as follows: the dead stock level in the tank assigned for receiving is usually about 70 centimeters. It is measured manually by the representative of ITTC (Chimpex is not involved) and by the refinery's employees, each having level and temperature instruments of their own. After the dead stock level has been verified, the pumping starts. The tank is usually filled to the twelve meter level. The crude is settled for two hours. Separated water is then drained and both representatives make measurements and calculations. After that the crude becomes the property of the refinery. A similar, if not identical, procedure is followed while transferring the products by pipeline from the refinery.

This type of custody transfer is cumbersome and prone to excessive errors. The refinery is very interested in alternative techniques of custody transfer, especially in transfer based on a precise measurement of flow.

Currently, the Petrobrazi refinery has several pipelines supplying it with crude:

- One line 14", 6 900 tonnes per day
- One line 12", 5 800 tonnes per day
- One line 10", 4 000 tonnes per day
- One line 8", 2 500 tonnes per day

A capacity of 20 000 tonnes per day is divided proportionally among the lines by the individual pipe flow area.

It is suggested that the refinery carefully analyze the present custody transfer methods. The analysis should account for the cost of custody transfer equipment, installation, calibration, maintenance, and the possible losses of hard currency due to the inadequate accuracy of the present incoming crude measurements and the outgoing refinery products which are shipped out by pipeline. Expected future increases in the price of crude and refinery products make this a very important activity.

With good maintenance and accurate calibration, precision flow meters provide higher accuracy and repeatability. An accuracy of 0.15 percent or even 0.1 percent is readily achievable. The cost of a custody transfer station with a capacity of 3.5 million tonnes per year is high. However, improvement in the accuracy of measurements of received crude by 0.1 percent amounts to 3 500 tonnes per year, which at $150 per tonne amounts to $525 000 per year. There are many other advantages, including the direct transfer of the crude, which could be realized if precision flow meters are used for the custody transfer.

Depending on the required maximum flow of the measured fluid, the custody transfer station should have several paralleled positive displacement meters or turbine meters with the related pipe runs, valving, and crude oil filtering. Also it should have instruments for measuring the temperature and density of the fluid. For crude oil measurements, it should also have a sampling system with intermittent or on-line monitoring of bottoms, sludge, and water.

In order to calibrate flow meters on a regular basis, the custody transfer installation would have spare flow meters. It is recommended that either a stationary meter prover or installation designed such that a transportable meter prover would have access to all of the meters be provided.

There is an alternative to meter provers in Romania: namely, the Flow Laboratory in Pascani. With some modifications and upgrading this laboratory could be used as a center for the custody transfer flow meters calibration.

Flares

The Petrobrazi complex has five flares. Gases from the flare header are recovered and used for combustion. However, visual observations show that most of the flares are almost burning constantly and producing a significant amount of smoke. There is no automatic control of the steam admitted to flares. The flow of flare gases is not measured, and their chemical composition is not analyzed. A TV camera focused on a flare and a receiver mounted in the control room where the flare steam flow is regulated would help greatly in smoke reduction.

New refinery

The tank farm has ninety-six tanks for various products. The tank management system is Hungarian MMG with an accuracy of plus or minus 1.00 millimeter. The tanks are divided into three groups, each served by a dedicated multiplexer and a dedicated microprocessor, which, in turn, reports to the supervising microprocessor. Each group of tank level transmitters is scanned every two minutes. Each tank has at least one point of temperature measurement. Some tanks (such as the tanks for heavy oil products) have nine equidistant RTDs for

220

temperature averaging. Also, each tank's geometry data is stored in the ROM of a dedicated microprocessor. The geometry of each tank is checked every two years. The specific gravity of the liquid in each tank is entered in the computer of the tank management system manually. Logging is automatic. Tank loading and unloading are manual. Basically, this system is operating well at present. However, the multiplexers are not reliable and require significant time for maintenance and also spare parts.

There are fourteen spheres. The sphere monitoring system is based on Romanian manufactured explosion proof transmitters. Data logging is manual. This tank farm has not yet been put in service.

Advance controls

The implementation of distributed control systems (DCS) to control the process units is the fastest and most effective way for Petrobrazi to bring the refinery's process control up to US and Western European standards.

With the implementation of DCS on the process units, the opportunity for a greatly increased use of advance controls and stratagems dawned for US refineries. It became apparent to many of these refineries that the increased profits resulting from the advance controls would quickly payout on analog instrumented process units, the costs of a DCS and the advance controls. One US major refinery decided to convert all its refinery process controls to DCS; their experience was that it normally took four to twelve months of the new control's operations to recover the DCS/Advance control costs for almost all units.

- Crude Units

  - Decoupling the side draws - This control allows the board operator to increase/decrease a product draw (changing that product's IBP and EBP) without upsetting the product sidedraws.

  - Cutpoint calculation - This control replaces an expensive high maintenance analyzer. Calculating and inferring boiling point measurements such as 95 percent point from tower measurements. This measurement can then be used for tower control.

  - Pumparound control - This control looks at the pumparound flows, temperature, energy use and heat transfer and determines the economics of increasing/decreasing pumparound to increase/decrease products flow.

- Reformer Units

  Reactor optimization - Controls reactor temperatures to optimize the catalyst life versus the octane number output.

  Prefractionator control - Sharpens fractionation so as to minimize catalyst poisoning heavy ends and non-retractable light components in the reactor feed, thereby increasing the reformer's octane barrel output.

- Hydrogen Desulfurizers

  Hydrogen control - Ratio hydrogen to feed to smooth flow, enhance the desulfurization reaction and extend catalyst life.

- Furnace/Heaters

  Furnace air control - Regulates the combustion air to minimize excess air and prevent smoke formation.

When starting an advance control project, a 'process audit' covering those areas that the advance controls will impact, needs to be made. This audit should show all pertinent data such as flows, process condition, energy usage, product quality and stream values. This establishes the baseline. Later, three to four months after implementation of the advance controls a final process audit needs to be taken. With the data from the two audits, a final report can be issued showing the actual savings versus the estimated savings and reasons for any differences. Besides establishing credibility for the project estimate and payouts, it provides the feedback necessary to improve the savings estimating.

Some ideal members of this final audit team are the advance control engineer, the process unit operations engineer and one of the consulting engineers, if used. With the high degree of savings seen on advance control projects, there is usually a push for rapid implementation. This push, plus a lack of in-house expertise and availability makes it prudent to hire outside expertise, i.e. consultant. This an opportunity to upgrade the facility's staff expertise. A staff advance control engineer should be assigned to work with and monitor the consultant. On later projects, this will allow more (or sometimes all) of the same type of work to be done in-house.

APPENDIX G

ELECTRICAL ENERGY CONSUMPTION IN 1990 AND ELECTRICAL ENERGY PRICES

Electric Energy Prices (as of July 1991)

35 kV level

Active power at peak demand (between 17 & 22 hours)	5.136 LEI/KWh
Active power at remaining times	1.882 LEI/KWh
Reactive power	0.234 LEI/KVArh

110 kV level

Active power at peak demand (between 17 and 22 hours)	4.359 LEI/KWh
Active power at remaining times	1.643 LEI/KWh
Reactive power	0.234 LEI/KVArh

There are no additional charges except for a times two price penalty for energy used over an agreed upon energy demand.

Electrical energy required for refinery

Old Refinery: Average agreement, 32 MW. For July 1991 the refinery used 17/18 MW.

Reason:	Reformers:	at 50% operation
	FCC:	not in operation
	Coker:	not in operation

New Refinery: Average agreement, 16 MW. For July 1991, the refinery used 7 MW.

TABLE AP-G.1A - PROCESS ELECTRICAL ENERGY CONSUMPTION 1990

	Projected		January		February		March	
	Production kWh / tonne	Index of Consumption kWh / tonne	Actual Production tonne	Actual Consumption kWh / tonne	Actual Production tonne	Actual Consumption kWh / tonne	Actual Production tonne	Actual Consumption kWh / tonne
Desalting	3000000	0.800	244674	220000	240041	192000	250176	200000
Atmospheric Distillation Unit 2	600000		5800	1000	3959	1000	6824	1000
Atm & Vacuum Distillation 1	3000000	4.470	224088	850000	239465	784000	249577	1150000
Atm & Vacuum Distillation 2	3500000	7.910	230126	800000	256000	1284000	214800	1400000
Reforming 1	1085000	55.720	87467	3450000	73358	2900000	88014	3700000
Naphtha Hydrotreating - 120	865390	43.180	26601	650000	46278	750000	52644	756000
Catalytic Reforming - 130	500000	16.690	13536	120000	35872	440000	43020	700000
Gas Fractionation - 135	250000	7.250						
Aromatic Extraction - 136	440000	27.720	8436	150000	13803	310000	11853	280000
Aromatic Fractionation - 137	240000	25.000	1218	32000	2283	32000	1950	50000
Gas Oil Hydrotreating - 600RC1	840000	26.420	14295	140000	18342	248000	18960	300000
Hydrobon	208000	12.950	8839	120000	7790	100000	10245	40000
Jet Fuel Hydrotreating - 121	340000	15.320	13786	220000	13494	210000	16251	150000
Kerosene - Gas Oil Hydrotreating 123	1000000	15.320			10625	170000	7306	150000
Gas Absorption & Fractionation	220000	540.730	5055	600000	6710	750000	4937	600000
Coking Unit 1	500000	25.266	12400	140000	36900	400000	41500	500000
Coking Unit 2	550000	33.020	40700	690000	36900	400000	41500	500000
Coking Unit 3 - 180	800000	13.680	55400	500000				
FCC	1124000	52.140	106392	2300000	102190	3100000	105739	3500000
Furfural Gas Oil Extraction	100000	65.000	3733	38000	3459	35000	18582	250000
Expansion of Xylene Production	54000	136.160	37355	2785000	34563	2800000	32753	3100000
Sebox - 133	88875	80.880	5073	200000	6964	350000	7341	370000
Meta Xylene Isomerization - 144	320000	53.130	26866	936235	22702	860000	25077	1500000
Para Xylene Fractionation	20000	43.720						
Para Xylene Fractionation - 146	53000	53.000	13126	550000	1562	621000	12316	600000
Waste Water Treatment 1	17600000	1.792		600000		600000		700000
Waste Water Treatment 3	17600000	1.792		110000		120000		150000
C5 Fraction Isomerization	220000	78.440	7414	610000	7412	610000	8007	660000
Flame Gas Recovering				307000		170000		100000
Railway Expedition				32000		28000		45000
DA Storage Pumps				5000		3000		4000
DAV 1 Storage Pumps				110000		160000		180000
DAV 2 Storage Pumps				160000		231000		200000
Deep Cold Water				60000		75000		60000
Surface Water				335000		386000		434000
Treated Water				245000		240000		250000
Water For DAV, Coking				1850000		2070000		2650000
10000 Cooling Tower (Reforming 2)				1700000		1800000		2500000
8000 Cooling Tower (Reforming 2)				570000		750000		850000
FCC Cooling Tower				840000		1000000		1213000
Xylene Cooling Tower				250000		345000		600000
Demineralized Water For New Refinery				35000		28000		35000

TABLE AP-G.1B - PROCESS ELECTRICAL ENERGY CONSUMPTION 1990

	April		May		June		July	
	Actual Production tonne	Actual Consumption kWh / tonne	Actual Production tonne	Actual Consumption kWh / tonne	Actual Production tonne	Actual Consumption kWh / tonne	Actual Production tonne	Actual Consumption kWh / tonne
Desalting	220299	176000			145794	117000	214694	179000
Atmospheric Distillation Unit 2		1000	2600	1000	10100	1000	2500	1000
Atm & Vacuum Distillation 1	219769	1100000			145573	450000	214182	1150000
Atm & Vacuum Distillation 2	233974	1700000	209744	1700000	222498	1800000	109373	795000
Reforming 1	85503	3500000	80654	3500000	88109	2900000	63920	3300000
Naphtha Hydrotreating - 120	45563	900000	40878	850000	17429	250000	23333	580000
Catalytic Reforming - 130	31895	414000	17316	215000	6083	80000	32480	410000
Gas Fractionation - 135								
Aromatic Extraction - 136				10000	9321	10000	9730	220000
Aromatic Fractionation - 137				6000	7413	55000	1694	24000
Gas Oil Hydrotreating - 600RC1	17309	250000	16885	250000	8815	180000	3694	50000
Hydrobon							1694	75000
Jet Fuel Hydrotreating - 121	8305	13200	2728	50000	13092	150000	11329	150000
Kerosene - Gas Oil Hydrotreating 123	11030	170000			4084	70000	6158	95000
Gas Absorption & Fractionation	6201	850000			9797	450000	8244	750000
Coking Unit 1	38350	450000					29150	332000
Coking Unit 2	38950	450000			13400	200000	30010	400000
Coking Unit 3 - 180			17360	194000	19500	250000	26745	300000
FCC	109864	3600000	77314	2950000			33519	1350000
Furfural Gas Oil Extraction	15855	248000	1116	30000	9976	20000	7857	90000
Expansion of Xylene Production	35075	2900000	33070	2950000	36569	2027000	27294	3050000
Sebox - 133								
Meta Xylene Isomerization - 144			19303	1550000	19482	1150000	15198	1280000
Para Xylene Fractionation								
Para Xylene Fractionation - 146	16890	1600000	6235	1500000	1798	100000	9369	170000
Waste Water Treatment 1		720000		566000		450000		555000
Waste Water Treatment 3		150000		130000		150000		145000
C5 Fraction Isomerization	8975	598000	8753	770000	6348	750000	6400	750000
Flame Gas Recovering		100000		100000		100000		100000
Railway Expedition		50000		50000		50000		50000
DA Storage Pumps		5000		5000		5000		5000
DAV 1 Storage Pumps		200000				150000		20000
DAV 2 Storage Pumps		200000		250000		250000		170000
Deep Cold Water		50000		50000		50000		60000
Surface Water		426000		439000		405000		406000
Treated Water		245000		240000		240000		250000
Water For DAV, Coking		2600000		1150000		1600000		210000
10000 Cooling Tower (Reforming 2)		1900000		1700000		1500000		1800000
8000 Cooling Tower (Reforming 2)		750000		600000		900000		1200000
FCC Cooling Tower		1000000		807000		800000		750000
Xylene Cooling Tower		500000		350000		600000		550000
Demineralized Water For New Refinery		35000		35000		35000		35000

TABLE AP-G.1C - PROCESS ELECTRICAL ENERGY CONSUMPTION 1990

	August		September		October		November		December	
	Actual Production tonne	Actual Consumption kWh / tonne	Actual Production tonne	Actual Consumption kWh / tonne	Actual Production tonne	Actual Consumption kWh / tonne	Actual Production tonne	Actual Consumption kWh / tonne	Actual Production tonne	Actual Consumption kWh / tonne
Desalting	235995	189000	267749	214000	214988	171000	194054	155000	244080	20000
Atmospheric Distillation Unit 2	4700	1000		1000		1000		1000		1000
Atm & Vacuum Distillation 1	235429	1140000	267105	1500000	214472	1018000	193588	901000	243496	1050000
Atm & Vacuum Distillation 2	89805	800000	276919	1048000	104824	632000	136189	1000000	47222	528000
Reforming 1	75091	2500000	34787	1574000	54333	1950000	78059	3340000	64207	2552000
Naphtha Hydrotreating - 120	25517	635000	23515	286000	23061	376000	29849	745000	6080	150000
Catalytic Reforming - 130	24352	300000	22390	270000	13252	162000		50000		50000
Gas Fractionation - 135										
Aromatic Extraction - 136	8598	205000	11138	250000				10000		10000
Aromatic Fractionation - 137	1076	15000	1722	25000	1156	17000		10000		1000
Gas Oil Hydrotreating - 600RC1			12430	170000	5298	100000	18623	251000	8470	115000
Hydrobon	4815	70000								
Jet Fuel Hydrotreating - 121	11052	178000	14454	185000	7815	125000	14746	235000	8469	135000
Kerosene - Gas Oil Hydrotreating 123	9015	150000					9433	6000		
Gas Absorption & Fractionation	2059	800000	3250	600000	4664	650000	6946	900000	3539	750000
Coking Unit 1	23300	260000	42600	450000	40890	450000	13224	145000	6108	70000
Coking Unit 2	28900	324000					12191	621000	21000	245000
Coking Unit 3 - 180	12325	259000	31790	600000		38000	41477	2993000	18318	500000
FCC	87237	2669000	99327	3600000	74433	2198000	95221	127000	92861	3500000
Furfural Gas Oil Extraction	6614	90000	6654	110000	90109	100000	5762	2700000	5084	120000
Expansion of Xylene Production	32609	2487000	18358	1500000	19088	1490000	30747		29079	2900000
Sebox - 133			9223	1[illegible]000				1600000	9315	12000
Meta Xylene Isomerization - 144	18759	1500000	8818	850000	1140	120000	24088		10543	650000
Para Xylene Fractionation								536000		
Para Xylene Fractionation - 146	15342	650000	4370	787000			12244	788000	9146	15000
Waste Water Treatment 1		583000		500000		610000		150000		580000
Waste Water Treatment 3		150000		150000		150000		540000		150000
CS Fraction Isomerization	1714	230000	5916	770000	3410	334000	6499	100000	1335	76000
Flame Gas Recovering		100000		100000		100000		50000		100000
Railway Expedition		50000		50000		50000		5042		50000
DA Storage Pumps		5000		5839		5657		180000		5860
DAV 1 Storage Pumps		200000		180000		140000		100000		160000
DAV 2 Storage Pumps		100000		60000		100000		1000[illegible]		100000
Deep Cold Water		10000		10000		10000		402000		10000
Surface Water		408000		350000		270000		250000		387000
Treated Water		245000		235000		249000		1175000		245000
Water For DAV, Coking		2500000		2202000		1248000		1190000		1250000
10000 Cooling Tower (Reforming 2)		1400000		1360000		850000		950000		1250000
8000 Cooling Tower (Reforming 2)		1100000		850000		745000		1000000		750000
FCC Cooling Tower		1200000		950000		850000		1000000		1025000
Xylene Cooling Tower		500000		450000		400000		35000		1050000
Demineralized Water For New Refinery		35000		35000		35000				35000