PN-ABN-596
81472

EVALUATION AUDIT REPORT CZECHO-SLOVAKIAN PETROLEUM REFINERY KAUCUK, KRALUPY

A SELECTIVE REFINERY ANALYSIS FOR: OPERATION, ENERGY USE, ENVIRONMENTAL IMPACTS AND IMPROVEMENT OPPORTUNITIES

MAY, 1992

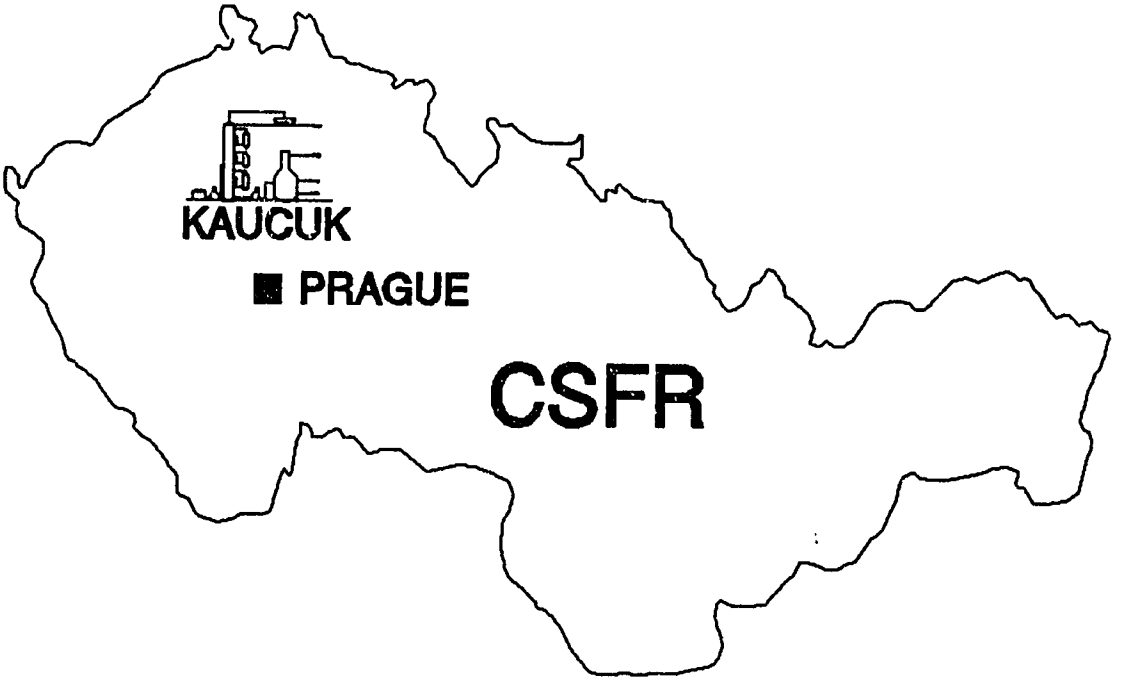

PREPARED BY: DAVY MCKEE CORPORATION, CHICAGO, IL USA

U.S. EMERGENCY ENERGY PROGRAM FOR EASTERN AND CENTRAL EUROPE

U.S. AGENCY FOR INTERNATIONAL DEVELOPMENT
BUREAU FOR EUROPE
WAHINGTON, D.C. 20523

EVALUATION AUDIT REPORT
CZECHO-SLOVAKIAN PETROLEUM REFINERY
KAUCUK, KRALUPY

A SELECTIVE REFINERY ANALYSIS FOR:
OPERATION, ENERGY USE, ENVIRONMENTAL IMPACTS
AND IMPROVEMENT OPPORTUNITIES
MAY, 1992

PREPARED BY: DAVY MCKEE CORPORATION, CHICAGO, IL USA
300 SOUTH RIVERSIDE PLAZA
SUITE 1800
CHICAGO, IL 60606
(312) 669-7000

LEAD / PROCESS: ROBERT A. JURISH
INSTRUMENTATION: THOMAS J. DEMPSEY
ELECTRICAL: THOMAS J. DEMPSEY
MECHANICAL: GEORGE W. HAMILTON
LEAD AUTHOR: ROBERT A. JURISH
PROJECT MANAGER: P.D. AGRAWAL

U.S. EMERGENCY ENERGY PROGRAM FOR EASTERN AND CENTRAL EUROPE

U.S. AGENCY FOR INTERNATIONAL DEVELOPMENT
BUREAU FOR EUROPE
OFFICE OF DEVELOPMENT RESOURCES
ENERGY AND INFRASTRUCTURE DIVISION
WASHINGTON, D.C. 20523

USAID CONTRACT EUR-0015-C-00-1011-00

REFINERY EVALUATION AND AUDIT
KAUCUK REFINERY WORKS, KRALUPY, CZECHOSLOVAKIA
TABLE OF CONTENTS

EXECUTIVE SUMMARY

A. INTRODUCTION

1. OBJECTIVES
2. REFINERY SELECTION
3. SUMMARY OF FIELD ACTIVITIES
4. REFINERY DESCRIPTION
5. TYPES OF ENERGY IMPROVEMENT OPPORTUNITIES
6. TYPES OF ENVIRONMENTAL EMISSIONS IMPROVEMENTS

B. REFINERY ENERGY BALANCE

1. OPERATING UNIT ENERGY USE

2. FUEL SYSTEM
2.1. Fuel Sources
2.2. Fuel Distribution
2.3. Fuel Users

3. STEAM SYSTEM
3.1. Steam Generation
3.2. Steam Levels
3.3. Steam Users

4. ELECTRIC POWER SYSTEM
4.1. Electricity Sources / Generation
4.2. Electric Distribution System
4.3. Electric Power Users

5. COOLING WATER SYSTEM
6. AIR COOLERS
7. ENERGY RECOVERY SYSTEMS

C. **REFINERY FLEXIBILITY**

1. OVERVIEW

2. ATMOSPHERIC DISTILLATION UNIT
2.1. Process Flow Diagram
2.2. Feedstock
2.3. Unit Flexibility
2.4. Operational Sensitivity
2.5. Product Specifications
2.6. Unit Yields
2.7. Unit Modification Potential
2.8. Capacity Increase Potential
2.9. Operating Practices
2.10. Replacement / Shutdown Observations

3. NAPHTHA HYDRODESULFURIZATION AND REDISTILLATION
3.1. Process Flow Diagram
3.2. Feedstock
3.3. Unit Flexibility
3.4. Operational Sensitivity
3.5. Product Specifications
3.6. Unit Yields
3.7. Unit Modification Potential
3.8. Capacity Increase Potential
3.9. Operating Practices
3.10. Replacement / Shutdown Observations

4. CATALYTIC REFORMER UNIT
4.1. Process Flow Diagram
4.2. Feedstock
4.3. Unit Flexibility
4.4. Operational Sensitivity
4.5. Product Specifications
4.6. Unit Yields
4.7. Unit Modification Potential
4.8. Capacity Increase Potential
4.9. Operating Practices
4.10. Replacement / Shutdown Observations

5. KEROSENE HYDRODESULFURIZATION UNIT
5.1. Process Flow Diagram
5.2. Feedstock
5.3. Unit Flexibility

5.4. Operational Sensitivity
5.5. Product Specifications
5.6. Unit Yields
5.7. Unit Modification Potential
5.8. Capacity Increase Potential
5.9. Operating Practices
5.10. Replacement / Shutdown Observations

6. GAS OIL HYDRODESULFURIZATION UNIT
6.1. Process Flow Diagram
6.2. Feedstock
6.3. Unit Flexibility
6.6. Operational Sensitivity
6.6. Product Specifications
6.6. Unit Yields
6.7. Unit Modification Potential
6.8. Capacity Increase Potential
6.9. Operating Practices
6.10. Replacement / Shutdown Observations

7. GAS DESULFURIZATION UNIT
7.1. Process Flow Diagram
7.2. Feedstock
7.3. Unit Flexibility
7.4. Operational Sensitivity
7.5. Product Specifications
7.6. Unit Yields
7.7. Unit Modification Potential
7.8. Capacity Increase Potential
7.9. Operating Practices
7.10. Replacement / Shutdown Observations

8. GAS SEPARATION UNIT
8.1. Process Flow Diagram
8.2. Feedstock
8.3. Unit Flexibility
8.4. Operational Sensitivity
8.5. Product Specifications
8.6. Unit Yields
8.7. Unit Modification Potential
8.8. Capacity Increase Potential
8.9. Operating Practices
8.10. Replacement / Shutdown Observations

9. SULFUR UNIT
9.1. Process Flow Diagram
9.2. Feedstock
9.3. Unit Flexibility
9.4. Operational Sensitivity
9.5. Product Specifications
9.6. Unit Yields
9.7. Unit Modification Potential
9.8. Capacity Increase Potential
9.9. Operating Practices
9.10. Replacement / Shutdown Observations

10. PLANT LIMITATIONS
10.1. Unit Capacities
10.2. Product Requirements
10.3. Fuel System
10.4. Steam System
10.5. Electric Power System
10.6. Tankage
10.7. Other Limitations

D. **HEAT CONSERVATION**

1. HEAT TRANSFER PRACTICES

2. UNIT HEAT BALANCES

3. HEAT TRANSFER EQUIPMENT ANALYSIS
3.1. Fired Heaters
3.2. Heat Exchange Trains
3.3. Waste Heat Recovery
3.4. Economics of Increasing Surface Areas

4. STEAM SYSTEM
4.1. Steam Balance and Utilization
4.2. Selection of Pressure Levels
4.3. Condensate System
4.4. Insulation
4.5. Potential Effect of Energy Savings Projects to Steam Balance

5. HEAT REJECTION SYSTEMS
5.1. Cooling Water Systems
5.2. Air Coolers

5.3. Equipment, Piping and Stream Heat Losses
5.4. Recovery Systems
5.5. Tracing and Temperature Maintenance Systems

6. USE OF HOT OIL LOOPS

E. **MECHANICAL DRIVE SYSTEMS**

1. COMPRESSORS / FANS
2. SPECIAL PUMPS
3. ELECTRIC MOTORS
4. STEAM TURBINES
5. SPECIAL EQUIPMENT

F. **MAINTENANCE / MECHANICAL OBSERVATIONS**

1. OVERALL IMPRESSIONS

2. UNIT REVIEW

3. EQUIPMENT CONDITION SUMMARY
3.1. Fired Heaters and Boilers
3.2. Heat Exchangers
3.3. Vessels
3.4. Rotating Equipment
3 5. Steam System
3.6. Piping and Valves
3.7. Instrumentation
3.8. Electrical Equipment
3.9. Corrosion
3.10. Insulation Condition
3.11. Specialty Items

4. MAINTENANCE
4.1. Policies
4.2. History
4.3. Current Practices

G. **ENERGY LOSS MONITORING SYSTEMS**

H. **FUEL SWITCHING / UTILIZATION**

1. REFINERY FUEL SYSTEM

2. GENERAL REVIEW OF COAL USE IN REFINERY SERVICE
2.1. Direct Coal Firing
2.2. Coal Gasification
2.3. Other Technologies

3. COAL AT THE KAUCUK REFINERY
3.1. Availability and Characteristics of Coal
3.2. Potential for Use
3.3. Economics of Use

I. **REFINERY EMISSIONS**

1. SUMMARY OF ENVIRONMENTAL SURVEY
1.1. Refinery Sulfur Balance
1.2. Air Emissions
1.3. Water Quality
1.4. Solid Waste Disposal
1.5. Impact of Maintenance Practices in Generating Emissions
1.6. Evaporation Losses
1.7. Loss of Products to Solvents

2. HANDLING OF MATERIALS
2.1. Tetra-ethyl lead (TEL)
2.2. Aromatics
2.3. Solvents
2.4. Halogenated Hydrocarbons
2.5. Heavy Metals
2.6. Sulfur
2.7. H_2SO_4, HF
2.8. Combustion Products
2.9. Tars

3. MEASUREMENT OF EMISSIONS

4. SPECIFIC RECOMMENDATIONS

J. **ENERGY EFFICIENCY IMPROVEMENTS**

1. IMMEDIATE OPPORTUNITIES
2. MEDIUM TERM OPPORTUNITIES
3. LONG TERM OPPORTUNITIES
4. FURTHER WORK REQUIRED

K. **ENVIRONMENTAL EMISSIONS REDUCTIONS**

1. IMMEDIATE OPPORTUNITIES
2. MEDIUM TERM OPPORTUNITIES
3. LONG TERM OPPORTUNITIES
4. FURTHER WORK REQUIRED

APPENDICES

APPENDIX A. CHARACTERIZATION REPORT REFERENCE / ABSTRACT
APPENDIX B. BENEFITS OF PROCESS SIMULATION
APPENDIX C. CRUDE OIL ANALYSIS
APPENDIX D. TERMS OF REFERENCE
APPENDIX E. ABBREVIATIONS

LIST OF TABLES

Table	Title	Page No.
B.1.1	AVERAGE REFINERY UTILITY CONSUMPTION	B-1
B.1.2	TYPICAL REFINERY TOTAL ENERGY USAGE	B-2
B.1.3	FIRED HEATER OPERATING DATA	B-3
B.2.1	FUEL GAS COMPOSITION VOLUME %	B-6
B.3.1	REFINERY STEAM GENERATION	B-9
C.2.1	CRUDE UNIT INTERMEDIATE PRODUCT CHARACTERISTICS	C-6
C.2.2	TYPICAL CRUDE UNIT YIELDS	C-7
C.3.1	NAPHTHA SYSTEM STREAM CHARACTERISTICS	C-13
C.3.2	NAPHTHA SYSTEM PRODUCT YIELDS	C-14
C.4.1	PRODUCT SPECIFICATIONS	C-19
C.4.1.2	REFORMER INTERNAL STREAM COMPOSITIONS	C-20
C.5.1	KEROSENE HDS UNIT PRODUCT CHARACTERISTICS	C-26
C.5.2	KEROSENE HDS UNIT YIELDS	C-26
C.6.1	GAS OIL HDS UNIT FEED AND PRODUCT CHARACTERISTICS	C-30
C.6.2.	GAS OIL HDS UNIT YIELDS	C-31
C.7.1	GAS DESULFURIZATION UNIT PRODUCTS	C-34
C.8.1	GAS SEPARATION UNIT PRODUCTS	C-38
C.8.2	GAS SEPARATION YIELDS	C-38
D.2.1	REFINERY UNITS UTILITY CONSUMPTION	D-1
AP-A-C.3.1.1	PROCESSING UNITS	AP-A-3
AP-A-C.3.1.2	REFINERY PRODUCT YIELDS	AP-A-3
AP-A-C.3.1.3	OVERALL MATERIAL BALANCE 1990	AP-A-4
AP-A-C.3.1.4	STREAM COMPOSITIONS	AP-A-5
AP-A-C.3.2.1	COMPOSITION OF FUEL GASES	AP-A-8
AP-A-C.3.3.1	CATALYST USAGE	AP-A-10
AP-A-C.3.10.1	LPG (LIQUEFIED PETROLEUM GASES)	AP-A-17
AP-A-C.3.10.2	GASOLINES	AP-A-18
AP-A-C.3.10.3	NAPHTHA FOR STEAM CRACKING	AP-A-19
AP-A-C.3.10.4	JET FUELS	AP-A-20
AP-A-C.3.10.5	DIESEL FUELS	AP-A-21
AP-A-C.3.10.6	FUEL OILS	AP-A-22

LIST OF FIGURES

Figure	Title	Page No.
1	Simplified Process Flow Diagram Atmospheric Distillation Unit	C-3
2	Naphtha Hydrodesulfurization	C-10
3	Naphtha Distillation Column	C-11
4	Catalytic Reformer	C-17
5	Kerosene Hydrodesulfurization	C-24
6	Gas Oil Hydrodesulfurizer	C-28
7	Gas Desulfurizer Unit	C-33
8	Gas Separation Unit	C-37
9	Sulfur Recovery Unit	C-40
10	Crude Oil TBP - Temperature vs. Yield	AP-C-2
11	Crude Oil TBP - Temperature vs. Density	AP-C-3
12	Crude Oil TBP - Temperature vs. Sulfur	AP-C-4
13	Crude Oil TBP - Temperature vs.Viscosity	AP-C-5
14	Light End Analysis	AP-C-6

EXECUTIVE SUMMARY

Early in the year 1991, the United States Agency for International Development (USAID), as an element of its Emergency Energy Program for Central and Eastern Europe, retained the Chicago office of Davy McKee Corporation (DMC) to perform a technical study of the seven refineries that constitute the Petroleum Refining Industry of Czechoslovakia (CSFR). The results of the study are presented on two levels: refinery characterization and selected refinery evaluation. This report covers the results of an audit and evaluation of the Kaucuk Petroleum Refinery in Czecho-Slovakia. Two other refineries, Slovnaft in Bratislava and Kaucuk in Kralupy were also selected for audit and evaluation. A separate report covers the characterization of the Czecho-Slovakian petroleum refining industry. Also, a separate report covers the structure and use of a computerized data base, which has been prepared from the data in the response to a DMC questionnaire issued before the beginning of the field work.

The project started with meetings in early December 1990, between the United States and CSFR energy officials. During the meetings, a plan and schedule were developed for participation by the CSFR in the U.S. Emergency Energy Program.

Three of the national refineries, Slovnaft, Chemopetrol, and Kaucuk were selected for the study of the potential of achieving substantial improvement in energy efficiency and disposal of solid, liquid, and gaseous effluents - both by reduction in volume and method of handling. Order-of-magnitude capital requirements and return on investment associated with identified opportunities form part of these evaluation reports.

The Kaucuk refinery is one of three most important refineries in CSFR. It is a refining and petrochemical complex. In addition to the refinery, there are petrochemical production facilities (butadiene, styrene, SBR, polystyrene, ABS and MTBE) based on raw materials received from Litvinov via pipeline. It is located in an area of high consumption of refinery products, close to Prague, and in an area of many end multiple source users engaged in industrial and agricultural production. Hence Kaucuk was selected for one of the three refineries subject to an evaluation and audit study.

It should be noted that Kaucuk required that DMC sign a Secrecy Agreement prior to release of information to our team. Further, we also signed a similar agreement with UOP of Des Plaines, IL. Each organization required review and approval of a draft report. Such review and approval has occurred.

At the outset of the project, teams were organized for both the characterization and evaluation efforts and consisted of professionals with many years of experience in their respective engineering disciplines. The technical disciplines represented within the team were process, environmental, mechanical, electrical and instrumentation engineering.

The steps for acquisition of data for preparation of this evaluation report were divided into three stages:

- Initially there was a preliminary, or reconnaissance visit to the CSFR during which a rather detailed questionnaire was furnished to the refinery managers.

- The second stage was assembly in Chicago of the DMC team together with the host country consultants for a week of orientation.

- The third stage of the evaluation and audit effort consisted of data collection through meetings with operating managers and engineers of selected process units within the refinery.

The refinery is integrated in one block, separate from the petrochemical production. The in-depth review was oriented to the refinery production block, to study the possibilities of energy consumption improvement and flexibility of equipment in connection with alternative crude oil processing and impact of product on the environment. Off-site facilities were primarily constructed for the refinery and was reviewed from a similar point of view. The maintenance system and power supply was reviewed as a part of the whole complex.

The refinery is part of a petrochemical complex located close to Kralupy, about 25 kilometers north of Prague. This refinery was constructed in stages between 1969 and 1974. the capacity of the refinery is 3.2 million tonnes per year (73 000 BPSD) of mainly Russian export blend crude oil. It is primarily a crude topping type refinery, designed to produce as refinery products only gasoline, jet fuel, diesel and fuel oils, with no bottoms processing at present. (DMC team visit - 27-31 May 1991) The other initial aspect of the refinery is as a prime, or even sole supplier of petrochemical based feedstocks the adjacent petrochemical complex. This type of refinery (hydroskimming), was chosen for installation at this location based on:

- Expectation of a sufficient and long-term supply of Russian crude; and

- Location of the refinery in close proximity to Prague, which is a high consumption area for its products.

The refinery production block includes an atmospheric crude distillation unit, naphtha hydrodesulfurization and redistillation units, kerosene and gas oil hydrodesulfurization units, heavy naphtha reformer unit, gas desulfurization facilities and a gas separation plant. This audit covers the refinery production block. H_2S is converted to elemental sulfur in the Claus unit. The individual units are described in more detail in Section C of this report.

As noted above, the refinery is part of a petrochemical complex, dependent upon raw materials supplied from the steam cracker (450 000 tonnes of ethylene) at Chemopetrol. Petrochemical processes are oriented on C_4 and ethylbenzene processing and ethylbenzene downstream products. Raw materials (C_4 cut, ethylbenzene) are supplied by pipeline. From the feed C_4 fraction there is a butadiene extraction, and MTBE production with the remaining unsaturated C_4's sent to the refinery naphtha HDS unit. Ethylbenzene is catalytically converted to styrene and part of the hydrogen produced in that process is used in the refinery to improve the hydrogen balance. Butadiene and styrene are used for SBR polystyrene and ABS production.

A coal-fired power plant supplies the electricity for the whole complex. Maintenance shops and warehousing support both the refinery and petrochemical facility.

There is a water supply system and wastewater treatment unit. Groundwater is protected from contamination by a system of wells around the whole complex.

The refinery has adequate stores, loading and unloading facilities, (pipelines, railroads, etc.)

During the time of the evaluation, there was excellent cooperation and support provided by the management, as well as the operating and engineering staff. Specific data and information was collected in the following areas the units reviewed:

a) Crude Feedstocks
b) Product Yields and Specifications
c) Operating Conditions and Range of Throughput
d) Mechanical Conditions and Age of Units
e) Utility Consumptions

The following additional information was offered:

a) Overall Utility System Data
b) Effluent Characteristics and Quantity
c) Environmental Regulation

Many energy and process improvements have been reviewed and discussed by the evaluation team and the refinery staff. These opportunities fall mainly into the following areas:

Computer software

The refinery must be able to process different crude oils and predict process conditions and product quality using a process simulation program. Additionally, the refinery has to be able to economically optimize the product split and future operation with different feedstocks using LP models.

The refinery should be able to economize the entire maintenance system through the establishment of a historical data base and network based (CPM) planning. This will aid in improving flexibility and reliability of the equipment and extending the turnaround cycle.

The refinery has the necessary computer hardware needed for running the above mentioned software.

Improved process and equipment control

There are some on-line and off-line (portable) analyzers that may help to improve process control and on-stream time. These include flue gas analyzers, stream composition analyzers, infrared thermal analyzers, corrosion meters, and a wall thickness gauging system that will improve non-destructive corrosion inspection of equipment during operation.

Further, addition of an on-line analyzer to optimize octane value shows a payment of 2.5 years. Improved and closer process control of the gas separation plants will yield improvements.

Training program

Training in project justification and capital budgeting practices is needed.

Major equipment manufacturers offer seminars and courses on how to select, use, and maintain burners and seam traps that will be useful to refinery personnel in improving energy efficiency. These are recommended.

Operations

The Kaucuk Refinery is able to meet all specifications for the products that are prescribed by Czecho-Slovakian standards. Should it be necessary to produce special products for export (exceeding local standards), it could be done without difficulty. Note that the refinery is a supplier of district heating in the local area.

The cooling tower circuit and specifications of the tower needs evaluation as well as repair to insure optimum utility use.

Mechanically, the use of portable thickness and corrosion measurement equipment is suggested. Corrosion coupon installation is also recommended for long term corrosion rate prediction and metallurgy choice determinations.

Electrically, the refinery has a well maintained and designed system which provides for future needs. High efficiency motors should be considered for future use.

The use of critical path planning methods is recommended for turn-around purposes. Note also that we believe that maintenance record keeping needs improvement as well as does the spare parts inventory control system. Further, the formation of a Safety Audit group is recommended

Equipment modifications

There are some equipment modifications that can improve efficiency and reduce total heat consumption. During this refinery evaluation, the following modifications were examined and the following suggestions made:

a) Flue gas / combustion air preheat - (this project in underway by the refineries. We strongly support its completion)
b) Reformer feed / effluent exchanger
c) Hot separator installation in HDS units
d) In-line gasoline blending equipment and instrumentation
e) On-line octane control instrumentation at the reformer

Operating personnel have low turnover and are skilled. Technicians are very competent.

Increased capacity for crude oil storage is needed.

A drier installed in the catalytic reformer recycle line needed in that it will improve on-stream time, yearly product rate and thus profitability will result.

Higher salt content crudes (over 100 ppm) will see the need of a second stage in the desalter.

It is our opinion that the crude oil supply pressure to the crude unit heat exchanger train is too high, resulting in electrical energy loss. This observation is based on computer simulation of the crude characteristics and H.E. Train pressure profile as supplied by the refinery. The refinery operations staff is concerned about and has observed undesired vaporization at lower crude supply pressures and we suspect that the possible addition of slops to the crude is the cause of the vaporization. Further study is needed as the potential to save energy exists.

The refinery staff and management have an on-going energy recovery program, but implementation has been slow due to lack of available funds.

When the total energy consumption, on a unit of heat per tonne of crude throughput is compared to published average U.S. refinery data of 1982, we see that Kaucuk is about 20% better than the U.S. average. It must be noted however, that U.S. refineries have reduced energy consumption about 10% in each 5 year period in recent history, and the 1982 data base needs to be discounted accordingly., Given the range of the published U.S. data, it is our opinion that Kaucuk is a reasonably well run and managed facility with respect to energy utilization. Note also that it was designed as a heat integrated unit. This is not to say that there are not opportunities for improvement. In particular, improvements in minimizing excess oxygen use in fired heaters and installation of flue gas to air preheaters are two areas where cost effective opportunities exist to reduce energy consumption. The refinery, in fact, is proceeding with the air preheater project.

The refinery would like to increase crude capacity from 3.3 to 4.0 million tonnes/y. The crude column is believed to be adequate for this purpose, but the fired heater, pumps and heat exchange train need to be checked. A process simulator would be useful in this task.

Bottoms processing

The Kaucuk Refinery does not have any bottoms processing. All atmospheric residue is sold as a fuel oil. Alternatives such as: vacuum distillation unit, FCC/hydrocracking, atmospheric residue desulfurization, flue gas desulfurization and different combinations of these processes along with adequate downstream units have been evaluated. Bottoms processing in the refinery could reduce the total consumption and finally improve the economy of the refinery.
Note that the power plant within the complex's coal fired (it has not been modified to burn fuel oil). The inability to stockpile, store, or use heavy fuel oil in the summer has resulted in plant shutdowns.

Environmental

Some equipment modifications that will also reduce product losses and improve environmental conditions are:

a) Secondary sealing of tanks
b) Burners and control equipment for the Claus unit

The refinery units appear to be well designed and operated. Very little oil, solids or gaseous emissions are occurring. Two potential long-term improvements were noted:

a) Addition of a Claus tail gas cleanup unit

b) Reinstallation of the chemical feed to the flocculation tank at the wastewater treatment plant (WWTP)

c) Power plant flue gas treatment

However, note that neither (a) or (b) above are not immediately required.

Legislative processes within the country have put in place regulations to limit SO_2 emissions by 1995, or as we have been told, shut down. A two year grace period is allowed if work is in progress.

The SO_2 emitted from the Claus unit was estimated to be 606 tonnes/year at a crude oil rate of 3 million tonnes per year with 1.5 wt% sulfur content. The power plant for the entire complex burns high sulfur brown coal, with SO_2 emissions estimated to be 18 000 tonnes/year.

The WWTP effluent quality is better than called for by current regulations. In fact, it was reported that the effluent water was of a better quality than that of the receiving river. It would not be economical to pump the clean effluent water back to the inlet due to the great distance between the WWTP effluent and the plant intake. The presence of desalter water would also cause a buildup of dissolved salts.

Overall, the refinery is well maintained and managed, reasonably efficient and clean in appearance. The suggestions made here need to be addressed, and in many cases, are recognized by the house staff. The existing programs to optimize operations and minimize energy use have been successful and the staff should be commended for their efforts and encouraged to continue their work.

A. INTRODUCTION

ACKNOWLEDGEMENTS

The Davy McKee Evaluation Team would like to express its gratitude to the management and staff of the Kaucuk Refinery for their excellent cooperation and assistance. Special thanks are due also to the following individuals and the entire personnel in their department.

Miroslav Nevosad	General Manager
Bretislav Karasek	Technical Director
Jiri Tlusty	Chief of Refinery Technology Center

1. OBJECTIVES

It is the objective of this report to present opportunities for energy improvement and reduction of emissions for the Kaucuk refinery in Kralupy, Czechoslovakia. Other defined and specified goals of the study include a consideration of refinery operating flexibility, an evaluation of fuel switching including the use of coal as a substitute for energy supply, and an observation of the plants general condition and of its maintenance practice for its effect on operations. It is a further objective to characterize the modifications for achieving expected benefits in accordance with the magnitude of effort and capital requirements anticipated.

A summary of the stated USAID objectives of this study is as follows:

- To identify changes in operating practices and low-cost modifications to equipment that can be immediately implemented to increase the efficiency of energy utilization, to conserve energy by avoiding unjustified use, and to reduce as far as practical undesirable gaseous, liquid, and solid effluents.

- To identify, characterize, and recommend more-extensive changes in practices and equipment and modifications to the process units, which appear justifiable but at the same time require further study possibly with inputs that may not yet be available.

- To assist the management of each refinery selected in each country, as needed, in the implementation of the changes identified above through on-the-spot assistance (including training sessions for refinery personnel).

This report details the results of the Evaluation & Audit Study. The recommendations of this study to improve energy utilization operations (yields, practices, etc.) and environmental conditions are categorized as follows:

1. Immediate minimum cost recommendations: This category covers no cost to low cost modifications to the refinery that will be relatively inexpensive and easy to implement with internal refinery resources.

2. Short term intermediate cost recommendations: This category includes modifications and/or additions to the refinery that will be characterized by costs related to equipment purchases, and/or changes to process operating conditions that could be considered significant. Implementation requires outside resources and appropriate justification.

3. Long term substantial cost recommendations: This category characterizes primarily by significant modifications to current processing capabilities, or installation of additional process units to improve the refiner's competitive refining position into the 21st century. Implementation of this type of recommendation would be potentially expensive and time consuming and requires outside resources and justification.

2. REFINERY SELECTION

Kaucuk refinery is one of the three most important refineries in CSFR. It is a refining and petrochemical complex. In addition to the refinery, there are petrochemical production facilities (butadiene, styrene, SBR, polystyrene, ABS and MTBE) based on raw materials received from Litvinov via pipeline. It is located in an area of high consumption of refinery products, close to Prague, and in an area of many end multiple source users engaged in industrial and agricultural production. The refinery is integrated in one block, separate from the petrochemical production. The in-depth review was oriented to the refinery production block, to study the possibilities of energy consumption improvement and flexibility of equipment in connection with alternative crude oil processing and impact of product on the environment. Off-site facilities were primarily constructed for the refinery and was reviewed from a similar point of view. The maintenance system and power supply was reviewed as a part of the whole complex.

3. SUMMARY OF FIELD ACTIVITIES

The Davy McKee Corporation evaluation of the Kaucuk Refinery took place over a two-week period from 10 - 22 June 1991. The evaluation team consisted of the following: Mr. Thomas Dempsey, Electrical and Instrumentation; Mr. George Hamilton, Mechanical; Mr. Rupo Paul, Process Engineer; Mr. Jan Zapletal, a Czech consultant with extensive in-country refinery experience who also provided translation

where needed; Dr. Eva Kostelkova a Czech consultant who provided administrative and translation services; Mr. Robert Jurish, Refinery Process Engineer and evaluation team leader and P.D. Agrawal, Project Manager. The content of this report is enhanced through the insights, experience and personal knowledge of our in-country consultant.

The program for the evaluation was discussed and agreed upon with the General Director of Kaucuk and the refinery management. The in-depth review was confined to the refinery production block and connected off-site facilities. The maintenance system and power plant were reviewed as part of the whole complex. The evaluation was done in close cooperation with refinery management, team members and refinery personnel reviewing design and process documentation, within the context of the following areas:

- Energy consumption improvements;
- Flexibility of the units and impact of crude oil changes; and
- Reduction of environmental impact of production on the atmosphere.

Potential solutions were discussed and agreement or at least understanding reached with the refinery personnel on technical aspects.

For the environmental evaluation, the facility was visited by Environmental Engineer, Mr. Charles Best on 30 July 1991 for one day. Two refinery process engineers, a wastewater chemist, the solid waste incinerator operator and the Chief Environmental Control Engineer were interviewed relative to an environmental survey previously submitted by Mr. Best. No pollution measurements were made or observed.

4. REFINERY DESCRIPTION

The Kaucuk Refinery developed as a hydroskimming type of refinery designed to produce as refinery products only gasoline, jet fuel, diesel and fuel oils. The other initial aspect of the refinery is as a prime, or even sole supplier of petrochemical based feedstocks the adjacent petrochemical complex. This type of refinery (hydroskimming), was chosen for installation at this location based on:

- A sufficient and long-term supply of Russian crude was expected; and
- The refinery is located in close proximity to Prague, which is an area of high consumption of its products.

10

The refinery production block includes an atmospheric crude distillation unit, naphtha hydrodesulfurization and redistillation units, kerosene and gas oil hydrodesulfurization units, heavy naphtha reformer unit, gas desulfurization facilities and a gas separation plant. H_2S is converted to elemental sulfur in the Claus unit. The individual units are described in more detail in Section C.

The refinery is part of a petrochemical complex, dependent upon raw materials supplied from the steam cracker (450 000 tonnes of ethylene) at Chemopetrol. Petrochemical processes are oriented on C_4 and ethylbenzene processing and ethylbenzene downstream products. Raw materials (C_4 cut, ethylbenzene) are supplied by pipeline. From the feed C_4 fraction there is a butadiene extraction, and MTBE production with the remaining unsaturated C_4's sent to the refinery naphtha HDS unit. Ethylbenzene is catalytically converted to styrene and part of the hydrogen produced in that process is used in the refinery to improve the hydrogen balance. Butadiene and styrene are used for SBR polystyrene and ABS production.

A coal-fired power plant supplies the electricity for the whole complex. Maintenance shops and warehousing support both the refinery and petrochemical facility.

There is a water supply system and wastewater treatment unit. Groundwater is protected from contamination by a system of wells around the whole complex.

The refinery has adequate stores, loading and unloading facilities, (pipelines, railroads, etc.)

5. TYPES OF ENERGY IMPROVEMENT OPPORTUNITIES

Many energy and process improvements have been reviewed and discussed by the evaluation team and the refinery staff. These opportunities fall mainly into the following areas:

Computer software

The refinery must be able to process different crude oils and predict process conditions and product quality using a process simulation program. Additionally, the refinery has to be able to economically optimize the product split and future operation with different feedstocks using LP models.

The refinery should be able to economize the entire maintenance system through the establishment of a historical data base and network based (CPM) planning. This will aid in improving flexibility and reliability of the equipment and extending the turnaround cycle.

The refinery has the necessary computer hardware needed for running the above mentioned software.

Improved process and equipment control

There are some on-line and off-line (portable) analyzers that may help to improve process control and on-stream time. These include flue gas analyzers, stream composition analyzers, infrared thermal analyzers, corrosion meters, and a wall thickness gauging system that will improve non-destructive corrosion inspection of equipment during operations.

Training program

Major equipment manufacturers offer seminars and courses on how to select, use, and maintain burners and steam traps that will be useful to refinery personnel in improving energy efficiency.

Equipment modifications

There are some equipment modifications that can improve efficiency and reduce total heat consumption. During this refinery evaluation, these modifications were examined and the following suggestions made:

a) Flue gas / combustion air preheat

b) Reformer feed / effluent exchanger

c) Hot separator installation in HDS units

d) In-line gasoline blending equipment and instrumentation

e) On-line octane control instrumentation at the reformer

The refinery would like to increase crude capacity from 3.3 to 4.0 million tonnes/y. The crude column is believed to be adequate for this purpose, but the fired heater, pumps and heat exchange train need to be checked. A process simulator would be useful in this task.

Some equipment modifications that will also reduce product losses and improve environmental conditions are:

a) Secondary sealing of tanks

b) Burners and control equipment for the Claus unit

Bottoms processing

The Kaucuk Refinery does not have any bottoms processing. All atmospheric residue is sold as a fuel oil. Alternatives such as: vacuum distillation unit, FCC/hydrocracking, atmospheric residue desulfurization, flue gas desulfurization and different combinations of these processes along with adequate downstream units have been evaluated. Bottoms processing in the refinery could reduce the total consumption and finally improve the economy of the refinery.

6. TYPES OF ENVIRONMENTAL EMISSION IMPROVEMENTS

The refinery units appear to be well designed and operated. Very little oil, solids or gaseous emissions are occurring. Two potential long-term improvements were noted:

a) Addition of a Claus tail gas cleanup unit

b) Reinstallation of the chemical feed to the flocculation tank at the wastewater treatment plant (WWTP)

c) Power plant flue gas treatment

However, note that neither (a) or (b) above are not immediately required.

The SO_2 emitted from the Claus unit was estimated to be 606 tonnes/year at a crude oil throughput of 3 million tonnes per year with 1.5 wt% sulfur content. The power plant for the entire complex burns high sulfur brown coal, with SO_2 emissions estimated to be 18 000 tonnes/year. Therefore, a Claus unit tail gas cleanup plant is second priority behind the power plant SO_2 cleanup.

The WWTP effluent quality is better than called out by current regulations. In fact, it was reported that the effluent water was of a better quality than that of the receiving river. It would not be economical to pump the clean effluent water back to the inlet due to the great distance between the WWTP effluent and the plant intake. The presence of desalter water would also cause a buildup of dissolved salts.

B. REFINERY ENERGY BALANCE

1. OPERATING UNIT ENERGY USE

The purpose of this refinery heat balance is to evaluate:

- The heat required for the crude oil processing and compare it to similar units.
- The heat recovered and the level of overall heat economy (conservation)
- Heat rejection
- Possibilities and conditions for heat recovery to reduce energy consumption
- Economic feasibility within local parameters and pricing

For the refinery heat balance, measured data have been used. The average actual consumption is as shown below in table B.1.1.

TABLE B.1.1 - AVERAGE REFINERY UTILITY CONSUMPTION*

	Refinery Process Units	Refinery Facilities (bldgs., misc tracing etc.)
Fuel	0.9940 GJ/tonne	1 800 GJ/month
Steam 0.65 MPa	0.0465 GJ/tonne	Winter 69 000 GJ/month Summer 29 000 GJ/month
Steam 1.6 MPa	0.0679 GJ/tonne	1 000 GJ/month
Electric power	0.0190 MWh/tonne	200 MWh/month
Cooling water	4.7 m^3/tonne	--------
River water	0.02m^3/tonne	Summer 70 000 m^3/month Winter 40 000 m^3/month

* Utilities consumption is calculated per metric ton of crude oil for all refinery units together.

To compare the utility consumption of Kaucuk Refinery with that for a typical western refinery, the utility figures were converted to kcal per tonne of crude oil processed. The total energy consumption for Kaucuk shows 283 000 kcal/tonne of crude.

To compare this figure, the same refinery configuration has been assembled using data from "Hydrocarbon Processing, July 1982". The published data for some units fluctuate through a very wide range. Average and minimum energy usage figures extracted from this source are presented in Table B.1.2. Data shown is per tonne of feed to the named unit.

TABLE B.1.2 - TYPICAL REFINERY TOTAL ENERGY USAGE

Unit	Total Energy (kcal/tonne of feed) Average	Total Energy (kcal/tonne of feed) Minimum	Capacity million tonnes/yr	kcal/yr x 10^{11} Avg.	kcal/yr x 10^{11} Min.
Crude distillation	170 000	110 000	3.27	5.559	3.597
Naphtha Hydrotreating	200 000	200 000	0.624	1.248	1.248
Kerosene Hydrotreating	200 000	200 000	0.344	0.688	0.688
Gas Oil Hydrotreating	210 000	200 000	0.830	1.743	1.66
Catalytic Reforming	500 000	490 000	0.330	1.650	1.617
Gas Desulfurization (per tonne of sulfur)	3 685 000	3 635 000	0.008	0.2948	0.2948
Gas separation	165 000	165 000	0.122	0.2013	0.2013
Sulfur unit (per tonne of sulfur)	-1 070 000	-1 070 000	0.008	-0.0856	-0.0856
TOTAL				11.2985	9.22

$$\frac{\text{Average Energy Consumption}}{\text{Tonne crude}} = \frac{11.2985 \times 10^{11}\ \text{kcal/yr}}{3.27 \times 10^{6}\ \text{Tonnes/yr}} = 345\ 520$$

$$\frac{\text{Minimum Energy Consumption}}{\text{Tonne crude}} = \frac{9.22 \times 10^{11}\ \text{kcal/yr}}{3.27 \times 10^{6}\ \text{Tonnes/yr}} = 281\ 970$$

15

Thus, total energy consumption in an assembled refinery of the same profile, as Kaucuk shows an average of 345 520 kcal/tonne of crude and 281 970 kcal/tonne minimum.

The comparison shows that the Kaucuk refinery in 1990 an energy consumption of 283 000 Kcal/tonne of crude is slightly higher than the minimum as calculated above, based on published 1982 factors and about 20% better compared to average figures. This can be explained by the fact that Kaucuk has closely heat integrated it's units (without heat loss from intermediate feed day tanks). The literature data shown are for individual units (from tank to tank). Note that the heat consumption in western refineries has been reduced about 10% in each 5 year period, thus the 1982 data needs to be discounted accordingly.

Another method of evaluation of the heat use efficiency is to follow rejected heat from the process and determine recovery possibilities.

The majority of rejected heat leaves from:

- Flue gases from the process furnaces
- Cooling water system
- Air coolers
- Product to storage

To evaluate the first of these major rejected heat streams, the temperatures and excess air in process furnaces were measured and the results are shown in the following table:

TABLE B.1.3 - FIRED HEATER OPERATING DATA

Value	Crude Unit Furnace		Naphtha HDS Furnace	
	1/1	1/2	H1	H2
Temperature, °C	274	272	229	295
O_2 content in flue gas, vol%	3.8	3.7	4.8	6.5
Heat duty, GJ/h	94.2	94.2	32.2	29.0

TABLE B.1.3 - FIRED HEATER OPERATING DATA - continued

Value	Reformer Furnace			Kerosene HDS Furnace		Gas Oil HDS Furnace	
	Section 1	Section 2	Section 3	1	2	1	2
Temperature, °C	265	290	290	270	290	287	310
O_2 content in flue gas, vol%	6.5	6.5	6.5	6.5	7.0	6.0	7.2
Heat duty, GJ/h	97.4			11.6	8.4	18.4	18.9

A project for heat recovery for combustion air preheat from furnace flue gas at the crude distillation and naphtha hydrotreating units is in the implementation stage (preliminary engineering is completed and firm quotes received). The other furnaces in the refinery are also being evaluated for flue gas to air preheater projects.

The cooling water system is used to remove low level heat (after the process heat exchangers or air coolers). This heat rejection may be partially reduced by using hot separators in the HDS units.

The results of the evaluation of the heat consumption in Kaucuk Refinery may be summarized as follows:

- It is a hydroskimming type of refinery with good energy integration in the downstream units.
- In comparing energy consumption in the refinery in 1990 with data published in a 1982 Hydrocarbon Processing magazine article, it is about the same compared to the best data and about 20% better than the average.
- There are projects under evaluation to improve heat recovery and reduce total energy use. They are:

  a) flue gas/combustion air preheat
  b) hot separators in the HDS units
  c) better instrumentation to reduce excess oxygen in flue gas

- Implementation of the above projects will depend on the availability of funds.

It is clear that a more in-depth study is needed to evaluate and offer solutions to the above.

2. FUEL SYSTEM

The refinery has been designed and equipped to fire heavy fuel oil and refinery off-gas. All necessary equipment is in place and being used with all fired heaters are currently fired with gaseous fuel. The lack of summer markets for fuel oil has caused the refinery to shut down in the warm weather due to lack of storage.

2.1 Fuel Sources

Fuel gas used in the refinery is a mixture of refinery gas (C_2 and lighter, mainly the overhead stream of the absorption column in the gas separation plant) and natural gas imported into the refinery. The mixture consists of 40% refinery gas and 60% natural gas by weight. The composition of these gases (volume %) is as follows:

TABLE B.2.1 - FUEL GAS COMPOSITION VOLUME %

Component	Refinery Gas	Natural Gas
H_2S	0.01	15 ppm
CO_2	-	0.25
N_2	-	0.85
H_2	70.0	-
C_1	14.39	97.50
C_2	13.5	0.90
C_3	1.1	0.30
C_4	0.4	0.08
n-C_4	0.4	0.08
C_5	0.2	0.02
C_6+	-	0.02
Total	100.00	100.00

2.2 Fuel Distribution

The refinery gas is routed to a fuel gas drum. Natural gas is mixed from the pipeline (after pressure reduction) into the refinery gas and burned as a mixture. There is a piping network and control system supplying individual burners. As noted earlier, heavy fuel oil is an alternate source of fuel.

2.3 Fuel Users

Refinery furnaces are gas-fired using the fuel gas system described above. The same gas is also used in the pilot for the flare.

3. STEAM SYSTEM

3.1 Steam Generation

The power station, while part of the Kaucuk complex, belongs to the complex's energy division and does not report to the refinery or chemical plant management.

The station itself consists of coal-fired boilers, steam turbine driven generators and coal handling equipment. The coal (with a heating value of 10.5 Megajoules/kg) comes from west Czechoslovakia and arrives at the power station by unit train. Annual usage is about 800 000 tonnes. The coal is dumped from the hopper cars and bull-dozed directly to grizzly conveyor feed chutes. Twin transit conveyors are fed and the operator opts to feed the coal storage bins in the powerhouse or reject surge from the train to a location some 50 to 100 meters remote from the main storage pile. Conveyance of surge is by bulldozer to the main storage pile. Coal may be handled as many as four times before reaching the coal storage bins. On one occasion, three dozers equivalent to Cat D-9's were counted engaged in handling and rehandling coal. The coal is moved to the boiler feed bins by conveyor belt. From the feed bin, the coal is pulverized to a powder and blown into the furnace by the forced draft fan. There is an electrostatic filter on the flue gas for particulate emissions removal.

In the main station there are four 125 tonne/h boilers producing 9.6 MPa, 540 °C (1 411 psi, 1004 °F) steam. One boiler is presently being rebuilt. A six-stage evaporator is used to make distilled water for generating high pressure steam. The two steam turbines were domestically built by Prvni Brnenska Strojirna. Their name plate data is 30 MW, 9.0 MPa, 535 °C (995 °F) steam at the inlet and 3 000 rpm.

Also at the power station site are two small Yugoslavian built (Babcock licensee) twin-burner boilers. The boilers are each rated at 25 tonne/h and generate 1.6 MPa, 230 °C (235 psi, 446 °F) steam. One boiler is fired by butane while the other has combination burners firing both butane and fuel oil. Flame detection is by a Honeywell "Fire-eye". Oxygen in the flue gas is measured with a Taylor "Servomex" oxygen analyzer. The butane to each boiler is measured with a "Aeva Metro" PD meter.

There is also a rotary kiln incinerator that generates 18 tonnes/h of 1.6 MPa steam. The feed to the incinerator is mostly plastic scrap and oily wastes.

3.2 Steam Levels

The following steam systems are used in the Kaucuk complex:

- 9.6 MPa — Used only as inlet steam to the power station's two turbogenerators.
- 1.6 MPa — Produced in two small boilers, rotary kiln incinerator and the reformer furnace.
- 1.0 MPa — Extracted from the main power station's steam turbines.
- 0.6 MPa — Produced as waste heat recovery in the reformer furnace, kerosene and gas oil HDS furnace and on the Claus unit.
- 0.25 MPa — Obtained by back pressuring the power station's turbogenerators.

Partial condensing is used, about 20 to 60 tonnes/h is condensed. Desuperheating is only done to supply emergency steam. No cooling tower is used in power generation as condensing is done with river water with the warm water returned directly to the river.

Steam generation is used to recover part of high level waste heat. There are steam generation facilities within the reformer furnace and kerosene, gas oil and sulfur production units. Stripping steam is superheated in the convection section of the furnaces. Steam produced is used within the refinery. The steam distribution system of the refinery is connected to the system of the whole complex. The steam generation is indicated on the following table:

TABLE B.3.1 - REFINERY STEAM GENERATION

Unit	Pressure MPa	Temperature °C	Quantity tonnes/h
Reformer heater	1.6	240	7.5
Reformer heater	0.6	190	4.2
Kero, gas oil HDS	0.6	190	9.0
Claus unit (sulfur)	0.6	140	1.0

3.3 Steam Users

Steam at the various pressure levels is metered at the power station and goes to the refinery. It is metered again at the refinery complex and at the OSBL facilities.

The refinery uses steam for the following purposes:

- Heating medium for reboilers
- Process stripping steam (after superheating in the process furnaces)
- Atomizing steam for furnace burners using heavy fuel oil
- Equipment and line heating for freeze protection and heat maintenance
- For building heat and for generating hot water
- Spot and intermittent utilization for fire fighting, steam curtains and snuffing steam

4. ELECTRIC POWER SYSTEM

4.1 Electricity Sources / Generation

The power station at Kaucuk is located about one-half kilometer southeast of the refining complex. It is a cogeneration plant with two turbogenerators. For steamside details, see section B.3.1. The station's two generators were both domestically built by Skoda and both carry the following nameplate ratings: 30 MW, 37.5 MVA, 6.3 kV ± 5%, 3 440 amps, 0.8 PF and 3 000 rpm. The exciters produced 42 - 165 volts at 226 to 642 amperes.

22

About one-half of the generated power (30 MW) is used in the refinery/chemical plant complex. The other half is transformed up to 110 kV and exported to the national power grid. About 10 MW of emergency power is available from the national grid to Kaucuk. The power factor for the station runs about 0.85. The control board and panel instrumentation are basically recorders and indicators, while station control is basically manual.

4.2 Electric Distribution System

At the power station, the generated voltage level is 6 kV. This voltage is used for plant distribution. Two sets of dual 6 kV feeders are run in cable tray and underground to the two motor control centers (MCCs)/substations that serve the refinery. One MCC is located just south of the southwest corner of the combination unit refining complex, while the other is just south of the southeast corner. The MCC feeder cable runs are well under 1 km and the resulting I^2R losses are low. Also, the refinery practice to power motors 160 kW (215 hp) and over at 6 kV contributes to low I^2R losses and good voltage regulation.

The 6 kV buses in the MCC/substations are the dual section type with a feeder supplying each section and a normally open tie breaker connected between the two sections. Both feeders and breakers are rated to supply the entire substation. The tie breaker closes automatically upon loss of either feeder, but not upon a bus failure-induced tripping of a feeder breaker. This is to prevent closing the tie breaker into a fault.

In summary, Kaucuk's electrical distribution system has a sufficient transmission voltage level for the refinery's transmission distances to hold distribution losses to reasonable levels. The system also has the security and redundancy to provide the level of electric power continuity needed for process units in a refinery with all electric drives.

4.3 Electric Power Users

In the refinery, electric power is used for the following:

- Electric motors
- Refinery lighting
- Desalting
- Instrumentation
- Communication equipment
- Other electronic equipment
- Power for welding machines
- Minor electric heating

One of the two motor control centers is located southwest of the refining complex. It powers one-half of the refining complex. The under 6 kV electrical equipment is fed by five 1 MVA power transformers and one 250 kVA lighting transformer. Each transformer feeds a line up of switch gear. The power transformer's secondary (380 volts) is fed to the incoming cubicle of the switch gear line up. This cubicle contains a breaker, overload relay, CTs, line switch, ammeter, power factor meter, voltage meter, MWh meter and breaker operation counter.

The motor starter cubicles contain one to eight motor starters. Contactor relays are used for line currents to 150 amperes and breakers for ratings above 150 amps. The motor starters use fuses for instantaneous protection and overloads for time protection. The low-voltage relays have a two second time delay. There is a transfer switch between the switchgear lineups for emergency use, such as a transformer failure.

The MCC also contains two capacitor banks with automatic power factor (PF) controllers. The refinery said the PF controllers were high maintenance items and the capacitor banks are normally run manually and switched under the direction of the power station. The 250 kVA lighting transformer is connected to a 220 volt bank of switchgear. It's incoming cubicle is similar to that used in the 380 volt equipment. The lighting feeders are fused and switched. There was an emergency lighting transfer switch with a battery bank supplying the 220 volt emergency lighting power.

The 6 kV electrical switchgear is housed in a separate section of the MCC under special lock and key. The incoming cubicle in the 6 kV line up contains current and potential transformers, differential current relay, overload current relay, instantaneous current relay, ground fault relay, ammeter and volt meter. The motor starter cubicles contain current transformers, time over current relays, instantaneous relays, differential current relays, under voltage relay (2-second time delay) and an ammeter. Also present is a high pressure oil-filled breaker. The transformer cubicles contain current transformers, time over-current relays, instantaneous current relays, a ground fault relay and a high pressure oil-filled breaker.

The second MCC, which is located southeast of the refining complex is, for all practical purposes, a duplicate of the first MCC.

5. COOLING WATER SYSTEM

The refinery has a dedicated cooling water system with the water being drawn from the river. The circulating volume is 3 241m^3/h and makeup is supplied at approximately 80 m^3/h. The cooling water is normally treated, filtered and after use is treated before discharge. The natural draft cooling tower that serves the refining complex has a current design temperature drop of 10 °C (18 °F). On warm summer days, the refinery staff is satisfied with a 6 °C temperature differential.

A separate system utilizing two pumps rated at 174 cubic meters per hour draws water from the cooling tower make-up reservoir for the LPG unit. This allows the LPG unit in the summer, when the river water is cooler than the refinery cooling water, to use the river water to increase their LPG recovery.

The power station and the older parts of the chemical plant use river water on a "once-thru" basis, returning the warm water to the river.

6. AIR COOLERS

As is typical with U.S. refineries, Kaucuk's older units have air coolers only where they were installed during revamps. For these units, a major problem at times, is to find space for their installation while still maintaining reasonable pipe run lengths.

Some of the air coolers showed evidence of uneven flow patterns. The refinery thought that this was due to problems they had in setting the louvers and were looking at modifying the louver adjustment mechanism. To save energy, the operators shut down individual cooler fans as ambient conditions permit.

There are presently no means to change blade pitch or motor speeds on the air coolers, so only large step changes can effectively be made in the cooling. See D.5.2 for more information on air coolers.

7. ENERGY RECOVERY SYSTEMS

The refinery has been on an energy recovery program for some time, but has been stalled in its implementation phase by the availability of capital. The following energy recovery systems were observed:

Furnace air preheaters

The recovery of flue gas heat by preheating combustion air is in the design stage for the crude unit and the naphtha HDS furnaces. Preheaters for the remaining process furnaces are under evaluation.

Waste heat recovery units

Steam generation is used to absorb part of the higher potential waste heat. There is steam generation in the reformer furnaces, the kerosene and gas oil HDS furnaces and the sulfur plant Claus unit. The steam generation is as shown in Table B.1.4.

In addition, steam used for stripping service is superheated in the convection sections of the process furnaces.

Product heat recovery

The refinery has made liberal use of heat recovery from hot product streams through the use of product to feed heat exchangers or other uses of this heat source as appropriate.

Low level heat recovery

Low pressure steam and hot water from the overall complex are used to provide hot water and heat for the refinery's buildings, adjacent employee housing and about one-half of the town of Kralupy.

Other comments

The refinery has lowered operating unit system operating pressures as an energy savings means.

C. REFINERY FLEXIBILITY

1. OVERVIEW

The refinery was designed and built solely to process Russian crude oil of known and essentially constant composition. The refinery has many years of experience processing this material. Over the years, and most notably in the last year, sulfur and salt content of the feedstock have increased though the levels are still within the contractual limits. The problems caused by the increased levels of sulfur and salt were effectively managed. Changing, more stringent product specifications, i.e. reduced lead content in gasoline and reduced sulfur content in diesel, were also managed due to built in flexibility of the affected process units.

The capacity of the refinery has been tested and on average it varies between 65 and 110% of the nameplate capacity (more details are found in individual unit comments). Some limitations of the refinery have been partly overcome by revamping the reformer unit and using a more active catalyst within the HDS units.

Some units have not been fully loaded (i.e. the kerosene HDS and gas processing unit) and this space capacity has been used to saturate and process part of the C_4's remaining after MTBE production. Energy reduction measures have been undertaken (more active catalyst in HDS, pressure reduction in gas separation unit) and others are under evaluation (flue gas/combustion air preheat, HDS hot separator).

The normal sequence of flow of hydrogen rich gas from the reformer is through the naphtha gas oil and kerosene HDS units, in that order.

To reduce air pollution, heavy fuel oil fired within the refinery has been replaced by natural gas. Replacement of an out-of-date safety system in the Claus unit may help to reduce SO_2 emissions further.

Changing crude oil may require changes in operating practices and needs. The extent of necessary changes due to the feedstock depend primarily on the properties of the crude oil that will be selected to be processed. There is some flexibility in the existing units.

Acquisition of a computer simulation program and LP model would be an extremely useful tool for the refinery when crude oil properties change. It is almost axiomatic that modifications will be required as new crudes are introduced.

Within the evaluation of the refinery, many problems and possible solutions have been discussed and suggested. There is, however, one vital problem of the refinery and that is the atmospheric residue processing. Many alternatives have

been considered. This is a complex inter-related problem that requires both technical and economic evaluation of all process units within the refinery and associated facilities. Depending on the crude or crudes selected, changes may simply involve switching heat exchanger surface. Higher salt content crudes (over 100ppm) will see addition of a second stage in the desalter.

2. ATMOSPHERIC DISTILLATION UNIT

2.1. Process Description

A process flow diagram of the atmospheric distillation of crude oil is shown on Figure No. 1. In atmospheric distillation, the following operations take place:

- Crude oil is preheated using pumparound heat from the atmospheric column and products. Crude oil analysis is shown in Appendix C.
- Desalting and dewatering of crude oil from about 50 ppm to about 5 ppm salt and 0.1 wt% water.
- Final heating of crude oil in a fired heater to flash zone temperature. The furnace is also used to superheat stripping steam by heat recovery from the flue gas.
- Atmospheric distillation of crude to its respective products.
- Reboiler for the redistillation of naphtha using hot gas oil product from the atmospheric distillation system.
- Redistillation of hydrodesulfurized naphtha.

2.2 Feedstock

The refinery currently processes a 32.0 °API crude oil supplied by pipeline from the USSR (analytical data is contained in Appendix A). Standard analysis reports indicate sulfur at 1.5 wt%. The sulfur content of the crude increased to the 1.8 to 1.9 wt% range during calendar year 1990. The existing hydrodesulfurization units were able to handle the increasing sulfur content of the feed without an increase in the sulfur content of the products. The major problem is with the fuel oil quality, in that the refinery processing places its fuel oil production at the limit of 3 wt% sulfur in heavy fuel oil, which is the local specification value on maximum sulfur content.

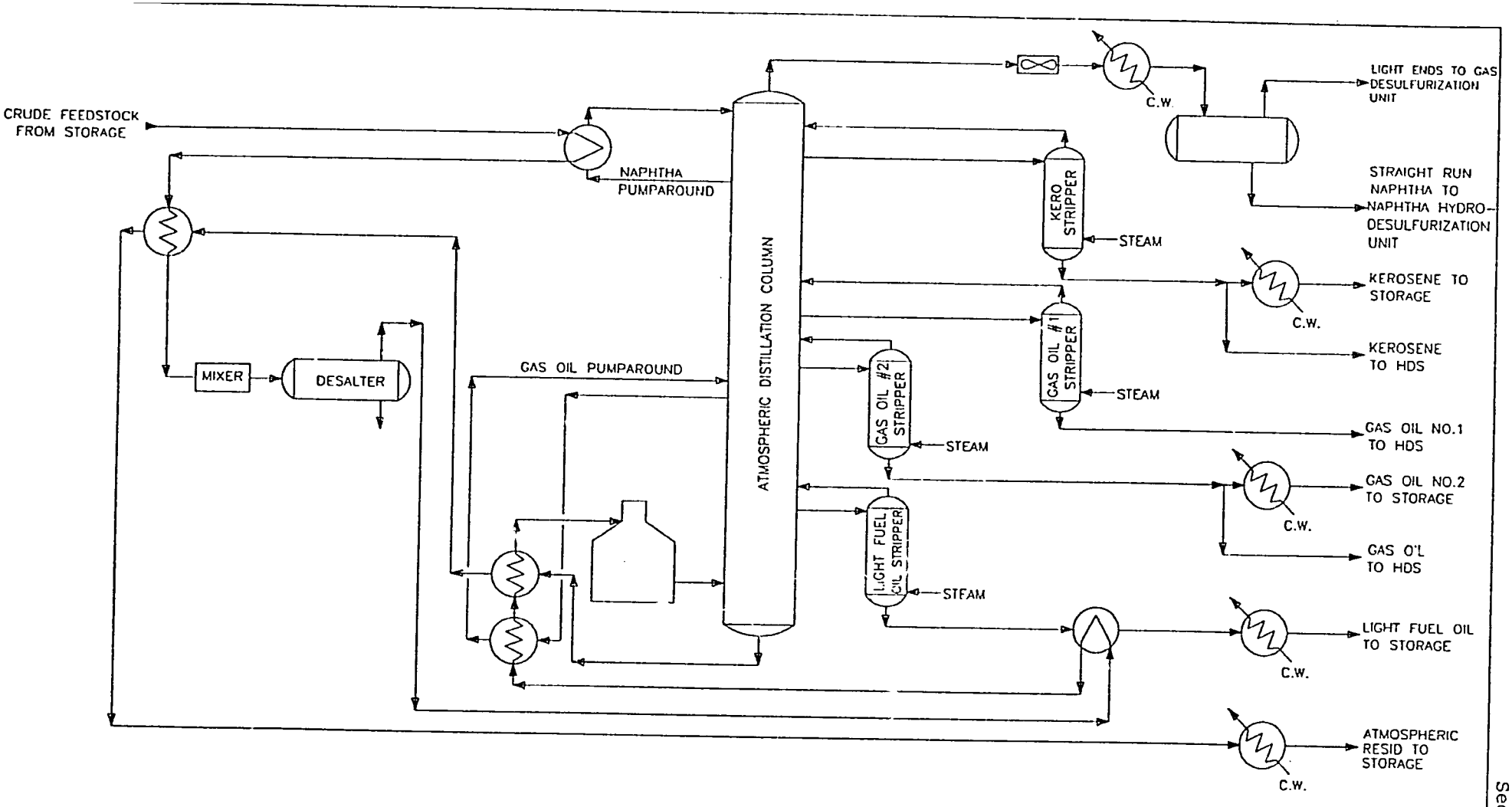

Figure 1

DATE	REV	BY	APPR	DESCRIPTION
10/15/91	A	T.G		FOR EVALUATION REPORT

Davy McKee Corporation
CHICAGO ILLINOIS

KAUCUK REFINERY
KRALUPY, CZECHOSLOVAKIA

SIMPLIFIED PROCESS FLOW DIAGRAM
ATMOSPHERIC DISTILLATION UNIT

DWG. No. 20[illegible]3-22-03-101 A

2.3 Unit Flexibility

The range of capacity of the crude distillation unit is controlling for the whole refinery. Experience shows that the crude unit can run between 250 and 420 tonnes/h, which is about 65% to 110% of the nameplate capacity.

The crude unit has been run up to an instantaneous rate of 3.4 million tonnes/y (420 tonnes/h). At this time, the limiting factor was the inability to process downstream products, especially gas oil. The crude tower overhead condenser also is limiting at high feed rates and hot summer conditions. Further, the instrumentation control was not sensitive to variations in operations at the high feed rate as the unit was run with open bypasses around the control valves. It is believed that a reasonable maximum level of operation is 420 tonnes/h. There were no furnace or steam stripping problems at high flow. The second pumparound (PA) pump could not handle the full PA and gas oil load.

At low feed rates, about 250 tonnes/h, a poor kerosene/naphtha split was reported as well as wild swings in the top column temperature.

2.4 Operational Sensitivity

Operational sensitivity has been evaluated for the following changes in the operation:

- Crude composition
- Crude charge rate
- Product split
- Product specifications

<u>Crude composition</u>

To date, there has been no useful experience with processing of different crude oils because there has been no opportunity to obtain these in sufficient quantity and purity in order to be able to evaluate the results. Very small quantities of different crudes were added and mixed with the Russian crude. Within the last year, there has been an increase in sulfur content in the Russian crude, to 1.8 - 1.9 wt%. A higher sulfur content caused an increase of sulfur in the distillates and residual products, though the major problem was with the heavy fuel oil quality. Sulfur levels for the heavy products were greater than 3 wt% and therefore exceeded specifications. The Kaucuk Refinery is very vulnerable from this point of view because they have no vacuum distillation and residual processing capability. Further, even the power plant of the complex is coal-fired (it has not been modified to burn fuel oil) with the result that there are reduced operations or shutdowns in summer due to inability to stockpile heavy fuel oil product until market demand rises.

Generally speaking, the Kaucuk Refinery can process any similar sulfur-containing crude, but a crude oil of different quality than that for which the unit was designed may limit its capacity. To be able to predict process operations and product specification changes with a change of crude oil, a computer based process simulation program will be a very useful tool. Some of the expected crude oils have already been analyzed and there is data available to run the simulation.

Crude charge rate

Crude oil storage capacity is relatively low (6 tanks at 31 000 cubic meters each) as continuous crude oil supply was expected. The crude oil feed rate (for the Russian crude) has been varied (250 to 420 tonnes/h) without any problems. Exceeding this limit could result in problems with the control valves and heat transfer. In the case of different crude oil feedstocks, the quality of products would likely be affected by a change.

Product split

The typical crude unit product split is shown in Section 2.6. There is no operating experience with the shift of product splits that may arise from a changed crude oil composition it is important to note that a product split change must be evaluated for the refinery as a whole because of integration of downstream units.

Product specifications

Final product specifications are determined by Czechoslovak standards and are obligatory for all producers. There is a possibility that standards will become tighter as the CSFR moves to improve product quality. The temporarily higher sulfur in the crude and heavy fuel oil is pushing the refinery to its limit to comply with present standards.

2.5. Product Specifications

The characteristics of typical intermediate crude unit products is summarized in the following table:

Table C.2.1 - CRUDE UNIT INTERMEDIATE PRODUCT CHARACTERISTICS

Value	Unit	Naphtha	Kerosene[1]	Gas Oil	Light Fuel Oil	Heavy Fuel Oil
Gravity	°API	-----	45	37	25.7	15.9
Distillation: IBP	°C	31	162	182	-----	-----
50%	°C	110	218	272	-----	-----
90%	°C	156	265 (95%)	350	-----	-----
EP	°C / vol%	179 / 95	280 / 99	370 / 99	360 / 23	-----
Sulfur	% weight	0.035	0.25	0.85	1.5 - 1.6	2.5 - 2.8
Pour Point	°C	-----	-50	-13	-----	+40
Viscosity	mm^2 / sec	-----	-----	-----	23 @40°C	40 - 50 @ 100 °C

The quality of kerosene is adjusted for jet fuel production. Gas oil and light fuel oil are adjusted to summer or winter quality. Distillation characteristics vary according to product need.

(1) Jet Fuel: 46.5 °API
Distillation 10% point - 180 °C Max
Distillation 90% point - 260 °C Max

2.6. Unit Yields

Typical yields from the atmospheric crude distillation unit are as follows in Table C.2.2.

Table C.2.2 - TYPICAL CRUDE UNIT YIELDS

Product	Yield, wt%
Naphtha	17.8
Kerosene	9.0
Gas oil	23.5
Light fuel oil	6.0
Heavy fuel oil	43.5
Gas (Light Ends)	0.2
TOTAL	100.0

2.7 Unit Modification Potential

The modifications will depend primarily on the upgrading process for atmospheric residue and types of crude oil eventually selected for processing. There are, nonetheless, ways to modify the unit to reduce energy consumption and overall economy of processing.

During the evaluation period and in discussions with refinery personnel, the following areas of improvement were suggested:

- To minimize the heat loss and improve efficiency of the furnaces, use flue gas/combustion air preheat. This project is under evaluation and will also include naphtha HDS furnaces.

- To optimize the process using computer simulation and better instrumentation (fully implementing distributed control system), especially under the conditions of crude oil quality changes.

The existing desalter is a single stage unit. As is noted earlier in the report, the salt content of the crude has increased up to 50 ppm from 25 ppm. The refinery has stated that they will need to add a second stage to the desalter if the salt levels approach 100 ppm.

Any long-term modifications of the unit must be considered in connection with atmospheric residue processing, which is the most crucial problem in maintaining system on stream time and thus yearly throughput. A well designed processing step will prevent or reduce summer shutdowns due to lack of resid storage/sales, but most importantly will reduce product sulfur content. It is know that legislation processes are in the works to lower product sulfur specifications.

2.8 Capacity Increase Potential

Based on projected crude oil availability and product demand, there is a possibility that crude unit capacity will need to be increased. This has been studied as an alternative in connection with residue processing. Upgrading the new unit to four million tonnes/year capacity has been considered, but that requires modification of downstream units, which can only be justified with the addition of increased or different residue processing schemes.

2.9 Operating Practices

To date, the unit has been operated only with Soviet crudes. There are difficulties in product quality i.e. sulfur, connected with the processing of higher sulfur crude that must be addressed.

The desalter is operated at 145 °C and 1.35 Mpa. The original discharge pressure of the crude feed pumps was 3.55 MPa, an operation which resulted in crude heat exchanger leakage problems. The system is now run in the range of 2.84 MPa. A flash calculation on the Russian crude indicates a vapor pressure under 0.5 MPa at 145 °C. Similar high pressures are found along the heat exchange train. We believe the pressures to be too high as we understand conditions and suggest that electrical pumping energy is wasted under this type of operation.

Kaucuk agitates their crude oil storage tanks, which tends to keep them clean. Solids are removed in the desalter. Constant, uniform removal of salts and solids from the system minimizes potential heat exchanger fouling problems. This is a good practice and it has been recommended to other refineries.

The crude column overhead sour water target pH is 5.5 to 5.6 with difficulty reported in maintaining this value. It is believed the inability to control pH here results in corrosion in the naphtha hydrotreater. An on-line pH controller would be useful. Alternately, improved or different approaches to corrosion inhibitor type and application should be investigated.

Operating personnel have low turnover and are skilled. Technicians are very competent. There are infrequent shutdowns. An inconsistent/non-uniform and possibly different quality crude supply will require larger crude oil storage and blending facilities. The maintenance turn-around cycle has been extended to two years, but still is shorter than in western refineries (4-5 years).

2.10 Replacement / Shutdown Observations

There are no apparent reasons to replace or shut down the unit.

3. NAPHTHA HYDRODESULFURIZATION AND REDISTILLATION

3.1. Process Flow Diagram

The process flow diagram of the Naphtha hydrodesulfurization Unit is shown in Figure No. 2 and flow diagram of the Hydrodesulfurized Naphtha Redistillation Column is Figure No. 3. Within these units the following operations take place:

- Straight run naphtha from the atmospheric distillation is mixed with hydrogen.
- A stream (up to 4 tonnes/h) of unsaturated C_4 fraction, from MTBE production is added.
- The mixture reacts over CoMo catalyst (KF-124 from Akzo Ketjen) where it is saturated and the sulfur is converted to H_2S.
- The reaction mixture is cooled in heat exchangers and coolers. The liquid phase is separated and the hydrogen is recycled.
- Liquid product is reheated by heat exchange and stabilized.
- Hydrodesulfurized and stabilized naphtha is returned for fractionation to specification in the redistillation column located in the crude distillation unit.

3.2 Feedstock

The current feedstock is a straight run naphtha, as specified in Table C.2.1, Section 3.1. The Naphtha HDS Unit could process a naphtha from a different crude in similar quantity and similar sulfur content. A high level of desulfurization is necessary because the sulfur content in heavy naphtha (bottom product of the redistillation column) has to be lower than 1 ppm. There is some flexibility in catalyst properties and operating temperatures in desulfurization, but the actual conditions for different feedstocks should be regarded as requiring a testing program and likely close collaboration with the catalyst supplier.

Table C.2.2 - TYPICAL CRUDE UNIT YIELDS

Product	Yield, wt%
Naphtha	17.8
Kerosene	9.0
Gas oil	23.5
Light fuel oil	6.0
Heavy fuel oil	43.5
Gas (Light Ends)	0.2
TOTAL	100.0

2.7 Unit Modification Potential

The modifications will depend primarily on the upgrading process for atmospheric residue and types of crude oil eventually selected for processing. There are, nonetheless, ways to modify the unit to reduce energy consumption and overall economy of processing.

During the evaluation period and in discussions with refinery personnel, the following areas of improvement were suggested:

- To minimize the heat loss and improve efficiency of the furnaces, use flue gas/combustion air preheat. This project is under evaluation and will also include naphtha HDS furnaces.

- To optimize the process using computer simulation and better instrumentation (fully implementing distributed control system), especially under the conditions of crude oil quality changes.

The existing desalter is a single stage unit. As is noted earlier in the report, the salt content of the crude has increased up to 50 ppm from 25 ppm. The refinery has stated that they will need to add a second stage to the desalter if the salt levels approach 100 ppm.

136

Any long-term modifications of the unit must be considered in connection with atmospheric residue processing, which is the most crucial problem in maintaining system on stream time and thus yearly throughput. A well designed processing step will prevent or reduce summer shutdowns due to lack of resid storage/sales, but most importantly will reduce product sulfur content. It is know that legislation processes are in the works to lower product sulfur specifications.

2.8 Capacity Increase Potential

Based on projected crude oil availability and product demand, there is a possibility that crude unit capacity will need to be increased. This has been studied as an alternative in connection with residue processing. Upgrading the new unit to four million tonnes/year capacity has been considered, but that requires modification of downstream units, which can only be justified with the addition of increased or different residue processing schemes.

2.9 Operating Practices

To date, the unit has been operated only with Soviet crudes. There are difficulties in product quality i.e. sulfur, connected with the processing of higher sulfur crude that must be addressed.

The desalter is operated at 145 °C and 1.35 Mpa. The original discharge pressure of the crude feed pumps was 3.55 MPa, an operation which resulted in crude heat exchanger leakage problems. The system is now run in the range of 2.84 MPa. A flash calculation on the Russian crude indicates a vapor pressure under 0.5 MPa at 145 °C. Similar high pressures are found along the heat exchange train. We believe the pressures to be too high as we understand conditions and suggest that electrical pumping energy is wasted under this type of operation.

Kaucuk agitates their crude oil storage tanks, which tends to keep them clean. Solids are removed in the desalter. Constant, uniform removal of salts and solids from the system minimizes potential heat exchanger fouling problems. This is a good practice and it has been recommended to other refineries.

The crude column overhead sour water target pH is 5.5 to 5.6 with difficulty reported in maintaining this value. It is believed the inability to control pH here results in corrosion in the naphtha hydrotreater. An on-line pH controller would be useful. Alternately, improved or different approaches to corrosion inhibitor type and application should be investigated.

Operating personnel have low turnover and are skilled. Technicians are very competent. There are infrequent shutdowns. An inconsistent/non-uniform and possibly different quality crude supply will require larger crude oil storage and blending facilities. The maintenance turn-around cycle has been extended to two years, but still is shorter than in western refineries (4-5 years).

2.10 Replacement / Shutdown Observations

There are no apparent reasons to replace or shut down the unit.

3. NAPHTHA HYDRODESULFURIZATION AND REDISTILLATION

3.1. Process Flow Diagram

The process flow diagram of the Naphtha hydrodesulfurization Unit is shown in Figure No. 2 and flow diagram of the Hydrodesulfurized Naphtha Redistillation Column is Figure No. 3. Within these units the following operations take place:

- Straight run naphtha from the atmospheric distillation is mixed with hydrogen.
- A stream (up to 4 tonnes/h) of unsaturated C_4 fraction, from MTBE production is added.
- The mixture reacts over CoMo catalyst (KF-124 from Akzo Ketjen) where it is saturated and the sulfur is converted to H_2S.
- The reaction mixture is cooled in heat exchangers and coolers. The liquid phase is separated and the hydrogen is recycled.
- Liquid product is reheated by heat exchange and stabilized.
- Hydrodesulfurized and stabilized naphtha is returned for fractionation to specification in the redistillation column located in the crude distillation unit.

3.2 Feedstock

The current feedstock is a straight run naphtha, as specified in Table C.2.1, Section 3.1. The Naphtha HDS Unit could process a naphtha from a different crude in similar quantity and similar sulfur content. A high level of desulfurization is necessary because the sulfur content in heavy naphtha (bottom product of the redistillation column) has to be lower than 1 ppm. There is some flexibility in catalyst properties and operating temperatures in desulfurization, but the actual conditions for different feedstocks should be regarded as requiring a testing program and likely close collaboration with the catalyst supplier.

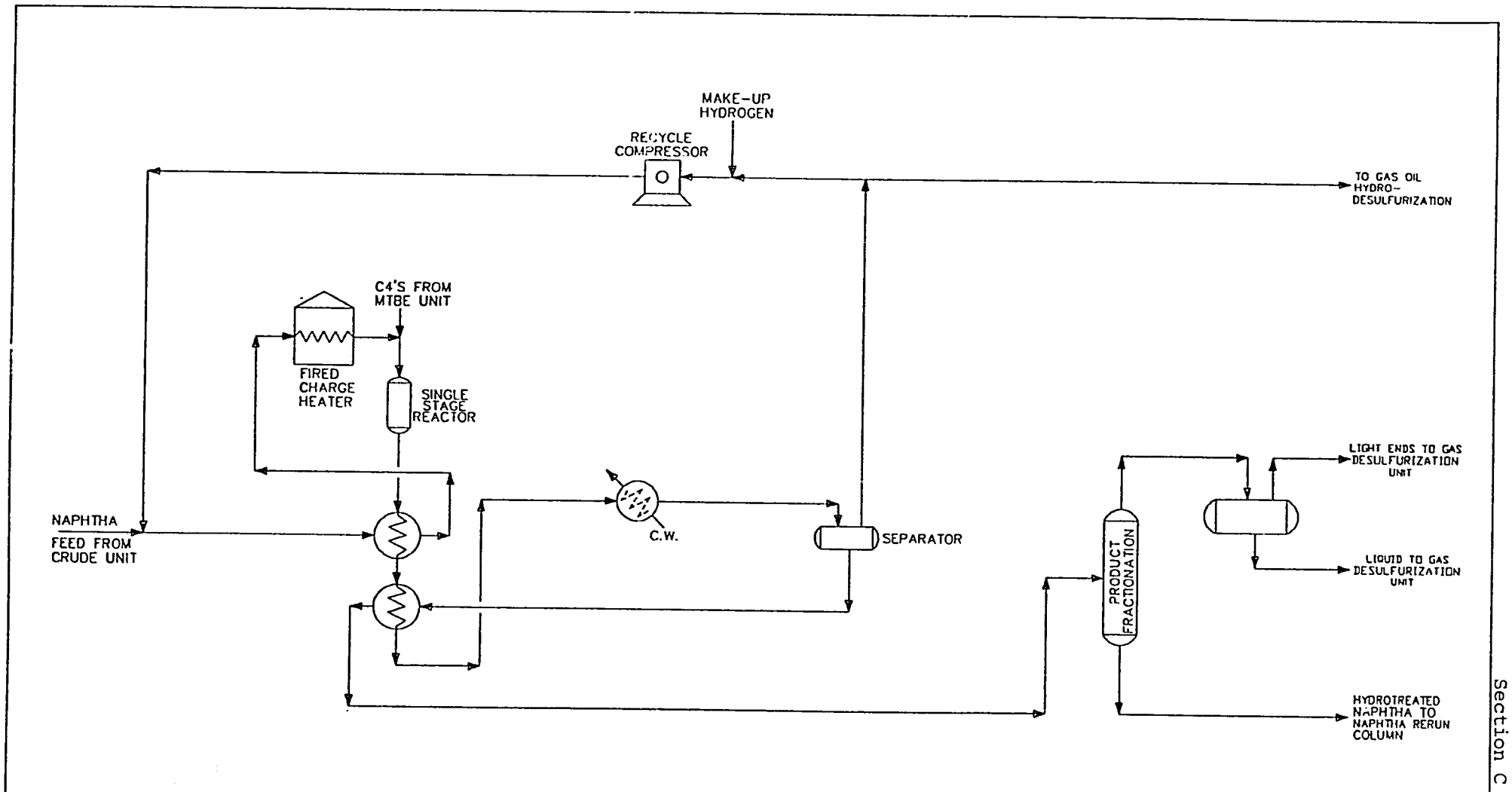

Figure 2

DATE	REV	BY	APPR	DESCRIPTION
10/15/91	A	T.G		FOR EVALUATION REPORT

Davy McKee Corporation
CHICAGO ILLINOIS

KAUCUK REFINERY
KRALUPY, CZECHOSLOVAKIA

SIMPLIFIED PROCESS FLOW DIAGRAM
NAPHTHA HYDRODESULFURIZATION UNIT

DWG. No. 2063-22-03-102 A

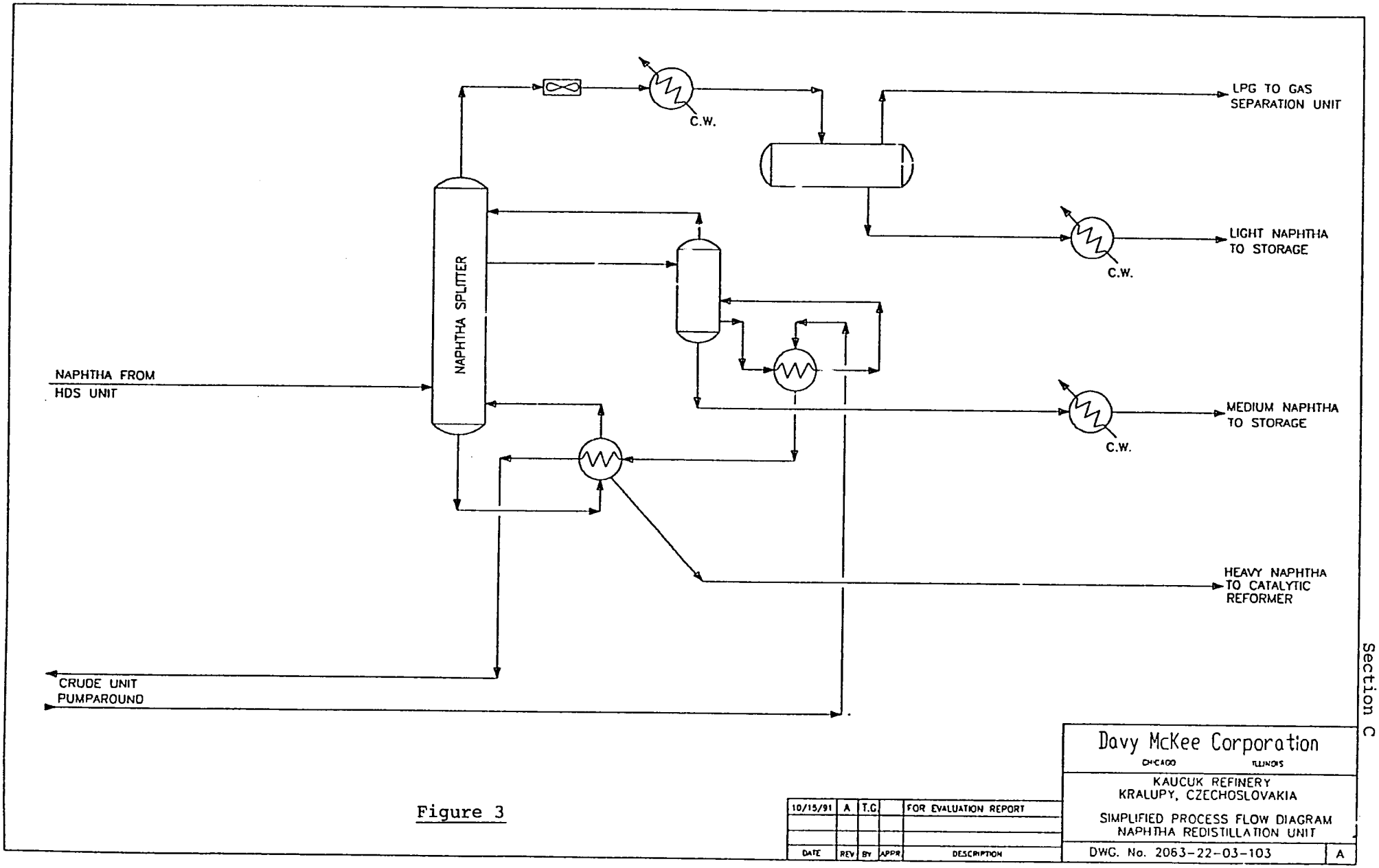
NAPHTHA SPLITTER
NAPHTHA FROM
HDS UNIT
C.W.
LPG TO GAS
SEPARATION UNIT
LIGHT NAPHTHA
TO STORAGE
C.W.
MEDIUM NAPHTHA
TO STORAGE
C.W.
HEAVY NAPHTHA
TO CATALYTIC
REFORMER
CRUDE UNIT
PUMPAROUND
Davy McKee Corporation
CHICAGO ILLINOIS
KAUCUK REFINERY
KRALUPY, CZECHOSLOVAKIA
SIMPLIFIED PROCESS FLOW DIAGRAM
NAPHTHA REDISTILLATION UNIT
DWG. No. 2063-22-03-103
A
10/15/91 A T.G. FOR EVALUATION REPORT
DATE REV BY APPR DESCRIPTION

Figure 3

3.3 Unit Flexibility

Operating rates of the unit vary between 48-80 tonnes/h. The nominal feed rate is reported to be 72.3 tonnes/h with an additional 1.2 tonnes/h input from the Kerosene and Gas Oil HDS Unit reflux drums. These feed rates still allow saturation of about 4 tonnes/h of butylenes (from MTBE production) thus increasing the throughput to over 80 tonnes/h at high feed rates. Although a minor issue and not a general problem, note that one of the heat exchangers experiences higher than normal erosion, corrosion and fouling when operating in this mode.

3.4 Operational Sensitivity

Operational sensitivity has been evaluated from the point of:

- feed composition
- charge rate
- product specification

Feed composition will change with crude oil change. Based on existing operating conditions, the most important variables are sulfur content, catalyst poisoning due to lead and impurities (which are believed by the refinery to be corrosion products) that plug the catalyst bed and increase the reactor pressure drop.

The feed is filtered to remove the impurities. Despite this, there is a fouling problem in the heat exchange train where ammonium chloride and the solid impurities deposit and require a monthly wash-out process.

The charge rate has previously been discussed, but an increase over 80 tonnes/h reduces the lifetime of exchangers considerably due to corrosion problems. Installation of a hot separator, which is under consideration, would reduce the exchange train flow rates and thus exchanger liquid velocity as well as improve heat recovery.

For product specification, the most important parameter is the content of catalyst poisons (sulfur and lead) in heavy naphtha and the distillation range of the catalytic reformer feed.

3.5 Product Specifications

Typical intermediate product characteristics is summarized in the following table:

Table C.3.1 - NAPHTHA SYSTEM STREAM CHARACTERISTICS

VALUE	UNIT	HDS-UNIT			REDISTILLATION COLUMN			
		FEED		PRODUCT	FEED	NAPHTHA 65	NAPHTHA 85	HEAVY NAPHTHA
		TYPICAL	ACTUAL					
Gravity	kg/m^3	705	709	714	709	652	702	748
IBP	°C	35	37	57	37	41	71	109
10%	°C	58	60	69	-----	--------	---------	--------
50%	°C	105	110	103	110	51	83	131
90%	°C	148	156	145	156	65	92	155
EP	°C/vol%	175/99	179/95	174/99	179/95	87/99	113/99	180/99
RVP	kPa	-----	51	37	-----	-----	-----	-----
Sulfur Content	ppm	350	-----	1 (max)	-----	-----	-----	1 (max)
Doctor test		pos	----	neg	-----	-----	-----	-----

3.6 Unit Yields

Typical yields of atmospheric products are indicated in the following table:

Table C.3.2 - NAPHTHA SYSTEM PRODUCT YIELDS

PRODUCT	UNIT	HYDRODESULFURIZER wt%/tonne of feed	REDISTILLATION wt%/tonne of feed
Stabilized Naphtha	wt%	90.3	----------
LPG	wt%	9.7	----------
Naphtha 65	wt%	----------	18.47
Naphtha 85	wt%	----------	16.29
Heavy Naphtha	wt%	----------	65.10

3.7 Unit Modification Potential

There are opportunities to improve technical and economic parameters of the unit:

- Addition of an air preheater for recovery of flue gas heat to preheat combustion air. This addition is part of the crude distillation unit preheater project.
- A more in-depth study is necessary on reduction or elimination of NH_4Cl deposits in the exchangers and associated corrosion problems.
- A hot separator installation has been evaluated and is in the engineering/design stage. The capacity of the unit varies between 45 to 80 tonnes/h. The higher the throughput, the higher the E-6 exchanger corrosion rate. The hot separator would reduce energy use and result in lower velocities in problem exchanger E-6.

All these modifications can improve flexibility, heat consumption and economic parameters of the unit.

3.8 Capacity Increase Potential

Naphtha hydrodesulfurization and redistillation units are adequate for the existing needs of the refinery (also for the flexibility range of the crude unit) and still have the capacity to process (saturate) about 4 tonnes/h of butylenes. Further increase in capacity may cause corrosion and fouling problems in the heat exchangers. In case of a crude oil change, the issue must be reevaluated with respect to actual quantity and quality of the straight run naphtha.

3.9 Operating Practices

The unit has been operated on a long-term basis with the same feed and has continuously met specification requirements.

There have been some problems with the deposition of ammonium chloride and mechanical impurities in the heat exchange train. More efficient filtration of feed may partly solve the problem. Frequent repeated water washing of exchangers removes the ammonium chloride deposits.

The first layer of catalyst in the reactor system collects much foreign material, which is believed to be a sulfur compound or rust. No analytical data was available. The material is removed by "exploding" the unit's rupture disc which results in blowing the undesirable material and some catalyst out of the reactor. The presence of this material results in reactor plugging and reduced flow rates.

The unit heat exchanger train tube bundles are changed out every two years due to chloride corrosion. When the unit is run at 85 tonnes/h, the velocities and resultant corrosion/erosion is such that exchanger E-6 (the last and coldest in the train) fails in six (6) months.

Other operating practices (personnel, shutdowns, maintenance) are the same as has been described in C.2.9.

3.10 Replacement / Shutdown Observations

There are no apparent reasons to replace or shut down the unit.

4.0 CATALYTIC REFORMING UNIT

4.1 Process Flow Diagram

The process flow diagram of the catalytic reformer is shown on Figure No. 4.

Within the unit the following operations take place:

- Hot, heavy naphtha from the redistillation columns is mixed with recycle hydrogen, preheated in heat exchanger train and fed to the reactor, which contains Platinum - Rhenium catalyst
- The outlet mixture is reheated in the furnace and sent to the next reactor. There are a total of four (4) reactors in the system, all run in series.
- Dehydrocyclization, dehydrogenation and isomerization reactions take place on the catalyst and the octane number of naphtha is increased.
- The mixture from the last reactor is cooled down through heat exchange, and the liquid phase is separated.
- Within the reformer reactions, hydrogen is produced and partly recycled with excess hydrogen used in the refineries HDS units. The hydrogen flows in series from the reformer through the naphtha, gas oil and kerosene units, in that order.
- The liquid product from the separator is reheated and stabilized in a distillation column.

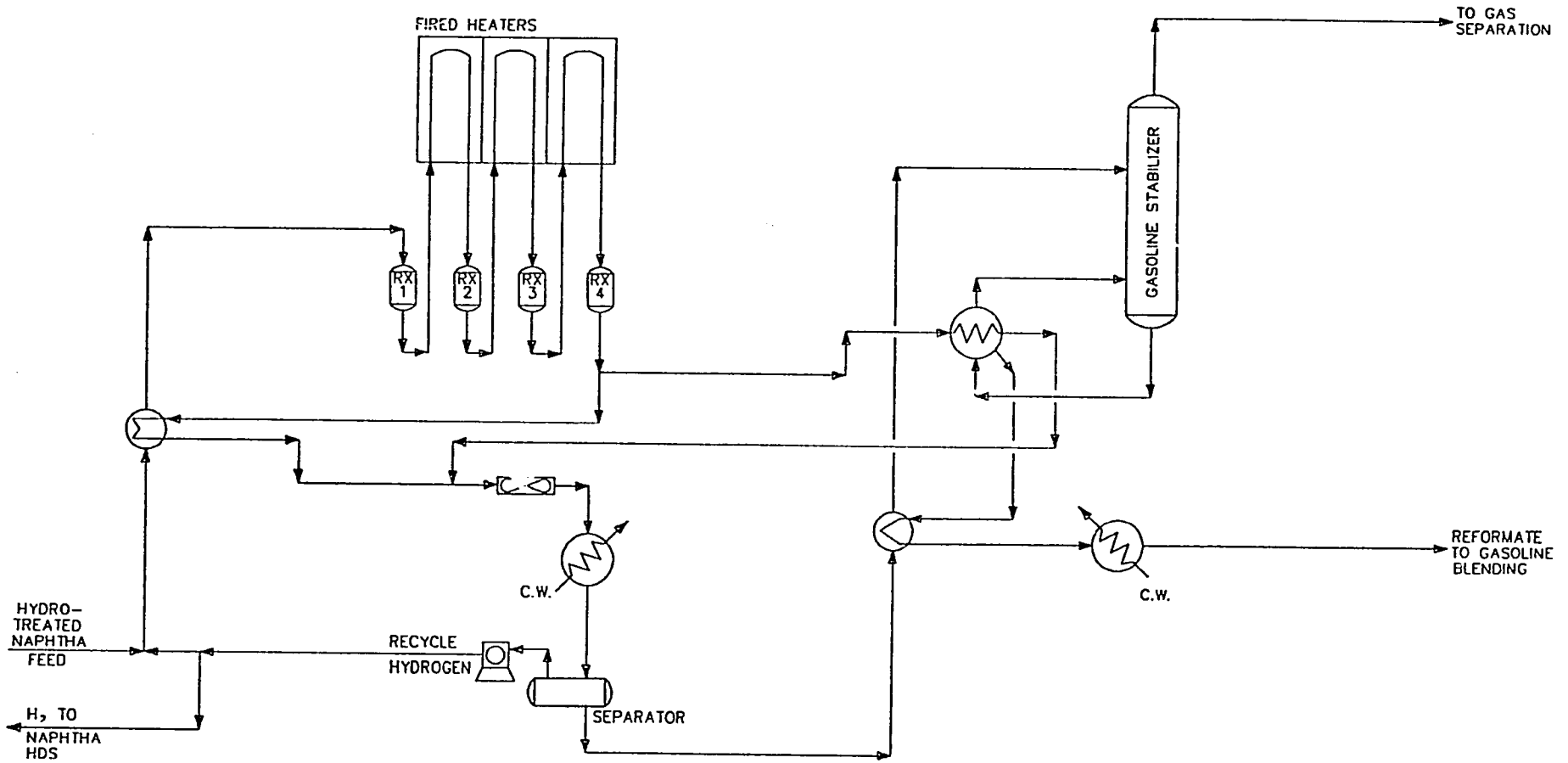

Figure 4

DATE	REV	BY	APPR	DESCRIPTION
10/15/91	A	T.G.		FOR EVALUATION REPORT

Davy McKee Corporation
CHICAGO ILLINOIS

KAUCUK REFINERY
KRALUPY, CZECHOSLOVAKIA

SIMPLIFIED PROCESS FLOW DIAGRAM
CATALYTIC REFORMING UNIT

DWG. No. 2063-22-03-104 A

4.2 Feedstock

The current feedstock is heavy naphtha from the Russian crude oil. Any similar material mav be processed, with process conditions requiring readjustments to match the new feed composition. All catalyst poisons have to be removed (namely sulfur to less than 1 ppm and lead less than 1 ppb) prior to processing.

4.3 Unit Flexibility

The reformer unit can be operated between 28 and 42.5 tonnes/h, the latter figure as a maximum. At lower rates, the feed pump cannot be operated reliably and there is also not enough heat from the reactor effluent stream to operate the stabilizer reboiler. Design capacity (and flexibility) was increased in the past by adding a reactor to the system.

4.4 Operational Sensitivity

Factors that have an impact on the reformer process are:

- Feed composition
- Catalyst poisons
- Catalyst condition
- Composition of the recycle gas

Feed composition (namely naphthenes) is defined primarily by crude oil composition, and secondly by the distillation range in the so-called redistillation unit.

Catalyst poisons: sulfur has to be reduced to below 1 ppm in the feed otherwise the catalyst performance suffers. Sulfur poisoning is reversible. Lead content in the feed accumulates on the catalyst and is non-reversible. The lead content has to be controlled by careful handling of leaded gasoline slops. The catalyst is regenerated in two-year cycles. During this cycle, activity of the catalyst is controlled by monitoring the temperature of the reactors and chlorine content in the catalyst.

Moisture content in the recycle gas slows down the startup procedure because the temperature on the catalyst does not rise over 480 °C until the water content in the recycled gas entering the catalyst bed is lower than 50 ppm. It is reported that it takes days to reach desired water levels. A drier installation in the gas recycle circuit can solve the problem. Improved on-stream time and thus yearly product rate and profitability will result.

4.5 Product Specifications

Data for the unit as supplied by the refinery for March, 1991 operations are as follows in Tables C.4.1 and C.4.1.2:

Table C.4.1 - PRODUCT SPECIFICATIONS

VALUE	UNIT	FEED	REFORMATE LIQUID PRODUCT
Specific Gravity	kg/m^3	747	782
IBP	°C	109	45
5%	°C	113	61
50%	°C	131	127
95%	°C	155	175
EP	°C/vol%	180/99	199/99
Sulfur	ppm	1	-
Pb	ppb	0	0
RVP (LAB)	kPa	-	39
RON		-	95.2

46

Table C.4.1.2 - REFORMER INTERNAL STREAM COMPOSITIONS

Composition	Recycle Gas vol%	LPG Gas vol%	LPG wt% Liquid
H_2	84.4[1]	22.3	-
C_1	7.3	11.8	0.4
C_2	4.2	28.9	10.8
C_3	2.6	28.5	44.5
i-C_4	0.6	4.8	22.7
n-C_4	0.6	3.7	21.5
i-C_5	0.2	trace	0.3
n-C_5	0.1	trace	trace
Avg. M.W	6.172	-	-

[1] The refinery typically sees a concentration of 79%. The data in this table is as supplied by the refinery and reflects March, 1991 operations, which may be out of Norm.

4.6 Unit Yields

Typical product yields are as follows:

Product	wt%
Reformate	88.0
Export H_2	8.7
Fuel Gas	1.4
LPG	1.9

The reformer uses a bimetallic platinum-rhenium catalyst (Akzo Ketjen CK522).

49

4.7 Unit Modification Potential

The unit has already been modified from the original design, by adding a reactor and increasing catalyst volume and capacity. Flexibility of the equipment and economy of the process can be improved by:

- Completing the study of flue gas/combustion air heat exchange for the reformer and other furnaces (which is referred to the right side of the mainstack as viewed from the control room).
- Evaluating the economical feasibility of drying the recycle gas during the start-up.
- Adding catalyst sampling, hydrogen analyzer and octane monitoring instrumentation to improve control of the process, regeneration cycle and catalyst quality. An on-line analyzer to optimize octane is needed. A justification for an octane analyzer is presented below and shows a payout of 2.5 years.

Justification for Reformer Octane Control

Basis: Kralupy reformer design feed rate of 40 tonnes/h (8 000 Bbl/day) and gravity of 0.755 at 60 °F, and a 0.5 RON improvement in octane control.

From the reference article[1], a 0.011 increase in volume of C_5+ per change in RON is used. From refinery cost data, the difference between gasoline and refinery fuel gas is approximately 600 Kcs/tonne ($2.52/Bbl). Product gravity is 0.79 at 60 °F.

Following is the projected annual savings for improved octane control:

$$8\,000 \frac{\text{Bbl}}{\text{day}} \times \left(\frac{0.011}{\text{RON}} \times 0.5\ \text{RON}\right) \times \frac{\$2.52}{\text{Bbl}} \times \frac{330\ \text{days}}{\text{y}} = \$36\,590/\text{y}$$

Savings in operating cost for a 0.5 RON change are $50/day; data from the 1980 reference article.

$$\frac{\$50}{\text{day}} \times \frac{330\ \text{days}}{\text{y}} \times 1.62\ (\text{inflation factor}) = \$26\,730/\text{y}$$

Estimated total savings = $63 320/y

[1]Reference: Bajek, W.A. "New Analyzers Improve Reformer Efficiency". Hydrocarbon Processing. June 1980.

4.8 Capacity Increase Potential

The capacity of the unit has already been increased. Other improvement possibilities are outlined in Section 4.7.

4.9 Operating Practices

The initial catalyst life was 13 years with Akzo CK433. Last year, all reactors were changed to Akzo CK522.

There is a unit start-up problem with water in the reformate. A drying system in the recycle stream is needed. The operations staff reports that it takes days to reduce moisture to acceptable levels (50 ppm water or less). An estimate of lost production due to this problem is needed as a basis for justifying a drier.

The unit has operated with the same quality of feed since startup. Minor changes were made as a result of the previous-mentioned modification. The reformer catalyst is relatively sensitive and the process variables have to be carefully watched. Other operating practices (personnel, shutdowns, maintenance) are the same as described in C.2.9.

4.10 Replacement / Shutdown Observations

There are no apparent reasons to replace or shut down the unit. However, if Kaucuk installs a high octane reformer the in future, this unit has potential for revamp into an isomerization unit.

5. KEROSENE HYDRODESULFURIZATION UNIT

5.1. Process Flow Diagram

Process flow diagram of kerosene hydrodesulfurization unit is shown in Figure No. 5.

The following operations take place within the unit:

- Hot kerosene (180 °C) flows directly from the crude distillation unit and is mixed with the hydrogen recycle gas, preheated through heat exchange and in the furnace.
- The hot mixture is reacted over the S444T catalyst to produce H_2S.
- The reaction mixture is cooled down through heat exchange and coolers. The reactor effluent phases are separated and hydrogen recycled.
- Liquid product from the separator is preheated through heat exchange and light ends removed in a distillation column.
- Hydrogen recycle gas is washed with diethanolamine (DEA) solution to remove H_2S.

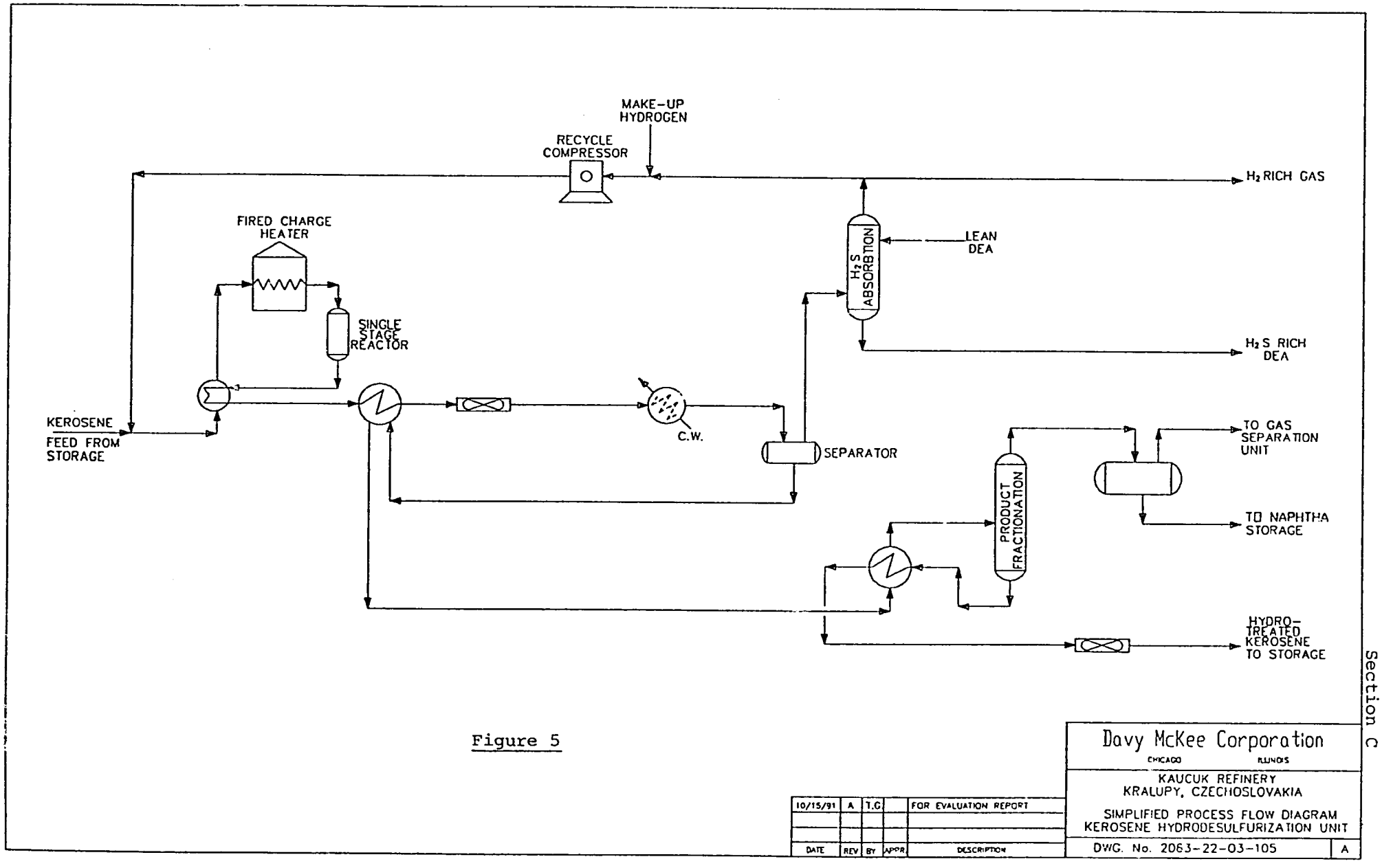
MAKE-UP HYDROGEN
RECYCLE COMPRESSOR
H_2 RICH GAS
FIRED CHARGE HEATER
SINGLE STAGE REACTOR
H_2S ABSORBTION
LEAN DEA
H_2S RICH DEA
KEROSENE FEED FROM STORAGE
C.W.
SEPARATOR
PRODUCT FRACTIONATION
TO GAS SEPARATION UNIT
TO NAPHTHA STORAGE
HYDRO-TREATED KEROSENE TO STORAGE
Davy McKee Corporation
CHICAGO ILLINOIS
KAUCUK REFINERY
KRALUPY, CZECHOSLOVAKIA
SIMPLIFIED PROCESS FLOW DIAGRAM
KEROSENE HYDRODESULFURIZATION UNIT
DWG. No. 2063-22-03-105
A
10/15/91 A T.G. FOR EVALUATION REPORT
DATE REV BY APPR DESCRIPTION

Figure 5

67

5.2 Feedstock

See Table C.1.4. for kerosene feedstock properties.

5.3 Unit Flexibility

The unit is running smoothly. However, due to the product split in crude distillation, this unit is at 70% of capacity. The operating range of the unit is between 23 - 46.2 tonnes/h, the latter figure reflecting design capacity.

5.4 Operational Sensitivity

This unit is not very sensitive to changes in feed composition and operational conditions, within normal operations. Impurities are washed from the heat exchangers about once a month.

5.5 Product Specifications

Typical product quality is shown in the following table:

Table C.5.1 - KEROSENE HDS UNIT PRODUCT CHARACTERISTICS

VALUE	UNIT	PRODUCT	LIGHT ENDS	FEED
Density	kg/m^3	800	702.	801
IBP	°C	172	68	152
5%	°C	183 (10%)	75	179
50%	°C	203	84	218
95%	°C	246 (90%)	96	265
EP	°C/vol%	279/99	111/99	280/99
Sulfur content	wt%	0.01	-----	0.28
Flash point	°C	56	-----	49
Doctor test		negative	-----	-----

5.6 Unit Yields

The typical yields of products are shown in the following table:

Table C.5.2 - KEROSENE HDS UNIT YIELDS

PRODUCTS	wt%
Kerosene	98.40 0.49
Naphtha Off-gas	0.62
Hydrogen rich gas	0.49

Shell S444T catalyst is used in the hydrodesulfurization reactors.

5.7 Unit Modification Potential

The kerosene hydrodesulfurization unit is relatively trouble free as it is running constantly below nameplate capacity. To improve energy consumption, the following options are under evaluation:

- Flue gas/combustion air preheat
- Installation of a hot separator (after completion of a feasibility study)

5.8 Capacity Increase Potential

Since the unit's startup, it has never operated at rated capacity due to limited feedstock. Accordingly, there has been no need to analyze the unit for debottlenecking purposes. The unit is currently running at 70% of capacity. The kerosene furnace, H-1, is reported to be limiting at high feed rates.

5.9 Operating Practices

The unit runs fairly well and is not operationally sensitive to process fluctuations. Other operating practices (personnel, shutdowns, maintenance) are described in Section C.2.9.

5.10 Replacement / Shutdown Observations

There is no reason for replacing or shutting down the unit.

6. GAS OIL HYDRODESULFURIZATION UNIT

6.1 Process Flow Diagram

The process flow diagram of the Gas Oil Hydrodesulfurization Unit is shown on Figure No. 6.

The following operations take place within the unit:

- Hot gas oil (240 °C) flows directly from the atmospheric distillation unit and is mixed with hydrogen recycle gas and preheated through heat exchangers and in the furnace.

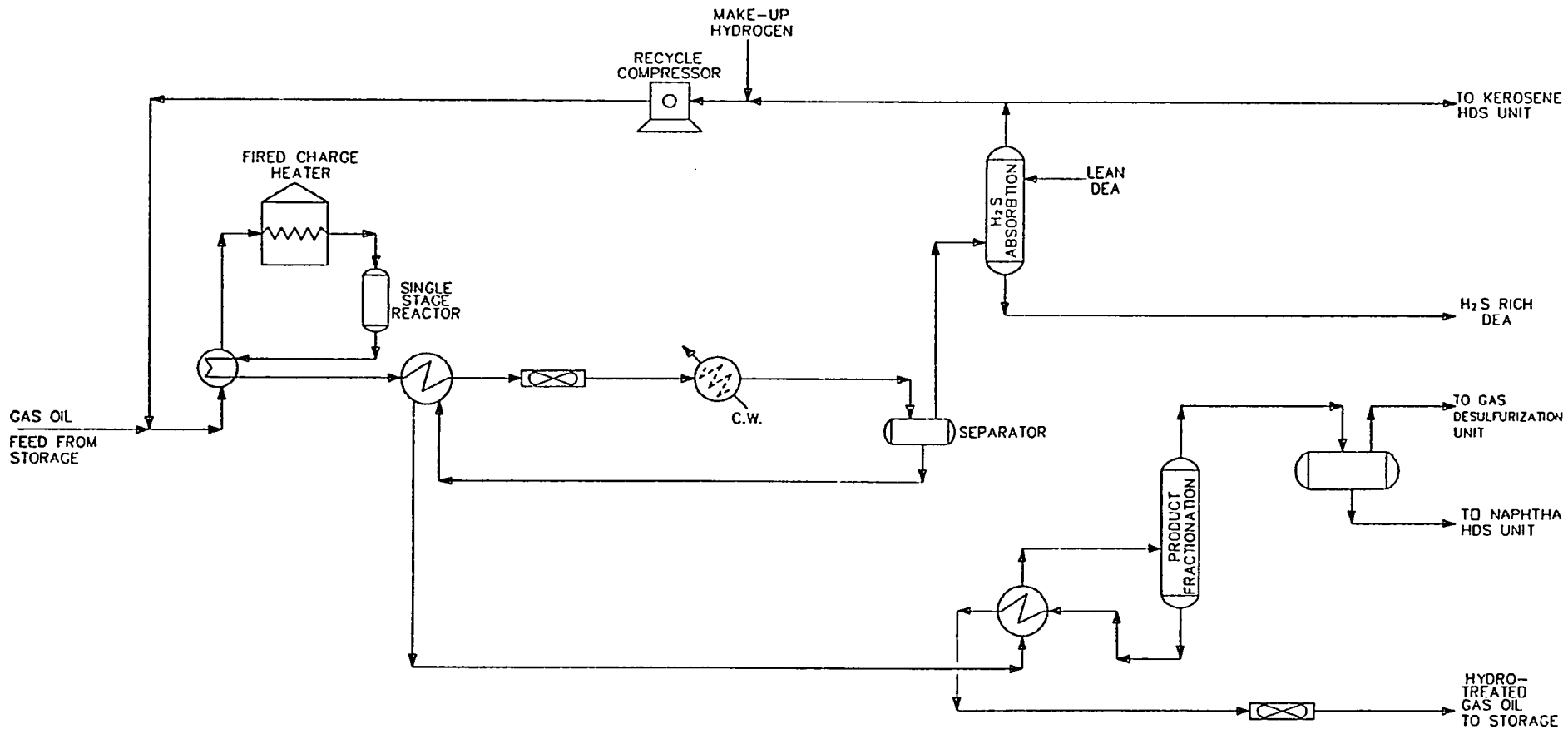

Figure 6

DATE	REV	BY	APPR	DESCRIPTION
10/15/91	A	T.G.		FOR EVALUATION REPORT

Davy McKee Corporation
CHICAGO ILLINOIS

KAUCUK REFINERY
KRALUPY, CZECHOSLOVAKIA

SIMPLIFIED PROCESS FLOW DIAGRAM
GAS OIL HYDRODESULFURIZATION UNIT

DWG. No. 2063-22-03-106 A

- The hot mixture is hydrotreated on the Shell S444T catalyst to react sulfur bearing components within the gas oil to H_2S.
- The reaction mixture is cooled down through heat exchangers and coolers and the gas and liquid phases are separated.
- The hydrogen recycle gas is washed with DEA solution to absorb H_2S and then recycled.
- The liquid phase from the separator is reheated and the light ends are removed.

6.2 Feedstock

The current feedstock is a gas oil from the crude unit. The yields of gas oil are high. In the event a high sulfur crude oil is processed, the resulting sulfur content in the gas oil may present some problems.

6.3 Unit Flexibility

The operating range of the unit is between 48.5 - 110 tonnes/h. Design capacity is 72.9 tonnes/h. Normally the unit is operated at 90 tonnes/h, i.e., 123% of the nameplate capacity. The stripping column bottoms/reboiler feed pump is reported to lost suction at operating rates above 90 tonnes/hour.

6.4 Operational Sensitivity

The gas oil desulfurization unit is not very sensitive to feedstock changes. Although it is operated above design, it desulfurizes gas oil to a point below specification.

6.5 Product Specifications

Typical product quality is presented in the following table.

Table C.6.1 - GAS OIL HDS UNIT FEED AND PRODUCT CHARACTERISTICS

VALUE	UNIT	FEED	PRODUCT	Light Ends
Density	kg/m^3	835	833	739
IBP	°C	182	209	64
5%	°C	198	228	93
50%	°C	275	296	130
90%	°C	325	325	149
95%	°C	335	336	160
EP	°C vol%	353/99	353/99	178/99
Sulfur content	wt%	0.67	0.1[illegible] *	———
Cloud point	°C	-9	-9	———
Pour point	°C	-20	-20	———
Flash point	°C	———	86	———

* Diesel standard is less than 0.15 wt% sulfur

6.6 Unit Yields

The typical yield of products are shown below:

Table C.6.2. - GAS OIL HDS UNIT YIELDS

Product	wt%
Gas Oil	97.22
Naphtha	1.27
Hydrogen Sulfide Rich Gas	1.23
Hydrogen Rich Gas	0.28

6.7. Unit Modification Potential

The hydrodesulfurization unit for gas oil has been operated at about 120% of the nameplate capacity. The minimum load is 48 tonnes/h; maximum is about 110 tonnes/h. Modifications under consideration to increase flexibility and energy saving are listed below:

- Flue gas / combustion air heat exchange would improve the highly loaded furnace's efficiency
- A hot separator in the heat exchange line of the reactor would improve the total heat input into the stripping column, which is currently a limiting factor.

6.8 Capacity Increase Potential

The unit is operating at increased capacity. The specified unit modifications (in Section 6.7) will help stabilize and may increase the throughput.

6.9 Operating Practices

The unit has operated with the same feed since start-up. Until now, an even higher sulfur content in the crude oil has been managed and the gas oil quality has been produced to specifications. Other operating practices (personnel, shutdowns, maintenance) are described in Section C.2.9.

6.10 Replacement / Shutdown Observations

There is no reason to replace or shut down the unit.

7.0 GAS DESULFURIZATION UNIT

7.1 Process Flow Diagram

A process flow diagram of the gas desulfurization unit is shown on Figure No. 7. Within the unit, the following operations take place:

- Low pressure gases are compressed to system operating pressure.
- All gases (with some liquefied gas feed) containing sulfur are washed with diethanolamine (DEA) solution which absorbs H_2S.
- The rich DEA solution is preheated and H_2S is desorbed and sent to the Claus unit.
- Sour water from the refinery containing H_2S is stripped.
- Imported hydrogen from the styrene unit in the complex is washed to remove carbon dioxide.

At the present time there are no apparent problems with the unit.

7.2 Feedstock

Currently the unit load is affected by the sulfur content in the crude oil and gas formation during processing. Additional sulfur processing capability exists. Based on the capacity of this plant, the crude oil can have up to 2% sulfur, however, this would cause the heavy fuel oil sulfur content to exceed specification. Table C.7.1 indicated typical feedstock characteristics.

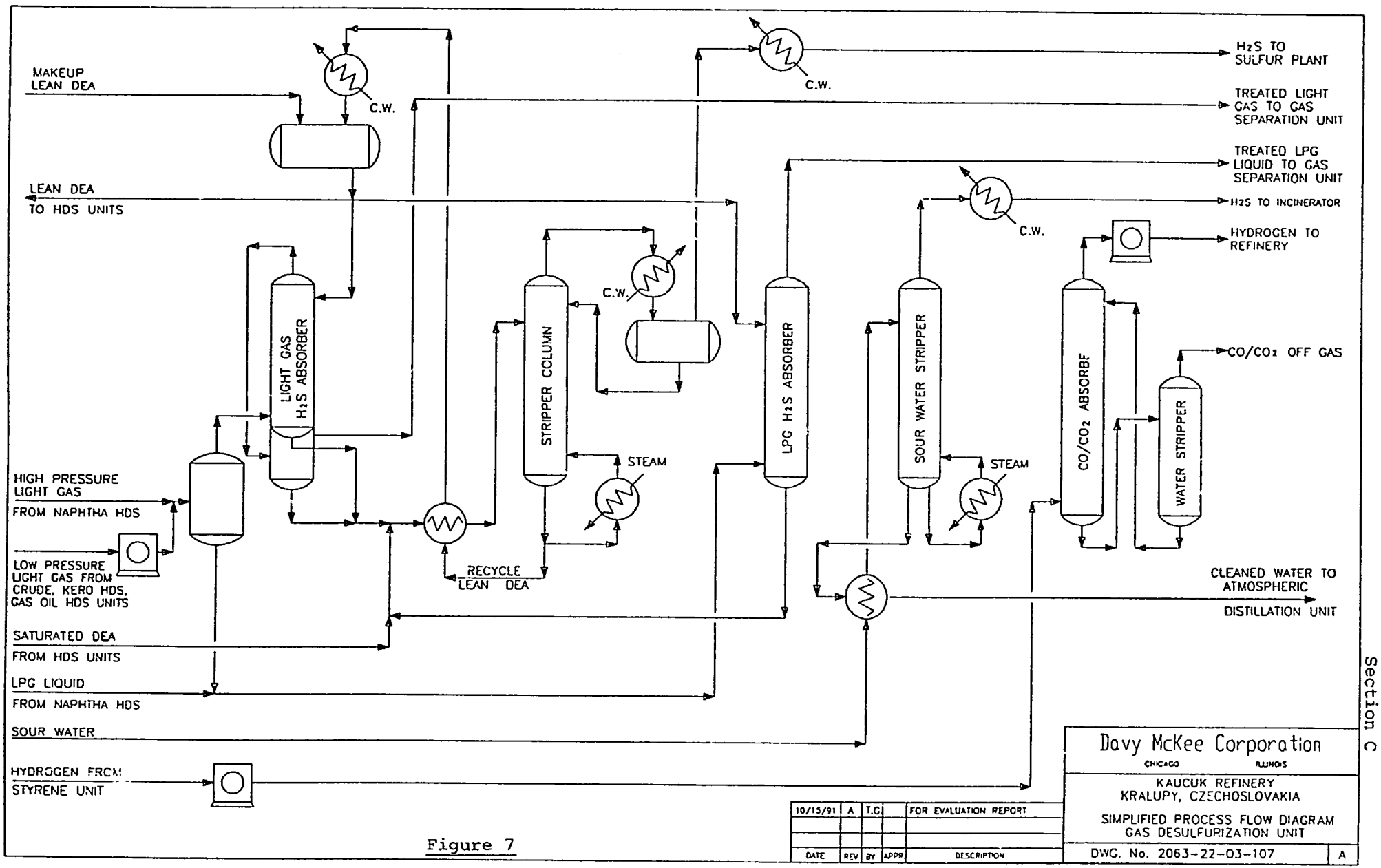
MAKEUP LEAN DEA
C.W.
LEAN DEA TO HDS UNITS
LIGHT GAS H2S ABSORBER
HIGH PRESSURE LIGHT GAS FROM NAPHTHA HDS
LOW PRESSURE LIGHT GAS FROM CRUDE, KERO HDS, GAS OIL HDS UNITS
SATURATED DEA FROM HDS UNITS
LPG LIQUID FROM NAPHTHA HDS
SOUR WATER
HYDROGEN FROM STYRENE UNIT
RECYCLE LEAN DEA
STRIPPER COLUMN
STEAM
LPG H2S ABSORBER
SOUR WATER STRIPPER
CO/CO2 ABSORBF
WATER STRIPPER
H2S TO SULFUR PLANT
TREATED LIGHT GAS TO GAS SEPARATION UNIT
TREATED LPG LIQUID TO GAS SEPARATION UNIT
H2S TO INCINERATOR
HYDROGEN TO REFINERY
CO/CO2 OFF GAS
CLEANED WATER TO ATMOSPHERIC DISTILLATION UNIT
Davy McKee Corporation
CHICAGO ILLINOIS
KAUCUK REFINERY
KRALUPY, CZECHOSLOVAKIA
SIMPLIFIED PROCESS FLOW DIAGRAM
GAS DESULFURIZATION UNIT
DWG. No. 2063-22-03-107
A
10/15/91 A T.G. FOR EVALUATION REPORT
DATE REV BY APPR DESCRIPTION

Figure 7

Table C.7.1 - GAS DESULFURIZATION UNIT PRODUCTS

Component	Gaseous Feed % Vol	Liquified Feed % Vol	After Desulfur	
			Gaseous Prod.	Liquefied Prod.
H_2	34.2	-		
C_1	24.2	0.4		
C_2	15.8	2.9		
C_3	14.5	13.7		
iC_1	2.6	13.1		
nC_4	4.9	59.6		
iC_5	0.3	6.5		
nC_5	0.2	3.8		
C_6+	0.3	-		
H_2S	3.2	0.5	Traces	Traces

7.3 Unit Flexibility

Under normal conditions, when processing Russian crude, the unit operates at about 70% load. To use it fully, a C_4 cut (up to 4 tonnes/h) is added and saturated. There is an adequate spare capacity on the hydrogen sulfide side and it is expected that the unit can manage up to 2% of sulfur in the crude oil.

7.4 Operational Sensitivity

There are no special problems in operating the unit. Wider fluctuation of parameters (DEA concentration), such as increasing stripping temperatures, may cause higher corrosion of the equipment.

7.5 Product Specifications

Hydrocarbon quality and quantity remain unchanged; hydrogen sulfide is eliminated.

7.6 Unit Yields

Typical wt% yields are:

LPG (g)	17.9
H_2S	4.6
LPG (l)	77.5

7.7 Unit Modification Potential

Under existing refinery operating conditions, the gas desulfurization unit has spare capacity. As designed, the unit is able to process gases from the crude, containing up to 2% of sulfur, assuming no increase in gas production rates.

7.8 Capacity Increase Potential

Because of the available spare capacity of the unit, further debottlenecking analysis was not undertaken.

7.9 Operating Practices

The unit has been operating for a long time without difficulty. Other operating practices (personnel, shutdowns, maintenance) are the same as has been described in C.2.9.

7.10 Replacement / Shutdown Observations

There is no reason to replace or shut down the unit.

8. GAS SEPARATION UNIT

8.1 Process Flow Diagram

A process flow diagram of the gas separation Unit is shown on Figure No. 8.

The following operations take place within the unit:

- Sweet gases and desulfurized gases are absorbed in hexane and ethane and lighter components are separated.

- Propane, butane and pentane are selectively desorbed, purified and solvent is recycled.
- If necessary, n-butane and isobutane are separated
- Individual components are partly remixed to provide for commercial products or directly shipped as product.

8.2 Feedstock

Current gas production from Russian crude processing plus quantities up to 4 tonnes/h of C_4 (cut from MTBE production) provides feedstock to the unit.

8.3 Unit Flexibility

When Russian crude oil is supplied at the designed rate, the above mentioned gas separation unit is loaded about 70%. This spare capacity is used to process C_4 cut and this may be needed in case of different crude oils having a higher content of light ends.

8.4 Operational Sensitivity

Operational sensitivity is typical for such a unit. Operating pressure of the columns has been reduced and is controlled by cooling the temperature of the overhead condensers (to reduce the energy consumption). The cooling water temperature is the critical point of operation during hot summer days. Efforts have been taken to get colder water for these condensers through direct use of river water.

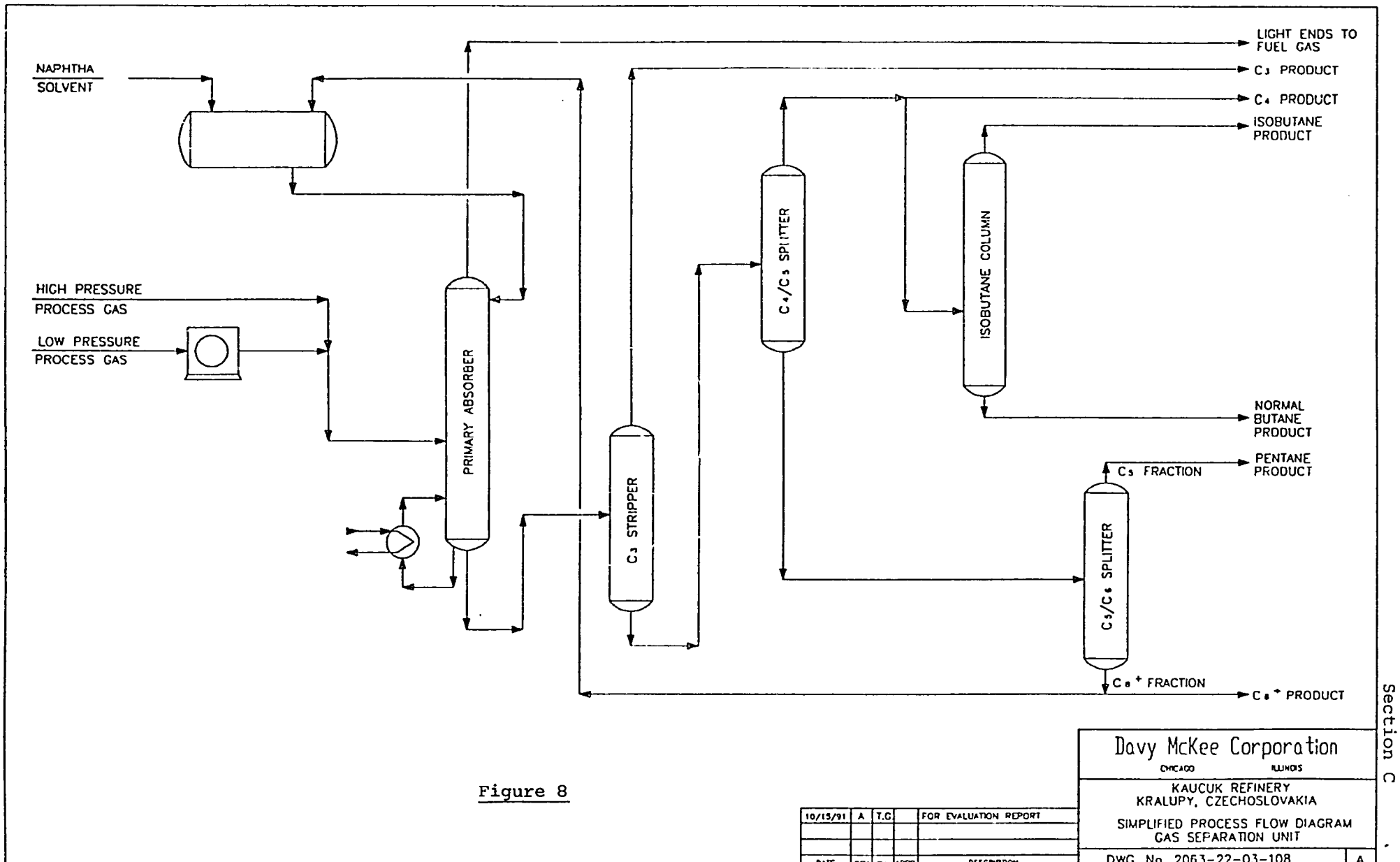
NAPHTHA
SOLVENT
HIGH PRESSURE
PROCESS GAS
LOW PRESSURE
PROCESS GAS
PRIMARY ABSORBER
C3 STRIPPER
C4/C5 SPLITTER
ISOBUTANE COLUMN
C5/C6 SPLITTER
LIGHT ENDS TO
FUEL GAS
C3 PRODUCT
C4 PRODUCT
ISOBUTANE
PRODUCT
NORMAL
BUTANE
PRODUCT
PENTANE
PRODUCT
C5 FRACTION
C6+ FRACTION
C6+ PRODUCT
Davy McKee Corporation
CHICAGO ILLINOIS
KAUCUK REFINERY
KRALUPY, CZECHOSLOVAKIA
SIMPLIFIED PROCESS FLOW DIAGRAM
GAS SEPARATION UNIT
DWG. No. 2063-22-03-108
A
10/15/91 A T.G. FOR EVALUATION REPORT
DATE REV BY APPR DESCRIPTION

Figure 8

8.5 Product Specifications

Typical product quality is indicated in the following table (vol %):

Table C.8.1 - GAS SEPARATION UNIT PRODUCTS

Components	Fuel Gas	C_3/C_4 Stream	C_4 Stream	C_5 Stream	i-C_4	n-C_4	Solvent
H_2	30.0	----	----	----	----	----	----
C_1	26.7	----	----	----	----	----	traces
C_2	36.6	----	----	----	----	----	0.1
C_3	0.6	41.2	----	----	traces	----	traces
i-C_4	0	20.9	10.7	traces	99.3	6.4	0
n-C_4	0.1	37.9	87.6	0.8	0.7	92.2	0.2
i-C_5	3.0	traces	1.6	33.3	traces	1.3	11.9
n-C_5	2.2	----	0.1	23.8		0.1	10.3
C_6+	0.8	----	----	42.1		----	77.5

8.6 Unit Yields

Typical product yields are as follows:

Table C.8.2 - GAS SEPARATION YIELDS

Product	wt%
Fuel gas	10.10
Propane & Butane Mix (LPG)	34.03
i -Butane	11.22
n -Butane	35.49
Pentane	9.16

8.7 Unit Modification Potential

- Closer process control and adjustments would yield improvements in operability (closer control to specifications).
- Column modification to allow the refinery to separate a special C_5 cut for expandable polystyrene production within the petrochemical complex.

8.8 Capacity Increase Potential

The unit already has spare capacity. For this reason, no studies were conducted on additional capacity.

8.9 Operating Practices

The unit is operated with no difficulties. For specific situations, see Sections C.8.4 and C.2.9.

8.10 Replacement / Shutdown Observations

There is no reason for replacing or shutting down the unit.

9. SULFUR RECOVERY UNIT

9.1 Process Flow Diagram

A process flow diagram of the sulfur unit is shown on Figure No. 9.

The following operations take place in the unit:

- H_2S is burned with a controlled quantity of air over catalyst beds to form elemental sulfur, SO_2 and H_2O in several stages.
- Liquid sulfur is collected and sold.
- Reaction heat is used for steam production.
- Tail gas is incinerated generating a SO_2 emission.
- Overall efficiency of sulfur removal is 94 - 96%.

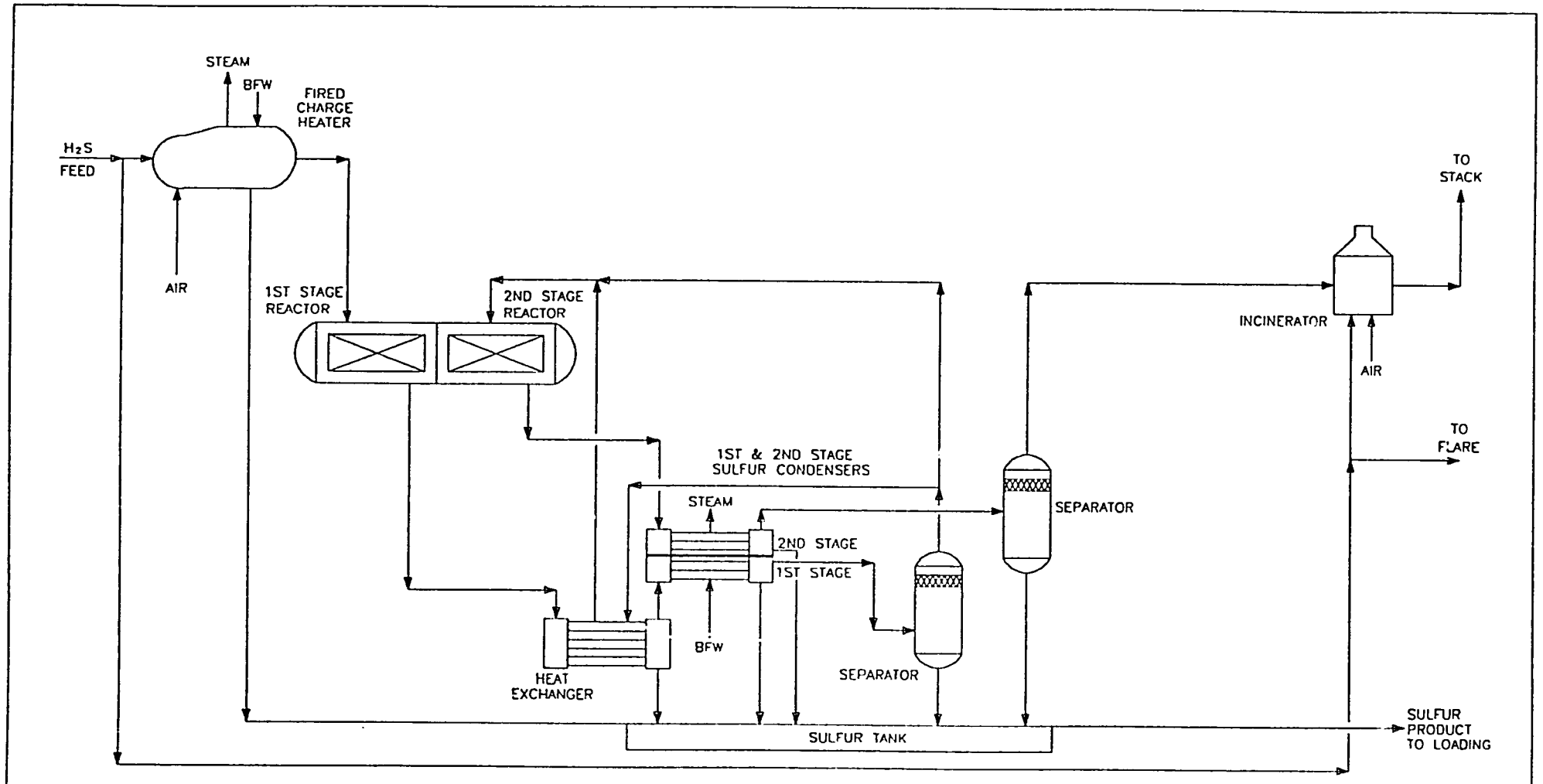

Figure 9

DATE	REV	BY	APPR	DESCRIPTION
10/15/91	A	T.G		FOR EVALUATION REPORT

Davy McKee Corporation
CHICAGO ILLINOIS

KAUCUK REFINERY
KRALUPY, CZECHOSLOVAKIA

SIMPLIFIED PROCESS FLOW DIAGRAM
SULFUR RECOVERY UNIT

DWG. No. 2063-22-03-109 A

9.2 Feedstock

H_2S from the gas desulfurization unit is the feed material. The quantity of H_2S is defined by the sulfur content in fractions that are desulfurized. About 13.5% of the sulfur in the crude is converted to elemental sulfur (12.8%) in the Claus unit with the remainder emitted as sulfurdioxide (0.7%).

9.3 Unit Flexibility

The sulfur unit is loaded to about 75% of nameplate capacity under normal conditions (processing Russian crude of 1.5 - 1.6% sulfur). There is a possibility of temporarily increasing the feed rate and sulfur content in crude oil to 1.9%. However, there are sulfur limitations in the other refinery products that do not allow processing crude with a higher sulfur content.

9.4 Operational Sensitivity

Combustion air / H_2S ratio, temperatures and stream composition have to be watched to maintain optimum sulfur conversion efficiency. There is an out-of-date safety system (to prevent an explosion in the combustion stage) that causes problems during start-up and sudden changes in operating conditions. The tail gas of the Claus unit is incinerated and routed to the refineries main stack.

9.5 Product Specification

The only product is elemental sulfur which is pure enough for sulfuric acid production.

9.6 Unit Yields

The yield of pure sulfur is defined by total efficiency of the process, i.e. 94 - 96%. Two types of catalyst are used in the process:

- S 201 Alumina from Kaiser Chemicals.
- CR catalyst from Rhone Poulenc.

9.7 Unit Modification Potential

The sulfur unit has spare capacity which is not currently utilized.

9.8 Capacity Increase Potential

Because of existing spare capacity, this was not addressed.

9.9 Operating Practices

The unit has been operating well for a long time at steady conditions. In the case of sulfur plant burner loss, all H_2S is incinerated which results in SO_2 release to the atmosphere. The frequency of burner in operability was not reported. For more sensitive areas of the process, see Section 9.4.

9.10 Replacement / Shutdown Observations

There is no reason to replace or shut down this unit.

10. PLANT LIMITATIONS

10.1 Unit Capacities

Operating flexibilities are reported in this section under the respective unit heading. Additional observations are as indicated below.

The crude unit, for example, is rated at 3.3 million tonnes/y. It has been operated up to 3.6 million tonnes/y (440 tonnes/h). The limiting factor was reported to be the inability to process downstream products, especially gas oil. The overhead condenser is limiting at high rates in summer operation. The control system was not sensitive to operational variations at high rates, as the unit was run with open bypasses around the control valves. The second pumparound pump could not handle the pumparound and gas oil load.

When running the crude column to get a sharper cut between kerosene and gas oil, the upper pumparound is increased and there is a resultant difficulty in withdrawing lower products from the column.

The low feed rate of 250 tonnes/h saw poor splits between kerosene and naphtha as well as wild temperature swings in the top of the column. Overall, the crude unit operating limits are between 250 and 430 tonnes/h. In order to match down stream unit capacity, 350 tonnes/h is the proper feed rate.

Within the naphtha HDS unit, there is a summer high capacity (more than 70 tonnes/h throughput) operating high temperature problem. The recycle compressor shuts down when the naphtha product reaches 45 °C, due to poor system cooling capability.

The refinery has shutdown due to inability to store atmospheric residue during periods of low demand for this product. Residue processing is needed. The installation of bottoms processing such as a vacuum column and hydrocracker would provide a variety of benefits. Specifically these would be:

- Increase in facility on stream times (the unit shuts down in the summer due to inability to sell heavy fuel oil). This would increase overall facility productivity on a yearly basis and improve profitability through reduced absorption of fixed changes.

- Improve heavy fuel oil quality with respect to sulfur, through blending residuals with lower sulfur cuts available from hydrocracking operations.

- With pending legislative action to reduce sulfur levels of products below current standards, the need for bottoms processing is further amplified.

10.2 Product Requirements

Kaucuk Refinery is able to meet all specifications for the products that are prescribed by Czechoslovakian standards (CSN). Should it be necessary to produce special products for export, these could be produced (exports could exceed local standards, ie, better quality products can be made) without difficulty.

In case of a crude oil change, there might be other limitations, but basically the refinery it is able to meet the product specifications. When the sulfur content is higher than 1.8 - 1.9 wt%, the heavy fuel oil may exceed the specification in sulfur content (over 3 wt%). This, of course, depends on the sulfur distribution.

10.3 Fuel System

All refinery furnaces are equipped with combined oil / gas burners. Originally, fuel oil and refinery gas were fired and at the time adequate environmental equipment installed. Later, to reduce SO_2 pollution, a natural gas line was connected and now the refinery furnaces are only gas-fired. Fuel gas is a mixture of refinery gas (40 wt%) supplemented with natural gas (60 wt%). More detailed information (composition of gases) is developed in Section B.2.1. of this report. The fuel system is not a limiting factor in operations.

10.4 Steam System

Steam is produced in the refinery in the waste heat boilers and convection section of the reformer furnaces. The refinery is connected to the complex's steam grid with sufficient production backup from the power station. The steam system is not a limiting factor.

10.5 Electric Power System

Kaucuk's power station is a cogeneration plant and as such its electrical power output is a function of the amount of steam used. At present, the Kaucuk complex only uses about one-half of the electrical power that the station is capable of producing. The remaining power produced is sent to the national power grid. Therefore, for debottlenecking or replacement of an old unit with a new larger unit, new generating capacity should not be needed. With a large energy-using unit such as a cat cracker, more electrical generating and boiler capacity might be needed even if the wet gas compressor and air blower are steam-turbine driven.

For the additional electrical usage that would occur with debottlenecking or a unit replacement, the substation/MCC's might need more transformers and switchgear. For a new unit, new feeders and a new substation/MCC would be needed. Considering the plant layout and the present distribution system design, no problems in the design and the implementation for a new substation/MCC should be encountered.

10.6 Tankage

Reasonable tankage for crude oil, intermediates and products has been built. It has been designed and built presuming continuous and trouble-free crude oil supply and product shipment. Unfortunately, that is not the case today, and will likely be a continuing challenge in refinery operation. Consideration should be given to a study to selectively increase tankage.

Smooth product shipment depends on an agreement between Kaucuk and Benzina (fuel distribution organization that has pipelines and also the large product tank farm). Originally both were within one company. Compared to western refineries, the tankage in Kaucuk refinery is smaller and may be a limitation in some cases. The refinery has shutdowns at times due to summer time inability to sell (due to the high sulfur content) or store heavy fuel oil.

In case of crude oil supply from different sources and of different quality, there is a need to blend the crudes to some uniformity that will fit the refinery. In the feasibility study for a TAL pipeline connection (from Germany), a larger tank farm for crude oil is suggested.

10.7 Other Limitations

Crude oil supply

Crude oil supply, it's quality and price, is a serious limitation on the refinery's production capability. Some adjustments in operations have occurred and they are reviewed in Section C.3.4. of the characterization report, which is in Appendix A of this report.

Environmental impact limitations

Kaucuk Refinery has relatively small impact on the total pollution figures of the complex. Within the last few years, fuel oil firing has been eliminated and desulfurized refinery off - gas and natural gas are fired. A wastewater treatment unit has been built and the quality of water effluent meets prescribed limitations.

The current regulatory limits for wastewater discharges are as follows:

Quantity	394 000 cubic meters / month
BOD	5 tonnes / month
COD	25 tonnes / month
Sulfates	57 tonnes / month
Oil (extract)	1.25 tonnes / month
Chlorides	79.2 tonnes / month
Suspended Solids	10.8 tonnes / month

Based upon the 1990 levels of actual effluents, and continued good operation of the waste water treatment plant, the limits for water discharge will not be a controlling factor.

There is no imposed limit for solid waste since all the solid waste is incinerated. There is currently no limit on the incinerator ash disposal.

The only sulfur emission is from the Claus tail gas and represents a small fraction of the emissions for the complex. The Claus tail gas unit currently will not be a limiting factor.

It should be mentioned that disposal of solid waste from flue gas desulfurization units is a problem in the CSFR. The ground is granular in nature, and "landfilling" this waste will require lining to prevent leachate form contaminating ground water supplies. The use of sulfuric acid or elemental sulfur producing flue gas desulfurization systems is viewed as a more likely process by the country's technical planners. Nevertheless, the problem of disposing of a solid waste would remain.

Fuel oil sales

There is difficulty in selling fuel oil. The sales price needs to be between 60 to 70% of the crude price in order to be economical. Fuel oil cannot be sold to any extent in the summer due to low fuel oil demand. The sulfur content of 3 wt% is also of concern, especially as expected changes in environmental regulations will likely dictate lower sulfur levels.

Possible solutions, as developed by the refinery include:

- Maximize sulfur in the heavy fuel oil and sell it (joint venture) to one of the electricity producers who is now using brown coal. The relative heat values (coal 10.82 MJ/kg, oil 40.2 MJ/kg) and sulfur content (coal 1.0 wt%, oil 3 wt%) is such that SOx emission would be reduced by 20% if all oil were burned. Any substitution of 3 wt% sulfur oil for 1 wt% sulfur coal would reduce total SOx emissions though not to the levels expected to be specified by regulations. This is a short term solution to fuel oil sales and emission reductions. Eventually flue gas desulfurization at the power plant and refinery bottoms processing to reduce sulfur will be needed.

Addition of a vacuum unit and hydrocracker at Kaucuk for a longer term solution to sulfur reduction in products as well as upgrading lower value streams (atmospheric residue) into more valuable products.

Lead

The reduction of lead in products must be addressed. Catalytic converters are coming to the CSFR in 1993, and gasoline octane must be increased. Kaucuk has considered a 120 000 tonnes/y isomerization unit as well as converting the existing reformer to an isomerization unit rather than building a new reformer.

D. HEAT CONSERVATION

1. HEAT TRANSFER PRACTICES

Kaucuk Refinery was designed as a heat integrated complex (that is, heat utilization is not confined to the heat generating unit, but is recovered and used in other units in order to optimize heat recovery) from the crude oil heat exchange train to the storage of major end products. This heat integration system is a key factor for a relatively low total heat consumption per tonne of crude. Some critical items in the heat exchange are covered in Sections C.2 through C.9.

2. UNIT HEAT BALANCES

There is some heat exchange between units and therefore it is difficult and not very useful to separate individual units. The total heat balance has been calculated and is shown in Section B.1. For comparison, some utility consumptions for individual units are shown below in Table D.2.1. The data presented in the table are derived from the operations report daily balance.

TABLE D.2.1 - REFINERY UNITS UTILITY CONSUMPTION

	Feed Rate tonnes/h	Fuel tonnes/h	Steam 0.6 MPa tonnes/h	Steam 1.6 MPa tonnes/h
Crude Distillation Unit	369.2	3.69	5.03	-
Naphtha HDS	64.2	0.89	0.5	-
Catalyst Reformer	42.1	1.73	0.5	-
Kerosene HDS	34.5	0.25	0.5	-
Gas Oil HDS	81.6	0.49	0.5	-
Gas Desulfurization	9.98	-	4.99	7.72
Gas Separation	11.48	-		
Sulfur Unit	0.58	0.02		

16

3. HEAT TRANSFER EQUIPMENT ANALYSIS

3.1 Fired Heaters

In addition to the reformer furnace (three compartment shaft-type heaters), there are vertical cylindrical furnaces with oil / gas burners. In the last few years, natural gas has been added and the furnaces are gas-fired only. Flue gas temperatures and excess oxygen are indicated in Table D.1.3. Combustion air preheat for two systems, covering crude, reformer and HDS heaters is under study and design.

3.2 Heat Exchanger Trains

The actual temperatures in the crude heat exchange are close to the design figures. A crude unit heat exchanger pinch analysis was performed by the refinery engineering staff with results reported as inconclusive. At this time, the refinery does not see an opportunity to use low level heat.

Further, Nalco has reviewed the crude heat train, utilizing an unidentified heat exchanger simulation program and reported that fouling was not unusual. The exchangers had been cleaned prior to our visit, and fouling was not felt to be a problem. There are difficulties in the naphtha HDS heat exchange train with ammonium chloride deposition and corrosion. To improve heat efficiency and reduce corrosion in the naphtha HDS unit, installation of a hot separator is being evaluated by the refinery staff.

3.3 Waste Heat Recovery

Waste heat recovery systems are described in Section B.7, Energy Recovery Systems.

3.4 Economics of Increasing Surface Areas

Installation of new equipment for flue gas / combustion air heat exchange has been suggested. Payout time is about two years. Other cases of improved heat exchange are still under consideration. As an example of the economic driving force behind improving heat transfer, if fuel oil is valued at 3 000 Kcs/tonne at (30 Kcs/U.S.$), an increase in crude exchanger efficiency of 10 °C would save about $250 000/y.

4. STEAM SYSTEM

4.1 Steam Balance and Utilization

The total steam balance of the refinery is positive. The majority of the steam is used within gas desulfurization and gas separation plants.

4.2 Selection of Pressure Levels

Two pressure levels of steam are used in the refinery - 1.6 MPa and 0.6 MPa. The same pressure level steam is produced in waste heat boilers and furnaces. The 9.6 MPa pressure steam is only used to drive turbines in the power station.

4.3 Condensate System

A six-stage evaporator is used to make distilled water for generating the 9.6 MPa high pressure steam. For the low pressure steam systems, the water plant produces high quality softened water. To conserve the distilled water condensate, the power station feeds 1.6/1.7 MPa extracted steam from the turbo generators to the tube side of reboiler type exchangers. On the exchanger shell side, 1.6 MPa softened water is fed, producing 1.6 MPa steam. The tube side distilled water condensate is put into the station condensate system and reused as high pressure boiler feedwater. The 1.6 MPa softened water steam is sent to the refinery where its condensate is dumped to the cooling water system, due to the high possibility of oil contamination.

Hot condensate (mainly from the 0.25 MPa system) is sent to Kralupy for building heat and hot water. Almost all of this condensate is returned. Only 40% of the softened water steam condensate is returned to the power station from the chemical plant. If this condensate is found to be contaminated, it is dumped to waste water. In the refinery, 1.6 MPa condensate is used as boiler feed water for the 1.6 MPa steam made in the reformer furnace.

4.4 Insulation

Standard refinery insulating systems are used. Furnace walls and vessels were briefly scanned using a thermo-optical pyrometer, and no unusual problems were revealed. Generally the insulation is in reasonably good condition.

4.5 Potential Effect of Energy Savings Projects to Steam Balance

Steam production and steam consumption is indicated in Section B.1. These figures reflect the near self-sufficiency of the refinery for steam. There is a small deficit of 1.6 MPa steam (1.6 tonnes/h) and excess of 0.6 MPa steam (7.9 tonnes/h). It must be remembered that the power station is a cogeneration plant and that as the refinery lowers its usage of steam, less electrical power will be produced.

As an aside some U.S. refiners, as they have become very energy efficient, have gone to gas turbine drives for their power station generators so as to become electrically self-sufficient as a cost reduction measure. This move in the US was a function of US tax laws, energy pricing and demand charge structure. It would be wise to review CSFR pricing and laws in this respect.

5. HEAT REJECTION SYSTEMS

5.1 Cooling Water Systems

The single convection (natural draft), cooling tower was inspected and determined to have 15% of its water distributor heads inoperative. It was suggested that an independent tower test be conducted before and immediately after corrective maintenance.

At present, the cooling water system is fully taxed with the present refinery configuration. There are no apparent additional energy losses except as production is varied and summer ambient conditions become extreme. All refinery units are now operating at a lower pressure as an energy saving measure. This results in poorer condensing ability, especially in the summer.

The cooling tower outlet temperature varies between 23 and 30 °C (winter/summer). The cooling circuit is designed for a 10 °C difference, but the refinery is happy with a 6 °C difference in the summer.

The lower system temperature difference in the summer, coupled with the inoperative distributor heads, led the team to strongly suggest that the cooling water circuit, including tower, be evaluated and repaired. Original system design basis and water flow rates were not available for review.

The refinery receives river water from the chemical plant eliminating the need to pump for their own supplies. See Section B.5. - Cooling Water System for more information on Kaucuk's cooling water systems.

5.2 Air Coolers

Kaucuk's philosophy for its use of air coolers is the same as that of U.S. and Western European refineries, namely on unit product streams to heat exchange as much as possible against other unit process streams, then to cool as much as is economically possible with air coolers, and lastly to trim cool with water to storage temperatures.

Individual fans are selectively turned on and off during cooler weather as energy saving measures. Fans are also turned off during rainstorms to prevent process upsets since their cooling efficiency greatly increases in the rain.

5.3 Equipment, Piping and Steam Heat Losses

Refinery equipment has a standard type of refinery insulation, mainly the ceramic wool covered by aluminum sheeting. A similar system is used for the hot piping. Downstream units are directly connected (without day tanks), therefore, the heat losses are relatively low. There is a heat loss in the heavy fuel oil storage that is stored in uninsulated tanks.

5.4 Recovery Systems

The waste heat recovery system has been described in Section B.7. There are still some opportunities to improve the heat recovery that have been discussed during the unit's evaluation. The following ideas are under consideration:

- Flue gas / combustion air preheat
- Hot separators in the HDS units

Better instrumentation and reduction of excess oxygen in the flue gases could reduce the heat sink. A single big stream of rejected heat, unrecovered until now, is the crude oil distillation overhead condensers (air coolers).

5.5 Tracing and Temperature Maintenance Systems

At Kaucuk, steam is used for both freeze protection and heat maintenance. Electric tracing is used in some remote tank fields where steam is unavailable and suitable low density sealed electric heaters are used to heat some field-mounted instrument enclosures.

Instrument tracing is copper and aluminum 6 mm tubing. For piping heat maintenance, 18 mm and 25 mm steel tubing is used. Freeze protection for some of the water lines also uses steel tubing. Insulation on pipelines with steel tubing uses insulation one pipe size larger than what would normally be used. No automatic temperature controls were observed on either the heat maintenance or freeze protection systems.

5.6 Use of Hot Oil Loops

A hot oil loop with a furnace heats the heavy fuel oil tanks and suction side exchangers. It preheats the oil and decreases the viscosity of fuel oil before pumping. The hot oil loop is used in this case instead of steam to eliminate steam penetration into the fuel oil causing boilover of the tank (through foaming) in the event of steam coil/tube leakage.

E. MECHANICAL DRIVE SYSTEM

1. COMPRESSOR / FANS

The only centrifugal compressor at Kaucuk is the recycle gas compressor at the Reformer Unit. The compressor is induction motor-driven. All the other process compressors are induction motor-driven reciprocating machines. The compressor has no spare and presently has problems with gas leakage through the seal. Normal seal life is two years, but the seals fail more often, leaking gas to the atmosphere. The compressor is now 20 years old and some thought is being given to its replacement. No justification for this replacement was given. The compressor is German-made (GHH) and except for the seal problem, the service was reported to be excellent.

In the refinery, all of the compressors were checked and observed to verify the database. A readily apparent problem in some of the reciprocating compressors was noted in the vibration of the concrete base foundations and transmission of the vibrations, where they become sympathetic and exaggerated at a distance. No historical files were available for maintenance analysis.

The refinery has an instrument air compressor building located just west of the crude unit. Air is furnished by a package screw compressor capable of furnishing 2110 cubic meters/hr (125 CFM) at 0.6 MPa (88 psi). The compressor is spared one-on-one. There is a large Ferox "Decin" dual column dryer with large prefilters and an after-filter, along with a steam/air heat exchanger for column regeneration. The dry instrument air left the building at 0.56 MPa (82 psi).

The induced draft axial fans for the rotary kiln incinerator and the two 1.6 MPa boilers at the power station are also induction motor-driven.

2. SPECIAL PUMPS

There are no special pumps (such as liquid ring pumps, etc.) at Kaucuk.

3. ELECTRIC MOTORS

Almost all of the refinery motors are of domestic manufacture. All the motors on the process units are totally enclosed fan-cooled (TEFC) and explosion-proof (XP). They are suitable for service in Division I and Division II, Group D areas (refinery process units) as defined by API RP-500A.

Motors 160 kW and over are powered at 6 kV, while those under 160 kW are powered at 380 volts. As a possible energy reduction measure, Kaucuk should investigate the economics of high efficiency motors when purchasing new motors.

To summarize, with all its mechanical drives being electric motors, Kaucuk has an efficient, relatively low maintenance and reliable mechanical drive system, as long as it's electrical system remains secure and highly reliable.

4. STEAM TURBINES

There are no steam turbine drives on any of the refinery's units. The only steam turbines are those in the power station driving the two electric generators and some of the boiler feedwater pumps. Some of the boiler feedwater pumps need to be turbine-driven, so that steam can continue to be produced upon electric power failure and more importantly, to provide water to cool the boiler tubes and drums during the failure period.

5. SPECIAL EQUIPMENT

There is no special mechanical equipment such as vacuum steam ejectors at Kaucuk.

F. MAINTENANCE / MECHANICAL OBSERVATION

1. OVERALL IMPRESSIONS

The refinery was visited just after the annual turnaround had been completed. Housekeeping and turnaround maintenance appeared to have been thoroughly completed and on time, although there was no way of verifying such by CPM records. The Maintenance / Mechanical Engineering Department was very strong on practical maintenance with long experience, but exhibited a weakness in the area of mechanical engineering solutions. As a consequence, process engineering had usurped the traditional Mechanical Engineering duties. Mechanical audits, the search for mechanical improvements, and the initiation of mechanical projects were lacking.

Off-site warehousing, shop fabrication (vessels, heat exchangers, pipe spools), and shop repair appeared adequate in light of a past history of survival by self-sufficiency and a limited purchasing of maintenance items.

2. UNIT REVIEW

The process units for the Kaucuk Refinery are arranged in a compact form with the battery limits of one unit being the battery limits of the adjacent unit. This arrangement allows the use of one large natural draft cooling tower and one large tall stack (10 meters base diameter by 160 meters height) by the process heaters.

The OSBL (Outside Battery Limits) facilities were also close by. The crude station is about one fifth of a kilometer north of the crude unit, and the fuel oil and gasoline blenders are about the same distance east of the units. The water and wastewater treating facilities are about 0.5 km northeast of the process units.

All of the above units were reviewed for layout of equipment, maintenance practices, energy saving practices, possible pollution problems and instrumentation, electrical and mechanical equipment condition and possible problems.

The crude stations are located about 1/3 of a kilometer north of the crude unit. The first crude station is manually controlled except for the motor operated valves (MOVs) on the line carrying crude to the Atmospheric Distillation Unit. The other newer station is set up for automatic operation from the refinery control room. The pumps have MOVs on both inlet and outlet and on the connections to the lines that run to and from the crude unit and storage tanks.

There are four storage tanks, 31 000 cubic meters (94 000 bbl.) for each station. There is a concrete dike around each set of four tanks. The newer station has concrete paving inside the firewall with a plastic sealer under the paving. A small dike, about 1/3 of a meter high and about three meters out from the tank, extends around each tank. There are two mixers mounted on each tank.

There are three pumps in each crude station. The old station has 160 kW (214 hp) domestically built (Mez Frenstat) motors. These motors are rated at; 20.6 full load amperes, 6 000 volts, 1 450 full load rpm, and 0.86 PF. The motor drivers in the new station are 200 kW (268 hp) and Russian built. They are TEFC XP and are rated as follows; 23.4 full load amperes, 6 000 volts, 0.88 power factor, 1 480 full load speed and 93.6% efficiency. Each motor also had two indicating temperature sensing RTDs with high/low switches.

3. EQUIPMENT CONDITION SUMMARY

3.1 Fired Heaters and Boilers

A three-compartment vertical type heater (Equipment #H32512) at the reformer was examined for design, performance and maintenance to support the possible recommendation of adding a preheater. The heater is fuel gas fired, heat-tight and without leaks. Interconnecting pipe is adequately insulated and in good repair. Data collection for flue gas composition could not be independently confirmed for lack of test equipment. All other data are recorded from a combination of control room measurements and design statistics.

3.2 Heat Exchangers

An independent heat exchanger test was conducted over the train from crude supply through the desalter to confirm database collection with good results. Insufficient field-mounted temperature and pressure gauges and wells indicate field tests for malfunctioning individual heat exchangers are seldom a concern. Housekeeping and insulation were satisfactory.

3.3 Vessels

No issues arose regarding vessels nor did the team observe anything of note.

3.4 Rotating Equipment

All pumps in the refinery were observed to verify operating equipment specifications for matched drives. Problems recur on older service centrifugal pumps (± 40 years) in high pressure and high temperature service. These problems result in seal failures and bearing failures. Analysis was made impossible by the lack of statistical data in the form of historical files. In the same manner, all compressors were observed to verify the database.

The crude unit feed pump can only be operated over a narrow discharge pressure band. If the pump pressure is increased over 2.8 - 3.0 MPa, the crude heat exchanger train starts to leak. If the pump pressure is decreased below 2.2 - 2.4 MPa, the crude reportedly starts flashing in the exchanger train. The feed pump's design outlet pressure was originally 35 atm. The impeller has been turned down to effect the lower pressure and save energy.

While the team was at Kaucuk, the reformer was brought on stream after a turn-around (TAR). During the night, the feed pump had a bearing failure and the unit was brought down. An in-line spare exists, but the refinery had been unable to repair it during the TAR. This pump has a history of bearing failures.

The reformer turbo compressor is not spared. Normal seal life is two (2) years, with loss of sealing oil resulting in gas leakage as an operating problem. The compressor is 20 years old and some thought is being given to replacement (no justification for replacement was presented). The unit is German made "GHH" with service reported to be excellent.

At the minimum operating capacity of 28 tonnes/h, the unit's feed pump loses suction. The system stabilizer column reboiler is also a problem at low capacity, in that insufficient heat is available for proper operation.

See Section E - Mechanical Drive Systems, for further information on rotating equipment.

3.5 Steam System

The steam supply lines were inspected in the pipe rack, from the power house orifice taps through the common carrier steam lines to the refinery orifice taps and to major unit users. All lines were found to be tight and in good repair. Insulation repair and replacement was observed to be in progress and was judged to be adequate and to specification. However, insulation jacketing was not painted against corrosion and pipe identifying nomenclature was worn and inadequate. The steam to condensate interface was by trap and orifice plate.

For Kaucuk, steam trap replacement and repair is a never-ending problem. All steam traps are examined prior to TAR and all the bad traps are then changed out before startup. The normal refinery trap repair practice is to replace all of the trap internals.

3.6 Piping and Valves

The process piping and valves were surveyed at random. In general, the piping appeared to be in good shape, exhibiting good maintenance practice and housekeeping. No Outside Battery Limits (OSBL) or Inside Battery Limits (ISBL) pipe stanchions, racks or supports were observed to be fire-proofed.

The facilities for testing and maintaining pressure safety valves (PSVs) were inspected. The plant shop tags, bench-tests, does follow-up maintenance and keeps records for all PSVs. Kaucuk's normal practice during a TAR is to inspect, do any necessary maintenance, and bench-test all the unit's PSVs. An historical record is kept for each PSV. A very adequate set of spares are kept for the refinery's PSV.

Kaucuk did not have portable thickness and corrosion measurement equipment. As a result, no on-stream corrosion prediction and verification work is done between TAR's. The refinery also needs to start installing corrosion coupons for long-term corrosion rate predictions and metallurgy choice determinations.

3.7 Instrumentation

As a general statement, the Kralupy refinery appears to be well instrumented. It is about on par with a US major's refinery that was built about 30 years ago and has since then been moderately upgraded. Almost all of the field instruments are pneumatic. The flow meters and differential pressure (DP) meters are Kent-Tieghi (British-Italian), a force balance diaphragm type, modeled after the Foxboro 13A DP cell. Turbine meters (German) are used for measuring the crude unit's input stream and for distillate and gasoline blending. Positive displacement (PD) meters are used on almost all unit product output streams and the heavy fuel oil blender.

There is up to an 8.8 wt% variation in process unit weight balances. As an example, in March 1991 the Naphtha HDS unit showed an 8.8 wt% loss, the Kerosene HDS unit a 3.8 wt% gain. The discrepancy is reported by the refinery to be the difference between orifice plate feed measurement and more accurate product measurement (turbine meters). Feed, therefore, is more accurately determined by the sum of the products. Product storage tank measurements are reported to agree with product metering.

Most of the level meters are domestically built float displacement type, though there are some DP levels. Temperature measurements are made with "J" and "K" thermocouples, 100 ohm platinum RTDs and bi-metallic temperature indicators. Pressure transmitters and gauges are domestic manufactured bourdon tube types.

The Kralupy refinery is controlled and monitored from one control room, located on the second floor of the refinery service building, located about 100 meters south of the crude and reformer units. The main control board is semi-graphic, mostly miniature pneumatic instruments and divided into an east and west section. The pneumatic board instruments are domestically made and consist of 6" x 6" recorders, 3" x 6" controllers (PI), 3" x 6" indicators and 3" x 6" manual controllers. The temperature controllers are domestically made 4" x 6" controllers (PID) with 100 ohm platinum RTDs or T/C inputs and 4 - 20 mA outputs. There are a few other electronic controllers with 4 - 20 mA inputs and 4 - 20 mA outputs.

Also, in the control room is a Honeywell TDC-3000 distributed control system (DCS). It consists of two 2-CRT consoles (A&B) plus one 3-CRT console (C). The system is now configured to control up to 96 loops. At the present time, 50 loops are on DCS control, with their respective board mounted controllers being used as the redundant backup. The loops on the DCS are mainly critical control loops, cascade loops and advance control loops. The refinery has been restricted in its use of advance controls, as their present computer system is too slow to do calculation functions. They are therefore limited to what can be accomplished in the control logic and computation blocks in the TDC-3000 system. The slow computer (Honeywell DPS6-55) purchase resulted from the former US restrictions on the exportation of computers to Eastern Bloc countries. The refinery has bought a third 2-CRT console and universal station for the TDC-3000 and they are being used for training and advance control design.

There are seventeen people (including a supervisor) doing the process control maintenance for the refinery. Five of the craftsmen are on shifts, while the remainder work days, Monday through Friday. During TARs, all of the seventeen, that are available, work the TAR. They are supplemented by Kaucuk's central maintenance control group.

There are two gas chromatagraphs (GCs) on the process units. One GC is used to control the H_2S / SO_2 ratio in the Claus reactor on the sulfur plant. The other GC is does a H_2 through C_6+ analysis on the LPG unit. This GC is capable of analyzing six streams, but normally is only connected to two or three streams. There are also three GCs in the refinery lab for lab analysis. All five GCs are monitored by the Honeywell DPS6-55 computer that is part of the TDC-3000 DCS.

Advance Controls

With the implementation of distributed control system (DCS) on their process units, the opportunity for a greatly increased use of advance controls and stratagems dawned for US refineries. It became apparent to many of these refineries that the increased profits from advance controls would quickly payout on analog instrumented process units, the costs of a DCS and the advance controls. One US major decided to convert all its refinery process controls to DCS; their experience was that it normally took four (4) to twelve (12) months of the new control's operations to recover the DCS/Advance control costs for almost all units.

With the implementation of DCS, the following unit advance controls should be considered:

- Crude Units

- Decoupling the side draws - This control allows the board operator to increase / decrease a product draw (changing that product's IBP and EBP) without upsetting the other product sidedraws.

49

- Cutpoint calculation - This control replaces an expensive high maintenance analyzer. Calculating and inferring boiling point measurements such as 95% point from tower measurements. This measurement can then be used for tower control.

- Pumparound control - This control looks at the pumparound flows, temperature, energy use and heat transfer and determines the economics of increasing / decreasing pumparound to increase / decrease products flow.

- Reformer Units

- Reactor optimization - Controls reactor temperatures to optimize the catalyst life vs octane number output.

- Prefractionator control - Sharpens fractionation so as to minimize catalyst poisoning heavy ends and non-retractable light components in the reactor feed, thereby increasing the reformer's octane barrel output.

- Hydrogen Desulfurizers

- Hydrogen control - Ratio hydrogen to feed to smooth flow, enhance the desulfurization reaction and extend catalyst life.

- Furnace / Heaters

- Furnace air control - Regulate the combustion air to minimize excess air and prevent smoke formation.

When starting an advance control project, a 'process audit' covering those areas that the advance controls will impact, needs to be made. This audit should show all pertinent data such as flows, process condition, energy usage, product quality and stream values. This establishes the baseline. Later, three (3) to four (4) months after implementation of the advance controls a final process audit needs to be taken. This audit collects the same data that was taken for the starting audit. With the data from the two audits, a final report can be issued showing the actual savings vs the estimate savings and reasons for any differences. Besides establishing credibility for the project estimate and payouts, it also provides the feedback necessary to improve the savings estimating.

Ideal members of this final audit team are the advance control engineer, the process unit operations engineer and one of the consulting engineers, if used. With the high degree of savings seen on advance control projects, there is usually a push for their rapid implementation. This push, plus a lack of availability makes it prudent to hire outside expertise, i.e. consultant. This an opportunity to upgrade the facilities staff expertise. A staff advance control engineer should be assigned to work with and monitor the consultant. On later projects, this will allow more (or sometimes all) of the same type of work to be done in-house.

3.8 Electrical Equipment

The coal fired power station is operated and managed by Kaucuk's Energy Division and is not considered part of the refinery per se. A description of the electrical side can be found in Section B.4.1, Electricity Sources / Generation. Power is generated at 6 kV and this is the voltage used for plant distribution.

The electrical power on the refinery units is as follows:

6 000 volts -	incoming distribution voltage and is used to power refinery motors 160 kW (215 hp) and up
380 volts -	used to power motors below 160 kW and supply power to the desalter and welding machines
220 volts -	normal refinery lighting
24 volts -	safety lighting

Almost all 380 volt motors are of domestic manufacture (Mez Frenstat) with the few remaining motors being mostly of German manufacture. The 6 kV motors are mostly of domestic manufacture (Mez Frenstat) with a few Russian motors, except for the compressor drives which are mostly German (Siemens) with one or two Russian drives. All of the refinery motors are "totally enclosed fan-cooled (TEFC)" explosion-proof (XP).

The refinery grounding practices are very good. All piping, structures, walkways and equipment are grounded. The main ground conductors being used are green-jacketed copper wire and galvanized iron bar that is approximately 1/8" x 1-1/4".

The daily maintenance of the 220 volt and 380 volt equipment is done by refinery electricians. The 6 kV equipment is serviced by the Energy Division electricians. During TAR's, both groups of electricians (and their supervisors) are supplemented with personnel from the central maintenance group.

The refinery has a good, well-maintained electrical system. This system has been engineered and implemented to provide a high degree of system reliability. In future years, for motor replacement, the economics of high efficiency motors and for some applications, variable speed motor drives should be considered.

3.9 Corrosion

Prediction of corrosion and erosion was reported by the maintenance group as a general problem before commencing a turn-around. Ideally they wanted to plan turn-arounds by measuring conditions in advance and pre-spooling pipe. In order to assess conditions, the group needs placement of corrosion coupons in line and portable non-destructive equipment to test pipe thickness.

3.10 Insulation Condition

Standard insulation practice is used in the refinery and found to match the design specifications.

3.11 Specialty Items

Two electronic in-line blenders made by Jiskoot (British) are mounted on the control board along with an Enraf, Nonius Delft (Dutch) "Minilect" tank gauging system. The first blender is used for blending diesel fuel and fuel oil. It is a two-component blender and utilizes Bopp & Ruether (German) PD meters. The blender has two component stations (percent) and a master controller (totalizer). The second blender is for blending gasoline and consists of five component stations (3 naphtha products, reformate and TEL blend), a two-component ratioing station (additives), a component station (butane) and another component station (MTBE). The blender utilizes turbine and PD meters.

4. MAINTENANCE

4.1. Policies

The maintenance policy of Kralupy has, to a large degree, been severely affected by the plant organization, past budgetary procedures, state central planning and lack of software to plan, schedule, interface inventories and collect equipment historical data. Considering the refinery as a division of a larger plant, the maintenance organization consists of two maintenance superintendents and an engineer, within the division. About 20% of the craft labor and supervision is directly assigned to the refinery and to the chemical plant. The remaining 80% of the direct supervision and craft labor is pooled at the plant level, making for "discovered" matrix management and difficulty in setting priorities. Further, warehousing, purchasing and shop services are also organized at the plant level, complicating authority and responsibility.

4.2. History

In the past, the requirement to forecast maintenance requirements over an extended fixed period, without a quarter-course forecast review, has caused division maintenance superintendents to pad requisitioning and overstock warehouse inventories. With the exception of safety valves, the wherewithal to maintain historical data on the majority of equipment does not exist. This, of course, encourages overstocking and causes errors in the forecast.

The lack of a CPM planning and scheduling package, coupled with a cost budgeting and tracking addition, adversely affects scheduled turn-arounds. A total maintenance system to improve overall organization and management of maintenance operations and provide complete equipment/parts inventory control system does not exist.

4.3. Current Practices

Practicing maintenance and attempting to solve mechanical engineering problems without the benefit of installed and portable non-destructive test equipment is normal at Kralupy. The lack of normal statistics recording for mechanical performance leaves the superintendent and engineer without the proper tools to initiate a preventive maintenance program. Further, research into problem parts, assemblies or machines is impossible without a historical database.

It was recommended that the refinery form an energy audit group to include a maintenance superintendent and a safety engineer. The group would be charged with conducting inspections with the authority to prioritize and order work contributing to energy conservation and safety.

G. ENERGY LOSS MONITORING SYSTEMS

No improvement is needed in Kaucuk's process stream measurements, as all unit product streams and crude input are measured by turbine or PD meter. High reliability is insured by the meter vendor choice and one-on-one spares.

What is needed are reliable oxygen analyzers to measure oxygen in flue gas. An "in situ" type, where the measuring cell is installed in the fire box or flue stack (such as a Westinghouse-Hagen) should provide the accuracy and reliability needed.

The measurements for a reliable energy usage database are for all intents and purposes either already being gathered or easily added. What is needed is to gather this data systematically (a Honeywell DPS-6 is available), identify the problem energy usages and losses and any significant energy trends. Then a program can be initiated to start minimizing these losses.

Energy use monitoring should allow charging the process units, on some calendar basis, for all their various energy usages. Accountability for the efficient usage of energy by the various refinery units, can then be established, so that goals and accountability to reduce the energy usage can be set and monitored.

The TDC-3000 DCS allows tracking of energy usage on the process units and with the advance controls now being installed, methods for minimizing the energy per tonne of crude processed.

A difficulty in implementing energy saving projects is availability of funds, not opportunities or solutions to problems. Capital budgeting practices may need review. With the previous national central planning system there was minimal incentive for improving local facility energy efficiency. As a consequence, energy efficiency was a low priority item for the operating staff. Refinery management now puts a high priority on energy efficiency, but this has not filtered down to the operating and maintenance staff. Staff motivation in this area is vital and needs to be addressed.

To summarize, much good work has been done by the Kaucuk staff to reduce energy consumption and their continued efforts will insure future success. Kaucuk now needs to get its energy metering measurements into an accessible database and finish implementation of its DCS on the process units. Then this information can be used to identify energy loss problems, energy use charges, and energy usage trends and also be available for use in advanced controls schemes to minimize energy usage.

H. FUEL SWITCHING / UTILIZATION

1. REFINERY FUEL SYSTEM

All the furnaces in the refinery are gas-fired. A mixture of refinery off-gas and natural gas is used as fuel. More details about the fuel system are presented in Section B.2.

2. GENERAL REVIEW OF POTENTIAL REFINERY USE FOR COAL

The availability of native coal makes a review of coal as an energy source of interest to the national economy. A study on the use of coal as an adjunct or substitute for hydrocarbon fuel streams is, therefore, included in this evaluation.

Heat is provided to a process stream by burning a variety of fuels in directly fired heaters. Generally the fuels are a collection of effluent streams from the various operations around the refinery complex in both gaseous and liquid forms.

Coal is frequently used in industry as a fuel source. Generally it is used on large capacity boiler units. There are significant base investment and operating costs and activities associated with feed and ash handling equipment, sulfur removal, etc. that can be charged out over large installations, but prove too prohibitive in the economics of small units.

There are many ways of utilizing coal as a fuel. Probably the most applicable to the situation at hand are discussed below. The first two, direct coal firing and coal gasification, are discussed in some detail. Several others, such as coal liquefaction, coal-oil mixtures, coal fired gas turbines are touched upon briefly.

Coal usage in existing refinery process heaters would most likely be restricted to one of the methods in which a product fuel can be produced in one location and piped to the various users. Plot space in the vicinity of the existing furnaces along with safety considerations typically does not allow for coal and ash storage and handling facilities within the refinery processing area. Also existing equipment is not designed for the particulate loading experienced in the flue gas with coal firing. In addition, any required sulfur removal equipment would have to deal with flue gas clean-up on an individual process heater basis if there were not a central coal processing facility.

2.1 Direct Coal Firing

Coal usage is not a simple thing anymore. Gone are the days of stoking the fire by shovelful of run-of-mine coal and just letting it burn. Coal may need to go through physical cleaning, sizing and drying just to get it to the furnace. Burners are specially designed to achieve optimum efficiency and low NOx emissions. Additives are injected to reduce ash sticking to heater tube walls, reduce SO_2 in the flue gas, etc. Flue gas may be subjected to further treatment such as wet scrubbing to reduce SO_2 to tighter levels of environmental acceptance.

Traveling grate burners bring the coal automatically to the burning chamber where the coal is combusted. Coal with a moisture content much above 30% must be dried before burning, so lignite / brown coals would most likely need pre-combustion drying. Hot under grate air can be used for this purpose. Ash builds up on the traveling grate until it drops into a hopper. The ash is later removed from the hopper. Sulfur must typically be dealt with after combustion if removal as sulfur oxides is necessary. Add on SO_2 equipment adds significant cost to a unit.

Modern direct coal burning systems include atmospheric and pressurized fluidized bed combustion (AFBC and PFBC) units that provide for gas burning, clean-up and heat recovery all in one unit. Limestone is used as part of the fluidizing medium and the calcium present in it reacts with the SO_2 before it is able to escape from the combustion chamber. The result is a non-toxic disposable solid by-product and low SO_2 containing flue gas.

FBC technology is applicable to a wide variety of fuels including a wide range of coals, residual oil, petroleum coke, etc. AFBC technology for boilers is available commercially from a large number of licensors, while PFBC technology is still considered to be in the development stages. The application of FBC technology to a process heater may be possible, but it would require extensive pilot test runs and special considerations in equipment design.

2.2 Coal Gasification

Coal gasification has been utilized for a long time and there are several companies (Texaco, Lurgi, IGT, KRW, etc.) that have commercialized processes. The product from the gasification (H_2, CO, CO_2, + others) operation can be used as a chemical feedstock or a fuel gas. To produce a fuel gas of medium range heating value (9.3 - 18.6 MJ/m^3 or 250 - 500 Btu / SCF) suitable for burning in a process heater, oxygen must be used in the gasification. Because of the reducing conditions present in the gasifiers, most of the sulfur in the coal is converted to H_2S. H_2S can be reliably removed from the gas stream by a number of available processes. In addition, it can further be turned into elemental sulfur or sulfuric acid.

Development work is being done for in-situ desulfurization in a fluidized bed coal gasifier. This process is much the same as the PFBC except that the product is a gas with a heating value instead of combustion product gases. It is also similar to the FBC technology in that it can utilize a wide variety of fuels, such as the sour residual oil produced within the refinery.

Fuel gas produced in this way can be piped into a plant fuel header and used anywhere around the facility. The attractiveness of this option is that the coal usage and gas clean-up facilities would be in one central location, while the fuel users could be in many different locations.

Another possible use of the gas produced via gasification could be as a fuel to a gas turbine. The gas turbine could be used to generate electricity or to provide a direct large capacity mechanical drive such as a compressor. The thermal efficiency of a gas turbine is typically raised by using the turbine exhaust gas to raise steam in a waste heat boiler, in what is called co-generation.

Given the availability of coal in Czechoslovakia, coal gasification technology should be watched closely and given full consideration at such time that energy economics dictate its use. The selection of the proper technology to best fit the local brown coal characteristics should be kept in mind. In-country technical experts, we understand, are very well aware of the various technologies and are keeping abreast of current developments. Initial investment cost is high and although a project may be justified from a DCF or NPV basis, a shortage of hard currency may delay or defer action. Despite the above potential, however, it is reported that only a 30 year supply of coal remains in-country, which is reserved for existing coal fired facilities. The likelihood, therefore, of utilizing this coal reserve for gasification is very low.

2.3 Other Technologies

Coal liquefaction

Production of liquid fuels from coal can be either indirect or direct. In indirect liquefaction, the synthesis gas produced in a gasification step is further reacted to produce a readily burnable fuel (via the Fischer Tropsch process to naphtha, diesel and waxes or via syngas to methanol to gasoline). The Sasol facility in South Africa is an example of this process. Since the gasification product would be an adequate fuel for the heaters on a refinery, there is no need to go beyond that step to liquid fuels.

Direct liquefaction producing a No. 2 type fuel oil would be more applicable to the fuel needs in a refinery. Several processes have been developed since the 1960's including H-Coal, SRC-I, Exxon Donor Solvent, SRC-II, etc. (in the U.S.). The high cost and inefficiency associated with these processes led to the cutback of further development of the technologies as they were. The early processes have continued to be modified and further developed by the United States Department of Energy (U.S. DOE) and industrial partners into Two-Stage liquefaction processes. These processes are still not available on a large commercial scale. Estimates are that the cost of a barrel of oil produced by coal liquefaction using such methods will approach $25 / barrel by the late 1990's.

Coal-based gasoline production was used during WW II in Litvinov, using selected types of Bohemian coal. After the war, the plant shut down as economically unfeasible. The newer, modern processes of coal liquefaction were evaluated but not commercialized.

Coal oil/water mixtures

The use of coal slurried with oil or water to produce a usable fuel is also the subject of numerous studies and optimizations. There are even annual conferences on "Coal & Slurry Technology" sponsored by the Coal & Slurry Technology Association and the U.S. DOE's Pittsburgh Energy Technology Center (PETC). Coal water mixtures can be prepared with up to 70% solids, while current technologies and pilot plant results show coal oil mixtures are limited to 30 - 50% solids. Coal oil mixtures could be prepared in one location and pumped around the plant to the various process heaters. However, emissions in terms of SO_2, NOx and particulates would be a problem at each furnace.

Coal-fired gas turbines

Direct coal-fired gas turbines are being developed and improved by General Electric, Westinghouse, United Technologies, etc. The use of gas turbines in this manner on the refinery would most likely be restricted to electricity generation. Solids and impurities deposition on blades and casings would likely require frequent cleaning and duplication of equipment would be required to even out loads. Environmental control requirements would also likely limit the application of this technology to high quality coals.

Fuel cells

The combination of coal gasification and emerging fuel cell technology presents an attractive high efficiency electric and heat energy generation possibility. Current projections, based on work sponsored by the US DOE, indicate a fuel cell efficiency between 45 and 55% compared to standard power plant Carnot Cycle at 33 - 34%. The H_2 and CO rich gas from coal gasification is suited to fuel cell use, with CO_2 used in the cathode side of the cell.

Of the four major fuel cell technologies, two are worthy of mention here, phosphoric acid and molten carbonate. Phosphoric acid fuel cells are at a more advanced state, however, they operate in the range of 400 °F compared to molten carbonate cells at 1200 °F.

The molten carbonate fuel cell is best suited for use with coal gasification in applications where there is need for high quality heat. The exhaust gas temperature of 1200 °F is useful in the generation of high quality steam for process purposes. The use of bottoming cycles further enhances the system. Overall efficiencies, electrical and utilization of exhaust gas to generate steam, are in the order of 80%. The DOE is sponsoring sub-megawatt tests of commercial sized units; these tests are scheduled for the 1993 calendar year. While the technology is not quite ready for commercial use, it is potentially attractive and should be watched closely.

3. COAL AT THE KAUCUK REFINERY

3.1 Availability and Characteristics of Coal

Brown coal is available in CSFR in the northwestern part of Bohemia in the Most-Litvinov region. The quality of remaining coal is poor and continues to degrade. A typical analysis is as follows:

Component	wt%
Moisture	24.3
Ash	31.2
Carbon	29.3
Hydrogen	3.3
Sulfur	1.0
Nitrogen	0.4
Oxygen	10.5

The net heating value is 10.82 MJ/kg.

3.2 Potential Use

The power plant is the most logical place for using coal in the Kaucuk Refinery. It is reported that there is only a 30 year supply of coal remaining in the country, which is reserved for existing facilities. Additionally, the capital intensity required for new coal facilities make the potential of coal use in the refinery very low. The issue of utilizing the previously mentioned technologies and imported coal, i.e. from Poland, needs to be evaluated technologically and economically on a specific application basis.

3.3 Economics of Use

No economical calculation has been made although the investment required for gas handling, fired heating modification and flue gas desulfurization is such that the postmark for use is very low.

BIBLIOGRAPHY

Cooper, B. R., & Ellingson, W. A. (1984). The Science and Technology of Coal and Coal Utilization. New York: Plenum Press.

R. Dellefield (personal communication, July 19, 1991). Morgantown Technology Center, United States Department of Energy. Morgantown, West Virginia.

Engineering & Economics Research, Inc., Hagler, Bailly & Co.,Inc., PEI Associates Inc., Spaite, P. W. (Eds.). (1986). Emerging Clean Coal Technologies. Park Ridge, NJ: Noyes Data Corporation.

Ekmann, J. M. (personal communication, July 15, 1991). Coal Combustion Division, Pittsburgh Energy Technology Center, United States Department of Energy. Pittsburgh, Pennsylvania.

Feldkirchner, H. (personal communication, July 11, 1991). Institute of Gas Technology. Chicago, Illinois.

Lord, N. W., Ouellette, R. P., Farah, O. G., & Cheremisinoff, P. N. (1982). Coal-Oil Mixture Technology. Ann Arbor, Michigan: Ann Arbor Science Publishers.

McGurl, G. V. (1990, March). Two-stage liquefaction of coal. PETC Review. Pittsburgh, Pennsylvania: Pittsburgh Energy Technology Center.

Podolski, W. F. (personal communication July 19,1991). Chemical Technology Division. Argonne National Laboratory. Argonne, Illinois.

Scowden, J. (personal communication July 15, 1991). Detroit Stoker. Monroe, Michigan.

Stauffer, C. (personal communication July 11, 1991) Process Sales Company. Houston, Texas.

Vander Molen, R. H. (personal communication July 19, 1991). Combustion Power Company. Menlo Park, California.

I. REFINERY EMISSIONS

1. SUMMARY OF ENVIRONMENTAL SURVEY

1.1 Refinery Sulfur Balance

With a feed rate of 3.0 x 10^6 tonnes/year of crude oil and a sulfur content of 1.5 wt%, the approximate sulfur balance, based on a 1990 product mix, is as follows:

Sulfur in	Tonnes/Year	
crude oil	45000	
Sulfur out	**Tonnes/Year**	**% Sulfur in Product**
LPG	19	0.02
Gasoline	218	0.05
Naphtha	22	0.04
Diesel	1 114	0.15
Gas Oil	37	0.15
Jet Fuel	74	0.05
Light Fuel Oil	3 057	1.64
Heavy Fuel Oil	34 210	2.7
Losses, Misc.	196	1.1
Claus Tail Gas	303	---
Sulfur Recovery	5 750	---
Total Sulfur out	45 000	

The SO_2 emission to the atmosphere from the Claus unit would then be 606 tonnes/year. The SO_2 emission from the Kaucuk complex power plant firing 1 wt% sulfur European brown coal is estimated to be 18 000 tonnes/year. It should be noted that, to the extent residual fuel oil is used internally in the refinery, sulfur emission are increased.

1.2 Air Emissions

All of the storage tanks are either fixed top with conservation breather valves or floating roofs. Oil losses to the API separators are well controlled. The refinery personnel have not estimated the amount of volatile organic compounds (VOC) lost because they consider the tank breathing losses or the losses from the API separators to be minor for the total complex.

The 1995 target is to institute a program of "sniffing" the various valves, flanges, pumps and API separators to obtain an estimate of the total tonnes/year loss. Concurrently, if excessive loss is found at any device (equipment, values, instruments, etc.), the device should be repaired.

1.3 Water Quality

The 1990 Waste Water Treatment Plant (WWTP) average effluent to the Vltava River and the current regulatory levels are as follows:

ITEM	UNITS	STANDARD	ACTUAL
Flow	cubic meters/yr	360 000	60 000
BOD	tonnes/yr	60	10
COD	tonnes/yr	300	89
Chlorides	tonnes/yr	950	193
Sulfates	tonnes/yr	685	172
Oil (extract)	tonnes/yr	130	31

1.4 Solid Waste Disposal

The solid wastes from the refinery are the tank bottoms, API separator sludge, water softener sludge, and waste activated sludge from the biological units. All of the sludges are disposed of in a rotary kiln incinerator. The sludges are press-filtered before incineration.

The rotary kiln is fired with residual oil. The hot gas from the kiln passes through a water tube boiler for heat recovery and through an electrostatic precipitator (ESP) to remove particulate matter.

Adjacent to the rotary kiln is a chamber type incinerator. The cart feeding the chamber is loaded with fiber drums of semi-solid material, bags of scrap paper or plastics and old wood boxes of scrap combustibles. The chamber is ignited with residual oil and the hot flue gas passes through the boiler and ESP.

Both incinerators were reported to be reliable and operable. There is sufficient combustion capacity for the foreseeable future.

The bottom ash from both incinerators is combined with the fly ash from the ESP. The combined ash is transported to a special landfill for industrial ash. The landfill is off-site and was constructed with an impervious liner.

1.5 Impact of Maintenance Practices in Generating Emissions

The refinery, being a semi-topping unit, is compact, well designed for pumping, flue gas control, tank breathing losses and oil loss to the WWTP. Any loss of oil or product is quickly detected and corrected.

During the observations there were no maintenance practices noted that should be revised. The systems were well maintained and monitored. A specific example of the high quality of maintenance was the very small quantity of floating oil observed in the API separator. The small amount of oil coming to the API separator is properly removed within a short time.

1.6 Evaporation Losses

The only evaporation losses are from the storage tank breathing losses and the uncovered API separator.

1.7 Loss of Products to Solvents

There were no solvents used in the refining process.

2. HANDLING OF MATERIALS

2.1 Tetraethyl Lead (TEL)

TEL is still used as an octane enhancer. Design of all equipment connected with the TEL handling has been done by OCTEL (TEL producer). Adequate care is taken in storing, handling and using TEL. The TEL content in gasolines has been reduced from 0.6 to 0.15 g/liter.

2.2 Aromatics

There is no production or use of pure aromatic compounds. A mixture containing aromatics in the catalytic reformer is produced and used in the gasoline pool. The equipment handling this material is sealed.

2.3 Solvents

No special solvents are used in the refinery.

2.4 Halogenated Hydrocarbons

Small amounts of halogenated hydrocarbons for catalytic activation are used. Precise quantities are added by sealed equipment.

2.5 Heavy Metals

The heavy metals are those which are contained in the crude. Any oil sludge or tank bottoms are incinerated. The heavy metals remain with the bottom ash or are condensed on the flv ash. Both the bottom and fly ash are hauled off-site to a special landfill.

2.6 Sulfur

Recovered sulfur is stored in liquid form. Liquid sulfur is transported off-site.

2.7 H_2SO_4, HF

No sulfuric acid or HF is used within the refinery.

2.8 Combustion Products

The refinery has reduced the SO_2 emissions from the process heaters by going to refinery off-gas natural gas mixture. The NOx emissions are controlled by observat and precise sampling and minimizes excess oxygen. The NOx emissions could be reduced by installing low NOx burners. This is not recommended until the power plant stack gases, which produces most of the combustion product pollutants, are controlled.

2.9 Tars

No tars are processed within the refinery.

3. MEASUREMENT OF EMISSIONS

No measurements of emissions were taken or observed. The plant has conducted a few measurements of the stack gas and observed the excess oxygen and carbon monoxide in the stack gas from the heaters.

4. SPECIFIC RECOMMENDATIONS

There were no observed immediate opportunities to reduce the refinery environmental conditions. Long term the addition of a tail gas plant to the sulfur unit is needed to further reduce SOx emissions. Additionally, reinstallation of the chemical feed to the flocculation tank at the waste water treatment plant is desirable when environmental standards are tightened to reduce oil and suspended solids emitted.

J. ENERGY EFFICIENCY IMPROVEMENTS

1. IMMEDIATE OPPORTUNITIES

Computer software

Kralupy has computers large enough to run the following programs, which can help save energy and improve the flexibility and total economics of the refinery. The evaluation study team suggests the following software programs:

- A process simulation program, to enable simulation of processing for other crude oils and to predict process conditions, properties of the products, critical requirements, and possible energy savings. A more complete narrative of process simulation capabilities and benefits is found in Appendix B.
- An LP model that can optimize and predict future process operations with various feedstocks and product slates.
- Software for the maintenance system that allows maintenance planning, provides a spare parts inventory, improves the flexibility of equipment, and extends the turnaround cycle.

Improve process control and equipment control

- State of the art portable combustion analyzer (CO, O_2, CO_2 and NOx), including spare parts.
- Infrared thermal analyzer gun (Thermo-Hunter 5140).
- Thickness gauging system audiogram, sonogram.
- 95% ASTM analyzer for naphtha, kerosene and gas oil.
- Octane analyzer for reformer.
- Hydrogen analyzer (reliable in presence of H_2S).

Training programs

- For furnace burner maintenance and operation.
- Continuing training in steam trap selection and maintenance.

Major burner and steam trap manufacturers offer seminars and courses that are useful for refinery personnel to help improve energy efficiency.

Technical assistance

The Davy McKee team was asked to perform a conformational computer simulation for the plants proposed naphtha HDS hot separator addition. The computation was made and results sent to Kaucuk.

Organizational improvements

Some suggestions on how to improve overall personnel awareness and save energy are:

- Appoint someone to assume direct responsibility and provoke interest in an energy saving program.
- Arrange an energy audit group that will frequently monitor the equipment and the program.
- Make energy improvement part of everyone's responsibility through setting objectives and an annual personnel review process.

2. MEDIUM TERM OPPORTUNITIES

Furnace modifications

Installation of air preheaters and automatic control of combustion air can improve furnace efficiency to 90+%. The pay-out period for the installation of such improvements in crude distillation and naphtha HDS furnaces is 1.8 years. The reformer heater and HDS heaters, are under evaluation for such improvements.

In-line gasoline blending

A software program to optimize blending calculations to achieve blending within 0.1 octane is recommended. The instrumentation, piping and metering is already in place and being used.

Secondary sealing of tanks

Will reduce product losses and improve environmental conditions.

Burner and controlling equipment for Claus unit

To improve the reliability of H_2S burning and reduce SO_2 air pollution.

Reformer feed / effluent exchanger

The efficiency and capacity of the reformer unit can be improved by replacing existing shell and tube exchangers with a single vertical shell and tube exchanger or welded plate-type exchanger.

Naphtha HDS hot separator

Installing the hot separator in the naphtha HDS unit will reduce heat consumption, pressure drop, and improve flexibility of the unit.

These and other items are reviewed and commented upon in Potential Unit Modifications, Section C.2.7. - C.9.7. Implementation is contingent upon the financial conditions of the refinery.

3. LONG-TERM CAPITAL IMPROVEMENTS

Bottoms Processing

The Kaucuk Refinery has no bottoms processing. Atmospheric residue is not processed, but is sold as fuel oil.

Alternatives in bottoms processing need further study. These include a vacuum unit and FCC, hydrocracking, thermal cracking, atmospheric residue desulfurization, and flue gas desulfurization in combination with these processes and adequate downstream units. These alternatives should be considered in light of local and European market conditions (refer also to comment in Section C.10.1.).

4. FURTHER WORK REQUIRED

In-depth technical and economic studies and evaluations are necessary to set capital allocation priorities for refinery energy and operations improvements. It is obvious, from this review, that projects such as combustion air preheat or reduction of excess air to fired heaters, that payouts and return on investment are quite attractive. Projects to manage bottoms processing, and acquisition of funds to accomplish them, require further study, taking into consideration markets, pricing patterns and expected behavior, technical and environmental changes.

J. ENERGY EFFICIENCY IMPROVEMENTS

1. IMMEDIATE OPPORTUNITIES

	Description	Cost	Pay-Off
Action:	Purchase one infra-red optical thermometer, i.e. Thermo-Hunter 5140 and Thermocouple Calibrator, model 266 and RTD Calibrator, model 267.	Infra- red Thermom. $3 000 T/C Calib. RTD Calib.	2.7 months at a fuel savings 0.1% of yearly amount due to energy awareness and subsequent heat loss remediation.
Benefit:	Allows refinery crew to measure surface temperatures and determine heat losses and / or hot spots for energy audits and trouble surveys, thereby leading to energy savings through installation of additional insulation. The refinery estimates a yearly savings of 400 000 Kcs ($13 300) by checking water coolers and heat exchangers.	Fuel consumption of the refinery is equivalent to 61 577.78 tonnes of fuel gas at price of 4 850 Kcs/tonne	
Supplier:	Capintec		

1. IMMEDIATE OPPORTUNITIES

Description		Cost	Pay-Off
Action:	Purchase attendance to a John Zink seminar covering furnace burner maintenance and operation. Alternately, a more efficient approach would be to bring a burner trainer to the local refineries or if possible presenting a seminar for representatives from all of the Eastern European refineries.	Estimated at $5 000 plus travel and expenses.	Immediate
Benefit:	Generates technological approaches, identifies burner selection alternatives, and reviews operational practices in order to improve energy consumption efficiency in furnaces. The sum of the energy consumption in the fired heaters shown is Table B.3.1. at 330 days/yr, and 51.81 GJ/tonne of fuel gas is 61 803 tonnes/yr. A conservative savings of only 2% per year would save about $200 000 per year in fuel gas utilization.		
Supplier:	John Zink Tulsa, Oklahoma USA or equivalent		

1. IMMEDIATE OPPORTUNITIES

Description		Cost	Pay-Off
Action:	Purchase portable combustion analyzer to measure stack gases: CO, CO_2, O_2, NOx, SO_2 + SO_3.	$5 000	Immediate
Benefit:	Allows independent audit of flue gases and thus adjustment of burners for improved efficiency. A review of excess oxygen (and translation to excess air levels) as shown in Table B.1.3., would yield an average excess air of just under 40%. Levels should be under 10% and closer to 5%. The burner seminar recommendation of this section indicates a conservative savings of $200000/yr through excess air reduction.		
Supplier:	Ametek Thermox Instrument Division 150 Freeport Road Pittsburgh, PA 15238 USA or equivalent		

1. IMMEDIATE OPPORTUNITIES

Description		Cost	Pay-Off
Action:	Place strong management emphasis and support for energy audit group to routinely inspect all units for immediate energy conservation through proper maintenance and process control.	Estimated one month of engineering assistance, including travel- $22 000.	Immediate
Benefit:	Continued awareness of short and long-term projects that will increase efficiency through energy conservation and reduction in energy usage.		
Supplier:	Refinery Organization If necessary, a firm or individuals with an the appropriate background in refinery energy management could be used to assist in creation of a study and provide guidelines for analyzing and justifying projects.		

1. IMMEDIATE OPPORTUNITIES

Description		Cost	Pay-Off
Action:	Accurately meter all energy into, generated in, i.e. refinery gas, or leaving each process unit. Then make all process unit superintendents accountable for a yearly improvement (a decrease) in the Joules per tonne (Btus/barrels) needed to process the feed through the unit. Preferably, this goal should be calculated weekly and sent to the refinery and process division managers monthly. Other than crude costs, energy costs are the major costs variable in operating a refinery.	$0 to $100 000 Negligible if all the energy is now metered on the process units. Otherwise, the cost of installing those meters.	Immediately, also provides a base-line for further yearly improvements. Major U.S. refineries have reduced their energy usage per barrel of crude run by over one-third during the past 17 yrs. They are now averaging about a 1 to 2% reduction per year.
Benefit:	Significantly lowers refinery energy costs. The unit superintendents must be involved; they will then involve all under their supervision on the unit.		
Supplier:	Objectives by refinery management. Equipment by competitive supplier.		

1. IMMEDIATE OPPORTUNITIES

Description		Cost	Pay-Off
Action:	Procure & install a 95% ASTM analyzer for: Naphtha Kerosene Diesel Gas Oils	To be determined	To be determined
Benefit:	Better process control of operating units resulting in improved intermediate product quality.		
Supplier:	Competitive bidding- To be determined.		

1. IMMEDIATE OPPORTUNITIES

Description		Cost	Pay-Off
Action:	Purchase one thickness/corrosion gauging package for non-destructive testing of pipe.	$3 000	Immediate
Benefit:	Allows maintenance crews the opportunity to plan turn-around work in advance of shutdown. In the long run, proper awareness of corrosion problems, and changes to manage these problems (change in metallurgy or operating practices), will result in improved on-stream time and thus profitability.		
Supplier:	Krautkramer Branson P.O. Box 350 Lewistown, PA 17044 USA or approved equal.		

115

1. IMMEDIATE OPPORTUNITIES

Description		Cost	Pay-Off
Action:	Procure H_2 analyzer (operable in the presence of H_2S) to measure H_2 in recycle gas.	Unit $15520 Start-up Assistance (Two weeks) $12 000 Spare Parts $4 000 Total Estimated Cost $31 520	Improved operations, on-stream time and operating costs.
Benefit:	Allows: • Optimization of H_2/HC ratio, for coke management throughout catalyst life. • Reduction of recycle gas compressor utilities. • Early detection of process upsets from H_2 concentration trends.		
Supplier:	UOP Monirex Systems 25 East Algonquin Road Des Plaines, IL 60017 USA (708) 391-2955 Attn: Scott Gunderson		

1. IMMEDIATE OPPORTUNITIES

Description		Cost	Pay-Off
Action:	Arrange attendance of suitably qualified staff with appropriate language capabilities to short refresher courses in "Professional Advancement" such as conducted at the Amsterdam RAI by qualified US/European instructors. Subject to availability, courses could include: Fired heaters Advance control systems Environmental & Loss control Engineering Computing Refinery Management Product Quality control	Budget: Allow $2 500 per course. Suggest an initial trial of 5 courses for evaluation of benefits.	Undetermined but would expect a pay off in 1 year through improved competence.
Benefit:	To introduce participants to state of the art techniques, methodologies and practices in their specialties. Also to provide an important contact with Western colleagues.		

2. MEDIUM TERM OPPORTUNITIES

Description		Cost	Pay-Off
Action:	Reduce excess O_2 on refinery heaters by replacing existing unreliable O_2 analyzers (five heaters). Present O_2 analyzers (Taylor "Servomex") are highly unreliable and therefore not used. The sampling system is unable to cope with the hot flue gas. Analyzers should be replaced with "in-situ-" probe type analyzers where the measuring element mounts in the firebox and a sampling system is not needed.	For five heaters: analyzer 23 000 installation 17 500 five sets of spare parts.22 500 total US$ 63 000	US $240000/yr[1] 7.2×10^6 Kcs/yr 30 Kcs = 1 US$ 240000 US$/yr [1]This value reflects a saving of 2.4% of the energy consumed in the five fired heaters of Table B.1.3. by reducing excess air to approximately the 10% level.
Benefit:	Reduce excess air in furnace flue gas thereby reducing refinery fuel usage.		
Supplier:	Zirtek Model ZTSC (cost: US $4 600) min. temp. - 1 200 °F (635 °C) design working temp. - 1 400 °F (746 °C) max. temp. - 2 900 °F (1 579 °C)		

2. MEDIUM TERM OPPORTUNITIES

Description		Cost	Pay-Off
Action:	Acquire and install a dryer in the reformer recycle gas stream.	To be determined	To be determined
Benefit:	Reduction in start-up time of the reformer, which is estimated by the refinery to save 570 000 Kcs/yr (US$ 19 000/yr)		
Supplier:	Competitive bid		

2. MEDIUM TERM OPPORTUNITIES

Description	Cost	Pay-Off
Action: Sponsor a study to evaluate process engineering simulation programs, including heat exchanger network pinch analysis.		Immediate
Benefit: Provide ability to simulate and/or calculate complex refinery chemical engineering operations. To simulate crude and vacuum columns with different crude oils; to simulate and optimize operating conditions, to use high speed computer calculations of unit operations to quickly understand and solve operating problems.	Study Cost - $110 000	
Supplier of Simulation: "Hysim" - Hyprotech, Chem Share, Aspen, Sim-Sci or equivalent.		
Supplier of Study: Engineering design firm of appropriate background.		

120

2. MEDIUM TERM OPPORTUNITIES

Description	Cost	Pay-Off
Action: Sponsor a study to evaluate the acquisition of a suitable refinery linear program (LP) software such as "PIMS" to enable the reliable modelling of the refinery and eventually the total complex. The need also exists for concomitant studies to establish future crude slate and product scenarios. Benefit: When complete (allow 6 months) the model will permit a systematic approach to optimizing operations with regard to feedstock / processing costs and product marketing reaiities. As experience is gained, the model can be utilized to study and identify: 1. Areas of existing deficiencies 2. Means of maximizing product profitability 3. Analyzing optimum modernization possibilities Supplier of LP model: By competitive bidding and evaluation. Firms such as Bechtel, Bonner & Moore, Haverly and Profimatics offer suitable refinery models. Supplier of study: Firm of appropriate background.	(1) Study Cost: Approximately $110 000 (2) Estimated LP model cost: Software; $50 000 Staff; 2 more years for $100 000 A more accurate determination of cost benefit will result from the study, but at 3 300 000 tonnes/yr crude throughput at $140/tonne =462 million $/yr $462 000 represents 0.01% of crude cost.	Experience indicates average improvements of 10% in operational profitability can be achieved using LP techniques.

1. MEDIUM TERM OPPORTUNITIES

Description		Cost	Pay-Off
Action:	Purchase and install integrated software package to organize maintenance, inventory, procurement and allow planning and scheduling, cost tracking and a historical maintenance record.	Estimated at $225 000	Indeterminant
Benefit:	Allows system approach and collection of data base to initiate preventive maintenance program and extend the turnaround cycle. Effective use of CPM scheduling can result in shorter turn-around times. Which means higher yearly throughput and improved profitability. Proper historical data collection by equipment or system will yield cost / downtime / maintenance trends that can be used for maintenance scheduling, proper equipment replacement decisions and justifications. The control of inventory, coupled with historical data can yield cost savings through optimization of spare parts storage and acquisition.		
Supplier:	Bonner & Moore Consulting Services or equivalent		

2. MEDIUM TERM OPPORTUNITIES

	Description	Cost	Pay-Off
Action:	Provide a review of and training in capital budgeting practices.	$25 000 Estimated	Improved return on invested capital.
Benefit:	Allocation of capital funds in a business must be based on maximizing financial return. A portion of available funds are needed for maintenance, environmental and safety purposes. However discretionary capital should be allocated on a sound technical/economic basis. Refinery management needs the tools and understanding to recognize and support projects that minimize costs (in many cases energy savings) and thus maximize profits. Yield improvements, labor reduction, new products, new business lines, etc., also fall into this category.	Follow-up, $15 000	
Supplier:	This activity is strongly recommended for future aid funding. The training should encompass all levels / functions within the refinery.		

2. MEDIUM TERM OPPORTUNITIES

Description		Cost	Pay-Off
Action:	Installation of hot separator into the heat exchange line on the reactor effluent at gas oil, kerosene and naphtha hydrotreating units.	To be determined. However, at a 3 year payout, an expenditure of $400 000 would be appropriate.	To be evaluated.
Benefit:	Heat savings, reduced pressure drop and reduced liquid flow velocity in overloaded units. The refinery estimates a savings of $133 000/yr per unit.		
Supplier:	Competitive Bid		

2. MEDIUM TERM OPPORTUNITIES

Description		Cost	Pay-Off
Action:	Contract design / construction firm to replace existing shell and tube exchangers with a single vertical shell & tube or welded plate type exchanger on the reformer feed / effluent.	To be determined	To be determined
Benefit:	Allows improved efficiency and increased capacity.		
Supplier:	Competitive Bid		

3. LONG TERM OPPORTUNITIES

Description		Cost	Pay-Off
Action:	Addition of flue gas/combustion air preheat, Step 1: Crude oil furnaces, Naphtha HDS furnaces.	Estimated cost 18 million Kcs ($600 000)	$\frac{\$600\ 000}{\$326\ 700/yr} = 1.8$yrs
Benefit:	Increased efficiency of furnaces, resulting in fuel gas savings. Cost and saving's data from refinery estimate.	Estimated net savings 9.8 x10^6 Kcs/yr ($326 700/yr)	
Supplier:	Competitive Bid		

3. LONG TERM OPPORTUNITIES

Description		Cost	Pay-Off
Action:	Addition of flue gas/combustion air preheat, Step 2: Reformer furnace, kerosene and gas oil HDS furnaces.	[1]9 600 000 Kcs 271 000 $ Total $591 000	$591 000 = 2.2yrs $266 700
Benefit:	Increased efficiency of furnaces, resulting in fuel gas savings. Cost and saving's data by refinery estimate. A savings of 8 million Kcs/yr is estimated ($266 700/yr).	[1]9 600 0000 Kcs = $320 000. The project requires 9 600 000 Kcs plus $271 000 as hard currency or a total $591 000 estimate.	
Supplier:	Competitive Bid		

121

2. MEDIUM TERM OPPORTUNITIES

Description		Cost	Pay-Off
Action:	Add an octane analyzer to the reformer	Estimated cost from written budget quote is $144 600. Training and start-up expense at two weeks, including travel is estimated at $15 000. Total cost $160 000.	$159 600 / $63 000/yr = 2.5yrs
Benefit:	Tighter control of reformer octane number should yield a savings of approximately $63 000/yr. See Section 6.4.7 for savings calculation basis.		
Supplier:	UOP Monirex Systems 25 East Algonquin Road Des Plaines, IL 60017 Attn: Scott Gunderson		

128

2. MEDIUM TERM OPPORTUNITIES

Description		Cost	Pay-Off
Action:	Acquire and install a catalyst sampler for the refinery unit.	Sampler $39 500 Training, travel start-up, freight, etc. estimated at $15 000 Total $54 500	Not justified at this time. Needs further evaluation.
Benefit:	Allows for on-line analysis during operations for chloride, coke, catalyst surface area and / or other qualities to evaluate operations. This results in longer on-stream time and improved yields. Refinery estimates utility savings during regeneration to be $5 000/yr.		
Supplier:	UOP Monirex Systems 25 East Algonquin Road Des Plaines, IL 60017 Attn: Scott Gunderson		

K. ENVIRONMENTAL EMISSIONS REDUCTIONS

1. IMMEDIATE OPPORTUNITIES

There were no observed immediate opportunities to reduce the environmental pollution.

2. MEDIUM TERM OPPORTUNITIES

One medium-term opportunity for pollution reduction is the reinstallation of the flocculation equipment at the WWTP. This could reduce the oil and suspended solids emitted. This is not recommended at the present time because the plant effluent is significantly below the current standards. If the standards are tightened, the flocculation equipment could be reinstalled.

A second medium-term reduction could be the installation of low NOx gas burners at the process heaters. This is recommended after the power plant air pollution control system is resolved and the design and installation initiated.

3. LONG TERM OPPORTUNITIES

Long term, the addition of a tail gas plant to the sulfur unit is needed to further reduce SOx emissions.

4. FURTHER WORK REQUIRED

Further work is required to aid in the resolution of the power plant emission control. This could be in the form of help in the economic study of fuel options vs. flue gas clean-up.

K. **ENVIRONMENTAL EMISSIONS REDUCTIONS**

2. MEDIUM TERM OPPORTUNITIES

Description		Cost	Pay-Off
Action:	Reactivate flocculation unit, estimated costs:		Environmental benefit; reduction of oil/solids discharge with water effluent.
	Chemfeed $3 000 Gear box 5 000 Paddle 2 000 Piping 2 000	$12 000	
	$12 000	US $15 600	
	Chemicals 3 600	3 600	
Benefits:	Flocculation will reduce the oil / suspended solids discharged to the receiving station. If flocculation is re-activated consideration should be given to recycle some of the effluent.		
Supplier:	By refinery staff.		

2. MEDIUM TERM OPPORTUNITIES

	Description	Cost	Pay-Off
Action:	Replace existing standard natural gas heater burners with low NOx style burners. 9 heaters @ 8 burners per heater at $2 000 / burner. Accumulated capital cost @ 7% - 10 yr Annual cost $20 500 O & M ____ Total Annual $20 500 $\frac{20\ 500}{yr} \times \frac{yr}{7\ 000 \text{ tonnes NOx}}$ = $2 929 / tonne NOx In the US, the figure of $1 000 - 2 000 / tonne removed would justify require installation. Therefore it is marginal to recommend that low NOx units be installed.	$144 000	Environmental improvement
Benefit:	This would reduce the NOx emission rate by 20 - 30%. Actual tonnes of NOx to be eliminated is dependant upon the hours of operation. Approximately 7000 tonnes/yr NOx would be removed.		
Supplier:	By competitive bid.		

132

2. MEDIUM TERM OPPORTUNITIES

Description		Cost	Pay-Off
Action:	Installation of a natural gas start-up burner at the sulfur plant.	To be determined	Environmental improvements.
Benefit:	Estimated reduction of SO_2 emissions of 150 tonnes/yr (by refinery estimate).		
Supplier:	By competitive bid.		

2. MEDIUM TERM OPPORTUNITIES

Description		Cost	Pay-Off
Action:	Study the feasibility of installing secondary sealing of floating crude oil and gasoline roof tanks.	$9 000/tank	Primary environmental, with some return due to decreased evaporation loss.
Benefit:	The refinery staff estimates a savings of 100 tonnes/yr of refinery products, which is equivalent to $15 000/yr.		
Supplier:	CBI - Contact Kit Weirremeyer Kankakee, Illinois USA (315) 933-4440		

3. LONG TERM OPPORTUNITIES

Description		Cost	Pay-off
Action:	Study of Sulfur Plant SOx emissions Long term, Kaucuk needs tail gas treatment units on the existing sulfur plants for improving the efficiency from 94% to 99% for environmental reasons.	To be determined	Environmental improvements.
Benefit:	Improve Efficiency to 99%.		
Supplier:	Engineering firm of appropriate background.		

3. LONG TERM OPPORTUNITIES

Description		Cost	Pay-off
Action:	Reformulation of gasoline A study is needed to address the coming elimination of lead content and the reduction of aromatic levels in gasoline. Improving octane value through MTBE, alkylation and/or a CCR reformer needs to be evaluated.	$250 000 to 300 000	Environmental improvement
Benefit:	The proper economic choice of replacing lead and aromatics is necessary to meet environmental goals.		
Supplier:	Engineering design firm of appropriate background.		

EXTRACT FROM CHARACTERIZATION REPORT

3. KAUCUK REFINERY WORKS - KRALUPY, CSFR

3.1 Summary Description of Refinery

Kaucuk Kralupy is a refining and petrochemical complex. In addition to the refinery, there are petrochemical production facilities (butadiene, styrene, SBR, polystyrene, ABS and MTBE) based on raw materials received from Litvinov via pipelines. Only the refinery is reviewed in this characterization report.

The refinery is located within a complex adjacent to the Vltava River, not far from Kralupy, a city of about 20 000 people, located about 25 km north of Prague. The address of the refinery is:

Kaucuk S.P.
278-52 Kralupy NAD.VLT
CSFR

Telephone: (0205) 23663
Telefax: (0205) 23566
Telex: 132 343

Contact: Ing. Jiri Tlusty

The Kaucuk Refinery was built as a hydroskimming refinery between 1969 and 1974, when sufficient amounts of crude oil from the USSR were available. The rated capacity of the refinery is 3.2 million tonnes/y. Figure 5 shows the processing units in the refinery.

A fully integrated distillation unit (atmospheric only) supplies the downstream units with feed materials without cooling and day storage. In an emergency, it is possible to cool and store some products. The distillation unit also includes a crude oil desalting stage and a naphtha rerun column. The history of various units is indicated in Table C.3.1.1 and typical yield patterns are shown in Table C.3.1.2. The overall material balance for 1990 is shown in Table C.3.1.3.

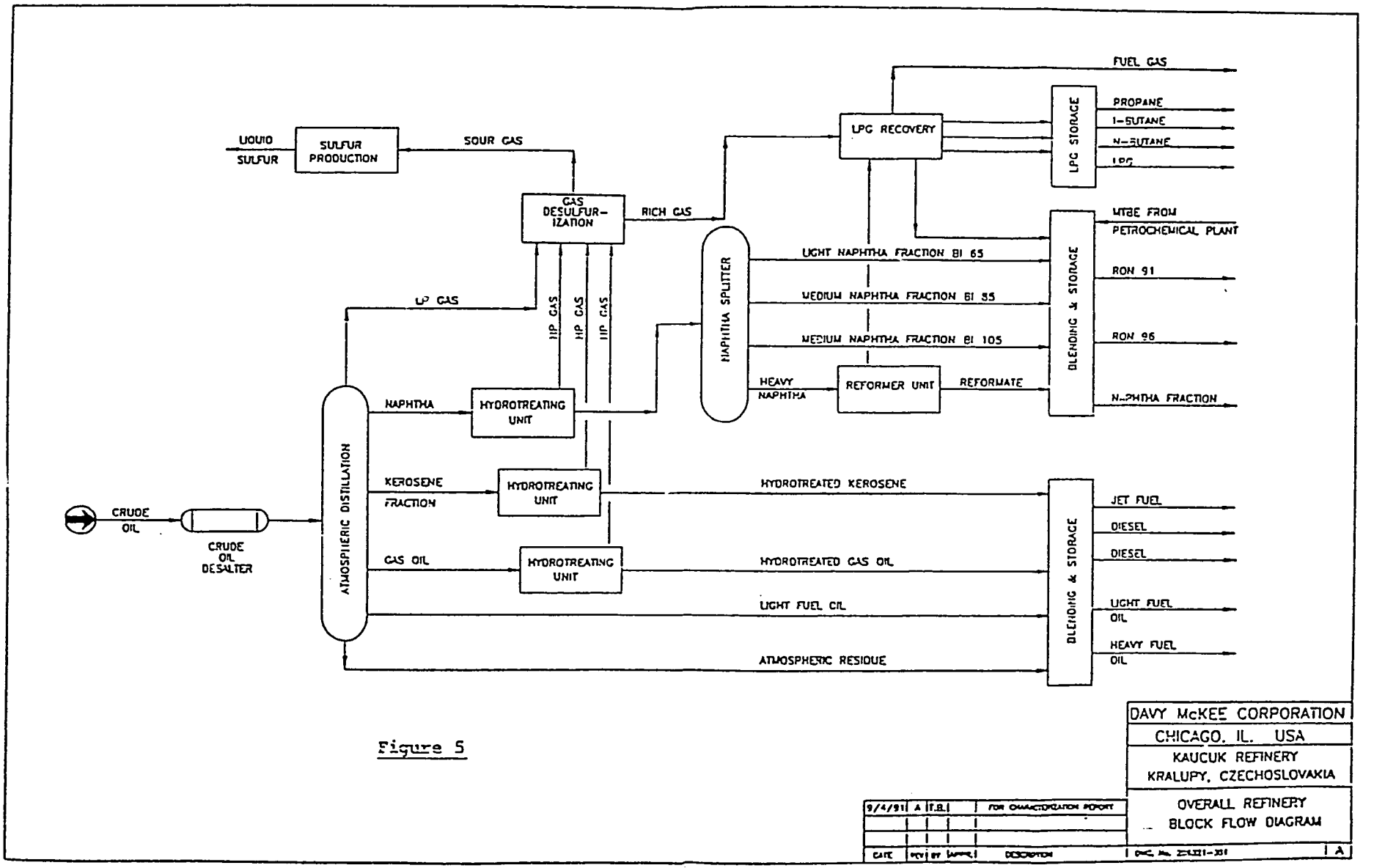

Figure 5

DAVY McKEE CORPORATION
CHICAGO, IL. USA
KAUCUK REFINERY
KRALUPY, CZECHOSLOVAKIA
OVERALL REFINERY BLOCK FLOW DIAGRAM

DATE	REV	BY	APPR.	DESCRIPTION	DWG. No.	
9/4/91	A	T.B.		FOR CHARACTERIZATION REPORT		A

Table C.3.1.1 - PROCESSING UNITS

Unit	Capacity tonnes/year	Startup
Crude Oil Distillation	3 270 000	1974
Naphtha HDS Unit	624 000	1975
Kerosene HDS Unit	344 000	1975
Gas Oil HDS Unit	830 000	1975
Cat. Reformer Unit	330 000	1975
LPG Unit	122 000	1975
Claus Unit	8 000	1975

Table C.3.1.2 - REFINERY PRODUCT YIELDS

Product	Yield in wt%
Naphtha	17.8
Kerosene	9.0
Gas oil	23.5
Light fuel oil	6.0
Heavy fuel oil	43.5
Gas	0.2
Total	100.0

Table C.3.1.3 - OVERALL MATERIAL BALANCE 1990

Inputs	tonnes/year
Crude Oil	2 456 500
MTBE	25 800
C_4 Fraction (1)	22 000
Total Feeds	2 504 300

Outputs	tonnes/year
Gasoline BA91C	261 300
Gasoline BA95C	102 470
Naphtha	46 800
Diesel NM4	344 600
Diesel NM22	275 100
Diesel NM30	-
Gas Oil Hydrotreated	20 600
Jet Fuel	123 000
Light Fuel Oil	155 600
Heavy Fuel Oil	1 034 200
LPG	79 500
Sulfur	4 800
Fuel Gas	17 800
Fuel Oil	23 504
Losses	15 026
Total Products	2 504 300

(1) C_4 fraction after the MTBE production

Light ends processing

Sour gases from the refinery are collected and desulfurized using DEA.

Sweet gases are mixed with the LPG stream from the reformer unit and sent to the gas separation plant. Compressed gases are washed using hexane as a solvent. Lighter components, including ethane, are separated in a gaseous form and sent to the refinery fuel gas system. Propane, butane, and pentane are selectively desorbed and solvent is recycled. If necessary, normal and iso-butane can be separated. Individual components are partly remixed for a commercial specification or sold directly.

Table C.3.1.3 shows typical yields of light products in the overall yearly balance. Table C.3.1.4 shows the typical stream composition of C_1 through C_3.

Table C.3.1.4 - STREAM COMPOSITIONS

Component % Vol	Fuel Gas	C_3	C_4	C_5	i-C_4	n-C_4	Solvent
H_2	30.0	-	-	-	-	-	-
C_1	26.7	-	-	-	-	-	traces
C_2	36.6	-	-	-	-	-	0.1
C_3	0.6	47.2	-	-	traces	-	traces
i-C_4	-	20.9	10.7	traces	99.3	6.4	-
n-C_4	0.1	37.9	87.6	0.8	0.7	92.2	0.2
i-C_5	3.0	traces	1.6	33.3	traces	1.3	11.9
n-C_5	2.2	-	0.1	23.8	-	0.1	10.3
C_6+	0.8	-	-	42.1	-	-	77.5

Residual processing units

Currently, there are no atmospheric residue processing units in the refinery. When the refinery was constructed, it was assumed there would be a continuous, large supply of crude oil from the USSR. Therefore, bottoms processing was not necessary. Now the supply of crude oil from the USSR is limited, and atmospheric bottoms processing is necessary. Several bottoms processing schemes are being evaluated.

141

Light and heavy naphtha processing

Raw naphtha from the distillation column is hydrodesulfurized, stabilized and rerun into individual cuts. In addition to the naphtha feed, 3 - 4 tonnes/h of C_4 is introduced (C_4 fraction after the butadiene extraction and MTBE production) to be saturated. A major portion from the bottom of the rerun column is heavy naphtha. It is fed to the catalytic reformer unit for upgrading to increase the octane. Liquid product from the reformer unit is the high octane number component of a gasoline pool. The overhead fraction from the naphtha rerun column (naphtha 65) is used as a light component in the gasoline pool, medium fraction (naphtha 85) is partly used for gasoline production and partly sold as a feed for steam cracking. MTBE is also a part of the gasoline pool. Isomerization of light naphtha is being evaluated. The amount and quality of gasoline produced is indicated in Tables C.3.1.3. and Table C.3.10.2. Naphtha quality is listed in Table C.3.10.3.

Distillate processing

Kerosene and gas oil are hydrotreated to remove sulfur. Medium pressure hydrodesulfurization is used. Kerosene is used for jet fuel production and the rest is sent to the diesel pool. The major portion of hydrotreated gas oil is used for diesel production; a smaller part is sold directly. The quantity and quality of jet and diesel fuel are presented in Tables C.3.1.3 and 3.10.8.

Gas oil conversion

The Kaucuk Refinery does not have a vacuum distillation unit.

Hydrogen production

No special hydrogen production exists in the refinery. The major part of the hydrogen for the HDS units is produced as a by-product in the catalytic reformer unit. There is high pressure hydrogen storage for the startup of the reformer unit. A small amount of hydrogen from styrene production (dehydrogenation of ethylbenzene) may be purified and used within the refinery.

Sulfur recovery

The average sulfur content of Russian crude is 1.5 - 1.6 wt%. The majority of the sulfur is concentrated in heavy fuel oil and sold with the product. The white products are hydrodesulfurized and this sulfur, in the form of H_2S, is converted to elemental sulfur in the Claus unit in the refinery. The 1990 production of sulfur was 4 800 tonnes as shown in Table C.3.1.2. This represents only about 12.6% of the sulfur introduced with the crude oil.

Refinery process control

The refinery is computer controlled from a single control room.

3.2 Utilities, Services, Offsites

Electricity generation and distribution

A power station inside the Kaucuk complex supplies electricity for the refinery. In the main station there are four 125 tonnes/h coal fired boilers producing 9.6 MPa steam, superheated to 540 °C. Two generators of 30 MW each produce electricity for the whole complex; even though one generator can support the facility. The system is connected to the national grid.

Power from the generators is 6 kV and this voltage is used for plant distribution. Electrical power distribution in the refinery units is as follows:

6 000 volts	Incoming distribution voltage is used to power refinery motors of 160 kW and up.
380 volts	Powers motors below 160 kW and supplies power to the desalter.
220 volts	Normal refinery lighting.
24 volts	Safety lighting.

Steam generation and distribution/condensate collection

Process steam for the whole complex is supplied from:

- The power station: 4 boilers @ 125 tonnes/h - coal fired
- Two small boilers: @ 25 tonnes/h each 1.6 MPa 230 °C - gas or oil fired
- Local process waste heat boilers

Steam is produced from waste heat in the following locations:

• Reformer heater	1.6 MPa	240 °C	7.50 tonnes/h
• Reformer heater	0.6 MPa	190 °C	4.28 tonnes/h
• Gas oil and Kero HDS	0.6 MPa	190 °C	9.00 tonnes/h
• Claus Unit	0.6 MPa	190 °C	1.00 tonnes/h

In the power station, steam is extracted from turbines at 1 MPa and 0.25 MPa and sent to the process steam system. Primary condensate is returned to the primary cycle.

Part of the condensate collected is used in a crude oil desalting unit in combination with the fresh softened water from the power station as boiler feed water for the wasteheat steam production mentioned above.

Fuel supply, nature and sourcing

Steam and power production in the main power station is based on coal firing. All refinery furnaces are now gas fired (combined oil/gas burners). Fuel gas is a mixture of refinery gas (40%) and natural gas (60%) from the pipeline connected to the national grid. The heating value of this mixture is 54 GJ/tonne. The composition of individual components is shown in Table C.3.2.1 below.

Table C.3.2.1 - COMPOSITION OF FUEL GASES

Component	Refinery Gas (vol%)	Natural Gas (vol%)
H_2S	0.01	15 ppm
CO_2	-	0.25
N_2	-	0.85
H_2	70.00	-
C_1	14.39	97.66
C_2	13.50	0.90
C_3	1.10	0.30
C_4	-	-
i-C_4	0.40	-
n-C_4	0.40	-
C_5	0.20	0.02
C_6	-	0.02

Cooling towers

The refinery has its own cooling water system. There is a separate cooling tower with a natural air draft and a 3 000 cubic meters/h capacity. The average temperature difference is 6 to 8 °C. There are no special problems with corrosion or fouling of coolers. During the summer, the water from the cooling tower is too warm for the condensers in the gas separation plant, and on warm days some raw water is mixed with cooling water to achieve the desired temperature.

Fresh water supply

Fresh water is supplied from the Vltava River. The refinery has a recycled cooling water system, and water from the river is used as makeup water to replace evaporation losses and blowdown. Fresh water for the refinery is supplied from the central pumping station because the rest of the complex uses a once-through cooling water system.

Water treatment and distribution

Only makeup water for the recycle cooling system of the refinery is filtered. The fire water is stored in one of the stages of the biological wastewater treatment unit. It is connected to pumps and the fire water distribution system.

Crude oil supply

Crude oil is supplied by the pipeline. Within the refinery, there are 6 crude storage tanks (31 000 cubic meters each). Mixers in each tank prevent basic sediment and water (BS&W) from settling. Low pressure pumps feed the distillation unit. There is a tank farm sufficient for storage of semi and final products, including LPG.

Product blending and shipment

Two electronic in-line blenders made by Jiskoot (Great Britain) are controlled from a local board along with an Enraf Nonius meter and Minelect tank gauging system. The first blender is used for combining 5 streams to obtain product gasoline. The second blender mixes 2 streams for diesel.

Products are shipped via:

- Product pipeline 175 cubic meters/hour
- Railway tanks 400 cubic meters/hour
- Tank cars 100 cubic meters/hour

There is an automatic, computer-controlled, filling station for railway tank cars.

Flare, blowdown, dropout system

The refinery has its own flare system with a separator drum. Liquid hydrocarbons are separated and returned to the process. There is a standard elevated flare system with no return of hydrocarbon vapors.

3.3 Chemicals and Catalyst

Catalysts are used in the refinery in hydrodesulfurization units, catalytic reformers and the Claus unit. Catalyst usage is noted in Table C.3.3.1.

Table C.3.3.1 - CATALYST USAGE

Service	Catalyst (Supplier)
Naphtha Hydrotreater	KF 124 (Akzo Ketjen)
Reformer unit	CK522 (Akzo)
Kerosene Hydrotreater	S444T (Shell)
Gas oil Hydrotreater	S444T (Shell)
Claus unit	S201 alumina (Kaiser Chemicals) CR catalyst (Rhone Poulenc)

3.4 Previous 12-Month History

The overall material balance for 1990 is shown in Table C.3.1.3. The reduction of crude oil supplied from the USSR and the economic changes in CSFR had the greatest impact on the 1990 data. This, and the fact that Kaucuk is a hydroskimming refinery and produces heavy fuel oil, make Chemopetrol and Slovnaft preferred sites for the now limited crude supply. Both of these refineries have hydrocracking units and can convert the available crude oil into more valuable products.

3.4.1 Recent Modifications

When the catalytic reformer was modified it resulted in increased capacity, improved heat exchange and lower furnace duty. An old IBM 1800 computer was replaced by a distributed control system (DCS) to improve the process control. Other energy saving projects are under consideration.

3.4.2 Crude Oil Supply

Practically all crude oil processed in the Kaucuk Refinery is from the USSR. Small amounts of Middle East crude have been added and mixed with the Russian crude. Detailed properties of the Russian crude oil are in Section D.

Sources and supply network

Until recently, only Russian crude oil was available. During the last year, the crude oil supply was reduced and other resources are being evaluated, including alternative resources for crude and new transport possibilities.

In addition to the crude pipeline from the USSR, the ADRIA pipeline from the Adriatic Sea (Omisaj) via Yugoslavia, Hungary and southern Slovakia connects with the Russian pipeline. CSFR participated financially in the construction of this pipeline, and the original agreement enabled CSFR to use 5 million tonnes/y capacity. This agreement has not been in effect for a long time and has expired.

The Hungarians have similar concerns about supply problems with Russian crude for their refineries. It may be possible to transport about 5 million tonnes/y of crude via the ADRIA pipeline to CSFR.

Other alternatives include:

- The extension of the pipeline from the Schwechat Refinery to Slovnaft (about 60 km). The bottleneck of this solution is the relatively low spare capacity in this pipeline (max. 4.0 million tonnes/y).

- Ingolstadt - Kralupy pipeline connecting TAL pipeline to Litvinov or Kralupy. The distance is longer (about 350 km from Kralupy), but it may be a possible solution.

3.4.3 Operating Experiences

The refinery was designed for Russian crude, and since the startup, only Russian crude has been processed. The refinery was designed and built in one integrated, compact block of units without day tanks and only final products are cooled down and stored.

Off-site units and utility supplies are very reliable and contribute to the fact that unexpected shutdowns are infrequent and turn-around cycles are extended beyond what is typical for CSFR.

Irregular crude supply was the major problem experienced in the last year.

3.4.4 Impact of Changing Crudes

The refinery has no practical experience with processing different crudes, however small amounts of different crudes have been added and diluted in the Russian oil. Over the last few months the sulfur content of the Russian crude (1.8-1.9 wt%) has increased. This higher sulfur content has increased the sulfur in distillates and residual products. The major problem with the fuel oil quality, especially with the heavy fuel oil that has more than 3 wt% sulfur, is that it exceeds specifications. The refinery is very vulnerable because it has no vacuum distillation or residue processing capabilities.

Due to the lack of experience with other crudes, suitable simulation software could be used to help predict process conditions and identify equipment bottlenecks caused by the new feedstock. Although some potential crudes have been selected and analyzed using refinery simulation software, additional sophisticated simulation software is required to study frequent changes in the crude supply.

Since there is no direct experience with processing different crude oil, it may be possible to set some limits within the mixed or alternative crude that will obviate negative consequences for the refinery, but these limits are not yet proven or defined.

3.4.5 Impact of Product Market Changes

Refinery production is preferably oriented to the domestic market. In the past, some excess products have been exported. Recently, due to crude oil reductions, some products (gasoline, for example) have been imported. In the near future, it is reasonable to expect stronger competition, even in the domestic market, for at least some products. This means that the refinery should take precautions in order to achieve a profit at competitive prices. The Kaucuk Refinery has the advantage of integrated, economical production and its proximity to a major market (Prague). This advantage will be more valuable after down-stream units for atmospheric residue processing are completed.

3.4.6 Impact of Legislation and Social Changes

The subject of legislation and social changes toward a market oriented economy is expected to profoundly change the mode of operation for the refinery. The most important step, the privatization of the company, is under evaluation.

The economic impact of free market conditions will result in more careful processing and quality improvements. Environmental restrictions (lead and benzene content in gasoline, SOx, NOx emissions, wastewater quality, etc.) may require additional refinery equipment modifications. Similarly, crude oil changes and crude oil pricing may also require equipment modifications. The most crucial problem facing the refinery is to find an economical way to process atmospheric residue.

Each of the above factors affect the refinery and have to be evaluated soon.

3.5 Environmental Considerations

3.5.1 Quality of Local Environment

Environmental restrictions (lead and benzene in gasoline, SOx and NOx emissions and wastewater quality) may require modifications to refinery equipment to amplify the present product slate.

The liquid wastes from the refinery appear to meet the current regulations and standards. During 1990, treated wastewater was continuously sent to the Vltava River. There are no apparent groundwater problems. Currently, the refinery is meeting the local air pollution control regulations. As the national policy for use of high sulfur coal and the release of NOx is established, the refinery will have to upgrade its control systems.

Solid wastes include ashes from the rotary kiln incinerator and the brown coal fired boilers. These ashes are combined and deposited at an approved offsite landfill.

3.5.2 Current Emissions Control

The refinery has a typical wastewater treatment plant, including separators, flocculation chemical feed system, and biological treatment. The oil losses at the API separator are well controlled. The treated water discharged to the river meets the current regulatory levels in terms of BOD, COD, chlorides, sulfates, oil (extract) and suspended solids.

The power plant boilers are burning brown coal, with over 1 wt% sulfur and high ash content. The flue gas passes through the electrostatic precipitators (ESP). There is no SOx or NOx control. The boilers emit 18000 tonnes of SO_2/year. The Claus sulfur plant has an efficiency of about 95%, and about 640 tonnes/year sulfur is emitted with the tail gas.

The solid wastes from the various water treatment plants consist of API sludge, water softener and waste activated sludge. These solids along with the storage tank bottom sludge, are incinerated in a rotary kiln. Other solid wastes, such as scrap plastics, fibers, papers, etc., are also incinerated. The bottom ash from the incinerators is combined with the ash from the boilers and transported to a landfill lined with impervious material.

3.6 Refinery Specific Potential and Opportunities for Improvement

<u>Computer software and hardware</u>

Kaucuk has personal computers (PC's) capable of running simulation programs. The computers can also run LP model software.

Kaucuk could also use a PC based maintenance planning and spare parts inventory program.

<u>Efficiency of furnaces</u>

The crude and reformer heaters are operating below 80% combustion efficiency. Installation of air preheaters and automatic control of combustion air should improve the efficiency to 90+%.

<u>Reformer feed/effluent exchanger</u>

Replacing existing shell and tube exchangers with a single vertical shell and tube exchanger will improve the efficiency and capacity of the reformer unit.

In-line gasoline blending

An octane analysis and control system to optimize octane blending calculations is recommended. The system could achieve continuous blending within 0.1 octane.

Secondary sealing of tanks

Secondary sealing of floating roof type tanks will save products lost to the atmosphere and reduce hydrocarbon emissions.

Steam condensate return to the boiler

Currently, only part of the steam condensate from the process units is returned to the boiler. A proper steam trap selection and maintenance program along with a condensate return and polishing system will improve the efficiency of the steam system.

Bottoms processing

Kaucuk does not have any bottoms processing, i.e., atmospheric residue is not processed. On the other hand, residue is sold as fuel oil (with about 2.5 wt% sulfur).

To integrate this refinery, it is recommended that one of the following options be considered:

1) Add a vacuum unit and hydroprocess the vacuum gas oils before charging into an FCC unit. Increase the capacities of the naphtha hydrotreater and reformer. Consider a CCR. Also, increase the capacity of the diesel hydrotreater. Bottoms from the vacuum unit could either be converted into bitumen, or partially oxidized for producing hydrogen or methanol.

2) The bottoms from the crude unit could be hydrodesulfurized directly and demetalized before being charged into an FCC/RCC unit. This option does not require a vacuum unit. However, other units, mentioned in option (1), will have to be revamped or added.

3) Add a vacuum unit and a hydrocracker. Increase the capacities of the reformer and hydrotreaters. Add a hydrogen plant based on natural gas or vacuum bottoms, or convert vacuum bottoms to bitumen.

4) Add thermal cracking to either option 1) or 3) above.

5) The bottoms from the vacuum unit could also be fired in the boilers or furnaces. However, this will require flue gas desulfurization.

Reformulation of gasoline

Currently, the gasolines produced contain less than 0.15 g TEL/liter. Eventually, the lead will be phased out and the benzene content will be reduced. In order to accomplish this, Kaucuk will need a high octane reformer and maybe a combination of isomerization and alkylation units to support the MTBE unit.

Environmental impact reduction

To control air pollution due to SOx, NOx and fly ash, Kaucuk will need:

1) Tail gas treatment units for the Claus sulfur recovery plant
2) Filters (better than ESP) for fly ash control
3) Flue gas desulfurization units
4) Better burners for NOx control

New pipeline

A major crude oil supply development was a decision to link the Chempetrol and Kaucuk refineries with Ingolstadt in Germany and the TAL oil pipeline.

3.7 Refinery Specific Problems and Trends

A major problem is the need for the refinery to adapt to competitive markets and changing social and economic conditions. Specific problems and concerns involved in adapting to these changing conditions are constantly being sought. Many of these problems and possible solutions are discussed in Section 3.6. Further detailed feasibility evaluations are needed. Priorities will have to be established based on a consideration of the financial possibilities.

3.8 Methodology of Data Collection

A questionnaire, completed by refinery personnel, furnished the basis for most of the data in this report. The rest was obtained by the Davy McKee team during a site visit to the refinery.

3.9 Evaluation of Results Achieved by / for Data Base

Data from the questionnaire and the site visit to the refinery are the subject of a separate report and have been applied to the formation of a computerized data base.

3.10 Supporting Plant Data

Product specifications and properties are indicated in the following tables:

C.3.10.1 LPG (LIQUEFIED PETROLEUM GASES)
C.3.10.2 GASOLINES
C.3.10.3 NAPHTHA FOR STEAM CRACKING
C.3.10.4 JET FUELS
C.3.10.5 DIESEL FUELS
C.3.10.6 FUEL OILS

Table C.3.10.1 - LPG (LIQUEFIED PETROLEUM GASES)

Component	Propane-Butane Mixture		n-Butane	i-Butane
	Summer	Winter		
C_2 + inerts % volume	7	7	5	-
C_3 min. % volume	30	55	max. 6	-
C_4 % volume	30 - 60	15 - 42	min. 90	-
i-C_4 % volume	-	-	-	min. 96
C_5 max. % volume	3	2	5	(C_3+C_5) max. at 4
H_2S max. ppm	0.2	0.2	0.2	-
Total sulfur max. ppm	200	200	200	2
Olefin content % volume	-	-	-	max. 0.05

Table C.3.10.2 - GASOLINES

GRADE		91C	95C
Density at 20 °C kg/cubic meters		710 - 750	710 - 750
Octane No Research		91	96
Octane No Motor		82	85
Lead Content max. g Pb/c		0.15	0.15
Distillation:			
10% at °C max.	summer	65	65
	winter	60	-
50% at °C	summer	95 - 115	80 - 115
	winter	75 - 110	75 - 110
90% at °C (max.)		180	180
EP °C (max.)		215	215
Distill. resid (max.) % vol.		2	2
RVP kPa	summer	40 - 70	40 - 80
	winter	50 - 90	-
Sulfur content (max.) %wt		0.05	0.05
Benzene content (max.) %wt		5	-
MTBE content (max.) %wt		10	10

154

Table C.3.10.3 - NAPHTHA FOR STEAM CRACKING

Density at 15 °C kg/cubic meters	650 - 710
Lead content max. ppb	50
Distillation	
IBP min. °C	35
50% vol. max. °C	85
EP max. °C	130
Sulfur content max. ppm	400
Aromatics content max. %wt	7
Olefin content max. %wt	1

Table C.3.10.4 - JET FUELS

Property	Value
Density at 20 °C kg/cubic meters (min.)	775
Distillation:	
IBP min. °C	135
10% max. °C	185
50% max. °C	220
90% max. °C	260
95% °C	-
98% max. °C	275
EP °C	-
Distill. residue % vol.	2.01
Viscosity at 20 °C mm^2/sec min	1.3
Viscosity at -40 °C mm^2/sec max	10.0
Pour Point °C	-60
Flash point P-M °C min.	38
Acid No. mg KOH/100 ml	0.4 - 0.7
Iodine No g/100 g	0.5
Aromatics content max. % wt.	20
Sulfur content max. % wt.	0.1
Sulfur mercaptans max. % wt.	0.001
Doctor Test	negative
Smoke Point min., mm	25
Calorific value kJ/kg	42 800

Table C.3.10.5 - DIESEL FUELS

Property	NM-4B	NM-22B	NM-30B
Density at 20 C kg/cubic meters	810 - 850	850 - 835	800 - 830
Cetane No min.	45	42	40
Distillation			
IBP °C	-	-	-
to 170 °C max. vol%	15	15	15
to 350 °C min. vol%	90	90	-
to 370 °C min. vol%	97	97	-
Viscosity at 20 °C mm^2/sec	2.5 - 6.0	2.5 - 6.0	2.3 - 5.0
Cloud point max. °C	-4	-22	-30
Flash point P-M °C	60	56	56
Sulfur max. % wt.	0.15	0.15	0.15
Acid No. mg KOH/g	0.1	0.1	0.1
Calorific value kJ/kg	42 500	-	-

Table C.3.10.6 - FUEL OILS

Property	Light	Heavy
Density at 20 °C kg/m^3	900	960
Viscosity at 40 °C mm^2/sec	max. 18	-
at 100 °C mm^2/sec	-	max. 57
Flash point min. °C	66	140
Pour Point °C summer	+10	+40
winter	-5	-
Sulfur content max. % wt.	2	3
Water content max. % wt.	0.5	1.0

APPENDIX B PROCESS SIMULATION BENEFITS

Process simulation

The general overall benefit of process simulation is that it is the most cost effective approach to process prediction and evaluation. Refiners can evaluate process changes without physically undertaking operational changes in the plant.

Process simulation can be done on virtually any process. However, the following are common examples.

Tower and flash drums

Distillation processes are probably the most frequently simulated operations. Commercial simulation programs such as Simulation Sciences-PROCESS/PRO-II, Chemshare, HYSIM, and Aspen all have elaborate built-in thermodynamic data bases and prediction procedures to yield accurate vapor and liquid separations and therefore, distillation results. Examples of common owner simulation are as follows:

Crude atmospheric and vacuum towers

These simulations can determine the expected yields from various crude blends. These crude change simulations can highlight areas of concern in downstream processing. Many times these simulations not only include pumparounds, but also side steam strippers so detailed product specifications and tower loadings can be accurately checked. With an anticipated crude blend and/or rate change, the refiner can determine:

- Product yields
- Pumparound duty requirements
- Flash zone temperatures
- Column section loadings
- Vacuum system requirements
- Stripping steam requirements (in the main column and side stream strippers)

Since these variables can affect each other, the simulation allows the refiner to recheck and reoptimize all variables simultaneously.

The tower simulation can also be used to evaluate possible cost effective efficiency improvements (even if crude rates and/or blends remain the same). For example, the economics of adding a preflash tower (the preflash tower vessel and main fractionator costs versus energy savings) can be evaluated. Another example is a vacuum tower transfer line redesign and its energy and yield benefits.

Fluid catalytic cracking unit columns

The FCCU main fractionator tower and Vapor Recovery Unit towers: Absorber-Stripper, Depropanizer, etc., are simulated for similar reasons as crude unit towers, but not as often. Pumparound duties are once again important variables in determining absorption & product yields and tower loadings.

Other product separation and stabilization

There are many other refinery columns that frequently can be simulated to determine tower capacity, separation effectiveness, energy improvements, control optimization, etc. These include:

- Lube Oil Vacuum Towers
- Coking Unit Combination Towers
- Naphtha Splitters
- Gasoline, or other product, Stabilizers
- Debutanizers
- Depropanizers
- Deethanizers
- Propane-Propylene Splitters

Many times these columns have stringent separation requirements necessitating high reflux ratios to achieve product specifications. Simulation models can assist in balancing these reflux ratios with condenser duties, reboiler duties, tray/packing loads, intermediate heat removals, and tower hydraulics.

Often, tower pressure drops can markedly affect K-valves. Thus, the tray-by-tray calculations of a tower simulation program not only achieve accurate separation results, but also can be used to predict tower delta P effects.

If these tower simulations show an area of concern (tower loading, product specification, etc.), the refiner can again use the tower simulation program to see:

1) if any adjustment in pumparound duties, tower conditions (pressure and temperature) stripping steam, and/or product yields and specifications can be used to solve the problem

2) how much reduction in capacity would be required to remove the problem(s).

3) the effect of a possible capital addition, such as more pumparound duties, bigger columns, deeper vacuums, and/or a change in tower internals.

Many times refiners see a range of possible tower feeds. The simulation model can be used to evaluate the extremes. Perhaps, the simulation results may highlight ways to improve day-to-day operations. For example, this approach may show the refiners the best tray (the tray with greatest temperature change) to control the tower heat balance (i.e., reboiler duty).

Heat exchange network

Heat exchange network units are prime candidates for frequent simulations to evaluate:

1) the most efficient way to exchange heat between steams in new processes, and;

2) heat integration improvement ideas in existing processes.

Examples of these heat exchange networks are:

- Crude Unit Preheat Trains
- FCCU Main Fraction Pumparound Circuits
- Coking Unit Combination Tower Pumparounds

Simulation Sciences HEXTRAN program and the Linhoff-March Pinch Technology (available in the Aspen simulation program) are used for this purpose.

It is important to note that these heat exchange network simulations should be used along with the main tower simulation until duties, rates, and temperatures are consistent in both models (to accurately evaluate the process).

Many times refiners monitor heat exchange performance with/against network simulations on a regular basis to establish exchanger cleaning schedules and benefits.

Reactor simulations

Simulations to predict reactor yields are being used more often these days. These reactor models include: Hydrotreaters, Cokers, FCCU's, Reformers, Alkylation Units, and Sulfur Plants. Although the catalyst and/or technology companies still provide the expected and guaranteed yields, refiners are seeing the need to evaluate day-to-day changes in feed rate and composition in these reactors to anticipate problems and operate efficiently.

For example, several factors affect the amount of propylene to alkylate, if any. These factors include:

1) The market for chemical-grade and polymer-grade propylene.

2) The propane/propylene yield.

3) The propane/propylene splitter capacity.

An alkylation model would allow the refiner to evaluate the effects before doing it in the field. Another example is the expected FCCU yields from varying amounts of residual cracking.

The Simulation Sciences-PROCESS/PRO-II and Chemshare programs allow users to specify reactors in different ways:

- plug flow and stirred-tank models, with in-line Fortran for the kinetics;
- equilibrium reaction equations and approach to equilibrium relationships, and;
- simpler conversion versus temperature relationships.

Refiners are also using reactor model simulations to more accurately time and justify catalyst change outs.

Piping networks

Piping network simulations are used to determine new and/or evaluate existing system hydraulics. This is especially important when evaluating/designing unit expansions.

It is often wise to use a piping network simulation program along with a heat exchange network for complex preheat trains with multiple parallel paths. Inaccurate pressure designations on streams in heat network programs will produce inaccurate heat network solutions.

Detailed equipment programs

Simulation Sciences-PROCESS/PRO-II, Chemshare, Aspen, and HYSIM programs all have equipment modules that allow users to model: pumps, compressors, heat exchangers, coolers, heaters, drums, etc.

These models afford accurate heat exchange, pressure drop, heat of compression, energy usage, etc., process calculations. One such example is interstage cooling economics for multi-stage compressors. A simulation model can be used to determine the heat exchange, knock out drum, and piping requirements (capital costs) of interstage cooling/separation versus compressor horsepower savings to determine an energy efficient compressor design or revamp.

These equipment modules, however, are not made for detailed mechanical design of equipment. There are many separate detailed equipment design programs that exist. These Rating and/or Design Programs include:

- Tower Trays and/or Packing
- Fired Heaters and Boilers
- Heat Exchangers
- Shell & Tube
- Plate & Frame
- Core
- Air Coolers
- Cooling Towers
- Pumps and Compressors
- Relief Valves

These can be accessed, if needed for specific problems.

Other uses

These simulation models are also used for non-simulation tasks, as well. For example, stream heating/cooling curves and physical properties can be generated for input to detailed equipment sizing software and/or specifications. Another common use is reconciling inconsistent field data by the use of material and energy balance algorithms.

Summary

The keys to using a simulation program effectively are:

- Understand how equipment is modelled in the program.
- Know that the simulations results are only as accurate as the input information (feed characterization and process specification).
- Confirm the model with existing operation, if possible.
- Invest the time to develop a model for future, as well as current studies. An accurate model is always used for more than its original intention.

APPENDIX C. CRUDE OIL ANALYSIS

TBP curves for Russian crude oil

Figure 10 - Temperature vs. Yield
Figure 11 - Tenperature vs. Density
Figure 12 - Temperature vs. Sulfur Content
Figure 13 - Temperature vs. Viscosity
Figure 14 - Light End Analysis

Figure 10

TBP CURVES FOR SOVIET CRUDE OIL
TEMPERATURE VS. YIELD

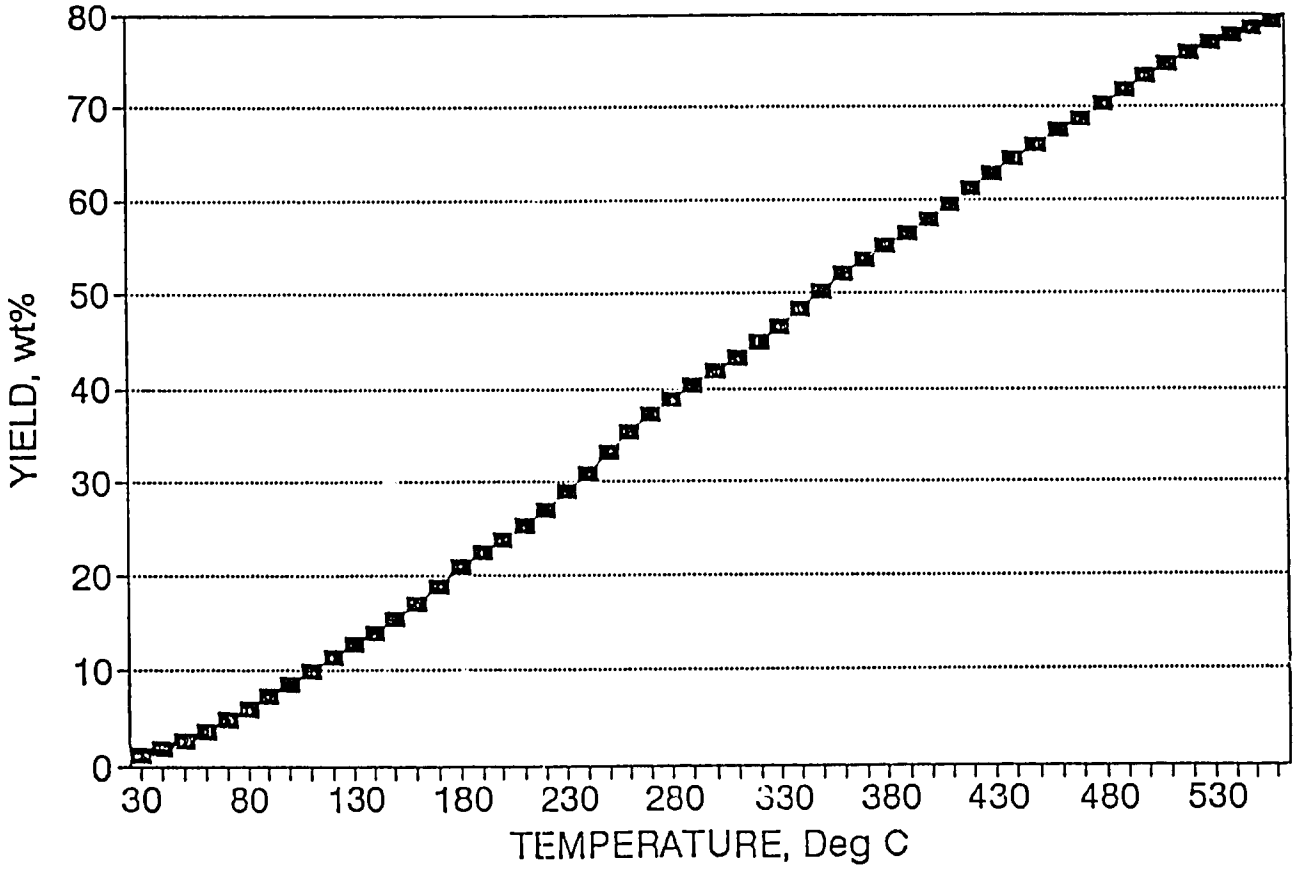

Figure 11

TBP CURVES FOR SOVIET BLEND CRUDE OIL
TEMPERTURE VS. DENSITY MID-POINT

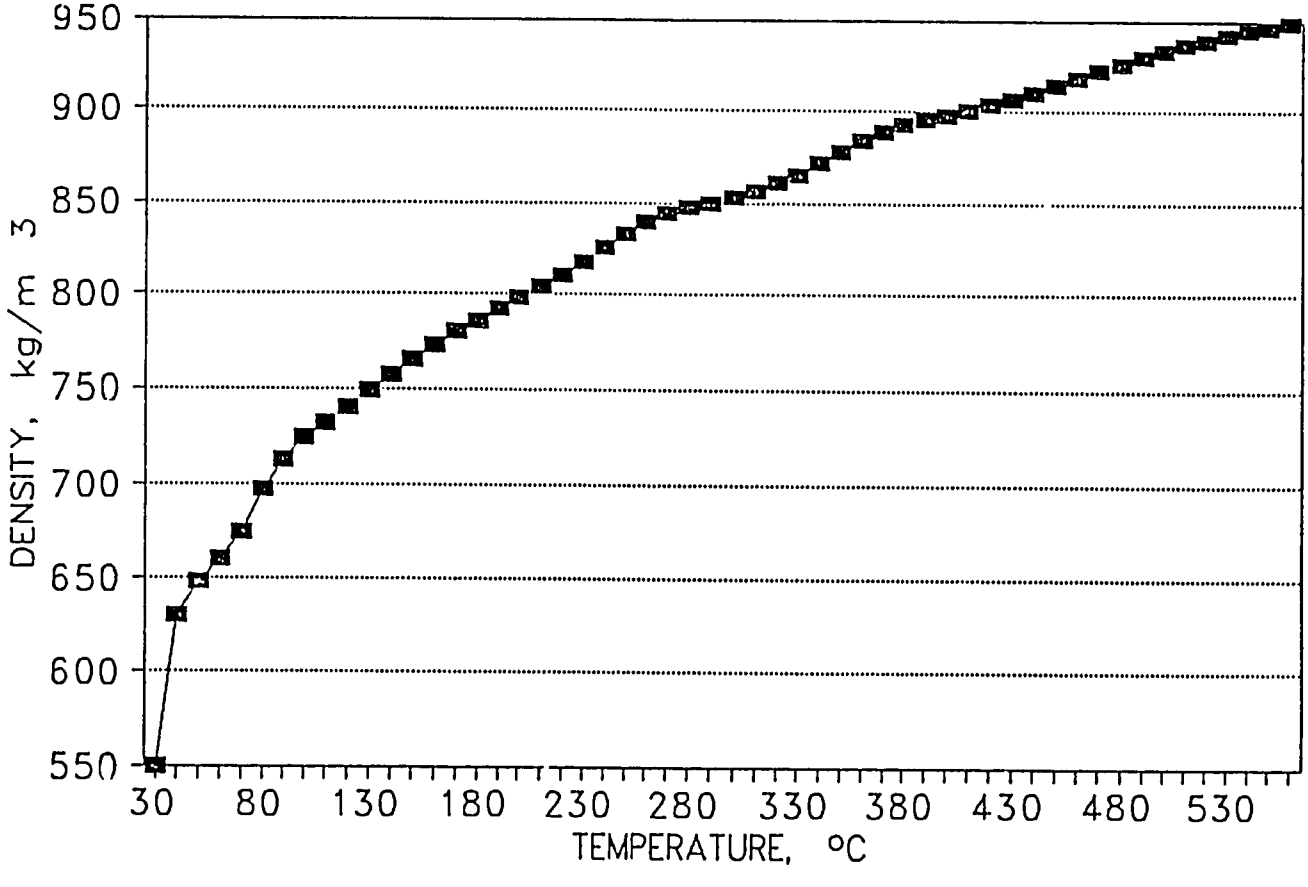

Figure 12

TBP CURVE FOR SOVET BLEND CRUDE OIL
TEMPERATURE VS. SULFUR CONTENT

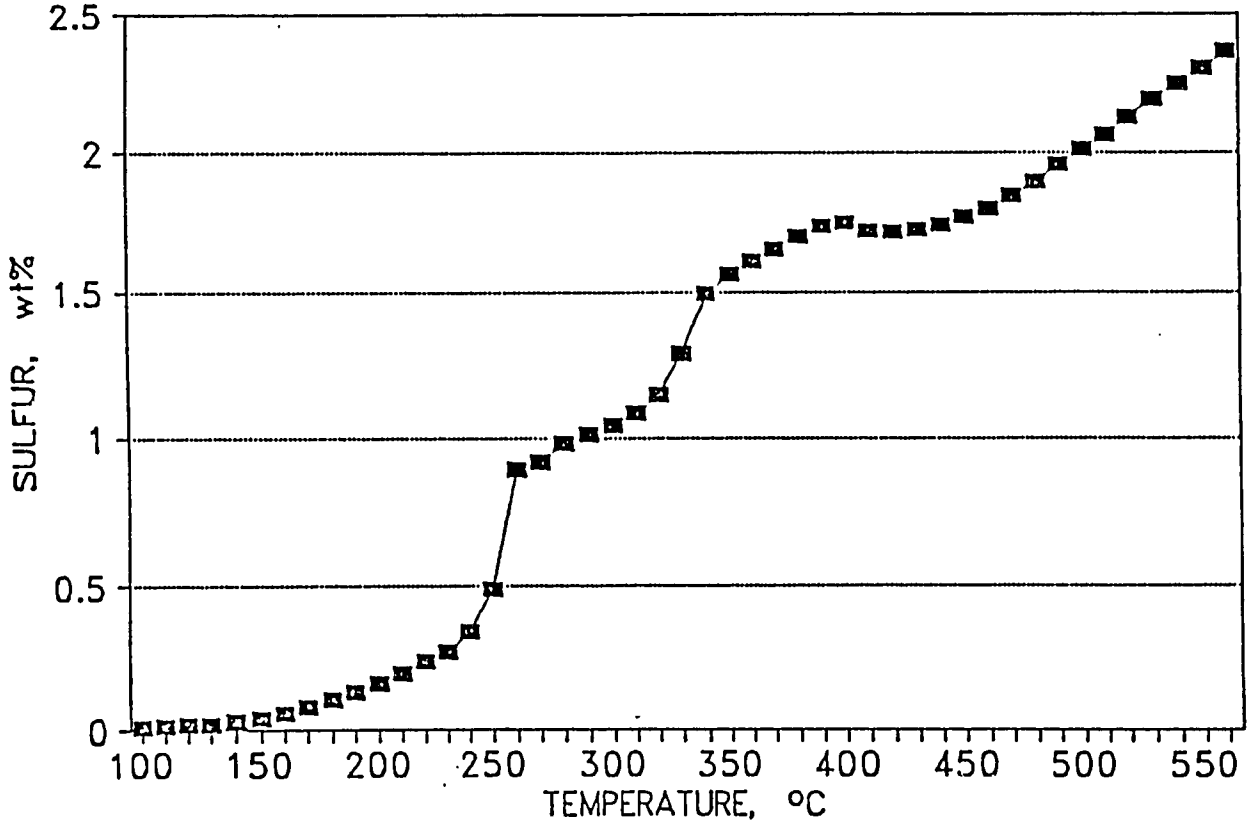

Figure 13

TBP CURVE FOR SOVIET BLEND CRUDE OIL
TEMPERATURE VS. VISCOSITY AT 20%

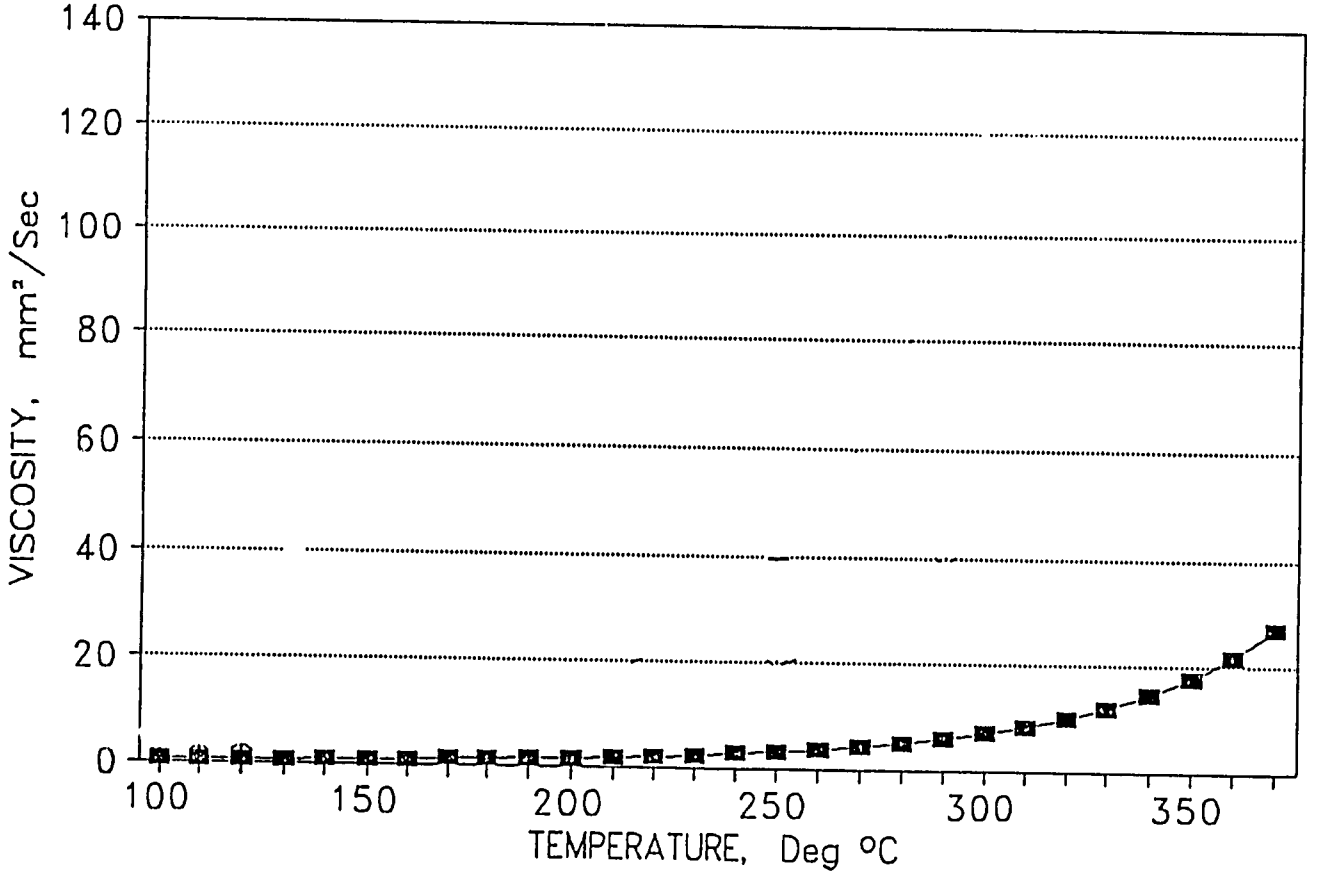

Figure 14

LIGHT ENDS ANALYSIS

COMPONENT	WT%
C_2H_6	0.06
C_3H_8	2.40
C_4H_{10}	19.55
C_5H_{12}	39.00
C_6H_{14}	34.53
C_6+	4.46
TOTAL	100.00

USAID

TERMS OF REFERENCE

DESCRIPTION/SPECIFICATIONS/WORK STATEMENT

Component #2: A PETROLEUM REFINERY EFFICIENCY IMPROVEMENT ENERGY CONSERVATION PROGRAM

1. BACKGROUND

The petroleum sectors of Bulgaria, Czechoslovakia, Poland, Romania, and Yugoslavia (as well as that of Hungary) are emerging from a 40-year period of centrally-planned crude supplies and centrally-controlled markets. Practically all of the petroleum refineries in these six countries were built, or modernized, during this period.

Among the five countries, it appears that Bulgaria has three separate refineries having an aggregate throughput of 300,000 B/D; Czechoslovakia has seven aggregating 455,000 B/D; Poland nine with an aggregate throughput of 385,000 B/D; Romania thirteen aggregating 617,000 B/D; and Yugoslavia seven with an aggregate capacity of 609,135 B/D. Now, these refineries face changing circumstances.

First, it is likely that the existing refineries were designed to process a narrow slate of crude oils supplied from the USSR. Now, crude supply options have broadened so that supplies can be bought on the world market through spot and contract purchases. The USSR appears to be phasing out as a primary crude supplier to these countries. Accordingly, potential future crude oil slates can have a much broader range of physical and chemical characteristics than has heretofore been the case.

Second, market conditions for the refinery product slates have been based on the principles of a centrally-planned national economy. Expectations, because of the shift to democratic pluralism in these countries, are for a higher standard of living for the populations, for a greater awareness of the need for environmental protection, and for shifts in refinery-product slates that will occur because of these. The capabilities of the mix of processing units in the refineries in each country to adjust simultaneously to changing crude slates and product slates will be brought into question.

Third, greater public awareness of preserving environmental quality and of the environmental deterioration that has occurred during the past forty years are likely to force major changes in refinery design and operating practices to reduce noxious gaseous, liquid, and solid waste emissions. This awareness is likely to emphasize production of unleaded gasolines and alcohol additives, and perhaps also the exploration of neat alcohol and compressed natural gas alternatives. At the same time, changes in refinery operations will be demanded to reduce noxious emissions to the extent practical.

171

Finally, tightened economic conditions will force refinery managements to improve operations through introducing more efficient internal utilization of energy and through implementing opportunities for energy conservation. These improvements will have to occur while anticipating changing crude and product conditions and with an inventory of processing units in the refineries that in all likelihood has a limited flexibility to adapt to changes. The roles for alternative fuels could emerge here also.

Compounding the problem of managing change are shortages of foreign exchange, increases in foreign exchange demands because of purchase of crude oil supplies on the open market at now greatly increased price levels, and demands on investment capital that will be generated by the political and economic changes in these countries. Foreign investment by international oil companies in petroleum-sector investment opportunities could bring needed foreign exchange and could potentially lead to new refinery construction at strategic locations and the scrapping of some existing refineries.

The complexity of the relationships within the petroleum sector system is somewhat illustrated in Figure 1 of this Appendix.

Obviously, managing the process of change will take some time. The inputs for analysis are not yet completely available. Economic benefits will depend on national policies, formed or as yet unformed. The current crude supply and pricing picture is an unstable one. Foreign investor interest in the five countries probably varies among the countries and perhaps is not yet well focused on the petroleum sector.

Nevertheless, a start in an analysis to improve the situation can be made provided the focus of initial efforts is on a rationalization of the petroleum-system situation in each of the five countries. Rationalization intends (a) efficient, effective, and environmentally-acceptable improvement in the production of petroleum products to serve current domestic markets, (b) adaptation of current operating practices to serve emerging domestic markets from expected, cost-attractive, crude-oil slates, and (c) identification of the improvements in terms of consistency with the privatization policies in each of the five countries.

2. GOAL AND OBJECTIVES

Accordingly, the generic goal of the work is to begin a process that ultimately can lead to such rationalization of the petroleum sectors in each of the five countries. The end results for the work at this time are

a. an organized data base comprising available data and information relevant to producing inputs for later use by others (when sufficient data and information for the

various components of the petroleum system, such as is shown in Figure 1, become available) in a commercial linear programming model to optimize the petroleum system in each country,

b. low-cost improvements in the energy efficiency and environmental impact of selected refineries producing the current product slates that have been implemented during the course of the Contractor's work, and

c. the identification of further improvements which can only be implemented at a later time by others through making a significant investment that needs to be justified.

Accordingly, the objectives of the work focus on the five countries and are

a. for the refinery sector in each country and to the extent that relevant information is available, to describe the process mix in each refinery, the technical capabilities, and current operating practices in a form that (1) provides a data base for undertaking further and future work by others aimed at optimizing the petroleum system in each country and (2) more specifically for the present, enables at least qualitative judgments to be made of effects of changing crude-oil slates on refinery product slates;

b. for a sample of two refineries each in Czechoslovakia, Poland, and Yugoslavia and one refinery each in Bulgaria and Romania, to identify changes in operating practices and low-cost modifications to equipment that can be immediately implemented to increase the efficiency of energy utilization, to conserve energy by avoiding unjustified use, and to reduce as far as practical undesirable gaseous, liquid, and solid effluents;

c. for the same refinery selection in each country, to identify, characterize, and recommend more-extensive changes in practices and equipment and modifications to the process units, which appear justifiable but at the same time require further study possibly with inputs that may not yet be available; and

d. to assist the management of each refinery selected in each country, as needed, in the implementation of the changes identified in b. above through on-the-spot assistance (including training sessions for refinery personnel).

3. APPROACH

This work statement is intended to be generic and applicable in each of the five countries. The intent is to undertake the work with two separate teams of specialized personnel operating in parallel. One team will undertake the work in three countries sequentially and the other in the two remaining countries sequentially. The two teams will be supported as appropriate by a home-office team. The work of the three teams will be coordinated by a program director.

In order to permit pragmatic planning for efficient accomplishment of the work, the first activity will be a reconnaisance in the five countries, probably lasting five weeks, during which needed technical and administrative inputs will be developed and needed local support arranged for. In order to gauge the effectiveness of the work, the final activity will be return visits to the five countries, probably over a two week period when the final reports have been submitted, for the purpose of discussing the results and answering questions that may arise.

The expectations are that considerable data and information will be collected for the countries and for the operating oil refineries. Also, expectations are that this data base, aside from the needs of the Contractor's work program and even after the completion of his work, can provide continuing inputs to other efforts aimed at improving operations in the non-refinery components of the petroleum-sector system (see Figure 1) or to follow-on efforts aimed at implementing the longer-term improvement opportunities identified in the work. Therefore, data and information collection is to be computer oriented with programs organized to be user-friendly and documented accordingly in the Contractor's final reports.

Furthermore, in the identification of improvement opportunities relevant to achieving the objectives of the work, expectations are that benefit/cost estimates will be prepared and/or evaluations performed as far as practical. Estimates and calculations will, with little doubt, require assumptions to fill in for a lack of data. Therefore, estimate preparation and evaluation of opportunities is also to be computer-oriented and user-friendly with programs designed to permit asking "what if" questions, with documentation incorporated in the Contractor's final reports.

Petroleum refineries and petrochemical manufacturing plants are closely linked both physically and through refinery products that become petrochemical feedstocks. The work shall be confined to petroleum refineries only. For this purpose the refinery shall be defined as comprising all

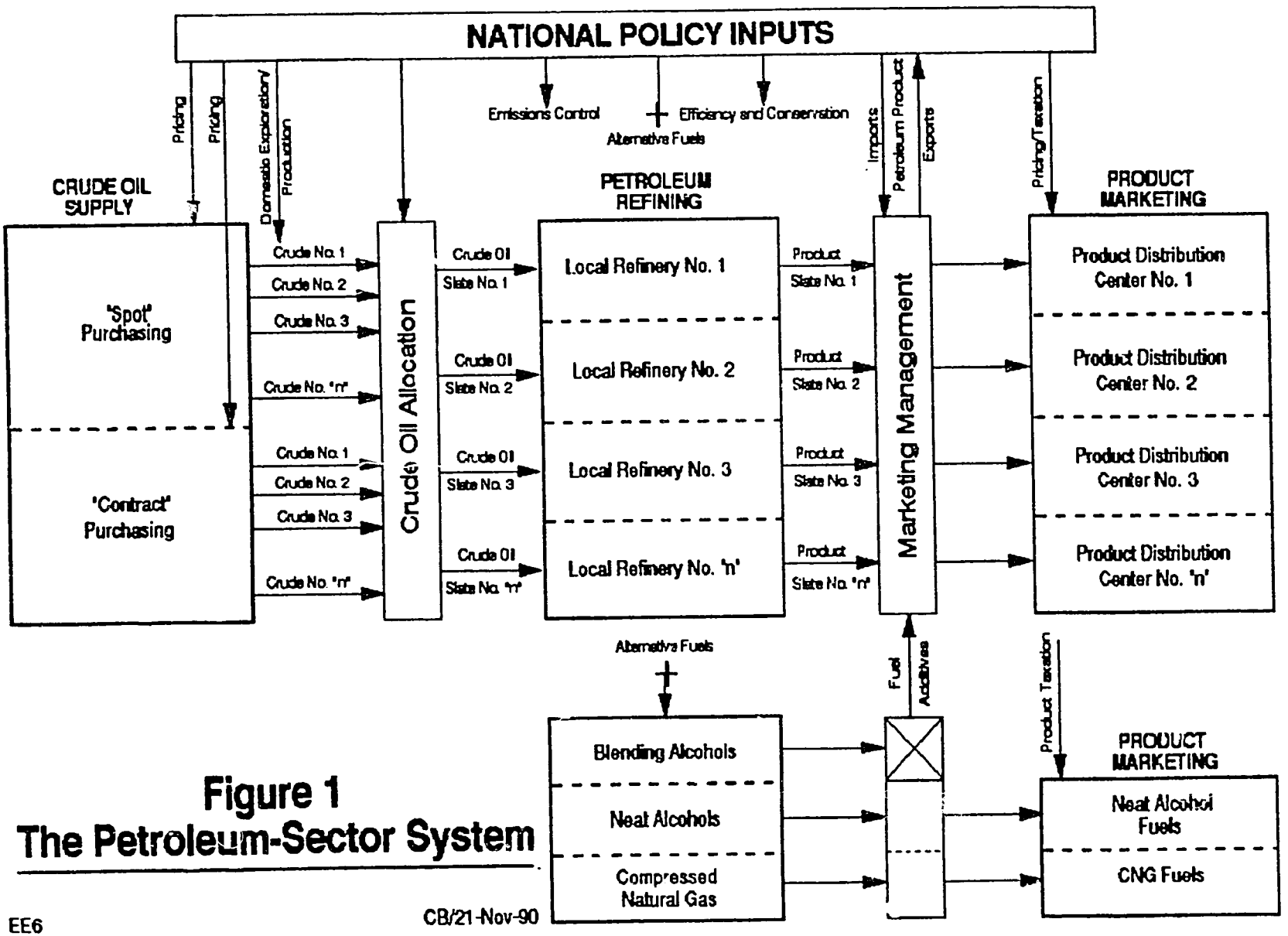

Figure 1
The Petroleum-Sector System

EE6

CB/21-Nov-90

installations that pertain to the receipt of the crude oil through to processing and storage of the refinery's primary products. A primary product shall be defined as one that has been fully processed so as to be marketable. On-site facilities to blend different gasoline streams, produce, and process them to final specifications are refinery units. Refinery gas and/or liquid streams that are delivered to other units for further processing, such as to ethylene, ammonia, or aromatic extraction, are to be considered as finished products.

Equipment purchases (both for test work and for permanent installation) needed for the implementation of short-term improvements shall be defined and justified. A brief report shall be submitted for A.I.D. approval before committing to purchase.

4. TASKS

The following tasks are foreseen for the work.

a. Refinery Characterization

The work is technically oriented. It involves preparing for each refinery in each country, a block flow diagram showing the processing units and the support facilities between receipt of the crude oil slate and the dispatch of the product slate to market. The depth of detail for this characterization will provide

1) a description as far as practical of the capability of each processing unit in terms of feedstocks and feedstock variability and product yields and specifications; of the operating conditions, age, mechanical condition of the processing units; of the consumption of utilities (electricity, water, catalysts, chemicals, etc.); and of the quantities and characteristics of the effluents.

2) a description as far as practical of the support facilities in terms of crude and product storage capacity, fire protection and personnel safety provisions, and methods for segregation, collection, treatment, and disposal of solid, liquid, and gaseous effluents.

3) a written operating history of a refinery for the previous 12-month period emphasizing crude-oil receipts and specifications, product slates produced, unusual operating experiences, routine maintenance performed, and emergencies encountered during operations.

4) a description of the method of electricity supply, whether entirely purchased, self-generated, or a combination of both; and a technical description of the design and operation of the power house (if any) in terms of energy balance and heat rate.

b. Refinery Financial Structure

The objective in this task will be to collect data on local practices from the refinery management and/or from other appropriate sources that can be evaluated to establish the basis whereby the cost of each improvement opportunity can be pragmatically estimated and attractiveness of the opportunity determined. The expectation is that attractiveness will be based in part on (a) the magnitude of the capital requirement, including the foreign exchange component, and (b) the period of time within which the cost of the improvement can be recovered through savings in operating costs achieved. Attractiveness shall refer also to quantification (if practical) of benefits from reduced emissions of objectionable effluents. No need exists to relate emissions for compliance with any existing standards.

c. Selection of the Refineries

The refineries to be subjected to more detailed study, in order to meet Objectives b, c, and d above, shall be selected during the reconnaisance period by mutual agreement between the Contractor and the host-government agency concerned. For Contractor's guidance, the main criterion for selection should be based on achieving a maximum efficiency/environmental improvement impact for a minimum effort and cost in a minimum time frame. However, the selection shall be subject to A.I.D. concurrence.

d. Refinery Housekeeping

For each country and for each selected refinery, the work involves observation over a period of time of the refinery operations in order to detect opportunities to improve operating and maintenance practices, such as by

1) eliminating the presence of leaky valve-stems and steam traps,

2) incrementally insulating excessively hot surfaces,

3) avoiding poor combustion conditions (high oxygen content in chimney gases because of excessive excess air beyond combustion needs and/or leaky furnace settings),

4) avoiding excessive carbon monoxide in chimney gases (poor combustion, inadequate mixing of fuel and air),

5) increasing the frequency with which heat transfer surfaces are cleaned of fouling deposits,

6) reviewing whether rotating machinery is adequately maintained in terms of lubrication and condition of bearings, and

7) reviewing whether plant instrumentation is adequate and/or well-enough maintained to provide accurate readings of operating conditions and is appropriately configured to permit efficient operation.

e. Heat Conservation

The work involves observations over a period of time to evaluate the adequacy of provisions to recover heat that otherwise is wasted. The best example is a lack of airheaters to recover heat from hot chimney gases in refinery furnace equipment. Another example is the design of feedstock preheat heat exchanger trains and the opportunity to introduce an additional heat exchanger that can be justified now because of higher energy prices.

f. Process Unit Operating Conditions

The work involves analyzing the operating conditions and control systems installed for each processing unit in a selected refinery in order to determine whether these are appropriate for the products from the feedstock. This analysis can be particularly significant if current feedstocks and/or product slates have changed from the conditions on which the original design of the processing unit was based.

g. Refinery Energy Balance

The work involves analysis of the flows of energy among the different processing units comprising each selected refinery as well as within the processing units themselves in order to identify opportunities for energy-efficiency improvement in the short term and long term.

175

The analysis should attempt to provide a data base to assist others to foresee the longer term opportunities for a more efficient energy balance through review of the market demand, future crude oil supplies, and the design and applicability of the processing units themselves. Ultimately, the product of such analysis by others could be decisions to abandon certain units, modify others, or add new units, all providing for greater thermal efficiency.

Accordingly, the Contractor shall attempt to foresee as far as practical the prospect that such future analysis could invalidate the benefits perceived for an identified long-term opportunity from a presumption that a substantial remaining useful life for the process unit exists.

h. Fuel Switching

For each selected refinery, the work shall include comment and expert opinion on the practicality of replacing petroleum hydrocarbon fuels with indigenous coal. Refinery furnaces have in the past been fired with coal. Fuel switching to coal to save on oil imports could be a viable option. However, the Contractor shall focus on a different technical option for coal utilization, in order to reduce investment, by considering high fuel-density, coal/water slurry fuels as a direct replacement for fuel oil with minimum retrofit. Sootblowers could handle the higher ash content.

Consideration of such an option should be limited to assessing its practicality in terms of coal supply and characteristics, the state-of-the-art of fuel formulation, and adaptability to existing combustion equipment.

i. Refinery Emissions

For each selected refinery, the work involves preparing a survey of all solid, liquid, and gaseous refinery effluents in terms of sourcing, probable quantities, and chemical analyses, and suggesting practices to be employed in the refinery for control to reduce such emissions that reflect experiences elsewhere where emission control laws are in effect. There is no need to relate this task to showing compliance of emissions with standards that may be established by the World Bank or the U.S. Environmental Protection Agency.

j. Data Evaluation

The work involves computer-oriented organization of the data and information collected, evaluation of the data and information, compiling cost estimates, performing financial calculations, ranking opportunities in terms of the adopted criteria, and preparing final reports to meet the objectives of the work.

ABBREVIATIONS

°API	deg API (gravity of oil fractions, defined by API)
°C	degree Celsius
°F	degree Fahrenheit
%	per cent
/	per (e.g., tonnes/day)
A	ampere
ACFM	actual cubic feet per minute
AFBC	Atmospheric Fluidized Bed Combustion
API	American Petroleum Institute
ASTM	American Society of Testing Materials
BACT	best available control technology
BFW	boiler feed water
BOD	biological oxygen demand
BPCD	barrels per calendar day
BPSD	barrels per stream day
BS&W	Basic, Sediment and Water
BTX	benzene toluene xylene
Btu	British thermal units
C.F.	characterization factor
CCR	continuous catalyst regeneration
COD	chemical oxygen demand
CV	calorific value (heat of combustion)
DCS	distributed control system
DEA	Diethanolamine
EP	end point
EPA	Environmental Protection Agency (U.S.)
FBP	final boiling point
FCC	fluid catalytic cracking
FGD	flue gas desulfurization
FOE	fuel oil equivalent
G	giga(10^9)
GCV	gross calorific value

GJ	giga joules
HC	hydrocarbons
HDS	hydrodesulfurization
HP	high pressure
Hg	mercury
Hz	hertz
IBP	initial boiling point
IGT	Institute of Gas Technology
ISBL	inside battery limit
J	joule
KRW	Kellogg Rust Westinghouse
LHSV	Liquid Hourly Space Velocity
LP	linear programming/low pressure
Lube	Lubricating
M	mega(10^6)
MEA	Monoethanolamine
MEK	methyl ethyl ketone
MHC	mild hydrocracking
MON	motor octane number
MPa	Megapascal, a unit of pressure
MSW	municipal solid waste
MTBE	methyl tertiary butyl ether
MVA	mega volts ampere
MVAR	mega voltampere reactive
MW	mega watts
NAAQS	National Ambient Air Quality Standards
NCV	net calorific value
NO_x	Oxides of Nitrogen
NPDES	National Pollutant Discharge Elimination System
OSBL	outside battery limit
OVA	Organic Vapor Analyzer
PFBC	Pressurized Fluidized Bed Combustion
PONA	Paraffins, Olefins, Naphthanes and Aromatics
Pa	pascal, a unit of pressure
RCC	reduced crude conversion
RON	research octane number
RTD	Resistance Temperature Detector
RVP	Reid Vapor Pressure
S.R.	Straight Run
SCFD	standard cubic feet per day

SCFH	standard cubic feet per hour
SCFM	standard cubic feet per minute
SG	specific gravity
SO_x	Oxides of sulfur
SRC	solvent refined coal
T	tera (10^{12})
TBP	true boiling point
TDS	total dissolved solids
TEFC	totally enclosed fan cooled
TEL	tetraethyl lead
TOC	total organic carbon
TSS	Total Suspended Solids
UOP K	UOP Characterization Factor
V	volt
VOC	volatile organic compound
WWTP	wastewater treatment plant
WATSON K	Watson Characterization Factor
XP	explosion proof
atm	atmosphere or atmospheres
bar	bar
cP	centipoise
cSt	centistokes
cal	calorie
cm	centimeters
cps	cycles per second
day	day
ft^3	cubic feet
ft	feet or foot
g	gram
gal	gallons
gpm	gallons per minute
h	hour
hp	horse power
in	inch or inches
k	kilo
kA	kiloamperes
kPa	kilo pascal, a unit of pressure
kV	kilovolts
kWh	kilowatt hour
kcal	kilo calories

kcal	kilo calories
kg	kilogram
kg/cm^2	kilogram per square centimeter
lb	pound or pounds
liter	liter or litre
m	meter or metre
max.	maximum
mg	milligram
mi	mile
million	million(10^6)
min	minute
min.	minimum
mm	millimeters
mol	mole
n	normal
ohm	ohm
pH	pH, a measure of acidity or strength of a base.
percent	percent(or %)
phase	phase (electrical)
ppm	parts per million
ppmv	parts per million (volume)
ppmw	parts per million (weight)
ppb	parts per billion
psi	pounds per square inch
psia	pounds per square inch absolute
psig	pounds per square inch gauge
ptb	pounds per thousand barrels of oil
rpm	revolutions per minute
sec	seconds
tonne	metric ton
tonnes	metric tons
vol	volume
wt	weight
y	year