EVALUATION AUDIT REPORT
POLISH PETROLEUM REFINERY
PLOCK, POLAND

A SELECTIVE REFINERY ANALYSIS FOR: OPERATION, ENERGY USE, ENVIRONMENTAL IMPACTS AND IMPROVEMENT OPPORTUNITIES

MAY, 1992

PREPARED BY: DAVY MCKEE CORPORATION, CHICAGO, IL USA

U.S. EMERGENCY ENERGY PROGRAM FOR EASTERN AND CENTRAL EUROPE

U.S. AGENCY FOR INTENATIONAL DEVELOPMENT
BUREAU FOR EUROPE
WASHINGTON, D.C. 20523

EVALUATION AUDIT REPORT
POLAND PETROLEUM REFINERY
PLOCK

A SELECTIVE REFINERY ANALYSIS FOR:
OPERATION, ENERGY USE, ENVIRONMENTAL IMPACTS
AND IMPROVEMENT OPPORTUNITIES
MAY, 1992

PREPARED BY: DAVY MCKEE CORPORATION, CHICAGO, IL USA
300 SOUTH RIVERSIDE PLAZA
SUITE 1800
CHICAGO, IL 60606
(312) 669-7000

PROJECT MANAGER: ARKADIUSZ WALINSKI
LEAD / PROCESS: WILBUR A. HOLVE
ELECTRICAL: TADEUSZ P. RASLAWSKI
INSTRUMENTATION: ALEXANDER I. STEINHAUS
MECHANICAL: NORRIS A. ROBERTS
LEAD AUTHOR: ROBERT A. JURISH

U.S. EMERGENCY ENERGY PROGRAM FOR EASTERN AND CENTRAL EUROPE

U.S. AGENCY FOR INTERNATIONAL DEVELOPMENT
BUREAU FOR EUROPE
OFFICE OF DEVELOPMENT RESOURCES
ENERGY AND INFRASTRUCTURE DIVISION
WASHINGTON, D.C. 20523

USAID CONTRACT EUR-0015-C-00-1011-00

Davy

REFINERY EVALUATION AND AUDIT
MAZOVIAN, POLAND

TABLE OF CONTENTS

EXECUTIVE SUMMARY

A. INTRODUCTION

1. OBJECTIVES
2. REFINERY SELECTION
3. SUMMARY OF FIELD ACTIVITIES
4. REFINERY DESCRIPTION
5. TYPES OF ENERGY IMPROVEMENT OPPORTUNITIES
6. TYPES OF ENVIRONMENTAL EMISSIONS IMPROVEMENTS

B. REFINERY ENERGY BALANCE

1. OPERATING UNIT ENERGY USE

2. FUEL SYSTEM
2.1. Fuel Sources
2.2. Fuel Distribution
2.3. Fuel Users

3. STEAM SYSTEM
3.1. Steam Generation
3.2. Steam Levels
3.3. Steam Users

4. ELECTRIC POWER SYSTEM
4.1. Electricity Sources/Generation
4.2. Electric Distribution System
4.3. Electric Power Users

5. COOLING WATER SYSTEM
5.1. Typical Cooling Tower
5.2. Water Treating
5.3. New Cooling Tower Design
6. AIR COOLERS
6.1. Typical Air Cooler Design
6.2. FCC Unit #2
7. ENERGY RECOVERY SYSTEMS
7.1. Power Plant
7.2. Fired Process Heaters
7.3. Other Energy Recovery Systems

C. **REFINERY FLEXIBILITY**

1. OVERVIEW

2. CRUDE UNIT II
2.1. Process Flow Diagram
2.2. Feedstock
2.3. Unit Flexibility
2.4. Operational Sensitivity
2.5. Product Specifications
2.6. Unit Yields
2.7. Unit Modification Potential
2.8. Capacity Increase Potential
2.9. Operating Practices
2.10. Replacement/Shutdown Observations

3. NAPHTHA HYDROTREATER/PLATFORMER I
3.1. Process Flow Diagram
3.2. Feedstock
3.3. Unit Flexibility
3.4. Operational Sensitivity
3.5. Product Specifications
3.6. Unit Yields
3.7. Unit Modification Potential
3.8. Capacity Increase Potential
3.9. Operating Practices
3.10. Replacement/Shutdown Observations

4. FLUID CATALYTIC CRACKER I AND II
4.1. Process Flow Diagram
4.2. Feedstock
4.3. Flexibility
4.4. Operational Sensitivity

4.5. Product Specifications
4.6. Unit Yields
4.7. Unit Modification Potential
4.8. Capacity Increase Potential
4.9. Operating Practices
4.10. Replacement/Shutdown Observations

5. PLANT LIMITATIONS
5.1. Unit Capacities
5.2. Product Requirements
5.3. Fuel System
5.4. Steam System
5.5. Electrical Power System
5.6. Tankage
5.7. Other Limitations

D. **HEAT CONSERVATION**

1. HEAT TRANSFER PRACTICES

2. UNIT HEAT BALANCES
2.1. Crude Unit II
2.2. Naphtha Hydrotreater/Platformer I
2.3. Fluid Catalytic Cracker I and II

3. HEAT TRANSFER EQUIPMENT ANALYSIS
3.1. Fired Heaters
3.2. Heat Exchange Trains
3.3. Waste Heat Recovery
3.4. Economics of Increasing Surface Areas

4. STEAM SYSTEM
4.1. Steam Balance and Utilization
4.2. Selection of Pressure Levels
4.3. Condensate System
4.4. Insulation
4.5. Potential Effect of Energy Savings Projects to Steam Balance

5. HEAT REJECTION SYSTEMS
5.1. Cooling Water systems
5.2. Air Coolers
5.3. Equipment, Piping and Stream Heat Losses
5.4. Recovery Systems
5.5. Tracing and Temperature Maintenance Systems

6. USE OF HOT OIL LOOPS

E. **MECHANICAL DRIVE SYSTEMS**

1. COMPRESSORS/FANS
2. SPECIAL PUMPS
3. ELECTRIC MOTORS
4. STEAM TURBINES
5. SPECIAL EQUIPMENT

F. **MAINTENANCE/MECHANICAL OBSERVATIONS**

1. OVERALL IMPRESSIONS

2. UNIT REVIEW
2.1. Crude Unit II
2.2. Naphtha Hydrotreater/Platformer I
2.3. Fluid Catalytic Cracker I and II

3. EQUIPMENT CONDITION SUMMARY
3.1. Fired Heaters and Boilers
3.2. Heat Exchangers
3.3. Vessels
3.4. Rotary Equipment
3.5. Steam System
3.6. Piping and Valves
3.7. Instrumentation
3.8. Electrical Equipment
3.9. Corrosion
3.10. Insulation Condition
3.11. Specialty Items

4. MAINTENANCE
4.1. Policies
4.2. History
4.3. Current Practices

G. **ENERGY LOSS MONITORING SYSTEMS**

H. **FUEL SWITCHING/UTILIZATION**

1. REFINERY FUEL SYSTEM

2. GENERAL REVIEW OF COAL USE IN REFINERY SERVICE
2.1. Direct Coal Firing
2.2. Coal Gasification
2.3. Other Technologies

3. COAL AT THE MAZOVIAN REFINERY
3.1. Availability and Characteristics of Coal
3.2. Potential for Use
3.3. Economics of Use

I. **REFINERY EMISSIONS**

1. SUMMARY OF ENVIRONMENTAL SURVEY
1.1. Refinery Sulfur Balance
1.2. Air Emissions
1.3. Water Quality
1.4. Solid Waste Disposal
1.5. Impact of Maintenance Practices in Generating Emissions
1.6. Evaporation Losses
1.7. Loss of Products to Solvents

2. HANDLING OF MATERIALS
2.1. Tetra-ethyl lead (TEL)
2.2. Aromatics
2.3. Solvents
2.4. Halogenated Hydrocarbons
2.5. Heavy Metals
2.6. Sulfur
2.7. H_2SO_4, HF
2.8. Combustion Products
2.9. Tars

3. MEASUREMENT OF EMISSIONS

4. SPECIFIC RECOMMENDATIONS

J. ENERGY EFFICIENCY IMPROVEMENTS

1. IMMEDIATE OPPORTUNITIES
2. MEDIUM TERM OPPORTUNITIES
3. LONG TERM OPPORTUNITIES
4. FURTHER WORK REQUIRED

K. ENVIRONMENTAL EMISSIONS REDUCTIONS

1. IMMEDIATE OPPORTUNITIES
2. MEDIUM TERM OPPORTUNITIES
3. LONG TERM OPPORTUNITIES
4. FURTHER WORK REQUIRED

APPENDICES

APPENDIX A. CHARACTERIZATION REPORT REFERENCE/ABSTRACT
APPENDIX B. TERMS OF REFERENCE
APPENDIX C. INSTRUMENTATION
APPENDIX D. ELECTRICAL
APPENDIX E. REFINERY ENERGY BALANCE AND "ENERGY DEMAND" CRITERIA
APPENDIX F. CRUDE TOWER SIMULATION AND CRUDE OIL PROPERTIES
APPENDIX G. ABBREVIATIONS

LIST OF TABLES

Table No.	Title	Page No.
B.1.1	ENERGY EFFICIENCY COMPARISON	B-5
B.1.2	ENERGY EFFICIENCY COMPARISON	B-6
B.2.1	TYPICAL FUEL GAS BLENDING	B-5
B.2.2	FUEL CHARACTERISTICS	B-5
B.4.1	ELECTRICAL ENERGY CONSUMPTION PER UNIT MAY 1990 TO APRIL 1991	B-8
C.2.5.1	SELECTED INTERMEDIATE PRODUCT PROPERTIES	C-5
C.2.6.1	CRUDE UNIT YIELDS (as reported)	C-6
C.3.6	UNIT YIELDS	C-12
C.4.6.1	UNIT YIELDS (wt%)	C-17
D.1	REFINERY UNIT ENERGY DEMANDS	D-1
I.1.1	SO_2 DISCHARGE DISTRIBUTION	I-2
I.1.2	SULFUR DISTRIBUTION	I-2
I.1.3.1	REFINERY WATER USAGE	I-5
I.1.3.2	WASTEWATER STANDARDS	I-7
AP-A.1.1	REFINERY UNITS DEVELOPMENT	AP-A-4
AP-A.1.2	MATERIAL BALANCE 1990/1991	AP-A-8
AP-A.2.1	STORAGE TANK CAPACITIES	AP-A-12
AP-A.3.1	CHEMICALS AND CATALYSTS CONSUMPTION (1990 and 1991)	AP-A-13
AP-A.5.1	WASTE WATER CHARACTERISTICS	AP-A-18
AP-A.9.1	POWER PLANT STEAM GENERATION	AP-A-22
AP-A.9.2	PROCESS PLANT STEAM GENERATION	AP-A-22
AP-A.9.3	GASOLINE PROPERTIES	AP-A-23
AP-A.9.4	LIQUIFIED PETROLEUM GAS (LPG) PROPERTIES	AP-A-23
AP-A.9.5	DIESEL FUEL PROPERTIES	AP-A-24
AP-A.9.6	FUEL OIL PROPERTIES	AP-A-25
AP-A.9.7	PROCESS UNITS YIELDS	AP-A-26
AP-A.9.8	UTILITIES CONSUMPTION - REFINERY PLAN 1991	AP-A-29
AP-A.9.9	ROMASHINKO CRUDE PROPERTIES	AP-A-31
AP-E.1	U.S. TYPICAL REFINERY UTILITY USAGE	AP-E-3
AP-E.2	U.S. TYPICAL REFINERY UTILITY USAGE	AP-E-4
AP-E.3	U.S. TYPICAL REFINERY UTILITY USAGE	AP-E-5
AP-E.4	U.S. TYPICAL REFINERY UTILITY USAGE	AP-E-6
AP-E.5	U.S. TYPICAL REFINERY UTILITY USAGE	AP-E-7
AP-E.6	U.S. TYPICAL REFINERY UTILITY USAGE	AP-E-8
AP-E.7	U.S. TYPICAL REFINERY UTILITY USAGE	AP-E-9
AP-E.8	U.S. TYPICAL REFINERY UTILITY USAGE	AP-E-10

AP-E.9 U.S. TYPICAL REFINERY UTILITY USAGE AP-E-11
AP-E.10 U.S. TYPICAL REFINERY UTILITY USAGE AP-E-12
AP-E.11 U.S. TYPICAL REFINERY TOTAL ENERGY USAGE AP-E-13
AP-E.12 U.S. TYPICAL REFINERY TOTAL ENERGY USAGE AP-E-14
AP-E.13 U.S. TYPICAL REFINERY TOTAL ENERGY USAGE AP-E-15
AP-E.14 U.S. TYPICAL REFINERY TOTAL ENERGY USAGE AP-E-16
AP-E.15 U.S. TYPICAL REFINERY TOTAL ENERGY USAGE AP-E-17
AP-F.1 CRUDE OIL PROPERTIES AP-F-15
AP-F.2 PLOCK CRUDE UNIT SIMULATION AP-F-17

LIST OF FIGURES

Figure No.	Title	Page No.
Figure 1	Mazovian Refinery Block Flow Diagram	A-4
Figure 2	Atmospheric/Vacuum Distillation Unit No. 1	C-3
Figure 3	Catalytic Reforming Unit No. 1	C-11
Figure 4	Fluid Catalytic Cracking Unit No. 2	C-15
Figure 5	Atmospheric Crude Tower Simulation Case 1	AP-F-2
Figure 6	Atmospheric Crude Tower Simulation Case 2	AP-F-3
Figure 7	Atmospheric Crude Tower Simulation Case 3	AP-F-4
Figure 8	Atmospheric Crude Tower Simulation Case 4	AP-F-5
Figure 9	Atmospheric Crude Tower Simulation Case 5	AP-F-6
Figure 10	Atmospheric Crude Tower Simulation Case 6	AP-F-7
Figure 11	Atmospheric Crude Tower Simulation Case 7	AP-F-8
Figure 12	Atmospheric Crude Tower Simulation Case 8	AP-F-9

EXECUTIVE SUMMARY

In 1991, the United States agency for International Development (USAID) retained the Chicago office of Davy McKee Corporation (DMC) to perform a technical study of the seven refineries that constitute the Petroleum Refining Industry of Poland. The results of the study are presented on two levels: refinery characterization and selected refinery evaluation.

The project started with meetings in early December 1990, between the USAID personnel and Polish Ministry. During the meetings, a plan and schedule were developed for the participation of Poland in the U.S. Emergency Energy Program. This evaluation report on the Mazovian/Plock Refinery contains the elements agreed upon at these initial meetings. The scope of work or USAID terms of reference for this project maybe found in Appendix B of this report.

Two of the national refineries, Gdansk and the Mazovian refinery in Plock were selected for an evaluation and audit study because of the potential of achieving substantial improvement in energy efficiency and disposal of solid, liquid, and gaseous effluents - both by reduction in volume and method of handling. Order-of-magnitude capital requirements and return on investment associated with identified opportunities form part of these evaluation reports.

At the outset of the project, teams were organized for both the characterization and evaluation efforts and consisted of engineering professionals with many years of experience in their respective engineering disciplines in the design and technical operation of a petroleum refinery. Technical disciplines represented within the team were process, environmental, mechanical, electrical, and instrumentation engineering.

The steps for acquisition of data for preparation of this evaluation report were divided into three stages:

First, there was a preliminary, or reconnaissance visit to Poland during which a rather detailed questionnaire was furnished to the Plock refinery representative.

The second step was assembly in Chicago of the DMC team together with the host country consultants for a week of orientation. Unfortunately due to a visa problem, the Polish consultants were not able to participate in this meeting.

At the conclusion of the meeting, the team departed Chicago arriving at the Plock site of the Mazovian refinery - the largest refinery in Poland on May 20, 1991.

The third stage of the evaluation and audit effort consisted of data collection through meetings with operating managers and engineers of selected process units within the refinery.

During these visits, host country consultants were engaged to participate and provide technical assistance for in-country phases of the work. In addition to such technical assistance, the consultants were able to provide customs and language interpretation to insure mutual understanding of the material presented. Communication was facilitated by multi-language fluency within the DMC team.

The Mazovian Refinery and Petrochemical Works (MZRiP) at Plock is the largest of the oil refining and petrochemical plants in Poland. MZRiP, the state enterprise controlled by the Polish Ministry of Industry, was established in 1959. The complex is located in the center of Poland near Plock on the Vistula River, about 120 kilometers northwest of Warsaw. The petrochemical portion of the complex is not covered in this review.

The construction of the Mazovian refining and petrochemical complex began in 1960, and the first refinery products were obtained in 1964. This new complex was designed to meet rapidly increasing demand for fuels, oils, and raw materials for developing a modern chemical industry. Intensive development of the Mazovian refinery was continued in several phases until the early 1980's by successive construction and commissioning of new process and auxiliary units.

The petroleum refining industry in Poland as in the other Eastern European countries have been predominantly based on a single source of crude oil from the USSR.

The crude oil in the past was supplied at relatively fixed and stable low term prices. Hard currency was not an issue. Products were produced for the domestic market. The primary performance criteria was to satisfy the domestic market with cost a very secondary consideration. A monopoly distribution and marketing network was built for gasoline diesel and fuel oils. The retail prices were fixed by the state.

Beginning in 1991 supplies of crude oil from the USSR were at international prices payable in convertible currencies. At times the USSR reduced their deliveries up to 50% of contractual obligations.

The refinery is currently capable of processing 12 600 million tonnes (290 000 BPSD) of Russian export blend crude oil.

The ability of the Mazovian refinery to receive crude oil from the USSR by pipeline or to receive international crudes such as the North Sea, Middle east, etc. by pipeline from the Baltic port of Gdansk insures a crude supply to the refinery, but is limited by commercial and political considerations. The crude charged to the refinery during the last 12 months has been entirely USSR Romashkino crude of 32.5 °API. The crude has a sulfur content of 1.4 weight percent.

Crude is pumped from the USSR to Adamow base located on the Poland-USSR border. Storage capacity of the Adamow base is 600 000 cubic meters (517 000 tonnes). From the Adamow base, crude is pumped into refinery storage and to the Plebanka distribution base near Plock with a capacity of 630 000 cubic meters (543 000 tonnes) plus 200 000 cubic meters (172 000 tonnes) available after restoration of tankage. The present crude receipt and storage system is obsolete, cumbersome and susceptible to errors and should be modernized.

The process evaluation consisted of a meeting with the refinery manager and selected process unit managers for an initial process flow diagram review. When needed, a transiator was included at each meeting. Refinery mechanical and instrument engineers often joined the review to reduce the time required by operations personnel and to minimize repetition of inquiries by the DMC Team.

The review sessions were usually followed by visits to process units. The DMC team directly observed all equipment items and checked operational parameters such as temperature, pressure, and operating unit performance.

The Mazovian Refinery has an elaborate computer system whose inputs cover the facilities' technical and economic variables. The computer system was a substantial aid to the Davy McKee Evaluation Team in determining which systems and individual process units have the most potential for improvement.

A series of preliminary computer simulations of the Mazovian Refinery crude tower were performed in order to analyze operations. The report covering this activity is included in Appendix F, with resulting recommendations shown in Section C.2.6. The simulation shows reasonably close relationship with a refinery provided test run. There is indication that excessive heat is rejected in the bottom pump-around circuits. It also appears that through an increase in the temperature of the flash zone, that more gas oil could be recovered. additionally, a change to an overhead pump-around instead of reflux should be envisioned as an energy savings means.

The major processing units in the Mazovian Refinery consist of the following:

- atmospheric/vacuum distillation
- reforming and hydrotreating facilities for light and medium distillates
- fluid catalytic cracking
- lube oil production.

The overall operations are complex due to the development of four trains of distillation, hydrotreatment, and reforming as the refinery grew. This is further complicated by the large portion of intermediate products that are diverted to petrochemical feedstocks for aromatic and olefin production. In addition, the power plant not only provides for the needs of the refining and petrochemical plants, but is also used to generate electricity for the National Grid during the winter, and to provide district heating for the town of Plock.

This evaluation report presents recommended additions or modifications to the refinery with the potential for achieving significant energy improvements. The presentation includes, in most cases, the capital costs and expected savings justifying the expenditures. Other recommendations presented are investigative and of a nature that might lead to a substantial return on investment.

A summary of these suggestions are as follows:

- Improve heat utilization efficiency, through improved insulation applications on piping valves and equipment, repair or replace the desalter water crude oil heat exchanger, keep flue gas analysis under close study to insure efficient combustion and study and consider replacement of obsolete and inefficient process heaters.

- Operational changes - For multiple units in the same service, consider running only one at reduced capacity to handle demand based load changes and base load the remaining units. Also, rather than run at low throughput the reduced capacity unit should be shut down and then run at a high output to meet

demand. Consider isomerization of C_5/C_6 utilizing the existing catalytic reformer after completion of the continuous catalytic reformer now under construction. Improve on-stream time to reduce maintenance costs through use of corrosion resistant material in the Ljungstrom air preheaters. Consider addition of a visbreaker for the vacuum residue.

- Operating efficiency improvement - Study use of variable speed drives on high head pumps; install a turbine expander in FCC II unit. Limit lube quality fractionation to a single crude unit. Provide more gas to crude preheat exchanger train to detect early fouling before energy losses become excessive. Provide for on-stream cleaning of critical exchangers. Replace vacuum tower team ejectors with vacuum pumps to provide better efficiencies and more vacuum. Provide modern automatic controls for furnace firing utilizing "in-situ" oxygen analyzers and advanced controls to minimize excess air and fuel.

- Acquisition of software - Software for simulation of refining processes, linear programming for economical optimization of refinery operations for various crude supplies and product slates and a data base management system for inventory and historical maintenance record keeping is recommended.

Environmental improvement opportunities are also divided into immediate, medium term and long term categories and are presented in Section K of this report. These recommended environmental improvements are presented in a manner similar to the energy improvement opportunities.

A summary of the suggested environmental improvements is as follows:

- Reduction of oil discharge in waste water streams through improvement in desalter operation, better control of the waste water treatment plant, improve oil recovery from waste water, and installation of shallow ground water extraction wells to recover oil and to reduce groundwater contamination. Monitor and reduce oil leakage into the cooling water and condensate.

- Reduce volatile organic chemical (VOC) emissions to the atmosphere through management of inter-unit hydrocarbon transfer and tank farm operations. Acquire a portable VOC analyzer for on-site monitoring of emissions and replace the existing lagoon oil system with an API separator(s).

- Consider flue gas desulfurization to reduce sulfur dioxide emissions.

Except for air quality, the refinery is meeting most of the environmental regulations currently in effect in Poland which are not as stringent as those in Western Europe or the U.S. Based on its 11 000 000 tonne yearly throughput the refinery's total sulphur loss is 165 000 tonnes per year, 57 000 tonnes per year to air and water and 108 000 tonnes per year in the product shipped.

There is a serious deterioration of the natural environment in Poland. It should be noted however, that the refineries are not the only or even the major contributors to the country's emission problem. That is, emissions from coal burning greatly overshadow refinery emissions.

As concern for the environment grows and wastewater regulations become more severe, additional treatment will be required for the effluent water. In a similar way, equipment will be required for reduction of oxides of sulfur and nitrogen discharged into the atmosphere. Some of the refineries have already started planning for the replacement of old plants with new units and environmentally acceptable facilities. The sulfur plant in the refinery is a two-stage Claus type achieving about 95% sulfur recovery. A third stage or tail gas treatment unit is required to achieve about 99% sulfur recovery and thus reduce sulfur discharged to atmosphere from this source to acceptable levels. Some liquid and solid waste problems are being addressed.

Tetraethyl lead is still used as an octane booster in most of the gasoline produced as the majority of the cars in the country are manufactured to operate on leaded gasoline. A small amount of unleaded gasoline is currently produced for imported cars and tourists. Most Western European countries provide mainly unleaded gasoline for cars, and a small amount of leaded gasoline for older cars and farm machinery. As the Polish gasoline market approaches the standards and practices of Western Europe, refinery changes toward higher octane levels and the substitution of MTBE for lead can be anticipated.

The diesel fuel produced currently contains a maximum of 0.15 wt% sulfur. Eventually, the accepted worldwide sulfur content of diesel fuel all over the world is expected to be below 0.05 wt%. In addition, the aromatic content of both gasoline and diesel fuel products will have to be reduced to meet expected regulations and specification for sale.

The domestic fuel oil market uses fuel oil which contains 3 wt% sulfur with other characteristics similar to ASTM No. 6.

The sulfur content of these fuel oils is much higher than fuel oils normally used in the U.S. As environmental regulations mandate lower sulfur specifications, significant additional hydrosulfurization capacity will be needed for both diesel and fuel oils.

The refinery's power plant utilizes as fuel a portion of the heavy sulphur laden crude bottoms product. In addition to supplying the steam and electrical needs of the refinery and petrochemical palnt, it also generates electricity for the National Grid and supplies district heating to the town of Plock.

At this time the potential for coal use is extremely low. Refinery fuel fired equipment can easily use natural gas or fuel oil. Modification for coal use in Plock would require major capital investment that is unlikely to occur.

High sulfur fuel oil is a product that does not have much demand, especially in the summer. Its use as a refinery fuel however, is a convenient way to utilize the material. Switching existing fuel oil furnaces to coal would present an over supply of fuel oil. The availability and current price of natural gas coupled with a high capital investment required to utilize coal leads to the observation that new coal burning facilities are not an attractive alternative for the Polish refineries.

It should also be noted that new coal burning facilities in Poland would not be allowed by environmental authorities, unless their desulfurization and particulate removal are especially efficient.

In order to meet future demands for gasoline and other fuels with specifications more in line with those found in Western countries, the facilities at Plock will be forced to make changes to its refinery. Converting to unleaded motor fuel will require a higher pool octane. Typical processing units required to achieve higher octane are: Catalytic reformer, alkylation, fluid catalytic cracking, isomerization, and dehydrogeneration. Increased capacity for the additive MTBE or TAME will also be required.

The management of the Mazovian refinery is well ware of the need for benefits and general features/aspects of energy saving programs. Several of these are in place and operating. However, the implementation of these programs is obstructed by the shortage of financial means and a different order of priorities resulting from goals set by top management. For example, process furnace efficiency can be significantly improved and the project made economically viable by installing an air preheater and more effectively controlling excess air to the burners. Plans for the installation of air preheater on major furnaces together with automatic excess air control have been under annual review during the past several years.

A different type of potential for energy saving, which also has a very definite environmental benefit, may be found in a program to install a secondary sealing system for floating roof type storage tanks. Here the energy loss represented by product loss in venting to atmosphere can be equated to the energy consumed in its production. Conservation of weathered crude components can contribute to refinery output at relatively low specific energy input.

The Mazovian Refinery and Petrochemical Complex were designed to process crude oil for the USSR and will have varying problems when running other crudes. The age of the equipment is some process units is such that they will have to be evaluated technologically and economically with respect to practices at modern refineries in the West. Adaptation to competitive markets and a changed social structure reinforce the necessity for this evaluation.

The physical condition of the refineries' equipment, plus an absence of mechanical standards, require a large inventory of spare parts to assure continuous operation. Adequate parts inventory has not always been possible due to the financial requirements of inventory management so that on-stream time suffers.

Process control strategy and instrumentation can be modernized with the incorporation of advance control concepts and distributed control systems.

The potential future economic burden of large maintenance and operating staffs caused by factors previously noted could put the refinery at a disadvantage with its Western counterparts. National Social programs as they may affect labor practices and thus cost needs to be watched closely.

It is to the advantage of each refinery to study and improve safety practices.

In a time of hard currency shortages for the purchase of crude oil on the open crude oil market, additional storage capacity should be made available to take advantage of attractive spot prices. Suitable instrumentation and equipment is also required for accurate accounting and conservation of material during custody transfer and storage.

Acquisition of alternative crude feedstocks will require consideration of their effects on processing units and ancillary facilities. Considerations of effects on capacity; ability to supply the quantity and quality of petrochemical feedstocks required; and the ability to satisfy product specification, corrosion protection and removal of unwanted components are typical.

It is the opinion of the DMC team, that excellent opportunities exist to reduce the very high present day operating cost by reducing energy use. Management and operating personnel need to focus on these very fruitful areas. Other than the cost of crude, energy is the overwhelming main refinery cost. In modern U.S. refineries, energy costs are about 70% of the non-crude costs. Also economically, energy savings translate directly in hard currency savings.

It may be expected that environmental regulations will become ever more stringent. Unleaded gasoline, fuel aromatics reduction, low sulfur fuel oils and control of oxides of sulfur and nitrogen in atmospheric emissions are four examples that will need immediate attention.

A. INTRODUCTION AND EXECUTIVE SUMMARY

ACKNOWLEDGEMENTS

The Davy McKee Evaluation Team would like to express its gratitude to the management and staff of the Mazovian Refinery for their excellent cooperation and assistance. Special thanks are due also to the following individuals and their staffs.

Aleksander Puchowicz	Development Director
Romuald Truszczynski	Deputy Manager Engineering Office
Wojciech Zieleniewski	Chief Technologist Refinery Processes

1. OBJECTIVES

The objective of this report is to present opportunities for energy improvement and the reduction of emissions for the Mazovian refinery in Plock, Poland. Other defined and specified goals of the study include a consideration of refinery operating flexibility, an evaluation of fuel switching including the use of coal as a substitute for energy supply, and an observation of the plants general condition and of their maintenance practices with their effect on operations. A further objective is to characterize the modifications for achieving expected benefits in accordance with the magnitude of the effort and the capital requirements anticipated. The Terms of Reference or scope of work as defined by USAID can be found in Appendix B.

A summary of the stated USAID objectives of this study is as follows:

- To identify changes in operating practices and low-cost modifications to equipment that can be immediately implemented to increase the efficiency of energy utilization, to conserve energy by avoiding unjustified use, and to reduce as far as practical undesirable gaseous, liquid, and solid effluents.

- To identify, characterize, and recommend more-extensive changes in practices and equipment and modifications to the process units, which appear justifiable but at the same time require further study possibly with inputs that may not yet be available.

- To assist the management of each refinery selected in each country, as needed, in the implementation of the changes identified above through on-the-spot assistance (including training sessions for refinery personnel).

This report details the results of the Evaluation & Audit Study. The recommendations of this study to improve energy utilization operations (yields, practices, etc.) and environmental conditions are categorized as follows:

1. Immediate minimum cost recommendations: This category covers no cost to low cost modifications to the refinery that will be relatively inexpensive and easy to implement with its internal resources.

2. Short term intermediate cost recommendations: This category includes modifications and/or additions to the refinery that will be characterized by costs related to equipment purchases, and/or changes to process operating conditions that could be considered significant. Implementation would normally require outside resources and appropriate justification.

3. Long term substantial cost recommendations: This category characterizes primarily by significant modifications to current processing capabilities, or installation of additional process units to improve the refiner's competitive refining position into the 21st century. Implementation of this type of recommendation would be potentially expensive and time consuming. Implementation would require outside resources and a justification.

2. REFINERY SELECTION

The Mazowieckie Zaklady Refineryjne i Petrochemiczne (MZRIP- Mazovian Refinery and Petrochemical Works) at Plock near the Vistula River is the largest oil refining and petrochemical plant in Poland. It is, therefore, a logical candidate for this evaluation review. In this report the refinery will be referred to as the Mazovian Refinery. The petrochemical plant part of the complex is not covered in this review.

A map of Poland, on the first page of this report, shows the geographical location of the Mazovian Refinery.

10

The Mazovian Refinery has an elaborate computer system that inputs covers the facilities' technical and economic variables. The computer systems was a substantial aid to the Davy McKee Evaluation Team in determining which systems and individual process units have the most potential for improvement.

3. SUMMARY OF FIELD ACTIVITIES

The Davy McKee Corporation (DMC) evaluation of the Mazovian Refinery took place over a two-week period from 20 May to 4 June 1991. The evaluation team consisted of: T. Raslawski, Electrical; A. Steinhaus, Instrumentation; N. Roberts, Mechanical; Andrzej Lason, a Polish consultant who provided translation and technical services; W. Holve, Refinery Process Engineer; C. Best, Environmental Engineer, and A. Walinski, Project Manager.

Each major processing group in the refining portion of the complex and the power plant was reviewed. The attached Mazovian Refinery Block Flow Diagram, Figure No. 1 represents two of the four atmospheric distillation trains.

The process evaluation consisted of a meeting with the refinery manager and selected process unit managers for an initial process flow diagram review. When needed, a translator was included at each meeting. Refinery mechanical and instrument engineers often joined the review to reduce the time required by operations personnel and to minimize repetition of inquiries by the DMC Team.

The success of individual contacts was strongly influenced by the personality of the interviewee and the translator, especially with respect to the level of communication. Furthermore, it should be appreciated that different contacts can give conflicting replies to the same query due to a degree of misinterpretation in dual language communications. However, the DMC team received total cooperation from individual refinery staff members. The refinery staff responded immediately to answer inquiries, when possible, or obtained answers from others where necessary.

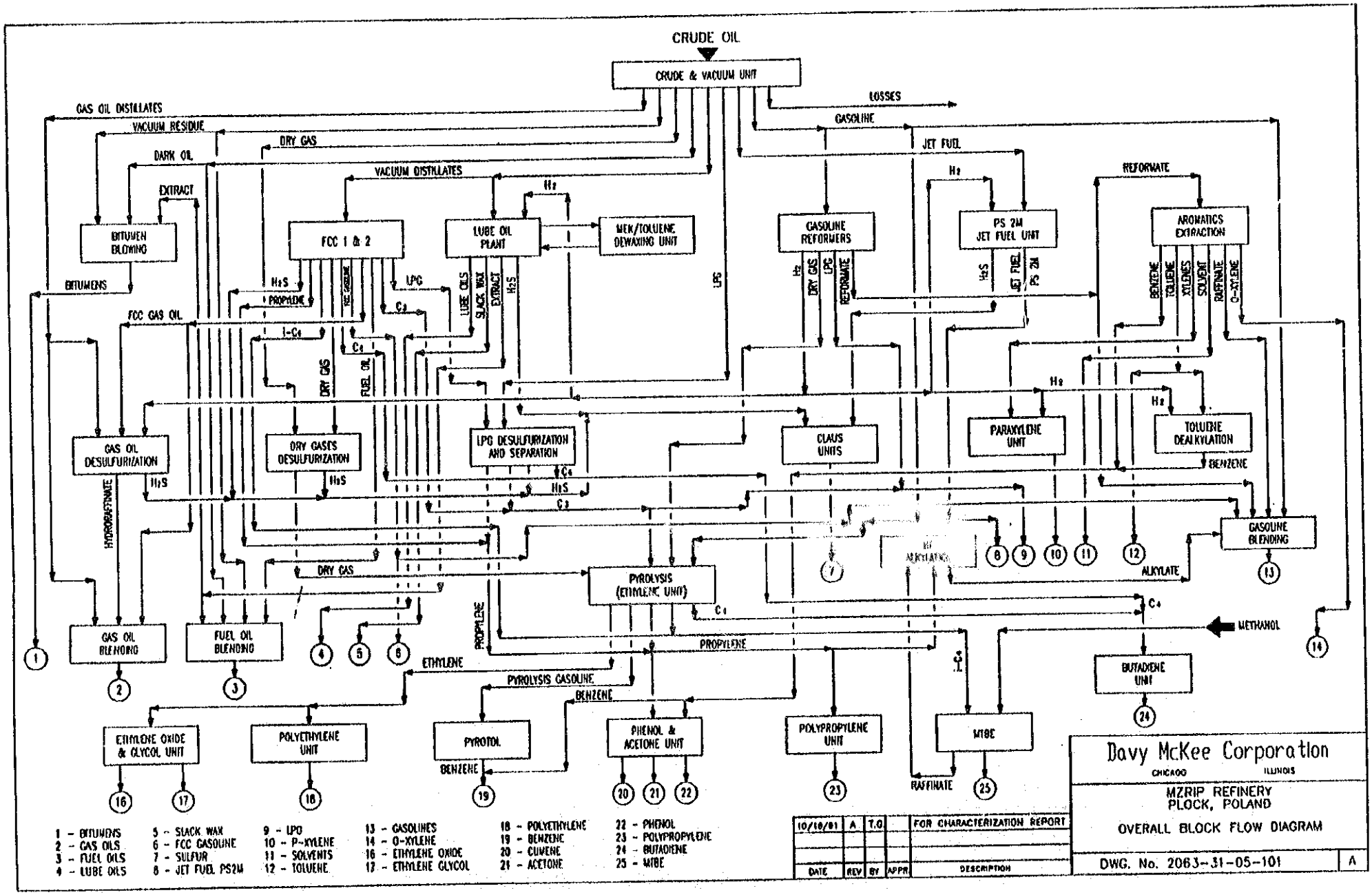
CRUDE OIL
CRUDE & VACUUM UNIT
LOSSES
GAS OIL DISTILLATES
VACUUM RESIDUE
DRY GAS
DARK OIL
VACUUM DISTILLATES
EXTRACT
GASOLINE
JET FUEL
REFORMATE
BITUMEN BLOWING
FCC 1 & 2
LUBE OIL PLANT
MEK/TOLUENE DEWAXING UNIT
GASOLINE REFORMERS
PS 2M JET FUEL UNIT
AROMATICS EXTRACTION
BITUMENS
FCC GAS OIL
GAS OIL DESULFURIZATION
DRY GASES DESULFURIZATION
LPG DESULFURIZATION AND SEPARATION
CLAUS UNITS
PARAXYLENE UNIT
TOLUENE DEALKYLATION
BENZENE
GASOLINE BLENDING
ALKYLATE
PYROLYSIS (ETHYLENE UNIT)
METHANOL
GAS OIL BLENDING
FUEL OIL BLENDING
ETHYLENE
PROPYLENE
PYROLYSIS GASOLINE
BUTADIENE UNIT
ETHYLENE OXIDE & GLYCOL UNIT
POLYETHYLENE UNIT
PYROTOL
PHENOL & ACETONE UNIT
POLYPROPYLENE UNIT
MTBE
RAFFINATE
1 - BITUMENS
2 - GAS OILS
3 - FUEL OILS
4 - LUBE OILS
5 - SLACK WAX
6 - FCC GASOLINE
7 - SULFUR
8 - JET FUEL PS2M
9 - LPG
10 - P-XYLENE
11 - SOLVENTS
12 - TOLUENE
13 - GASOLINES
14 - O-XYLENE
16 - ETHYLENE OXIDE
17 - ETHYLENE GLYCOL
18 - POLYETHYLENE
19 - BENZENE
20 - CUMENE
21 - ACETONE
22 - PHENOL
23 - POLYPROPYLENE
24 - BUTADIENE
25 - MTBE
10/10/81 A T.O FOR CHARACTERIZATION REPORT
DATE REV BY APPR DESCRIPTION
Davy McKee Corporation
CHICAGO ILLINOIS
MZRIP REFINERY
PLOCK, POLAND
OVERALL BLOCK FLOW DIAGRAM
DWG. No. 2063-31-05-101 A

Figure 1

A series of preliminary computer simulations of the Mazovian Refinery crude tower were performed in order to analyze operations. The report covering this activity is included in Appendix F, with resulting recommendations shown in Section C.2.6. The simulation shows reasonably close relationship with a refinery provided test run. There is indication that excessive heat is rejected in the bottom pump-around circuits. It also appears that through an increase in the temperature of the flash zone, that more gas oil could be recovered. Additionally, a change to an overhead pump-around instead of reflux should be envisioned as an energy savings means.

The review sessions were usually followed by unit visits. The DMC team directly observed all equipment items and checked operational parameters such as temperature, pressure, and performance.

4. REFINERY DESCRIPTION

The refinery capacity totals 12 600 000 tonnes/year. The crude is supplied through the "Friendship" pipeline serving the COMECON countries.

The major processing units in the Mazovian Refinery consist of:

- atmospheric/vacuum distillation
- reforming and hydrotreating facilities for light and medium distillates
- fluid catalytic cracking
- lube production.

The overall operations are complex due to the development of four trains of distillation, hydrotreatment, and reforming as the refinery grew. This is further complicated by the large portion of intermediate products that are diverted to petrochemical feedstocks for aromatic and olefin production. In addition, the power plant not only provides for the needs of the refining and petrochemical plants, but is also used to generate electricity for the National Grid during the winter, and to provide district heating for the town of Plock.

Block Flow Diagram, Figure No. 1, shows the relationship among refinery operating units.

5. TYPES OF ENERGY IMPROVEMENT OPPORTUNITIES

Section J of this evaluation report presents recommended additions or modifications to the refinery with the potential for achieving significant energy improvements. The presentation includes, in most cases, the capital costs and expected savings justifying the expenditures according to the three categories above. Other recommendations are investigative and of a nature that might lead to a substantial return on investment.

A summary of these suggestions are as follows:

- Improve heat utilization efficiency, through improved insulation applications on piping valves and equipment, repair or replace the desalter water/crude oil heat exchanger, keep flue gas analysis under close study to insure efficient combustion and study and consider replacement of obsolete and inefficient process heaters.

- Operational changes - For multiple units in the same service, consider running only one at full capacity rather than reduced capacity on several units. Consider isomerization C_5/C_6 utilizing the existing catalytic reformer after completion of the continuous catalytic reformer now under construction. Improve on-stream time to reduce maintenance costs through use of corrosion resistant material in the Ljungstrom air preheaters. Consider addition of a visbreaker for the vacuum residue.

- Operating efficiency improvements - Study use of variable speed drives on high head pumps; install a turbine expander in FCC II unit.

- Acquisition of software - Software for simulation of refining processes, linear programming for economical optimization of refinery operations and a data base management system for inventory and historical maintenance record keeping is recommended.

14

6. TYPES OF ENVIRONMENTAL EMISSIONS IMPROVEMENTS

Environmental improvement opportunities are also divided into immediate, medium term and long term categories and are presented in Section K of this report. These recommended environmental improvements are presented in a manner similar to the energy improvement opportunities presented in Section J. The environmental improvements, in addition to improving emission abatement, sometimes are also economically justifiable.

A summary of the suggested environmental improvements is as follows:

- Reduction of oil discharge in waste water streams through improvement in desalter operation, better control of the waste water treatment plant, improve oil recovery from waste water, and installation of shallow ground water extraction wells to recover oil and to stop groundwater contamination.

- Reduce volatile organic chemical (VOC) emissions to the atmosphere through management of inter-unit hydrocarbon transfer and tank farm operations. Acquire a portable VOC analyzer for on-site monitoring of emissions and replace the existing lagoon oil system with an API separator(s).

- Consider flue gas desulfurization to reduce sulfur dioxide emissions.

B. REFINERY ENERGY BALANCE

1. OPERATING UNIT ENERGY USE

The Mazovian Refinery Technical Services Group recently completed an extensive and impressive spreadsheet model of the Mazovian complex's operations. This model is installed on an IBM[R] PC compatible computer, an IPG PS/2. The model is quite elegant and sophisticated in accommodating the major technical and economic variables of the existing fifty two refinery units as well as projected future plants in the complex. Yields, blending specifications, specific utilities consumptions, costs of feeds, utilities, catalysts and chemicals, product values, and taxes are considered by the program. Thus, the program permits sensitivity and investment feasibility studies.

Using the 1991 projected model, operating performance was assessed for the refining units and are shown in Table B.1.1 and B.1.2. The results indicate that the Mazovian Refinery operations will consume about 7.8% more energy than obtained in typical U.S. operations during the 1980s. In particular, the catalytic cracking units appear to consume more energy than indicated by U.S. experience. Since the 1991 Mazovian data is compared to U.S. results during the 1980s, a more definitive analysis should be undertaken to compare energy use on an equivalent basis.

Recent studies on continuing energy efficiency efforts in the U.S. show approximately a 1 to 2% per year efficiency improvement over the past 5 years. On this basis, a further 5% to 7% decrease in energy demand at Mazovian should be expected and could be realistically used as a goal.

The data and evaluation procedures supporting the potential energy improvements for the Mazovian Refinery are included in Appendix E.

The reliability and accuracy of the utilities consumptions presented by refinery personnel were accepted by the DMC team without independent verification of the data. In the future, Mazovian management must ensure that operational data used reflects the actual operating performance so that corrective action can be instituted whenever needed.

16

The original Mazovian units are of Russian design. The DMC team noted unusually complex crude preheat exchange trains combined with a relatively low crude tower flash temperature. These observations prompted the team to consider the simulation of this distillation combined with an independent review of the heat exchange network to assess the possibilities for improvements.

The original 1964 distillation unit heaters operate at low efficiencies (approximately 65%), but these units are being progressively improved through an on-going revamp program.

TABLE B.1.1 - ENERGY EFFICIENCY COMPARISON

UNIT	CAPACITY TONNE/YR	FUEL KCAL/T	SPECIFIC ENERGY DEMANDS			TOTAL ENERGY DEMAND			US SPECIFIC ENERGY DEMAND	
			STEAM KG/T	ELEC KWH/T	CW M3/T	KCAL/T	GCAL/YR	%	KCAL/T	GCAL/YR
ATM/VACUUM										
I	2 077 000	180 380	56.0	4.8	8.0	235 900	490.0	7.9		
II	2 970 059	181 316	74.0	5.9	6.5	251 176	746.0	12.1		
III	2 801 517	210 030	120.0	6.0	7.5	312 930	876.7	14.2		
IV	2 151 424	205 580	139.0	8.2	7.5	327 060	703.65	11.4		
TOTAL	10 000					281 630	2 816.3	45.6	305 000	3 050.0
HYDROTREATER/PLATFORMER										
I	279 900	769 800	148.1	42.0	25.0	989 270	276.9	4.5		
II	195 000	769 000	148.1	41.0	25.0	986 870	192.4	3.1		
III	247 464	769 000	148.1	41.0	25.0	986 870	244.2	4.0		
IV	128 350	765 800	111.1	45.0	23.0	955 370	122.6	2.0		
TOTAL	850 704					982 907	836.2	13.5	950 000	808.2
GAS OIL HYDROTREATER										
JET	71 715	142 200	129.6	9.2	21.0	267 600	19.2	0.3		
GO I	1 466 101	60 970	55.6	14.0	14.0	141 890	208.0	3.4		
GO II	34 838	60 970	55.6	14.0	14.0	141 890	4.9	0.1		
GO III	(IN GO I)	60 970	55.6	14.0	14.0	141 890	0.0	0.0		
TOTAL	1 572 563					147 623	232.1	3.8	215 000	338.1
HF ALKYLATION	73 253	385 680	129.6	41.0	116.0	644 400	47.2	0.8	750 000	54.9
FLUID CAT CRACKING										
I	354 055	601 930	55.6	62.0	32.0	808 850	286.4	4.6		
II	1 465 054	808 770	74.1	28.0	17.0	938 040	1 374.3	22.2		
TOTAL	1 819 109					912 896	1 660.7	26.9	580 000	1 055.1
BLENDING										
GASOLINE	1 579 917	0	18.5	1.0	0.0	15 350	24.3	0.4		
JET	140 000	0	18.5	0.0	0.0	12 950	1.8	0.0		
DIESEL	3 391 295	0	40.7	0.5	0.0	29 690	100.7	1.6		
FUEL OIL	1 745 281	0	42.6	1.0	0.0	32 220	56.2	0.9		
TOTAL	6 856 493					26 688	183.0	3.0	20 000	137.1
SULFUR PLANT	27 763	1 397 000	-5 181	68.0	0.0	-2 066 500	-57.4	-0.9	-1 000	-27.8
TOTAL FUELS	21 199 885						5 718.1	92.5		5 415.7

TABLE B.1.2 - ENERGY EFFICIENCY COMPARISON

UNIT	CAPACITY MT/YR	FUEL KCAL/T	SPECIFIC ENERGY DEMANDS			TOTAL ENERGY DEMAND			US SPECIFIC ENERGY DEMAND	
			STEAM KG/T	ELEC KWH/T	CW M3/T	KCAL/T	GCAL/YR	%	KCAL/T	GCAL/YR
ROM FIG P1: TOTAL FUELS REFINERY OPN'S							5718.1	92.5		5415.7
CRUDE FEED										
W% OF CRUDE @ 9 740 000 KCAL/TONNE (FOE) =							5.87			5.56
NOTE:	945312 TONNES NAPHTHA TO PETROCHEMICALS									
	679559 TONES REFORMATE TO PETROCHEMICALS									
LUBE OPERATIONS										
FURFURAL	272550	453860	333.3	20.0	30.0	753170	205.3	3.3	525000	143.1
DEWAXING	154273	0	1463	110.0	49.0	1317500	203.3	3.3	950000	146.6
H'FINISHING	123117	152400	148.1	8.5	25.0	291470	35.9	0.6	200000	24.6
BLENDING	122140	0	222.2	0.13	0	155852	19.0	0.3	30000	3.7
TOTAL LUBES	672080					689578	463.5	7.5	473062	317.9
W% OF CRUDE @ 9 740 000 KCAL/TONNE (FOE) =							0.48			0.32
COMPLETE REFINERY OPERATIONS							6181.5	100.0		5733.6
W% OF CRUDE @ 9 740 000 KCAL/TONNE (FOE) =							6.35			5.89
ENERY REQ'T - BTU/BBL CRUDE FEED @ 6 000 BTU/BBL (FOE) =							380792.4			353199

2. FUEL SYSTEMS

2.1 Fuel Sources

Power plant fuel source

The fuel for the power plant is produced primarily from heavy vacuum bottoms which is high in both metals and sulfur content. Fuel oil as burned in the refinery is reported to contain 2.6 to 3.2 weight percent sulfur. The first priority of fuel management is to purchase crude that has a low enough sulfur content to yield 0.015% sulfur in the flue gas to meet 1998 combustion exhaust gas requirements. If this option cannot be realized, then heavy residual fuels can be blended with hydrotreated gas oil or diesel fuel to diminish the sulfur in the flue gas to an acceptable tolerance.

Tables B.2.1 and B.2.2, below, show typical fuel gas blending practices and fuel characteristics.

TABLE B.2.1 - TYPICAL FUEL GAS BLENDING

Component	Wt%
Hydrogen Gas	3.90
Sour H_2 Gas	0.62
Sour Dry H_2 Gas	2.48
Fuel Gas from Various Units	79.27

TABLE B.2.2 - FUEL CHARACTERISTICS

Fuel	Heating Value (Kcal/kg)	Sulfur Content (wt%)
Fuel Oil	9600 - 9800	2.6 - 3.2
Fuel Gas	11500 - 12200	0.1 - 0.2

Previous studies by Bipronaft Consulting Engineering Firm of Krakow considered coal as a fuel source for power plant. However, these studies were not pursued to determine the payout or feasibility of using coal. Refer to section H.3 for additional comments on the use of coal as a fuel.

10

Process heater fuel source

The fuel for process heaters is from the same blend of vacuum bottoms and hydrotreated gas oil as the power plant and from gaseous fuel separated in light ends distillation, cracking, and reforming and blended into the plant fuel gas system.

2.2 Fuel Distribution

Power plant fuel distribution

The liquid fuel is heated to approximately 180 - 190°C using low pressure steam to reduce viscosity and aid in atomization for efficient burning. The heated fuel is controlled and distributed to the steam atomizing nozzles in each power boiler.

Process heater fuel distribution

The heated and blended fuel is pumped in insulated lines to the process areas for steam-atomization at the heater burners.

Gaseous fuel is piped to a fuel gas scrubber and then piped into the plant fuel gas system. The hydrogen sulphide produced at the scrubber is sent to the Claus unit.

2.3 Fuel Users

The crude distillation units demand is a large portion of the fuel used in the refinery. The furnaces within the crude units use side fired Russian designed cabin heaters with atomizing dual fuel burners.

The power plant also uses a large portion of the fuel. The other process heaters consume the remaining portion of fired fuel. The Claus sulfur recovery unit uses gaseous fuel only.

3. STEAM SYSTEM

3.1 High pressure steam is supplied by three boilers that generate 320 tonnes/hour each and four boilers that generate 420 tonnes/hour each. Process utility steam is produced in three additional boilers and by a variety of waste heat boilers and process steam generators located at individual units.

21

3.2 The steam pressure levels generated at the Mazovian Refinery are:

13.5	MPa
7.5	MPa
4.5	MPa
3.5	MPa
1.7	MPa
0.7	MPa
0.3	MPa

3.3 High pressure steam is used for generating electricity and by large compressor turbines. Lower steam pressure levels are used for process heating, utility service, and stripping. The condensate return to the power house averages about 20% of the total refinery steam usage.

4.0 ELECTRIC POWER SYSTEM

4.1 Electricity Sources

The refinery receives electric power from two sources:

- the national power system from two dual 110 kV overhead lines from two independent sources through four transformers rated at 110/30 kV, 75 MVA each.
- the refinery central power station from five generators, manufactured in Czechoslovakia, each producing 55 MW at 10.5 kV.

4.2 Electric Distribution System

Four 30 kV main substations, of Polish manufacture, distribute power to eleven 30/6 kV double ended zone substations through two independent feeders. A third independent source of power from another substation is provided at each substation for critical equipment.

All feeders are three conductor, aluminum, underground (direct buried), and were made in Poland.

4.3 Electric Power Users

Table B.4.1 shows the electrical energy consumption for each process user for the period of May 1990 through April 1991. It contrasts budget or planned unit rates on a KWH per tonne of feed basis to actual values.

TABLE B.4.1 - ELECTRICAL ENERGY CONSUMPTION PER UNIT
MAY 1990 TO APRIL 1991

Unit Name	Planned Index (kWh/tonne)	Actual Consumption (kWh)	Average Actual (kWh/tonne)
Crude Atmos. & Vac. Dist. I	4.80	10 990 440	5.25
Crude Atmos. & Vac. Dist. II	5.90	20 945 424	5.79
Crude Atmos. & Vac. Dist. III	6.00	4 818 696	5.98
Crude Atmos. & Vac. Dist. IV	8.20	24 018 544	8.28
Crude Atmos. & Vac. Dist. V	12.00	170 132	11.07
Slop Oil Distillation	7.80	743 083	12.26
Diesel Oil Blending	0.50	2 176 814	0.70
Fuel Oil Blending	1.00	2 176 814	0.95
Furfural Blending	20.00	5 356 610	20.35
Jet Fuel (PSM-2) HDS	9.70	323 519	6.98
Acetone Benz. Dewaxing	110.00	13 168 028	109.01
Lube Oil Hydrofinishing	8.50	999 121	8.52
Bldg. & Disp. of Lube Oils	0.13	20 471	0.19
Asphalt Blow. in Oxide	5.00	642 016	4.60
Asphalt Blow. in Chambers	3.00	194 806	1.11
FCC I	62.00	15 880 864	60.00
FCC II	28.00	37 610 160	26.27
Alkylation	41.00	3 280 850	44.07
Gasoline Blending	1.00	810 013	0.56

TABLE B.4.1 - ELECTRICAL ENERGY CONSUMPTION PER UNIT - continued
MAY 1990 TO APRIL 1991

Unit Name	Planned Index (kWh/tonne)	Actual Consumption (kWh)	Average Actual (kWh/tonne)
CAT Reformer I	45.00	8 663 068	37.27
CAT Reformer II	41.00	6 868 761	40.21
CAT Reformer III	42.00	7 771 348	38.08
CAT Reformer IV	42.00	8 444 490	44.37
Gas Oil HDS I	14.00	4 744 772	9.99
Gas Oil HDS II	14.00	2 525 726	11.92
Gas Oil HDS III	14.00	5 628 212	12.88
Jet Fuel HDS I	18.00	—	—
Jet Fuel HDS II	18.00	1 365 003	18.28
Jet Fuel HDS III	18.00	—	—
Aromatic Extraction	30.00	10 463 601	27.86
P-xylene	800.00	20 500 286	1091.52

5.0 WATER COOLING SYSTEM

Cooling water is pumped from the Vistula River at a rate of 2600 cubic meters per hour and supplies both the boiler feed water and the cooling water demand.

The refinery and petrochemical complex use the same water treatment plant. The refinery cooling demand is about 400 cubic meters per hour. The petrochemical plant requires approximately the same amount.

5.1 Typical Cooling Tower

The cooling towers are typically made of concrete and use cement corrugated siding. There are 81 large fans, inducting 5 832 000 cubic meters per hour of air upward, for the four cooling towers. Each cooling tower block has a first stage pump that circulates 3400 cubic meters per hour. The second stage pump delivers the flow to the cooling system. A typical total circulation rate for the four cooling towers is approximately 30 000 cubic meters per hour.

The cooling water is circulated with 5 to 6 times the total dissolved solids content, compared to the treated make-up. Blow down is pumped to the petrochemical complex.

During the winter, water is distributed at a lower point in the towers. The fans are cycled off or run as the demand dictates. When the ambient temperature is below freezing an ice wall forms and insulates the cooling tower basin. There are no winter doors or closures nor variable or dual speed fan motors.

5.2 Water Treating

The water from the river is allowed to sediment and chemicals are used to accelerate clarification. The circulated cooling water is injected with chlorine and corrosion inhibitors. A biocide is dosed into the flow once a month to prevent algae growth.

The cooling water returned from the crude distillation units is run through the API separators to remove the slop oil. Approximately 20 cubic meters per day of slop oil and sludge is collected, decanted, and sent back to the distillation units. Chemicals are used to accelerate the oil separation.

5.3 New Cooling Tower Design

New towers were being assembled during June 1991. These towers will have louvers from the ground up and use plastic structured packing.

6. AIR COOLERS

6.1 Typical Air Cooler Design

The air coolers at the Mazovian Refinery have a fixed blade pitch, set by the manufacturer. The louvers are manually adjusted to achieve the desired process outlet temperature.

During the winter the fans are cycled as climatic conditions permit. There are no provision for skirts, fan speed adjustment, or fan reverse rotation. Fans are belt driven.

6.2 FCC Unit #2

Air coolers which are used to condense light ends have replaced water cooling units to reduce water usage.

7. ENERGY RECOVERY SYSTEMS

7.1 Power Plant

Combustion air preheaters are used on all boilers. Ljungstrom preheaters are used on nine boilers. These units display a better heat recovery rate than those used on the other building. However, the surface plates of the Ljungstrom units are sensitive to corrosion from the sulfur contained in the flue gas. Draft loss increases as the corrosion progresses.

Soot blowers are part of the boiler design, however the present system is not effective and is not utilized. Furthermore, soot blowing causes severe fouling of the Ljungstrom units.

The feed water heater and condensate return heat exchangers are used for energy recovery.

26

7.2 Fired Process Heaters

Early design heaters

The early design cabin type heaters have no provisions for energy recovery. The design uses side-fired burners spaced closely around the walls. Air leaks are so numerous that a bright flame is visible in many places in bright daylight. This results in high excess air rates. No provision for combustion air preheat exists or appears to be economically feasible.

The engineering staff at Mazovian has revamped the original design to provide approximately 6 tonnes/hour steam at 1.0 MPa. Superheat coils are available, but are not used. The coils are corroded and superheat steam can not be produced safely.

The engineering staff has scheduled the replacement of the cabin type heaters as soon as the refinery economics will allow.

Recent design heaters

The recently designed process heaters, used in the revamped distillation unit #3, do not have any provisions for energy recovery such as flue gas steam generation or air preheat. However, the design arrangement will accommodate these energy recovery systems with modification. The heaters are fired upward with dual fuel capability, steam atomizing oil burners. There are no apparent air leaks and each burner is equipped with a manual air damper. The breechings join into a single stack on top of the unit.

The Mazovian engineering staff is planning to add the following:

- oxygen analyzer-controller driving a servo positioner to automatically adjust the burner combustion air damper to achieve minimum excess air.
- air quality sensing and data logging capabilities.
- forced draft fans and combustion air preheaters.
- steam generator drums and water-tubes for 1.0 MPa steam production.

7.3 Other Energy Recovery Systems

A significant element to refinery energy efficiency is associated with material loss control. In the U.S., an accepted goal of good refinery practice is to contain losses to within the region of 0.5 weight percent. This figure represents unavoidable or unrecoverable losses sustained through process unit upsets, startup or shutdown flaring, leakage or spillage, and "Fugitive" emissions from tankage or vents. It is the refinery operations task to keep all these losses to a bare minimum consistent with the plant design and the condition of the equipment.

The comprehensive mass balance budget of the Mazovian complex for 1991 shows a loss value at 1.88 weight percent for the total installation of 52 refinery and petrochemical units. It is our belief that losses in the refinery section alone should be somewhat less than this figure and, if so, would reflect a reasonable control.

However, an incentive still exists to carefully identify with greater precision exactly where these losses occur with the aim of reducing loses, wherever feasible. At a processing rate of 10 000 000 tonnes/year, the incentive for a 1.0 weight percent reduction would save 100 000 tonnes/year of hydrocarbons which would be worth some $7 400 000 when nominally valued as fuel oil. It is,of course, possible that present mass balance accounting could be in error through the lack of suitably calibrated instrumentation. If so, such problems should be corrected. A substantial amount of effort and investment in further controls and instrumentation is possible for cost/benefit ratios of this magnitude.

Therefore, close attention and vigilance in operating practice combined with a longer term and more formalized material control procedures should be considered and implemented.

<u>Fluid catalytic cracking unit #2, designed by U.O.P.</u>

This unit has been modified by the Mazovian engineering staff to utilize a heat pump system to achieve 2°C propylene at 0.56 MPa. This unit also generates enough 4.0 MPa steam to drive its air compressor turbine. Demineralized feed water is supplied by the power station.

Platformer unit #1 heater

This unit, recently revamped by the Mazovian engineering staff, utilizes combustion air preheat, a waste heat boiler, gas fuel burners as well as steam atomized John Zink dual fuel burners. Excess oxygen in the flue gas indicates 2% and is manually set by an operator and indicated by an oxygen analyzer. The waste heat boiler operates at 190°C flue gas temperature.

The Mazovian engineering staff plans to use this heater as a prototype for modifying other process heaters in the refinery.

Alkylation unit heater

This unit has a steam generator for energy recovery. The exit stack typically operates at 230°C. There is no combustion air preheat or an oxygen analyzer in the flue gas.

Sulfur recovery muffle furnaces

The sulfur recovery muffle furnaces generate steam for energy recovery. A gas chromatograph sensor-controller sets the gas-to-air ratio for optimum process demand. The power plant furnishes treated feed water.

Steam generation rates are typically:

8 tonnes/hour at 0.7 MPa
4 tonnes/hour at 0.3 MPa

Asphalt blowing unit

The offgas from this unit is incinerated. The incinerator produces steam as an energy recovery means.

C. REFINERY FLEXIBILITY

1. OVERVIEW

The calendar year 1990 operating rate of the four crude distillation units was 9.6 million tonnes of crude oil. The combined design capacity of these units is 12.6 million tonnes per year. A fifth unit exists; however, it is not operational.

Actual 1990 operating rates have been lower than design capacity due to reduced market share as a result of western imports, primarily gasoline and diesel. In addition, the construction industry reduced asphalt purchases. Despite price reductions, fuel oil sales were down due to Polish State Railway strikes and reduced demands from the iron and steel industry. Lube oil base stock sales were also down.

Furthermore, the market prices of gasolines and diesel oils are officially fixed and the refinery cannot, at this time, reduce prices. Privatization and free market economics will, of course, change this practice assuming no government intervention.

The refinery's four crude processing unit ratings are: two at 3.6 million tonnes/year capacity; one rated at 3.0 million tonnes/year capacity; and one rated at 2.4 million tonnes/year capacity. This gives the refinery a considerable amount of operating flexibility with respect to fluctuations in crude supply or product demand. Additionally, the refinery has the capacity to process a wide range of crudes. The potential to process alternative crudes is an asset in light of reductions in USSR crude oil deliveries as experienced elsewhere in Eastern Europe. Refinery flexibility is further enhanced by the presence of other multiple units of the same type, specifically four reformers, three diesel oil production facilities, and two FCC units.

Evaluations of the operating Crude Unit II, Naphtha Hydrotreater/Platforming Unit I, and Fluid Catalytic Cracking Unit I are presented in more detail in the next sections.

2. CRUDE UNITS

The comments in this Section reflect evaluation and review of Crude Units I and II conducted by the DMC team. The units are essentially identical from a design viewpoint but differ in capacity rating. Unit I is rated at 2.4 million tonnes per year and Unit II is rated at 3.6 million tonnes per year.

2.1. Process Flow Diagram

The process flow diagram is shown in Figure No. 2.

2.2. Feedstock

Only USSR Romashinko export crude (32.5°API, 1.4 wt% sulfur) is processed in accordance with the original design basis. Additional crude characteristics are shown in Appendix F. Deliveries from the USSR may become more restrictive or unstable due to more demanding commercial terms and uncertainties within the USSR petroleum industry. Therefore, alternative sources of crude must be found to assure continued operation at levels approaching the rated capacity.

Depending on the extent of decreased Romashinko crude supply, it is possible to still maintain adequate feed to the lube unit by diverting a portion of the Romashinko oil cuts (currently sent to the fuel oil pool) to the lube units. A new crude source could also yield feasible feed to the lube units. A wide range of crudes should be able to fit the Mazovian Refinery capabilities and match product quantity and quality needs. The acceptable ratio of new to existing crude, and an analysis of new crude oil intermediate-cut characteristics will need to be reviewed on an individual case basis.

2.3. Unit Flexibility

A change in crude feedstock would affect the volume distribution of intermediate products in accordance with the properties of the crude and in turn affect the vapor and liquid loadings within the crude fractionating towers. Related equipment, such as heat exchangers and pumps, may be similarly affected and require replacement or modification due to the increased or decreased volumes processed. Operational flexibility, consistent with tower vapor loading limitations and the selection of acceptable operating pressures, should not be a problem.

31

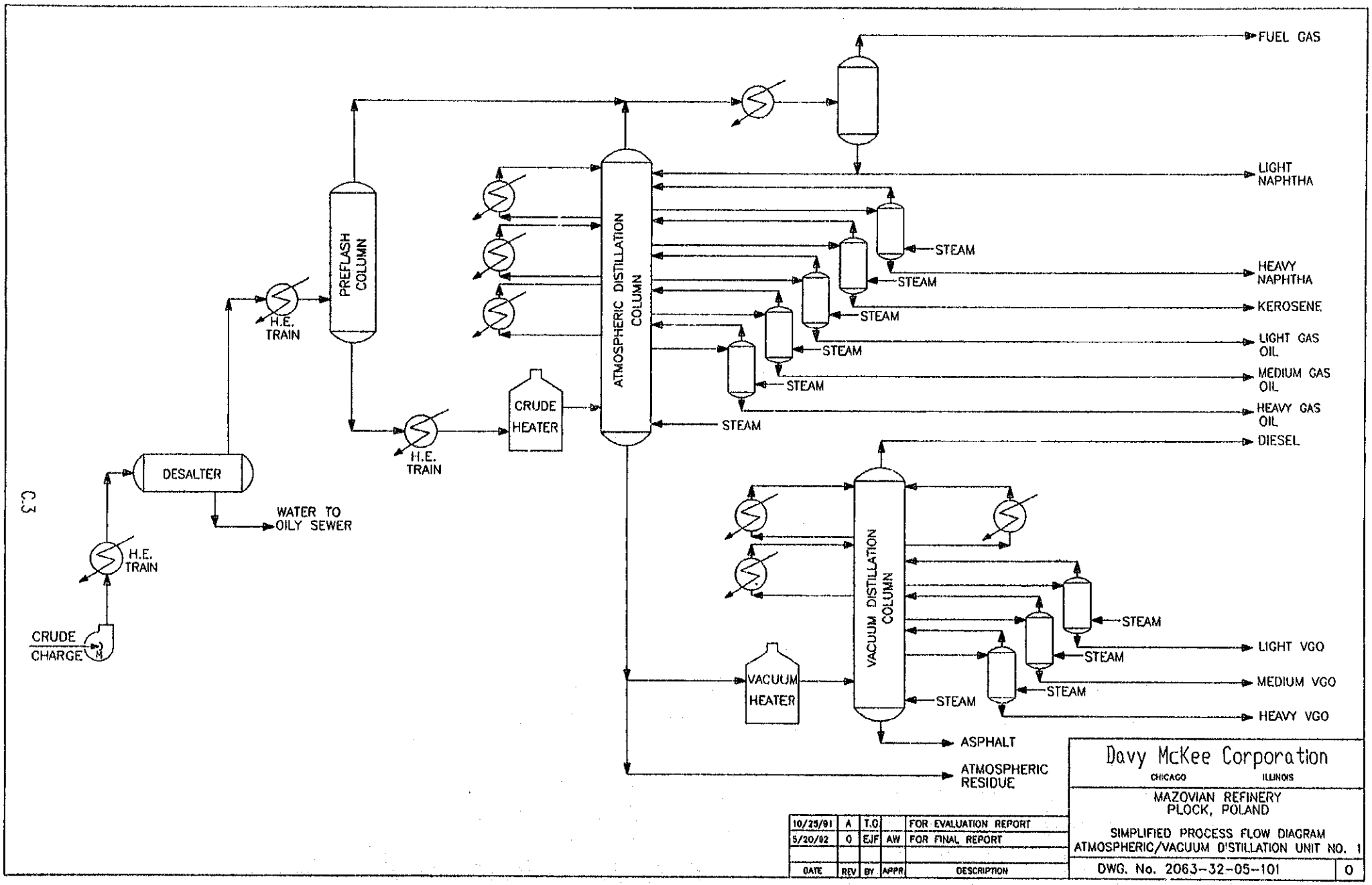
FUEL GAS
LIGHT NAPHTHA
HEAVY NAPHTHA
KEROSENE
LIGHT GAS OIL
MEDIUM GAS OIL
HEAVY GAS OIL
DIESEL
STEAM
ATMOSPHERIC DISTILLATION COLUMN
PREFLASH COLUMN
H.E. TRAIN
CRUDE HEATER
DESALTER
WATER TO OILY SEWER
CRUDE CHARGE
VACUUM DISTILLATION COLUMN
VACUUM HEATER
LIGHT VGO
MEDIUM VGO
HEAVY VGO
ASPHALT
ATMOSPHERIC RESIDUE
Davy McKee Corporation
CHICAGO ILLINOIS
MAZOVIAN REFINERY
PLOCK, POLAND
SIMPLIFIED PROCESS FLOW DIAGRAM
ATMOSPHERIC/VACUUM DISTILLATION UNIT NO. 1
DWG. No. 2063-32-05-101
0
10/25/91 A T.C FOR EVALUATION REPORT
5/20/92 0 EJF AW FOR FINAL REPORT
DATE REV BY APPR DESCRIPTION

FIGURE 2

Potential change in operations, due to a crude supply change, could be subjected to computer simulations for better performance evaluation particularly with respect to the crude preheat train and individual side-stream stripper loadings. Some potential bottlenecks or exchanger limitations could be anticipated and corrected in advance to ensure maximizing overall plant efficiency before making a change to the crude supply.

2.4. Operational Sensitivity

A wide variation in crude composition could be acceptable consistent with maximizing the total profitability of the overall refinery and petrochemical complex. As a considerable portion of the intermediate refinery streams are destined for aromatic and olefinic petrochemicals, it is imperative that appropriate linear programming (LP) procedures be applied to maximize operations and economic reform. In this regard, extensive use of the recently developed spreadsheet model is appreciated, but a refined LP software package would permit a more thorough study of refining variables such as crude selection fractionation cut-points, specification blending options, etc. This would provide an optimization investigation tool to help maximize profitability.

2.5. Product Specifications

The operators of the crude distillation facilities have considerable freedom and latitude in controlling product specifications, including boiling ranges, flash-point and color or pour-point of individual distillate fractions. However, the range of control is subject to equipment design limitations such as the number and efficiency of fractionation trays (or packings). The operators have no control over other inherent characteristics such as sulfur content or viscosity levels as these are determined by the specifications of the crude oil supply. The Mazovian operation does have an extra degree of freedom in that the vacuum bottoms are presently assigned only to fuel oil and bitumen products. No deasphalted oil for lubricating oil bright stock production is used, although a visbreaking operation could have merit.

Table C.2.5.1. shows selected intermediate product characteristics.

TABLE C.2.5.1. - SELECTED INTERMEDIATE PRODUCT PROPERTIES

Product Characteristic	Medium Gasoline from crude unit naphtha splitter	Light Gasoline from crude unit naphtha splitter	Crude Unit Diesel Oils Selected Factions		
			Spec. A-13	Spec. A-24	Spec. A-43
RON	49.7	72.5			
MON	48.0	72.0			
Temp °C	Vol % Distilled	Vol % Distilled			
70°C	00.0	70.0			
110°C	45.0	99.5			
120°C	50.0	99.5			
180°C	99.0	99.5			
185°C	99.5	99.5			
Sulfur - wt%	0.00	0.005	0.20	1.06	0.33
RVP - KPa	43.0	110.0			
Density Kg/m^3	--	--	794	862	820
Viscosity at 20°C, CS			1.7	13.1	2.7
Vol % Distilled					
0%			140°C	253°C	169°C
10%			173°C	288°C	200°C
50%			199°C	321°C	236°C
90%			219°C	361°C	278°C
EP			235°C	382°C	296°C
% Distilled			99	99	98.5
Flash Point, °C			44	131	73
Pour Point, °C			-58	-4	-36
Cold Filter Cloud Point, °C			-58	-2	-35
Cetane Number			44	51.2	46.2

34

2.6. Unit Yields

TABLE C.2.6.1. - CRUDE UNIT YIELDS (as reported)

Description	Wt%
Refinery Gas	0.3
IBP - 90°C	6.0
90 - 150°C	8.4
150 - 180°C	4.2
180 - 210°C	4.7
210 - 240°C	6.6
240 - 300°C	10.4
300 - 350°C	7.2
Atmospheric Bottoms	52.2
350 - 440°C	10.9
440 - 480°C	7.5
480 - 505°C	8.1
505 - 520°C	4.6
Vacuum Residue	20.8
Loss	0.3
Total	100.0

The cut points for both atmospheric and vacuum distillations are somewhat low compared to U.S. standards, particularly for the preparation of cracker feedstock. However, the sulfur content of the residue must be considered in the refinery's planning and operations.

The refinery provided the DMC team with the results of a crude unit test run. This test run data was input to a process simulation for the purpose of determining bottlenecks and recommending possible corrective measures. The results of this simulation, including summary computer data sheets, are contained in Appendix F.

A preliminary simulation of the test run results for Crude Unit I indicate that excessive heat was being rejected in the bottom pump-around circuit. There is a reasonably close relationship with the test run results for product quality and the tower temperature profile at approximately half the bottom pump-around duty with corresponding increased duties for the mid and top pump-around streams. These results will impact the feed preheat train but the information is too incomplete to consider any serious review of this aspect of the operations. A more complete check with current operations is needed to calibrate the model with more certainty. However, the simulation results suggest the following considerations for tower operations:

- increase the temperature at the flash zone to recover more atmospheric gas oil
- provide an overhead pump-around instead of a reflux
- review the flash zone transfer line inlets to ensure good vapor/liquid separation and avoid black oil entrainment.

2.7. Unit Modification Potential

The unit layouts are generally spacious, and good access is available from the perimeter to individual items of equipment. Few problems should be encountered when incorporating energy-improving modifications.

The redistribution of some of the atmospheric distillates should be studied further to determine the full impact of changes on the downstream operations, and in particular on the aromatics recovery system and the automotive fuels blending program. The impact of these changes cannot be appreciated until additional studies are conducted.

Improvements to the heat exchange train are feasible with the application of "pinch" technology concepts and an examination of the heat exchanger design principles. This is best undertaken locally where individual heat exchanger performance can be directly measured and the construction details are at hand. Properly selected design improvements can yield immediate cost and energy savings.

2.8. Capacity Increase Potential

Conversion of the existing valve tray systems, where currently restrictive to vapor/liquid tower traffic, to suitable structured packings has been evaluated with respect to increasing capacity by 10% with Romashinko crude. With other crude supplies, a more detailed examination is recommended, but a potential increase to 120% of the original flooding rate of the tower could be achieved for the distillate fractions. To achieve this rate, however, it is assumed that:

- improved crude preheating arrangements are completed so that the design duty of the heater(s) would not be exceeded
- pumps and motors would be able to provide the necessary equipment pressure drop while still maintaining control of the flow.

2.9. Operating Practices

A two-stage electric desalting system is installed with injected vacuum jet condensate to the second desalter, then counter flowing through the first state before purging. Minimizing the desalter water application rate is desired, but the crude preheat temperature at the desalters is a surprisingly low 80-100°C. The effluent desalter water interchanger was in bypass with considerable entrained oil content. More effective desalting temperatures in the range of 120-125°C and perhaps investigating a more effective demulsification chemical formulation are suggested improvements.

Operator attention is required to maintain reasonable excess oxygen levels (3-6V%) in the heater flue gas by manual adjustments at the air registers, based on the results from portable oxygen analyzers.

2.10. Replacement/Shutdown Observations

Current operations approximate 80% of design capacity for the four distillation trains. However, two of the trains (I & IV) are scheduled for less than 70% annual capacity operations. Greater energy efficiencies can be expected at through-puts near the design rating and at extended turn-around periods based on established preventive maintenance principles. It may, therefore, be possible to operate only three of the distillation units to accommodate the decreased refining levels with enhanced energy efficiency resulting. Energy gained from shutting down one unit would be an immediate improvement.

3.0. NAPHTHA HYDROTREATER/PLATFORMER

3.1. Process Flow Diagram

A process flow diagram for this unit is shown in Figure No. 3 on the next page.

3.2. Feedstock

Stabilized feed from the crude units is received from storage. A light heart-cut (150°C cut point) feed is processed for petrochemical aromatics production while a full range IBP-180°C fraction is processed for octane improvement and gasoline blending.

The capacity ratings of the units are 41.0 tonnes/hour. The units are operated at similar severities with two units dedicated to aromatics and the other two to gasoline purposes.

3.3. Unit Flexibility

Operations personnel did not identify any bottlenecks in the UOP Unibon/Platformer System. The Unit 1 hydrogen-rich gas recirculation is at a fixed rate, whereas the other units are equipped with hydraulic variable-speed controls.

A range of light to heavy naphthas are regularly and satisfactorily processed. Furthermore, a variety of US and Polish catalysts are used, all with similar results.

3.4. Operational Sensitivity

The reforming process is a flexible operation but is directly influenced by the quality or origin of the feedstock. The Unibon section of the plant safeguards the platforming catalysts from poisoning by organic sulfur compounds. Nevertheless, the severity of operations required to achieve the necessary octane level for sales gasoline blending depends strongly on the paraffinic/naphthenic/aromatic hydrocarbon ratios in the feed. These ratios in turn are influenced by the nature of the crude selection. Thus, crude selection is of importance to platforming capacity, catalyst life, and yield performance.

3.5. Product Specifications

The essential objective of platforming is to achieve the required octane level to balance the gasoline pool octane specifications. The current research octane level requirement is a modest 90.5 RON although 97.0 RON was measured under test run conditions.

An additional severity of approximately two RON points will be necessary beginning in January 1992 when new regulations calling for reductions in lead levels to 0.15 grams per liter (from the present 0.4 grams per liter) will take effect. In an effort to counter-balance the trend toward lower lead and non-lead gasoline formulations and those with restricted aromatics content, Mazovian is constructing a new UOP Continuous Catalytic Reformer (CCR) and looks toward the future production of methyl t-butyl ether as an octane-enhancing additive to gasoline blends. Mazovian also plans to convert a platforming unit to pentane isomerization.

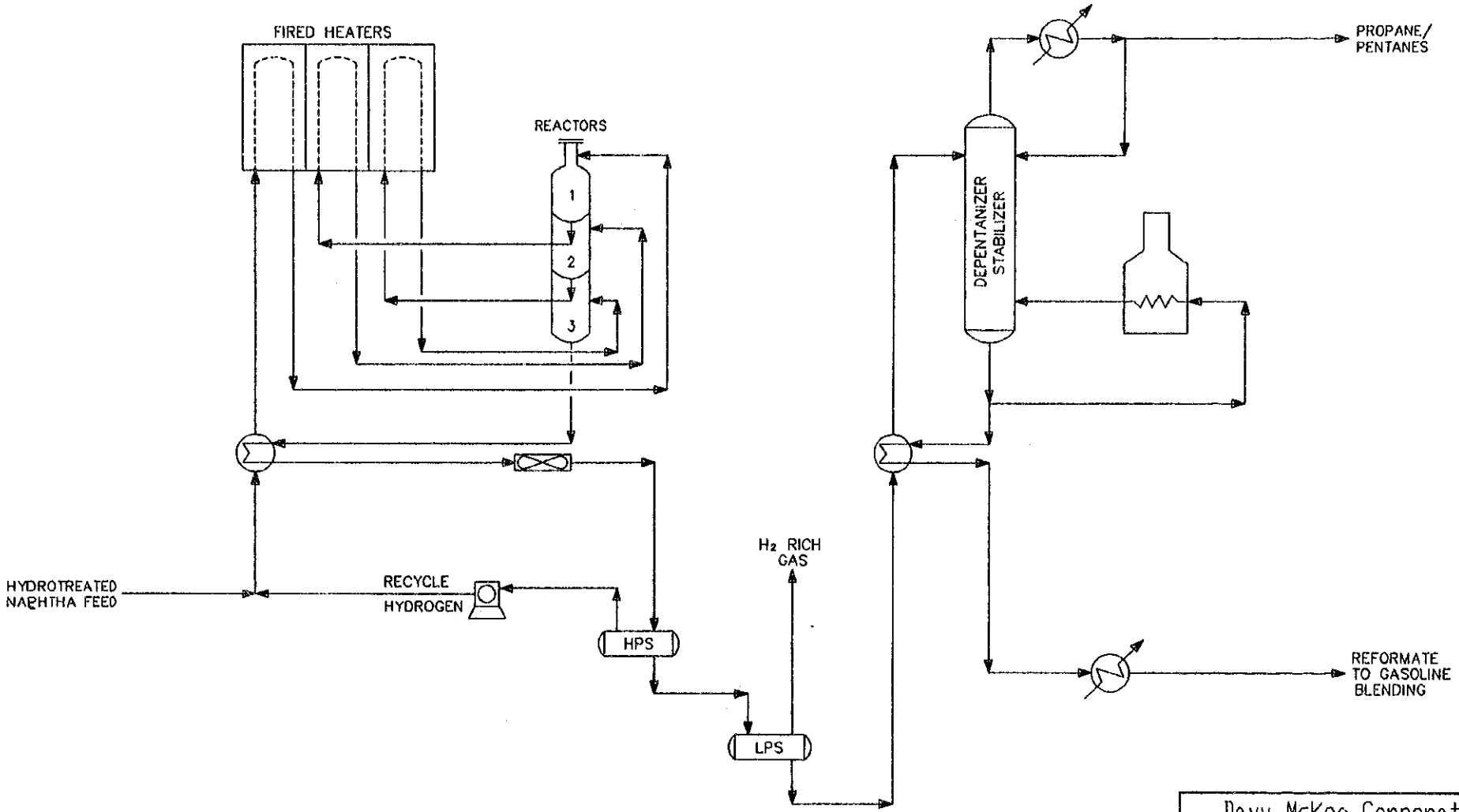

DATE	REV	BY	APPR	DESCRIPTION
10/25/91	A	T.G.		FOR EVALUATION REPORT
5/20/92	0	EJF	AW	FOR FINAL REPORT

Davy McKee Corporation
CHICAGO ILLINOIS

MAZOVIAN REFINERY
PLOCK, POLAND

SIMPLIFIED PROCESS FLOW DIAGRAM
CATALYTIC REFORMING UNIT NO. 1

DWG. No. 2063-32-05-102 | 0

FIGURE 3

3.6. Unit Yields

TABLE C.3.6. - NAPHTHA HYDROTREATER/PLATFORMER UNIT YIELDS

Description	Wt %
Hydrogen rich gas	>6.0
Refinery gas	3.0
LPG	5.0
Reformate	87.4
Loss	1.0

Product stabilization and LPG production are included as an integral part of the platforming facilities. In addition, the hydrogen offgas from the naphtha hydrotreatment section, slightly contaminated with hydrogen sulfide, is sent for reuse to the lube oil hydrofinisher unit. Water coolers are utilized throughout.

Mazovian has already investigated the performance effectiveness of various reforming catalysts including UOP and Engelhard from the US and the Herox catalyst from Czechoslovakia. The results are reported to be equivalent so it is believed no important energy benefits can be realized by recommending any changes.

Revamping of the heaters to collect the flue gases from the four heater services to generate 7.5 tonnes/hour of 1.7 Mpa steam in a waste heat boiler and heater combustion air preheat are an important contribution to energy economy. Flue gas is rejected to the stack at approximately 180°C. Some corrosion has been observed on the induced draft fan blades, but the stack is stainless steel. 150°C is considered the lowest practical temperature when firing sweet fuels, so a 180°C temperature is regarded as reasonable considering the dew point with corrosive sulfur containing flue gas.

41

The Mazovian energy demand data for this unit shows a requirement for 989 270 Kcal/tonne of feedstock, while the expected demand for the U.S. is 950 000 Kcal/tonne. This implies a potential could exist for at least a 4% improvement.

It is difficult to conceive further significant improvements that could provide adequate cost/benefit returns in respect to energy savings. Perhaps there remains some scope for boiler feedwater preheating or extending the number of shells in interchange services, but it would appear the practical limits for these possibilities have already been reached. Only a more detailed investigation could evaluate remaining opportunities more clearly.

3.7. Unit Modification Potential

This unit was recently modernized and there is very limited scope or necessity for further modification. Furthermore, a new continuous catalytic reformer (CCR) is under construction. The alternative is to convert a redundant reactor system and allied facilities to another use when the CCR is operable. As previously indicated in Section C.3.5. the refinery plans to convert a platforming unit to pentane isomerization, and this can yield effective octane advantages. Therefore, it is contemplated that a reformer unit will be converted to this service in the foreseeable future. An isomerization unit is a long term capital improvement.

3.8. Capacity Increase Potential

The investment decision to build the new CCR, which is under construction, will remove any limitations on reforming capabilities at the Mazovian complex. Furthermore, the recovery of pentanes for isomerization will permit larger throughputs of hexanes and heavier components for reforming so future limitations and difficulties in this area of refining operations are felt to be remote.

3.9. Operating Practices

Operations at this newly revamped reforming facility were of a high standard and the operating staff are to be commended.

3.10. Replacement/Shutdown Observations

There is no reason to consider replacement or shutdown at this time. Note, however, the comments in Section C.3.7. regarding conversion of one of the platformers to a pentane isomerization unit.

4. FLUID CATALYTIC CRACKER I AND II

4.1. Process Flow Diagram

The process flow diagram for this unit is shown in Figure No. 4 on the next page.

4.2. Feedstock

The Fluid Catalytic Cracking Unit I was built by the USSR and is a copy of the old Model II type with a rated capacity of 800 000 tonnes/hour (18 000 BPSD). Fluid Catalytic Cracking Unit 2 is a UOP, 1972 design with a capacity of 1 500 000 tonnes/year (32 000 BPD) and is equipped with a carbon monoxide boiler without an expander. It also has an amine wash, merox light liquid product treating and a high purity 99.6% plus polymer grade propylene fractioner operating with a condenser/reboiler heat-pumping system.

The feedstock is taken from storage and consists of blended vacuum gas oil fractions 320 - 535°C boiling range after the removal of selected lube oil stocks) received from the four trains of the crude distillation unit. Under these conditions, there is little variation in composition, thus assuring stable operations for the crackers.

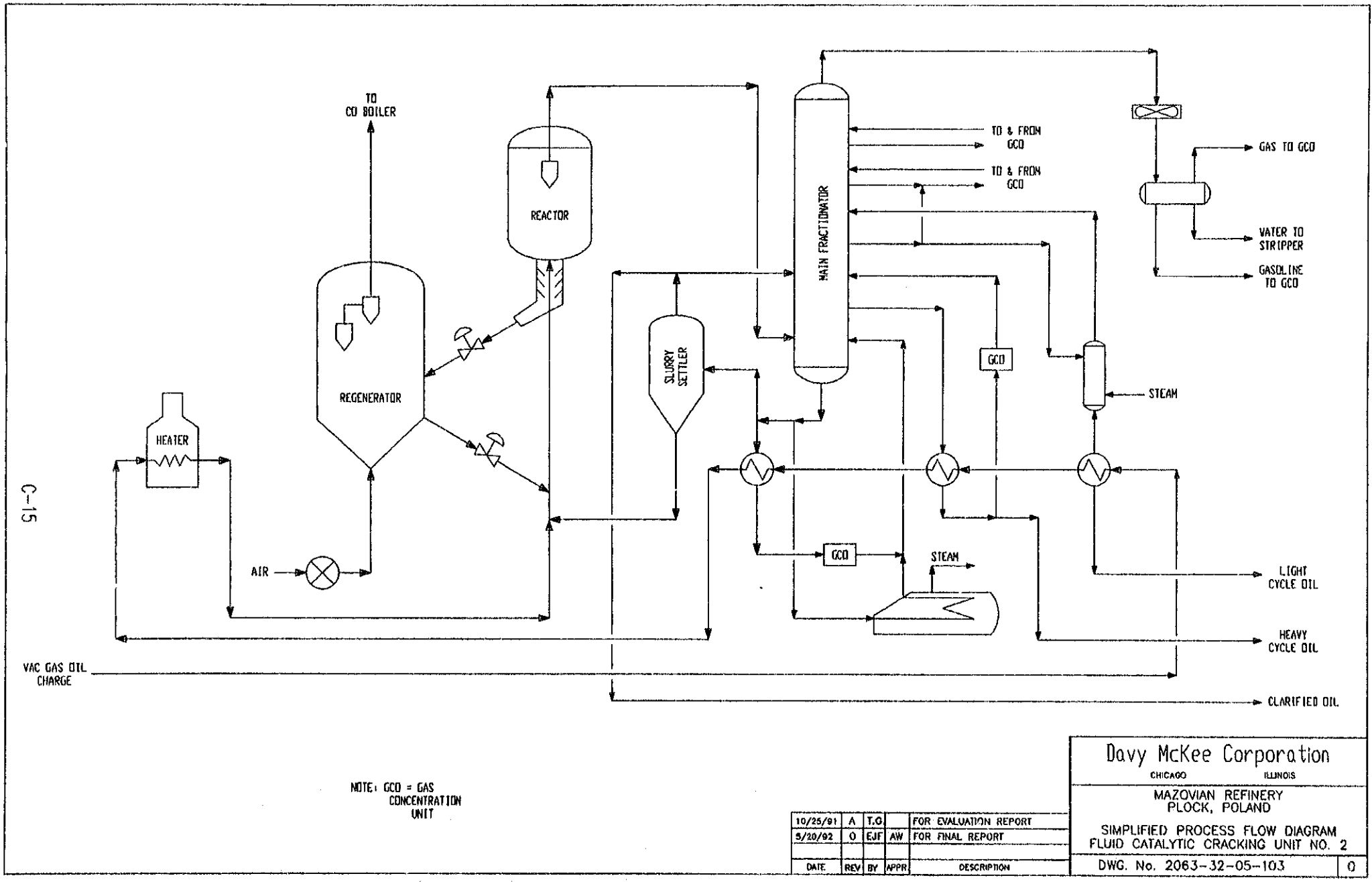
TO
CO BOILER
REACTOR
REGENERATOR
HEATER
AIR
SLURRY
SETTLER
MAIN FRACTIONATOR
TO & FROM
GCO
TO & FROM
GCO
GCO
GCO
STEAM
STEAM
GAS TO GCO
WATER TO
STRIPPER
GASOLINE
TO GCO
LIGHT
CYCLE OIL
HEAVY
CYCLE OIL
VAC GAS OIL
CHARGE
CLARIFIED OIL
NOTE: GCO = GAS
CONCENTRATION
UNIT
Davy McKee Corporation
CHICAGO ILLINOIS
MAZOVIAN REFINERY
PLOCK, POLAND
SIMPLIFIED PROCESS FLOW DIAGRAM
FLUID CATALYTIC CRACKING UNIT NO. 2
DWG. No. 2063-32-05-103
0
DATE REV BY APPR DESCRIPTION
10/25/91 A T.G FOR EVALUATION REPORT
5/20/92 0 EJF AW FOR FINAL REPORT

FIGURE 4

4.3. Flexibility

Crackers can accommodate wide variations in feedstock but operating conditions must be adjusted accordingly for different yield structures. In most situations, the unit capacity level is limited by the regeneration coke-burning capabilities or by the combustion air compressor rating. The Unit II cracker is operated near its maximum rate, but the reactor has been in service for over 100 000 hours and will shortly have to be replaced in accordance with Polish pressure vessel codes regarding high temperature creep. The Unit I cracker contains 550 tonnes of catalyst compared with 140 tonnes of catalyst for Unit II. This inventory, however, is made up from equilibrium Unit II catalyst. A large electro-precipitator unit is installed in Unit I to reduce the loss of fines (approximately 30 tonnes/month), but it is more difficult to properly dispose of this material due to the rather high concentration (2 500/500 WPPM) of vanadium/nickel.

4.4. Operational Sensitivity

Varying feed compositions can cause unsteady operability in crackers, but Mazovian has resolved this problem by blending in tankage. Another significant feature is the efficiency of the reactor cyclones in removing a high percentage of the catalyst particles from the product vapors to the main fractionator to minimize the degree of slurry recycle. Obtaining the desired conversion levels to gasoline and diesel components, in catalytic cracker operations, is sensitive to the catalyst formulation. The catalyst activity level must be maintained in order to obtain the desired conversion for best refinery fuel pool balances. The original Unit I cracker gasoline yield of 25-30% has been raised to about 45% which is only about 3% lower than Unit II cracker. However, due to lower operating temperatures, the Unit I diesel shows a superior 35-cetane number compared with 20-cetane number for the Unit II cracker.

4.5. Product Specifications

Cracked distillates are olefinic and therefore unstable. Anti-oxidants and stabilizing additives are added to products to meet industry minimum standards for gum formation. Aside from this chemical problem, all normal product specifications can be readily maintained by proper operation of the fractionation equipment. The cracked gasoline RON/MON of 94/81 is an important blending component in the refinery gasoline pool.

45

4.6. Unit Yields

TABLE C.4.6.1. - FLUID CATALYTIC CRACKER UNIT YIELDS (wt%)

Description/Unit	Unit I	Unit II
Hydrogen sulfide ex DEA		1.2
Dry gas	3.5	4.5
Propylene		3.5
Propane LPG	8.3	1.5
Butylene		5.0
Butenes		2.4
Pentane/215°C	44.0	48.2
Catalytic Diesel	29.1	19.6
Catalytic Slurry	10.0	9.2
Coke	5.0	4.8
Loss	0.1	0.1
TOTAL	100.0	100.0

Unit II fully treats light products whereas Unit I products require further treatment. This accounts for some significant differences in specific energy demands between the units.

Opportunities observed for potential energy savings follow:

- A tailgas expander appears to be a major energy-saving option for the fluid cat-cracking units. However, the reactor replacement problem for Unit II must be resolved first. It would be logical to consider modernizing these two elements of the FCC unit simultaneously. IN addition, we might suggest that the licensor be contacted regarding the use of a combustion promoter in the regenerator as a further aid for the improvement of operations.

- The provision of hot feed to the cracker could lead to a considerable improvement in the energy efficiency of the crackers if a satisfactory alternative for the crude/vacuum distillation preheat train can be evolved simultaneously. These questions require considerable engineering study for resolution and are mentioned here for the record.

- Fouling at the slurry oil/fresh feed exchanger and in the main air fin condenser has caused operational disruptions in the past. It would be a good practice to institute an exchanger temperature/pressure drop monitoring scheme to follow potential fouling trends with the aim of optimizing cleaning schedules.

- Operators are dissatisfied with the reactor 2 insulation materials and applications supplied by the Japan Gasoline Company contractors. This may have caused coking problems; but, in any event, there are excessive heat losses that could be avoided.

- The current program includes an annual 30 to 35 day turn-around period. The goal is to extend this to a bi-annual turn-around schedule. This effort will avoid the energy and product losses experienced during extra start-up and shutdowns.

- Oil in the condensate to the boilers has caused occasional problems. No suitable or reliable instrument is known to the Mazovian staff.

- The propylene fractionator heat pump system is very stable and performs satisfactorily. The Mazovian group is to be applauded for utilizing this energy-saving scheme.

4.7. Unit Modification Potential

The potential for adding an offgas expander as a useful device for recovering the large amounts of energy previously wasted by throttling the hot flue gases to the atmosphere has been previously cited. US experience during the past twenty years in this area has improved significantly. Modern installations show a high degree of reliability and reduced erosion of the turbine blades by residual catalyst particles.

Insufficient data is available on the refinery products market and price outlook to comment on the question of any possible improvement based on catalyst selection. This question must await more detailed LP studies of refinery operations.

4.8. Capacity Increase Potential

The potential for increasing fluid cracking capacity is normally restricted by the installed air compression capacity or coke-burning rate of the units. An up to date design, as indicated in Section C.4.6., combined with a combustion promoter in the regenerator could reduce coke and gas yield.

4.9. Operating Practices

In contrast to Unit I, FCC Unit II showed good housekeeping with few steam leaks. The operators' performance in maintaining the carbon monoxide boiler flue gas at 2.0 wt% oxygen content is excellent. Numerous steam leaks were observed in Unit I, but this unit was slated for shutdown and turnaround within a couple of weeks.

4.10. Replacement/Shutdown Observations

As noted in Section C.4.3., the FCC Unit II Reactor has been in service over 100 000 hours and must be replaced in accord with Polish Pressure Vessel Codes.

5. PLANT LIMITATIONS

5.1. Unit Capacities

Comments on flexibility and capacities of the units reviewed are contained in Section C.1 through C.4.

5.2. Product Requirements

The refinery is able to meet all specifications for the products that are prescribed by the Polish standards. In the event of a crude oil change, other limitations might result from different crude characteristics. This would probably require operational changes and modifications to blending schemes, but it is believed that the refinery would meet requirements.

The fuel oil sulfur content, which at times is reported to exceed 3 wt%, is of concern with respect to product quality.

5.3. Fuel System

The fuel system is not reported to be a limiting factor in operations.

49

5.4. Steam System

No limitations noted.

5.5. Electrical Power System

No limitations noted.

5.6. Tankage

The refinery has just started to test a Rosemount system to measure levels and density in the tanks. About 120 tanks have to be monitored. Therefore an integrated system of tank monitoring and data logging might significantly improve the tank farm management. At maximum crude throughput, the refinery has five days of crude tankage available.

5.7. Other Limitations

A significant limitation that needs consideration is the issue of lack of a custody transfer station. Currently the Mazovian Refinery does not buy crude oil directly from foreign suppliers. The crude delivered from the USSR is purchased by a *state owned company "PERN", which has its own tank farm. Crude from the tank* farm is pumped through two 800 mm lines. Data on maximum flow rate were not available. It is also not clear what kind of measurements and procedures of crude transfer were in force between the USSR and "PERN" and between "PERN" and the refinery. It is suggested that the refinery should carefully analyze the custody transfer accounting. Also, for the price of custody transfer equipment, its calibration and maintenance, and possible losses of hard currency due to inadequate accuracy of the measurement of incoming crude.

A good custody transfer installation is expensive. Depending on the required maximum flow of the crude it should have several positive displacement meters or turbine meters with the appropriate pipe runs and valving, crude oil filtering, and sampling system with intermittent or on-line monitoring of bottoms, sludge, and water in the crude and for measurements of temperature and density.

D. HEAT CONSERVATION

1. HEAT TRANSFER PRACTICES

The Atmospheric/Vacuum Distillation Unit IV, Naphtha Hydrotreater/Reforming Unit I and Fluid Catalytic Cracking Units I and II received a detailed review of operating conditions in Section C. The documented energy demands for these units, compared to typical US requirements, are shown below.

TABLE D.1 - Refinery Unit Energy Demands

Unit	Mazovian Specific Energy Demand KCAL/tonne	Mazovian/US (%)	US Specific Energy Demand KCAL/tonne
Atmospheric/Vacuum Unit IV	327 060	107.2	305 000
Hydrotreater/Reforming Unit I	989 270	104.1	950 000
FCC Unit I and II	912 896	157.4	580 000

2.0. UNIT HEAT BALANCES

2.1. CRUDE UNIT

An interesting aspect of the crude distillation systems is that all of the vacuum operations were in fractionating service although only a small portion of the vacuum distillates, 272 550 tonnes/year, were utilized as lube oil feedstocks. The major portion of vacuum distillates, 1 819 109 tonnes/year, was reblended for FCC feedstock.

It appears that considerable energy savings could be realized by concentrating lube quality vacuum fractionation to a single unit. Other vacuum units could be simplified by removing excess trays and eliminating or considerably reducing vacuum distillate stripping steam for the sole purpose of preparing FCC feedstocks. Although special factors specific to the Mazovian Refinery need to be evaluated, this suggestion is worthy of serious consideration since the distillation systems consume 45.6% of the total refinery energy demand. Projected savings would help to decrease the overall refinery energy consumption.

2.2. NAPHTHA HYDROTREATER/PLATFORMER

A recent upgrade of the waste recovery systems has brought the Naphtha Hydrotreater and Platformer operations close to US energy consumption standards. In addition, the plant engineering team has revamped the reformer heaters with breeching to a 1.7 MPa waste heat boiler and air preheating facilities.

2.3. FLUID CATALYTIC CRACKER

The FCC unit receives cold feed from storage at 60-80°C, and the energy efficiency of the unit is adversely affected. The justification for this is two fold. First, the distillation units are approximately one mile from the crackers. Second, a continuous and balanced feed supply is not available because the feed is received from four separate operating units. The strong preference at the refinery is to import the blended feeds directly from the storage tanks. However, the fact that gas oils provide a certain amount of potential crude preheat must not be overlooked.

The Mazovian complex, with refinery and equipment designs dating from the mid 1960s, originated during a time of cheap energy and economically unjustifiable energy saving practices compared to present standards. In spite of this, the refinery staff has and continues to take steps to alleviate the over-consumption of energy. A preliminary statistical evaluation by DMC showed that a further improvement of 0.46 wt% fuel oil equivalent (FOE) on crude is attainable with a crude run of ten million tonnes/year. Therefore, continued efforts are to be encouraged to suitably adjust operations and install energy saving modifications since a 0.46 wt% reduction in energy demand would save 46 000 tonnes of crude equivalent. This represents a savings of about $5 500 000/year at current international market prices of approximately $120/tonne.

3. HEAT TRANSFER EQUIPMENT ANALYSIS

3.1. Fired Heaters

Analyses of fired heater operations, heat exchange trains performance, and waste heat recovery opportunities and practices are discussed in the individual unit assessments of Section C.

3.2. Heat Exchanger Trains

The refinery is not dissatisfied with heat exchanger performance. However, in new design applications, heat transfer rates can be improved by modifying the characteristics of individual exchangers with respect to fluid velocities, baffle pitch, baffle cut, and other design factors. A more fundamental analysis of heat exchanger train arrangements using computer analysis and optimizing design programs such as HTRI and incorporating heat exchanger design considerations would be fruitful.

The crude preheat exchanger train should be continually monitored for both shell and tube side temperature readings and differential pressure to detect fouling tendencies and loss of heat transfer at an early stage before energy losses become excessive. With suitable documentation an optimal cleaning schedule could be developed.

3.3. Waste Heat Recovery

In general, the refinery uses heat recovery from hot product streams through the use of product to feed exchangers. Further, air preheaters are in use and an additional air preheaters under consideration. Also, some process heaters are used to superheat steam within related process uses and low-level heat is supplied to the town of Plock for district heating purposes.

3.4. Cost Effectiveness of Increasing Surface Areas

An increase in crude heat exchanger efficiency, through an increase in heat exchanger surface area or improved insulation, reduces operating costs. At $74 per tonne of fuel oil (the internal refinery price in May, 1991) and 80% fired heater efficiency, a one degree centigrade improvement is worth $75 900 per year. The calculations on which this conclusion are based is given in Appendix G.

4. STEAM SYSTEM

A description of the steam system is contained in Section B.3. High pressure steam generation is dependent on power import or export to the national grid. Consequently, a balance is maintained by a "float" of lower pressure steam from the turbogenerator set or, as necessary, by desuperheating letdown from higher pressure mains. Therefore, energy saving projects should have a negligible effect on the plant steam balance except for a possible and desirable decrease in overall demand.

It should be noted that the Mazovian power house is a significant supplier of power to the national grid during the winter.

5. HEAT REJECTION SYSTEMS

5.1. Cooling Water System

Please refer to Section B.5. for comments.

5.2. Air Coolers

Please refer to Section B.6. for comments.

5.3. Equipment, Piping, and Stream Heat Losses

Please refer to comments on specific units in Section C and Section F for mechanical observations. In general terms, the insulation thickness appears to be appropriate for thermal containment at the temperature levels protected.

5.4. Recovery Systems

Please refer to comments on specific units in Section C and to Section F for mechanical observations.

5.5. Tracing and Temperature Maintenance Systems

In spite of the severe winter conditions in this region, no serious problems with temperature maintenance in the process plant were reported by refinery personnel.

6. USE OF HOT OIL LOOPS

A hot oil loop system is used in the furfural unit. the furnace has a thermal power of 16 MW and the oil is heated to 290 °C.

The balance of advantages and disadvantages must be considered when a loop with circulating hot oil is to be provided as a heat source to several users. There is an advantage to operating one furnace instead of several. The furnace serving as the heat source can be designed for high efficiency and low nitrogen oxide emissions. On the other hand, heat losses could be high in the oil circulating loop if there are long pipe runs for widely scattered users, and there can be a loss of flexibility of operation. A similar balance of advantages and disadvantages also applies to the steam system used to recover heat from the flue gas.

54

E. MECHANICAL DRIVE SYSTEMS

1. COMPRESSORS

Two compressors in the Platformer Units have steam turbine drivers. These compressors are back-up units to the electric motor driven units. Continuous steam circulation is used to maintain the turbines at the proper temperature for immediate changeover.

Fluid Catalytic Cracking Unit II

A steam turbine driven air compressor is used for catalyst bed regeneration. The unit's waste heat recovery boiler generates enough steam at 4.0 MPa to operate this compressor.

Platformer Unit I

This unit has four compressors. Two are driven by electric motors, and two are driven by standby steam turbines. The steam turbines are kept at operating temperature at all times by bleeding steam through them. The compressors are Italian made by Pignone. Two steam driven compressors are centrifugal, and two electrical driven are reciprocating twin head type compressors. The total compressor power requirements are 1.6 MW.

The electrical motors drive through a Belgian made variable speed reducer which is manually set.

2. SPECIAL PUMPS

No special pumps were observed in the study.

The critical pumps of the Mazovian Refinery are electric motor driven, including the boiler feed pumps in the power plant. The electrical distribution system is designed for high reliability. All loads of more than 100 KW and are supplied from 6 kV; 3 phase and 50 Hz feeders.

3. Electric Motors

Most of the electric motors are of domestic manufacture. The largest motors, 4 MW and 3.5 MW, operate at the 6 kV level and are air and water cooled. The medium size motors, 320 to 580 KW, are also rated 6 kV and are air cooled. The other motors, about 2500, are connected to 380 V. All motors are 3 phase AC induction types.

The electric motors used in the Mazovian Refinery are from several sources: Poland, CSFR, Germany, Italy, and the USSR. The maintenance repair shops are experienced and equipped to re-manufacture any motor used in the refinery.

4. Steam Turbines

As noted in Section E.1, two steam turbine driven compressors are installed on a stand-by basis for the FCC 2 and Platformer Unit 1.

5 Special Equipment

Steam ejectors are used for vacuum generation in the crude unit vacuum tower service. It is suggested that the refinery consider vacuum pumps as a means of energy conservation.

56

F. MAINTENANCE/MECHANICAL OBSERVATION

1. OVERALL IMPRESSIONS

The maintenance and repair shops provide excellent quality service. They repair and re-manufacture equipment without the benefit of the original manufacturers' support.

Housekeeping is generally acceptable and notable for cleanliness and lack of debris. However, evidence of neglect in stopping leaks in steam lines, repairing non-functioning field instruments, and removing insulation was observed.

2. UNIT REVIEW

The mechanical equipment of the following units was discussed and inspected:

Crude Unit II

Distillation Unit III

Power Generating Station

FCC Units I and II

Platformer Units I, II, III and IV

Lubrication Plant

HF Alkylation Unit

Sulfur Recovery Units

Asphalt Blowing Unit

Cooling Water System

- The crude units exhibited the most maintenance neglect, specifically Unit II, which is scheduled for its normal turn-around September 1991.

- All other process areas exhibited approximately the same level of need for more maintenance attention. One of the more obvious problems was evidence of steam leaking through the valve bonnets.

3. EQUIPMENT SUMMARY

3.1. Fired Heaters and Boilers

Fired heaters

The design of the crude unit heaters is obsolete with energy losses; they are in great need of attention. The more recently designed heaters appear to be well maintained.

Table F.3.1. shows the operating parameters of heater PC-1 in Crude Unit II, on 3 June 1991. PC-1, a revamped Russian design, is scheduled for replacement in September 1991.

TABLE F.3.1. - OPERATION DATA: FIRED HEATER PC-1

Fuel Flow	
Refinery Gas (47 000 - 50 000 KJ/kg)	1350 Nm^3/hr
Fuel Oil (30 000 - 50 000 KJ/kg)	2.4 tonnes/hr
Process Flow	
Crude Flow (SP. GR. 0-864-0.867)	355 tonnes/hr
Crude Inlet Temperature	245°C
Crude Outlet Temperature	320°C
Vapor Ratio	44.7%
Steam Generated	6 tonnes/hr @2.0 MPa
Convection Section Surface	488 m^2
Radiation Section Surface	905.5 m^2

Boilers

In the power plant, the newer Polish fabricated boilers type 00420 are in excellent condition. the older Czech fabricated boilers, type 00320 are in poorer condition. They do not have automatic firing and are scheduled to be replaced in the near future. The power plant appears to have the best maintenance in the refinery and good housekeeping was evident throughout.

3.2. Heat Exchangers

The general design of the shell and tube heat exchangers uses the standards defined by the Tubular Exchanger Manufacturers' Association (TEMA). Many of the heat exchanger units were designed in the USSR, using materials and design construction standards conforming to TEMA practices. Due to the continued use and maintenance of these units, some modifications to baffles and tube tolerances have been made. However, in general, the heat exchangers compare to the performance of similar units in any Western refinery.

Operation of heat exchange trains does not consider the development of fouling. No data is currently recorded on temperature and pressure differences across the tubes or shell sides. Normal turn-around should require that the bundles be removed and cleaned or replaced after approximately two years of operation.

Oil leakage into cooling water or steam condensate streams is the greatest operational problem exhibited. At present, the streams exiting each exchanger unit are not sampled. Sampling would reveal where leakage is occurring so that the problem could be corrected.

Oil leakage into condensate requires that the condensate be abandoned for use in the power plant boilers. This problem is more evident in the crude units than in the remainder of the refinery.

3.3. Vessels

All the insulated vessels with galvanized steel insulation covers need either rust removal and painting or replacing the jackets with aluminum.

3.4. Rotary Equipment

Evidence of good maintenance was observed on compressors, fan units, and blowers. However, some pumps exhibited signs of seal leakage.

3.5. Specialty Items

All units, except the recently revamped Distillation Unit III are in need of cleaning and painting of the uninsulated structures, vessels, and pipes.

3.6. Piping and Valves

As previously stated the steam piping and valves showed maintenance neglect.

3.7. Instrumentation

Control valves

The refinery and its power house are mostly equipped with Masoneilan valves. Many of them were imported. However, Poland has a license agreement with Masoneilan, and a significant number of control valves were manufactured in Poland. Also, there are quite a few Fisher valves particularly the specialty valves (i.e. high pressure, high temperature, etc.).

Most of the valves were found to be in good to moderate working condition. However, some valves had developed leaks at flanged connections. It was not possible to determine whether some of the valves had internal leakage when in the shut off position. Control valves are repaired in the refinery's own shops, which are well equipped and have skilled metal workers.

Control System

With the exception of temperature, which is measured with thermocouples and some special instruments, all the field and panel instrumentation is pneumatic. All of their instruments were manufactured in Poland based on Siemen's license and are of 1960s design. Each unit of the refinery has its own main control room with adjacent auxiliary room(s). Control rooms are spacious (approximately 15 meters

60

wide by 12 meters deep by 4 meters high). Panels are floor to ceiling and are located along the long wall. For bigger units the panels are L-shaped and occupy a long and short wall. Process graphics are located at the top of the panel with status lights. Graphics are well laid out and easily observed from the operator's console. The control rooms, auxiliary rooms, and the panels are neat and in good repair. On all the panels inspected, there were no loose or unconnected tubing or wiring. Almost all the panel mounted instruments were functioning according to their designation.

The power house has seven main pressure boilers: boilers #1, 2 and 3 manufactured in Czechoslovakia; boilers # 4, 5, 6, and 7 manufactured in Poland. All boilers work at 13.5 MPa pressure and 540°C. There are five turbines, rated 55 MW each, with a total capacity of 275 MW. The eighth boiler is a stand-by for steam production only with steam pressure of 4.5 MPa.

The power house has four main control rooms. Room 1 has a control panel with instrumentation for boilers #1 and #2, for turbines #1 and #2, and for three letdown desuperheaters 13.5/3.5, 13.5/1.7, and 13.5/0.7 MPa. Room 2 controls boiler #3 and turbine #3. It also has controls for the three letdown stations. Room 3 is for boilers #4 and #4, turbine #4 and #5, and desuperheaters. Room 4 controls boilers #6 and #7 and desuperheaters.

In many cases, especially those involving combustion control on the boilers, the original design was based on using oxygen analyzers incorporated in control loops in order to maintain optimum fuel/air ratio. However, the original oxygen analyzers were not reliable and were not used either for control or for indication. Currently, the Mazovian Refinery has several zirconium oxide analyzers (SERVOMEX, Model 700N) which are used for indication only. Excess air is adjusted by operator. It is planned in the future to use more oxygen analyzers and to incorporate some of these instruments in control loops. Although the claimed efficiency for power boilers is high, it is suggested that incorporation of the analyzers in the control loops for combustion control of the power boilers and of the process heaters (wherever feasible) should improve combustion efficiency. Modernization of combustion controls on boilers and some heaters can also help in some reduction of nitrogen oxides in the flue gas.

For example, with modernization of the combustion controls for a natural draft process heater, becomes feasible when the temperature of the flue gas at the heater outlet is normally reduced to the level of about 200°C. The outlet temperature is reduced when a steam boiler or air preheater at the heater flue gas outlet is installed. In this case, the installation of an automatically controlled flue

gas damper becomes practical. In turn, this would permit implementation of an advanced control system able to compensate for variations in the heat content of the fired fuel and wide changes of ambient conditions while maintaining optimum combustion efficiency. Currently many process heaters are not equipped with such devices. However, installation of zirconium oxide oxygen analyzers on non-modernized heaters and boilers for indication only is quite beneficial. Therefore, it is recommended to retrofit process heaters and boilers with oxygen analyzers as one of the first steps in improvement of combustion control.

It was noticed during the site visit, that instruments on some units with oxygen analyzers were calibrated less frequently than needed to maintain the accuracy of measurements within manufacturer's specifications. Proper maintenance and calibration schedule would keep the instruments in good working order.

The general situation with instrumentation at the Mazovian Refinery may become critical in the near future primarily due to the fact that the production of the pneumatic instruments was discontinued by the Polish manufacturer MERA-PNEFAL. Currently, this company is converting to production of electronic instrumentation, based on a license agreement with Rosemount. This means that the source of pneumatic instruments and the spare parts will no longer be available. The Mazovian Refinery has large, well-equipped instrument repair shops employing a large number of highly skilled workers. This will help to maintain the Refinery's instrumentation in proper working conditions. Eventually the pneumatic instrumentation will be replaced with new electronic distributed control systems (DCS). Since the existing pneumatic instrumentation works satisfactorily, the process of converting to DCS will be extended in time, as economic conditions dictate. As pneumatic instruments are replaced by DCS, they could be cannibalized as a source of spare parts for the pneumatic instruments still in operation.

Conversion to modern electronic field instruments would significantly increase the accuracy and sensitivity of measurements; reduce time required for maintenance, repair and calibration; and significantly reduce the amount of required instrument air. While converting to electronic field instruments, it would be possible to install the new instruments according to modern practices of field instrument installation; for example, using instrument manifolds, close connections (where required), etc. This also improves maintainability and accuracy. The higher sensitivity of electronic differential pressure transmitters would permit in many cases, a reduction in the pressure drop across such flow elements as orifice plates, contributing to overall

energy conservation. While modernizing the process units and the power plant it is recommended that orifice plates be replaced with low loss primary flow elements on all the streams where energy savings would pay off within three years. For rough project justification screening, a three year pay off time is normally considered a good criterion in US refineries.

It should be emphasized, however, that conversion to electronic instrumentation can be done in two significantly different ways: one way is to use intrinsically safe instrumentation, another way is to use explosion proof instrumentation. The choice should be made based on in-depth analysis of costs, reliability, and maintainability.

A control room revamp to electronic instrumentation involves such systems as Distributed Control Systems (DCS) or panel mounted stand alone configurable electronic instruments (CEI) (controllers, indicators, recorders, data loggers, etc.), and Programmable Logic Controllers (PLC). The design of control room revamp should include an uninterrupted supply of electric power, reserve emergency power, improved communication between process unit controls and unit operators, and between the control room and the field operators.

Conversion to control room current "state-of-the-art" electronic instrumentation, although expensive, will permit the following to be achieved:

1. Gradual and orderly replacement of field transmitters, and expansion of the control system along with the pre-planned unit revamping schedule.

2. Higher reliability, especially when redundancy is configured into control loops.

3. Higher accuracy of measurements and control.

4. Introduction of modern sophisticated control algorithms improving accuracy and stability of control. For example: it will be possible to maintain cut points in closer tolerances, it will be easier and less time consuming to change or adjust set points, there will be very few loops requiring manual adjustment, which, in turn, reduces operator's time.

5. Introduction of process optimization algorithms (advanced controls) which improve product consistency and yield and/or increase energy efficiency.

   Process optimization control would in some cases require incorporation of on-line analyzers into the related loops and high accuracy flow measuring devices, especially on product and sub-product streams leaving and entering individual unit, as well on process steam lines and on electric power lines supplying each separate process unit.

6. Extensive automatic data acquisition, logging and processing providing the necessary statistical data for the analysis and further improvement of process and energy efficiency.

7. Automatic compiling of mass and energy balances.

8. Integration of control. At present, each unit has a control room of its own. With the introduction of DCS, control for several units or possibly all the units can be integrated in a single control room. In the latter case, a lockable satellite operator's interface can be placed in each respective unit.

   Integration of control with a DCS would reduce the space required, making the control room pressurization and placement in an optimum location easier, thus enhancing safety aspects for the operating personnel.

   Integration of control would improve the unit operators' mutual communications and enhance accountability.

9. Integration of control would also require changing the means of communication between the control room operators and field personnel. Explosion proof or intrinsically safe radio telephones and closed circuit TV cameras, strategically located in the field, would improve operations and safety.

10. Significant reduction of man-hours required for operation, maintenance and repair of instrumentation.

Conversion to DCS, however, requires significant capital, with a substantial part requiring payment in hard currency. An estimate of the capital requirements for this conversion is presented under Appendix C of this report.

Advance Controls

With the implementation of distributed control system (DCS) on their process units, the opportunity for a greatly increased use of advance controls and schemes became apparent to US refineries. It became apparent to many of these refineries that the increased profits from advance controls would quickly payout on analog instrumented process units, the costs of a DCS and the advance controls. One US refinery decided to convert all its refinery process controls to DCS; its experience was that it normally took four to twelve months of the new control's operations to recover the DCS/Advance control costs for almost all units.

With the implementation of DCS, the following unit advance controls should be considered:

- Crude Units

  - Decoupling the sidedraws - This control allows the board operator to increase or decrease a product draw (changing that product's IBP and EBP) without upsetting the other product sidedraws.

  - Cutpoint calculation - This control replaces an expensive high maintenance analyzer, calculating and inferring boiling point measurements such as 95% point from tower measurements. This measurement can then be used for tower control.

  - Pumparound control - This control looks at the pumparound flows, temperature, energy use and heat transfer and determines the economics of increasing or decreasing pumparound to increase or decrease products flow.

- Reformer Units

  - Reactor optimization - Controls reactor temperatures to optimize the catalyst life versus octane number output.

- Prefractionator control - Sharpens fractionation so as to minimize catalyst poisoning heavy ends and non-reactable light components in the reactor feed, thereby increasing the reformer's octane barrel output.

- Hydrogen Desulfurizers

  - Hydrogen control - Ratio hydrogen to feed to smooth flow, enhance the desulfurization reaction and extend catalyst life.

- Furnace/Heaters

  - Furnace air control - Regulate the combustion air to minimize excess air and prevent smoke formation.

When starting an advance control project, a process audit covering those areas that the advance controls will impact needs to be made. This audit should show all pertinent data such as flows, process condition, energy usage, product quality, and stream values. This establishes the baseline. Three to four months after implementation of the advance controls a final process audit needs to be taken. This audit collects the same data that was taken for the starting audit. With the data from the two audits, a final report can be issued showing the actual savings versus the estimate savings and reasons for any differences. Besides establishing credibility for the project estimate and payouts, it also provides the feedback necessary to improve savings estimating.

Some ideal members of this final audit team are the advance control engineer, the process unit operations engineer, and one of the consulting engineers, if used. With the high degree of savings seen on advance control projects, there is usually a push for their rapid implementation. This push, plus a lack of availability and expertise makes it prudent to hire outside expertise, i.e. a consultant. This is an opportunity to upgrade the expertise of the facilities' staff. A staff advance control engineer should be assigned to work with and monitor the consultant. On later projects, this will allow more (or sometimes all) of the same type of work to be done in-house.

3.8. Electrical Equipment

The electrical equipment is in good condition. An overall analysis is included in Appendix D.

3.9. Corrosion

A problem exists in a sour water stripper area (located in the FCC units) due to the stripping of ammonia and hydrogen sulfide from water. This problem will be addressed during the next turn-around (TAR).

The power plant experiences corrosion in the Ljungstrom air preheater. The sulfur in the flue gases causes the surfaces of the air preheater to corrode. Correction for this problem are presented in Section J as medium-term opportunity number 1.

3.10. Insulation Condition

The galvanized steel jacketing on vessels and pipes should be replaced with aluminum. This is slowly being done in each unit TAR.

4. MAINTENANCE

4.1. Policies

The refinery maintenance policy is to shutdown a unit for repair and replacement of worn equipment or components on a two year turn-around schedule. All operable equipment, no matter what the condition, is operated until the turn-around allows more complete repair. Unscheduled maintenance is done only when equipment fails.

Some practices described in the evaluation of mechanical equipment are recommended to indicate when maintenance is needed on heat exchangers. Improved record keeping on the history of failures and repair of each piece of equipment is recommended. These records could then be used to demonstrate the need for design improvements, material upgrades, or equipment substitutions.

Likewise, pump impeller records, identified by model and serial number, are recommended so as to designate what size impeller is actually installed in each pump.

G. ENERGY LOSS MONITORING SYSTEMS

The Mazovian Refinery has progressed and continues to progress in the area of energy efficiency. Energy consumption needs to be reduced and there is evidence that continued efforts in this area will ensure future success. It is important that Mazovian gets energy metering measurements into an accessible database and starts the implementation of a distributed control system on the process units. This information can then be used to identify energy loss problems, usage charges, and usage trends, and be available for use in advance controls schemes to minimize energy usage.

All of the energy streams (electrical, steam, fuel, and cooling water) on the process units need to be measured accurately and timely data recorded. The measurements would be cataloged and placed into a readily accessible database. In addition, oxygen in the flue gas needs to be measured by reliable oxygen analyzers. An "in situ" type, such as a Zirtek, with the measuring cell installed in the fire box or flue stack, can provide the required accuracy and reliability.

Currently, measurements for a reliable energy usage database are available or are being gathered. These data need to be collected systematically, entered into a computerized database system, and analyzed to identify energy usage problems, losses, and significant trends. Based on the results of the analyses, a program could be initiated to reduce energy losses. If an energy management committee were set up to be responsible for the reduction of energy use to the minimum practical levels, it's task could readily be extended to also effectively handle loss control. In this connection, the potential recovery of flare line waste gases could be investigated.

Systematic energy monitoring, consisting of accurate data collection and timely reporting, would permit the refinery management to charge the process units on a regular calendar basis for various energy utilization. This would establish a basis for efficient energy usage on a per unit basis. The ongoing review and analysis of the data collected could then be the basis for establishing and monitoring a consolidated program aimed at reducing energy losses.

Another method of monitoring and controlling energy usage is through the installation of a distributed control system (DCS) on the process units combined with the installation of advance controls. These systems would permit improved tracking of energy usage and minimize the energy requirements per tonne of crude processed.

Typically, the implementation of energy saving projects are impeded by availability of funds, not by opportunities or solutions to problems. To this end, capital budgeting practices may need review. The previous national central planning system provided minimal incentive to improve local facilities' energy efficiency and, as a result, energy efficiency was a low priority item. Now, the refinery management puts a high priority on energy efficiency, but may not have filtered down to the operating and maintenance staffs. Staff motivation is vital and needs to be addressed to ensure the successful implementation of energy reduction and control measures. The application of motivation techniques, such as setting objectives with mutual agreement between management and staff, accountability, ownership, rewards and ability of the staff to control the variables affecting their objectives, need to be implemented. In summary, much good work has been done by the Mazovian staff to reduce energy consumption. Their continued efforts will help ensure future success.

H. FUEL SWITCHING/UTILIZATION

1. REFINERY FUEL SYSTEM

Information on the refinery fuel system is in Section B.2. of this report.

2. GENERAL REVIEW OF POTENTIAL REFINERY USE FOR COAL

Due to the availability of native coal, this study on the use of coal as an adjunct or substitute for hydrocarbon fuel streams is included in this evaluation report.

Crude petroleum refining in the US typically requires 380 000 Btu/barrel (crude feed) of fired fuel. Heat is generated by burning a variety of fuels in directly fired heaters. Typically the fuels, in both gaseous and liquid forms, are a collection of effluent streams from various refinery operations.

Coal is frequently used in the industry as a fuel source for large capacity boiler units. There are significant costs involved including the base investment, operating expenses, and the cost of activities associated with feed and ash handling equipment, and the cost of sulfur removal. These costs can be charged out over large installations but often prove too prohibitive for small units.

Coal as a fuel is used in many ways, and this report will focus on the most applicable methods for the Mazovian refinery. The first two, direct coal firing and coal gasification, are covered in some detail. Several others, such as coal liquefaction, coal-oil mixtures, coal fired gas turbines, and coal gasification/fuel cells, are briefly described.

A change to the use of coal as a fuel source in the existing refinery process heaters would most likely be restricted to one of the methods in which a product fuel can be produced in one location and piped to the various users. Plot space in the vicinity of the existing furnaces, along with safety considerations, typically does not allow for coal and ash storage and for handling facilities within the refinery processing area. Also, existing equipment is not designed for the particulate loading experienced in the flue gas with coal firing. In addition, any required sulfur removal equipment would have to deal with flue gas clean-up on an individual process heater basis if there were not a central coal processing facility.

The entire refinery energy and equipment conditions must be considered to determine whether coal could be incorporated into the refinery as an acceptable energy source. If a new process heater or utility boiler is needed and the fuel balance allows for another fuel source, then the use of coal may be justified and the new coal technologies would be worth looking at. If the residual fuel picture changes because of modifications to the refinery, coal usage may be justified. Note, however, that in process heater service, good temperature control is difficult.

2.1. Direct Coal Firing

Coal usage is not simple anymore. The days of stoking the fire by shovelful of run-of-mine coal and just letting it burn are over. Today, coal typically must go through physical cleaning, sizing and drying just to get it to the furnace. Burners are specially designed to achieve optimum efficiency and low nitrogen oxide emissions. Additives are injected to reduce ash sticking to heater tubewalls and sulfur dioxide in the flue gas. Flue gas may be subjected to further treatment such as wet scrubbing to reduce sulfur dioxide to tighter levels of environmental acceptance.

Traveling grate burners bring the coal automatically to the burning chamber where it is combusted. Coal with a moisture content much above 30% must be dried before burning, so lignite/brown coals usually need pre-combustion drying. Hot under grate air can be used for this purpose. Ash builds up on the grate until it drops into a hopper. The ash is later removed from the hopper. Sulfur, however, must typically be dealt with after combustion if sulfur oxide removal is necessary. Add on sulfur dioxide equipment adds significant cost to a unit.

Modern direct coal burning systems include atmospheric and pressurized fluidized bed combustion (AFBC and PFBC) units that provide for gas burning, clean-up and heat recovery all in one unit. Limestone is used as part of the fluidizing medium and the calcium present in it reacts with the sulfur dioxide before it is able to escape from the combustion chamber. The result is a non-toxic disposable by-product, if it can be landfilled acceptably.

Fluidized bed combustion (FBC) technology is applicable to a wide variety of fuels including a wide range of coals, residual oil, and petroleum coke. AFBC technology for boilers is available commercially from a large number of licensors, while PFBC technology is still considered to be in the development stages. The application of FBC technology to a process heater may be possible, but it would require extensive pilot test runs and special considerations in equipment design.

2.2. Coal Gasification

Coal gasification has been utilized for a long time, and there are several companies, including Texaco, Lurgi, IGT, and KRW, that have commercialized processes. The products from the gasification, such as hydrogen, carbon monoxide, carbon dioxide, and others, can be used as a chemical feedstock or a fuel gas. To produce a fuel gas of medium range heating value (9.3 - 18.6 MJ/m^3 or 250 - 500 Btu/SCF) suitable for burning in a process heater, oxygen must be used in the gasification. Because of the reducing conditions present in the gasifiers, most of the sulfur in the coal is converted to hydrogen sulfide. Hydrogen sulfide can be reliably removed from the gas stream by a number of available processes. In addition, further processing can then turn it into elemental sulfur.

Development work is being done for in-situ desulfurization in a fluidized bed coal gasifier. This process is much the same as the PFBC except that the product is a gas with a heating value instead of combustion product gases. It is also similar to the FBC technology in that it can utilize a wide variety of fuels, such as the sour residual oil produced within the refinery.

Fuel gas produced in this way can be piped into a plant fuel heater and used anywhere around the refinery. This option is attractive because the coal is used in one central location, while the fuel users can be in many different locations.

Another possible use of the gas produced via gasification could be as a fuel to a gas turbine. The gas turbine could be used to generate electricity or to provide a direct large capacity mechanical drive such as a compressor. The thermal efficiency of a gas turbine is typically raised by using the turbine exhaust gas to raise steam in a waste heat boiler, in a co-generation system.

2.3. Other Technologies

<u>Coal liquefaction</u>

Production of liquid fuels from coal is either indirect or direct. In indirect liquefaction, the synthesis gas produced in a gasification step is further reacted to produce a readily burnable fuel (i.e., via the Fischer Tropsch process to naphtha, diesel and waxes or via syngas to methanol to gasoline). Since the gasification product would be an adequate fuel for the heaters in the refinery, there would be no need to go beyond that step to liquid fuels.

Direct liquefaction producing a No. 2 type fuel oil would be more applicable to the fuel needs in the refinery. Several processes have been developed since the 1960s including H-Coal, SRC-I, Exxon Donor Solvent, and SRC-II (in the US). The high cost and inefficiency associated with these processes led to the cutback of further development of the technologies. The early processes have been modified

and further developed by the United States Department of Energy (US DOE) and industrial partners into a two-stage liquefaction processes. These processes are still not available on a large commercial scale. Estimates are that the cost of a barrel of oil produced by coal liquefaction using such methods might approach $25/barrel by the late-1990s.

Coal oil/water mixtures

The use of coal slurried with oil or water to produce a usable fuel is also the subject of numerous studies and optimizations. There are even annual conferences on "Coal & Slurry Technology" sponsored by the Coal & Slurry Technology Association and the US DOE's Pittsburgh Energy Technology Center (PETC). Coal water mixtures can be prepared with up to 70% solids, while current technologies and pilot plant results show coal oil mixtures are limited to 30 - 50% solids. Coal-oil mixtures could be prepared in one location and pumped around the plant to the various process heaters, however, emissions in terms of sulfur dioxide, nitrogen oxides and particulates would be a problem at each furnace.

Coal-fired gas turbines

Direct coal-fired gas turbines are being developed and improved by General Electric, Westinghouse, and United Technologies among others. The use of gas turbines in this manner at the refinery would most likely be restricted to electricity generation. Solids and impurities deposition on blades and casings would likely require frequent cleaning and duplication of equipment would be required to even out loads. Environmental control requirements would also likely limit the application of this technology to high quality coals.

Fuel cells

The combination of coal gasification and emerging fuel cell technology presents an attractive high efficiency electrical and heat energy generation possibility. Current projections, based on work sponsored by the US DOE, indicate an efficiency between 45 and 55% in converting hydrocarbons directly to electricity. The hydrogen and carbon monoxide rich fuel from coal gasification is suited to fuel cell use, with carbon dioxide used in the cathode side of the cell.

Of the four major fuel cell technologies, two are worthy of mention here: phosphoric acid and molten carbonate. Phosphoric acid fuel cells are at a more advanced state: however, they operate in the range of 200°C compared to molten carbonate cells at 650°C.

The molten carbonate fuel cell is best suited for use with coal gasification in applications where there is a need for good quality heat. The exhaust gas temperature of 650°C is useful in the generation of high quality steam for process purposes. The use of bottoming cycles further enhances the system.

Overall efficiencies, electrical, and utilization of exhaust gas to generate steam, are in the order of 80%. The US DOE is sponsoring sub-megawatt tests of commercial sized units; these tests are scheduled for 1993.

While the technology is not quite ready for commercial use, it is potentially attractive and should be watched closely.

3.0 COAL AT THE MAZOVIAN REFINERY

3.1. Availability and Characteristics of Coal

Coal is not used at the refinery.

3.2. Potential for Use

Modifications to equipment and/or the space required for coal handling, flue gas desulfurization, etc. will require a major capital investment. This is unlikely to occur.

3.3. Economics of Use

The availability and attractive price of natural gas and the ease of use within refinery fired heaters, coupled with the high capital cost required for coal utilization, leads to the observation that new coal burning furnaces are not an attractive alternative for the Mazovian Refinery.

References and Bibliography

Feldkirchner, Harlan (conversation 11 July 1991); Institute of Gas Technology, Chicago, Illinois, USA.

Stauffer, Chris (conversation 11 July 1991); Process Sales Company (representative for Pyropower Corp.), Houston, Texas, USA.

Scowden, James (conversation 15 July); Detroit Stoker, Monroe, Michigan, USA.

Ekmann, James M. (conversation 15 July 1991); Coal Combustion Division, United States Department of Energy, Pittsburgh Energy Technology Center (PETC), Pittsburgh, Pennsylvania, USA.

Vander Molen, Robert H. (conversation 19 July 1991); Combustion Power Company, Menlo Park, California, USA.

Dellefield, Randy (conversation 19 July 1991); United States Department of Energy, Morgantown Energy Technology Center (METC), Morgantown, West Virginia, USA.

Podolski, Walter F. (conversation 19 July 1991); Chemical Technology Division, Argonne National Laboratory, Argonne, Illinois, USA.

Engineering & Economics Research, Inc., Hagler, Bailly & Co.,Inc., PEI Associates Inc.; and Spaite, Paul W.; "Emerging Clean Coal Technologies", Noyes Data Corporation, Park Ridge, New Jersey, USA; 1986.

Cooper, Bernard R. and Ellingson, William A.; "The Science and Technology of Coal and Coal Utilization"; Plenum Press, New York; 1984.

Lord, Norman W., Ouellette, Robert P., Farah, Oscar G., Cheremisinoff, Paul N.; "Coal-Oil Mixture Technology", Ann Arbor Science Publishers; 1982.

McGurl, Gilbert V.; "Two-Stage Liquefaction of Coal", PETC Review, PETC; Issue 1, March 1990.

I. REFINERY EMISSIONS

1. SUMMARY OF ENVIRONMENTAL SURVEY

This section presents information on the environmental impact of refinery emissions in the areas of sulfur balance, air emissions, wastewater, solid waste, impact of maintenance, evaporation, and the loss of products to solvents.

Based on the results of the survey, these suggested improvements for several problem areas were identified. They include:

- reducing the oil discharge in the wastewater stream
- reducing volatile organic compound emissions to the atmosphere
- improving the cooling water heat characteristics
- reducing sulfur dioxide emissions.

Specific environmental emissions reduction opportunities are discussed in Section K.

1.1. Refinery Sulfur Balance

Based upon a throughput rate of 11 000 000 tonnes per year of USSR 1.5% sulfur crude the sulfur to the refinery is 165 000 tonnes per year. The total sulfur loss is 57 065 tonnes per year resulting in total sulfur product shipped of 107 935 tonnes per year. Table I.1.1. shows the distribution of sulfur dioxide losses per year at the above feed conditions and rate. The approximate sulfur balance is shown on Table I.1.2.

TABLE I.1.1. - SO_2 DISCHARGE DISTRIBUTION

Source	Quantity (tonnes/year)
boiler/heater	88 000
sour water	130
Claus loss	2400

TABLE I.1.2 - SULFUR DISTRIBUTION

Distribution	Quantity (tonnes/year)
Sulfur in shipped product	107 935
Sulfur in stacks - heaters/boilers	35 800
Sulfur in sour water	65
Sulfur product from Claus unit	20 000
Sulfur unrecovered from Claus unit	1200
Total	165 000

The plant recognizes the emission of an excessive amount of sulfur dioxide and methods for reducing the amount are being evaluated.

Options currently being investigated include:

- use flue gas desulfurization on major combustion units
- use a low sulfur fuel such as natural gas
- increase the sulfur removal capability
- install a gasifier for the residual oils
- process low sulfur crude.

1.2. Air Emissions

Air emission data was available for the powerhouse boilers and certain process heaters. Based on the stack gas analyses, it is evident that excess amounts of sulfur dioxide and nitrogen oxide are being emitted.

Options for the resolution of the sulfur dioxide emissions are addressed in Section 1.1. above.

To reduce the level of nitrogen oxide emissions, the plant could undertake a four-year plan to replace existing fuel oil burners with staged combustion low nitrogen oxide burners. This could reduce the amount of nitrogen oxide being emitted by approximately 50 to 70%. The specific amount of reduction would depend upon the specific vendor chosen to supply the low nitrogen oxide burners.

Data was not available as to the amount of venting volatile organic compound (VOC) losses from the process tanks. The higher pressure storage tanks are protected with pressure relief valves and rupture discs which vented to a smokeless flare system.

The atmospheric storage tanks were equipped with flame arrestors on the breathing nozzles. A target for reducing the VOC loss is to install vapor recovery units on each of the atmospheric tanks.

The four options for improving tank venting vapor recovery are:

- water cooled vent condenser
- chilled water condenser
- refrigerant condenser
- carbon absorber

With the proper condenser design, the VOC loss could be reduced by 90%. The design considerations are the condensation temperature of the stored material and the location of the cooling medium.

1.3. Waste Water

Inlet water

The Vistula River is used for fire water, cooling tower makeup, and high and low pressure boiler feed water. The water pumping station delivers untreated water to a pair of raw water storage tanks. The water is then fed to various units. Drinking water is supplied by a deep on-site well.

The fire water, feeding the eight fire water tanks located throughout the facility, is processed with a flocculent and sand filtered. This process removes the majority of the suspended solids. The filter backwash water is routed to a thickener tank and ultimately disposed of. The filtered water is chlorinated to control bacteria and slime growths within the pipe lines and also as a precaution in case a worker accidently drank from the system.

The boiler feed water, process waters, and the cooling tower makeup water are treated by lime, ferrous sulfate, and polymer. This process is required because of the high dissolved solids and hardness of the river water. This treatment reduces the hardness of the water and helps to minimize the calcium buildup within the pipelines, cooling towers and heat exchanges.

After the mixing of the lime and ferrous sulfate and polymers, the water is allowed to flocculate and settle. This is accomplished in one of six accelerators at the water treatment plant. The settled flocculent and solids are collected as a sludge. The sludge is removed from the bottom of the accelerators and sent to the chemical sludge thickener for processing disposal. The thickened sludge can be hauled off as a liquid for agriculture use (lime) or centrifuged for thickening or allowed to dry in open sludge beds. The season and demand for the sludge dictates the option used for disposal.

The clarified accelerator overflow is processed through a rapid sand filter. The rapid sand filter is of standard design. The filter bottom water collection and backwash distribution is approximately 1.0 meter of graded gravel to fine sand. The fine sand on top filters out the remaining small particulates of suspended material. When the fine sand becomes plugged, the incoming water is stopped and clean water is pumped through the filter bottom to washout the accumulated sludge. The backwash water is routed to the sludge thickener for disposal of the collected particulate matter.

The filtered water is chlorinated and pumped to the process units requiring process water, to the cooling tower for makeup water and to the boiler feed water treatment plant for further treatment.

The feed water for the boilers producing steam greater than 0.45 MPa is completely demineralized in resin deionizers. The resins are standard and are regenerated with hydrochloric or sulfuric acid and soda lye. The regenerate is neutralized and bled into the chemical waste water sewer. The demineralized water is heated, de-aerated and treated with hydrazine before being fed into the high pressure steam drums.

The water for the low pressure boilers, less than 0.45 MPa, waste heat recovery boilers, and carbon monoxide boilers is partially demineralized and decarbonized in a separate set of resin softeners. This water is distributed throughout the facility in stainless steel pipelines for use as needed. The softener regenerate is routed to the chemical sewer for disposal.

The Vistula River is high in dissolved salts, suspended matter, biological oxygen demand and chemical oxygen demand which make the river undesirable for drinking water. Therefore, the drinking water for the complex is provided from a deep well. The well water is chlorinated before being distributed for use. It was noted most people used bottled water for drinking purposes. Cases of bottled water were noted in the control rooms, change rooms, cafeteria, and offices.

The approximate water balance is shown in Table I.1.3.1.

TABLE I.1.3.1 - REFINERY WATER USAGE

Distribution	Quantity (m^3/day)
Incoming	70 000
Utility and fire	13 000
Loss	1 000
Sold to adjacent factory *	300
Power station *	25 000
Cooling *	30 700

* Decarbonized

Waste water collection systems

The waste water flow from the complex is collected in three systems. The first system collects industrial sewers which includes hydrocarbons from the refinery and the second system collects industrial sewers, including sewers from petrochemical complex. These are separate due to their physical location. The storm water and lagoon system constitutes the third system. The lagoons for the respective facilities are also separate. All of the systems were viewed since the wastes are combined for the final activated sludge treatment process.

The refinery oil sewer was equipped with a wide spot in the sewer for oil collection. This small compartmentalized unit was so overwhelmed with the incoming oil flow that it was ineffective. Following the wide spot were six circular oil separators. Theoretically, these circular basins with tangential inlet and center outlet were to separate the oil and water by centrifugal action. In theory, this should work, but there is no track record of it working in practice. The plant operators bypass the circular units.

The oil water leaving the wide spot flows to either of two parallel earthen lagoons. These lagoons are approximately 50 meters wide by 100 meters long by 3 meters deep. The sides and bottoms are lined with square concrete sidewalk-type blocks (approximately 45 x 45 centimeters, 5 centimeters thick) with oily sand between the blocks. A lagoon is operated until the companion lagoon is cleaned of oil, water, and accumulated sludge. The water is pumped forward for treatment; the oil is pumped to a slop tank for recycle; and the sludge is pumped from the bottom. The removed sludge is either incinerated or spread in a sludge lagoon. The old sludge in the sludge lagoon will need to be treated in the future.

The current incinerator system consists of three fluid bed incinerators. The combined capacity of the three is not sufficient to process all of the oily sludge requiring incineration. A new rotary incinerator is currently on order and scheduled to start-up in late 1992. The staff is not certain this new capacity will be sufficient to allow a high level of the old sludge, mixing and incinerating.

The water flows to the pump station which pumps the waste to two circular reactors where a flocculent and polymer is added to coalesce the oil droplets. The outlets from the reactor flows to an API-type rectangular separator where the oil and the water are separated.

The oil is manually skimmed into three above-ground tanks. Any water drained from the tanks is returned to the waste water flow and the separated oil is trucked back to the refinery for processing.

The water from the API separator is pumped into the mixing box. The mixing box receives the primary treated waste water from both the refinery and petrochemical facilities. The mixing box also receives recycled activated sludge from any or all of the four activated sludge clarification units.

The outlet from the mixing box is controlled and the waste water is routed into one of four aeration units. These aeration units, installed at different times, are similar. The first set of two units consists of long, rectangular boxes with 32 square boxes for fixed platform aerators and four rectangular clarifiers. The second set of aeration units has 36 square boxes for the fixed platform aerators and two separate circulator mechanized clarifiers. The excess sludge is collected and pumped to a sludge thickener and then centrifuged. The centrifuged oily sludge can be fired in the incinerator or stored in a sludge lagoon for future treatment.

The waste water from the activated sludge clarifiers is then routed to either of two open lagoons. One lagoon is currently equipped with two floating aerators. Two floating aerators are scheduled to be installed in the second lagoon. The effluent from two lagoons is sampled and discharges back to the Vistula River. One lagoon is always operating and one is being "cleaned."

The local authorities have set the following standards:

TABLE I.1.3.2. - WASTEWATER STANDARDS

	Allowable Winter (mg/l)	Allowable Summer (mg/l)	Plant Current (mg/l)
COD	230.00	210.00	213.00
TSS	80.00	75.00	82.00
Phenol	0.30	0.20	0.03
Oil (other)	16.00	14.00	5.90
pH	6.50		

The refinery is not consistently meeting the local standards.

The storm water from both the refinery and the petrochemical areas is collected in separate lagoons. The lagoons are equipped with floating booms to collect any floating hydrocarbons. The water accumulated in the storm lagoons is pumped by manually controlled pumps. The pump discharge is routed to the mixing box at the four unit aeration basins or to the head end of the aeration [illegible] The operator has the option of where to route the water, depending upon [illegible] appe[illegible]ance of the rain water.

Typical of most refinery operations, some crude [illegible]ct oils and/or petrochemical compounds have leaked into the grou[illegible]able under the facility. The Mazovian Refinery had a tank failure w[illegible] of the contents soaking into the ground. A shallow well was installed to [illegible]mpt to remove the lost organic matter when it was determined that other refinery materials were found on the ground water surface and mixed in the ground water. More than fifty other sample wells were drilled. The drilling was planned to identify the ground water flow and the extent of the plume of organic products.

With the aid of the Institute of Minerals, an extraction well was designed and installed. The well is located near the center of the highest ground water organic concentration. The design of the well pumping rate causes a cone of depression. The depressed cone causes the floating organics to flow to the apex of the inverted cone of water depression. A second pump is set into the floating organic material and pumped to a portable tank. The organic float is recycled and the pumped water with some dissolved organics is routed to the refinery oily water sewer system for treatment.

Additional sampling wells and extraction systems are being considered. The current system appears able to contain the ground water contamination, but not eliminate the potential breakout of the contaminated plume.

1.4. Solid Waste

The refinery must dispose of the following solid wastes:

- water treatment sludge (30 000 tonnes per year)
- oily waste tank/basin bottoms (35 800 tonnes per year)
- oily waste from chemical coagulation (104 200 tonnes per year)
- contaminated excavated soil
- FCC fines and spent catalyst (1.6 tonnes per stream day)
- spent caustic (13 100 tonnes per year)
- waste biological sludge (140 000 tonnes per year)
- fluid bed incinerator ash (685 tonnes per year)

The high lime content water treatment sludge is hauled off for agricultural use.

The biological waste from the activated sludge process and some oily sludge is combusted in the fluidized bed incinerator.

The ash from the incinerator cyclones is currently being used as a road building admixture. No tests have been made as to the leachability of heavy metals from the ash have been conducted.

Some of the tank bottom oily sludges are also being used as a sub-base for road building. Again, no tests were available to determine any leachable materials from the sludge.

The plant currently does not have an acceptable disposal plan for the spent catalysts from the FCC units. At one time a metals plant was taking the materials but has since stopped. The catalyst manufacturer, the Netherlands outlet for UOP Zeolite FCC catalysts, does not want to reclaim the material. The plant is currently spreading the dust and spent catalyst with the oily sludge in a lagoon. These lagoons are to be mined when sufficient incineration capacity is available.

The spent caustic from the FCC caustic wash unit is currently collected and transported to a nearby paper mill. The caustic and sulfur content is used in the sulfite paper making process.

The plant is currently starting construction of a new rotor kiln incinerator. When the new system is placed on-line, the old sludge lagoons will be mined and sludge burned.

Tests were conducted as to the leachability of the heavy metals from the ashes by The Institute of Chemistry and Nuclear Technology in Warsaw to help determine a cost-effective method of ultimate disposal of the incinerator ash.

1.5. Impact of Maintenance

When the units are left in a non-operating mode, the quality of the water is less than it could be. Also, in some cases, an excessive amount of retention time will allow an excessive amount of volatile organic compounds to evaporate from the surface.

The pumps, flanges, valve stems and compressor seals are not monitored on a regular basis. These potential sources should be watched and monitored more frequently.

1.6. Evaporation

See section I.1.2. for information on air emissions. Recommendations proposed in Section J include:

- Forming a Material Control Committee to identify possibilities for reducing hydrocarbon losses.
- Acquiring a hydrocarbon analyzer for detection of leakage.

1.7. Loss of Products to Solvents

The loss of product material in solvents will be negligible as the only solvents, furfural and toluene/acetone are recycled within their respective lube units. However, there will be a marginal loss of furfural, in particular in the reject water from the unit following steam stripping.

2. HANDLING OF MATERIALS

2.1. Tetra-ethyl lead (TEL)

The procedures for handling and protection against tetra-ethyl lead (TEL) were not made part of this evaluation.

2.2. Aromatics

Aromatics handling was not studied.

2.3. Solvents

Solvents and their methods of use were not studied.

2.4. Halogenated Hydrocarbons

Halogenated hydrocarbons were not involved in the refinery.

2.5. Heavy Metals

The plant personnel are aware of the problems involved with residues containing heavy metals. Attempts have been made to have such residues recycled or shipped to a reclamation industry with little or no success.

The disposition of these residues are currently to building contractors, building block manufacturers or as landfill on site.

2.6. Sulfur

Sulfur has been treated mainly as an emission to the atmosphere and as a product of the Claus unit. Reference is made to this in I 1.1. and 1.2.

2.7. Sulfuric Acid and HF

Sulfuric acid and HF were not studied in a definitive way.

2.8. Combustion Products

The combustion products of the power house boilers and certain fired heaters are discussed in Section I.1.2. - Air Emissions.

2.9. Tars

Vacuum bottoms are mainly utilized as a fuel source. Minimal attention was given to tar or asphalt production.

3. MEASUREMENTS OF EMISSIONS

The Mazovian Refinery is facing significant changes in the requirements for continuous emissions monitoring. Currently, they have to start installing continuous emission monitoring systems on their many sources of pollution. Now, they are facing the task of selection of instruments and methods of monitoring which would comply with government regulations and also be reliable and affordable. Considering that flue gas analyzers are expensive and high maintenance instruments, alternative methods of monitoring should be analyzed. Negotiations with the enforcing authority then can be made before the final method of monitoring is established.

For example, there is no need to install a continuous sulfur dioxide analyzer to monitor sulfur dioxide content of a flue gas from a boiler or a process heater. It may be sufficient to regularly determine the sulfur concentration in the fired fuel, measure and totalize the fuel flow and have a continuous measurement of oxygen in the flue gas. Based on these data, the amount of sulfur dioxide per unit of energy can be calculated, as well as the total amount of sulfur dioxide released to atmosphere during a time period.

The nitrogen oxide components become a problem if/when temperature of combustion exceeds a threshold. This implies that the process of combustion should be carefully adjusted in order to reduce amount of nitrogen oxide and the temperature in the boiler or heater will be accurately measured and maintained below the limit. If the nitrogen oxide remains too high, it may be necessary to go to low nitrogen oxide output.

Consequently, the cost of continuous monitoring systems and the cost of their maintenance may be significantly reduced, if the Mazovian Refinery can positively prove that their combustors are run in a consistently well regulated combustion mode and that all their related measurements are accurate and either made on regular basis (sulfur content in the fired oil), or continuously (oxygen in the flue gas and temperature of combustion). However, the situation with monitoring of emissions from certain process units is somewhat different. For example, the US Code of Federal Regulations requires that sulfur dioxide and carbon monoxide components of fluid catalytic cracking unit catalyst regenerator's emissions should be limited and continuously monitored. On the other hand, the Code permits elimination of continuous monitoring of carbon monoxide, if it is proven that carbon monoxide emissions average less than 50 ppm. This should be demonstrated by continuous monitoring of carbon monoxide for 30 days. In any case good boiler operating practice requires knowledge of the combustion efficiency.

The original oxygen analyzers that monitor the combustion efficiency of refinery boilers are considered unreliable. Several oxygen analyzers, made of zirconium oxide and mounted in the firebox such as Zirtek, are available. Modernizing the combustion controls on the boilers and some of the heaters should improve the combustion efficiency.

4. REVIEW OF SPECIFIC RECOMMENDATIONS

A properly designed, mechanically equipped API separator should be installed to remove the free oil and oily sludge from the refinery oily water sewer. The existing lagoon system is labor-intensive, and allows for excessive VOC emissions.

Excess amounts of oil is flowing to the wastewater treatment plant (WWTP). An aggressive monitoring program should be undertaken to identify the sources of the excess oil. One unit - the desalter discharge - will be improved. The plant has conducted tests with a polymer and has achieved improved water quality in the effluent.

The non-operating clarifier units should be placed in service as soon as the spare parts become available.

Consideration should be given to establishing a program of monitoring the dissolved oxygen in the various aeration compartments of the aeration trains. An imbalance of recycle activated sludge or raw waste water could upset the treatment system.

Expedite the two new floating aerators in the final lagoon.

Reduce sulfur dioxide emissions by considering a mix of the following options:

- installing a flue gas desulfurizer on the power plant boilers
- using low sulfur fuel in the process heaters
- installing additional oil desulfurization capacity
- contracting and selling all of the high sulfur content oils to customers who have flue gas desulfurization units installed
- importing low sulfur crude
- using natural gas
- installing vapor condensers on the breather pipe on the atmospheric storage tanks
- inspecting the flanges, valve streams, pumps, and compressor seals on a regular basis; repairing or replacing any observed leaks as soon as feasible
- replacing on a set schedule the existing burners in the power plant and the process heaters with the low nitrogen oxide burners

Reduce environmental contamination by:

- expanding the ground water protection program by installing additional sampling wells; installing an extraction well where high concentrations of hydrocarbons are located
- improving the desalter water quality by addition of a polymer and/or improving the interface control
- initiating a program of sampling the various residues for heavy metals; after the new rotary kiln is operating, most of the heavy metals will be returned as part of the ash; the ash may need to be stabilized with lime and cement or deposited in a double lined lagoon

- increasing the staff of the environmental control group to allow for additional monitoring
- repairing or replacing leaking crude unit heat exchangers
- installing reverse osmosis water purification unit on the cooling water make-up requirements; reducing the blow down to about 10 cubic meters per hour in lieu of 90 m^3 per hour.

J. ENERGY EFFICIENCY IMPROVEMENTS

1. IMMEDIATE OPPORTUNITIES

1) To reduce heat loss to atmosphere cover valves, pumps, and other equipment with insulation and an aluminum jacket where process temperature exceeds 65°C or more. It is acknowledged that heat exchanger tube sheets in the hydrogen service must be bare for leak detection/fire prevention. In a like manner the insulation of FCCU II should be studied for quality of insulation and potential for improvement in energy efficiency.

2) Replace or repair heat exchanger on desalter water out/feed crude in. Present flow of water out is 97°C, flowing in waste sewer. In addition a short term study might find it possible to reduce desalting water.

3) Procure software and implement an operating system of inventory control, maintenance records and accounting, work scheduling; such as "COMPASS" by Bonner & Moore Associates; TMS by Tital Software Corporation. Improved heat exchanger turn around times might be a result of record control.

4) Operational changes expected to be profitable are:

   - Multiple processing units in the same service at reduced throughputs might be more efficiently run with one or more units removed from service permitting full capacity service on the remaining units.

   - The vacuum units should be run on flashing service for FCCU feed except as needed for lube stock.

   - Flue gas analysis should be maintained under close study to ensure efficient combustion.

5) Studies suggested may justify isomerization of C_5/C_6 cut in the equipment of the catalytic reformer following completion of the continuous catalytic reformer now in construction. In like manner, visbreaking may prove to be a logical step for vacuum residue.

6) Acquisition of a linear program as proposed would facilitate consideration of new programs and developments for the refinery.

2. MEDIUM TERM OPPORTUNITIES

1) Testing of variable speed drives on some high head pumps is proposed as an immediate opportunity. If this procedure is both cost and operationally effective, conversion of pumps N-1, N-2, N-3, N-4, N-5, N-6 and N-7 to variable speed drive will convert the capital requirement for this change to medium term magnitude.

2) Replacement or modification of the existing Ljungstrom furnace air preheater utilizing corrosion resistant material is presented as a cost effective medium term opportunity for energy saving.

3) Other medium term opportunities encompass auditing and management of hydrocarbon transfers, possible reduction of emission losses, and general tankage management.

3. LONG TERM OPPORTUNITIES

1) Replace obsolete design process heaters such as crude unit 2 TC-1 with modern arrangement having:

- Forced draft, pre-heated combustion air
- Efficient atomizing burner nozzles
- Medium to low pressure steam generation
- Automatic on line oxygen analyzers to set correct fuel/air ratio
- Recirculation of flue gas for low nitrogen oxide emissions.

2) Revamp two existing heaters at distillation unit 3 with similar equipment for heat recovery described above.

3) Install turbine expander in FCCU II. Recover 10 MW electrical power, sufficient to supply this unit's demand; 6 MW.

4) Replace power boiler's Ljungstrom unit with stainless steel, or equal corrosion resistant materials. Four boilers.

5) Replace existing 6 cell fan induced draft cooling tower banks with hyperbolic natural draft towers; delete 82 fans; save 4.5 MW energy.

6) Convert from pneumatic to electronic instrumentation. The cost justification of this change may be more subtle than most changes. Reliability and manpower reduction are the chief factors to be studied. For instance, the decreasing availability of pneumatic instruments and parts means more refinery staff devoted to replacement of manufacture of parts. Introduction of a new electronic control system would be expected to free substantial manpower for other tasks. A detailed review of instrumentation is available in Section F. The cost basis for a distributed control system is presented in Appendix C.

Further Work Required

The refinery electrical system could be further improved by an extension of capacitor banks to increase the power factor and avoid the penalties currently being incurred while decreasing electrical losses and improving voltage regulation.

The details of the electrical power study for the refinery are included in the appendix.

J. ENERGY EFFICIENCY IMPROVEMENTS

1. IMMEDIATE OPPORTUNITIES

Description	Cost	Pay-Off
1. Replace or repair heat exchanger on desalter water out to sewer. Presently flowing 97°C to sewer at 17 700 kg/hr. Modify heat exchanger design to discharge 50°C water to sewer.	Budget $100 000 for heat exchanger, piping changes installed.	Save: 17 700Kg/h x 47°C x 1.0 KCal/kg°C = 831 900 Kcal/h Value: 831 900 KCal/h x Kg oil/9600 KCal x tonne/1000kg x $74/tonne oil x 24h/d x 0.8 eff x 330 d/yr x $63 500/yr Payout: $100 000/$65 500/year = 1.6 years

J. ENERGY EFFICIENCY IMPROVEMENTS

1. IMMEDIATE OPPORTUNITIES

Description	Cost	Pay-Off
2. Purchase and install skimmer on 17 700 desalter water out to sewer presently flowing 1 500 ppm oil = 26.55 kg/hour	Budget $30 000.00 for skimmer, piping, insulation, installed; done in concert with Item 2 above.	Crude recovery: = 26.55 x 24 x 330 = 210.3 tonnes/year Value = 210.3 x $120 = $25 233/year Payout = $30 000/$25 233 = 1.19 years

J. ENERGY EFFICIENCY IMPROVEMENTS

1. IMMEDIATE OPPORTUNITIES

Description	Cost	Pay-Off
3. Commission an inspection/study of the FCCU II reactor insulation application with view to establishing the energy losses involved and to assessing the costs for correction.	Uncertain, but budget $5 000 to $10 000.	Undetermined.

J. ENERGY EFFICIENCY IMPROVEMENTS

1. IMMEDIATE OPPORTUNITIES

Description	Cost	Pay-Off
4. Develop and institute a heat exchanger train temperature and pressure monitoring program to detect fouling rates with an aim to optimizing anitfoulant injection and/or cleaning program.	Minimal	Undetermined, but an improvement over the existing practice.

J. ENERGY EFFICIENCY IMPROVEMENTS

1. IMMEDIATE OPPORTUNITIES

Description	Cost	Pay-Off
5. Arrange for a qualified english- speaking engineer to attend a Linhoff-March, Pinch Technology training seminar at a European location. The purpose would be to assess existing heat exchange networks to improve energy efficiency and to share instruction received with other staff members.	$2 500 for a five day course.	Undetermined, but almost immediate when the first improvement is implemented.

J. ENERGY EFFICIENCY IMPROVEMENTS

1. IMMEDIATE OPPORTUNITIES

Description	Cost	Pay-Off
6. Insulate bare pumps, valves, piping, and jacket with aluminum where process temperature exceeds 65°C.	Approximately 250 parts at 1.0 m^2 each. Installed cost at \$210/m^2 = \$52 500	At average process temperature = 150°C, heat loss with a 3 m/sec wind, approximately 3200 Kcal/m^2 = 800 000 Kcal/hr. Approximate value: 800 000/9600x1000 x 24 x 330 x 1/0.8 eff x \$74/tonne = \$61,000/year Payout: \$52,500/\$61,000 = 0.86 years

J. ENERGY EFFICIENCY IMPROVEMENTS

1. IMMEDIATE OPPORTUNITIES

Description	Cost	Pay-Off
7. Test performance and effectiveness of variable speed drives on selected high pressure drop pump circuits using variable frequency control. Select situation(s) where the control valve approximates 30% of total pump head at normal flows which would rise to 50% or more at a reduced 85% capacity rate or less. Note: Suggest a crude unit feed pump trial. If the experience is satisfactory, extend to other appropriate applications. Material cost information: Allen-Bradley, Chicago, July, 2, 1991	50 KW: Material = $9 000 Installed = $11 500 200 KW: Material = $31 000 Installed = $38 750	Power cost use = $0.05/KWH 50 kw @ 30% CV loss = 15 kw x 24 x 330 x 0.05 = $5 940/year Payout = $11 500/5 940 = 1.94 years 50 kw @ 50% CV loss Payout = 1.16 years 200 kw Pump @ 30% CV loss Payout = 1.63 years 200 kw @ 50% CV loss Payout = 0.98 year

J. ENERGY EFFICIENCY IMPROVEMENTS

1. IMMEDIATE OPPORTUNITIES

Description	Cost	Pay-Off
8. Trim selected pump impellers where excessive control valve pressure drop is observed to a minimum 1.0 bar delta P at design flow rate If total head can only be reduced 10% the energy savings will be significant Due consideration should be given, however, to future changing of a more viscous crude stock.	Approximately 40 man hours or about $500 per impeller	Power cost at $0.05/kwh 50 kw pump 5 x 24 x 330 x $0.05 = $1980/year Payout = 0.25 years 200 kw pump 20 x 24 x 330 x $0.05 = $7920/year Payout = 0.063 years (3.3 weeks)

J. ENERGY EFFICIENCY IMPROVEMENTS

1. IMMEDIATE OPPORTUNITIES

Description	Cost	Pay-Off
9. Acquire suitable linear program (LP) software such as "pims" to enable reliable modeling of the refinery and eventually the total complex. When complete (allow 6 months) the model will permit a systematic approach to optimizing operations with regard to feedstock/processing costs and product market realities. As experience is gained, the model can be used to study and identify the following: - areas of existing deficiencies - means of maximizing product profitability - analysis of optimum modernization possibilities	Budget: Software: $50 000 Staff: 2 man years Approximate cost = $100 000	Undetermined, but at 10 000 000 tonne/yr crude throughput at $120/tonne = $1.2 billion/year $100 000 represents 0.008% Experience indicates average improvements of 10% in operational profitability can be achieved using lp techniques

J. ENERGY EFFICIENCY IMPROVEMENTS

1. IMMEDIATE OPPORTUNITIES

Description	Cost	Pay-Off
10. Commission a study or evaluate in-house the potential for modifying two of the four lube stock vacuum fractionators to vacuum flashers with fewer trays and reduced steam injection for producing VGO feedstock for the FCCU I and II	Budget $5 000, but in-house cost would be minimal	Undetermined

J. ENERGY EFFICIENCY IMPROVEMENTS

1. IMMEDIATE OPPORTUNITIES

Description	Cost	Pay-Off
11. Commission a study to evaluate the impact of converting the spare cat reformer to C_5/C_6 isomerization Note: an LP program would be extremely helpful for this analysis	Budget $5 000 to $10 000	Uncertain, but could lead to product quality improvements or a decrease in TEL additions.

J. ENERGY EFFICIENCY IMPROVEMENTS

1. IMMEDIATE OPPORTUNITIES

Description	Cost	Pay-Off
12. Evaluate the implications of removing one unit from service in a multi-unit operations, all at partial capacity. An off-line unit to be held in reserve	Minimal in-house cost	Undetermined, but overall operating efficiency improvements expected

J. ENERGY EFFICIENCY IMPROVEMENTS

1. IMMEDIATE OPPORTUNITIES

Description	Cost	Pay-Off
13. Consider a short term test program for a step-wise decrease in desalting water application together with laboratory advice on the optimum/economic selection of a more effective demulsifier	Negligible, but budget $5 000 for extra laboratory work	Uncertain, but immediate if successful in any decrease in water injection NOTE: A 1 °C increase in crude temperature at design capacity for the plant is valued at $75 900 (see Appendix G)

J. ENERGY EFFICIENCY IMPROVEMENTS

1. IMMEDIATE OPPORTUNITIES

Description	Cost	Pay-Off
14. Commission a study to evaluate needs and decrease in losses to be expected when scheduling operations for two year turnaround shutdown instead of an annual shutdown	Budget $5 000 to $10 000	Indeterminate

J. ENERGY EFFICIENCY IMPROVEMENTS

1. IMMEDIATE OPPORTUNITIES

Description	Cost	Pay-Off
15. Commission a study regarding visbreaking vacuum residue for viscosity reduction leading to decreased heating for firing and/or improved steam atomization and firing efficiency plus recovery of valuable lighter products	Budget $5 000 to $10 000	Indeterminate

J. ENERGY EFFICIENCY IMPROVEMENTS

1. IMMEDIATE OPPORTUNITIES

Description	Cost	Pay-Off
16. Action: Portable flue gas analyzer to measure and record and monitor nitrogen oxides, sulfur oxides, carbon monoxide, carbon dioxide, oxygen, flue gas temperature, and flue gas particulates Benefit: Expedite air pollution sources audit, expedite improvements of combustion efficiency, and verify operation of stationary flue gas analyzer Supplier: American Gauge Corp. (Available through RAECO)	a) $5 125 b) $12 000 (advanced model)	

J. ENERGY EFFICIENCY IMPROVEMENTS

1. IMMEDIATE OPPORTUNITIES

Description	Cost	Pay-Off
17. Action: Purchase one noncontact industrial thermometer Model 514L Thermohunter Pro Benefit: Allows maintenance crew to measure surface temperature and determine hot spots for energy audits and trouble shooting surveys, thereby leading to energy savings through installation of additional insulation. Supplier: Capintec Instruments, Inc.	$15 000	Less than 1 year

J. ENERGY EFFICIENCY IMPROVEMENTS

I. IMMEDIATE OPPORTUNITIES

Description	Cost	Pay-Off
18. Arrange for suitably qualified staff with appropriate language capabilities to attend short refresher courses in "Professional Advancement" such as those conducted at the Amsterdam RAI by qualified US/European instructors. Subject to availability, courses could include: Fired heaters Advanced control systems Environmental and loss control Engineering computing Refinery management Product quality control Project estimating Etc. Objectives: To introduce participants to state of the art techniques, methodologies and practices in their specialties. Also to provide an important contact with Western colleagues.	Budget: Allow $2 500 per course. Suggest an initial trial of 5 courses for evaluation of benefits.	Undetermined, but would expect a pay off in one year through improved competence and awareness.

J. ENERGY EFFICIENCY IMPROVEMENTS

I. IMMEDIATE OPPORTUNITIES

Description	Cost	Pay-Off
19. Acquire a suitable, but low cost, refinery simulation software that will permit initial but effective evaluation of the process conditions and flows for energy saving projects. The objective is to permit an accurate screening of alternatives to determine satisfactory operations and provide the data required for equipment sizing and costings plus engineering control for implemented projects.	Budget: Software: $10 000 Training: $5 000 Suggested software suitable for mounting on PC's: Hysim or SPAN from Kesler Engineering Company.	Undetermined but will lead to effective refinery control of approved capital expenditures and rapid, effective investigations of energy saving ideas.

J. ENERGY EFFICIENCY IMPROVEMENTS

1. IMMEDIATE OPPORTUNITIES

Description	Cost	Pay-Off
20. Institute a "Material Control Committee" which will then be responsible for carefully examining all aspects of hydrocarbon movements and processing to satisfactorily help close the mass balance for all operations and identify the points of all losses. Thereafter to implement actions to control and minimize these losses through a practical loss prevention strategy and to monitor the results on a continuing basis.	Negligible, considered to be a normal extension of Refinery Management and operational responsibilities.	At 3 000 000 tonnes/year capacity and $150/tonne crude value $45 COper 0.01% decrease in refinery losses reported.

J. ENERGY EFFICIENCY IMPROVEMENTS

I. MEDIUM TERM OPPORTUNITIES

Description	Cost	Pay-Off
21. Action: Purchase portable air analyzer model "Scentoscreen" Benefit: Measures total hydrocarbons and volatile and semi-volatile organic compounds such as gasoline, benzene, toluene, ethyl benzene, xylene, C_1-C_6, etc. components in air and in water samples. Well permit the audit of hydrocarbon leakages in cooling water and condensate return systems, leakages in tank-farms and air pollution. Supplier: Sentex Technology, Inc.	Under $12 000	Less than 1-2 years

J. ENERGY EFFICIENCY IMPROVEMENTS

I. IMMEDIATE OPPORTUNITIES

Description	Cost	Pay-Off
22. Investigate the feasibility of a compressor to recover flare gas leakage or spillage that is currently wasted. NOTE: Various refineries have reported successful operations of these systems.	Budget: Allow $5 000 to evaluate potential scope of recovery and estimate of equipment and controls cost.	Undetermined

J. ENERGY EFFICIENCY IMPROVEMENTS

2. MEDIUM TERM OPPORTUNITIES

Description		Cost	Pay-Off
1. Action:	Commission a study to evaluate the best strategy and instrumentation for inter-unit product transfer and accounting. This study should account for pending organizational changes in the refinery.	Undetermined	Depends on criteria adopted for this purpose.
Benefit:	Reduction of unnecessary losses of product.		

J. ENERGY EFFICIENCY IMPROVEMENTS

2. MEDIUM TERM OPPORTUNITIES

Description		Cost	Pay-Off
2. Action:	Commission a study to evaluate best strategy and instrumentation for tank farm management.	Undetermined	Undetermined
Benefit:	To eliminate unnecessary losses of crude and oil products.		

J. **ENERGY EFFICIENCY IMPROVEMENTS**

2. MEDIUM TERM OPPORTUNITIES

Description	Cost	Pay-Off
3. Action: Attendance at education/training seminar related to US practices of continuous emissions monitoring and related instrumentation. Benefit: Result will be improvement in current practices of continuous emissions monitoring and savings due to purchasing proper instrumentation.	Sending US instructor to the refinery = $5 000.	Undetermined

J. ENERGY EFFICIENCY IMPROVEMENTS

2. MEDIUM TERM OPPORTUNITIES

Description	Cost	Pay-Off
4. Action: Continuous emissions monitoring of carbon monoxide, nitrogen oxides, carbon dioxide or oxygen and opacity. Supplier: Lear-Siegler, Anarad, Rosemount	Up to $100 000 per source, depending on the updated National Rules and Regulations.	Depending on regulations and penalties

J. ENERGY EFFICIENCY IMPROVEMENTS

2. MEDIUM TERM OPPORTUNITIES

Description	Cost	Pay-Off
5. Replace Ljungstrom air preheater with stainless steel, or equal corrosion resistant plates in four power boilers. Ref: Telephone contact with Ljungstrom	Budget: Carbon steel $150 000 each 36 month life Stainless steel $250 000 each 240 month life Estimated installation cost = $20 000 each, estimated	Based on 240 month term Carbon steel Units = 240/36 x 4 x $100 000 = $2 666 666 Installation costs = 240/36 x 4 x $20 000 = $533 330 Total expense: $3 200 000 Stainless steel Units = 4 x $250 000 = $1 000 000 Installation costs = 4 x $80 000 = $320 000 Total expense = $1 320 000 Savings: $2 120 000/20 years = $106 000/year in favor of stainless steel Note: This simple analysis excludes financial discounting and energy losses during installation periods

J. ENERGY EFFICIENCY IMPROVEMENTS

2. MEDIUM TERM OPPORTUNITIES

Description	Cost	Pay-Off
6. Arrange for appropriate qualified staff to attend a short term course in Business Management at an approved or certified institution in the USA or Europe. Objective: To acquaint East European managers with modern business practices, methods, and techniques and to provide the opportunities for useful contacts and bonds with their Western counterparts.	Budget: Assume 2 to 3 month courses and 3 to 5 participants over a two year period at $10 000/month $60 000 to $150 000 (estimated)	Undetermined, but should contribute to and improve refinery organization, efficiency and potentially its profitability.

J. ENERGY EFFICIENCY IMPROVEMENTS

3. LONG TERM CAPITAL IMPROVEMENTS

Description	Cost	Pay-Off
1A. Field & Control Room instrumentation		
Conversion from pneumatic instrumentation to a distributed control system with modern electronic instrumentation. (per 3 process units, approximately)	$1 740 000	2 to 3 years
1B. Custody Transfer Station, Crude Receiving	$ 200 000	
a) Positive displacement meters (12" each 6 meters, includes spares)	$ 350 000	2 to 3 years
b) Transportable meter prover with trailer	$ 550 000	

J. ENERGY EFFICIENCY IMPROVEMENTS

3. LONG TERM OPPORTUNITIES

Description	Cost	Pay-Off
2. Install flue gas boiler expander on FCCU II Note: This project should be associated with the replacement of the reactor shell following 100,000 hours of service	Budget $10 000 000	Power at $0.05/kwh Expected power recovery = 10,000 kw = 10^4 x 24 x 330 x 0.05 = $3 960 000/year Payout = 2.5 years

J. ENERGY EFFICIENCY IMPROVEMENTS

3. LONG TERM OPPORTUNITIES

Description		Cost	Pay-Off
3. Action:	Commission a study to evaluate the refinery needs in modern analytical equipment for the Central Laboratory and modern on-line analyzers.	$5 000	Undetermined
Benefit:	Results in better control to improve energy efficiency and product yield and consistency.		

J. ENERGY EFFICIENCY IMPROVEMENTS

3. LONG TERM OPPORTUNITIES

Description		Cost	Pay-Off
4 Action:	Commission a study to evaluate the best implementation of advance control instrumentation for optimized process operation.	$250 000	To be evaluated
Benefit:	Results in additional control to improve energy efficiency and product yield and consistency.		

K. ENVIRONMENTAL EMISSIONS REDUCTIONS

Opportunities revealed as a result of the environmental review at the refinery and presented in Section I of this report have been costed out and are included with a qualitative estimate of benefits to be derived. Most of the cases studied have capital requirements of magnitudes justifying more definition before commitment.

K. ENVIRONMENTAL EMISSIONS REDUCTIONS

1. IMMEDIATE OPPORTUNITIES

Description	Cost	Pay-Off
1. De-salter interface controller. An excess amount of oil is lost from the desalters. It is believed the interface controls are malfunctioning. If, on further investigation, it is determined the plates or field transformers controls are the cause - the funds could pay for the electrical changes.	4 units @ $15 000/unit - $60 000	Reduce oil loss to sewer by more than 29 tonnes per day

K. OPPORTUNITIES/NECESSITIES AND RECOMMENDATIONS

2. MEDIUM TERM OPPORTUNITIES

	Description	Cost	Pay-Off
2.	Portable dissolved oxygen meter for balancing the recycle sludge to each of the 4 aeration units 1 - Portable dissolved oxygen unit The aerating capacity of the platform turbines is fixed. The oxygen uptake is dependant on the "food" and the amount of activated sludge. To prevent killing the activated sludge the dissolved oxygen should not be allowed to drop below 0.5 ppm.	$800	Reduce the pollution released from the wastewater treatment plant because of better operational control.

K. OPPORTUNITIES/NECESSITIES AND RECOMMENDATIONS

2. MEDIUM TERM OPPORTUNITIES

Description	Cost	Pay-Off
3. Replace existing two lagoon oil removal system with a concrete API separator equipped with float and sludge collection flights.		Reduce volatile organic compound loss Improve oil removal
4 Basins: each 8m wide x 2m deep x 25m long		Reduce oil carry-over to DAF's
Concrete	$300 000	
Chain mechanisms	120 000	Reduce Labor
2 oil pumps	6 000	
4 sludge pumps	32 000	
Covers	26 000	
Vapor condenser	30 000	
	$514 000	
Note: After clean-up, the two lagoons could be used for combined treatment of rainwater. The treated water could be recycled to raw water inlet to use.		

K. OPPORTUNITIES/NECESSITIES AND RECOMMENDATIONS

2. MEDIUM TERM OPPORTUNITIES

Description	Cost	Pay-Off
4. Two cooling tower blocks need to have shock chlorination capabilities. One Unit 100 #/day chlorinator Solution tank Safety Pack Building 4m x 4m Solution feed pump The cooling tower sump currently obtains the Cl_2 solution water via a pipeline from the water treatment plant 1-2 km away. Rate control is uncertain at the cooling tower and at the water treatment plant.	 $10 000 3 000 6 000 3 000 3 000 $25 000 x2 $50 000	Improved efficiency of the cooling tank and heat exchangers because of cleaner heat transfer surfaces.

K. OPPORTUNITIES/NECESSITIES AND RECOMMENDATIONS

2. MEDIUM TERM OPPORTUNITIES

	Description	Cost	Pay-Off
5.	Repair the two wastewater accelerators for the oil removal unit. 2 units @ $20 000 each	$40 000	Accelerator Remove additional oil before the aeration units
	Repair the chain drive at two of the rectangular activated sludge clarifiers 2 chain @ $10 000 2 drives @ $10 000	20 000 20 000 $80 000	Activated sludge clarifiers prevent the re-introduction of pollution to the waste water stream.
	The accelerators were not operating which allowed excessive oil flow to the activated sludge unit.		
	The lack of proper removal of the activated sludge will cause the normally aerobic sludge to become anaerobic. This change to anaerobic condition will release pollution back into the wastewater flow.		

K. OPPORTUNITIES/NECESSITIES AND RECOMMENDATIONS

2. MEDIUM TERM OPPORTUNITIES

Description	Cost	Pay-Off
6. Install 5 new ground water extraction wells 20′ deep, pumps and pipelines to slop tank.		Stop the spread of the ground-water contamination and recover.
Mobilize driller	$2 000	
Demobilize driller	1 500	
5 wells, 6.1 meters each @ $164/meter	5 000	
5 well pumps @ $1 500	7 500	200 - 500 tonnes of hydrocarbon material each year for about 10 years.
5 electric controls @ $2 000 each	10 000	
5 pipe runs @ 164 meters each and $6.10/meter	50 000	
	$76 000	

K. OPPORTUNITIES/NECESSITIES AND RECOMMENDATIONS

3. LONG TERM OPPORTUNITIES

Description	Cost	Pay-Off
1. Excavate blend, stabilize the 65 000 m^3 of waste oily sludge at the centrifuge area. Mobilize/demobilize contractor Stabilize sludge Prepare new disposal site Cover/sample wells The new rotary kiln incinerator will be able to burn the sludge as the refinery generates the sludge. Some excess capacity will be available in the new incinerator to burn some of the sludge in the storage lagoons. If any start-up delays or upset of operating occur, the lagoons will overflow. Therefore, they must be emptied to allow for safe back-up to the new incinerator.	$ 100 000 12 830 600 829 000 20 000 13 779 000	Remove the hazardous sludge from the existing lagoon and provide an empty lagoon for the normal mixing for the new incinerator.

K. OPPORTUNITIES/NECESSITIES AND RECOMMENDATIONS

3. LONG TERM OPPORTUNITIES

Description	Cost	Pay-Off
2. Install flue gas desulfurization at the main power-house Installation O & M Annualized cap @ 7% and 10 years Total Annual Cost Cost/ton SO_2 removed @ 80% removal efficiency 44 000 tonnes x 0.80 = 35 200 tonnes SO_2 removed $\frac{\$12\ 100\ 000}{35\ 200 \text{ tonnes/year}}$ = \$344/tonnes SO_2 removed In the USA the figure of \$1 000/ton (\$1 103/tonne) removed or lower is required to install controls.	\$41 250 000 6 200 000 5 900 000 6 200 000 \$12 100 000	Would remove 35 200 tonnes of SO_2 per year from the local atmosphere.

APPENDIX A. EXTRACT FROM CHARACTERIZATION REPORT

5. MAZOVIAN REFINERY AND PETROCHEMICAL WORKS - PLOCK, POLAND

Address: Mazowieckie Zaklady Rafineryjne i Petrochemiczne
09-403 Plock
ul. Chemikow 7
Poland

Telephone: 53360
Telex: 83341

Contact: Aleksander Puchowicz
Development Director

5.1. Summary Description of Refinery

The Mazovian Refinery and Petrochemical Works (MZRiP) at Plock is the largest of the oil refining and petrochemical plants in Poland. MZRiP, the state enterprise controlled by the Polish Ministry of Industry, was established in 1959. The complex is located on a tract of 710 hectares in the center of Poland near Plock on the Vistula River, about 120 kilometers northwest of Warsaw.

The construction of the Mazovian refining and petrochemical complex began in 1960, and the first refinery products were obtained in 1964. This new complex was designed to meet rapidly increasing demand for fuels, oils, and raw materials for developing a modern chemical industry. Intensive development of Mazovian was continued in several phases until the early 1980's by successive commissioning of new process and auxiliary units.

Over 90 final products are produced by Mazovian refinery. Based on revenue, 90% of the output are refinery products and 10% are petrochemical products. A large volume of the products are shipped to customers by pipeline. Semi-finished products are shipped to other refineries for processing or blending. These products include slack wax, high octane components, cat fractionator bottoms, and lube base stocks. The Mazovian refinery also supplies petrochemical plants with raw materials for petrochemical production.

A block flow diagram of the refinery on shown in Figure No. 6. Table AP-A.1.1, Refinery Units Development, lists each unit and gives the capacity and year of construction. The material balance for 1990 is presented in Table AP-A.1.2.

The Mazovian refining scheme is conventional:

- catalytic cracking of the vacuum gas oils not used for lubes
- hydrotreating and reforming of virgin naphthas
- desulfurization of diesel and jet fuels
- furfural extraction followed by MEK dewaxing for lubes
- asphalt blowing
- H_2S recovery and sulfur production
- alkylation of butylenes not used for MTBE or chemicals.

Four crude processing units (atmospheric-vacuum distillation) provide a capacity of 12.6 million tonnes per year. Three of the units are nearly identical, each with a capacity of 3.4 million tonnes per year. The fourth unit has a capacity of 2.4 million tonnes per year.

Extensive facilities are provided for aromatics and olefin-based petrochemicals. No residual processing for heavy fuel reduction is provided.

Naphtha HDS is integrated with each of the four reformer units. Hydrofinishing capacity is 215 000 tonnes per year for light oil and 140 500 tonnes per year for heavy oil. Crude Unit V was not operational at the time of the site and is not shown in Table AP-A.1.1. Additional information on unit feeds and product yields are given in Section AP-A.9., Table AP-A.9.7.

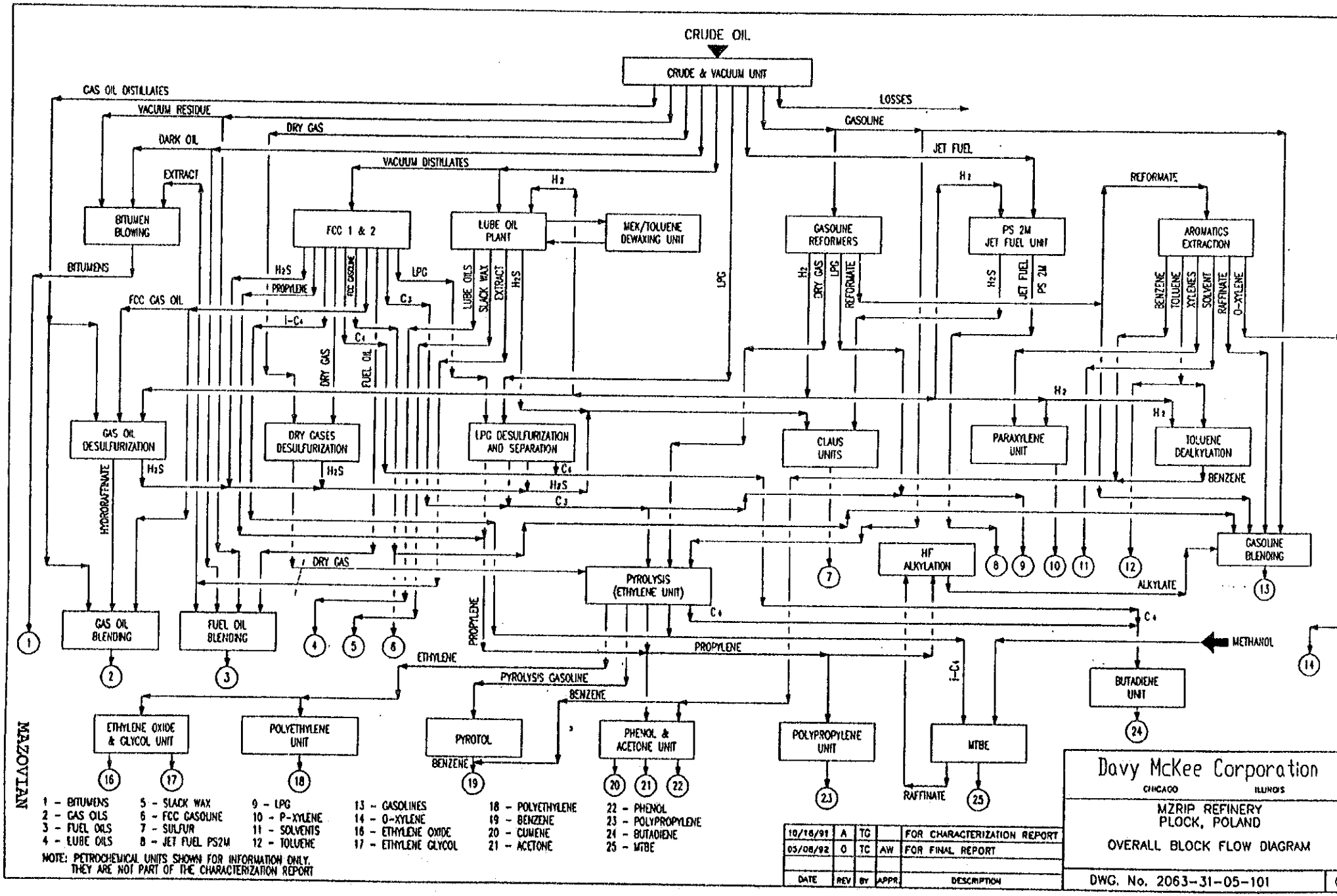
CRUDE OIL
CRUDE & VACUUM UNIT
GAS OIL DISTILLATES
VACUUM RESIDUE
DARK OIL
EXTRACT
BITUMEN BLOWING
BITUMENS
DRY GAS
VACUUM DISTILLATES
FCC 1 & 2
LUBE OIL PLANT
MEK/TOLUENE DEWAXING UNIT
LOSSES
GASOLINE
JET FUEL
GASOLINE REFORMERS
PS 2M JET FUEL UNIT
REFORMATE
AROMATICS EXTRACTION
FCC GAS OIL
PROPYLENE
FCC GASOLINE
LUBE OILS
SLACK WAX
EXTRACT
GAS OIL DESULFURIZATION
DRY GASES DESULFURIZATION
LPG DESULFURIZATION AND SEPARATION
CLAUS UNITS
PARAXYLENE UNIT
TOLUENE DEALKYLATION
BENZENE
TOLUENE
XYLENES
SOLVENT
RAFFINATE
O-XYLENE
HYDRORAFFINATE
FUEL OIL
HF ALKYLATION
ALKYLATE
GASOLINE BLENDING
PYROLYSIS (ETHYLENE UNIT)
GAS OIL BLENDING
FUEL OIL BLENDING
METHANOL
BUTADIENE UNIT
ETHYLENE
PYROLYSIS GASOLINE
ETHYLENE OXIDE & GLYCOL UNIT
POLYETHYLENE UNIT
PYROTOL
PHENOL & ACETONE UNIT
POLYPROPYLENE UNIT
MTBE
RAFFINATE
1 - BITUMENS
2 - GAS OILS
3 - FUEL OILS
4 - LUBE OILS
5 - SLACK WAX
6 - FCC GASOLINE
7 - SULFUR
8 - JET FUEL PS2M
9 - LPG
10 - P-XYLENE
11 - SOLVENTS
12 - TOLUENE
13 - GASOLINES
14 - O-XYLENE
16 - ETHYLENE OXIDE
17 - ETHYLENE GLYCOL
18 - POLYETHYLENE
19 - BENZENE
20 - CUMENE
21 - ACETONE
22 - PHENOL
23 - POLYPROPYLENE
24 - BUTADIENE
25 - MTBE
NOTE: PETROCHEMICAL UNITS SHOWN FOR INFORMATION ONLY. THEY ARE NOT PART OF THE CHARACTERIZATION REPORT
MAZOVIAN
10/16/91 A TC FOR CHARACTERIZATION REPORT
05/08/92 0 TC AW FOR FINAL REPORT
DATE REV BY APPR. DESCRIPTION
Davy McKee Corporation
CHICAGO ILLINOIS
MZRIP REFINERY
PLOCK, POLAND
OVERALL BLOCK FLOW DIAGRAM
DWG. No. 2063-31-05-101

FIGURE 6

Table AP-A.1.1.
Refinery Units Development

Plant	Capacity (tonnes/year)	Year of Construction
Crude Unit I	2 400 000	1964
Crude Unit II	3 400 000	1967
Crude Unit III	3 400 000	1971
Crude Unit IV	3 400 000	1975
Reformer I	300 000	1989
Reformer II	300 000	1967
Reformer III	300 000	1964
Reformer IV	330 000	1971
Diesel Oil HDS I	560 000	1967
Diesel Oil HDS II	600 000	1971
Diesel Oil HDS III	600 000	1975
FCC I	800 000	1966
FCC II	1 500 000	1976
HF Alkylation	150 000	1976
Furfural Refining	400 000	1967
ABT Dewaxing	180 000	1967
Hyrdrofinishing	215 000	1967
Jet Fuel HDS	100 000	1975
Aromatic Extraction	480 000	1969
Distillative Separation of Aromatics	480 000	1969
Low Temperature p-Xylene Separation	32 000	1969
Xylenes Isomerization	60 000	1969
Asphalts Blowing	630 000	1983
Claus Sulfur Recovery	50 000	1971

Table AP-A.1.2 - Material Balance
1990/1991

Input	May	June	July	Aug.	Sept.	Oct.	Nov.	Dec.	Jan.	Feb.	Mar.	Apr.	Total
1.0 Crude	759287	903390	839999	926565	830211	857978	832962	852163	798337	680552	699721	585747	9566912
Crude & Vac. I	29405	215140	223600	231202	215482	229255	223100	228907	208516	167993	139750	0	2132550
Crude & Vac. II	294920	309214	281668	283935	305600	330774	319461	324756	298200	253870	299877	318000	3620275
Crude & Vac. III	149259	128743	321160	321860	27256	0	0	0	0	238689	0	0	1186967
Crude & Vac. IV	285703	250293	13371	89568	281873	297943	290401	298500	291621	0	260094	267747	2627120

Output	May	June	July	Aug.	Sept.	Oct.	Nov.	Dec.	Jan.	Feb.	Mar.	Apr.	Total
2.0 External Sales Production	688977	816351	725640	782331	752401	720421	716556	673484	659201	501491	573384	485168	8097405
2.1 LPG	9449	13700	9324	9464	10019	8191	6265	8103	7124	7601	12275	8749	110264
2.2 I-Butylene	1872	1564	1509	3102	1284	2238	1849	1415	1576	1851	2029	2591	22880
2.3 Gasoline	172945	186692	134691	126070	151285	117895	141255	114352	114493	85742	99998	91441	1536859
2.4 Gasoil	240089	308410	262084	297761	248331	278455	288104	261309	275856	203810	229544	193869	3087602
2.5 Jet fuel	6502	15076	21113	20588	27726	12067	3838	0	0	0	3085	3452	113447
2.6 Fuel oils	148100	205759	170660	204909	180890	147604	133394	171157	166088	126274	138586	105230	1898642
2.7 Lube oils	4951	1710	8827	9761	12931	12055	10738	11839	13745	6875	10320	18	103770
2.8 Asphalt	28429	38374	41879	43747	54844	56469	44924	13533	7505	4275	4213	21546	359738
2.9 Pyrolysis oil	1335	693	2630	11	1239	290	273	1254	521	218	717	-13	9168
2.10 Sulfur	2293	2792	2231	2086	1735	1988	1994	1927	1969	1672	2004	1492	24183
2.11 Butadiene	6484	3884	7859	4392	3633	8516	6822	8592	4459	3259	3530	2882	64312
2.12 Benzene	9491	3194	10671	6348	4018	7993	8468	9934	7277	6642	8013	6205	88254
2.13 Xylene	120	132	659	465	1241	311	280	624	590	374	595	514	5905

Table C.5.1.2 - Material Balance - continued
1990/1991

Output	May	June	July	Aug.	Sept.	Oct.	Nov.	Dec.	Jan.	Feb.	Mar.	Apr.	Total
2.14 O-Xylene	1567	1583	1994	623	170	960	2174	1589	1342	1661	1648	1557	16868
2.15 P-Xylene	1813	1547	3263	891	0	1098	3807	3846	3750	3207	1131	3052	27405
2.16 Special Solvent	1688	2097	2389	529	325	2246	2809	2148	486	838	1203	1004	17762
2.17 Toluene	2450	2061	3109	2396	1302	4049	2714	2352	2442	1696	5328	3498	33397
2.18 Ethylene	8340	2317	3592	5398	4678	6585	7149	8368	3958	7254	7446	5625	70710
2.19 Propylene	7802	1940	5506	8242	5216	7252	6399	8299	6622	6084	6223	5599	75184
2.20 CO_2/Ethylene Mix	3	2	2	0	1	3	2	1	2	1	2	2	21
2.21 N - Hexane	242	245	202	104	142	137	180	145	0	35	0	227	1659
2.22 Special Solvent	336	432	631	586	142	331	387	246	436	294	48	196	4065
2.23 Medicine Naphtha	1	28	0	16	0	187	15	1	15	45	1	37	331
2.24 Solvent Naphtha	214	996	563	1130	512	2753	2538	1528	1210	1165	1327	1183	15119
2.25 Cumen Tar	75	38	39	1	49	146	94	45	92	48	62	46	735
2.26 Phenol Tar	208	227	192	84	446	125	354	124	224	268	251	172	2675
2.27 HC Fraction	387	281	177	132	467	357	326	393	325	378	267	332	3822
2.28 Phenol	2987	2845	1369	1577	2581	3417	3141	3246	3233	2578	2561	2397	31932
2.29 Acetone	1871	1846	925	1089	1872	2219	1956	2181	1866	1714	1617	1590	20746
2.30 Glycol	5530	1787	5696	6845	7564	9094	9982	9021	7275	4400	4446	4345	75985
2.31 Ethylene Oxide	447	492	2256	2061	2341	2132	1510	1504	1790	1137	1690	841	18201
2.32 Polyethylene	12984	6945	10067	11349	10572	13112	12301	12838	13320	11113	12267	9866	136744

Table C.5.1.2 - Material Balance - continued
1990/1991

Output	May	June	July	Aug.	Sept.	Oct.	Nov.	Dec.	Jan.	Feb.	Mar.	Apr.	Total
2.33 Polypropylen	7376	4540	7417	7301	7427	8300	8067	7714	8169	7136	7679	5610	86936
2.34 Slack Wax	584	537	709	1498	2274	1990	1690	1204	1293	1112	1090	0	13981
2.35 Oil for Carbon Black Prod.	0	1133	1329	0	2068	1287	1041	1318	0	1036	1949	0	11161
2.36 Furfural Extr.	0	445	43	1712	3031	-1466	-226	397	0	-262	0	0	3674
2.37 Gaz Petrolent	12	16	53	31	45	25	-11	14	3	4	40	13	245
2.38 Isoprene Fraction	0	0	0	32	0	0	1967	909	115	0	0	0	3023
3.0 Misc. for Internal Consump.	436	121	1088	310	159	291	329	388	563	323	523	195	4726
4.0 Fuels (Total)	108063	80850	107739	88893	95374	117861	118936	132676	126657	119365	107701	88652	1292767
5.0 Wastes	452	311	123	389	158	466	827	609	675	477	350	446	5283
6.0 Production Total	797928	897633	834590	871923	848092	839039	838648	807157	787096	621656	681958	574461	9400181
7.0 Intermediate Products/Internal	-54816	-14569	-11044	40601	-32164	-4291	-16018	31667	-2679	46753	4059	-1364	-13865
8.0 Intermediate Products/External	91	61	137	151	85	0	243	52	63	14	11	85	993
9.0 Production	743021	883003	823409	912373	815843	834748	822387	838772	784354	668395	686006	573012	9385323
10.0 Losses	16266	20387	16590	14192	14368	23230	10575	13391	13983	12157	13715	12735	181589
	2.14%	2.26%	1.98%	1.53%	1.73%	2.71%	1.27%	1.57%	1.75%	1.79%	1.96%	2.17%	1.94%

5.2. Utilities, Services, Offsites

Utilities consumption by unit is summarized in Section AP-A.9., Table AP-A.9.8.

Electricity Generation and Distribution

The local power station is equipped with five electrical generators. Each generator has a capacity of 55 MW (total 215 MW) and feeds the main substations GPZ-1 and GPZ-2 located at the power station. GPZ-1 and GPZ-2 are connected to the state electrical power supply system by means of two separate 110 kV overhead lines. These lines can feed Mazovian with 400 MW total electrical power. The average electrical power consumption is about 310 MW.

Steam Generation and Distribution

Refinery power plant and refinery boilers generate the steam for the process units. High pressure steam after passing through the back pressure extraction turbines is reduced to the required pressures: 0.7 MPa, 1.7 MPa, and 3.5 MPa. The operating characteristics of the boilers mounted in the power plant are given in Section 5.9., Table AP-A.9.1.

The steam provided for the process units is supplied from the central steam system. Power station and boilers supply the steam to the central system. The operating characteristics of the boilers mounted in the process plants are given in Section 5.9., Table AP-A.9.2.

Condensate System

The condensate from the process units, as well as other condensates, is sent to eight condensate collecting stations. Condensate pressure is reduced to 0.6 MPa, 0.25 MPa, or atmospheric pressure. Steam from let-down is sent to the process steam system, used for process unit heating or, in case of the low pressure, to atmosphere.

The condensate from the station is pumped to the condensate collecting system and is sent to the condensate treatment station located inside the power station. The pumps inside the station are automatically controlled by the level in the tanks. The condensate heat is recovered in the condensate coolers before input to the treatment plant. The heat is utilized in heating demineralized water for HP boilers. The treated condensate is used in the same manner as the demineralized water. Some plants (alkylation, fluidized catalytic cracking II) have their own condensate stations.

Fuel Supply

The fuel supply system consists of natural gas, fuel oils, and refinery gases.

Fresh Water Supply

Mazovian is fed with water from two sources: wells and the Vistula River flowing near Plock.

The water coming from wells is aerated, settled, and chlorinated and then distributed as drinking water. The total capacity of wells in use is about 200 cubic meters per hour.

The water coming from the Vistula River is treated and distributed. The water intake capacity is 11 700 cubic meters per hour. The maximum quantity permitted by the government is 7 530 cubic meters per hour. The average used is 4 650 cubic meters per hour. The average consumption of the water taken from the river is about 0.5% (average) of the Vistula River flow at Plock.

Water Treatment and Distribution

The raw water coming from the Vistula River is treated in the water treatment plant. Water usage follows:

Cooling tower make-up water	1 890 m^3/hr
Decarbonized water feeding the demineralizer unit and then power station and steam boilers installed in process units.	1 820 m^3/hr
General service water	850 m^3/hr

Cooling Towers

The cooling water system consists of four cooling tower units serving the refinery and five cooling tower units serving the petrochemical plants. Characteristics of the cooling water system follow:

Water to cooling tower	35°C (avg.)
Water from cooling tower	25°C (avg.)
Water at Vistula River intake	0 - 20°C
Cooling tower design ΔT	10°C

Fire Protection

A refinery fire brigade is on duty around the clock. The fire protection system includes water, foam, CO_2, and a sprinkler system. There are 10 above-ground fire-fighting water tanks with capacities ranging from 300 cubic meters to 1500 cubic meters.

Fire fighting water pump station has a capacity of approximately 900 l/sec and can maintain a pressure up to 1.5 MPa in the fire fighting water system. The stand-by fire fighting water pump station is operated by diesel generator. It has a capacity above 500 l/sec.

Crude Oil Receiving

Crude is received through pipelines.

Product Blending and Shipment

Gasoline blending consists of three separate lines with a total capacity of 800 cubic meters per hour. The monthly production of E-94 leaded gasoline is approximately 130 000 tonnes.

The source components for fuel oil blending are heavy fuel oil and diesel oil. The fuel oil components are stored in heated tanks with a total capacity of 100 000 cubic meters. The diesel oil storage capacity is 15 000 cubic meters. A meter installed in the product line acts as a dousing valve for automatic blending. The blending unit capacity is about 450 cubic meters per hour.

Shipments are made by railroad tank car, tank truck, and pipeline. Railway tanks are loaded at four fully computer-managed loading stations. The total capacity of these loading stations is more than 6 000 000 tonne per year (18 000 tonne/day, 333 days per year).

There are three major product pipelines. One pipeline goes to the Warsaw area and handles about 700 000 tonnes per year. Its capacity is 1 000 000 tonnes per year. A second pipeline goes to the Koluszki area and handles about 1 600 000 tonnes per year. Its capacity is 4 000 000 tonnes per year. The third pipeline goes to the Bydgoszcz area and handles about 1 500 000 tonnes per year. Its capacity is 2 500 000 tonnes per year.

Tank Farm

The storage capacity of the tank farm is summarized in Table AP-A.2.1.

Table AP-A.2.1
Storage Tank Capacities

Product	Roof Type	Capacity (m^3)
Crude	floating	195 000
Gasoline	floating sphere	254 800 24 400
Diesel	cone floating	191 200
Fuel oil	cone	170 000
Jet fuels	cone	50 000
Aromatics	cone	2 000
Lubricating oils	cone	36 000
Feed to catalytic cracker	cone	180 600

Flare, Blowdown, and Dropout System

There are three flares in the refinery. A flare and blowdown system is installed at the crude oil plants, fluid catalytic cracking units, and the platforming and hydrofinishing units.

5.3. Chemicals and Catalysts Use

The usage of catalysts and chemicals for the units of the refinery are itemized for 1990 and 1991 in Table AP-A.3.1. The data for asphalt blowing is for two working furnaces.

Table AP-A.3.1.
Chemicals and Catalysts Consumption (1990 and 1991)

Unit	Unit of Measure	Description	Execution Plan 1990	Execution Plan 1991
Crude Unit I	Kg/t of charge	Corrosion Inhibitor	0.002	0.002
	Kg/t of charge	Ammonia	0.005	0.005
Crude Unit II	Kg/t of charge	Sodium Carbonate	0.02	0.02
Crude Unit III	Kg/t of charge	DEA Soda-Lye Rocamin Corrosion Inhibitor	0.001 0.007 0.0015 0.003	0.001 0.007 0.0015 0.003
Crude Unit IV	kg/t of charge	Soda-Lye Rocamin Corrosion Inhibitor DEA	0.01 0.0015 0.003 0.001	0.01 0.0015 0.003 0.001
Slops Distillation	Kg/t of charge	Soda-Lye 100% Ammonia Corrosion Inhibitor	0.2 0.001 0.006	0.2 0.001 0.006
Furfural Extraction	Kg/t of charge	Furfural Heating Oil Calcinated Soda	1.1 0.06 0.005	1.1 0.06 0.005
Acetone/ Toluene Dewaxing	Kg/t of charge	Acetone Toluene Ammonia	3.5 3.0 0.2	3.5 3.0 0.2
Hydrofinishing Lube Oils	Kg/t of charge	DEA Co-Mo Catalyst Ceramic Balls	0.03 0.035 0.001	0.03 0.035 0.001
Hydrofinish-ing Jet Fuels	Kg/t of charge	Co-Mo Catalyst Ceramic Balls	0.029 0.00155	0.029 0.00155
Gas Oil Blending	Kg/t of charge	Depressant for Gas Oil Z-20 Z-35 Z-40 II-Country II-Export	 0.15 0.53 1.27 0.08 0.3	 0.15 0.53 1.27 0.08 0.3
Asphalt Blowing	Kg/t of charge	Tribasic Sodium Phosphate PP-1 Catalyst	0.0015 0.009	0.003 * 0.009

* for two working furnaces

5.4. Previous 12-Month Operating History

5.4.1 Recent Modifications

An economizer generating medium pressure steam was installed on one of the catalytic reformers. This substantially improved fuel efficiency.

Several changes are planned to the flow scheme of the refinery and to the units included. The major changes planned are discussed below.

The sulfur content of residual fuel oil is a particularly difficult problem for the Mazovian complex. To solve this problem, crudes processed will be limited to those crudes from which product specifications can be met in the existing facilities. In addition, a unit (capacity = 930 000 tonnes per year) will be built to desulfurize catalytic cracker feed; this unit will also improve the yields on the catalytic cracking unit. Studies have been made of the economics of adding a hydrocracker to produce low sulfur products. Adding flue gas desulfurization so that high sulfur residuals could be burned in the power plant without exceeding environmental limits has been considered.

To enable the refinery to produce a higher octane gasoline, a 65 000 tonnes/year MTBE unit will be built using isobutylene from the steam cracking and catalytic cracking units.

Lube capacity, yields and energy efficiency will be improved by adding a new MEK-toluene dewaxing unit. Also, the lube hydrofinishing unit will be revamped.

A new continuous catalytic reformer (UOP-CCR) is under construction with completion scheduled in 1993. Design octane will be 103-104 RON clear. This unit will replace two old platforming units. Octane quality of the gasolines will be improved by this change.

The two platformers scheduled to be removed from service will be used for other purposes. One of the units will be converted to C_5 isomerization. All of the reforming units operate on attached feed hydrotreater.

Polish law limits the operation of pressure vessels to 100 000 hours of operations before certain items of equipment must be replaced. One of the four platformers was revamped to meet this requirement and an economizer was added to the hydrotreater-reformer to improve energy efficiency. An expander is being considered for the Number 2 catalytic cracker. This will generate about 6000 kw of very low cost power.

5.4.2. Crude Oil Supply

The ability for the Mazovian refinery to receive crude oil from the USSR by pipeline or to receive international crudes such as the North Sea, Middle East, etc. by pipeline from the Baltic port of Gdansk insures a crude supply to the refinery, but is limited by commercial and political considerations. The crude charged to the refinery during the last 12 months has been entirely USSR Romashkino crude of 32.5°API. This crude has a sulfur content of 1.4 weight percent. The Romashkino crude properties are summarized in Section AP-A.9, Table AP-A.9.9.

Crude is pumped from the USSR to Adamow base located on the Poland-USSR border. Storage capacity of Adamow base is 600 000 cubic meters. From Adamow base, crude is pumped into refinery storage and to the Plebanka base with capacity of 630 000 cubic meters (plus 200 000 cubic meters available after tank restoration). From Adamow base, crude is also pumped to the Schwecht refinery in Germany. Plebanka base also receives crude from Gdansk refinery terminal.

To store the crude oil, the refinery possesses a tank farm consisting of 7 floating roof tanks with total capacity of 195 000 cubic meters. These tanks are fed with crude oil by pipelines from Plebanka terminal.

5.4.3. Operating Experiences

A material balance for the last eight months of 1990 and the first four month of 1991 is shown in Table AP-A.1.2. The crude charge for this period is 9 566 912 tonnes. This compares with a capacity of 12 600 000 tonnes per year.

The crude charge rate has not been limited by crude availability but has been limited by the market for products. The market for fuel products has been adversely affected by the tax structure; the tax structure permits products to be imported at a price lower than the refinery price.

No forced shutdowns occurred during the twelve month period. However, since full capacity of the refinery was not required, capacity was adjusted by shutting some units down completely rather than operating each at partial capacity. This leads to high maintenance cost and high product losses. Units should be operated at a steady rate to avoid shut-downs.

5.4.4. Impact of Crude Oil Changes

The refinery is capable of processing a wide range of crudes. With its current crude source, the refinery produces a full line of saleable products. In addition, it supplies feedstock for the petrochemical plant.

One way to evaluate an existing crude unit for a new crude or crude blend is to simulate the unit for the existing operation and establish the capabilities and bottlenecks. Then, the new crude feedstock is simulated to find the operating conditions, product rates, pumparound duties, flash zone conditions, crude heater duty, crude column tray loadings, and the capacities of the downstream equipment. All this is done by using sophisticated process simulation software and appropriate high speed computers. It is important to select proper thermodynamic and physical properties to perform the simulation.

DMC performed a simulation on the refinery crude tower. For details see DMC Evaluation and Audit Report, Appendix F.

5.4.5. Impact of Product Market Changes

Most products from the Mazovian refinery are sold through the governmental organizations now responsible for most product marketing in Poland. Private product distributions systems are now being developed; however, the percentage of products marketed through these organizations is minimal.

The Mazovian distribution area is determined by transport cost and product requirements. The Gdansk area supplies the northern region of Poland and five small refineries supply part of the area south of Krakow. In addition to the finished products, Mazovian supplies semi-finished products to other refineries as follows:

- Catalytic cracked gasoline to all refineries as a high octane gasoline component
- Lube base stocks to all southern refineries for the blending and sale as finished lubes
- Slack wax to southern refineries for processing to finished paraffin products

- Catalytic cracker fractionation bottoms to Jaslo refinery for carbon black production

- High octane blending component to other refineries when the MTBE unit is completed.

Overall, the Mazovian refinery supplies the following percentages of products to Poland.

Motor Fuels	80%
LPG	80%
Lubricating oils	80%
Asphalts	65%
Ethylene	90%

A new refinery is being considered for southern Poland. If this refinery is built, it would cut into the market for finished products from the Mazovian refinery.

5.4.6. Impact of Legislation and Social Change

Currently, the impact of the legislative and social changes toward a market oriented economy is being evaluated. These changes are expected to profoundly change the mode of operation of the refinery.

5.5. Environmental Considerations

5.5.1. Quality of Local Environment

The refinery is located near the city of Plock where the atmosphere is polluted with industrial emissions. The refinery emits sulfur dioxide above acceptable amounts.

Water is taken from the Vistula River. The water is high in dissolved solids.

5.5.2. Current Emission Controls

Liquid Waste

The following water drainage systems are available:

- storm water drainage
- oily water drainage
- oily and chemically polluted water drainage

- waste water system for the waste water coming from power station and demineralizer.
- sanitary waste

The waste water is gathered after treatment in a common collector and sent to the Vistula River at about 87 000 cubic meters/day. The characteristics of the waste water directed to the Vistula River are given in Table AP-A.5.1.

Table AP-A.5.1
Waste Water Characteristics

Concentration	September-March	April-October
ChZT (COD)	<230.0 mg/dm^3	<210.0 mg/dm^3
suspended material	<80.0 mg/dm^3	<75.0 mg/dm^3
phenol	<0.3 mg/dm^3	<0.2 mg/dm^3
pH	6.5 - 9.0	6.5 - 9.0

Solid Waste

The refinery is confronted with the disposal of the following sludges:

- water treatment sludge
- waste biological sludge
- fluid bed incinerate
- oily waste tank/basin bottoms
- oily waste from chemical coagulation
- FCC fines and spent catalyst
- contaminated excavated soil

The water treatment sludge is hauled off for agricultural use. The waste biological and some oily sludge is processed in the fluidized bed incinerator. The ash from the incinerator cyclones is currently being used as a road building admixture. Some of the tank bottom oily sludges are being used as a foundation for road building. No tests as to the leachability before or after use were available.

The plant currently does not have an acceptable disposal of the spent catalysts from the FCC units. At one time a metals plant was taking some of the materials but have since stopped taking any. The plant is currently spreading the dust and spent catalyst with the oily sludge in a lagoon. These lagoons are to be eliminated when sufficient incineration capacity is available.

The spent caustic from the FCC caustic wash unit is currently collected and transported to a nearby paper mill. The caustic and sulfur content is used in the sulfite paper making process.

Gaseous Waste

The major problem with gaseous effluents is the sulfur dioxide content of the refinery gas which is directly related to the amount of liquid fuel used and its sulfur content.

5.6. Refinery Specific Potential and Opportunities for Improvement

The major improvement which can be made to Mazovian operations is to increase the cut point of the heavy vacuum gas oil to reduce residual yield. This additional gas oil could probably be processed in the existing catalytic cracking units with little or no revamp. Possibly some provision could be made for low conversion hydrocracking in the catalytic cracking feed hydrodesulfurization unit which is planned; this would provide for some conversion of the additional gas oil.

The higher cut point can be achieved by reducing pressure drops in the transfer line and tower of the vacuum unit, by increasing the flash zone temperature, or by adding more dilution steam. Increasing the cut point of the heavy atmosphere gas oil would reduce pressure drops in the vacuum tower system. The flash zone temperature should be increased to near the point of incipient cracking. Another step would be to remove trays from the vacuum towers which are not needed for lube production; this would also save utilities.

An alternate to reducing the amount of lube cuts is to increase the sale of lube base stocks to the southern refineries. To do this, some redesign of the new dewaxing plant capacity might be required.

The vacuum residual should be further processed by visbreaking, deep solvent deasphalting or coking. The additional gas oils and lighter products produced could be desulfurized and blended back to produce residual fuel oil of lower sulfur content. Coking or flexicoking is an option for vacuum residual processing. With Flexicoking a fluidized bed gasifier is [illegible]rated in the process and low sulfur,

low Btu gas is produced. If coking were used, it could be followed by a fluidized bed combustion system which would provide heat with very low sulfur emissions. A fluidized bed combustor is being considered for the refinery, and the process is now well developed.

To provide hydrogen for additional hydroprocessing, facilities to recover hydrogen from hydrogen rich gas should be considered.

Studies should be made of utilizing part of the top reflux duty of the crude towers. Usually 15-20 kcal per tonne of crude can be picked up with the reflux; no heat recovery is obtained at the refinery. Mazovian crude preheat temperatures are about 40°C less than for a well designed unit. The preflash tower which is provided in the crude units could be used more effectively. Very little vaporization now takes place in the preflash tower.

Other process improvement possibilities are discussed in the evaluation report for this refinery.

The power consumptions of the fluid catalytic cracking unit are much higher than those of the units which have expanders. An expander is now planned for the largest catalytic cracking unit.

The hydrodesulfurizers and catalytic reformers use much more fuel than the reference units. Heat recovery to furnace preheat and economizers to reduce the flue gas temperature would reduce fuel consumption. One of the hydrotreater-reformer combustions has been revamped to add an economizer for steam production; similar opportunities exist in the other units.

In most cases, streams from the crude unit are cooled with water instead of being transferred to the next unit at the prevailing temperature. The units are spread over an area of about 1.5 square kilometers. To provide proper insulation for the streams and provide for expansion could make this change uneconomical. Economic studies of the conditions are needed.

5.7. Refinery Specific Problems and Trends

This topic is included in the discussions presented under Sections 5.4., 5.5. and 5.6.

5.8. Reference to Data Base

The information contained in the questionnaire has been formatted into a computerized data base, which is the subject of a separate report.

5.9. Supporting Plant Data

Table AP-A.9.1	Power Plant Steam Generation
Table AP-A.9.2	Process Plant Steam Generation
Table AP-A.9.3	Gasoline Properties
Table AP-A.9.4	Liquefied Petroleum Gases (LPG) Properties
Table AP-A.9.5	Diesel Fuel Properties
Table AP-A.9.6	Fuel Oils Properties
Table AP-A.9.7	Process Units Yields
Table AP-A.9.8	Utilities Consumption - Refinery Plan for 1991
Table AP-A.9.9	Romashkino Crude Properties

Table AP-A.9.1.
Power Plant Steam Generation

Boiler Type	Quantity (pcs)	Capacity (tonne/hour)	Pressure (MPa)	Temp. (°C)
00420	4	420	13.5	540
00320	3	300	13.5	540
00220	1	200	4.5	420
0K0 60	2	55	1.8	270

Table AP-A.9.2.
Process Plant Steam Generation

Boiler	Quantity (pcs)	Capacity (tonnes/hour)	Pressure (MPa)	Temp. (°C)
V-109	4	4.5	1.76	205
V-511	1	2.4	1.76	205
A-23 - A-27	5	7.4	0.98	194
E3	1	3.0	0.59	170
XU-540-40	1	7.2	1.67	200
T3	1	17.0	1.19	190
00 - 0891	1	135.0	37.20	426
01 - E6	1	10.7	2.00	208

156

Table AP-A.9.3.
Gasoline Properties

Type	Regular	Premium
Octane Number		
RON	86	94
MON	80	84
Distillation, volume		
10%	70	70
50%	125	120
90%	185	185
EP	215	215
Distillation, residue, %wt	1.5	1.5
RVP, KPa		
winter	50-80	50-80
summer	40-70	40-70
Sulfur Content, %wt	0.15	0.15
MTBE Content, %vol	---	---
TEL Content, g/dm^3	0.56	0.3

Table AP-A.9.4.
Liquefied Petroleum Gas (LPG) Properties

Composition	Propane	Propane Butane,LPG
Vapor Pressure		
-15°C	0.20	0.049
40°C	---	---
70°C	3.04	2.55
C_3 min. %wt	90	18.0
C_4 min. %wt	---	45.0
C_5 min. %wt	---	1.0
Total Sulfur ppmw, %wt	0.0050	0.0050

Table AP-A.9.5.
Diesel Fuel Properties

Type	IL	IZ-20	IZ-35	IZ-40	II
Distillation, Volume 50% 90%	 290 90	 280 90	 280 95	 280 95	 --- 60
Viscosity, mm^2/s, 20°C	2.8-8.0	2.4-6.0	2.4-6.0	2.7-6.0	7.5-19.0
Pour Point, °C	---	-12	-20	-30	---
Flash Point, °C	40	40	40	45	60
Sulfur Content %wt	0.6	0.6	0.6	0.3	1.2
Ash, %	0.01	0.01	0.01	0.01	0.015
Water/Sediment, %vol	---	---	---	---	0.3
Cetane Number	45	40	45	40	---
Carbon Residue, %	0.2	0.2	0.2	0.01	---
Acidity, mg KOH/100 cm^3	8	8	5	5	---
Jodine Number, gJ/100g (max)	---	---	6	6	---

Table AP-A.9.6.
Fuel Oil Properties

Type	III
Density	0.975 gm/m³
Viscosity, 80°C	122
Freezing, °C (max)	+25
Flash Point, °C (min)	110
Sulfur Content %wt	3.0
Ash, %wt	0.20
Net Heat of Combustion kJ/kg	39 700
V Content, ppm (max)	150

Table AP-A.9.7
Process Units Yields

CATALYTIC CRACKING	UNIT #1	UNIT #2
Feeds	**% yield**	**% yield**
Fraction		
ULE J 11		0.99
P-13		5.0
P-12		2.5
P-22		12.6
P-23		13.4
P-31		49.6
P-41	76.3	15.9
P-21	23.7	0.01
TOTAL	100.0	100.0

Products	**% yield**	**% yield**
Dry gas, sweet	3.5	4.5
H_2S		1.2
Dry gas, sour		
LPG, sour	8.3	
Propane		1.5
Propylene		3.5
Fract. C_4 light		5.0
Fract. C_4 heavy		2.4
Gasoline	44.0	48.2
Diesel 1 FCC I	27.0	
Diesel 2 FCC I	2.1	
Diesel FCC II		19.6
Oil for carbon blk.		1.7
Slops	0.1	0.1
Loss + coke	5.0	4.8
Fuel oil FCCI	10.0	
Fuel oil FCC II		7.5
TOTAL	100.0	100.0

Table AP-A.9.7. - continued
Process Units Yields

CATALYTIC REFORMING A = aromatics; G = gasoline								
Unit	1		2		3		4	
Feeds	A	G	A	G	A	G	A	G
Fraction								
A-11	31.5		35.8		28.4		33.9	
A-12								
A-21	42.4		30.8		47.2		40.7	
A-22				5.9		2.5		
A-23	12.4		11.7		12.4		12.9	
A-32								
R-33	2.0			65.3	5.2	49.3		5.6
R-43	11.7		21.7	28.8	8.8	48.2	12.5	94.4
A-51								
TOTAL	100.0		100.0	100.0	100.0	100.0	100.0	100.0

Products	A	G	A	G	A	G	A	G
dry gas	2.0		2.0	2.0	2.0	2.0	3.5	3.5
H_2 rich gas	7.0		7.0	6.0	7.0	6.0	6.5	6.5
LPG	10.0		10.0	7.5	10.0	7.5	9.0	5.0
reformate	80.0		80.0	83.5	80.0	83.5	80.0	84.0
slop	0.01		0.01	0.01	0.01	0.01	0.01	0.01
losses	0.99		0.99	0.99	0.99	0.99	0.99	0.99
TOTAL	100.0		100.0	100.0	100.0	100.0	100.0	100.0

Table AP-A.9.7. - continued
Process Units Yields

FURFURAL		LUBE HYDROFINER		ACETONE-TOLUENE	
Feed	**% yield**	**Feed**	**% yield**	**Feed**	**% yield**
Fraction					
P-12	48.8	dewaxed oil	98.0	rafinate	99.9
P-13	39.9	H_2 rich gas	2.0	extract, heavy	0.1
P-22	10.8				
P-23	0.5				
TOTAL	100.0		100.0		100.0

Product	% yield	Product	% yield	Product	% yield
rafinate	56.0	hydrofinate	96.4	dewaxed oil	80.5
extract, light	27.0	fuel gas	1.1	slack wax	9.6
extract, heavy	16.6	H_2S	0.1	oil II	9.6
loss	0.4	slop	1.4	loss	0.3
		loss	1.0		
TOTAL	100.0		100.0		100.0

Table AP-A.9.8
Utilities Consumption - Refinery Plan 1991

Unit	Plan Production Tonne/yr	Specific Energy Demands				Total Energy Demand kcal/t
		Fuel kcal/t	STEAM kg/t	ELEC kwh/t	CW m3/t	
ATM/52% Lube VAC						
I	2077000	180380	56.0	4.8	8.0	235900
II	2970059	181316	74.0	5.9	6.5	251176
III	2801517	210030	120.0	6.0	7.5	312930
IV	2151424	205580	139.0	8.2	7.5	327060
TOTAL	10000000					281630
Hydrotreater/ Platformer						
I	279900	769800	148.1	45.0	25.0	989270
II	195000	769800	148.1	41.0	25.0	986870
III	247454	769800	148.1	41.0	25.0	986870
IV	128350	755800	111.1	42.0	23.0	955370
TOTAL	850704					982907
Gas Oil Hydrotreater						
Jet	71715	142200	129.6	9.2	21.0	267600
GO I	1466010	60970	55.6	14.0	14.0	141890
GO II	34838	60970	55.6	14.0	14.0	141890
GO III	(IN GO I)	60970	55.6	14.0	14.0	141890
TOTAL	1572563					147623
HF Alkylation	73253	385680	129.6	41.0	116.0	644400
Fluid Cat Cracking						
I	354055	601930	55.6	62.0	32.0	808850
II	1465054	808770	47.1	28.0	17.0	938040
TOTAL	1819109					912896

Table C.5.9.8 - continued
Utilities Consumption - Refinery Plan 1991

Unit	Plan Production Tonne/yr	Specific Energy Demands				Total Energy Demand kcal/t
		Fuel kcal/t	STEAM kg/t	ELEC kwh/t	CW m3/t	
Blending						
Gasoline	1579917	0	18.5	1.0	0.0	15350
Jet	140000	0	18.5	0.0	0.0	12950
Diesel	3391295	0	40.7	0.5	0.0	29690
Fuel oil	1745281	0	42.6	1.0	0.0	32220
TOTAL	6856493					26688
Sulfur Plant	27763	1397000	-5181	68.0	0.0	-2066500
TOTAL FUELS	21199885					
Lube Operations						
Furfural	272550	453860	333.3	20.0	30.0	753170
Dewaxing	154273	0	1463	110.0	49.0	1317500
H'finishing	123117	152400	148.1	8.5	25.0	291470
Blending	122140	0	222.2	0.13	0	155852
TOTAL LUBES	672080					689578

Table AP-A.9.9.
Romashinko Crude Properties

Crude Inspection	
Gravity °API	32.5
Sulfur wt%	0.86
Pour Point °F	1.4
Viscosity, cs at 40°C	7.7
Conradson Carbon, wt%	5.4
Asphaltenes & Resins, Vol.%	1.5
Metals, Ni + Va, ppm	-
Gasoline C-405°F (C_5-207°C)	
Yield, Vol %	22.1
Sulfur, wt%	0.1
Octane, F-1, 3 ml TEL	-
Light Gas Oil, 405-650°F (207-344°C)	
Yield, vol %	28
Gravity, °API	38
Sulfur, wt%	0.5
Pour Point °F	-4
Characterization Factor	-

Table AP-A.9.9. - continued
Romashinko Crude Properties

Heavy Gas Oil, 650-1000°F (344-538°C)	
Yield vol%	27
Gravity °API	36
Sulfur wt%	1.5
Viscosity, cs at 50°C	19
Wax content wt%	6
Characterization Factor	-
Residium 1000°F PLUS	
Yield vol%	23
Gravity °API	16
Sulfur wt%	1.8
Viscosity, cs at 210°F	109

USAID

TERMS OF REFERENCE

DESCRIPTION/SPECIFICATIONS/WORK STATEMENT

Component #2: A PETROLEUM REFINERY EFFICIENCY IMPROVEMENT ENERGY CONSERVATION PROGRAM

1. BACKGROUND

The petroleum sectors of Bulgaria, Czechoslovakia, Poland, Romania, and Yugoslavia (as well as that of Hungary) are emerging from a 40-year period of centrally-planned crude supplies and centrally-controlled markets. Practically all of the petroleum refineries in these six countries were built, or modernized, during this period.

Among the five countries, it appears that Bulgaria has three separate refineries having an aggregate throughput of 300,000 B/D; Czechoslovakia has seven aggregating 455,000 B/D; Poland nine with an aggregate throughput of 385,000 B/D; Romania thirteen aggregating 617,000 B/D; and Yugoslavia seven with an aggregate capacity of 609,135 B/D. Now, these refineries face changing circumstances.

First, it is likely that the existing refineries were designed to process a narrow slate of crude oils supplied from the USSR. Now, crude supply options have broadened so that supplies can be bought on the world market through spot and contract purchases. The USSR appears to be phasing out as a primary crude supplier to these countries. Accordingly, potential future crude oil slates can have a much broader range of physical and chemical characteristics than has heretofore been the case.

Second, market conditions for the refinery product slates have been based on the principles of a centrally-planned national economy. Expectations, because of the shift to democratic pluralism in these countries, are for a higher standard of living for the populations, for a greater awareness of the need for environmental protection, and for shifts in refinery-product slates that will occur because of these. The capabilities of the mix of processing units in the refineries in each country to adjust simultaneously to changing crude slates and product slates will be brought into question.

Third, greater public awareness of preserving environmental quality and of the environmental deterioration that has occurred during the past forty years are likely to force major changes in refinery design and operating practices to reduce noxious gaseous, liquid, and solid waste emissions. This awareness is likely to emphasize production of unleaded gasolines and alcohol additives, and perhaps also the exploration of neat alcohol and compressed natural gas alternatives. At the same time, changes in refinery operations will be demanded to reduce noxious emissions to the extent practical.

Finally, tightened economic conditions will force refinery managements to improve operations through introducing more efficient internal utilization of energy and through implementing opportunities for energy conservation. These improvements will have to occur while anticipating changing crude and product conditions and with an inventory of processing units in the refineries that in all likelihood has a limited flexibility to adapt to changes. The roles for alternative fuels could emerge here also.

Compounding the problem of managing change are shortages of foreign exchange, increases in foreign exchange demands because of purchase of crude oil supplies on the open market at now greatly increased price levels, and demands on investment capital that will be generated by the political and economic changes in these countries. Foreign investment by international oil companies in petroleum-sector investment opportunities could bring needed foreign exchange and could potentially lead to new refinery construction at strategic locations and the scrapping of some existing refineries.

The complexity of the relationships within the petroleum sector system is somewhat illustrated in Figure 1 of this Appendix.

Obviously, managing the process of change will take some time. The inputs for analysis are not yet completely available. Economic benefits will depend on national policies, formed or as yet unformed. The current crude supply and pricing picture is an unstable one. Foreign investor interest in the five countries probably varies among the countries and perhaps is not yet well focused on the petroleum sector.

Nevertheless, a start in an analysis to improve the situation can be made provided the focus of initial efforts is on a rationalization of the petroleum-system situation in each of the five countries. Rationalization intends (a) efficient, effective, and environmentally-acceptable improvement in the production of petroleum products to serve current domestic markets, (b) adaptation of current operating practices to serve emerging domestic markets from expected, cost-attractive, crude-oil slates, and (c) identification of the improvements in terms of consistency with the privatization policies in each of the five countries.

2. GOAL AND OBJECTIVES

Accordingly, the generic goal of the work is to begin a process that ultimately can lead to such rationalization of the petroleum sectors in each of the five countries. The end results for the work at this time are

a. an organized data base comprising available data and information relevant to producing inputs for later use by others (when sufficient data and information for the

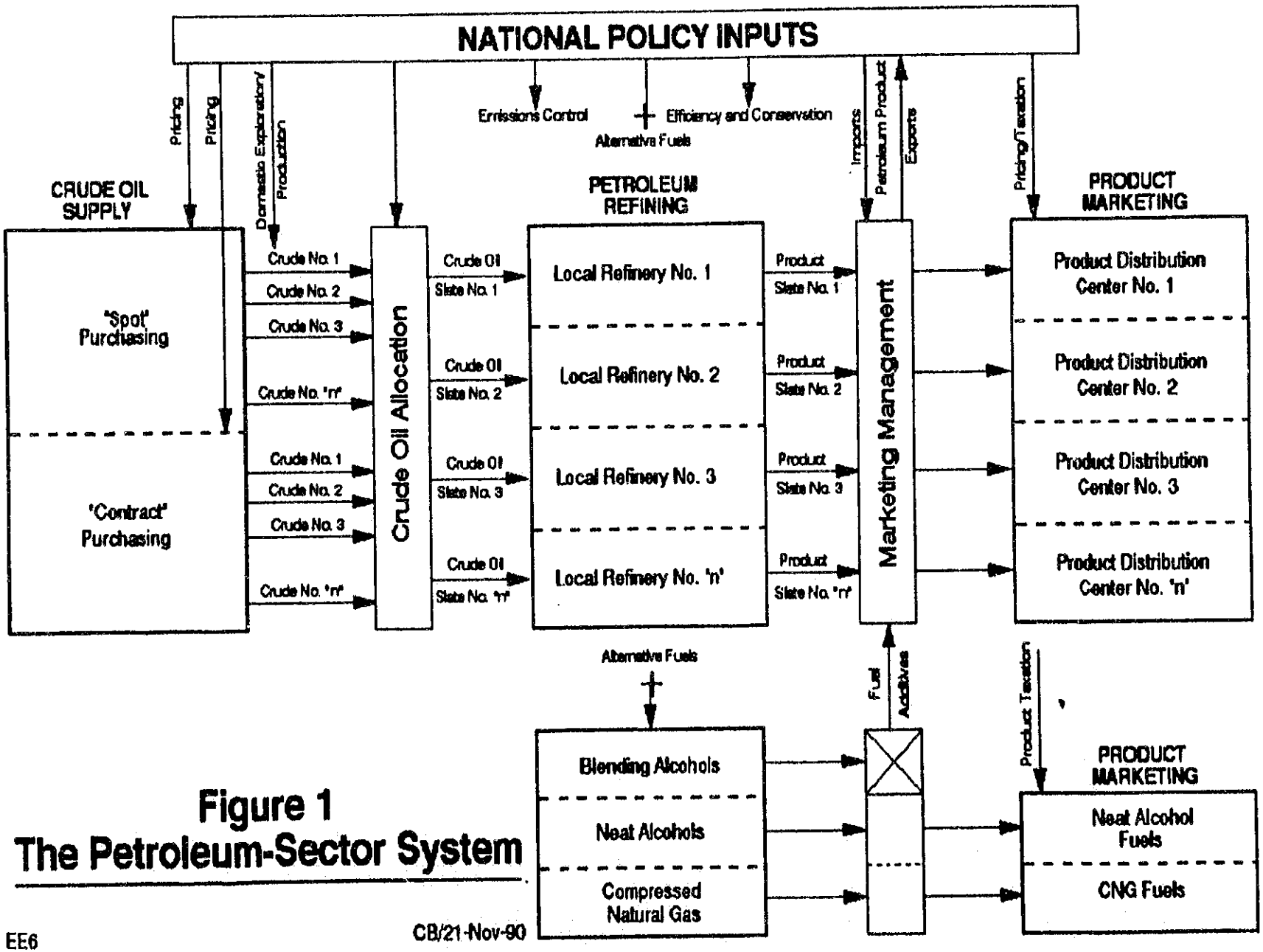

Figure 1
The Petroleum-Sector System

EE6

CB/21-Nov-90

various components of the petroleum system, such as is shown in Figure 1, become available) in a commercial linear programming model to optimize the petroleum system in each country,

b. low-cost improvements in the energy efficiency and environmental impact of selected refineries producing the current product slates that have been implemented during the course of the Contractor's work, and

c. the identification of further improvements which can only be implemented at a later time by others through making a significant investment that needs to be justified.

Accordingly, the objectives of the work focus on the five countries and are

a. for the refinery sector in each country and to the extent that relevant information is available, to describe the process mix in each refinery, the technical capabilities, and current operating practices in a form that (1) provides a data base for undertaking further and future work by others aimed at optimizing the petroleum system in each country and (2) more specifically for the present, enables at least qualitative judgments to be made of effects of changing crude-oil slates on refinery product slates;

b. for a sample of two refineries each in Czechoslovakia, Poland, and Yugoslavia and one refinery each in Bulgaria and Romania, to identify changes in operating practices and low-cost modifications to equipment that can be immediately implemented to increase the efficiency of energy utilization, to conserve energy by avoiding unjustified use, and to reduce as far as practical undesirable gaseous, liquid, and solid effluents;

c. for the same refinery selection in each country, to identify, characterize, and recommend more-extensive changes in practices and equipment and modifications to the process units, which appear justifiable but at the same time require further study possibly with inputs that may not yet be available; and

d. to assist the management of each refinery selected in each country, as needed, in the implementation of the changes identified in b. above through on-the-spot assistance (including training sessions for refinery personnel).

3. APPROACH

This work statement is intended to be generic and applicable in each of the five countries. The intent is to undertake the work with two separate teams of specialized personnel operating in parallel. One team will undertake the work in three countries sequentially and the other in the two remaining countries sequentially. The two teams will be supported as appropriate by a home-office team. The work of the three teams will be coordinated by a program director.

In order to permit pragmatic planning for efficient accomplishment of the work, the first activity will be a reconnaisance in the five countries, probably lasting five weeks, during which needed technical and administrative inputs will be developed and needed local support arranged for. In order to gauge the effectiveness of the work, the final activity will be return visits to the five countries, probably over a two week period when the final reports have been submitted, for the purpose of discussing the results and answering questions that may arise.

The expectations are that considerable data and information will be collected for the countries and for the operating oil refineries. Also, expectations are that this data base, aside from the needs of the Contractor's work program and even after the completion of his work, can provide continuing inputs to other efforts aimed at improving operations in the non-refinery components of the petroleum-sector system (see Figure 1) or to follow-on efforts aimed at implementing the longer-term improvement opportunities identified in the work. Therefore, data and information collection is to be computer oriented with programs organized to be user-friendly and documented accordingly in the Contractor's final reports.

Furthermore, in the identification of improvement opportunities relevant to achieving the objectives of the work, expectations are that benefit/cost estimates will be prepared and/or evaluations performed as far as practical. Estimates and calculations will, with little doubt, require assumptions to fill in for a lack of data. Therefore, estimate preparation and evaluation of opportunities is also to be computer-oriented and user-friendly with programs designed to permit asking "what if" questions, with documentation incorporated in the Contractor's final reports.

Petroleum refineries and petrochemical manufacturing plants are closely linked both physically and through refinery products that become petrochemical feedstocks. The work shall be confined to petroleum refineries only. For this purpose the refinery shall be defined as comprising all

installations that pertain to the receipt of the crude oil through to processing and storage of the refinery's primary products. A primary product shall be defined as one that has been fully processed so as to be marketable. On-site facilities to blend different gasoline streams, produce, and process them to final specifications are refinery units. Refinery gas and/or liquid streams that are delivered to other units for further processing, such as to ethylene, ammonia, or aromatic extraction, are to be considered as finished products.

Equipment purchases (both for test work and for permanent installation) needed for the implementation of short-term improvements shall be defined and justified. A brief report shall be submitted for A.I.D. approval before committing to purchase.

4. TASKS

The following tasks are foreseen for the work.

a. Refinery Characterization

The work is technically oriented. It involves preparing for each refinery in each country, a block flow diagram showing the processing units and the support facilities between receipt of the crude oil slate and the dispatch of the product slate to market. The depth of detail for this characterization will provide

1) a description as far as practical of the capability of each processing unit in terms of feedstocks and feedstock variability and product yields and specifications; of the operating conditions, age, mechanical condition of the processing units; of the consumption of utilities (electricity, water, catalysts, chemicals, etc.); and of the quantities and characteristics of the effluents.

2) a description as far as practical of the support facilities in terms of crude and product storage capacity, fire protection and personnel safety provisions, and methods for segregation, collection, treatment, and disposal of solid, liquid, and gaseous effluents.

3) a written operating history of a refinery for the previous 12-month period emphasizing crude-oil receipts and specifications, product slates produced, unusual operating experiences, routine maintenance performed, and emergencies encountered during operations.

4) a description of the method of electricity supply, whether entirely purchased, self-generated, or a combination of both; and a technical description of the design and operation of the power house (if any) in terms of energy balance and heat rate.

b. Refinery Financial Structure

The objective in this task will be to collect data on local practices from the refinery management and/or from other appropriate sources that can be evaluated to establish the basis whereby the cost of each improvement opportunity can be pragmatically estimated and attractiveness of the opportunity determined. The expectation is that attractiveness will be based in part on (a) the magnitude of the capital requirement, including the foreign exchange component, and (b) the period of time within which the cost of the improvement can be recovered through savings in operating costs achieved. Attractiveness shall refer also to quantification (if practical) of benefits from reduced emissions of objectionable effluents. No need exists to relate emissions for compliance with any existing standards.

c. Selection of the Refineries

The refineries to be subjected to more detailed study, in order to meet Objectives b, c, and d above, shall be selected during the reconnaisance period by mutual agreement between the Contractor and the host-government agency concerned. For Contractor's guidance, the main criterion for selection should be based on achieving a maximum efficiency/environmental improvement impact for a minimum effort and cost in a minimum time frame. However, the selection shall be subject to A.I.D. concurrence.

d. Refinery Housekeeping

For each country and for each selected refinery, the work involves observation over a period of time of the refinery operations in order to detect opportunities to improve operating and maintenance practices, such as by

1) eliminating the presence of leaky valve-stems and steam traps,

2) incrementally insulating excessively hot surfaces,

3) avoiding poor combustion conditions (high oxygen content in chimney gases because of excessive excess air beyond combustion needs and/or leaky furnace settings),

4) avoiding excessive carbon monoxide in chimney gases (poor combustion, inadequate mixing of fuel and air),

5) increasing the frequency with which heat transfer surfaces are cleaned of fouling deposits,

6) reviewing whether rotating machinery is adequately maintained in terms of lubrication and condition of bearings, and

7) reviewing whether plant instrumentation is adequate and/or well-enough maintained to provide accurate readings of operating conditions and is appropriately configured to permit efficient operation.

e. Heat Conservation

The work involves observations over a period of time to evaluate the adequacy of provisions to recover heat that otherwise is wasted. The best example is a lack of airheaters to recover heat from hot chimney gases in refinery furnace equipment. Another example is the design of feedstock preheat heat exchanger trains and the opportunity to introduce an additional heat exchanger that can be justified now because of higher energy prices.

f. Process Unit Operating Conditions

The work involves analyzing the operating conditions and control systems installed for each processing unit in a selected refinery in order to determine whether these are appropriate for the products from the feedstock. This analysis can be particularly significant if current feedstocks and/or product slates have changed from the conditions on which the original design of the processing unit was based.

g. Refinery Energy Balance

The work involves analysis of the flows of energy among the different processing units comprising each selected refinery as well as within the processing units themselves in order to identify opportunities for energy-efficiency improvement in the short term and long term.

The analysis should attempt to provide a data base to assist others to foresee the longer term opportunities for a more efficient energy balance through review of the market demand, future crude oil supplies, and the design and applicability of the processing units themselves. Ultimately, the product of such analysis by others could be decisions to abandon certain units, modify others, or add new units, all providing for greater thermal efficiency.

Accordingly, the Contractor shall attempt to foresee as far as practical the prospect that such future analysis could invalidate the benefits perceived for an identified long-term opportunity from a presumption that a substantial remaining useful life for the process unit exists.

h. Fuel Switching

For each selected refinery, the work shall include comment and expert opinion on the practicality of replacing petroleum hydrocarbon fuels with indigenous coal. Refinery furnaces have in the past been fired with coal. Fuel switching to coal to save on oil imports could be a viable option. However, the Contractor shall focus on a different technical option for coal utilization, in order to reduce investment, by considering high fuel-density, coal/water slurry fuels as a direct replacement for fuel oil with minimum retrofit. Sootblowers could handle the higher ash content.

Consideration of such an option should be limited to assessing its practicality in terms of coal supply and characteristics, the state-of-the-art of fuel formulation, and adaptability to existing combustion equipment.

i. Refinery Emissions

For each selected refinery, the work involves preparing a survey of all solid, liquid, and gaseous refinery effluents in terms of sourcing, probable quantities, and chemical analyses, and suggesting practices to be employed in the refinery for control to reduce such emissions that reflect experiences elsewhere where emission control laws are in effect. There is no need to relate this task to showing compliance of emissions with standards that may be established by the World Bank or the U.S. Environmental Protection Agency.

j. Data Evaluation

The work involves computer-oriented organization of the data and information collected, evaluation of the data and information, compiling cost estimates, performing financial calculations, ranking opportunities in terms of the adopted criteria, and preparing final reports to meet the objectives of the work.

C. INSTRUMENTATION

As indicated in Section F, conversion of the existing control system to a distributed control system (DCS) requires considerable capital. The approximate cost of the 1st stage of conversion is $1 740 000. This is an estimate summary which has accuracy of -15 to +50%. All costs and expenses are based on U.S. costs. Therefore, such items as labor costs in Poland and prices of exported and Polish made products may change the estimate significantly.

The estimate is based on the following basic items:

1. Distributed Control System is Honeywell TDC-3000 with the following capabilities:

   200 analog inputs, 100 analog outputs, 200 digital inputs +24 Vdc, and digital outputs with dry contacts. All loops will have redundancy. It will have 3 operator stations, all required related units and two switchable uninterrupted Power Supplies (UPS).

2. All field transmitters are Rosemount regular P and dP transmitters (Smart transmitters are + $100 each). The Rosemount instruments were selected because they will be produced in Poland. However, Rosemount smart transmitter may not be 100% efficient in combination with the Honeywell TDC.

3. Average length of the field wire pair is 300 m, and 30 m in the control building.

4. Twenty dP transmitters will have chemical seals with capillaries.

5. It is assumed that the thermocouple extension wires will run directly from the field to DCS.

6. The DCS (with the above parameters) will be able to run three to five process units and monitor temperatures in several more units.

7. Cost of air conditioning is not included.

8. American refinery experience shows that an average conversion to DCS pays off in about two years. However, since conversion to DCS at Mazovian should involve total conversion of the field instrumentation, wiring, etc and also due to significantly different economic circumstances in Poland, the actual pay off time may differ significantly.

ELECTRICAL EVALUATION OF MAZOVIAN REFINERY

Abbreviations

PDE	Substation Podolszyce (Power Company)
PLO	Substation Plock (Power Company)
GPZ	Main Substation
GPR	Zone Substation
OPR	Zone Branch Substation
SZR	Auto-On Spare Feeder
SPZ	Auto-On Secondary Spare Feeder

A. SERVICE ENTRANCE AND MAIN SUBSTATION

1. The Mazovian Refinery and Petrochemical Works at Plock, Poland is fed from two independent power sources owned by the Power Company:

- PDE Substation at Podolszyce (12 years old)
- PDO Substation at Plock (3 years old)

By four 110 Kv (power rating short circuit 1500 MVA) overhead lines.

2. The electrical power supply to the complex is very reliable and stabilized and does the following:

- provides two independent sources
- provides two overhead lines from each source
- provides backup feeders (from each source) which are suitable to feed two transformers simultaneously through a tie switch.

3. Main Transformers

3.1. Four transformers 110/30 kV, 75 MVA each, provide power to the complex from the State owned Power Company. All transformers are designed to supply 100% spare power load.

4. Main Substations (GPZ)

4.1. Four 30 kV main substations (manufactured in Poland), GPZ-1A, GPZ-1B, GPZ-2A and GPZ-2B, distribute power to both the refinery and petrochemical facility. Each main substation is equipped with two sets of busses. Each substation is interconnected through the tie switches that in turn can be fed from any one of four transformers. In addition, substations are fed from local power station, having five generators rated 55 MW each. The condition and maintenance of the substations are very good.

5. Power Distribution

5.1. Distribution of 30 kV power from main substations to zone substations is through underground aluminum cables. Cables are sized for 100% spare load. The system is resistor grounded.

6. Zone Substations (GPR) - 30/6.3 kV

6.1. There are eleven zone substations, with two feeders each, are as follows:

- Refinery Total 5
- Petrochemical Total 4
- Maintenance Total 1
- Water Supply Total 1 (at River Wisla)

These substations are equipped with two transformers 30/6.3 kV. Each transformer is sized for 100% spare load.

For critical equipment an additional feeder from a third source of power is provided.

6.2. The spare feeder from the third source of power is automatically switched by a two step operation.

1st step	0 to 1.0 sec.
2nd step	1.0 to 1.5 sec.

180

6.3. Switching from one power source to a second or third is done using a simultaneous feed from two sources (0.5 sec.) with an acceptable phase space.

7. Grounding System

7.1. An equipotential network is connected with a General network system complex which is 0.5 Ohm (as required by Polish code) and is periodically measured.

7.2. The resistance of the lightning system is accordance with the standard (Polish code -10 Ohms). The system is connected as a whole.

8. Managing of Reactive Power

8.1. Present Condition

Reactive power compensation requirements are affected by:

- Cable feeders at 30 kV and 6 kV.
- Capacitors connected on the refinery plant 0.4 kV system. Increasing capacitor bank installation throughout the complex would increase generated kVars.
- Synchronous drives (where the power factor = 1.0) at the petrochemical plant only. kVars can be genereated by over-exciting to full load current.

8.2. In the settlement of accounts between the complex and the Power Company, an average power factor of 90% is used.

8.3. The refinery complex has an agreement between the Power Company to:

- Purchase electrical energy from Power Company (see attached tabulations, pages 15 and 16). Summarized power consumption by refinery from May 1990 through April 1991.

- Sale of electrical energy to Power Co. from Refinery Power Plant (see attached tabulations, page 16).

- The complex pays monthly for reactive power only when average power factor falls below 90%.

8.4. As a penalty for used energy the complex is paid:

- in 1990 - 4 500 million zlotys
- in 1991 - 5 000 million zlotys

Due to the above, the Engineering Bureau "Biproproject" did a study of "Reactive Power at the Complex" in Plock. The study when finished came up with three alternates. The complex selected alternate #2 as the most economical for the following reasons:

- It does not require new buildings/rooms. Adequate space is available in the existing substation rooms.

- Compensation of reactive power shall be at 6 kV only.

- Quick completion of project. The work will be done at ten 6 kV substations (5 refinery, 4 petrochemical, 1 common). The water supply "Vistula" substation is excluded due to the long cables (feeders).

- Existing capacitors on the 0.4 kV system will remain.

8.5. Each future capacitor bank shall have four elements. One element of each bank shall be connected continuously and the other three shall be manually turned on/off to meet demand requirements. Once during each shift (three time a day) electrical operators will check the power factor reading.

8.6. Currently, due to the high kVar penalty cost, the main concern at Mazovian Refinery is to install capacitor banks in the 6 kV system.

9. Present Condition of the Electrical Equipment

9.1. Main Substation

Electrical system start-up was in 1963, refinery start-up was in 1964, with the refinery processing 6 000 000 tonnes/year. Now the refinery processes 12 000 000 tonnes/year, with a maximum capacity of 14 000 000 tonnes/year. The main feeder entry (110 kV) with 30 kV system was reconstructed 10 years ago.

GPZ-1 Reconstructed
GPZ-2 New

One spare main transformer 20 MW 30/6kV is available at the plant in case of emergency.

9.2. Underground Feeder System

Each feeder cable was assessed in terms of:

- age
- number of splices by damage
- number of faults in a period of 10 years

Half of the feeder cables will be replaced by year 2000.

9.3. Present Condition of Substations

All zone substations ("GPR") were manufactured in Poland including the transformers. The most used are GPRI-1, GPR-2 and GPR-0. GPR-1 is now 50% reconstructed and is expected to be 100% completed in 1991.

GPR-2 and GPR-0 will be reconstructed by 1993.

Reconstruction includes:

- Replacing aluminum bus with copper.
- New electronic protection
- Grounding point "0" at the 6 kV level through a resistor
- Branch disconnects from import (domestic not available) power.

All zone-branch substations ("OPR") are domestic and in good condition.

The total number of substations at the 110 kV, 30 kV and 6 kV levels is 80.

9.4. Central Electrical Control Room

A central electrical control room with graphic type control panel and a computerized system is under construction. The graphic display will include the 110 kV, 30 kV, 6 kV and 0.4 kV systems.

10. Energy Consumption and Billings

Energy prices charged to the refinery by the Utility Power Company (May 23, 1991) are as follows:

- An annual charge for specified energy of 120 000 ZL/kW. Due to the fact that the refinery is fed by four feeders (at 110 kV) from two independent sources (good stability); a multiplier factor of 1.8 is used.
- Monthly payment: (120 000/12) x 1.8 = 18 000 ZL/kW.
- Monthly payment for demand energy = 18 000 ZL/kW.
- Monthly payment when calculated energy is over specified energy 100 000 ZL/kW for first 15 min - 100 000 ZL/kW each next 15 min - 10 000 ZL/kW).
- Cost for used active power:

Peak time (morning and evenings)	260 ZL/kWh
Day time	160 ZL/kWh
Night time	90 ZL/kWh

- Cost for reactive power when the power factor is below 90%:

Peak time (morning and evenings)	60 ZL/kVARs
Day time	60 ZL/kVARs
Night time (9pm to 6am)	35 ZL/kVARs

- Cost for maintenance of energy meters = 228 000 ZL/meter

B. POWER HOUSE

1. Generators

Five generators produce 55 MW each at the 10 kV level. Generator data is as follows:

MANUFACTURER:	Skoda - Czechoslovakia
TYPE:	746378/2 air/water cooled
MFG YEAR:	1964 thru 1972
POWER:	55 MW
VOLTAGE:	10.5 kV
CURRENT:	3.75 KA
RPM:	3000
EXCITATION:	By two exciters rated 280 kW and 2.5 kW.

2. Transformers

Large transformers, of domestic manufacture, oil cooled (used mineral oil, no PCB) are as follows:

63 MVA, 33/10.5 kV	TB-1 thru TB-5
16 MVA, 31.5/6 kV	TPO-1 thru TPO-5
10 MVA, 10.5/6 kV	TZ-4 and TZ-5
6.3 MVA, 10.5/ 6 kV	TZ-1 thru TZ-3

Small transformers 6 kV/0.4 kV, 500 kVA thru 1000 kVA are also of domestic manufacture, both oil cooled and dry type.

3. High and Low Voltage Distribution Equipment:

List of 6 kV substations/MCCs:

RPO-6 and RW6	for power plant use only
RD6	water system
RB6-1 thru RB6-7	zone substations
RK6	boiler 220 t/h

List of 380 V motor control centers:

R-8	fuel pumps for boilers
RB-1 thru RB-7	zone MCCs
R-1 and R-9	for power plant use only
R-4 and R-5	lighting

All the substations and motor control centers are of domestic manufacture and are partially equipped with connecting devices of foreign make (Swiss, Austrian and Czechoslovakian). They were built between 1962 and 1990.

4. Motors

Nearly all the motors are of domestic manufacture. The biggest motors (4MW and 3.5MW) are powered at the 6 kV level and are air and water cooled. The medium size motors (320 thru 580 kW) are also powered at 6 kV and are air cooled. Small motors, altogether about 2500, are powered at 380V. All motors are AC, 3 phase, induction. There are no variable speed motors at the refinery.

All motors are controlled from the main control room and have local pushbuttons. Motors 10 kW and larger are equipped with ammeters. The simple induction motor construction has helped insure minimal operational problems.

5. Lighting

Generator room, boilers and outdoor lighting are mainly mercury and sodium type. Smaller rooms are fluorescent and incandescent type.

6. Grounding

The power stations have their own ground grid, tied into both substations GPZ-1 and GPZ-2 grids. At the 380V level, a "nulling" system has been applied.

7. Power station problems

Economy improvements and environmental matters are two areas of concern at the power station.

7.1. Installation of speed control should be considered for the induction motors used for boiler feed pumps and demineralized water pumps. Pump capacity control by means of valve throttling, which is used at present causes excessive energy losses. These losses would be avoided by implementing variable speed control. Lack of hard currency now makes it impossible to buy and install variable frequency drives.

7.2. There are applications for distributed control systems for controlling operation of the boilers heated with vacuum residue. At the current condition of boiler control, operation of the boilers economically and in an environmentally friendly way is impossible. Excessive energy losses and rapid wear of the equipment (corrosive) and increased discharge of polluting substances to atmosphere (such as sulfur dioxide and nitrogen oxides) are experienced. Computerized operation of the boilers could significantly reduce these negative influences.

8. Control Voltage

The 220V direct current source is powered from 560 Ah batteries, a total of four, which are buffered with rectifiers. The 220V DC is used for instruments, emergency power, and the control system.

C. DISTRIBUTION SYSTEM

1. Feeders

A "radial" system of distribution is used at Mazovian Refinery. At the 30 kV, 6 kV and 0.4 kV level, feeders from two independent sources are used. All feeders including the transformers are 100% oversized. The 6 kV and 0.4 kV power sources are equipped with an automatic transfer switch from a third source of power (SZR).

For very important drives at the 6 kV level, the refinery is installing (under construction) a third feeder from a third source of power. This feeder will also be used for emergency and maintenance purposes. All feeders at the 30 kV and 6 kV level are underground cables except for one which is a 30 kV overhead line feeding the water intake from Vistula River.

All cables are aluminum and manufactured in Poland.

All transformers rated at 30 kV and 6 kV are the oil cooled type, domestic manufacture except 6/0.4 kV transformers at the butadiene unit which are manufactured in the USA (PCB problem).

2. Zone Substations and MCCs

All zone substations and motor control centers are of domestic manufacture, except for the Butadiene unit whose motors were manufactured in the US. Currently, the butadiene unit is out of service due to a lack of product sales (rubber industry).

3. Grounding System

The electrical ground grid, equipment grounding and lightning protection are according to Polish National Code. The grounding resistance is periodically checked.

4. Lighting System

4.1. Road Lighting

The road lighting is mixed: fluorescent, mercury and low pressure sodium. To conserve energy only intersections and railroad crossings are lighted. Lights on straight roads have been turned off. Photocells (not time clocks) are used to turn lights "on" at dusk and "off" at the sunrise.

4.2. Fence Lighting

Fence lighting (about 19 kilometers long) are fluorescent except at the gates where mercury is used. The lights are operated by photocell.

4.3. Process Units Lighting

Mercury and incandescent lighting is used on process units. During the night, the only lights turned "on" are where service is required. Lights are turned on/off manually by local switches.

D. PROCESS UNITS

1. Cooling Towers

The refinery has four cooling tower units. Each unit is equipped as follows:

Unit no. 1	22 fan drives
Unit no. 2	23 fan drives
Unit no. 3	18 fan drives
Unit no. 4	19 fan drives

Each fan drive is 55 kW, 1460 RPM, 380 V, 3 phase 50 Hz. Control is by thermostats with local and remote (at control room) start/stop button stations. All drives are single speed.

NOTE: As an experiment, existing metal blade propellers were replaced by fiber glass propellers and a 30 kW motor was sufficient to operate the fan.

2. Crude Units (Atmospheric and Vacuum Distillation)

The five crude units (DRWs) contained:

10	6kV zone substations
24	0.4kV distribution panels
48	motor control centers 0.4kV
26	electrodehydrators
1 460	electrical motors
11 000	lighting fixtures

All the electrical equipment (i.e. zone substations, distribution panels, motor control centers, push buttons, etc.) are of domestic manufacture and are in good condition.

Motor feeders and the control installation to push button stations are done by cable in cable trays. Motors are operated locally. Control for the 0.4 kV motors is designed for automatic restart at up to 3 seconds of power outage. All driven process equipment, i.e. pumps, compressors, etc., is one-on-one spared.

General Notes:

- Mercury type lighting (90%), incandescent type (10%).
- Two pumps on DRWIII #N20A and N20B are 315kW at 6 kV instead 240 kW at 6 kV due to a lack of 240 kW motors.
- Almost all electrical equipment (i.e. push buttons, pull boxes, lighting fixtures, cable trays, metal jackets on cables, etc.) shows damage from sulfur corrosion.

3. Reforming Units

The high and low voltage electrical equipment is of domestic manufacture and is in good technical condition. All process equipment, such as pumps and compressors, are one-on-one spared.

Reforming I was revamped in September 1990.

Operation staff comments on 6 kV motors and observations during operation:

- Gas compressor:
  Item no. (total 2)
  MCE102 A & B

Power rating	2600 kW
Rated current	290 A
Current at max gas disch.	110A

- Compressor
  Item no. (total 2)
  MCE101 A & B

Power rating	380 kW
Rated current	40 A
Current at max load	27 A

- Gas Oil HDS
  Compressor
  Item no. (total 2)
  MCE202 A & B

Power rating	670 kW
Rated current	78 A
Current at max load	45 A

As can be seen from these comments, the motors were overrated during design and after revamping of unit (reduction of pressure) the power utilized by them decreased. This helps explain the low power factor.

4. Catalytic Cracking Units

4.1. FCC II is fed by four transformers rated at 6.3/0.4 kV, 1600 kVA each. The 6.3 kV substations are of domestic manufacture and are in very good condition. The 0.4 kV motor control centers are GEC ELLIOT (English). They lack data nameplates and spare parts.

For correction of power factor at the 0.4 kV level, four capacitor banks (6 x 40 KVAR each) are installed.

Aluminum cables in cable trays are used for power distribution between the motor control center and the motors.

At FCC unit #2 there are 56 drives

44 motors @ 22kW, 1460 RPM
8 motors @ 17kW, 1460 RPM
4 motors @ 13kW, 1460 RPM

The above mentioned motors drive pumps and fin-fans coolers.

Motors which drive oil pumps (total 10) are both locally and remotely controlled, the other motors are local controlled only. Local stations included: start/stop, ammeter and a disconnect switch.

The FCC II is a relatively new unit, being constructed in 1976.

It is difficult to operate the fans without automatic air stream control. At present this is done pneumatically by changing blade position for following motors:

22 kW	Total:	21 (additionally forward-reverse)
22 kW	Total:	6
17 kW	Total:	4
13 kW	Total:	2

Fans with manually changing blades positions are as follows:

22 kW	Total: 6
22 kW	Total: 1 (additionally forward-reverse)
17 kW	Total: 4
13 kW	Total: 2

All of the above mentioned motors were manufactured by CelmaCieszyn (Poland). The use of variable frequency drives (speed control) could facilitate operations and reduce energy consumption.

NOTE: Before making a final decision, information from the motor manufacturer (CelmaCieszyn) should be obtained to determine if the present motors are suitable to be operated by variable frequency drives (VFD) (ventilation, temperature, etc.).

4.2. The FCC Unit I was designed by and its equipment supplied by the USSR in 1965. The old process has since been modernized. There are 20 motors at 30 kW, 980 RPM on the unit, which drive fans. They also will benefit from variable speed control (as at unit #II). An expansion is foreseen in 1992/93, with 20 motors at 30 kW, 980 RPM being installed. They also would benefit from variable speed control.

5. Heat Tracing

Electric heat tracing cables are used in the power house only on lines requiring freeze protection.

On the process units, steam is used for lines requiring temperature maintenance and/or freeze protection.

6. General Notes:

6.1. Each motor at the refinery has a "Record Card" onto which all repairs, maintenance and tests are recorded.

6.2. The larger items of electrical equipment have a "passport" onto which repairs, maintenance and tests are recorded.

6.3. On an hourly basis the following is recorded:

- Main feeder line loading
- Tie with national grid, power flow
- Generated energy by refinery power plant
- Power factor.

6.4. Every three months, each electrical staff employee attends training classes on:

Single line and schematic diagrams
Substations and MCC
Equipment and motors.

Test and grades are recorded on personnel cards.

6.5. Electrical Staff at Refinery

Process Units:

Administration	58
Operators	333

Maintenance Facilities:

Administration	74
Workers	232

6.6. The electrical maintenance and repair done by the refinery staff is about 98% utilizing their own resources.

6.7. The budget for the electrical repairs at the refinery is 2% of the Mazovian refinery's repair budget.

Power Plant Summarized Electrical Energy Consumption

(All numbers are in kWh)

Item No.	Description	1990								1991			
		May	June	July	August	Sept	Oct	Nov	Dec	Jan	Feb	March	April
1	Total Production	68560000	54728000	59720000	55992000	68216000	86960000	102928000	115568000	119992000	125264000	106032000	77552000
2	Internal Use Only	12896800	10121200	12677800	11096200	11508400	15634200	16353400	18305200	17930400	16669800	17586404	14096800
3	Losses in Zone Trans-formers	342800	273640	298600	279960	341080	434800	514640	577840	599960	626320	530160	387760
4	Total Internal Use (2 + 3)	13239600	10394840	12976400	11376160	11849480	16069000	16868040	18883040	18530360	17296120	18116564	14484560
5	Internal Use for Steam Production	10884600	8521904	10966400	9467160	9575480	13164000	13328040	14955000	14542360	13286120	14157564	11629560
6	Internal Use for Energy Production	2355000	1861000	2010000	1889000	2274000	2905000	3540000	3928000	3988000	4010000	3959000	2855000
7	Production Netto (1 7)	66205000	52867000	57710000	54103000	65942000	84055000	99388000	111640000	116004000	120254000	102073000	74697000
8	For Refinery 1 (2 + 3)	55320400	44333160	46743600	44615840	5636520	70891000	86059960	96684960	101461640	107967000	876986640	63067440
9	Energy from National Grid	42891140	41456816	49492223 8	48257606	32350964	27905546	20876064	19266080	3621016	160462	2369688	10808360
10	Sales to National Grid	641000			73000	364000	3017000	11433000	18652000	9430000	25610000	12973000	2705000

Table 6.7.1 - Power Plant Electrical Energy Consumption - continued

Item No.	Description	1990								1991			
		May	June	July	August	Sept	Oct	Nov	Dec	Jan	Feb	March	April
11	Subcon-tractor @ Refinery	1039643	1051245	1088262	953385	1100015	1123505	1227479	1108415	1131393	1088583	1061424	929253
12	Billed Energy (8 + 9) 10	97570540	85791976	96235838	92800046	88353484	95779546	95503024	97299040	95652650	82516362	77315528	71170800
13	Complex per Meters	96470400	8389000	92045400	91774500	87011700	96233700	95809800	97804200	96177300	81169200	81004800	70086600
14	Difference (12 13)	1100140	1962976	4190438	1026146	1341784	454154	306776	505160	524644	1349162	3689272	1084200

List of Capacitor Banks Installed at Medium & Low Voltage Substations

Item No.	Name of Substation	MCC No. and Compartment Where Capacitor Banks are Installed	Capacitor Size kVAr		Type
			Beginning	Actual	
1	S-6	RNN 1 SEC 1	120	56.7	LKC
2	S-6	RNN 1 SEC 2	120	119.2	LKC
3	S-6	RNN 2 SEC 1	120	114.5	LKC
4	S-6	RMM 2 SEC 2	120	117.1	LKC
5	S-8	RNN 2 SEC 1	120	119.1	LKC
6	S-8	RNN 2 SEC 2	120	118.3	LKC
7	S-8	RNN 1 SEC 1	120	122.5	LKC
8	S-8	RNN 1 SEC 2	120	117.6	LKC
9	S-10	RNN 1 SEC 1	120	117.5	LKC
10	S-10	RNN 1 SEC 2	120	116.8	LKC
11	P3/10	RNN 1 SEC 1	120	117.0	LKC
12	P3/10	RNN 1 SEC 2	120	118.4	LKC

List of Capacitor Banks Installed at Medium & Low Voltage Substations

Item No.	Name of Substation	MCC No. and Compartment Where Capacitor Banks are Installed	Capacitor Size kVAr		Type
			Beginning	Actual	
1	S-4	RNN SEC 1	60	56.7	LKC
2	S-4	RNN SEC 2	60	59.0	LKC
3	P2/4	RNN SEC 1	60	57.6	LKC
4	P2/4	RMM SEC 2	60	59.4	LKC
5	P3/4	RNN SEC 1	60	58.1	LKC
6	P3/4	RNN SEC 2	60	57.3	LKC
7	P1/5	RNN SEC 1	240	228.3	LKC
8	P2/5	RNN SEC 1	60	57.2	LKC
9	P2/5	RNN SEC 1	60	58.5	LKC
10	P1/6	RNN SEC 2	240	245.7	LKC
11	P1/6	RNN SEC 2	240	228.2	LKC
12	P2/10	RNN SEC 1	240	246.7	LKC
13	P2/10	RNN SEC 2	240	246.0	LKC

List of Capacitor Banks Installed at Medium & Low Voltage Substations

Item No.	Name of Substation	MCC No. and Compartment Where Capacitor Banks are Installed	Capacitor Size kVAr		Type
			Beginning	Actual	
1	S-1	RNN 1 SEC 1 0,4 kV	240	219.2	LKC
2	S-1	RNN 1 SEC 2	240	232.3	LKC
3	S-1	RNN 2 SEC 1	120	114.3	LKC
4	S-1	RNN 2 SEC 2	120	118.1	LKC
5	S-2	RNN 1 SEC 1	120	112.4	LKC
6	S-2	RNN 1 SEC 2	120	120.3	LKC
7	S-2	RNN 2 SEC 1	120	113.3	LKC
8	S-2	RNN 2 SEC 1	120	120.0	LKC
9	S-10	P4/10	240	218.1	LKC
10	P1/5	RNN SEC 2	240	239.5	LKC
11	P4/10	MCC 0,4 kV	240	217.0	LKC
12	GPZ	R 6 kV SEC 1&2	900		LKC
13	GPZ	R 6 kV SEC 3&4	900		LKC
14		Total capacitors at low voltage	5040		
15		Total capacitors at medium voltage	1800		
		Total	6840		

APPENDIX E REFINERY ENERGY BALANCE AND "ENERGY DEMAND" CRITERIA

To properly undertake an appraisal of the energy efficiency of Eastern European Refinery operations, it was clearly apparent that some standard measure of the performance of typical modern U.S. refinery installations was essential. A literature search revealed two documents describing typical energy consumptions in the U.S. refining industry based upon surveys and energy audits as follows:

> R.V. Elshout, Barnard and Bunk Engineers and Constructors Inc., Pasadena California, Hydrocarbon Processing, July 1982, Pg. 109.
>
> R.O. Pehlam and R.D. Moriarty, Profimatics, Inc., Thousand Oaks, California, Hydrocarbon Processing, July, 1985, Pg. 51.

The 1982 article lists typical utility requirements for a range of common refinery processing units, whereas the 1985 article analyzes the thermodynamic elements of energy usage for a typical 80,000 BPSD fuels refinery. These two references assessed U.S. refinery energy performance from 1972 through the early 1980s - during which period the U.S. refining industry had recorded energy utilization improvements of about 25%.

By convention, volumetric and the English system of measurements, (barrels, API, BTU's, etc.) are still preferred by U.S. refineries whereas mass and the metric or System International units (grams, metric tons, specific gravity, joules, kilocalories, etc.) are commonly used in Europe. Therefore, it is necessary to establish equivalent values between the two methods of measurement so that equitable comparisons can be made. The typical U.S. refinery unit energy demands provided by Elshout have therefore been transformed from American to European practice as shown in the following Tables 1-3 by the provision of typical API gravities (where appropriate) for the unit feedstocks.

A direct and positive comparison of total energy demands between similar unit operations is still not possible, however, due to the individual refiner's selection of electric or motive steam for the provision of mechanical power and also to the selection of cooling water or air as the sink for rejected heat. Consequently, suitable conversions to the basic fuel oil energy source were required and are shown in Figure 4, in both the European and American usages. It is believed that our selected efficiency factors of 80% for steam generation; 35% for power generation; and 60% for combined pump with motor driver are reasonable or conservative in deriving the selected conversions to fuel oil equivalence in order to obtain a common, simple and effective, measure of total energy demand.

In a further attempt to extend and update the validity of these data, the most recent publication of refinery unit licensor information (Refiner's Notebook - "Hydrocarbon Processing", November, 1990) was selected to reflect technical and

economic trends, together with other available information, to supplement lube oil energy demands. A consolidated listing of the results is shown in Tables 5 - 13.

Finally, Table 14 attempts a reconciliation of the "Unit Total Energy Requirements" chosen from the above-cited development and based upon Elshout, with the overall typical fuels refinery energy usage reported in the Profimatics survey. The predicted results of 378,455 versus 380,000 BTU/BBL required by the "reasonable efficient fuels refinery" cited in the Profimatics example provides reasonable assurance for the general validity of the methodology, even though it is claimed that improvements are continuing at the rate of 1-2% per year.

For convenience, Table 15 summarizes the "Refinery Unit Energy Demand Criteria" selected as best representing expected and obtainable refinery practice under current technical knowledge and economic pressures. These values were used for the overall assessment of the Polish energy efficiency of refinery operations.

In conclusion, it is well to recognize that in these selected energy demands, the potential for a further 15-20% reduction in energy usage could be technically/economically feasible by prudent retrofitting in the existing plant, but more likely in applying modern design techniques to future energy efficient installations where proper long-term economic criteria are both encouraged and applied.

TABLE 1[8]
USA
TYPICAL REFINERY UTILITY USAGE
****
PER 1000 BPSD CAPACITY EXCEPT AS NOTED

	TYPICAL 'API	FUEL FIRED M BTU/H	18 °F dT CW GPM	POWER KWH/H	STEAM LB/H	SURFACE FT2
CRUDE	25.0	2500	375	10	333	1200
	40.0	3330	500	13	250	1000
VAC DISTILLATION	16.0	2100	410	15	1250	2000
VISBREAKER	9.0	8000	240	15	1250	
THERMAL CRACKER	9.0	20000	2000	31	1900	
DELAYED COKER	9.0	9120	830	50	1450	
FLUID COKER [1]	9.0	-250	830	175	-3300	
PROPANE DEASPHALTING	9.0	15200	1000	40	2100	
HYDROTREATING NAPHTHA[2]	45.0	2750	150	50	700	900
GAS OIL	25.0	3500	250	60	700	
CAT REFORMING (90 RON)	45.0	16000	550	150	1800	
CAT CRACKING FCC (3&4)	20.0	800	800	275	650	
TCC	20.0	2000	800	225	-650	
HYDROCRACKING [5]	20.0	8000	750	200	600	2100
CAT POLYMERIZATION	110.0		350	160	8000	
SULFUR PLANT (10 TPD S)		1500		45	-2800	
MEA UNIT (10 TPD S)			220	12.5	4200	
H2 PLANT(10 MM SCFD)(6&7)		200	200	1400	1800	

(1) INCLUDES AIR BLOWER FOR AVERAGE 15% PRODUCTION COKE BURNING
(2) COMPRESSOR POWER COULD BE SUPPLIED FROM ASSOCIATED CAT REFORMER
(3) POWER INCLUDES REGENERATOR BLOWER BUT NO CREDIT FOR LETDOWN TUR
(4) NO CREDIT FOR CO BOILER WASTE HEAT RECOVERY
(5) POWER EXCLUSIVE OF H2 MAKE-UP COMPRESSOR
(6) FUEL INCLUDES FEED - STEAM METHANE REFORMING
(7) POWER INCLUDES BOOSTER COMPRESSOR TO 1750 PSIG
(8) REF: HYDROCARBON PROCESSING JULY, 1982, PG 109

TABLE 2[3]
USA
TYPICAL REFINERY UTILITY USAGE [1]
****
PER 1.0 BBL CAPACITY EXCEPT AS NOTED

	TYPICAL 'API	FUEL FIRED BTU	18 °F dT CW US GAL	POWER KWH	STEAM LB	EXCH SURFACE FT2
CRUDE DISTILLATION	25.0	60000	540	0.24	7.992	28.8
	40.0	79920	720	0.312	6	24.0
VAC DISTILLATION	16.0	50400	590.4	0.36	30	48.0
VISBREAKER	9.0	192000	345.6	0.36	30	
THERMAL CRACKER	9.0	480000	2880	0.744	45.6	
DELAYED COKER	9.0	218880	1195.2	1.2	34.8	
FLUID COKER [2]	9.0	-6000	1195.2	4.2	-79.2	
PROPANE DEASPHALTING	0.0	364800	1440	0.96	50.4	
HYDROTREATING NAPHTHA [3]	45.0	66000	216	1.2	16.8	21.6
GAS OIL	25.0	84000	360	1.44	16.8	
CAT REFORMING (90 RON)	45.0	384000	792	3.6	43.2	
CAT CRACKING FCC (4&5)	20.0	248846	1152	6.6	15.6	
TCC	20.0	277646	1152	5.4	-15.6	
HYDROCRACKING [6]	20.0	192000	1080	4.8	14.4	50.4
CAT POLYMERIZATION	110.0	0	504	3.8	192.0	
SULFUR PLANT (1.0 TONNE S)		3600000		108.0	-6720	
MEA UNIT (1.0 TONNE S)			31680	30.0	10080.0	
H2 PLANT (1000 SCF)(7&8)		480	28.8	3.4	4.3	

(1) REF: HYDROCARBON PROCESSING JULY, 1982, PG 109
(2) INCLUDES AIR BLOWER FOR AVERAGE 15% PRODUCTION COKE BURNING
(3) COMPRESSOR POWER COULD BE SUPPLIED FROM ASSOCIATED CAT REFORMER
(4) NOTE: POWER INCLUDES REGENERATOR BLOWER BUT NO CREDIT FOR LETDO
(5) NOTE: 5 W% COKE BURNING INCLUDED BUT NO CREDIT FOR CO BOILER WA
(6) POWER EXCLUSIVE OF H2 MAKE-UP COMPRESSOR
(7) FUEL INCLUDES FEED - STEAM METHANE REFORMING
(8) POWER INCLUDES BOOSTER COMPRESSOR TO 120 BARG

201

TABLE 3
USA
TYPICAL REFINERY UTILITY USAGE [1]
****
PER 1.0 TONNE CAPACITY EXCEPT AS NOTED

	TYPICAL SP GR	FUEL FIRED KCAL	10 °C dT CW M3	POWER KWH	EXCH STEAM KG	SURFACE m2
CRUDE DISTILLATION	0.9042	105264	14.2	1.67	25.3	18.6
	0.8251	153650	20.8	2.38	20.8	17.0
VAC DISTILLATION	0.9593	83337	14.6	2.36	89.4	29.3
VISBREAKER	1.0071	302407	8.2	2.25	85.1	
THERMAL CRACKER	1.0071	756017	27.2	33.77	-44.3	
DELAYED COKER	1.0071	344744	28.3	7.50	98.7	
FLUID COKER [2]	1.0071	-9450	28.3	26.26	-224.7	
PROPANE DEASPHALTING	1.0760	537768	31.9	5.62	133.8	
HYDROTREATING NAPHTHA [3]	0.8017	130588	6.4	9.43	59.9	15.8
GAS OIL	0.9042	147369	9.5	10.03	53.1	
CAT REFORMING (90 RON)	0.8017	759784	23.5	28.28	154.0	
CAT CRACKING FCC (4&5)	0.9340	422627	29.4	44.50	47.7	
TCC	0.9340	471539	29.4	36.41	-47.7	
HYDROCRACKING [6]	0.9340	326083	27.5	32.36	44.1	31.6
CAT POLYMERIZATION	0.5859		20.5	41.27	936.3	
SULFUR PLANT(1.0 TONNE S)		999295		119.02	-3360.0	
MEA UNIT (1.0 TONNE S)			132.0	33.06	5040.0	
H2 PLANT (1000 NM3)(7&8)		4038	3.6	112.22	65.5	

(1) REF: HYDROCARBON PROCESSING JULY, 1982, PG 109
(2) INCLUDES AIR BLOWER FOR AVERAGE 15% PRODUCTION COKE BURNING
(3) COMPRESSOR POWER COULD BE SUPPLIED FROM ASSOCIATED CAT REFORMER
(4) NOTE: POWER INCLUDES REGENERATOR BLOWER BUT NO CREDIT FOR LETDO
(5) NOTE: 5 W% COKE BURNING INCLUDED BUT NO CREDIT FOR CO BOILER WA
(6) POWER EXCLUSIVE OF H2 MAKE-UP COMPRESSOR
(7) FUEL INCLUDES FEED - STEAM METHANE REFORMING
(8) POWER INCLUDES BOOSTER COMPRESSOR TO 120 BARG

202

TABLE 4
USA
TYPICAL REFINERY TOTAL ENERGY USAGE [1]
****
PER 1.0 TONNE CAPACITY EXCEPT AS NOTED

	TYPICAL SP GR	FUEL FIRED KCAL	10 °C dT CW KCAL	POWER KCAL	STEAM KCAL	TOTAL ENERGY KCAL/M.T	SAY USE TOTAL ENERGY MKCAL/M.T	SAY USE TOTAL ENERGY MBTU/Bbl
CRUDE DISTILLATION	0.9042	105264	8532	4012	17697	135505	135	77.2
	0.8251	153650	12467	5715	14545	186377	185	96.9
VAC DISTILLATION	0.9593	83337	8786	5672	62547	160341	160	97.0
VISBREAKER	1.0071	302407	4908	5402	59578	372296	370	236.4
THERMAL CRACKER	1.0071	756017	16341	81037	-30981	822415	820	522.2
DELAYED COKER	1.0071	344744	16951	18008	69111	448814	450	285.0
FLUID COKER [2]	1.0071	-9450	16951	63029	-157287	-86757	-85	-55.1
PROPANE DEASPHALTING	1.0760	537768	19118	13484	93680	664050	665	450.5
H'TREAT NAPHTHA [3]	0.8017	130588	3849	22623	4191	198972	200	100.6
GAS OIL	0.9042	147369	5688	24071	37163	214292	215	122.1
CAT REFORM (90 RON)	0.8017	759784	14113	67868	107775	949540	950	479.9
CAT CRACKING								
FCC (4&5)	0.9340	422627	17621	106800	33406	580454	580	341.8
TCC	0.9340	471539	17621	87382	-33406	543136	545	319.8
HYDROCRACKING [6]	0.9340	326083	16520	77673	30837	451112	450	265.6
CAT POLYMERIZATION	0.5859	0	12289	99052	655404	766745	765	283.2
SULFUR PLANT(1.0 TONNE S)		999295	0	285638	-2352000	-1067067	-1070	-1070
MEA UNIT (1.0 TONNE S)		0	79200	79344	3528000	3686544	3700	3700
H2 PLANT (1000 NM3)(7&8)		4038	2182	269331	45825	321377	320	320

(1) REF: HYDROCARBON PROCESSING JULY, 1982, PG 109
(2) INCLUDES AIR BLOWER FOR AVERAGE 15% PRODUCTION COKE BURNING
(3) COMPRESSOR POWER COULD BE SUPPLIED FROM ASSOCIATED CAT REFORMER
(4) NOTE: POWER INCLUDES REGENERATOR BLOWER BUT NO CREDIT FOR LETDO
(5) NOTE: 5 W% COKE BURNING INCLUDED BUT NO CREDIT FOR CO BOILER WA
(6) POWER EXCLUSIVE OF H2 MAKE-UP COMPRESSOR
(7) FUEL INCLUDES FEED - STEAM METHANE REFORMING
(8) POWER INCLUDES BOOSTER COMPRESSOR TO 120 BARG

ENERGY CONVERSION FACTORS TO FUEL OIL EQUIVALENTS::
CW, M3/H: USE 4.41*75/2284*0.6 = 0.24 KWH/H * 2400 = 579 KCAL - SA
STEAM, KG/H: USE 540 KCAL/KG @ 80% EFF = 675 KCAL/KG - SA
POWER, KWH: USE 860.5 KCAL/KWH @ 35 % EFF = 2459 KCAL - SA

TABLE 5
TYPICAL REFINERY UTILITY USAGE
****
PER 1.0 BBL CAPACITY EXCEPT AS NOTED

UNIT	REF HDBK 1990*	TYPICAL 'API	FUEL FIRED BTU	18 °F dT CW US GAL	POWER KWH	STEAM LB
CRUDE DISTILLATION	TECHNIP LO 4TWR	34.0	40000	68	1.10	6.0
	* TECHNIP HI 4TWR	34.0	60000	90	1.50	12.0
	H PROC JULY '82 Hy	25.0	60000	540	0.24	8.0
	H PROC JULY '82 Lt	40.0	79920	720	0.31	6.0
	GDANSK	32.0	20	0.60	24.0	
CRUDE/VAC DISTILLATION	FW LO RANGE	8.7	80000	20	0.60	24.0
	* FW HI RANGE	8.7	120000			
	PLOCK LO RANGE 1&2	32.5				
	PLOCK HI RANGE 3&4	32.5				
VAC DISTILLATIN	* SHELL - LUBES	22.0	590	0.36	30.0	
	H PROC JULY '82	16.0	50400			
	GDANSK	20.0				
VAC FLASHER						
LT ENDS FRACT'N (USE)						
LPG		130.0	260	0.30	40.0	
NAPHTHA SPLITTING		50.0	450	0.30	70.0	
H'TREATING - NAPHTHAS	H PROC JULY '82	45.0	66000	216	1.20	16.8
	GDANSK	45.0				
- GAS OILS	H PROC JULY '82	25.0	84000	360	1.44	16.8
	PLOCK	26.0				
	GDANSK	26.0				
- RESID	* IFP - RESID	15.0	52500	285	8.50	74.0
	* CHEVRON					
REFORMING	* CHEVRON + HT	48.0	285000	160	0.70	-40.0
	* ENGELHARD-100 RON	48.0	250000	40	2.00	
	* IFP -102 RON	48.0	65000		1.00	-12.5
	H PROC JULY '82	45.0	384000	792	3.60	43.2
	PLOCK + HT (AVG)	48.0				
	GDANSK	45.0				

TABLE 6
TYPICAL REFINERY UTILITY USAGE
****
PER 1.0 BBL CAPACITY EXCEPT AS NOTED

UNIT	REF HDBK 1990	TYPICAL 'API	FUEL FIRED BTU	18 °F dT CW US GAL	POWER KWH	STEAM LB
FCCU	MW KELLOGG	20.0	229646	0	0.90	-100.0
	H PROC JULY '82	20.0	248846	1152	6.60	15.6
	PLOCK I	20.0				
	PLOCK II	20.0				
TCCU	H PROC JULY '82	20.0	277646	1152	5.40	-15.6
ALKYLATION - PRODUCT	STRATCO H2SO4	50.0		2050	13.50	180.0
	PLOCK	50.0				
OLIGOMERIZ'N - PRODUCT	MOBIL/BADGER	50.0		150	10.00	
	IFP	50.0		1315	1.90	54.0
CAT POLYMERIZATION	H PROC JULY '82	110.0		504	3.84	192.0
PROPANE DEASPHALTING	IFP	12.0	23750		1.40	7.0
	KERR-McGEE	12.0	95000	0	2.00	12.0
*	FW CRACKED	12.0	89000	0	2.00	60.0
	H PROC JULY '82	9.0	364800	1440	0.96	50.4
LUBES - PDA	FW LUBE	12.0	86000	415	2.10	115.0
	SHELL	12.0				
	GDANSK	15.0				
- FURFURAL/NMP	SHELL	25.0				
*	EXXON NMP - 103 VI	25.0	202000	200	1.40	54.3
	PLOCK	25.0				
	GDANSK	25.0				
- DEWAXING	SHELL MEK	27.0				
	PLOCK ACETONE/BENZ	27.0				
	GDANSK DI-ME	27.0				
- H'FINISHING	SHELL	27.0				
	PLOCK	27.0				
	GDANSK	27.0				
GREASE - PER TONNE	STRATCO					

TABLE 7
TYPICAL REFINERY UTILITY USAGE
****
PER 1.0 BBL CAPACITY EXCEPT AS NOTED

UNIT	REF HDBK 1990*	TYPICAL 'API		FUEL FIRED BTU	18 °F dT CW US GAL	POWER KWH	STEAM LB
H'CRACKING	* LUMMUS/OXY/AMOCO	12.4	783 SCFH2	56100	64	8.40	-35.5
		4.7	1720SCFH2	69800	164	16.50	-97.0
	* CHEVRON	23.0		143000	330	7.00	-50.0
	* IFP	21.5		40000		2.80	12.5
	* LINDE	21.5		50000	190	1.50	
	* UNOCAL/UOP	8.4		135000		10.00	
	H PROC JULY '82	20.0		192000	1080	4.80	14.4
THERMAL CRACKER	H PROC JULY '82	20.0		48000	1152	5.40	-15.6
VISBREAKING	* LUMMUS - 356'FFEED	8.2		75000	270	0.50	45.0
	* IFP	15.0		22800	0	1.90	10.6
	H PROC JULY '82	9.0		192000	346	0.36	30.0
COKING	* LUMMUS - DELAYED	7.4		145000	180	3.90	20.0
	* EXXON - FLEXI	3.1			400	13.00	-100.0
	* FW	2.6		120000	36	3.60	-40.0
	H PROC JULY '82 DE	9.0		218880	1195	1.20	34.8
	H PROC JULY '82 FL	9.0		-6000	1195	4.20	-79.2
COKE CALCINING-PER TONNE	* GKT - W GERMANY						
ASPHALT BLOWING	* SNAM - 80/100 PEN	5.9		89335		0.81	6.57
	- 40/50 PEN	5.1		57659		2.73	30.75
	PLOCK	8.0					
	GDANSK	8.0					
MTBE - PRODUCT	* CD TECH	45.4			1860	1.00	296.0
	* PHILLIPS	45.4			1870	1.10	224.0
MEA UNIT (1.0 TONNE S)	* H PROC JULY '82				31680	30.00	10080.0
	GDANSK						
SULFUR PLANT (1.0 TONNE S)	* H PROC JULY '82			3600000		108.00	-6720.0
	PLOCK						
	GDANSK						
H2 PLANT (1000 SCF) (6&7)				480	29	3.36	4.3

TABLE 8
TYPICAL REFINERY UTILITY USAGE
****
PER 1.0 TONNE CAPACITY EXCEPT AS NOTED

UNIT	REF HDBK 1990	TYPICAL SP GR	FUEL FIRED KCAL	10 °C dT CW M3	POWER KWH	STEAM KG
CRUDE DISTILLATION	TECHNIP LO 4TWR	0.8550	74212	1.9	8.10	20.1
	* TECHNIP HI 4TWR	0.8550	111317	2.5	11.05	40.1
	H PROC JULY '82 Hy	0.9042	105264	14.2	1.67	25.3
	H PROC JULY '82 Lt	0.8251	153650	20.8	2.38	20.8
	GDANSK	0.8654	153000	0.4	5.00	40.2
CRUDE/VAC DISTILLATION	FW LO RANGE	1.0093	125734	0.5	3.74	67.9
	* FW HI RANGE	1.0093	188601	0.5	3.74	67.9
	PLOCK LO RANGE 1&2	0.8628	180380	8	4.80	56.0
	PLOCK HI RANGE 3&4	0.8628	205580	8	8.20	139.0
VAC DISTILLATION	* SHELL - LUBES	0.9210	174000	14.2	3.40	131.0
	H PROC JULY '82	0.9593	83337	14.6	2.36	89.4
	GDANSK	0.9340	122000	9.7	6.90	138.0
VAC FLASHER		0.0000	0			
LT ENDS FRACT'N (USE)						
LPG		0.5411	0	11.4	3.49	211.2
NAPHTHA SPLITTING		0.7796	0	13.7	2.42	256.5
HYDROTREATING - NAPHTHAS	H PROC JULY '82	0.8017	130588	6.4	9.43	59.9
	GDANSK	0.8017	178000	1.3	12.60	4.8
- GAS OILS	H PROC JULY '82	0.9042	147369	9.5	10.03	53.1
	PLOCK	0.8984	61000	14.0	14.00	55.6
	GDANSK	0.8984	131000	1.4	2.40	3.1
- RESID	* IFP - RESID	0.9659	86221	7.0	55.42	218.9
	* CHEVRON	0.0000	0	0.0	0.00	0.0
REFORMING	* CHEVRON + HT	0.7883	573487	4.8	5.59	-145.0
	* ENGELHARD-100 RON	0.7883	503058	1.2	15.98	0.0
	* IFP -102 RON	0.7883	130795	0.0	7.99	-45.3
	H PROC JULY '82	0.8017	759784	23.5	28.28	154.0
	PLOSK + HT (AVG)	0.7883	760000	15.0	42.00	138.8
	GDANSK	0.8017	657000	5.7	7.80	521.2

TABLE 9
TYPICAL REFINERY UTILITY USAGE
****
PER 1.0 TONNE CAPACITY EXCEPT AS NOTED

UNIT	REF HDBK 1990*	TYPICAL SP GR	FUEL FIRED KCAL	10 °C dT CW M3	POWER KWH	STEAM KG
FCCU	MW KELLOGG	0.9340	390019	0.0	6.07	-305.9
	H PROC JULY '82	0.9340	422627	29.4	44.50	47.7
	PLOCK I	0.9340	601930	32.0	62.00	55.6
	PLOCK II	0.9340	808770	17.0	28.00	74.1
TCCU	H PROC JULY '82	0.9340	471539	29.4	36.41	-47.7
ALKYLATION - PRODUCT	STRATCO H2SO4	0.7796	0	62.6	109.05	659.7
	PLOCK	0.7796	385680	116.0	41.00	130.0
OLIGOMERIZ'N - PRODUCT	MOBIL/BADGER	0.7796	0	4.6	80.78	0.0
	IFP	0.7796	0	40.2	15.35	197.9
CAT POLYMERIZATION	H PROC JULY '82	0.5859	0	20.5	41.27	936.3
PROPANE DEASPHALTING	IFP	0.9861	38206	0.0	8.94	20.3
	KERR-McGEE	0.9861	152823	0.0	12.77	34.8
	* FW CRACKED	0.9861	143173	0.0	12.77	173.9
	H PROC JULY '82	1.0071	574573	14.0	6.00	143.0
LUBES - PDA	FW LUBE	0.9861	138345	10.0	13.41	333.2
	SHELL	0.9861	550000	26.3	10.90	268.0
	GDANSK	0.9659	298600	9.5	31.60	147.0
- FURFURAL/NMP	SHELL	0.9042	414000	27.9	9.90	137.0
	* EXXON NMP - 103 VI	0.9042	354389	5.3	9.75	171.6
	PLOCK	0.9042	453860	30.0	20.00	333.3
	GDANSK	0.9042	281500	8.0	3.13	134.8
- DEWAXING	SHELL MEK	0.8927	440	36.1	27.40	1233.0
	PLOCK ACETONE/BENZ	0.8927	0	49.0	110.00	1463.0
	GDANSK DI-ME	0.8927	0	19.4	35.13	1593.7
- HYDROFINISHING	SHELL	0.8927	150000	4.1	9.20	106.0
	PLOCK	0.8927	152400	25.0	8.50	148.1
	GDANSK	0.8927	150000	11.1	3.95	141.0
GREASE - PER TONNE	STRATCO	0.0000	545000	660.0	81.50	0.0

TABLE 10
TYPICAL REFINERY UTILITY USAGE
****
PER 1.0 TONNE CAPACITY EXCEPT AS NOTED

UNIT	REF HDBK 1990	TYPICAL SP GR	FUEL FIRED KCAL	10 °C dT CW M3	POWER KWH	STEAM KG
H'CRACKING	* LUMMUS/OXY/AMOCO	0.9833	90498	1.6	53.80	-103.2
		1.0389	106573	3.8	100.02	-266.8
	* CHEVRON	0.9159	247673	8.6	48.13	-156.0
	* IFP	0.9248	68607	0.0	19.07	38.6
	* LINDE	0.9248	85758	4.9	10.21	0.0
	* UNOCAL/UOP	1.0114	211722	0.0	62.26	0.0
	H PROC JULY '82	0.9340	326083	27.5	32.36	44.1
THERMAL CRACKER	H PROC JULY '82	0.9340	81521	29.4	36.41	-47.7
VISBREAKING	* LUMMUS - 356'FFEED	1.0129	117455	6.3	3.11	126.9
	* IFP	0.9659	37444	0.0	12.39	31.4
	H PROC JULY '82	1.0071	302407	8.2	2.25	85.1
COKING	* LUMMUS - DELAYED	1.0187	225779	4.2	24.11	56.1
	* EXXON - FLEXI	1.0513	0	9.1	77.87	-271.8
	* FW	1.0552	180395	0.8	21.49	-108.3
	H PROC JULY '82 DE	1.0071	344744	28.3	7.50	98.7
	H PROC JULY '82 FL	1.0071	-9450	28.3	26.26	-224.7
COKE CALCINING-PER TONNE	* GKT - W GERMANY	0.0000	270000		54.00	1950.0
ASPHALT BLOWING	* SNAM - 80/100 PEN	1.0300	55000	0.0	4.00	20.0
	- 40/50 PEN	1.0360	65000	0.0	10.00	20.0
	PLOCK	1.0143	139700	0.0	5.00	18.5
	GDANSK	1.0143	90165	0.0	16.95	86.6
MTBE - PRODUCT	* CD TECH	0.7999	0	55.4	7.87	1057.3
	* PHILLIPS	0.7999	0	55.7	8.66	800.1
MEA UNIT (1.0 TONNE S)	* H PROC JULY '82	0.0000	0	132.0	33.06	5040.0
	GDANSK	0.0000	0	0.0	0.00	6292.0
SULFUR PLANT (1.0 TONNE S)	* H PROC JULY '82	0.0000	999295	0.0	119.02	-3360.0
	PLOCK	0.0000	1397000	0.0	68.00	-5181.0
	GDANSK	0.0000	33	35.0	11.90	-1075.0
H2 PLANT (1000 NM3)(6&7)		0.0000	4038	4.1	112.22	65.5

TABLE 11
TYPICAL REFINERY TOTAL ENERGY USAGE
****
PER 1.0 TONNE CAPACITY EXCEPT AS NOTED

UNIT	REF HDBK 1990	TYPICAL SP GR	FUEL FIRED KCAL	10 °C dT CW KCAL	POWER KCAL	STEAM KCAL	TOTAL ENERGY KCAL/T	SAY USE TOTAL ENERGY M KCAL/T	SAY USE TOTAL ENERGY MBTU/Bbl
CRUDE DISTILLATION	TECHNIP LO 4TWR	0.8550	74212	1136	19445	14036	108829	110	58.7
	* TECHNIP HI 4TWR	0.8550	111317	1504	26516	28072	167409	170	90.2
	H PROC JULY '82 Hy	0.9042	105264	8532	4012	17697	135505	135	77.2
	H PROC JULY '82 Lt	0.8251	153650	12467	5715	14545	186377	185	96.9
	GDANSK	0.8654	153000	240	12000	28140	193380	195	105.5
CRUDE/VAC DISTILLATION	FW LO RANGE	1.0093	125734	283	8985	47561	182563	185	116.2
	* FW HI RANGE	1.0093	188601	283	8985	47561	245430	245	156.2
	PLOCK LO RANGE 1&2	0.8628	180380	4800	11520	39200	235900	235	128.3
	PLOCK HI RANGE 3&4	0.8628	205580	4500	19680	97300	327060	325	177.9
VAC DISTILLATION	* SHELL - LUBES	0.9218	174000	8520	8160	91700	282380	280	164.1
	H PROC JULY '82	0.9593	83337	8786	5672	62547	160341	160	97.0
	GDANSK	0.9340	122000	5820	16560	96600	240980	240	141.9
VAC FLASHER		0.0000	0	0	0	0	0		
LT ENDS FRACT'N (USE)		0.0000	0	0	0	0	0		
LPG		0.5411	0	6864	8379	147850	163094	165	55.6
NAPHTHA SPLITTING		0.7796	0	8246	5816	179583	193645	195	95.2
H'TREATING - NAPHTHAS	H PROC JULY '82	0.8017	130588	3849	22623	41913	198972	200	100.6
	GDANSK	0.8017	178000	780	30240	3360	212380	210	107.3
- GAS OILS	H PROC JULY '82	0.9042	147369	5688	24071	37163	214292	215	122.1
	PLOCK	0.8984	61000	8400	33600	38920	141920	140	80.4
	GDANSK	0.8984	131000	840	5760	2170	139770	140	79.2
- RESID	* IFP - RESID	0.9659	86221	4215	133006	153236	376678	375	229.4
	* CHEVRON	0.0000	0	0	0	0	0		
REFORMING	* CHEVRON + HT	0.7883	573487	2900	13421	-101488	488319	490	242.7
	* ENGELHARD-100 RON	0.7883	503058	725	38345	0	542128	540	269.4
	* IFP -102 RON	0.7883	130795	0	19173	-31715	118253	120	58.8
	H PROC JULY '82	0.8017	759784	14113	67868	107775	949540	950	479.9
	PLOSK + HT (AVG)	0.7883	760000	9000	100800	97160	966960	965	480.6
	GDANSK	0.8017	657000	3420	18720	364840	1043980	1045	527.7

TABLE 12

TYPICAL REFINERY TOTAL ENERGY USAGE

****

PER 1.0 TONNE CAPACITY EXCEPT AS NOTED

UNIT	REF HDBK 1990	TYPICAL SP GR	FUEL FIRED KCAL	10 °C dT CW KCAL	POWER KCAL	STEAM KCAL	TOTAL ENERGY KCAL/T	SAY USE TOTAL ENERGY M KCAL/T	SAY USE TOTAL ENERGY MBTU/Bbl
FCCU	MW KELLOGG	0.9340	390019	0	14564	-214143	190440	190	112.1
	H PROC JULY '82	0.9340	422627	17621	106800	33406	580454	580	341.8
	PLOCK I	0.9340	601930	19200	148800	38920	808850	810	476.3
	PLOCK II	0.9340	808770	10200	67200	51870	938040	940	552.3
TCCU	H PROC JULY '82	0.9340	471539	17621	87382	-33406	543136	545	319.8
ALKYLATION - PRODUCT	STRATCO H2SO4	0.7796	0	37566	261713	461785	761064	760	374.1
	PLOCK	0.7796	385680	69600	98400	91000	644680	645	316.9
OLIGOMERIZ'N - PRODUCT	MOBIL/BADGER	0.7796	0	2749	193862	0	196611	195	96.6
	IFP	0.7796	0	24097	36834	138536	199466	200	98.0
CAT POLYMERIZATION	H PROC JULY '82	0.5859	0	12289	99052	655404	766745	765	283.2
PROPANE DEASPHALTING	IFP	0.9861	38206	0	21458	14198	73863	75	45.9
	KERR-McGEE	0.9861	152823	0	30655	24340	207818	210	129.2
	* FW CRACKED	0.9861	143171	0	30655	121701	295527	295	183.7
	H PROC JULY '82	1.0071	574573	20427	14407	100092	709498	710	450.5
LUBES - PDA	FW LUBE	0.9861	138345	6013	32187	233260	409806	410	254.8
	SHELL	0.9861	550000	15780	26160	187600	779540	780	484.6
	GDANSK	0.9659	298600	5700	75840	102900	483040	485	294.1
- FURFURAL/NMP	SHELL	0.9042	414000	16740	23760	95900	550400	550	313.7
	* EXXON NMP - 103 VI	0.9042	354389	3160	23402	120117	501068	500	285.6
	PLOCK	0.9042	453860	18000	48000	233310	753170	755	429.3
	GDANSK	0.9042	281500	4782	7512	94360	388154	390	221.3
- DEWAXING	SHELL MEK	0.8927	440	21660	65760	863100	950960	950	535.2
	PLOCK ACETONE/BENZ	0.8927	0	29400	264000	1024100	1317500	1320	741.5
	GDANSK DI-ME	0.8927	0	11622	84312	1115590	1211524	1210	681.9
- H'FINISHING	SHELL	0.8927	150000	2460	22080	74200	248740	250	140.0
	PLOCK	0.8927	152400	15000	20400	103670	291470	290	164.0
	GDANSK	0.8927	150000	6654	9480	98700	264834	265	149.1
GREASE - PER TONNE	STRATCO	0.0000	545000	396000	195600	0	1136600	1135	

TABLE 13
TYPICAL REFINERY TOTAL ENERGY USAGE
****
PER 1.0 TONNE CAPACITY EXCEPT AS NOTED

UNIT	REF HDBK 1990	TYPICAL SP GR	FUEL FIRED KCAL	10 °C dT CW KCAL	POWER KCAL	STEAM KCAL	TOTAL ENERGY KCAL/T	SAY USE TOTAL ENERGY M KCAL/T	SAY USE TOTAL ENERGY MBTU/Bbl
H'CRACKING	* LUMMUS/OXY/AMOCO	0.9833	90498	933	129109	-72207	148332	150	92.0
		1.0389	106573	2255	240036	-186741	162123	[illegible]	106.2
	* CHEVRON	0.9159	247673	5148	115516	-109192	259145	260	[illegible].6
	* IFP	0.9248	68607	0	45758	27033	141397	140	[illegible].4
	* LINDE	0.9248	85758	2935	24513	0	113206	115	[illegible].0
	* UNOCAL/UOP	1.0114	211722	0	149428	0	361150	360	230.3
	H PROC JULY '82	0.9340	326083	16520	77673	30837	451112	450	265.6
THERMAL CRACKER	H PROC JULY '82	0.9340	81521	17621	87382	-33406	153117	155	90.2
VISBREAKING	* LUMMUS - 356'FFEED	1.0129	117455	3808	7461	88859	217583	220	138.9
	* IFP	0.9659	37444	0	29731	21950	89125	90	54.3
	H PROC JULY '82	1.0071	302407	4908	5402	59578	372296	370	236.4
COKING	* LUMMUS - DELAYED	1.0187	225779	2524	57861	39267	325431	325	209.0
	* EXXON - FLEXI	1.0513	0	5436	186898	-190255	2079	2	1.4
	* FW	1.0552	180395	487	51564	-75819	156627	155	104.2
	H PROC JULY '82 DE	1.0071	344744	16951	18008	69111	448814	450	285.0
	H PROC JULY '82 FL	1.0071	-9450	16951	63029	-157287	-86757	-85	-55.1
COKE CALCINING-PER TONNE	* GKT - W GERMANY	0.0000	270000	0	129600	1365000	1764600	1765	-
ASPHALT BLOWING	* SNAM - 80/100 PEN	1.0300	55000	0	9600	14000	78600	80	51.0
	- 40/50 PEN	1.0360	65000	0	24000	14000	103000	105	67.3
	PLOCK	1.0143	139700	0	12000	12950	164650	165	105.3
	GDANSK	1.0143	90165	0	40682	60634	191481	190	122.4
MTBE - PRODUCT	CD TECH	0.7999	0	33220	18895	740134	792249	790	399.5
	* PHILLIPS	0.7999	0	33399	20784	560102	614285	615	309.8
MEA UNIT (1.0 TONNE S)	H PROC JULY '82	0.0000	0	79200	79344	3528000	3686544	3685	-
	GDANSK	0.0000	0	0	0	4404400	4404400	4405	-
SULFUR PLANT (1.0 TONNE S)	H PROC JULY '82	0.0000	999295	0	285638	-2352000	-1067067	-1070	-
	PLOCK	0.0000	1397000	0	163200	-3626700	-2066500	-2065	-
	GDANSK	0.0000	33	21000	28560	-752500	-702907	-705	-
H2 PLANT (1000 NM3)(6&7)		0.0000	4038	2438	269331	45825	321633	320	-

TABLE 14
USA
TYPICAL REFINERY TOTAL ENERGY USAGE
****

COMPARISON OF TYPICAL REFINERY UNIT TOTAL ENERGY REQUIREMENTS
AGAINST A REASONABLY EFFICIENT 80 000 BPSD USA FUELS REFINERY
(ENERGY REQUIREMENT = 380 000 BTU/BBL CRUDE FEED)

REF: PELHAM & MORIARTY, PROFIMATICS INC, HYDROCARBON PROCESSING, JULY 1985 Pg 51 - TABLE 1

UNIT		CAPACITY BPSD	TOTAL ENERGY DEMAND Btu/BbL	CALC'D TOTAL ENERGY DEMAND M Btu/D	REPORTED TOTAL ENERGY DEMAND M Btu/D	TOTAL ENERGY DEMAND %
CRUDE/VAC UNIT		80000	133700	10696.0		247592.6
LT ENDS FRACTINATION	SAY	1000	56300	56.3		1303.2
NAPHTHA HDS		16000	101100	1617.6		37444.4
CATALYTIC REFORMER		16000	480200	7683.2		177851.9
ALKYLATION UNIT		5500	368600	2027.3		46928.2
FCC UNIT		24000	341500	8196.0		189722.2
TOTAL PROCESS UNITS			378455	30276.4		700842.6
TOTAL REFINERY PREDICTED			378455	30276.4		
TOTAL REFINERY REPORTED		80000	380000		30400.0	
TOTAL CRUDE FEED @ 6.0 MM BTU/BbL				480000.0	480000.0	
ENERGY EFFICIENCY - % ON CRUDE				6.31	6.33	

NOTE: THE CLOSE CORRESPONDENCE OF THESE RESULTS APPEARS TO JUSTIFY THE GENERAL VALIDITY OF THE "TOTAL ENERGY DEMAND" FACTORS IN REPRESENTING REASONABLE ENERGY EFFICIENCIES IN A MODERN REFINERY CONTEXT.

HOWEVER, IT SHOULD NOT BE OVERLOOKED THAT THE CONCLUSIONS OF THIS PAPER WITH THERMODYNAMIC AND PRACTICAL CONSIDERATIONS OF REFINERY ENERGY LOSSES WAS TO SUGGEST THAT GIVEN THE CURRENT REFINERY CONFIGURATIONS AND TECHNOLOGIES, CONCEIVABLE FURTHER IMPROVEMENTS COULD APPROXIMATE 23 PERCENT.

TABLE 15
USA
TYPICAL REFINERY UNIT ENERGY USAGE
****
SELECTED SPECIFIC ENERGY DEMANDS

UNIT	BASIS FEED/ PRODUCT	FEEDSTOCK 'API	FEEDSTOCK Sp Gr	SPECIFIC ENERGY DEMAND KCAL/T x 1 000	SPECIFIC ENERGY DEMAND BTU/BBL x 1 000
DISTILLATION					
ATMOSPHERIC	FEED	25.0	0.9042	135	77.0
ATMOSPHERIC	FEED	40.0	0.8251	185	96.2
ATMOSPHERIC/VACUUM LUBES	FEED	32.0	0.8654	305	166.4
ATMOSPHERIC/VACUUM FLASH	FEED	32.0	0.8654	245	133.7
VACUUM - FUELS	FEED	16.0	0.9593	160	96.8
LPG	FEED	130.0	0.5411	165	56.3
NAPHTHA SPLITTING	FEED	50.0	0.7796	195	95.8
FCC GAS PLANT	FEED		0.0000		
CRACKING					
FCC	FEED	20.0	0.9340	580	341.5
TCC	FEED	20.0	0.9340	545	320.9
VISBREAKING	FEED	9.0	1.0071	350	222.2
DELAYED COKING	FEED	9.0	1.0071	450	285.7
FLUID COKING	FEED	9.0	1.0071	-85	-54.0
FLEXI COKING	FEED		0.0000		
HYDROTREATING					
NAPHTHA	FEED	45.0	0.8017	200	101.1
GAS OIL	FEED	25.0	0.9042	215	122.6
RESID	FEED		0.0000		
HYROCRACKING					
GAS OILS	FEED	20.0	0.9340	400	235.5
RESID	FEED		0.0000		
LUBES					
VACUUM - LUBES	FEED	22.0	0.9218	750	466.2
PDA - LUBES	FEED	12.0	0.9861	250	145.3
FURFURAL/NMP	FEED	25.0	0.9042	525	299.3
DEWAXING - MEK/DI-ME	FEED	27.0	0.8927	950	534.7
H'FINISHING	FEED	27.0	0.8927	200	112.6
BLENDING	PRODUCT	27.0	0.8927	30	16.9
REFORMING	FEED	45.0	0.8017	950	480.2
TREATING					
MEROX	FEED	35.0	0.8498	20	10.7
PDA - FUELS	FEED	9.0	1.0071	250	158.7
AMINE	PRODUCT		PER TONNE	3650	3650.0
SULFUR PLANT	PRODUCT		PER TONNE	-1000	-1000.0
HYDROGEN PLANT	PRODUCT		1000 NM3	320	320.0
GENERAL					
ALKYLATION	PRODUCT	50.0	0.7796	750	368.6
POLYMERIZATION	FEED	110.0	0.5859	750	277.0
OLIGOMERIZATION	PRODUCT	50.0	0.7796	200	98.3
MTBE	PRODUCT	45.0	0.8017	700	353.8
GREASE	PRODUCT		PER TONNE	1150	1150.0
COKE CALCINING	PRODUCT		PER TONNE	1750	1750.0
ASPHALT BLOWING	FEED		PER TONNE	100	100.0
BLENDING - FUELS	FEED	35.0	0.8498	20	10.7

214

Potential Value of Improvements in Crude Heat Exchanger Train

Data =

- Design crude rate of 12.6 million tonnes per year
- Enthalpy change of 1°C approximately 0.625 kcal/kg
- Value of fuel oil $74/tonne as of May, 1991
- Assume fired heater efficiency of 80%
- Heating value of fuel oil at 9600 kcal/kg

Calculation of potential savings in reduced fuel oil consumption due to improved heat exchanger efficiency or heat recovery.

$(12.6 \times 10^6$ tonnes/year) x (1000 kg/tonnes) x (0.625 kcal/kg°C) x (kg/9600 kcal) x

($74/1000 kg) x (1/0.80) = $75 900 per degree centigrade per year

F. CRUDE TOWER SIMULATION

INTRODUCTION

The simulations of the Mazovian refinery crude tower were performed using PRO/II® from Simulation Sciences Inc. The simulations are based on one of three different approaches, that is:

1) fixed products rates at constant pumparound duties based either on the mass flow rate of the products or on ASTM D86 cut points for the products.

2) control the temperature profile of the crude distillation tower and the side stream strippers by specifying product temperatures and letting other parameters vary.

3) control the ASTM D86 distillations of the products and let the other parameters vary.

No approach was able to completely simulate the crude tower, but the approach that best fit the data was either 2) the temperature profile or 3) the ASTM distillation approach.

DESIGN BASIS

The simulations are based on data received from DMC process engineer, W. Holve, dated May 22, 1991 for a test run performed in 1988 by the Mazovian staff. This report includes a true boiling point curve (TBP) (as tabular data), light ends analysis and gravity for the whole crude. Figures 5 through 12 show the following information from the test run:

- Flow rates
  - Crude feed
  - Products
  - Pumparounds
  - Stripping steams
- Tower pressures

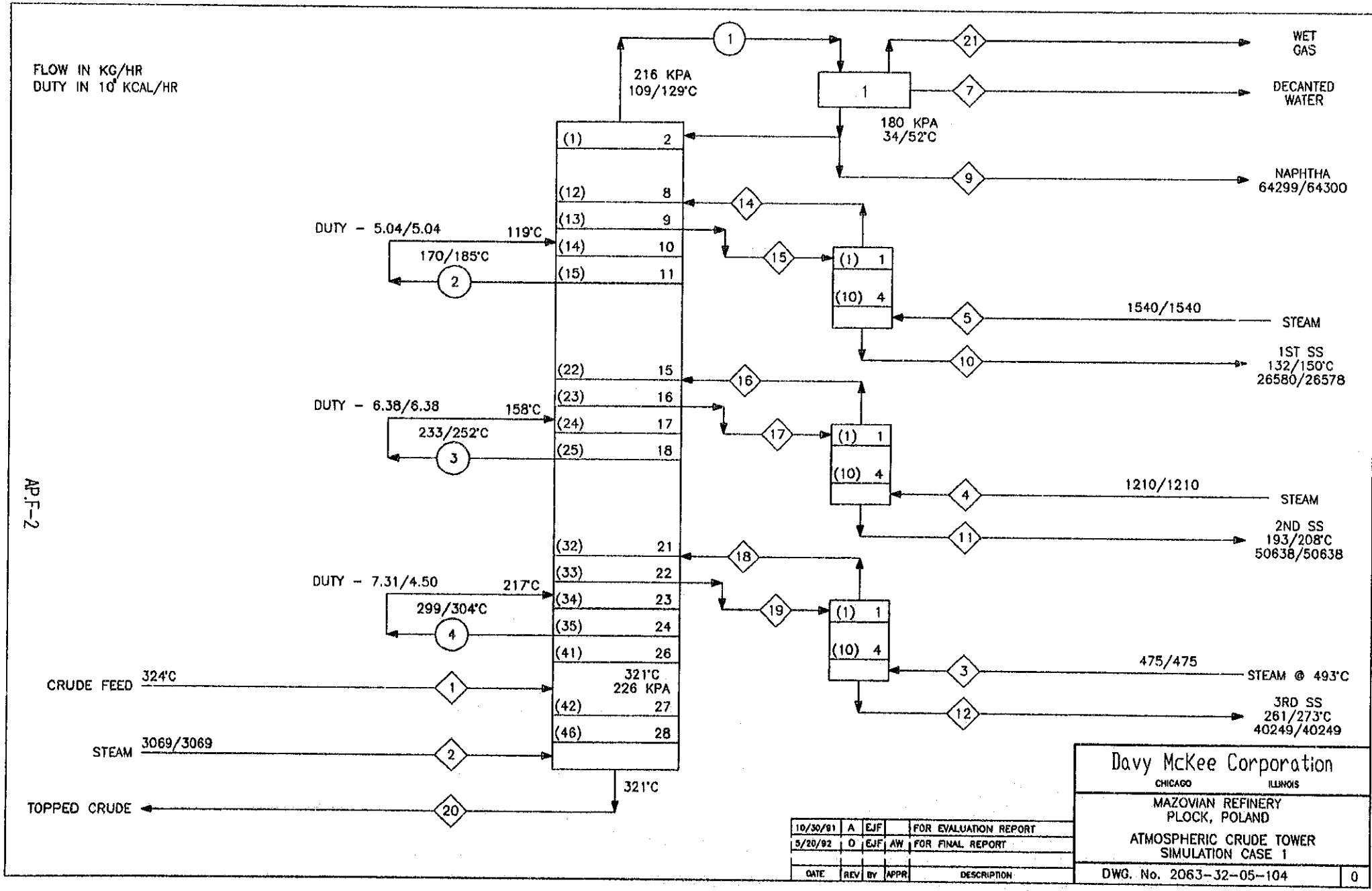
FLOW IN KG/HR
DUTY IN 10⁶ KCAL/HR
216 KPA
109/129°C
180 KPA
34/52°C
WET GAS
DECANTED WATER
NAPHTHA
64299/64300
DUTY - 5.04/5.04
119°C
170/185°C
1540/1540
STEAM
1ST SS
132/150°C
26580/26578
DUTY - 6.38/6.38
158°C
233/252°C
1210/1210
STEAM
2ND SS
193/208°C
50638/50638
DUTY - 7.31/4.50
217°C
299/304°C
475/475
STEAM @ 493°C
3RD SS
261/273°C
40249/40249
CRUDE FEED
324°C
STEAM
3069/3069
321°C
226 KPA
321°C
TOPPED CRUDE
Davy McKee Corporation
CHICAGO ILLINOIS
MAZOVIAN REFINERY
PLOCK, POLAND
ATMOSPHERIC CRUDE TOWER
SIMULATION CASE 1
DWG. No. 2063-32-05-104
0
10/30/91 A EJF FOR EVALUATION REPORT
5/20/92 0 EJF AW FOR FINAL REPORT
DATE REV BY APPR DESCRIPTION

FIGURE 5

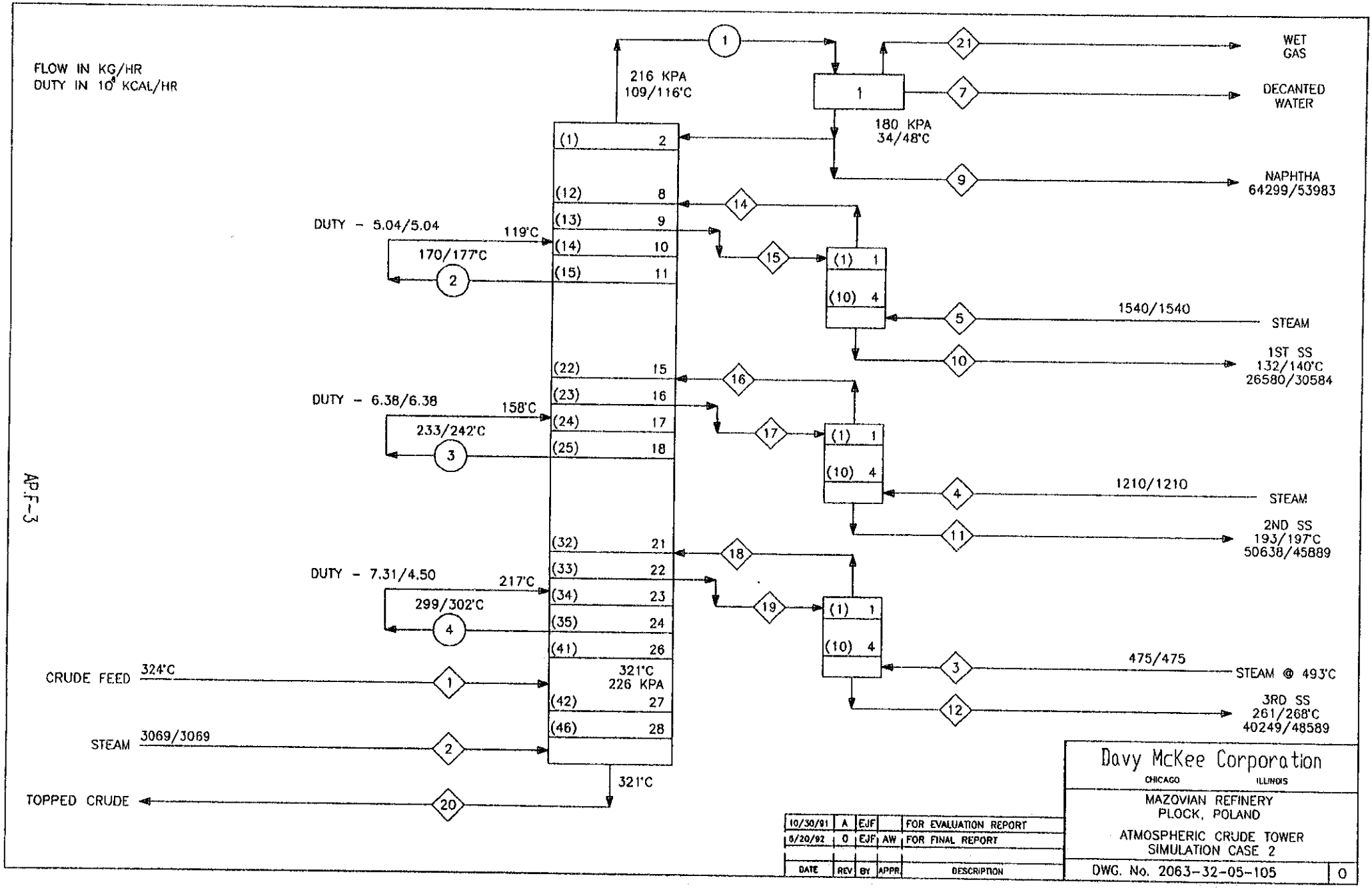
FLOW IN KG/HR
DUTY IN 10⁶ KCAL/HR
216 KPA
109/116°C
180 KPA
34/48°C
WET GAS
DECANTED WATER
NAPHTHA
64299/53983
DUTY - 5.04/5.04
119°C
170/177°C
1540/1540
STEAM
1ST SS
132/140°C
26580/30584
DUTY - 6.38/6.38
158°C
233/242°C
1210/1210
STEAM
2ND SS
193/197°C
50638/45889
DUTY - 7.31/4.50
217°C
299/302°C
CRUDE FEED
324°C
475/475
STEAM @ 493°C
3RD SS
261/268°C
40249/48589
STEAM
3069/3069
321°C
226 KPA
321°C
TOPPED CRUDE
Davy McKee Corporation
CHICAGO ILLINOIS
MAZOVIAN REFINERY
PLOCK, POLAND
ATMOSPHERIC CRUDE TOWER
SIMULATION CASE 2
DWG. No. 2063-32-05-105
0
10/30/91 A EJF FOR EVALUATION REPORT
5/20/92 0 EJF AW FOR FINAL REPORT
DATE REV BY APPR DESCRIPTION

FIGURE 6

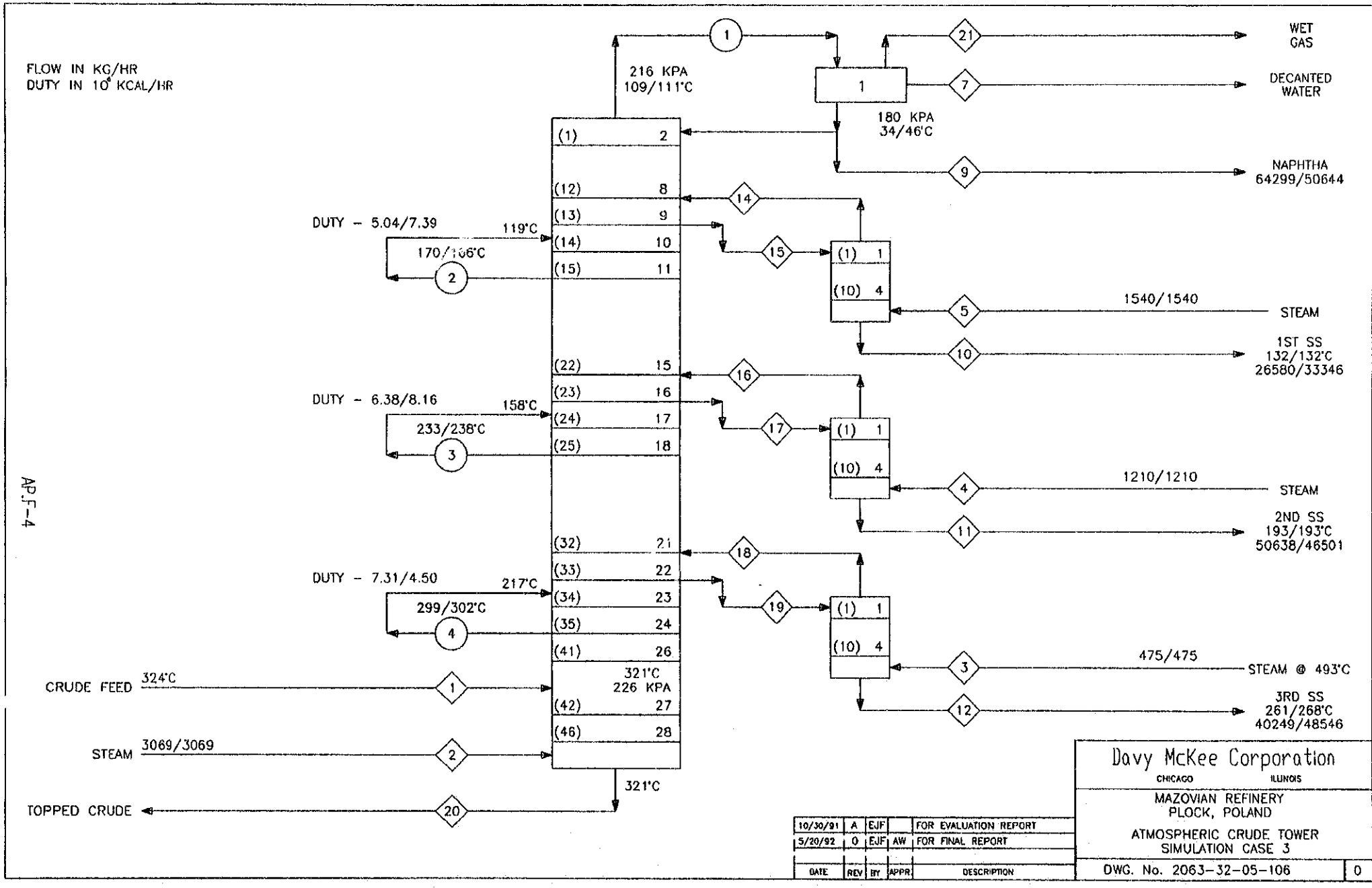
FLOW IN KG/HR
DUTY IN 10⁶ KCAL/HR
216 KPA
109/111°C
180 KPA
34/46°C
WET GAS
DECANTED WATER
NAPHTHA
64299/50644
DUTY - 5.04/7.39
119°C
170/186°C
1540/1540
STEAM
1ST SS
132/132°C
26580/33346
DUTY - 6.38/8.16
158°C
233/238°C
1210/1210
STEAM
2ND SS
193/193°C
50638/46501
DUTY - 7.31/4.50
217°C
299/302°C
475/475
STEAM @ 493°C
3RD SS
261/268°C
40249/48546
CRUDE FEED
324°C
STEAM
3069/3069
TOPPED CRUDE
321°C
226 KPA
321°C
Davy McKee Corporation
CHICAGO ILLINOIS
MAZOVIAN REFINERY
PLOCK, POLAND
ATMOSPHERIC CRUDE TOWER
SIMULATION CASE 3
DWG. No. 2063-32-05-106
0
10/30/91 A EJF FOR EVALUATION REPORT
5/20/92 0 EJF AW FOR FINAL REPORT
DATE REV BY APPR DESCRIPTION

FIGURE 7

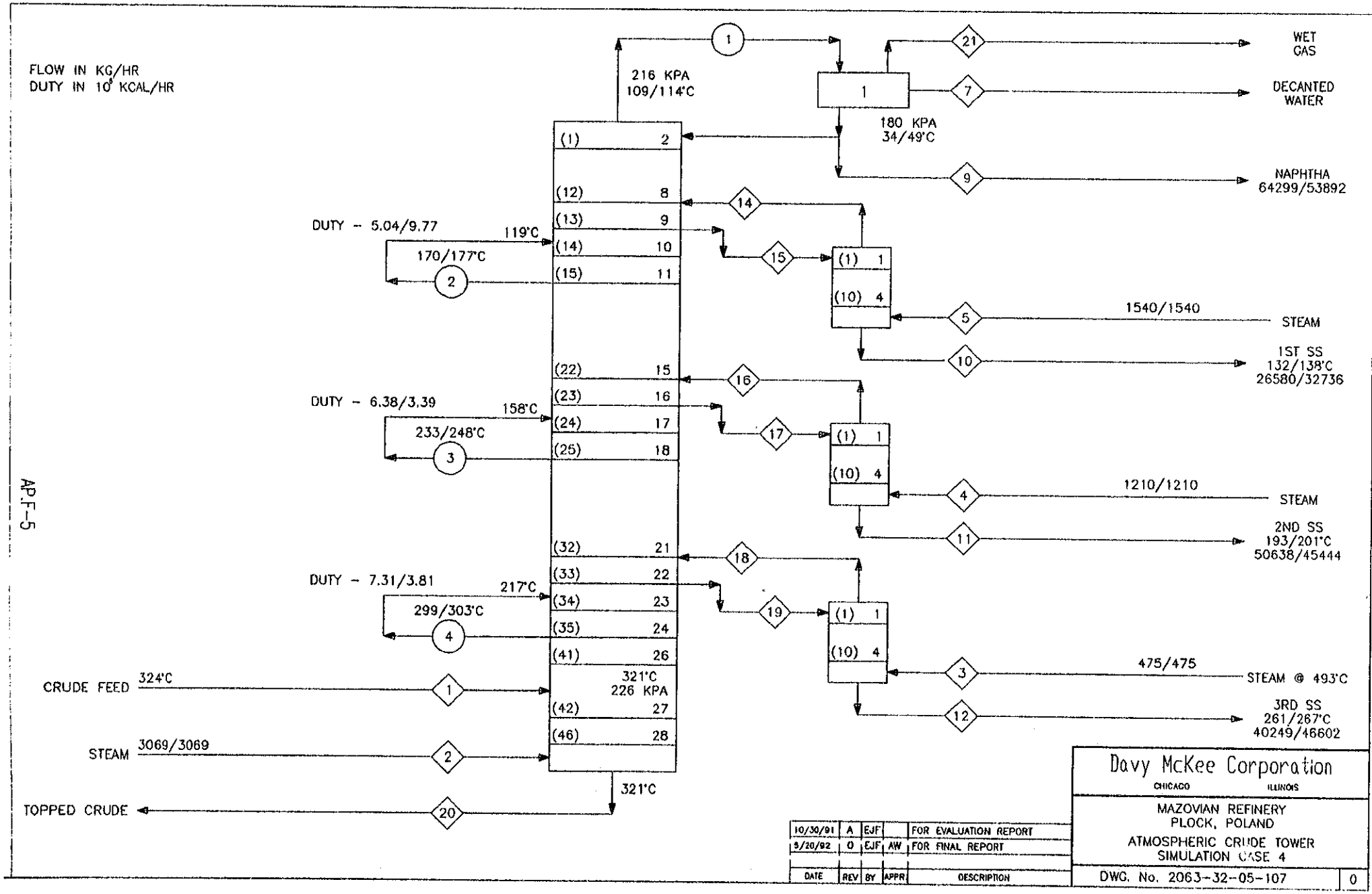
FLOW IN KG/HR
DUTY IN 10⁶ KCAL/HR
216 KPA
109/114°C
180 KPA
34/49°C
WET GAS
DECANTED WATER
NAPHTHA
64299/53892
DUTY - 5.04/9.77
119°C
170/177°C
1540/1540
STEAM
1ST SS
132/138°C
26580/32736
DUTY - 6.38/3.39
158°C
233/248°C
1210/1210
STEAM
2ND SS
193/201°C
50638/45444
DUTY - 7.31/3.81
217°C
299/303°C
475/475
STEAM @ 493°C
3RD SS
261/267°C
40249/46602
CRUDE FEED
324°C
STEAM
3069/3069
321°C
226 KPA
321°C
TOPPED CRUDE
Davy McKee Corporation
CHICAGO ILLINOIS
MAZOVIAN REFINERY
PLOCK, POLAND
ATMOSPHERIC CRUDE TOWER
SIMULATION CASE 4
DWG. No. 2063-32-05-107
0
10/30/91 A EJF FOR EVALUATION REPORT
5/20/92 0 EJF AW FOR FINAL REPORT
DATE REV BY APPR DESCRIPTION

FIGURE 8

22

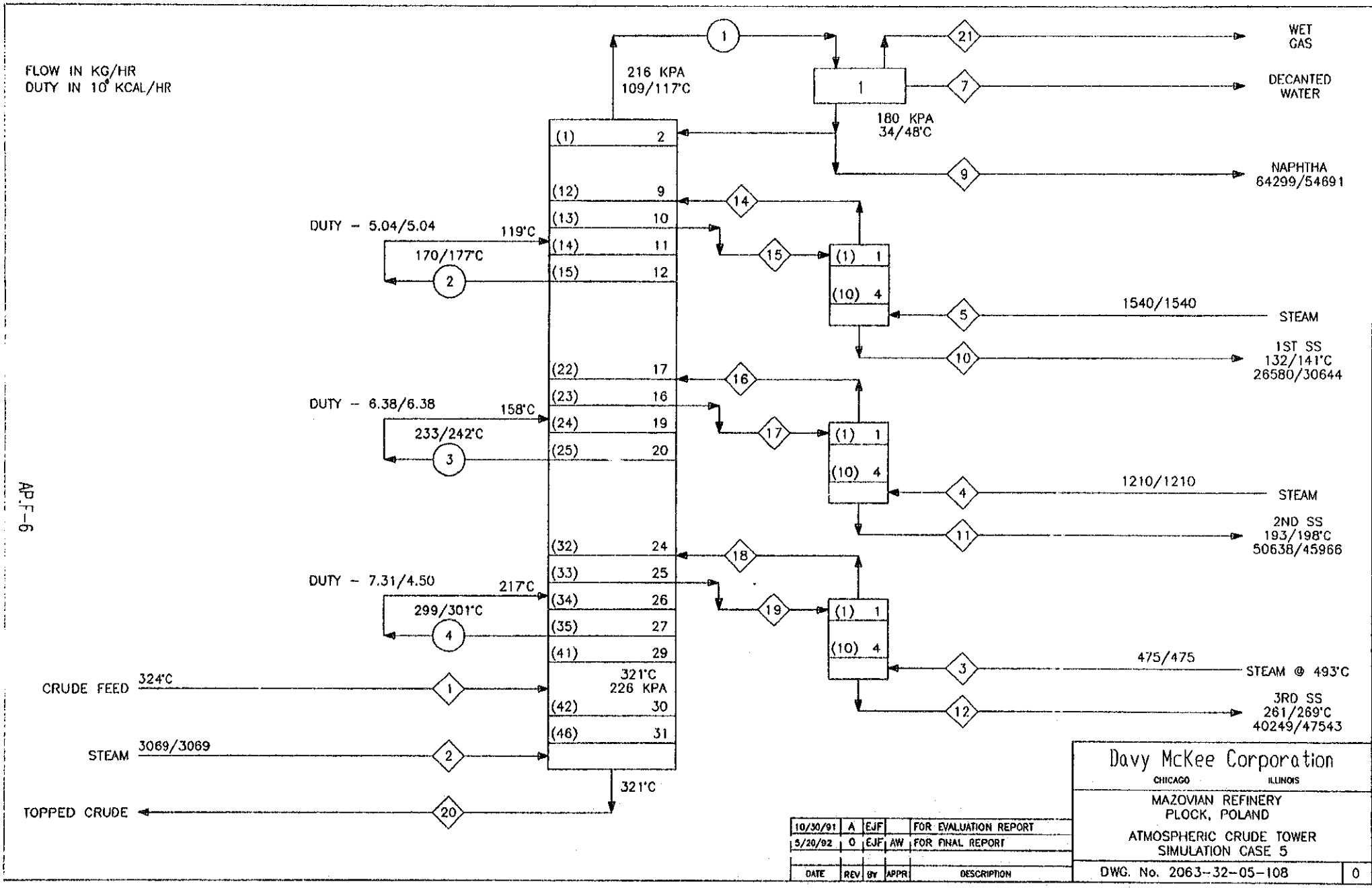
FLOW IN KG/HR
DUTY IN 10⁶ KCAL/HR
216 KPA
109/117°C
180 KPA
34/48°C
WET GAS
DECANTED WATER
NAPHTHA
64299/54691
DUTY - 5.04/5.04
119°C
170/177°C
1540/1540
STEAM
1ST SS
132/141°C
26580/30644
DUTY - 6.38/6.38
158°C
233/242°C
1210/1210
STEAM
2ND SS
193/198°C
50638/45966
DUTY - 7.31/4.50
217°C
299/301°C
475/475
STEAM @ 493°C
3RD SS
261/269°C
40249/47543
CRUDE FEED
324°C
321°C
226 KPA
STEAM
3069/3069
321°C
TOPPED CRUDE
Davy McKee Corporation
CHICAGO ILLINOIS
MAZOVIAN REFINERY
PLOCK, POLAND
ATMOSPHERIC CRUDE TOWER
SIMULATION CASE 5
DWG. No. 2063-32-05-108
0
10/30/91 A EJF FOR EVALUATION REPORT
5/20/92 0 EJF AW FOR FINAL REPORT
DATE REV BY APPR DESCRIPTION

FIGURE 9

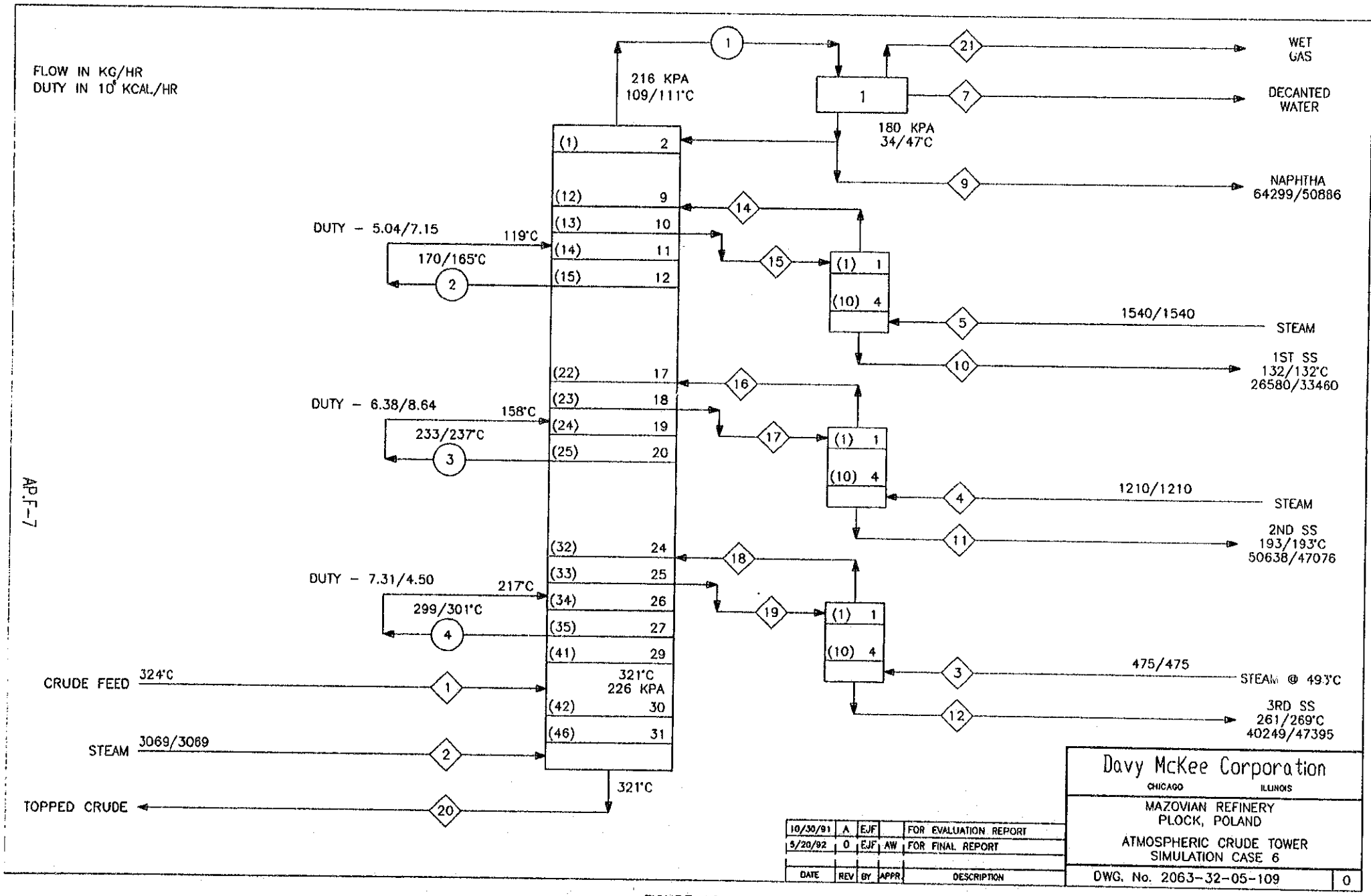
FLOW IN KG/HR
DUTY IN 10⁶ KCAL/HR
216 KPA
109/111°C
180 KPA
34/47°C
WET GAS
DECANTED WATER
NAPHTHA
64299/50886
DUTY – 5.04/7.15
119°C
170/165°C
1540/1540
STEAM
1ST SS
132/132°C
26580/33460
DUTY – 6.38/8.64
158°C
233/237°C
1210/1210
STEAM
2ND SS
193/193°C
50638/47076
DUTY – 7.31/4.50
217°C
299/301°C
475/475
STEAM @ 493°C
3RD SS
261/269°C
40249/47395
CRUDE FEED
324°C
321°C
226 KPA
STEAM
3069/3069
TOPPED CRUDE
321°C
Davy McKee Corporation
CHICAGO ILLINOIS
MAZOVIAN REFINERY
PLOCK, POLAND
ATMOSPHERIC CRUDE TOWER
SIMULATION CASE 6
DWG. No. 2063-32-05-109
0
DATE REV BY APPR DESCRIPTION
10/30/91 A EJF FOR EVALUATION REPORT
5/20/92 0 EJF AW FOR FINAL REPORT

FIGURE 10

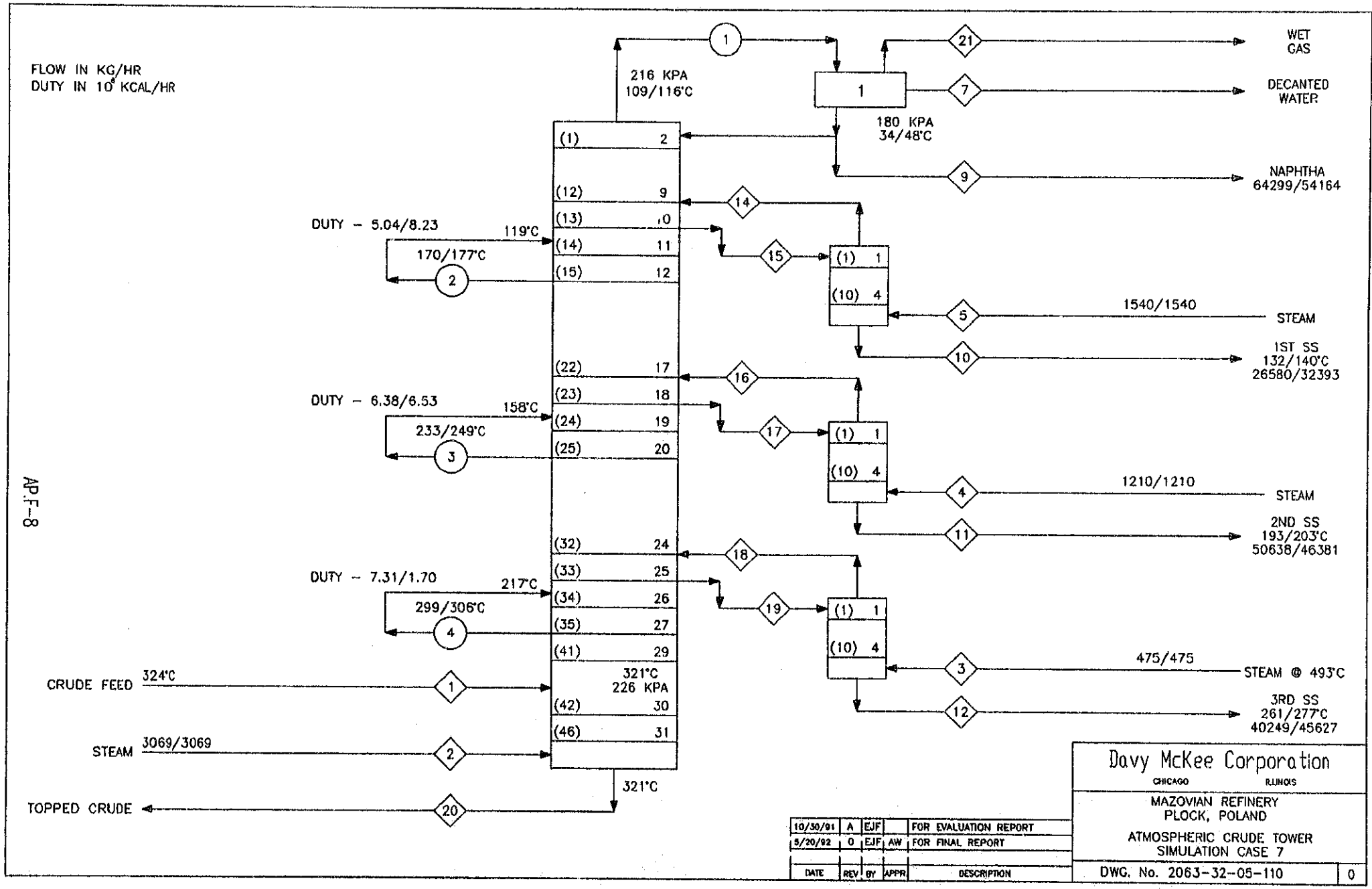
FLOW IN KG/HR
DUTY IN 10⁶ KCAL/HR
216 KPA
109/116°C
180 KPA
34/48°C
WET GAS
DECANTED WATER
NAPHTHA
64299/54164
DUTY – 5.04/8.23
119°C
170/177°C
1540/1540
STEAM
1ST SS
132/140°C
26580/32393
DUTY – 6.38/6.53
158°C
233/249°C
1210/1210
STEAM
2ND SS
193/203°C
50638/46381
DUTY – 7.31/1.70
217°C
299/306°C
475/475
STEAM @ 493°C
3RD SS
261/277°C
40249/45627
CRUDE FEED
324°C
STEAM
3069/3069
321°C
226 KPA
TOPPED CRUDE
321°C
Davy McKee Corporation
CHICAGO ILLINOIS
MAZOVIAN REFINERY
PLOCK, POLAND
ATMOSPHERIC CRUDE TOWER
SIMULATION CASE 7
DWG. No. 2063-32-05-110
0
10/30/91 A EJF FOR EVALUATION REPORT
5/20/92 0 EJF AW FOR FINAL REPORT
DATE REV BY APPR DESCRIPTION

FIGURE 11

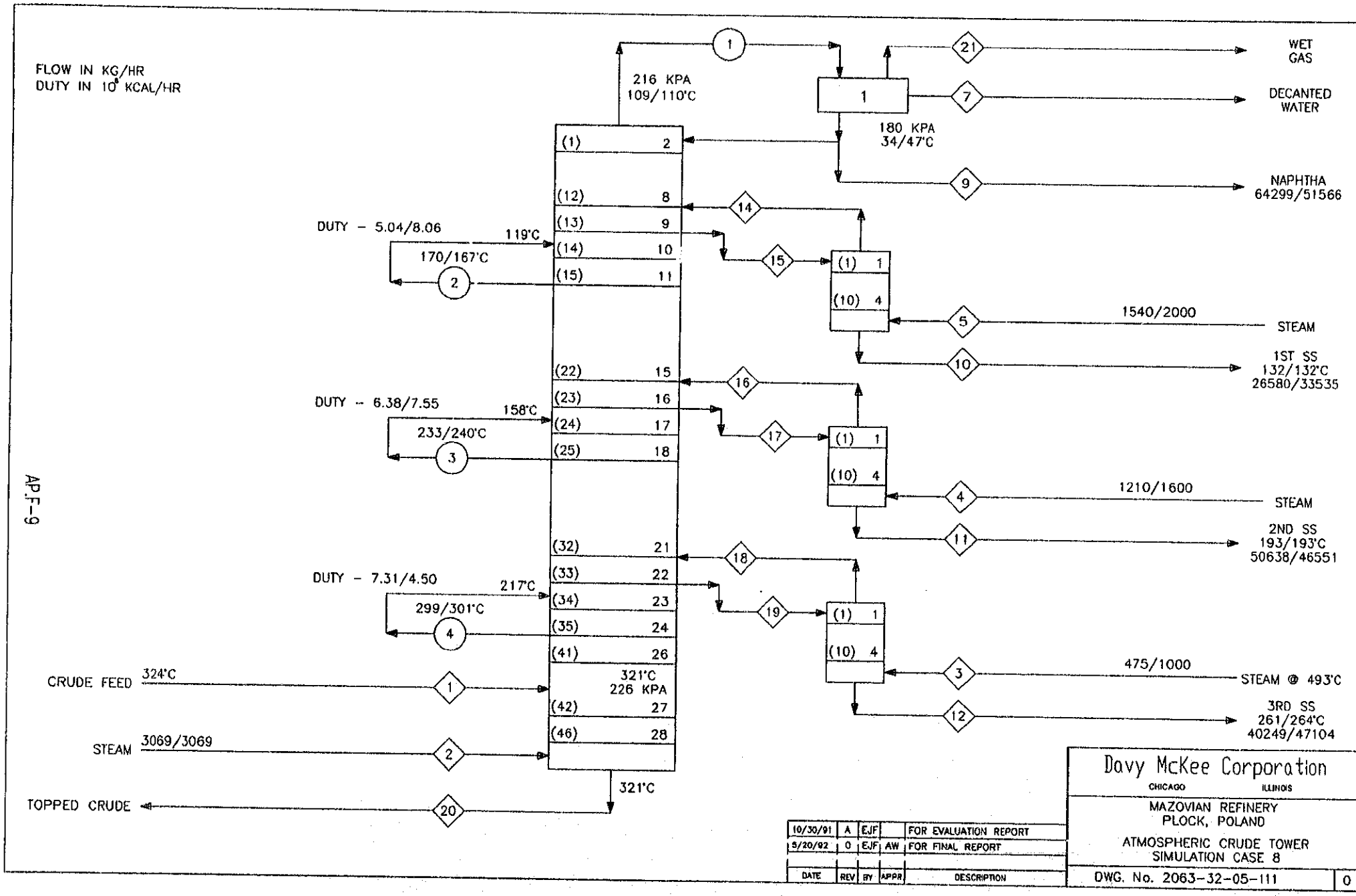
FLOW IN KG/HR
DUTY IN 10⁶ KCAL/HR
216 KPA
109/110°C
180 KPA
34/47°C
WET GAS
DECANTED WATER
NAPHTHA
64299/51566
DUTY – 5.04/8.06
119°C
170/167°C
1540/2000
STEAM
1ST SS
132/132°C
26580/33535
DUTY – 6.38/7.55
158°C
233/240°C
1210/1600
STEAM
2ND SS
193/193°C
50638/46551
DUTY – 7.31/4.50
217°C
299/301°C
475/1000
STEAM @ 493°C
3RD SS
261/264°C
40249/47104
CRUDE FEED
324°C
321°C
226 KPA
STEAM
3069/3069
TOPPED CRUDE
321°C
Davy McKee Corporation
CHICAGO ILLINOIS
MAZOVIAN REFINERY
PLOCK, POLAND
ATMOSPHERIC CRUDE TOWER
SIMULATION CASE 8
DWG. No. 2063-32-05-111
0
10/30/91 A EJF FOR EVALUATION REPORT
5/20/92 0 EJF AW FOR FINAL REPORT
DATE REV BY APPR DESCRIPTION

FIGURE 12

- Temperatures
  - Crude feed
  - Flash zone
  - Tower overhead
  - Overhead drum
  - Products from strippers
  - Pumparounds draw and return
- Configuration of the crude tower and strippers

The test run data also includes gravities and ASTM D86 distillations for the overhead naphtha (as a stabilized light and intermediate naphtha), the 1st side stream product which is a 202°C (396°F) EP naphtha, the 2nd side stream product which is a 283°C (541°F) EP kerosine and the 3rd side stream product which is a 358°C (676°F) 90% point heavy No. 2 fuel oil.

With the test run data it will be possible to compare product mass flow rates, tower temperature profiles, ASTM D86 distillations and product gravities for the simulations.

BASIS OF SIMULATION

For a fixed system pressure and a given crude tower/side stream stripper configuration the simulation method allows certain parameters to be specified as objectives or constraints but provides that an equal number of parameters be allowed to vary within feasible limits. This is based on the phase rule and an analysis of the degrees of freedom for a distillation tower which seems rather intuitive but is not. The parameters involved are typically product rates, condenser duty, pumparound duties, product qualities (in this application distillation specifications such as ASTM D86) and temperatures. These parameters can be either specifications or variables.

The product rates can be fixed by either specifying the mass flow rate from the strippers and allowing the side stream draw rates to vary at constant pumparound duties or specifying the ASTM D86 95% point (or 90% point) and allowing the product rates to vary to meet that specification at constant pumparound duties. These cases represent the fixed product rate simulation cases and they are

mutually exclusive. With the product rates defined by the ASTM D86 95% point, the temperatures of the products from the strippers can also be specified (within limits) by allowing a pumparound duty to vary for each product temperature specified. This case represents the fixed temperature profile simulation case. Also with the product rates defined by the ASTM D86 95% point, the ASTM D86 10% point can be specified (within limits) by allowing a pumparound duty to vary for each ASTM D86 10% point specified. The ASTM D86 10% point was used rather then the more conventional ASTM D86 5% point because data was available for the 10% point and not for the 5% point. This case represents the controlled ASTM distillation simulation case. It is also possible to have permutations of these cases by varying the number of theoretical trays and/or the stripping steam rates.

RESULTS

The results of the simulations are summarized in Table 1 and shown on the attached sketches as cases 1 through 8. The column summary from each of the simulations is also attached. The definition of these cases are as follows.

Case 1 — Fixed product rates with fixed pumparound rates. The side stream draw rates are allowed to vary to meet a fixed mass product rate from the strippers. This case is the simplest and the most direct approach but it is not confirmed by the temperature data or the ASTM D86 distillations and gravities. (Figure 5)

Case 2 — Fixed product rates with fixed pumparound rates. The product rate is fixed by the ASTM D86 95% point (or 90% point). The product rates for this case and all the other cases substantially differ from the test results. The tower temperature profile is higher than the test results but the simulation is in fair agreement with ASTM D86 distillations and product gravities. (Figure 6)

Case 3 — Controlled tower temperature profile. Case 2 with fixed product temperatures from the side stream strippers. A pumparound is allowed to vary for each side stream stripper product temperature fixed. The tower temperature profile is improved but the ASTM D86 distillations are not as good as Case 2. The simulation could not reduce the 3rd side stream temperature to match the test results because the bottom pumparound duty can not be increased above 4.5 M Kcal/hr as noted below. (Figure 7)

Case 4 — Controlled product quality. Case 2 with fixed ASTM D86 10% point for the side stream products. A pumparound is allowed to vary for each side stream product ASTM D86 10% point fixed. All product quality specifications are met as ASTM D86 10% and 90% points. The tower temperature profile is not as good as Case 3. Best simulation for product gravities. (Figure 8)

Case 5 — Case 2 with 31 theoretical trays instead of 28 theoretical trays. Same comments as Case 2. The additional trays are not justified. (Figure 9)

Case 6 — Case 3 with 31 theoretical trays instead of 28 theoretical trays. Same comments as Case 3. The additional trays show a slight improvement. (Figure 10)

Case 7 — Case 4 with 31 theoretical trays instead of 28 theoretical trays. Same comments as Case 4. The additional trays are not justified. (Figure 11)

Case 8 — Case 2 with higher stripping steam rates. This case has the best overall tower temperature profile and the ASTM D86 distillations and gravities are good. This case indicates that the recorded stripping steam rates might be in error. (Figure 12)

In all of the above cases the pressure was fixed as 180 kPa at the condenser, 216 kPa at the tower overhead and 226 kPa at the flash zone. The feed temperature was fixed at 324°C which resulted in a simulated flash zone temperature of 322°C which agreed with the test results of 321°C. In all cases the dry gas was fixed at 1262 kg/hr.

The test results indicated that the overhead vapors were compressed to about 900 kPa. The dry gas rate at these conditions was given as 1262 kg/hr with the overhead condenser operating at 34°C and 180 kPa. The simulation would not duplicate this result. The simulation indicated that the dry gas was 1262 kg/hr with no compressor and the overhead condenser operating at between 46°C and 52°C at 180 kPa. This difference could be due to a faulty light ends analysis or conceivably the compressor was not in operation during the test run. Any uncertainties in the overhead system would not seriously affect the rest of the tower simulation.

The pumparound duties were calculated from the pumparound rates and the draw and return temperatures given in the test results. The bottom pumparound duty was calculated to be 7.31 million Kcal/hr. The simulation would not duplicate this result. The highest bottom pumparound duty used for the simulation was 4.50 million Kcal/hr. The 4.50 million Kcal/hr duty was limited by "drying up" the reflux below the bottom draw off tray.

The number of theoretical trays was established as follows for cases 1, 2, 3, 4 and 8.

	Actual Trays	Theoretical Trays	Tray Efficiency
Condenser	-	1	100
Naphtha/1st SS	13	8	62
Top P/A	2	2	N/A
1st SS/2nd SS	8	5	63
Middle P/A	2	2	N/A
2rd SS/3rd SS	8	4	50
Bottom P/A	2	2	N/A
3rd SS/Flash Zone	6	2	33
Flash Zone/Bottom	5	2	40
Total Tower	46	28	
Side stream Strippers (SS)	10	4	40

These are rather high tray efficiencies for a crude distillation but they were used because of the nature of the light distillate products produced and because of the high ASTM D86 gaps indicated by the test results. Both higher and lower tray efficiencies were evaluated. Higher tray efficiencies are indicated by the test results for the ASTM D86 distillations and are shown as cases 5, 6 and 7 where one additional tray was added between each fractionating section.

CONCLUSION

In comparing the simulations with the test run data it is necessary to determine what test run data is most reliable and which test run data is questionable. Laboratory data such as the ASTM D86 distillation of the cuts and gravities of the cuts should be considered the most accurate measurements because they are taken under more favorable conditions. The simulation method takes a whole crude TBP and breaks it down into pseudo-component cuts and properties. The distillation process separate these pseudo-components into products which are defined by their TBP. The TBP of the products are converted to an ASTM D86 distillation. These calculated ASTM D86 distillations are then compared with the laboratory results. The whole process from crude TBP to product ASTM D86 is empirical and intrinsically subject to error but is the best available at this time. The operating data from the crude unit consists of flow rates based on orifice meters (assumed based on the age of the unit) and temperatures based on thermocouple readings. It would only be a matter of speculation to judge which of these is the most accurate in an existing unit but the temperature data points are confirmed by the laboratory data for the ASTM D86 distillations and the product gravities. The pumparound duties are subject to the errors in both the flow measurements and two temperature measurements and are the least accurate test run data. Therefore, since the temperature profile data is confirmed by the ASTM D86 distillations and the product gravities the best simulations are cases 3, 4 and 6. More data would be required to confirm these conclusions.

TABLE AP-E.1 - CRUDE OIL PROPERTIES

Crude Name Source (Country)	Romashinko USSR
Crude	
Gravity °API	32.5
Sulfur wt%	0.86
Pour Point °F	1.4
Viscosity, cs at 40°C	7.7
Conradson Carbon, wt%	5.4
Asphaltenes & Resins, Vol.%	1.5
Metals, Ni + Va, ppm	-
Gasoline C-405°F (C_5-207°C)	
Yield, Vol %	22.1
Sulfur, wt%	0.1
Octane, F-1, 3 ml TEL	-
Light Gas Oil, 405-650°F (207-344°C)	
Yield, vol %	28
Gravity, °API	38
Sulfur, wt%	0.5
Pour Point °F	-4
Characterization Factor	-

TABLE AP-E.1 - CRUDE OIL PROPERTIES - continued

Crude Name Source (Country)	Romashinko USSR
Heavy Gas Oil, 650-1000°F (344-538°C)	
Yield vol%	27
Gravity °API	36
Sulfur wt%	1.5
Viscosity, cs at 50°C	19
Wax content wt%	6
Characterization Factor	-
Residium 1000°F PLUS	
Yield vol%	23
Gravity °API	16
Sulfur wt%	1.8
Viscosity, cs at 210°F	109

TABLE F.2 - PLOCK CRUDE UNIT SIMULATION

CONTRACT 2063

DATE 02-Oct-91

CASE	TEST RUN	1	2	3	4	5	6	7	8
				NO OF THEORETICAL TRAYS					
CRUDE TOWER	46 ACTUAL	28	28	28	28	31	31	31	28
STRIPPERS	10 ACTUAL	4	4	4	4	4	4	4	4
PRODUCT				FLOW RATES		KG/HR			
DRY GAS		1262	1262 *	1262 *	1262 *	1262 *	1262 *	1262 *	1262 *
NAPH		64299	64300 *	53983	50644	53892	54691	50886	54164	51566
1st SS		26580	26579 *	30584	33346	32736	30644	33460	32393	33535
2nd SS		50638	50638 *	45889	46501	45444	45966	47076	46381	46551
3rd SS		40249	40249 *	48589	48546	46602	47543	47395	45627	47104
BOTTOMS		217327	217328	220048	220056	220418	220250	220276	220529	220338
REFLUX		57284	61104	71171	39943	66212	70288	37941	63561	43589
STRIPPING	STEAM			FLOW RATES		KG/HR			
1st SS		1540	1540	1540	1540	1540	1540	1540	1540	2000
2nd SS		1210	1210	1210	1210	1210	1210	1210	1210	1600
3rd SS		475	457	457	457	475	475	475	475	1000
BOTTOMS		3069	3069	3069	3069	3069	3069	3069	3069	3069
PUMPAROUND				DUTY		M KCAL/HR			
TOP		5.04	5.04	5.04	7.39	9.77	5.04	7.15	8.23	8.06
MID		6.38	6.38	6.38	8.16	3.39	6.38	8.64	6.53	7.55
BOTTOM		7.31	4.50	4.50	4.50	3.81	4.50	4.50	1.70	4.50
O/F LV %			1.76	2.48	2.78	2.58	2.53	2.53	2.60	2.55
TEMPERATURE				PROFILE		°C			
NAPH		34	52	48	46	49	48	47	48	47
OVERHEAD		109	129	116	111	114	117	111	116	110
1st SS		132	150	140	132 *	138	141	132 *	140	132 *
TOP P/A		170	185	177	166	177	177	165	177	167
2nd SS		193	208	197	193 *	201	198	193 *	203	193 *
MID P/A		233	252	242	238	248	242	237	249	240
3rd SS		261	273	268	268	267	269	269	277	264
BOT P/A		299	304	302	302	303	301	301	306	301
FLASH ZONE		321	322	322	322	322	322	322	322	322
BOTTOMS		321	321	321	321	321	321	321	321	321
ASTM - D86				DISTILLATION		°C			
NAPH EP		148	168	148 *	148 *	148 *	148 *	148 *	148 *	148 *
1st SS 10%		150	163	150	141	150 *	151	141	150 *	144
1st SS 95%		191	204	191 *	191 *	191 *	191 *	191 *	191 *	191 *
2nd SS 10%		205	212	200	198	205 *	202	198	205 *	201
2nd SS 95%		275	292	275 *	275 *	275 *	275 *	275 *	275 *	275 *
3rd SS 10%		278	279	269	269	277 *	271	271	278 *	275
3rd SS 90%		358	371	358 *	358 *	358 *	358 *	358 *	358 *	358 *
GRAVITY						KG/M3			
1st SS		777	787	779	776	779	779	776	779	777
2nd SS		821	826	817	817	819	818	817	819	818
3rd SS		858	866	860	860	861	860	860	861	861

* INDICATES SPECIFICATIONS USED FOR THE SIMULATION

TABLE F.2 - PLOCK CRUDE UNIT SIMULATION - continued

```
SIMULATION SCIENCES INC.                    R                                PAGE P-5
PROJECT  PLOCK_1                      PRO/II  VERSION 3.02                    386/EM
PROBLEM  CRUDE TOWER                        OUTPUT                             LME
                                        COLUMN SUMMARY                      09/16/91
==============================================================================
```

UNIT 2, 'COL1', 'CRUDE TOWER'

TOTAL NUMBER OF ITERATIONS

IN/OUT METHOD 6

COLUMN SUMMARY

TRAY	TEMP DEG C	PRESSURE KPA	NET FLOW RATES LIQUID KG-MOL/HR	VAPOR	FEED	PRODUCT	HEATER DUTIES M*KCAL/HR
1	52.0	180.00	667.2			23.0V 702.1L 334.8W	-18.1501
2	128.6	216.00	691.8	1727.1			
3	146.9	216.40	693.7	1751.8			
4	153.8	216.80	680.0	1753.6			
5	157.7	217.20	664.1	1739.9			
6	160.6	217.60	647.0	1724.1			
7	163.3	218.00	627.3	1706.9			
8	166.2	218.40	603.3	1687.2			
9	169.6	218.80	308.7	1663.2	160.3V	263.3L	
10	175.0	219.20	1568.1	1471.6			-5.0400
11	185.1	219.60	702.4	1844.5			
12	193.4	220.00	669.4	1865.3			
13	199.3	220.40	627.0	1832.3			
14	204.9	220.80	572.0	1789.9			
15	211.6	221.20	495.6	1734.9			
16	220.8	221.60	67.9	1658.5	137.4V	334.1L	
17	234.4	222.00	860.2	1427.6			-6.3800
18	252.3	222.40	354.0	1704.3			
19	264.4	222.80	325.8	1713.7			
20	270.2	223.20	291.8	1685.4			
21	274.7	223.60	246.0	1651.4			
22	279.9	224.00	1.5	1605.7	52.8V	178.6L	
23	288.1	224.40	387.8	1487.0			-4.5000
24	304.4	224.80	89.6	1603.1			
25	314.8	225.20	60.8	1575.2			
26	318.9	225.60	22.1	1546.3	1247.3V		
27	321.9	226.00	518.7	260.3	545.3L		
28	321.0	227.20		211.6	170.4V	477.5L	
SIDESTRIPPER SS01							
1/ 29	160.4	220.00	239.2		263.3L	160.3V	
2/ 30	155.4	220.00	228.3	136.3			
3/ 31	151.9	220.00	220.7	125.3			
4/ 32	149.9	220.00		117.7	85.5V	188.4L	

TABLE F.2 - PLOCK CRUDE UNIT SIMULATION - continued

```
SIMULATION SCIENCES INC.                    R                                  PAGE P-6
PROJECT  PLOCK_1                      PRO/II  VERSION 3.02                      386/EM
PROBLEM  CRUDE TOWER                          OUTPUT                              LME
                                            COLUMN SUMMARY                    09/16/91
==============================================================================
```

UNIT 2, 'COL1', 'CRUDE TOWER' (CONT)

SIDESTRIPPER SS02

TRAY	TEMP DEG C	PRESSURE KPA	NET FLOW RATES LIQUID	VAPOR	FEED	PRODUCT (KG-MOL/HR)	HEATER DUTIES M*KCAL/HR
1/ 33	216.3	222.00	311.7		334.1L	137.4V	
2/ 34	213.6	222.00	300.7	115.0			
3/ 35	211.0	222.00	291.2	104.0			
4/ 36	208.0	222.00		94.4	67.2V	263.9L	

SIDESTRIPPER SS03

1/ 37	277.9	225.00	170.0		178.6L	52.8V	
2/ 38	276.7	225.00	166.0	44.1			
3/ 39	275.5	225.00	162.4	40.1			
4/ 40	273.4	225.00		36.5	26.4V	152.2L	

FEED AND PRODUCT STREAMS

TYPE	STREAM	PHASE	FROM TRAY	TO TRAY	LIQUID FRACTION	FLOW RATES KG-MOL/HR	HEAT RATES M*KCAL/HR
FEED	14	VAPOR		9	0.0000	160.30	2.2863
FEED	16	VAPOR		16	0.0000	137.36	2.5311
FEED	18	VAPOR		22	0.0000	52.77	1.2697
FEED	1A	MIXED		27	0.3042	1792.66	76.7237
FEED	2	VAPOR		28	0.0000	170.36	2.5405
PRODUCT	21	VAPOR	1			23.04	0.1553
PRODUCT	9	LIQUID	1			702.11	0.8768
PRODUCT	7	WATER	1			334.80	0.3135
PRODUCT	15	LIQUID	9			263.26	2.6297
PRODUCT	17	LIQUID	16			334.11	6.3685
PRODUCT	19	LIQUID	22			178.63	6.3830
PRODUCT	20	LIQUID	28			477.50	34.5560

SIDESTRIPPER SS01

FEED	15	LIQUID		29	1.0000	263.26	2.6297
FEED	5	VAPOR		32	0.0000	85.48	1.2748
PRODUCT	14	VAPOR	29			160.30	2.2863
PRODUCT	10	LIQUID	32			188.44	1.6183

SIDESTRIPPER SS02

FEED	17	LIQUID		33	1.0000	334.11	6.3685
FEED	4	VAPOR		36	0.0000	67.17	1.0016
PRODUCT	16	VAPOR	33			137.36	2.5311
PRODUCT	11	LIQUID	36			263.92	4.8391

TABLE F.2 - PLOCK CRUDE UNIT SIMULATION - continued

```
SIMULATION SCIENCES INC.                    R                                PAGE P-7
PROJECT  PLOCK_1                      PRO/II  VERSION 3.02                    386/EM
PROBLEM  CRUDE TOWER                        OUTPUT                             LME
                                         COLUMN SUMMARY                     09/16/91
==============================================================================
```

UNIT 2, 'COL1', 'CRUDE TOWER' (CONT)

SIDESTRIPPER SS03

TYPE	STREAM	PHASE	FROM TRAY	TO TRAY	LIQUID FRACTION	FLOW RATES KG-MOL/HR	HEAT RATES M*KCAL/HR
FEED	19	LIQUID		37	1.0000	178.63	6.3830
FEED	3	VAPOR		40	0.0000	26.37	0.3932
PRODUCT	18	VAPOR	37			52.77	1.2697
PRODUCT	12	LIQUID	40			152.23	5.5066

OVERALL MASS BALANCE, (FEEDS - PRODUCTS) 4.5262E-05
OVERALL HEAT BALANCE, (H(IN) - H(OUT)) -1.7228E-03

PUMPAROUNDS

TRAY FROM	TRAY TO	TEMP, DEG C FROM	TEMP, DEG C TO	LIQUID FRACTION FROM	LIQUID FRACTION TO	RATES KG-MOL/HR	RATES K*KG/HR	RATES STD M3/HR
11	10	185.1	119.0	1.0000	1.0000	886.46	127.949	162.33
18	17	252.3	158.0	1.0000	1.0000	515.61	108.499	129.70
24	23	304.4	217.0	1.0000	1.0000	270.22	78.457	89.24

SPECIFICATIONS

PARAMETER TYPE	TRAY NO	COMP NO	SPECIFICATION TYPE	SPECIFIED VALUE	CALCULATED VALUE
STRM 9	1		WT RATE	6.430E+04	6.430E+04
STRM 21	1		WT RATE	1.262E+03	1.262E+03
STRM 10	32		WT RATE	2.658E+04	2.658E+04
STRM 11	36		WT RATE	5.064E+04	5.064E+04
STRM 12	40		WT RATE	4.025E+04	4.025E+04

REFLUX RATIOS

	REFLUX RATIOS MOLAR	WEIGHT	STD L VOL
REFLUX / FEED STREAM 1A	0.3722	0.1530	0.1859
REFLUX / VAPOR DISTILLATE	28.9579	44.8721	36.9593
REFLUX / LIQUID DISTILLATE	0.9503	0.9503	0.9503
REFLUX / TOTAL DISTILLATE	0.9201	0.9298	0.9260

TABLE F.2 - PLOCK CRUDE UNIT SIMULATION - continued

```
SIMULATION SCIENCES INC.                    R                                  PAGE P-5
PROJECT   PLOCK_2                    PRO/II  VERSION 3.02                        386/EM
PROBLEM   CRUDE TOWER                       OUTPUT                                 LME
                                         COLUMN SUMMARY                        09/16/91
==============================================================================
```

UNIT 2, 'COL1', 'CRUDE TOWER'

TOTAL NUMBER OF ITERATIONS

IN/OUT METHOD 6

COLUMN SUMMARY

TRAY	TEMP DEG C	PRESSURE KPA	NET FLOW RATES LIQUID	VAPOR KG-MOL/HR	FEED	PRODUCT	HEATER DUTIES M*KCAL/HR
1	47.9	180.00	816.3			22.9V 819.2L 334.8W	-17.8611
2	115.9	216.00	847.3	1792.9			
3	134.0	216.40	853.9	1823.9			
4	141.1	216.80	839.5	1830.5			
5	145.3	217.20	820.6	1816.1			
6	148.8	217.60	798.5	1797.2			
7	152.1	218.00	771.6	1775.1			
8	155.9	218.40	738.7	1748.3			
9	160.5	218.80	383.3	1715.3	170.2V	315.3L	
10	167.3	219.20	1851.2	1505.0			-5.040C
11	176.6	219.60	804.5	1900.4			
12	184.6	220.00	774.9	1926.2			
13	190.2	220.40	734.1	1896.6			
14	195.5	220.80	676.8	1855.8			
15	202.2	221.20	595.3	1798.5			
16	211.7	221.60	167.8	1717.0	141.2V	329.5L	
17	225.5	222.00	1095.5	1477.8			-6.380C
18	242.0	222.40	484.0	1784.4			
19	254.6	222.80	449.7	1794.0			
20	261.5	223.20	405.0	1759.7			
21	267.4	223.60	341.9	1715.0			
22	274.6	224.00	27.4	1651.9	57.5V	224.4L	
23	285.7	224.40	437.9	1504.3			-4.500C
24	301.5	224.80	120.7	1626.1			
25	312.1	225.20	84.9	1597.5			
26	317.2	225.60	31.9	1561.8	1247.3V		
27	321.8	226.00	528.1	261.4	545.3L		
28	320.8	227.20		212.3	170.4V	486.2L	
SIDESTRIPPER SS01							
1/ 29	151.6	220.00	288.7		315.3L	170.2V	
2/ 30	146.6	220.00	276.0	143.6			
3/ 31	142.9	220.00	266.9	131.0			
4/ 32	140.3	220.00		121.8	85.5V	230.5L	

TABLE F.2 - PLOCK CRUDE UNIT SIMULATION - continued

```
SIMULATION SCIENCES INC.                    R                                PAGE P-6
PROJECT  PLOCK_2                      PRO/II  VERSION 3.02                    386/EM
PROBLEM  CRUDE TOWER                        OUTPUT                              LME
                                       COLUMN SUMMARY                       09/16/91
==============================================================================
```

UNIT 2, 'COL1', 'CRUDE TOWER' (CONT)

SIDESTRIPPER SS02

TRAY	TEMP DEG C	PRESSURE KPA	NET FLOW RATES LIQUID KG-MOL/HR	VAPOR	FEED	PRODUCT	HEATER DUTIES M*KCAL/HR
1/ 33	206.3	222.00	305.9		329.5L	141.2V	
2/ 34	203.2	222.00	294.2	117.6			
3/ 35	200.2	222.00	284.2	105.8			
4/ 36	196.8	222.00		95.8	67.2V	255.5L	

SIDESTRIPPER SS03

1/ 37	272.6	225.00	214.6		224.4L	57.5V	
2/ 38	271.5	225.00	209.9	47.7			
3/ 39	270.3	225.00	205.5	43.0			
4/ 40	268.0	225.00		38.7	26.4V	193.2L	

FEED AND PRODUCT STREAMS

TYPE	STREAM	PHASE	FROM TRAY	TO TRAY	LIQUID FRACTION	FLOW RATES KG-MOL/HR	HEAT RATES M*KCAL/HR
FEED	14	VAPOR		9	0.0000	170.21	2.3467
FEED	16	VAPOR		16	0.0000	141.22	2.5099
FEED	18	VAPOR		22	0.0000	57.51	1.3946
FEED	1A	MIXED		27	0.3042	1792.66	76.7237
FEED	2	VAPOR		28	0.0000	170.36	2.5405
PRODUCT	21	VAPOR	1			22.87	0.1496
PRODUCT	9	LIQUID	1			619.18	0.6716
PRODUCT	7	WATER	1			334.59	0.2888
PRODUCT	15	LIQUID	9			315.27	2.7709
PRODUCT	17	LIQUID	16			329.54	5.5789
PRODUCT	19	LIQUID	22			224.37	7.4898
PRODUCT	20	LIQUID	28			486.16	34.9880
SIDESTRIPPER SS01							
FEED	15	LIQUID		29	1.0000	315.27	2.7709
FEED	5	VAPOR		32	0.0000	85.48	1.2748
PRODUCT	14	VAPOR	29			170.21	2.3467
PRODUCT	10	LIQUID	32			230.54	1.6991
SIDESTRIPPER SS02							
FEED	17	LIQUID		33	1.0000	329.54	5.5789
FEED	4	VAPOR		36	0.0000	67.17	1.0016
PRODUCT	16	VAPOR	33			141.22	2.5099
PRODUCT	11	LIQUID	36			255.49	4.0704

TABLE F.2 - PLOCK CRUDE UNIT SIMULATION - continued

```
SIMULATION SCIENCES INC.                    R                                PAGE P-7
PROJECT  PLOCK_2                     PRO/II  VERSION 3.02                     386/EM
PROBLEM  CRUDE TOWER                          OUTPUT                            LME
                                        COLUMN SUMMARY                      09/16/91
==============================================================================
```

UNIT 2, 'COL1', 'CRUDE TOWER' (CONT)

SIDESTRIPPER SS03

TYPE	STREAM	PHASE	FROM TRAY	TO TRAY	LIQUID FRACTION	FLOW RATES KG-MOL/HR	HEAT RATES M*KCAL/HR
FEED	19	LIQUID		37	1.0000	224.37	7.4898
FEED	3	VAPOR		40	0.0000	26.37	0.3932
PRODUCT	18	VAPOR	37			57.51	1.3946
PRODUCT	12	LIQUID	40			193.23	6.4886

OVERALL MASS BALANCE, (FEEDS - PRODUCTS) -1.7770E-04
OVERALL HEAT BALANCE, (H(IN) - H(OUT)) -3.3939E-03

PUMPAROUNDS

TRAY FROM	TRAY TO	TEMP, DEG C FROM	TEMP, DEG C TO	LIQUID FRACTION FROM	LIQUID FRACTION TO	RATES KG-MOL/HR	RATES K*KG/HR	RATES STD M3/HR
11	10	176.6	119.0	1.0000	1.0000	1072.50	147.121	188.26
18	17	242.0	158.0	1.0000	1.0000	621.13	121.922	147.31
24	23	301.5	217.0	1.0000	1.0000	288.63	81.120	92.75

SPECIFICATIONS

PARAMETER TYPE	TRAY NO	COMP NO	SPECIFICATION TYPE	SPECIFIED VALUE	CALCULATED VALUE
STRM 9	1		D86 EP	1.480E+02	1.480E+02
STRM 21	1		WT RATE	1.262E+03	1.262E+03
STRM 10	32		D86 95 PCT	1.910E+02	1.910E+02
STRM 11	36		D86 95 PCT	2.750E+02	2.750E+02
STRM 12	40		D86 90 PCT	3.580E+02	3.580E+02

REFLUX RATIOS

	REFLUX RATIOS MOLAR	WEIGHT	STD L VOL
REFLUX / FEED STREAM 1A	0.4553	0.1781	0.2197
REFLUX / VAPOR DISTILLATE	35.6943	53.0286	44.1686
REFLUX / LIQUID DISTILLATE	1.3184	1.3184	1.3184
REFLUX / TOTAL DISTILLATE	1.2714	1.2855	1.2796

TABLE F.2 - PLOCK CRUDE UNIT SIMULATION - continued

```
SIMULATION SCIENCES INC.                    R                                  PAGE P-5
PROJECT  PLOCK_3                      PRO/II  VERSION 3.02                      386/EM
PROBLEM  CRUDE TOWER                          OUTPUT                              LME
                                        COLUMN SUMMARY                        09/16/91
==============================================================================
```

UNIT 2, 'COL1', 'CRUDE TOWER'

TOTAL NUMBER OF ITERATIONS

IN/OUT METHOD 5

COLUMN SUMMARY

TRAY	TEMP DEG C	PRESSURE KPA	NET FLOW RATES LIQUID	VAPOR	FEED	PRODUCT	HEATER DUTIES M*KCAL/HR
			KG-MOL/HR				
1	46.4	180.00	464.0			22.8V 588.3L 334.2W	-13.6597
2	111.2	216.00	464.1	1409.4			
3	126.3	216.40	459.4	1409.4			
4	131.8	216.80	447.7	1404.8			
5	135.0	217.20	435.5	1393.1			
6	137.6	217.60	422.0	1380.8			
7	140.1	218.00	405.7	1367.3			
8	143.0	218.40	385.3	1351.1			
9	146.7	218.80	25.5	1330.7	162.3V	333.8L	
10	152.7	219.20	2532.2	1142.4			-7.3923
11	165.9	219.60	640.9	1652.6			
12	179.4	220.00	621.3	1757.8			
13	186.1	220.40	586.9	1738.1			
14	191.6	220.80	538.6	1703.8			
15	197.9	221.20	470.6	1655.5			
16	206.6	221.60	56.6	1587.5	138.4V	331.7L	
17	219.3	222.00	1282.2	1366.8			-8.1647
18	238.4	222.40	480.4	1752.2			
19	253.6	222.80	449.7	1790.5			
20	261.2	223.20	405.1	1759.8			
21	267.3	223.60	341.9	1715.2			
22	274.6	224.00	27.5	1652.0	57.5V	224.2L	
23	285.7	224.40	438.0	1504.4			-4.5000
24	301.5	224.80	120.8	1626.2			
25	312.1	225.20	85.0	1597.6			
26	317.2	225.60	31.9	1561.9	1247.3V		
27	321.6	226.00	528.1	261.4	545.3L		
28	320.8	227.20		212.3	170.4V	486.2L	
SIDESTRIPPER SS01							
1/ 29	140.0	220.00	311.7		333.8L	162.3V	
2/ 30	136.2	220.00	300.7	140.3			
3/ 31	133.4	220.00	292.4	129.2			
4/ 32	132.0	220.00		121.0	85.5V	257.0L	

TABLE F.2 - PLOCK CRUDE UNIT SIMULATION - continued

```
SIMULATION SCIENCES INC.                    R                                PAGE P-6
PROJECT  PLOCK_3                      PRO/II  VERSION 3.02                    386/EM
PROBLEM  CRUDE TOWER                          OUTPUT                            LME
                                        COLUMN SUMMARY                      09/16/91
==============================================================================
```

UNIT 2, 'COL1', 'CRUDE TOWER' (CONT)

SIDESTRIPPER SS02

TRAY	TEMP DEG C	PRESSURE KPA	NET FLOW RATES LIQUID	VAPOR	FEED	PRODUCT	HEATER DUTIES M*KCAL/HR
			KG-MOL/HR				
1/ 33	201.6	222.00	309.0		331.7L	138.4V	
2/ 34	198.6	222.00	297.8	115.7			
3/ 35	195.9	222.00	288.2	104.5			
4/ 36	193.0	222.00		94.9	67.2V	260.4L	

SIDESTRIPPER SS03

1/ 37	272.6	225.00	214.4		224.2L	57.5V	
2/ 38	271.5	225.00	209.7	47.7			
3/ 39	270.2	225.00	205.4	43.0			
4/ 40	267.9	225.00		38.7	26.4V	193.1L	

FEED AND PRODUCT STREAMS

TYPE	STREAM	PHASE	FROM TRAY	TO TRAY	LIQUID FRACTION	FLOW RATES KG-MOL/HR	HEAT RATES M*KCAL/HR
FEED	14	VAPOR		9	0.0000	162.28	2.0982
FEED	16	VAPOR		16	0.0000	138.39	2.3773
FEED	18	VAPOR		22	0.0000	57.51	1.3946
FEED	1A	MIXED		27	0.3042	1792.66	75.7237
FEED	2	VAPOR		28	0.0000	170.36	2.5405
PRODUCT	21	VAPOR	1			22.85	0.1477
PRODUCT	9	LIQUID	1			588.35	0.6066
PRODUCT	7	WATER	1			334.18	0.2790
PRODUCT	15	LIQUID	9			333.77	2.5230
PRODUCT	17	LIQUID	16			331.66	5.3931
PRODUCT	19	LIQUID	22			224.21	7.4831
PRODUCT	20	LIQUID	28			486.19	34.9891
SIDESTRIPPER SS01							
FEED	15	LIQUID		29	1.0000	333.77	2.5230
FEED	5	VAPOR		32	0.0000	85.48	1.2748
PRODUCT	14	VAPOR	29			162.28	2.0982
PRODUCT	10	LIQUID	32			256.98	1.6996
SIDESTRIPPER SS02							
FEED	17	LIQUID		33	1.0000	331.66	5.3931
FEED	4	VAPOR		36	0.0000	67.17	1.0016
PRODUCT	16	VAPOR	33			138.39	2.3773
PRODUCT	11	LIQUID	36			260.43	4.0170

TABLE F.2 - PLOCK CRUDE UNIT SIMULATION - continued

```
SIMULATION SCIENCES INC.                    R                                  PAGE P-7
PROJECT  PLOCK_3                      PRO/II  VERSION 3.02                      386/EM
PROBLEM  CRUDE TOWER                        OUTPUT                               LME
                                       COLUMN SUMMARY                          09/16/91
==============================================================================
```

UNIT 2, 'COL1', 'CRUDE TOWER' (CONT)

SIDESTRIPPER SS03

TYPE	STREAM	PHASE	FROM TRAY	TO TRAY	LIQUID FRACTION	FLOW RATES KG-MOL/HR	HEAT RATES M*KCAL/HR
FEED	19	LIQUID		37	1.0000	224.21	7.4831
FEED	3	VAPOR		40	0.0000	26.37	0.3932
PRODUCT	18	VAPOR	37			57.51	1.3946
PRODUCT	12	LIQUID	40			193.07	6.4816

OVERALL MASS BALANCE, (FEEDS - PRODUCTS) 1.8440E-05
OVERALL HEAT BALANCE, (H(IN) - H(OUT)) -3.5682E-03

PUMPAROUNDS

TRAY FROM	TRAY TO	TEMP, DEG C FROM	TEMP, DEG C TO	LIQUID FRACTION FROM	LIQUID FRACTION TO	RATES KG-MOL/HR	RATES K*KG/HR	RATES STD M3/HR
11	10	165.9	119.0	1.0000	1.0000	1996.49	267.114	343.18
18	17	238.4	158.0	1.0000	1.0000	840.14	163.506	197.79
24	23	301.5	217.0	1.0000	1.0000	288.65	81.120	92.75

SPECIFICATIONS

PARAMETER TYPE	TRAY NO	COMP NO	SPECIFICATION TYPE	SPECIFIED VALUE	CALCULATED VALUE
STRM 9	1		D86 EP	1.480E+02	1.480E+02
STRM 10	32		TEMPERATURE	1.320E+02	1.320E+02
STRM 11	36		TEMPERATURE	1.930E+02	1.930E+02
STRM 21	1		WT RATE	1.262E+03	1.262E+03
STRM 10	32		D86 95 PCT	1.910E+02	1.910E+02
STRM 11	36		D86 95 PCT	2.750E+02	2.750E+02
STRM 12	40		D86 90 PCT	3.580E+02	3.580E+02

REFLUX RATIOS

	REFLUX RATIOS MOLAR	WEIGHT	STD L VOL
REFLUX / FEED STREAM 1A	0.2588	0.0999	0.1239
REFLUX / VAPOR DISTILLATE	20.3108	29.9046	24.9721
REFLUX / LIQUID DISTILLATE	0.7887	0.7887	0.7887
REFLUX / TOTAL DISTILLATE	0.7592	0.7679	0.7642

TABLE F.2 - PLOCK CRUDE UNIT SIMULATION - continued

```
SIMULATION SCIENCES INC.                    R                                PAGE P-5
PROJECT  PLOCK_4                      PRO/II  VERSION 3.02                     386/EM
PROBLEM  CRUDE TOWER                          OUTPUT                             LME
                                         COLUMN SUMMARY                     09/17/91
==============================================================================
```

UNIT 2, 'COL1', 'CRUDE TOWER'

TOTAL NUMBER OF ITERATIONS

IN/OUT METHOD 5

COLUMN SUMMARY

TRAY	TEMP DEG C	PRESSURE KPA	NET FLOW RATES LIQUID KG-MOL/HR	VAPOR	FEED	PRODUCT	HEATER DUTIES M*KCAL/HR
1	47.9	180.00	759.8			22.9V 818.4L 410.5W	-17.8013
2	114.0	216.00	778.6	1811.6			
3	131.6	216.40	781.9	1830.4			
4	138.4	216.80	767.5	1833.7			
5	142.4	217.20	749.5	1819.3			
6	145.7	217.60	728.5	1801.3			
7	148.9	218.00	703.1	1780.3			
8	152.6	218.40	672.0	1754.9			
9	157.0	218.80	292.2	1723.8	206.1V	341.8L	
10	163.9	219.20	3088.8	1479.7			-9.7697
11	176.8	219.60	1145.1	2200.9			
12	188.1	220.00	1120.4	2332.6			
13	195.0	220.40	1070.1	2308.0			
14	201.3	220.80	994.8	2257.6			
15	208.9	221.20	887.1	2182.4			
16	219.6	221.60	418.1	2074.6	180.9V	341.7L	
17	234.8	222.00	865.0	1766.4			-3.3865
18	247.9	222.40	535.0	1910.6			
19	257.4	222.80	495.7	1883.4			
20	263.6	223.20	448.8	1844.1			
21	269.3	223.60	382.5	1797.1			
22	276.5	224.00	57.5	1730.8	101.7V	229.1L	
23	288.2	224.40	397.2	1533.2			-3.8093
24	302.5	224.80	124.0	1631.7			
25	312.1	225.20	87.9	1599.6			
26	317.0	225.60	33.3	1563.6	1247.3V		
27	321.7	226.00	529.4	261.6	545.3L		
28	320.7	227.20		212.4	170.4V	487.4L	
SIDESTRIPPER SS01							
1/ 29	148.0	220.00	312.8		341.8L	206.1V	
2/ 30	143.1	220.00	299.4	177.1			
3/ 31	139.8	220.00	290.1	163.6			
4/ 32	138.1	220.00		154.4	111.0V	246.7L	

TABLE F.2 - PLOCK CRUDE UNIT SIMULATION - continued

```
SIMULATION SCIENCES INC.                    R                                PAGE P-6
PROJECT  PLOCK_4                      PRO/II  VERSION 3.02                     386/EM
PROBLEM  CRUDE TOWER                        OUTPUT                              LME
                                         COLUMN SUMMARY                     09/17/91
==============================================================================
```

UNIT 2, 'COL1', 'CRUDE TOWER' (CONT)

SIDESTRIPPER SS02

TRAY	TEMP DEG C	PRESSURE KPA	NET FLOW RATES LIQUID	VAPOR	FEED	PRODUCT (KG-MOL/HR)	HEATER DUTIES M*KCAL/HR
1/ 33	212.5	222.00	311.4		341.7L	180.9V	
2/ 34	208.3	222.00	296.8	150.6			
3/ 35	204.5	222.00	284.8	136.0			
4/ 36	200.6	222.00		123.9	88.8V	249.6L	

SIDESTRIPPER SS03

1/ 37	273.2	225.00	213.8		229.1L	101.7V	
2/ 38	271.3	225.00	207.1	86.4			
3/ 39	269.4	225.00	201.1	79.7			
4/ 40	266.5	225.00		73.8	55.5V	182.9L	

FEED AND PRODUCT STREAMS

TYPE	STREAM	PHASE	FROM TRAY	TO TRAY	LIQUID FRACTION	FLOW RATES KG-MOL/HR	HEAT RATES M*KCAL/HR
FEED	14	VAPOR		9	0.0000	206.08	2.7823
FEED	16	VAPOR		16	0.0000	180.92	3.3412
FEED	18	VAPOR		22	0.0000	101.74	2.3843
FEED	1A	MIXED		27	0.3042	1792.66	76.7237
FEED	2	VAPOR		28	0.0000	170.36	2.5405
PRODUCT	21	VAPOR	1			22.87	0.1496
PRODUCT	9	LIQUID	1			618.41	0.6699
PRODUCT	7	WATER	1			410.52	0.3540
PRODUCT	15	LIQUID	9			341.79	2.9045
PRODUCT	17	LIQUID	16			341.72	6.1514
PRODUCT	19	LIQUID	22			229.08	7.7302
PRODUCT	20	LIQUID	28			487.36	35.0466
SIDESTRIPPER SS01							
FEED	15	LIQUID		29	1.0000	341.79	2.9045
FEED	5	VAPOR		32	0.0000	111.02	1.6556
PRODUCT	14	VAPOR	29			206.08	2.7823
PRODUCT	10	LIQUID	32			246.74	1.7779
SIDESTRIPPER SS02							
FEED	17	LIQUID		33	1.0000	341.72	6.1514
FEED	4	VAPOR		36	0.0000	88.81	1.3245
PRODUCT	16	VAPOR	33			180.92	3.3412
PRODUCT	11	LIQUID	36			249.62	4.1347

TABLE F.2 - PLOCK CRUDE UNIT SIMULATION - continued

```
SIMULATION SCIENCES INC.                    R                                PAGE P-7
PROJECT  PLOCK_4                     PRO/II  VERSION 3.02                     386/EM
PROBLEM  CRUDE TOWER                          OUTPUT                             LME
                                        COLUMN SUMMARY                      09/17/91
==============================================================================
```

UNIT 2, 'COL1', 'CRUDE TOWER' (CONT)

SIDESTRIPPER SS03

TYPE	STREAM	PHASE	FROM TRAY	TO TRAY	LIQUID FRACTION	FLOW RATES KG-MOL/HR	HEAT RATES M*KCAL/HR
FEED	19	LIQUID		37	1.0000	229.08	7.7302
FEED	3	VAPOR		40	0.0000	55.51	0.8276
PRODUCT	18	VAPOR	37			101.74	2.3843
PRODUCT	12	LIQUID	40			182.85	6.1737

OVERALL MASS BALANCE, (FEEDS - PRODUCTS) -5.8673E-05
OVERALL HEAT BALANCE, (H(IN) - H(OUT)) -1.1021E-03

PUMPAROUNDS

TRAY FROM	TRAY TO	TEMP, DEG C FROM	TEMP, DEG C TO	LIQUID FRACTION FROM	LIQUID FRACTION TO	RATES KG-MOL/HR	RATES K*KG/HR	RATES STD M3/HR
11	10	176.8	119.0	1.0000	1.0000	2075.42	284.309	363.86
18	17	247.9	158.0	1.0000	1.0000	302.67	60.289	72.69
24	23	302.5	217.0	1.0000	1.0000	241.18	67.812	77.53

SPECIFICATIONS

PARAMETER TYPE	TRAY NO	COMP NO	SPECIFICATION TYPE	SPECIFIED VALUE	CALCULATED VALUE
STRM 9	1		D86 EP	1.480E+02	1.480E+02
STRM 10	32		D86 10 PCT	1.500E+02	1.500E+02
STRM 11	36		D86 10 PCT	2.050E+02	2.050E+02
STRM 12	40		D86 10 PCT	2.770E+02	2.770E+02
STRM 21	1		WT RATE	1.262E+03	1.262E+03
STRM 10	32		D86 95 PCT	1.910E+02	1.910E+02
STRM 11	36		D86 95 PCT	2.750E+02	2.750E+02
STRM 12	40		D86 90 PCT	3.580E+02	3.580E+02

REFLUX RATIOS

	REFLUX RATIOS MOLAR	WEIGHT	STD L VOL
REFLUX / FEED STREAM 1A	0.4238	0.1657	0.2045
REFLUX / VAPOR DISTILLATE	33.2252	49.3379	41.1002
REFLUX / LIQUID DISTILLATE	1.2286	1.2286	1.2286
REFLUX / TOTAL DISTILLATE	1.1848	1.1979	1.1924

TABLE F.2 - PLOCK CRUDE UNIT SIMULATION - continued

```
SIMULATION SCIENCES INC.                    R                                PAGE P-5
PROJECT  PLOCK_5                     PRO/II  VERSION 3.02                     386/EM
PROBLEM  CRUDE TOWER                        OUTPUT                              LME
                                       COLUMN SUMMARY                       09/17/91
==============================================================================
```

UNIT 2, 'COL1', 'CRUDE TOWER'

TOTAL NUMBER OF ITERATIONS

IN/OUT METHOD 5

COLUMN SUMMARY

TRAY	TEMP DEG C	PRESSURE KPA	NET FLOW RATES LIQUID KG-MOL/HR	VAPOR	FEED	PRODUCT	HEATER DUTIES M*KCAL/HR
1	48.3	180.00	803.3			22.9V 625.2L 334.6W	-17.6597
2	116.6	216.00	836.4	1786.0			
3	134.5	216.36	844.9	1819.1			
4	141.2	216.71	833.0	1827.5			
5	145.1	217.07	817.8	1815.7			
6	148.1	217.43	800.5	1800.4			
7	150.8	217.79	780.2	1783.2			
8	153.7	218.14	755.3	1762.9			
9	157.1	218.50	724.6	1737.9			
10	161.4	218.86	373.3	1707.2	169.7V	314.1L	
11	167.7	219.21	1834.3	1500.4			-5.040C
12	177.0	219.57	799.8	1896.3			
13	184.5	219.93	777.4	1926.8			
14	189.3	220.29	748.3	1904.4			
15	193.5	220.64	710.8	1875.3			
16	198.0	221.00	657.3	1837.9			
17	204.1	221.36	580.6	1784.4			
18	213.0	221.71	161.2	1707.7	140.5V	327.6L	
19	225.9	222.07	1090.4	1475.5			-6.3800
20	242.2	222.43	485.7	1784.1			
21	254.0	222.79	460.1	1799.9			
22	260.1	223.14	429.0	1774.3			
23	264.5	223.50	389.8	1743.3			
24	269.1	223.86	332.7	1704.0			
25	275.4	224.21	28.9	1646.9	57.0V	219.0L	
26	285.6	224.57	441.1	1505.1			-4.5000
27	301.3	224.93	122.9	1627.6			
28	312.0	225.29	86.7	1599.1			
29	317.1	225.64	32.6	1562.9	1247.3V		
30	321.7	226.00	528.8	261.5	545.3L		
31	320.8	227.20		212.3	170.4V	486.8L	
SIDESTRIPPER SS01							
1/ 32	152.6	220.00	287.7		314.1L	169.7V	
2/ 33	147.6	220.00	275.1	143.3			
3/ 34	143.9	220.00	266.0	130.7			
4/ 35	141.3	220.00		121.6	85.5V	229.9L	

245

TABLE F.2 - PLOCK CRUDE UNIT SIMULATION - continued

```
SIMULATION SCIENCES INC.                    R                                PAGE P-6
PROJECT  PLOCK_S                      PRO/II  VERSION 3.02                    386/EM
PROBLEM  CRUDE TOWER                          OUTPUT                            LME
                                        COLUMN SUMMARY                      09/17/91
==============================================================================
```

UNIT 2, 'COL1', 'CRUDE TOWER' (CONT)

SIDESTRIPPER SS02

TRAY	TEMP DEG C	PRESSURE KPA	NET FLOW RATES LIQUID KG-MOL/HR	VAPOR KG-MOL/HR	FEED KG-MOL/HR	PRODUCT KG-MOL/HR	HEATER DUTIES M*KCAL/HR
1/ 36	207.7	222.00	304.2		327.6L	140.5V	
2/ 37	204.5	222.00	292.6	117.0			
3/ 38	201.6	222.00	282.8	105.5			
4/ 39	198.2	222.00		95.6	67.2V	254.3L	

SIDESTRIPPER SS03

1/ 40	273.4	225.00	209.3		219.0L	57.0V	
2/ 41	272.2	225.00	204.7	47.3			
3/ 42	271.0	225.00	200.4	42.7			
4/ 43	268.7	225.00		38.4	26.4V	188.3L	

FEED AND PRODUCT STREAMS

TYPE	STREAM	PHASE	FROM TRAY	TO TRAY	LIQUID FRACTION	FLOW RATES KG-MOL/HR	HEAT RATES M*KCAL/HR
FEED	14	VAPOR		10	0.0000	169.75	2.3502
FEED	16	VAPOR		18	0.0000	140.47	2.5100
FEED	18	VAPOR		25	0.0000	56.99	1.3837
FEED	1A	MIXED		30	0.3042	1792.66	76.7237
FEED	2	VAPOR		31	0.0000	170.36	2.5405
PRODUCT	21	VAPOR	1			22.88	0.1500
PRODUCT	9	LIQUID	1			625.19	0.6852
PRODUCT	7	WATER	1			334.61	0.2906
PRODUCT	15	LIQUID	10			314.13	2.7948
PRODUCT	17	LIQUID	18			327.64	5.6254
PRODUCT	19	LIQUID	25			218.97	7.3622
PRODUCT	20	LIQUID	31			486.82	35.0196
SIDESTRIPPER SS01							
FEED	15	LIQUID		32	1.0000	314.13	2.7948
FEED	5	VAPOR		35	0.0000	85.48	1.2748
PRODUCT	14	VAPOR	32			169.75	2.3502
PRODUCT	10	LIQUID	35			229.86	1.7195
SIDESTRIPPER SS02							
FEED	17	LIQUID		36	1.0000	327.64	5.6254
FEED	4	VAPOR		39	0.0000	67.17	1.0016
PRODUCT	16	VAPOR	36			140.47	2.5100
PRODUCT	11	LIQUID	39			254.33	4.1170

TABLE F.2 - PLOCK CRUDE UNIT SIMULATION - continued

```
SIMULATION SCIENCES INC.                    R                                PAGE P-7
PROJECT  PLOCK_5                     PRO/II  VERSION 3.02                     386/EM
PROBLEM  CRUDE TOWER                          OUTPUT                             LME
                                        COLUMN SUMMARY                      09/17/91
==============================================================================
```

UNIT 2, 'COL1', 'CRUDE TOWER' (CONT)

SIDESTRIPPER SS03

TYPE	STREAM	PHASE	FROM TRAY	TO TRAY	LIQUID FRACTION	FLOW RATES KG-MOL/HR	HEAT RATES M*KCAL/HR
FEED	19	LIQUID		40	1.0000	218.97	7.3622
FEED	3	VAPOR		43	0.0000	26.37	0.3932
PRODUCT	18	VAPOR	40			56.99	1.3837
PRODUCT	12	LIQUID	43			188.34	6.3717

OVERALL MASS BALANCE, (FEEDS - PRODUCTS) -2.6822E-05
OVERALL HEAT BALANCE, (H(IN) - H(OUT)) 3.3579E-04

PUMPAROUNDS

TRAY FROM	TRAY TO	TEMP, DEG C FROM	TEMP, DEG C TO	LIQUID FRACTION FROM	LIQUID FRACTION TO	RATES KG-MOL/HR	RATES K*KG/HR	RATES STD M3/HR
12	11	177.0	119.0	1.0000	1.0000	1055.03	146.243	187.11
20	19	242.2	158.0	1.0000	1.0000	620.45	121.621	146.96
27	26	301.3	217.0	1.0000	1.0000	289.71	81.254	92.93

SPECIFICATIONS

PARAMETER TYPE	TRAY NO	COMP NO	SPECIFICATION TYPE	SPECIFIED VALUE	CALCULATED VALUE
STRM 9	1		D86 EP	1.480E+02	1.480E+02
STRM 21	1		WT RATE	1.262E+03	1.262E+03
STRM 10	35		D86 95 PCT	1.910E+02	1.910E+02
STRM 11	39		D86 95 PCT	2.750E+02	2.750E+02
STRM 12	43		D86 90 PCT	3.580E+02	3.580E+02

REFLUX RATIOS

	REFLUX RATIOS MOLAR	WEIGHT	STD L VOL
REFLUX / FEED STREAM 1A	0.4481	0.1759	0.2168
REFLUX / VAPOR DISTILLATE	35.1151	52.3094	43.5371
REFLUX / LIQUID DISTILLATE	1.2850	1.2850	1.2850
REFLUX / TOTAL DISTILLATE	1.2396	1.2533	1.2476

TABLE F.2 - PLOCK CRUDE UNIT SIMULATION - continued

```
SIMULATION SCIENCES INC.                    R                                PAGE P-5
PROJECT   PLOCK_6                    PRO/II  VERSION 3.02                     386/EM
PROBLEM   CRUDE TOWER                          OUTPUT                            LME
                                          COLUMN SUMMARY                     09/17/91
==============================================================================
```

UNIT 2, 'COL1', 'CRUDE TOWER'

TOTAL NUMBER OF ITERATIONS

IN/OUT METHOD 5

COLUMN SUMMARY

TRAY	TEMP DEG C	PRESSURE KPA	NET FLOW RATES KG-MOL/HR LIQUID	VAPOR	FEED	PRODUCT	HEATER DUTIES M*KCAL/HR
1	46.5	180.00	440.1			22.8V 590.3L 334.1W	-13.4671
2	111.4	216.00	440.0	1387.4			
3	126.1	216.36	436.1	1387.3			
4	131.2	216.71	426.2	1383.3			
5	134.1	217.07	416.4	1373.5			
6	136.2	217.43	406.2	1363.7			
7	138.2	217.79	394.6	1353.5			
8	140.3	218.14	380.2	1341.9			
9	142.9	218.50	361.7	1327.5			
10	146.3	218.86	5.0	1309.0	161.4V	333.4L	
11	151.8	219.21	2468.9	1124.1			-7.1482
12	165.0	219.57	600.2	1614.6			
13	178.3	219.93	586.5	1719.3			
14	184.3	220.29	562.7	1705.7			
15	188.5	220.64	532.1	1681.9			
16	192.8	221.00	489.3	1651.3			
17	198.3	221.36	428.6	1608.5			
18	206.1	221.71	22.3	1547.7	137.3V	332.9L	
19	217.7	222.07	1331.1	1337.0			-8.6417
20	237.4	222.43	479.2	1742.0			
21	252.9	222.79	458.5	1794.0			
22	259.7	223.14	428.0	1773.2			
23	264.4	223.50	388.8	1742.8			
24	269.1	223.86	331.7	1703.6			
25	275.4	224.21	29.1	1646.5	56.9V	218.3L	
26	285.6	224.57	441.5	1505.3			-4.5000
27	301.3	224.93	123.2	1627.8			
28	311.9	225.29	87.0	1599.3			
29	317.0	225.64	32.7	1563.1	1247.3V		
30	321.7	226.00	528.9	261.5	545.3L		
31	320.8	227.20		212.3	170.4V	486.9L	

SIDESTRIPPER SS01

1/ 32	139.8	220.00	311.7		333.4L	161.4V	
2/ 33	136.0	220.00	300.8	139.8			
3/ 34	133.2	220.00	292.6	128.9			
4/ 35	132.0	220.00		120.7	85.5V	257.4L	

TABLE F.2 - PLOCK CRUDE UNIT SIMULATION - continued

```
SIMULATION SCIENCES INC.                    R                                PAGE P-6
PROJECT  PLOCK_6                    PRO/II  VERSION 3.02                      386/EM
PROBLEM  CRUDE TOWER                          OUTPUT                            LME
                                        COLUMN SUMMARY                      09/17/91
==============================================================================
```

UNIT 2, 'COL1', 'CRUDE TOWER' (CONT)

SIDESTRIPPER SS02

TRAY	TEMP DEG C	PRESSURE KPA	NET FLOW RATES LIQUID KG-MOL/HR	VAPOR	FEED	PRODUCT	HEATER DUTIES M*KCAL/HR
1/ 36	201.3	222.00	310.6		332.9L	137.3V	
2/ 37	198.4	222.00	299.5	115.0			
3/ 38	195.7	222.00	290.1	103.9			
4/ 39	193.0	222.00		94.5	67.2V	262.8L	

SIDESTRIPPER SS03

1/ 40	273.4	225.00	208.6		218.3L	56.9V	
2/ 41	272.2	225.00	204.0	47.3			
3/ 42	271.0	225.00	199.7	42.6			
4/ 43	268.7	225.00		38.4	26.4V	187.7L	

FEED AND PRODUCT STREAMS

TYPE	STREAM	PHASE	FROM TRAY	TO TRAY	LIQUID FRACTION	FLOW RATES KG-MOL/HR	HEAT RATES M*KCAL/HR
FEED	14	VAPOR		10	0.0000	161.44	2.0830
FEED	16	VAPOR		18	0.0000	137.29	2.3451
FEED	18	VAPOR		25	0.0000	56.94	1.3821
FEED	1A	MIXED		30	0.3042	1792.66	76.7237
FEED	2	VAPOR		31	0.0000	170.36	2.5405
PRODUCT	21	VAPOR	1			22.85	0.1478
PRODUCT	9	LIQUID	1			590.27	0.6109
PRODUCT	7	WATER	1			334.15	0.2796
PRODUCT	15	LIQUID	10			333.35	2.5131
PRODUCT	17	LIQUID	18			332.88	5.4101
PRODUCT	19	LIQUID	25			218.29	7.3406
PRODUCT	20	LIQUID	31			486.90	35.0239
SIDESTRIPPER SS01							
FEED	15	LIQUID		32	1.0000	333.35	2.5131
FEED	5	VAPOR		35	0.0000	85.48	1.2748
PRODUCT	14	VAPOR	32			161.44	2.0830
PRODUCT	10	LIQUID	35			257.40	1.7049
SIDESTRIPPER SS02							
FEED	17	LIQUID		36	1.0000	332.88	5.4101
FEED	4	VAPOR		39	0.0000	67.17	1.0016
PRODUCT	16	VAPOR	36			137.29	2.3451
PRODUCT	11	LIQUID	39			262.76	4.0667

TABLE F.2 - PLOCK CRUDE UNIT SIMULATION - continued

```
SIMULATION SCIENCES INC.                    R                                  PAGE P-7
PROJECT  PLOCK_6                     PRO/II  VERSION 3.02                       386/EM
PROBLEM  CRUDE TOWER                          OUTPUT                             LME
                                        COLUMN SUMMARY                        09/17/91
==============================================================================
```

UNIT 2, 'COL1', 'CRUDE TOWER' (CONT)

SIDESTRIPPER SS03

TYPE	STREAM	PHASE	FROM TRAY	TO TRAY	LIQUID FRACTION	FLOW RATES KG-MOL/HR	HEAT RATES M*KCAL/HR
FEED	19	LIQUID		40	1.0000	218.29	7.3406
FEED	3	VAPOR		43	0.0000	26.37	0.3932
PRODUCT	18	VAPOR	40			56.94	1.3821
PRODUCT	12	LIQUID	43			187.71	6.3517

OVERALL MASS BALANCE, (FEEDS - PRODUCTS) -1.4752E-04
OVERALL HEAT BALANCE, (H(IN) - H(OUT)) -8.5980E-03

PUMPAROUNDS

TRAY FROM	TRAY TO	TEMP, DEG C FROM	TEMP, DEG C TO	LIQUID FRACTION FROM	LIQUID FRACTION TO	RATES KG-MOL/HR	RATES K*KG/HR	RATES STD M3/HR
12	11	165.0	119.0	1.0000	1.0000	1973.51	263.516	338.67
20	19	237.4	158.0	1.0000	1.0000	903.90	175.279	212.15
27	26	301.3	217.0	1.0000	1.0000	289.88	81.281	92.97

SPECIFICATIONS

PARAMETER TYPE	TRAY NO	COMP NO	SPECIFICATION TYPE	SPECIFIED VALUE	CALCULATED VALUE
STRM 9	1		D86 EP	1.480E+02	1.480E+02
STRM 10	35		TEMPERATURE	1.320E+02	1.320E+02
STRM 11	39		TEMPERATURE	1.930E+02	1.930E+02
STRM 21	1		WT RATE	1.262E+03	1.262E+03
STRM 10	35		D86 95 PCT	1.910E+02	1.910E+02
STRM 11	39		D86 95 PCT	2.750E+02	2.750E+02
STRM 12	43		D86 90 PCT	3.580E+02	3.580E+02

REFLUX RATIOS

	REFLUX RATIOS MOLAR	WEIGHT	STD L VOL
REFLUX / FEED STREAM 1A	0.2455	0.0949	0.1176
REFLUX / VAPOR DISTILLATE	19.2605	28.3971	23.7039
REFLUX / LIQUID DISTILLATE	0.7456	0.7456	0.7456
REFLUX / TOTAL DISTILLATE	0.7178	0.7260	0.7226

TABLE F.2 - PLOCK CRUDE UNIT SIMULATION - continued

```
SIMULATION SCIENCES INC.                    R                                PAGE P-5
PROJECT   PLOCK_7                    PRO/II  VERSION 3.02                     386/EM
PROBLEM   CRUDE TOWER                        OUTPUT                             LME
                                          COLUMN SUMMARY                     09/17/91
==============================================================================
```

UNIT 2, 'COL1', 'CRUDE TOWER'

TOTAL NUMBER OF ITERATIONS

IN/OUT METHOD 3

COLUMN SUMMARY

TRAY	TEMP DEG C	PRESSURE KPA	NET FLOW RATES LIQUID KG-MOL/HR	VAPOR	FEED	PRODUCT	HEATER DUTIES M*KCAL/HR
1	48.0	180.00	728.0			22.9V 620.4L 334.7W	-16.8201
2	115.8	216.00	753.5	1706.0			
3	133.2	216.36	758.8	1731.5			
4	139.7	216.71	747.0	1736.7			
5	143.4	217.07	732.5	1724.9			
6	146.3	217.43	716.5	1710.5			
7	148.9	217.79	697.6	1694.4			
8	151.7	218.14	674.4	1675.5			
9	155.0	218.50	645.9	1652.4			
10	159.2	218.86	283.8	1623.8	169.5V	327.7L	
11	165.4	219.21	2639.2	1419.9			-8.2327
12	177.3	219.57	1001.8	2042.2			
13	187.3	219.93	983.3	2137.9			
14	193.1	220.29	950.3	2119.5			
15	197.9	220.64	905.2	2086.4			
16	203.0	221.00	839.9	2041.3			
17	209.8	221.36	747.7	1976.0			
18	219.4	221.71	308.8	1883.8	144.8V	331.8L	
19	233.1	222.07	1210.5	1632.0			-5.5308
20	248.9	222.43	643.4	1954.1			
21	260.3	222.79	613.9	1966.6			
22	266.9	223.14	576.6	1937.1			
23	272.0	223.50	527.8	1899.8			
24	277.3	223.86	456.2	1850.9			
25	284.6	224.21	142.4	1779.3	57.7V	209.9L	
26	296.1	224.57	261.1	1617.7			-1.7025
27	306.4	224.93	121.2	1535.0			
28	312.9	225.29	87.4	1596.6			
29	317.2	225.64	33.6	1582.8	1247.3V		
30	321.7	226.00	529.7	261.6	545.3L		
31	320.7	227.20		212.4	170.4V	487.7L	

SIDESTRIPPER SS01

1/ 32	151.0	220.00	301.9		327.7L	169.5V
2/ 33	146.4	220.00	289.3	143.7		
3/ 34	142.8	220.00	280.1	131.2		
4/ 35	140.3	220.00		121.9	85.5V	243.7L

TABLE F.2 - PLOCK CRUDE UNIT SIMULATION - continued

```
SIMULATION SCIENCES INC.                    R                                PAGE P-6
PROJECT   PLOCK_7                     PRO/II  VERSION 3.02                     386/EP
PROBLEM   CRUDE TOWER                        OUTPUT                              LME
                                          COLUMN SUMMARY                     09/17/91
==============================================================================
```

UNIT 2, 'COL1', 'CRUDE TOWER' (CONT)

SIDESTRIPPER SS02

TRAY	TEMP DEG C	PRESSURE KPA	NET FLOW RATES LIQUID	VAPOR	FEED	PRODUCT	HEATER DUTIES M*KCAL/HR
			KG-MOL/HR				
1/ 36	213.8	222.00	307.0		331.8L	144.8V	
2/ 37	210.4	222.00	294.7	119.9			
3/ 38	207.2	222.00	284.0	107.6			
4/ 39	203.2	222.00		97.0	67.2V	254.2L	

SIDESTRIPPER SS03

1/ 40	282.4	225.00	200.1		209.9L	57.7V	
2/ 41	281.2	225.00	195.5	47.9			
3/ 42	279.8	225.00	191.2	43.3			
4/ 43	277.1	225.00		39.0	26.4V	178.6L	

FEED AND PRODUCT STREAMS

TYPE	STREAM	PHASE	FROM TRAY	TO TRAY	LIQUID FRACTION	FLOW RATES KG-MOL/HR	HEAT RATES M*KCAL/HR
FEED	14	VAPOR		10	0.0000	169.51	2.3249
FEED	16	VAPOR		18	0.0000	144.75	2.7046
FEED	18	VAPOR		25	0.0000	57.87	1.4982
FEED	1A	MIXED		30	0.3042	1792.66	76.7237
FEED	2	VAPOR		31	0.0000	170.36	2.5405
PRODUCT	21	VAPOR	1			22.87	0.1497
PRODUCT	9	LIQUID	1			620.40	0.8746
PRODUCT	7	WATER	1			334.67	0.2893
PRODUCT	15	LIQUID	10			327.68	2.8511
PRODUCT	17	LIQUID	18			331.80	6.0010
PRODUCT	19	LIQUID	25			209.86	7.4734
PRODUCT	20	LIQUID	31			487.67	35.0656
SIDESTRIPPER SS01							
FEED	15	LIQUID		32	1.0000	327.68	2.8511
FEED	5	VAPOR		35	0.0000	85.48	1.2748
PRODUCT	14	VAPOR	32			169.51	2.3249
PRODUCT	10	LIQUID	35			243.85	1.8009
SIDESTRIPPER SS02							
FEED	17	LIQUID		36	1.0000	331.80	6.0010
FEED	4	VAPOR		39	0.0000	67.17	1.0016
PRODUCT	16	VAPOR	36			144.75	2.7048
PRODUCT	11	LIQUID	39			254.21	4.2978

TABLE F.2 - PLOCK CRUDE UNIT SIMULATION - continued

```
SIMULATION SCIENCES INC.                    R                                PAGE P-7
PROJECT  PLOCK_7                      PRO/II  VERSION 3.02                     386/EM
PROBLEM  CRUDE TOWER                          OUTPUT                            LME
                                        COLUMN SUMMARY                      09/17/91
==============================================================================
```

UNIT 2, 'COL1', 'CRUDE TOWER' (CONT)

SIDESTRIPPER SS03

TYPE	STREAM	PHASE	FROM TRAY	TO TRAY	LIQUID FRACTION	FLOW RATES KG-MOL/HR	HEAT RATES M*KCAL/HR
FEED	19	LIQUID		40	1.0000	209.86	7.4734
FEED	3	VAPOR		43	0.0000	26.37	0.3932
PRODUCT	18	VAPOR	40			57.67	1.4982
PRODUCT	12	LIQUID	43			178.56	6.3685

OVERALL MASS BALANCE, (FEEDS - PRODUCTS) -9.7230E-05
OVERALL HEAT BALANCE, (H(IN) - H(OUT)) 1.2511E-03

PUMPAROUNDS

TRAY FROM	TRAY TO	TEMP, DEG C FROM	TEMP, DEG C TO	LIQUID FRACTION FROM	LIQUID FRACTION TO	RATES KG-MOL/HR	RATES K*KG/HR	RATES STD M3/HR
12	11	177.3	119.0	1.0000	1.0000	1733.10	237.555	304.02
20	19	248.9	158.0	1.0000	1.0000	579.59	114.885	138.63
27	26	306.4	217.0	1.0000	1.0000	101.45	28.933	33.01

SPECIFICATIONS

PARAMETER TYPE	TRAY NO	COMP NO	SPECIFICATION TYPE	SPECIFIED VALUE	CALCULATED VALUE
STRM 9	1		D86 EP	1.480E+02	1.480E+02
STRM 10	35		D86 10 PCT	1.500E+02	1.500E+02
STRM 11	39		D86 10 PCT	2.050E+02	2.050E+02
STRM 12	43		D86 10 PCT	2.780E+02	2.780E+02
STRM 21	1		WT RATE	1.262E+03	1.262E+03
STRM 10	35		D86 95 PCT	1.910E+02	1.910E+02
STRM 11	39		D86 95 PCT	2.750E+02	2.750E+02
STRM 12	43		D86 90 PCT	3.580E+02	3.580E+02

REFLUX RATIOS

	REFLUX RATIOS MOLAR	WEIGHT	STD L VOL
REFLUX / FEED STREAM 1A	0.4061	0.1591	0.1962
REFLUX / VAPOR DISTILLATE	31.8284	47.3468	39.4221
REFLUX / LIQUID DISTILLATE	1.1735	1.1735	1.1735
REFLUX / TOTAL DISTILLATE	1.1318	1.1443	1.1391

TABLE F.2 - PLOCK CRUDE UNIT SIMULATION - continued

```
SIMULATION SCIENCES INC.                    R                                PAGE P-5
PROJECT  PLOCK_8                      PRO/II  VERSION 3.02                     386/EM
PROBLEM  CRUDE TOWER                        OUTPUT                              LME
                                         COLUMN SUMMARY                     09/16/91
==============================================================================
```

UNIT 2, 'COL1', 'CRUDE TOWER'

TOTAL NUMBER OF ITERATIONS

IN/OUT METHOD 5

COLUMN SUMMARY

TRAY	TEMP DEG C	PRESSURE KPA	NET FLOW RATES LIQUID	VAPOR	FEED	PRODUCT	HEATER DUTIES M*KCAL/HR
			KG-MOL/HR				
1	46.8	180.00	504.7			22.8V 597.1L 410.1W	-14.9165
2	110.4	216.00	502.8	1534.7			
3	125.7	216.40	498.4	1532.9			
4	131.3	216.80	486.2	1528.5			
5	134.6	217.20	473.1	1516.3			
6	137.2	217.60	458.6	1503.2			
7	139.8	218.00	441.2	1488.7			
8	142.8	218.40	419.3	1471.2			
9	146.6	218.80	47.7	1449.3	197.9V	343.7L	
10	152.9	219.20	2732.4	1223.6			-8.0560
11	166.5	219.60	720.8	1770.7			
12	180.2	220.00	702.2	1896.7			
13	187.0	220.40	665.6	1878.1			
14	192.7	220.80	612.9	1841.5			
15	199.2	221.20	538.0	1788.8			
16	208.3	221.60	105.4	1713.9	171.6V	341.8L	
17	221.7	222.00	1225.1	1451.4			-7.5495
18	239.7	222.40	492.6	1810.6			
19	253.7	222.80	461.4	1838.6			
20	261.0	223.20	416.5	1807.4			
21	266.9	223.60	353.0	1762.5			
22	274.1	224.00	30.3	1699.0	101.4V	231.3L	
23	285.4	224.40	443.3	1506.2			-4.5000
24	301.2	224.80	124.0	1628.6			
25	311.9	225.20	87.6	1599.9			
26	317.0	225.60	33.0	1563.5	1247.3V		
27	321.7	226.00	529.1	261.6	545.3L		
28	320.7	227.20		212.3	170.4V	487.1L	
SIDESTRIPPER SS01							
1/ 29	139.2	220.00	318.9		343.7L	197.9V	
2/ 30	135.1	220.00	307.1	173.1			
3/ 31	132.5	220.00	299.0	161.3			
4/ 32	132.0	220.00		153.1	111.0V	256.9L	

TABLE F.2 - PLOCK CRUDE UNIT SIMULATION - continued

```
SIMULATION SCIENCES INC.                    R                                PAGE P-6
PROJECT   PLOCK_8                   PRO/II  VERSION 3.02                      386/EM
PROBLEM   CRUDE TOWER                       OUTPUT                             LME
                                         COLUMN SUMMARY                     09/16/91
==============================================================================
```

UNIT 2, 'COL1', 'CRUDE TOWER' (CONT)

SIDESTRIPPER SS02

TRAY	TEMP DEG C	PRESSURE KPA	NET FLOW RATES LIQUID	VAPOR	FEED	PRODUCT	HEATER DUTIES M*KCAL/HR
			KG-MOL/HR				
1/ 33	202.3	222.00	314.9		341.8L	171.6V	
2/ 34	198.8	222.00	302.0	144.8			
3/ 35	195.7	222.00	291.5	131.9			
4/ 36	193.0	222.00		121.4	88.8V	258.9L	

SIDESTRIPPER SS03

1/ 37	270.8	225.00	216.0		231.3L	101.4V	
2/ 38	269.0	225.00	209.3	86.1			
3/ 39	267.1	225.00	203.5	79.4			
4/ 40	264.4	225.00		73.5	55.5V	185.4L	

FEED AND PRODUCT STREAMS

TYPE	STREAM	PHASE	FROM TRAY	TO TRAY	LIQUID FRACTION	FLOW RATES KG-MOL/HR	HEAT RATES M*KCAL/HR
FEED	14	VAPOR		9	0.0000	197.89	2.5514
FEED	16	VAPOR		16	0.0000	171.64	2.9408
FEED	18	VAPOR		22	0.0000	101.42	2.3375
FEED	1A	MIXED		27	0.3042	1792.66	76.7237
FEED	2	VAPOR		28	0.0000	170.36	2.5405
PRODUCT	21	VAPOR	1			22.85	0.1482
PRODUCT	9	LIQUID	1			597.07	0.6244
PRODUCT	7	WATER	1			410.13	0.3457
PRODUCT	15	LIQUID	9			343.72	2.6027
PRODUCT	17	LIQUID	16			341.76	5.6359
PRODUCT	19	LIQUID	22			231.34	7.6839
PRODUCT	20	LIQUID	28			487.10	35.0336

SIDESTRIPPER SS01

FEED	15	LIQUID		29	1.0000	343.72	2.6027
FEED	5	VAPOR		32	0.0000	111.02	1.6556
PRODUCT	14	VAPOR	29			197.89	2.5514
PRODUCT	10	LIQUID	32			256.85	1.7069

SIDESTRIPPER SS02

FEED	17	LIQUID		33	1.0000	341.76	5.6359
FEED	4	VAPOR		36	0.0000	88.81	1.3245
PRODUCT	16	VAPOR	33			171.64	2.9408
PRODUCT	11	LIQUID	36			258.93	4.0194

TABLE F.2 - PLOCK CRUDE UNIT SIMULATION - continued

```
SIMULATION SCIENCES INC.                    R                                  PAGE P-7
PROJECT  PLOCK_8                      PRO/II  VERSION 3.02                      386/EM
PROBLEM  CRUDE TOWER                          OUTPUT                             LME
                                        COLUMN SUMMARY                        09/16/91
==============================================================================
```

UNIT 2, 'COL1', 'CRUDE TOWER' (CONT)

SIDESTRIPPER SS03

TYPE	STREAM	PHASE	FROM TRAY	TO TRAY	LIQUID FRACTION	FLOW RATES KG-MOL/HR	HEAT RATES M*KCAL/HR
FEED	19	LIQUID		37	1.0000	231.34	7.6839
FEED	3	VAPOR		40	0.0000	55.51	0.8278
PRODUCT	18	VAPOR	37			101.42	2.3375
PRODUCT	12	LIQUID	40			185.43	6.1742

OVERALL MASS BALANCE, (FEEDS - PRODUCTS) 6.7055E-05
OVERALL HEAT BALANCE, (H(IN) - H(OUT)) -1.7643E-03

PUMPAROUNDS

TRAY FROM	TRAY TO	TEMP, DEG C FROM	TEMP, DEG C TO	LIQUID FRACTION FROM	LIQUID FRACTION TO	RATES KG-MOL/HR	RATES K*KG/HR	RATES STD M3/HR
11	10	166.5	119.0	1.0000	1.0000	2137.55	286.982	368.47
18	17	239.7	158.0	1.0000	1.0000	760.49	148.566	179.62
24	23	301.2	217.0	1.0000	1.0000	290.62	81.421	93.14

SPECIFICATIONS

PARAMETER TYPE	TRAY NO	COMP NO	SPECIFICATION TYPE	SPECIFIED VALUE	CALCULATED VALUE
STRM 9	1		D86 EP	1.480E+02	1.480E+02
STRM 10	32		TEMPERATURE	1.320E+02	1.320E+02
STRM 11	36		TEMPERATURE	1.930E+02	1.930E+02
STRM 21	1		WT RATE	1.262E+03	1.262E+03
STRM 10	32		D86 95 PCT	1.910E+02	1.910E+02
STRM 11	36		D86 95 PCT	2.750E+02	2.750E+02
STRM 12	40		D86 90 PCT	3.580E+02	3.580E+02

REFLUX RATIOS

	REFLUX RATIOS MOLAR	WEIGHT	STD L VOL
REFLUX / FEED STREAM 1A	0.2815	0.1091	0.1350
REFLUX / VAPOR DISTILLATE	22.0880	32.5907	27.1985
REFLUX / LIQUID DISTILLATE	0.8453	0.8453	0.8453
REFLUX / TOTAL DISTILLATE	0.8141	0.8234	0.8195

256

ABBREVIATIONS

°API	deg API (gravity of oil fractions, defined by API)
°C	degree Celsius
°F	degree Fahrenheit
%	per cent
/	per (e.g., tonnes/day)
A	ampere
ACFM	actual cubic feet per minute
AFBC	Atmospheric Fluidized Bed Combustion
API	American Petroleum Institute
ASTM	American Society of Testing Materials
BACT	best available control technology
BFW	boiler feed water
BOD	biological oxygen demand
BPCD	barrels per calendar day
BPSD	barrels per stream day
BS&W	Basic, Sediment and Water
BTX	benzene toluene xylene
Btu	British thermal units
C.F.	characterization factor
CCR	continuous catalyst regeneration
COD	chemical oxygen demand
CV	calorific value (heat of combustion)
DCS	distributed control system
DEA	Diethanolamine
EP	end point
EPA	Environmental Protection Agency (U.S.)
FBP	final boiling point
FCC	fluid catalytic cracking
FGD	flue gas desulfurization
FOE	fuel oil equivalent
G	giga(10^9)
GCV	gross calorific value
GJ	giga joules
HC	hydrocarbons
HDS	hydrodesulfurization
HP	high pressure
Hg	mercury
Hz	hertz
IBP	initial boiling point
IGT	Institute of Gas Technology
ISBL	inside battery limit

J	joule
KRW	Kellogg Rust Westinghouse
LHSV	Liquid Hourly Space Velocity
LP	linear programming/low pressure
Lube	Lubricating
M	mega(10^6)
MEA	Monoethanolamine
MEK	methyl ethyl ketone
MHC	mild hydrocracking
MON	motor octane number
MPa	Megapascal, a unit of pressure
MSW	municipal solid waste
MTBE	methyl tertiary butyl ether
MVA	mega volts ampere
MVAR	mega voltampere reactive
MW	mega watts
NAAQS	National Ambient Air Quality Standards
NCV	net calorific value
NO_x	Oxides of Nitrogen
NPDES	National Pollutant Discharge Elimination System
OSBL	outside battery limit
OVA	Organic Vapor Analyzer
PFBC	Pressurized Fluidized Bed Combustion
PONA	Paraffins, Olefins, Naphthanes and Aromatics
Pa	pascal, a unit of pressure
RCC	reduced crude conversion
RON	research octane number
RTD	Resistance Temperature Detector
RVP	Reid Vapor Pressure
S.R.	Straight Run
SCFD	standard cubic feet per day
SCFH	standard cubic feet per hour
SCFM	standard cubic feet per minute
SG	specific gravity
SO_x	Oxides of sulfur
SRC	solvent refined coal
T	tera (10^{12})
TBP	true boiling point
TDS	total dissolved solids
TEFC	totally enclosed fan cooled
TEL	tetraethyl lead
TOC	total organic carbon
TSS	Total Suspended Solids
UOP K	UOP Characterization Factor
V	volt
VOC	volatile organic compound

WWTP	wastewater treatment plant
WATSON K	Watson Characterization Factor
XP	explosion proof
atm	atmosphere or atmospheres
bar	bar
cP	centipoise
cSt	centistokes
cal	calorie
cm	centimeters
cps	cycles per second
day	day
ft^3	cubic feet
ft	feet or foot
g	gram
gal	gallons
gpm	gallons per minute
h	hour
hp	horse power
in	inch or inches
k	kilo
kA	kiloamperes
kPa	kilo pascal, a unit of pressure
kV	kilovolts
kWh	kilowatt hour
kcal	kilo calories
kcal	kilo calories
kg	kilogram
kg/cm^2	kilogram per square centimeter
lb	pound or pounds
liter	liter or litre
m	meter or metre
max.	maximum
mg	milligram
mi	mile
million	million(10^6)
min	minute
min.	minimum
mm	millimeters
mol	mole
n	normal
ohm	ohm
pH	pH, a measure of acidity or strength of a base.
percent	percent(or %)
phase	phase (electrical)
ppm	parts per million
ppmv	parts per million (volume)

ppmw	parts per million (weight)
ppb	parts per billion
psi	pounds per square inch
psia	pounds per square inch absolute
psig	pounds per square inch gauge
ptb	pounds per thousand barrels of oil
rpm	revolutions per minute
sec	seconds
tonne	metric ton
tonnes	metric tons
vol	volume
wt	weight
y	year