PN-ABN-593

EVALUATION AUDIT REPORT
ROMANIAN PETROLEUM REFINERY
PETROTEL, PLOIESTI

A SELECTIVE REFINERY ANALYSIS FOR: OPERATION, ENERGY USE, ENVIRONMENTAL IMPACTS AND IMPROVEMENT OPPORTUNITIES

MAY, 1992

PREPARED BY: DAVY MCKEE CORPORATION, CHICAGO, IL USA

US. EMERGENCY ENERGY PROGRAM FOR EASTERN EUROPE AND CENTRAL EUROPE

U.S. AGENCY FOR INTERNATIONAL DEVELOPMENT
BUREAU FOR EUROPE
WASHINGTON, D.C. 20523

PN-ABN-593

EVALUATION AUDIT REPORT
ROMANIAN PETROLEUM REFINERY
PETROTEL

A SELECTIVE REFINERY ANALYSIS FOR: OPERATION, ENERGY USE, ENVIRONMENTAL IMPACTS AND IMPROVEMENT OPPORTUNITIES
MAY, 1992

PREPARED BY: DAVY MCKEE CORPORATION, CHICAGO, IL USA
300 SOUTH RIVERSIDE PLAZA
SUITE 1800
CHICAGO, IL 60606
(312) 669-7000

PROJECT MANAGER: ARKADIUSZ WALINSKI
LEAD / PROCESS: WILBUR A. HOLVE
ELECTRICAL: TADEUSZ P. RASLAWSKI
INSTRUMENTATION: ALEXANDER I. STEINHAUS
MECHANICAL: NORRIS A. ROBERTS

U.S. EMERGENCY ENERGY PROGRAM FOR EASTERN AND CENTRAL EUROPE

U.S. AGENCY FOR INTERNATIONAL DEVELOPMENT
BUREAU FOR EUROPE
OFFICE OF DEVELOPMENT RESOURCES
ENERGY AND INFRASTRUCTURE DIVISION
WASHINGTON, D.C. 20523

USAID CONTRACT EUR-0015-C-00-1011-00

Davy

REFINERY EVALUATION AND AUDIT
PETROTEL, ROMANIA

TABLE OF CONTENTS

EXECUTIVE SUMMARY

A. INTRODUCTION

1. OBJECTIVES
2. REFINERY SELECTION
3. SUMMARY OF FIELD ACTIVITIES
4. REFINERY DESCRIPTION
5. TYPES OF ENERGY IMPROVEMENT OPPORTUNITIES
6. TYPES OF ENVIRONMENTAL EMISSIONS IMPROVEMENTS

B. REFINERY ENERGY BALANCE

1. OPERATING UNIT ENERGY USE

2. FUEL SYSTEM
2.1. Fuel Sources
2.2. Fuel Distribution
2.3. Fuel Users

3. STEAM SYSTEM
3.1. Steam Generation
3.2. Steam Levels
3.3. Steam Users

4. ELECTRIC POWER SYSTEM
4.1. Electricity Sources
4.2. Electric Distribution System
4.3. Electric Power Users

5. COOLING WATER SYSTEM
6. AIR COOLERS
7. ENERGY RECOVERY SYSTEMS

C. **REFINERY FLEXIBILITY**

1. OVERVIEW

2. ATMOSPHERIC/VACUUM DISTILLATION UNIT (DAV3)
2.1. Process Flow Diagram
2.2. Feedstock
2.3. Flexibility
2.4. Operational Sensitivity
2.5. Product Specifications
2.6. Unit Yields
2.7. Unit Modification Potential
2.8. Capacity Increase Potential
2.9. Operating Practices
2.10. Replacement/Shutdown Observations

3. PLATFORMING UNIT 4
3.1. Process Flow Diagram
3.2. Feedstock
3.3. Flexibility
3.4. Operational Sensitivity
3.5. Product Specifications
3.6. Unit Yields
3.7. Unit Modification Potential
3.8. Capacity Increase Potential
3.9. Operating Practices
3.10. Replacement/Shutdown Observations

4. FLUID CATALYTIC CRACKING UNIT 9
4.1. Process Flow Diagram
4.2. Feedstock
4.3. Flexibility
4.4. Operational Sensitivity
4.5. Product Specifications
4.6. Unit Yields
4.7. Unit Modification Potential
4.8. Capacity Increase Potential
4.9. Operating Practices
4.10. Replacement/Shutdown Observations

5. PLANT LIMITATIONS
5.1. Unit Capacities
5.2. Product Requirements
5.3. Fuel System
5.4 Steam System
5.5 Electrical Power System
5.6 Tankage
5.7 Other Limitations

D. **HEAT CONSERVATION**

1. HEAT TRANSFER PRACTICES

2. UNIT HEAT BALANCES
2.1. Atmospheric/Vacuum Distillation Unit
2.2. Platforming Unit
2.3. Fluid Catalytic Cracking

3. HEAT TRANSFER EQUIPMENT ANALYSIS
3.1. Fired Heaters
3.2. Heat Exchange Trains
3.3. Waste Heat Recovery
3.4. Economics of Increasing Surface Areas

4. STEAM SYSTEM
4.1. Steam Balance and Utilization
4.2. Selection of Pressure Levels
4.3. Condensate System
4.4. Insulation
4.5. Potential Effect of Energy Savings Projects to Steam Balance

5. HEAT REJECTION SYSTEMS
5.1. Cooling Water Systems
5.2. Air Coolers
5.3. Equipment, Piping and Stream Heat Losses
5.4. Recovery Systems
5.5. Tracing and Temperature Maintenance Systems

6. USE OF HOT OIL LOOPS

E. **MECHANICAL DRIVE SYSTEMS**

1. COMPRESSORS/DRIVES
2. SPECIAL PUMPS
3. ELECTRIC MOTORS
4. STEAM TURBINES
5. SPECIAL EQUIPMENT

F. **MAINTENANCE/MECHANICAL OBSERVATIONS**

1. OVERALL IMPRESSIONS

2. UNIT REVIEW

3. EQUIPMENT CONDITION SUMMARY
3.1. Fired Heaters and Boilers
3.2. Vessels
3.3. Heat Exchanger
3.4. Rotary Equipment
3.5. Specialty Items
3.6. Piping and Valves
3.7. Instrumentation
3.8. Electrical Equipment
3.9. Corrosion
3.10. Insulation Condition
3.11. Special Equipment

4. MAINTENANCE

G. **ENERGY LOSS MONITORING SYSTEMS**

H. **FUEL SWITCHING/UTILIZATION**

1. REFINERY FUEL SYSTEM

2. GENERAL REVIEW OF REFINERY USE OF COAL
2.1. Direct Coal Firing
2.2. Coal Gasification
2.3. Other Technologies

3. COAL AT THE PETROTEL REFINERY
3.1. Availability and Characteristics of Coal
3.2. Potential for Use
3.3. Economics of Use

I. **REFINERY EMISSIONS**

1. SUMMARY OF ENVIRONMENTAL SURVEY
1.1. Refinery Sulfur Balance
1.2. Air Emissions
1.3. Water Quality
1.4. Solid Wastes
1.5. Impact of Maintenance

2. HANDLING OF MATERIALS
2.1. Tetra-ethyl lead (TEL)
2.2. Aromatics
2.3. Solvents
2.4. Halogenated Hydrocarbons
2.5. Heavy Metals
2.6. Sulfur
2.7. Sulfuric Acid, HF
2.8. Combustion Products
2.9. Tars

3. MEASUREMENT OF EMISSIONS

J. **ENERGY EFFICIENCY IMPROVEMENTS**

1. IMMEDIATE OPPORTUNITIES
2. MEDIUM TERM OPPORTUNITIES
3. LONG TERM OPPORTUNITIES

K. **ENVIRONMENTAL EMISSIONS REDUCTIONS**

1. IMMEDIATE OPPORTUNITIES
2. MEDIUM TERM OPPORTUNITIES
3. LONG TERM OPPORTUNITIES

APPENDICES

APPENDIX A CHARACTERIZATION REPORT REFERENCE/ABSTRACT
APPENDIX B TERMS OF REFERENCE
APPENDIX C INSTRUMENTATION
APPENDIX D ELECTRICAL
APPENDIX E REFINERY ENERGY BALANCE AND "ENERGY DEMAND" CRITERIA
APPENDIX F PROCESS SIMULATION
APPENDIX G ECONOMIC ANALYSIS
APPENDIX H ENVIRONMENTAL CALCULATIONS
APPENDIX I ABBREVIATIONS

LIST OF TABLES

Table No.	Title	Page No.
B.1.1.	ENERGY EFFICIENCY COMPARISON PETROTEL REFINERY OPERATIONS 1990 - COMPARED WITH TYPICAL US OPERATIONS	B-3
B.2.1	FUEL GAS CHARACTERISTICS	B-5
B.2.2	FUEL OIL CHARACTERISTICS	B-5
C.2.6.1	DAV3 UNIT YIELDS FOR IMPORTED CRUDE BLEND	C-6
C.3.2	TYPICAL NAPHTHA FEED FOR THE NAPHTHA HYDROTREATER	C-9
D.1	FUEL UNITS SPECIFIC ENERGY DEMANDS	D-1
D.4.1	DESIGN BASIS - TWO THERMOELECTRIC POWER STATIONS AND ONE STEAM ONLY STATION	D-8
D.4.2	STEAM GENERATION PRESSURE/TEMPERATURE	D-9
F.3.1.1	PROCESS HEATER OPERATION	F-5
I.1.3.1	DISCHARGE WATER QUALITY TO TELEAJEN RIVER	I-3
I.1.3.2	DISCHARGE WATER QUALITY - CORLATESTI TREATMENT PLANT	I-3
I.1.4.1	SOLID WASTE ESTIMATE	I-5
AP-D.1.a	PROCESS POWER CONSUMPTION	AP-D-1
AP-D.1.b	PROCESS POWER CONSUMPTION - continued	AP-D-2
AP-D.1.c	PROCESS POWER CONSUMPTION - continued	AP-D-3
AP-D.1.d	PROCESS POWER CONSUMPTION - continued	AP-D-4
AP-D.1.e	PROCESS POWER CONSUMPTION - continued	AP-D-5
AP-D.1.f	PROCESS POWER CONSUMPTION - continued	AP-D-6
AP-D.2	TOTAL ELECTRIC POWER CONSUMPTION	AP-D-7
AP-D.3.a	SUBSTATION LIST	AP-D-8
AP-D.3.b	SUBSTATION LIST	AP-D-9
AP-D.3.c	SUBSTATION LIST	AP-D-10
AP-E.1	TYPICAL REFINERY UTILITY USAGE	AP-E-3
AP-E.2	TYPICAL REFINERY UTILITY USAGE	AP-E-4
AP-E.3	TYPICAL REFINERY UTILITY USAGE	AP-E-5
AP-E.4	TYPICAL REFINERY UTILITY USAGE	AP-E-6
AP-E.5	TYPICAL REFINERY UTILITY USAGE	AP-E-7
AP-E.6	TYPICAL REFINERY UTILITY USAGE	AP-E-8
AP-E.7	TYPICAL REFINERY UTILITY USAGE	AP-E-9
AP-E.8	TYPICAL REFINERY UTILITY USAGE	AP-E-10
AP-E.9	TYPICAL REFINERY UTILITY USAGE	AP-E-11
AP-E.10	TYPICAL REFINERY UTILITY USAGE	AP-E-12
AP-E.11	TYPICAL REFINERY UTILITY USAGE	AP-E-13
AP-E.12	TYPICAL REFINERY UTILITY USAGE	AP-E-14
AP-E.13	TYPICAL REFINERY UTILITY USAGE	AP-E-15
AP-E.14	TYPICAL REFINERY UTILITY USAGE	AP-E-16
AP-E.15	USA - TYPICAL REFINERY UTILITY USAGE	AP-E-17

LIST OF FIGURES

Figure 1 Overall Refinery Block Flow Diagram A-5

Figure 2 Simplified Process Flow Diagram
Atmospheric/Vacuum Distillation Unit No. DAV3 . . . . . C-4

Figure 3 Simplified Process Flow Diagram
Catalytic Reforming Unit C-10

Figure 4 Simplified Process Flow Diagram
Fluid Catalytic Cracking Unit No. 4 . . . . . C-14

EXECUTIVE SUMMARY

In 1991, the United States Agency for International Development (USAID) as an element of its Emergency Energy Program for Central and Eastern Europe, retained the Chicago office of the Davy McKee Corporation (DMC) to perform a technical study of ten of the eleven refineries that constitute the Petroleum Refining Industry of Romania. The results of the study are presented on two levels: Refinery Characterization and Selected Refinery Evaluation.

This report covers the results of an audit and evaluation of the Petrotel Petroleum Refinery in Romania. The Petrobrazi Refinery also located outside of the town of Ploiesti, was also selected for audit and evaluation. A separate report covers the characterization of the Romanian petroleum refining industry. Also, a separate report covers the structure and use of a computerized data base, which has been prepared from the data in response to a DMC questionnaire issued before the beginning of the field work.

The project started with meetings in early December 1990, between the United States and Romanian energy officials. During the meetings, a plan and schedule were developed for participation by Romania in the U.S. Emergency Energy Program. This evaluation report contains the elements agreed upon these initial meetings.

The goals of the program were to provide a data base for future planning activities in Eastern Europe to improve viability of the petroleum sector, support the achievement of improved energy consumption efficiency and support alleviation of adverse environmental impact. The study then addressed the potential for achieving substantial improvement in operations and energy efficiency and the disposal of solid, liquid and gaseous effluent - both by reduction in volume and method of handling. Order-of-magnitude capital requirements and simple payback time associated with identified opportunities form part of these evaluation reports. The Scope of Work, or Terms of Reference for this project may be found in Appendix B of this report.

At the outset of the project, teams were organized for both the characterization and evaluation efforts and consisted of engineering professionals with many years of experience in their respective disciplines in the design and technical operation of a petroleum refinery. Technical disciplines represented within the team were chemical, process, environmental, mechanical, electrical, and instrumentation engineering.

It should be noted that Rafirom required that DMC sign a Secrecy Agreement prior to release of information. Further, a similar agreement was executed with UOP of Des Plaines, IL. Each organization required review and approval of a draft report. Such review and approval has occurred.

The steps for acquisition of data for preparation of this evaluation report were divided into three stages.

> First, there was a preliminary, or reconnaissance visit to Romania during which a rather detailed questionnaire was furnished to the Petrobrazzi refinery representative.
>
> The second step was assembly in Chicago of the DMC team together with the host country consultants for a week of orientation.

The third stage of the evaluation and audit effort consisted of data collection at the refinery. This was done through meetings with operating managers and engineers of selected process units within the refinery. Visits to various process units by members of the team were also made.

During this visit, host country consultants were engaged to participate and provide technical assistance for the in-country phases of the work. In addition to such technical assistance, the consultants were able to provide custom and language interpretation to insure mutual understanding of the material presented.

The Petrotel refinery was the first of three major refineries surrounding the town of Ploiesti some 40 miles north of Bucharest, Romania. The refinery, located east of Ploiesti, originated as a Standard Oil of New Jersey (now Exxon) enterprise and remained under this ownership until 1948. The refinery suffered extensive bomb damage during World War II.

The facilities now consist of a series of Atmospheric and Vacuum Distillation Units and downstream operations together with a lube oil plant and associated olefinic and aromatics petrochemicals units steming from pyrolysis operations.

The original units were based upon processing sweet domestic crudes. This evaluation reviews the last series of refinery units constructed in 1980 and are rated at 3 500 000 tonnes/y capacity of imported sour crudes and similar in design to the sour crude units at Petrobrazi. The total crude capacity, including domestic feedstock, is 5.3 million tonnes per year.

This facility includes its own powerhouse. It also has an HF alkylation unit which has been shut down for two years for lack of suitable HF supplies and spare parts. The refinery is primarily electric motor driven. Cooling of process streams within the refinery is accomplished by first heat exchange against cooler fluids, followed by use of air coolers and finer trimming by cooling water. Circulating water is cooled in natural draft hyperbolic towers.

A last minute (or field) decision to include the Petrotel Refinery for audit and evaluation required that the field work be completed under a shortened schedule. This constraint required documentation and translation of essential evaluation data to be forwarded to DMC headquarters after the completion of the field work. Consequently, feedback questions had to be answered from a distance rather than through the ideal situation of one-on-one conversations between the refinery and DMC personnel. This disadvantage was alleviated somewhat because of the similarities in the process units between the Petrotel and the Petrobrazi Refineries.

Examination of the Petrotel documentation took place in their refinery offices 22 through 24 July 1991.

The DMC team received total cooperation from the refinery personnel insofar as they were in a position to answer queries immediately, or to obtain different answers from others. These discussions were often helpful to other team disciplines as well, at least for the orientation period, but were less so later, due to time limitations and availability of other key staff members in the mechanical, electrical, and instrumentation departments.

When the flow sheet review and technical discussions were completed, the refinery was inspected. Regarding process matters, no proper measurements were taken but the DMC team, through certain instrument readings, such as oxygen analyzers or temperature and pressures, were checked where possible. The team relied on the integrity and accuracy of the refinery's mass balance and utilities consumption information to reach process conclusions.

The environmental engineer visited Petrotel for 1.5 days after the other team members had left and a complete environmental audit was not taken. Meetings were held with the Director of Environmental Service and the supervisors of the water treatment, waste water treatment, and solid waste operations. During the discussions, the history of the development of the programs for the control of environmental releases was explained. Most of the audit results are based on the visual observations and experience of the auditor.

Romania began to import crude oil in 1970, primarily from Middle East countries (Iran, Iraq, Syria, Egypt, Saudi Arabia, Kuwait) Libya, in addition to the USSR. Until social and political changes occurred in Iran, this country was considered the main imported crude source. The design basis for new refineries built in the 70s was a 50-50% mixture of Iranian light and heavy crudes. As Iraq has important debts to Romania, Iraqi crude was also an important potential crude source and the subsequent Gulf crisis had a very strong effect on Romania's hard currency balance due to inability of Iraq to pay its debts in crude. During the late 80s, crude imports from the USSR became more important than previously, but it never had the same importance as in other Central and East European countries. After Comecon ceased to exist and the barter base for import was abandoned, Soviet crude lost any special position in Romania's important structure. A coordinated policy of crude import did not exist, and long term contracts intended to ensure a steady supply failed. Practically, crude was purchased on a spot base, resulting in low processing efficiency, as refineries were forced to switch crude very frequently or to shut down units for lack of feedstock.

Domestic crude production reached its maximum in 1970 when 13.6 million tonnes were extracted and processed. Since then, extraction decreased to 9.2 million tonnes in 1989 and 7.8 million tonnes in 1990. Although forecasting is risky, especially if based on the 1984-1987 experience, an estimated production of 6.5 to 7 million tonnes per year could be expected by 1995. Romanian crudes may be divided into three categories, Non-paraffinic, Intermediate and Paraffinic; all domestic crudes are low sulphur (less than 0.6 wt% sulfur).

Of primary concern to the Romanian petroleum processing industry at the present time is to find the financial means to import crude. In the coming 2-3 years, assuming the economy will gradually reach the 1989 level, Romania will need about 10-12 million tonnes/yr of imported crude to cover its internal consumption needs for petroleum products and to satisfy 50-60% of the demands for petrochemical feedstocks. As a natural decline of domestic crude production occurs, imported crude amounts needed for internal consumption will rise. One of the possible avenues for hard currency revenues could be toll processing of crude oil for interested companies.

During 1990, the total crude oil processed in Romania was approximately 20.6 million tonnes, as contrasted to a design rate of 32.65 million tonnes per year.

The rather high percentage of feedstocks for petrochemicals in the product slate is peculiar to Romania refineries, especially for the newer ones such as Petrotel. Fuel oils are also an important component of the product slate in supplying energy and heat production demands of the country. Supports for these demands is the principle reason the total installed throughput exceeds the demand of internal consumption. The planning envisioned that the surplus be exported and

consequently process units and their products were designed to meet international specifications. Changes in the international market refined product requirements occurred in the last year, mainly related to limitations on gasoline aromatic content, low or lead free gasolines, and lower sulphur in diesel fuels. Some reformate product is shipped to Petrobrazzi for aromatics extraction.

Substantial changes in product slate are not foreseen or expected to be changed in the near future, as gasoline, jet fuels, and diesel fuels will remain the principal products for export. Improvements in quality are needed for these products such as raising the octane number of unleaded gasoline (through the use of MTBE, alkylate, isomerizate) and decreasing sulphur content of diesel fuels (which means deeper desulphurization and higher hydrogen production.)

Crude is transported to the refinery by pipeline from the Constanta Harbor terminal and by pipeline from domestic oil fields. Products are shipped by pipeline, railway and over-the-road tank truck. In 1989, about 55% of total crude and product shipment was by pipeline.

Tetra-ethyl lead is still used as an octane booster in most of the gasoline produced as the majority of the cars in the country are manufactured to operate on leaded gasoline. A small amount of unleaded gasoline is currently produced for imported cars and tourists. As the Romanian gasoline market approaches the standards and practices of Western Europe, improvements in the refinery octane pool and the substitution of MTBE for lead can be anticipated.

The diesel fuel produced currently contains a maximum of 0.15 wt% sulphur. Eventually, the accepted worldwide sulphur content of diesel fuel is expected to be below 0.05 wt%. In addition, the aromatic content of both gasoline and diesel fuel products will have to be reduced to meet expected regulations and specification.

The major concern in reforming is to achieve the necessary RON octane levels in the reformate to meet the gasoline pool specifications with or without the permitted tetraethyl lead content. The reactor severity level required to accomplish this is entirely under operator control (space velocity and temperature) as long as the catalyst activity is satisfactory. Operator attention is also necessary for optimizing the run length and regeneration schedule.

Environmental pollution must be reduced by better treatment and disposal of pollutants of all kinds and by reducing losses, especially hydrocarbon vapor losses from storage tanks. Volatile products such as naphtha, gasoline and aromatic hydrocarbons are typically stored in fixed cone roof tanks. The empty, fill, empty cycle - plus thermal expansion produces a discharge of vapors into the atmosphere, causing product loss and air pollution.

As concern for the environment grows and wastewater regulations become more severe, additional treatment will be required for effluent water. In a similar way, equipment will be required for reduction of oxides of sulfur and nitrogen discharged to the atmosphere. Initially, existing sulfur plants need to be put back into service. The sulfur plant in the refinery is a two-stage Claus type capable of achieving about 95% sulfur recovery. A third stage or tail gas treatment unit will be required to achieve about 99% sulfur recovery and thus reduce sulfur discharged to atmosphere from this source to an acceptable level.

In the environmental area, middle- and lower-level management, as well as staff personnel at the refineries, are well aware of the opportunities for emissions treatment and operational improvement. However, these opportunities appear to have had a low priority for top management and possibly for the pre-existing Federal structure at the Ministry level.

The middle management of the Romanian refineries is well aware of the need for benefits and general features/aspects of energy saving programs. Several of these are in place and operating. However, the implementation of these programs was obstructed by lack of funds and a different order of priorities resulting from goals set by top management. For example, it is recognized by the refinery that process furnace efficiency can be significantly improved and be economically viable by installing an air preheater and more effectively controlling excess air to the burners, yet the project has not been implemented.

A different type of potential for energy saving, which also has a very definite environmental benefit, may be found in a program to install a secondary sealing system for floating roof type storage tanks. Here are the energy loss represented by product loss in venting to atmosphere can be equated to the energy consumed in its production. Conservation of weathered crude components can contribute to refinery output at relatively low specific energy input.

The Petrotel refinery energy efficiency suffers from the inability to continuously keep the CO boiler in service. As a result, the FCC is consuming about 43 percent of the total refinery energy requirements (three times what would normally be expected), and the Petrotel refinery operations as a whole is using about 160 percent of the energy that would be expected in a similar US refinery.

Petrotel has two power houses that are integrated into the national electric power grid and one steam only boiler house. Electricity is provided to Petrotel via two overhead 110 kV lines from a national grid power station owned by the Romanian Ministry of Energy. There has not been a power outage during the past five years. During the winter time, when the steam consumption is at its maximum, so is the electric power. At that time, 90% of the electric power consumption is met by the refinery generators. During the summer time about 80% of the plant load is furnished by its own generators. The power frequency drifts between a nominal frequency of 50Hz and 48Hz, and seldom reaches 50 Hz. This decreases pump outputs and efficiencies.

Section J. of this evaluation report recommends refinery additions or modifications that have the potential to achieve significant energy improvements. The presentation includes, in most cases, the capital costs and expected savings justifying the expenditures. Other recommendations, investigative in nature, might lead to a substantial return on investment.

A summary of the suggested energy improvements is as follows:

- Heat Utilization Efficiency Improvements - Improve the insulation of piping valves and equipment; keep fuel gas analysis under close study to ensure efficient combustion; and test reduction of stripping steam in the vacuum and the crude towers. Study the waste heater boiler tube corrosion to improve the heat recovery unit's on-stream time; monitor the heat exchanger energy fouling trends; and perform an energy audit on the FCC unit. Pinpoint possibilities for gaining additional preheat in the crude exchange train (Pinch study). Study opportunities for additional heat recovery by introducing a top pump around reflux or a preflash tower arrangement for the crude units. Initiate an effective combustion air control program on all process heaters.

- Operational Changes - Improve on-stream time and reduce maintenance costs through use of corrosion resistant material in the Ljungstrom air preheaters. Consider addition of a visbreaker for vacuum residue and a crude pre-flash tower. Test the reduction of stripping steam rates to the crude atmospheric and vacuum tower bottoms together with increased bottom side stream off-take. Consider a short-term test on decreasing desalter water application together with improved demulsifier selection.

- Operating Efficiency Improvements - Study use of variable speed drives and trim impellers on high head pumps. Investigate use of a power recovery turbine in high pressure liquid let-down service of the gas oil hydrotreater. Study the use of a power recovery expander turbine on FCU regenerator flue gas. Repair and return the FCU CO boiler to service. Study the addition of vacuum pumps to replace the steam jets on the crude vacuum towers.

- Acquisition of Software - Acquire software for simulation of refining processes, linear programming for economical optimization of refinery operations, and a database management system for inventory and historical maintenance record keeping.

No environmental emissions were either monitored or measured during the environmental engineer's visit. However, according to Petrotel's administration group, Romania has regulations establishing emission limits for various components. By observation only (no quantitative data were available) the level of air pollution is extremely high. The refinery does not have any modern instruments which would permit continuous monitoring of emissions from their many possible sources of air pollution. To date, the refinery management has not paid serious attention to the problems of environmental protection. Petrotel lacks experience and/or knowledge of methods of continuous emissions monitoring and its related instrumentation.

Currently there is no sulfur recovery system working. Based upon a 1990, production rate of imported crude at 2 050 000 tonnes c. 1.9 wt% sulfur (average) and 1 100 000 tonnes of 0.3 wt% sulfur domestic crude, the sulfur balance would be:

Sulfur to refinery	42 250 tonnes/y
Sulfur to fuel oil/product (as reported)	27 800 tonnes/y
Sulfur released to Atmosphere (by Diff)	14 450 tonnes/y

If the Amine System and the Claus unit were working the amount of sulfur recovered would have been 6 000 tonnes. This would have reduced the sulfur oxide emissions by 12 000 tonnes per year or the estimated plant emission would be 16 900 tonnes of sulfur dioxide per year.

Environmental improvement opportunities are also divided into immediate, medium term and long term categories and are presented in Section K. of this report. These recommended environmental improvements are presented in a manner similar to the energy improvement opportunities presented in Section J.

A summary of the suggested environmental improvements is as follows;

- Investigate the location and extent of soil contamination aimed at removing the source of ground water contamination. Investigate sludge blending to slow reactivation of the existing fluid bed incinerator and investigate the use of the water softening sludge for agriculture purposes.

- Reduce volatile organic chemical emissions to the atmosphere through better management of inter-unit hydrocarbon transfer and tank farm operations. Acquire a portable VOC analyzer for on-site monitoring of emissions. Establish an air monitoring system.

- Implement cooling water hydrocarbon removal activities.

- Investigate the economics of conversion to low nitrogen oxide burners.

- As the refinery moves from natural gas and low sulfur fuel oils to the high sulfur fuels obtained from processing high sulfur crudes, sulfur removal considerations need to be evaluated such as flue gas desulfurization or fuel hydrotreating.

- Improve the refinery maintenance to correct the following: excessive oil loss at tank farms, process units, waste water treatment plant, and railroad yard; product loss through excessive flaring; sulphur pollution resulting from shutdown of the amine/Claus units; and reduction of excessive carbon monoxide pollution by starting up the FCU CO boiler.

Some other observations made by the DMC team for the improvement of Petrobrazzi's operations are presented below:

Petrotel was designed to process a variety of crude oils. The age of the equipment in the process units is such that they will have to be evaluated technologically and economically with respect to practices at modern refineries in the West. Adaptation to competitive markets and a changed social structure reinforce the necessity for this evaluation.

The physical condition of the plant equipment, plus an absence of mechanical standards, require a large inventory of spare parts to assure continuous operation. An adequate inventory of spare parts has not always been possible due to lack of funds so that on-stream time suffers even though there is excellent capability in the maintenance staff for repairing equipment and machinery.

The process control strategy and instrumentation should be modernized with the incorporation of advance control concepts and distributed control systems, which in U.S. refineries has had very short payout times due to improved operations.

The potential future economic burden of the present large maintenance and operating staffs could put the refineries at a disadvantage with their Western counterparts. National social programs as they may affect labor practices and thus cost need to be watched closely.

It is to the advantage of each refinery to study and improve safety practices.

Additional crude oil storage capacity should be made available. Suitable instrumentation and equipment is also required for the accurate accounting of and the conservation of material during feedstock and product custody transfer and storage.

Acquisition of alternative crude feedstock will require consideration of their effects on processing units and ancillary facilities. Considerations of effects on capacity, ability to satisfy product specifications, corrosion protection, and removal of unwanted components are typical of the issues that must be addressed.

Significant element in the refinery energy efficiency is associated with material loss control. In the US, an accepted goal of good refinery practice is to contain losses to within the region of 0.5 weight per cent. This figure represents unavoidable or unrecoverable losses sustained through process unit upsets, startup or shutdown flaring, leakage or spillage, "fugitive" emissions from tankage or vents, etc. and it is the refinery operations task to keep all these losses to a bare minimum consistent with the design and condition of equipment. With such a standard for hydrocarbon losses, the loss reported for the operations of the crude unit alone of 5% is not only excessive, but also unacceptable. It appears that an emergency program should be instituted as quickly as possible to identify and take appropriate action to control and reduce all losses to levels not exceeding 1.0 wt% but targeted for a more reasonable level of 0.5 wt%. Hydrocarbon loss control can reduce the enormous financial losses incurred due to reduced foreign exchange for imported crudes and the physical losses of the lighter, valuable LPG-through-gasoline components of the crude. The reported losses of 3 to 5 wt% in Romania would exceed several times over the normally expected energy savings from an extensive energy recovery effort in operations and in revisions to the existing plant design.

Substantial reductions in the loss of hydrocarbons are possible at Petrotel through improved equipment maintenance, equipment refurbishment, and operating vigilance and closer attention by management and staff alike. An in-depth review of the refinery mass accounting system needs to be made and a correction of the deficiencies that may be found.

Therefore, if verified, the 5 wt% loss at the design operating rate of 3 500 000 tonnes/y if only reduced to 1 weight percent, would recover 140 000 tonnes/y of hydrocarbons which is worth some $8 680 000 per year when only valued as fuel oil.

A major refinery problem is the poor or worn-out state of rotating equipment and the lack of spares for proper maintenance. This problem also seems to extend to obsolete instrumentation for which spare parts are unavailable. In this regard, the solution is dependent upon financial and not technical limitations.

It may be expected that environmental regulations will become ever more stringent. Unleaded gasoline, fuel aromatic reduction, low sulfur fuel oils, and control of oxides of sulfur and nitrogen in atmospheric emissions are four examples of issues that will need immediate attention.

It is the opinion of the DMC team, that excellent opportunities exist to reduce the very high present day costs by reducing energy use. Management and operating personnel need to focus on these very fruitful areas. Other than the cost of crude, energy is the overwhelming main refinery cost. In modern U.S. refineries, energy costs are about 70% of the non-crude costs. Also economically, energy savings translate directly in hard currency savings.

A. INTRODUCTION

ACKNOWLEDGEMENTS

The Davy McKee Evaluation Team would like to express its gratitude to the management and staff of the Petrotel Refinery for their excellent cooperation and assistance. Special thanks are due also to the following individuals and the entire personnel in their department.

Emilian Moiceanu	Technical Director
Paul Stanescu	Chief Technical Department

1. OBJECTIVES

The objective of this report is to present opportunities for energy improvement and reduction of emissions for the Petrotel Refinery near Ploiesti, Romania. Other defined and specified goals of the study include a consideration of refinery operating flexibility, an evaluation of fuel switching opportunities, including the use of coal as a substitute for energy supply, and an observation of the plants general condition and of its maintenance practice for its effect on operations. A further objective is to characterize the modifications for achieving expected benefits in accordance with the magnitude of effort and capital requirements anticipated.

A summary of the stated USAID objectives of this study is as follows:

- To identify changes in operating practices and low-cost modifications to equipment that can be immediately implemented to increase the efficiency of energy utilization, to conserve energy by avoiding unjustified use, and to reduce as far as practical undesirable gaseous, liquid, and solid effluents.

- To identify, characterize, and recommend more-extensive changes in practices and equipment and modifications to the process units, which appear justifiable but at the same time require further study possibly with inputs that may not yet be available.

- To assist the management of each refinery selected in each country, as needed, in the implementation of the changes identified above through on-the-spot assistance (including training sessions for refinery personnel).

This report details the results of the Evaluation & Audit Study. The recommendations of this study to improve energy utilization operations (yields, practices, etc.) and environmental conditions are categorized as follows:

1. Immediate minimum cost recommendations: This category covers no cost to low cost modifications to the refinery that will be relatively inexpensive and easy to implement. The refinery can implement recommendations with its internal resources.

2. Short term intermediate cost recommendations: This category includes modifications and/or additions to the refinery that will be characterized by costs related to equipment purchases, and/or changes to process operating conditions that could be considered significant. Implementation requires outside resources and appropriate justification.

3. Long term substantial cost recommendations: This category characterizes primarily by significant modifications to current processing capabilities, or installation of additional process units to improve the refiner's competitive refining position into the 21st century. Implementation of this type of recommendation would be potentially expensive and time consuming. Implementation requires outside resources and justification based on changes in crude oil supply and in market conditions.

2. REFINERY SELECTION

At the initial stage of the originally scheduled evaluation of the Petrobrazi refinery installation commencing 15 July 1991, a request was made by the Romanian Department of Chemical and Petrochemical Industry that the DMC team undertake at least two refinery evaluations during the course of the visit. This request was ultimately accepted with the understanding that the period in the Petrobrazi refinery would have to be curtailed to meet with our longer range USAID schedule commitments. Furthermore, the second refinery would have to complete the necessary mass balance and utilities consumption documentation in a sufficiently comprehensive and complete a manner so that these data could be quickly assessed and utilized in rapid flowsheet reviews. Subsequently, the Petrotel operation was suggested since they had the equivalent sour crude processing facilities as Petrobrazi, except that vacuum fractionation was carried out for lubricating oils manufacture. This selection was accepted because a direct comparison between the two operating refineries could be made as they have identical design features. Therefore, the Petrotel refinery was selected for the second evaluation report.

The last minute (or field) decision to include the Petrotel refinery for audit and evaluation required that the field work be completed under a shortened schedule. This required both the evaluation team and the refinery staff to make efforts so that the documentation initially prepared for the Characterization Report would be updated to the level needed for the evaluation team's work. Some process flow diagrams were translated into English and sent to DMC after the evaluation team had left Petrotel.

3. SUMMARY OF FIELD ACTIVITIES

Examination of the Petrotel refinery documentation took place in their refinery offices 22 through 24 July 1991.

The evaluation team consisted of: A. Walinski, Project Manager; T. Raslawski, Electrical; A. Steinhaus, Instrumentation; N. Roberts, Mechanical; W. Holve, Refinery Process Engineer; and Stefan Stirmin, who is a senior adviser and head of the Technical Dept. within I.P.I.P.S.A. - the Romanian Design Institute for Petroleum Refineries, a Romanian consultant who provided translation and technical services.

The time for the flow scheme reviews and discussion was restricted but, as the units were essentially the same as at Petrobrazi, it was possible to move quickly and concentrate on observed differences in the specific energy demand documentation. The process evaluation concentrated on establishing a coherent understanding of the operations and utilities demand at Petrotel, leaving the visits to the processing units to be accomplished during the later visit by the evaluation team, which was briefed beforehand concerning the processing observations to be made.

The process evaluation program accordingly consisted of a detailed process flow diagram examination of the unit under review combined with a discussion with the appropriate process unit manager (together with a translator where necessary) of all major operating parameters that would affect energy efficiency.

The DMC team received total cooperation from the refinery personnel insofar as they were in a position to answer queries immediately, or to obtain answers from others. This total cooperation existed despite tie impediment of language differences and the patience that had to be exercised to assure that meanings were clear to both sides. DMC has relied upon the integrity and accuracy of the refinery's mass balance and utilities consumption information to reach process conclusions.

The team environmental engineer, C. Best, visited Petrotel refinery for 1½ days after the evaluation team had left and a complete Environmental Audit was not undertaken.

4. REFINERY DESCRIPTION

The Petrotel refinery was the first of three major refineries surrounding the town of Ploiesti some 40 miles north of Bucharest, Romania. The refinery, located east of Ploiesti, was originated as a Standard Oil of New Jersey (now Exxon) enterprise and remained under this ownership until 1948. The refinery suffered extensive bomb damage during World War II.

The refinery now consist of a series of Atmospheric and Vacuum Distillation Units and downstream operations together with a lube oil plant. Associated olefinic and aromatics petrochemicals units stemming from pyrolysis operations make up the associated petrochemical plant. The refinery simplified Block Flow Diagram is shown in Figure No. 1.

The original units were based upon the processing of the sweet domestic crudes. Of interest for our evaluation are the last series of refinery units constructed in 1980 for imported sour crudes at 3 500 000 tonnes/y capacity and similar in design to the sour crude units at Petrobrazi. The total crude capacity, including domestics feedstock, is 5.3 million tonnes per year.

This facility includes its own powerhouse and in addition has an HF alkylation unit which has been shut down for two years for lack of suitable HF supplies and spare parts. The refinery is mainly electric motor driven and air cooled with a considerable degree of trim water exchangers for the warm summer climate. Circulating water is cooled in natural draft hyperbolic towers.

5. TYPES OF ENERGY IMPROVEMENT OPPORTUNITIES

Section J of this evaluation report recommends refinery additions or modifications that have the potential to achieve significant energy improvements. The presentation includes, in most cases, the capital costs and expected savings justifying the expenditures according to the three categories of Section A.1. Other recommendations, investigative in nature, might lead to a substantial return on investment.

A summary of these suggestions is as follows:

- <u>Heat utilization efficiency improvements</u> - Improve insulation applications on piping valves and equipment; consider a short-term test to reduce desalter water use coupled with an improved demulsifier; keep flue gas analysis under close study to ensure efficient combustion; and test a reduction of stripping steam in the vacuum and crude towers. Study waste heater boiler tube corrosion to improve heat recovery unit on-stream time; monitor heat exchanger energy fouling trends; and perform an energy audit on the FCC unit.

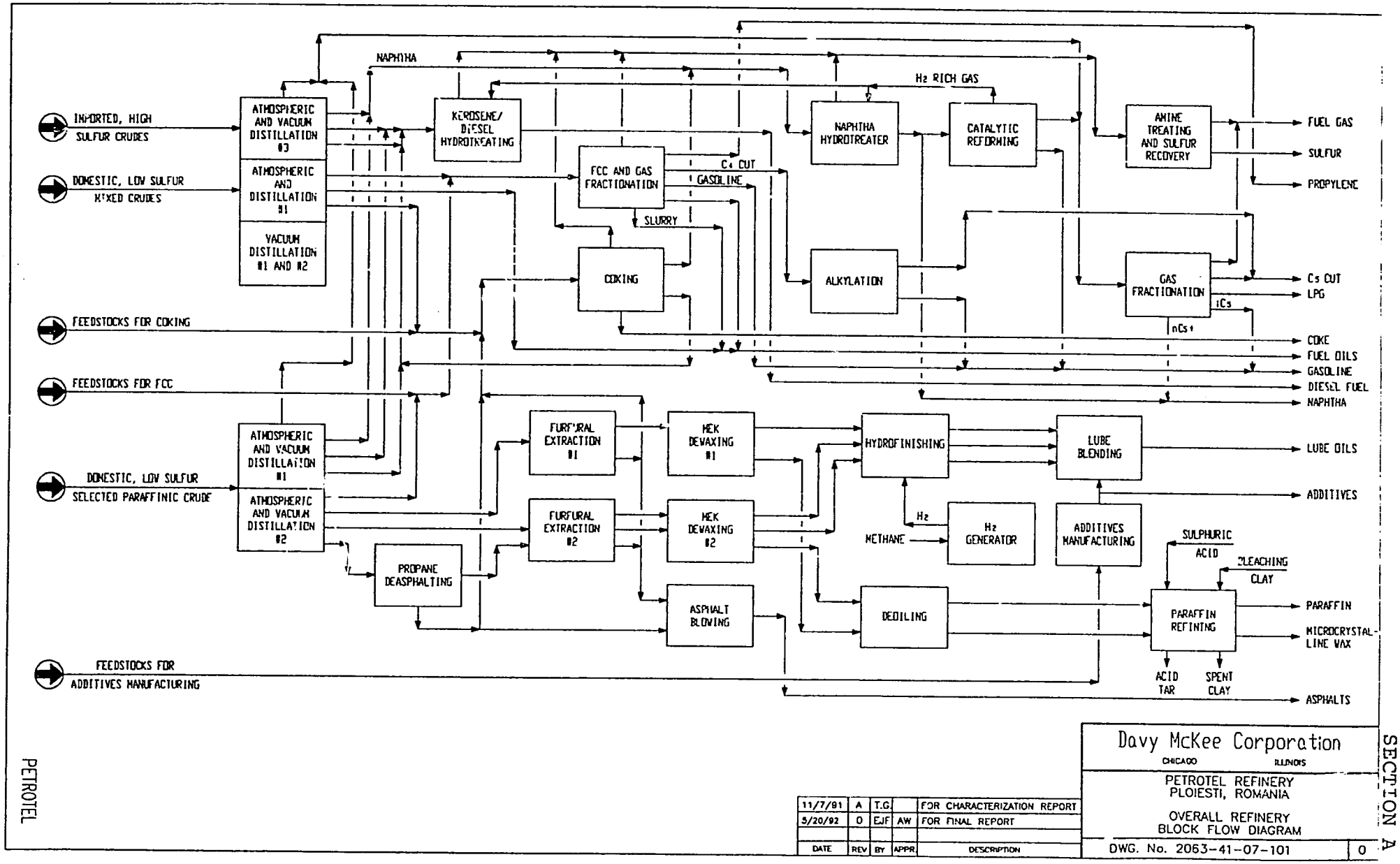
IMPORTED, HIGH SULFUR CRUDES
DOMESTIC, LOW SULFUR MIXED CRUDES
FEEDSTOCKS FOR COKING
FEEDSTOCKS FOR FCC
DOMESTIC, LOW SULFUR SELECTED PARAFFINIC CRUDE
FEEDSTOCKS FOR ADDITIVES MANUFACTURING
ATMOSPHERIC AND VACUUM DISTILLATION #3
ATMOSPHERIC AND DISTILLATION #1
VACUUM DISTILLATION #1 AND #2
ATMOSPHERIC AND VACUUM DISTILLATION #1
ATMOSPHERIC AND VACUUM DISTILLATION #2
PROPANE DEASPHALTING
NAPHTHA
KEROSENE/ DIESEL HYDROTREATING
FCC AND GAS FRACTIONATION
C4 CUT
GASOLINE
SLURRY
COKING
FURFURAL EXTRACTION #1
FURFURAL EXTRACTION #2
MEK DEWAXING #1
MEK DEWAXING #2
ASPHALT BLOWING
H2 RICH GAS
NAPHTHA HYDROTREATER
CATALYTIC REFORMING
ALKYLATION
HYDROFINISHING
DEOILING
H2
METHANE
H2 GENERATOR
AMINE TREATING AND SULFUR RECOVERY
GAS FRACTIONATION
iC5
nC5+
LUBE BLENDING
ADDITIVES MANUFACTURING
SULPHURIC ACID
CLEACHING CLAY
PARAFFIN REFINING
ACID TAR
SPENT CLAY
FUEL GAS
SULFUR
PROPYLENE
C5 CUT
LPG
COKE
FUEL OILS
GASOLINE
DIESEL FUEL
NAPHTHA
LUBE OILS
ADDITIVES
PARAFFIN
MICROCRYSTALLINE WAX
ASPHALTS
Davy McKee Corporation
CHICAGO ILLINOIS
PETROTEL REFINERY
PLOIESTI, ROMANIA
OVERALL REFINERY
BLOCK FLOW DIAGRAM
DWG. No. 2063-41-07-101
0
11/7/91 A T.G. FOR CHARACTERIZATION REPORT
5/20/92 0 EJF AW FOR FINAL REPORT
DATE REV BY APPR DESCRIPTION
PETROTEL
SECTION A

FIGURE 1

13

- Operational changes - Improve on-stream time and reduce maintenance costs through use of corrosion resistant material in the Ljungstrom air preheaters. Consider addition of a visbreaker for vacuum residue and a crude pre-flash tower.

- Operating efficiency improvements - Study use of variable speed drives and trim impellers on high head pumps. Investigate use of a power recovery turbine in high pressure liquid let-down service at the gas oil hydrotreater.

- Acquisition of software - Software for simulation of refining processes, linear programming for economical optimization of refinery operations, and a database management system for inventory and historical maintenance record keeping are recommended. See Appendix F for further in formation on the benefits of process simulation.

6. TYPES OF ENVIRONMENTAL EMISSIONS IMPROVEMENTS

Environmental improvement opportunities are also divided into immediate, medium term and long term categories and are presented in Section K of this report. These recommended environmental improvements are presented in a manner similar to the energy improvement opportunities presented in Section J. The environmental improvements, in addition to improving emission abatement, sometimes are also economically justifiable.

A summary of the suggested environmental improvements is as follows:

- Investigate the location and extent of soil contamination aimed at removing the source of ground water contamination. Investigate sludge blending to slow reactivation of the existing fluid bed incinerator and investigate the use of water softening sludge for agriculture purposes.

- Reduce volatile organic chemical emissions to the atmosphere through management of inter-unit hydrocarbon transfer and tank farm operations. Acquire portable VOC analyzer for on-site monitoring of emissions. Establish an air monitoring system.

- Implement cooling water hydrocarbon removal activities.

- Investigate economics of conversion to low nitrogen oxide burners.

- As the refinery moves from natural gas and low sulfur fuel oils to high sulfur fuels obtained from processing high sulfur crudes, sulfur removal considerations need to be evaluated such as flue gas desulfurization or fuel hydrotreating.

B. REFINERY ENERGY BALANCE

1. OPERATING UNIT ENERGY USE

To properly appraise the relative energy efficiency of the Petrotel refinery operations, an effective measure of the performance of typical US refining units was essential. The performance criteria must reflect the energy saving programs implemented in recent years. Two published references describe energy consumptions in the US refining industry based upon surveys and energy audits conducted through the mid 1980s, by which time the US refining industry had recorded energy utilization improvements of about 25 percent from the time of the oil crisis in 1972. Energy efficiency improvement continues at a rate of 1 to 2 percent per year.

The US statistics of refinery unit energy demands were presented in the English system of measurement (e.g., BTU per standard US barrel). By convention, European refiners prefer the metric system of measurement (e.g., kcal per tonne). Consequently, a conversion to European practice was made by providing typical API gravity values for unit feedstocks. Further, suitable conversions to basic fuel oil equivalence in kilocalories were made for electric power, steam generation or consumptions, and cooling water circulation rates. In this manner a table of Refinery Unit Energy Demand Criteria was established and used in the assessments of the Eastern European refiner's energy efficiency and performance. The full development of these energy demand criteria is in Appendix E.

The Petrotel refinery staff compiled records on individual unit feed rates, product yields and specifications, utilities consumptions, etc., at design conditions as well as data reflecting the performance for the preceding 12 month period. These data were summarized as specific utilities consumptions per tonne of unit feedstock. It is to be noted that the Romanians record their fuel consumption values in terms of "conventional fuel", which is defined as the heating value of carbon at 7 000 kcal/kg.

Due to extensive air cooling, an independent refinery or unit heat balance closure cannot be feasibly made except by an extensive indirect procedure of measuring and calculating the enthalpy changes in all the relevant process streams. Only under performance test run conditions for individual units could such a program be considered practical. Alternatively if a distributed control system (DCS) with the necessary field inputs were available and properly programmed, a heat balance closure could become possible.

At the present, Petrotel has not yet developed a computerized model of its plant as an operations aid and management tool. Computerization is in the planning stage and some accounting software has been authorized. With proper application, a computer model would help to assemble a comprehensive listing of

all energy users and / or generators and predict yield structures, utilities demands, equipment performance, maintenance schedules, etc. Petrotel should obtain expert assistance in evaluating and selecting the most appropriate software available to meet immediate and long term needs.

A compilation of the utilities consumptions for each of the Petrotel sour crude refining units converted to total energy demand was made and compared directly with typical modern day US practice as shown in Table B.1.1. This shows a fairly close correspondence with US energy standards for the atmospheric / vacuum distillation and platforming operations based on the reported data but a substantially poorer performance for other units, such as the gas oil hydrotreater and coker. Also, the vacuum unit was apparently operated for cat cracker feed stocks and not for producing lube oil fractions so its energy demand should have been even less than reported. Closer inter-refinery consultation would seem appropriate. The delayed coking unit's total energy demand is larger than a comparable U.S. Refiner's Coker. Petrotel's coker processing of cold feedstock (collected from various other refineries, rather than hot vacuum bottoms) probably accounts for most of the additional energy use. The most severe energy losses were identified with the FCC operation. The operations have been continued with inadequate and deficient equipment, and small improvements will not enhance energy economy. Maintaining the FCC in operation and producing cracked gasolines and gas oils are not justified in terms of costs and environmental penalties. The energy loss of bypassing the CO boiler are enormous. If the FCC regenerator cyclones are no longer capable of repair or are worn out, they should be replaced as soon as possible. There could be more serious issues involved but continued wasteful operation is not a practical solution even on a temporary basis.

TABLE B.1.1. - ENERGY EFFICIENCY COMPARISON
PETROTEL REFINERY OPERATIONS 1990 COMPARED WITH TYPICAL US OPERATIONS

Unit	1990 Oper. Capacity (tonne/y)	Note	Specific Energy Demands				Petrotel Total Energy Demand			Predicted US Energy Demand		
			Fuel (kcal/tonne)	Steam (kg/tonne)	Elect. (kwh/tonne)	CW (m^3/tonne)	kcal/ tonne	GKcal/ year	%	Kcal/ tonne	GKcal /year	%
Atm. / Vac. & Dist. Lubes	2 098 837 1 344 312		230 090	117.7	5.8	9.3	331 832	696.5	30.4	305 000	640.1	44.4
Naph. Hydrotreat.	224 168		302 540	0.0	29.0	9.5	377 708	84.7	3.7	200 000	44.8	3.1
Platforming Unit	170 362		760 690	197.0	9.5	30.9	940 000	160.1	7.0	950 000	161.8	11.2
Go. Hydrotreat.	184 264		303 800	-19.5	21.7	5.0	345 271	63.6	2.8	215 000	39.6	2.8
Alkylation	0	1	854 000	1 360.0	36.5	62.0	1 930 800	0.0	0.0	750 000	0.0	0.0
FCC & Gas Con.	684 721	2	994 000	407.8	58.9	45.5	1 448 780	992.0	43.3	580 000	397.1	27.6
Delayed Coking	210 189		461 720	511.4	28.4	25.0	902 906	189.8	8.3	450 000	94.6	6.6
Sat. Gas Plant	54 721			1 677.6	15.0	113.6	1 278 348	70.0	3.0	550 000	30.1	2.1
H_2S Recovery	1	3	49 630	494.9	10.0	46.9	448 073	0.0	0.0	3 650 000	0.0	0.0
Sulfur Plant	0	1					0	0.0	0.0	-1 000 000	0.0	0.0
TOTAL	3 627 263						714 498	2 256.7	48.6	388 244	1 408.3	97.8
% of Crude Run @ 10 000 000 Kcal/tonne (FOE see note 4)								12.35			6.79	
Fuel Blend.	1 600 000	2				USE	2 000	32.0	1.4	20 000	32.0	2.2
Complete Refinery Operations								2 288.7	100.		1 440.3	100.
Energy Requirements - % of Crude Run @ 10 000 000 Kcal/tonne (FOE)								12.50			6.86	
Energy Requirements - BTU/BBL Crude Feed @ 6 000 000 BTU BBL (FOE)								7 50036			411 732	

Table Notes:

1. Alkylation & Sulfur Plants not operational
2. Includes for 7.0 wt% Coke Burn @ 7 000 Kcal/Kg
3. Estimated
4. Energy Conservation Factors to Fuel Equivalents
   steam, Kg/h: use 540 Kcal/Kg @ 80% Eff = 675 Kcm/Kg say 700 Kcal/Kg Steam
   power, KWH: use 860.5 Kcal/KWH @ 35% Eff = 2 459 Kcm/KWH say 2 400 Kcal/KWH
   Cw, m^3/h: use 4.41x75/2 284x0.6 = 0.24 KWH/H x 2 400 = 579 Kcal/m^3 say 600 Kcal/m^3 CW

U.S. Refiner's Annual Reports over the past 5 years in energy efficiency show a 1 to 2 percent annual improvement in energy efficiency. On this basis, a further 5 to 7 percent decrease in energy demand at Petrotel should be expected and could be set as a goal for an energy improvement program based upon cost / benefit principles.

In preparing this report, DMC has accepted the reliability and accuracy of the utilities consumptions presented by Petrotel for its operations. No means of independent verification was readily available. It will benefit the Petrotel management to ensure that these data continue to reflect the actual operating performance so corrective action can be instituted wherever deficiencies are detected.

In summary, the results as shown in Table B.1.1. indicate the Petrotel refinery energy efficiency suffers from the inability to continuously keep the CO boiler in service. As a result, the FCC is consuming about 43 percent of the total refinery energy requirements, and the evaluated section of Petrotel refinery operations as a whole is using about 160 percent of the energy that would be expected in a similar US refinery. This conclusion is based on the data provided by Petrotel. The specific energy consumption of the FCC unit over the past year was influenced by operation of 68% of throughput with frequent start-up/shutdowns due to lack of feedstock.

In contrast to the FCC performance, the atmospheric / vacuum distillation and Platforming units compare favorably with the expected US energy demands. However, the vacuum fractionator was only making FCC feedstock and not lube distillates and, the Platformer only made 85 RON reformate instead of 91 RON product.

There are serious energy problems at Petrotel that can be ascribed more to the currently imposed mode of operation rather than to any serious deficiencies in design or operating practice.

2. FUEL SYSTEM

2.1 Fuel Sources

Gaseous fuels used in the refinery are essentially pure methane (natural gas) supplied by the national grid plus refinery fuel gas. These two systems are interconnected. Refinery gas usage is in the range of 9 000 to 10 000 Nm^3/h. Approximately 95 percent of the gas lines are installed above grade. Table B.2.1. shows the fuel gas characteristics, and Table B.2.2 shows the fuel oil characteristics.

TABLE B.2.1. - FUEL GAS CHARACTERISTICS

	Natural Gas (vol%)	Refinery Gas (vol%)
nitrogen	0.60	---
carbon dioxide	0.07	---
carbon monoxide	---	1.69
hydrogen	---	58.59
methane	99.23	10.05
ethane	0.04	19.41
propane	0.01	4.59
propylene	---	2.52
isobutane	0.02	1.71
normal butane	---	0.20
isopentane	---	0.42
butene	---	0.41
TOTAL	99.97	99.59
Density	0.559/15°C	N/A
Net Heat Value	8 519.83 Kcal/Nm^3	N/A

TABLE B.2.2. - FUEL OIL CHARACTERISTICS

	Low Sulfur Fuel Oil	High Sulfur Fuel Oil
Viscosity at 50 °C (°E)	25	22.3
Flash Point, °C	90	90-100
Sulfur Content, wt%	1.0	3.3-3.5
Heating Value, Kcal/kg	9 500	9 249

2.1.1 Process Heaters

The fuel for process heaters in the Petrotel refinery has been natural gas produced from domestic sources. Recently the refinery has started retrofitting burners to use heavy residual fuels with atomizing steam.

2.1.2 Power Boilers

The fuel for the power boilers built in 1956 has been natural gas produced from domestic sources. Since the source of natural gas has been depleting, the burners have been refitted with oil atomizing nozzles but less than desirable performance has been experienced.

Examples:

> A boiler was fired with heavy residual fuel with inadequate atomization. The resultant unburned fuel coated the boiler with unburned coke, which eventually ignited and destroyed the boiler.
>
> Another boiler was fired with heavy residual fuel oil having a high sulfur content. The breeching duct to the chimney stack was not protected from the acidic flue gas. This resulted in corrosion to the extent that the breeching duct will have to be replaced.

2.2 Fuel Distribution

The heavy residual oil is piped in insulated lines to the usage site. The oil is heated to reduce the viscosity for pumping and atomizing. Natural gas also is piped to the respective burners.

2.3 Fuel Users

<u>Oil burning</u>

The oil fired burners are located in the process heater in Distillation Unit #3 and at the power boilers. In the one year period between June 1990 and May 1991, fuel oil burned in the refinery amounted to 279 000 tonnes or 8.9 percent of the crude feed.

<u>Natural gas burning</u>

Natural gas burners are located in all the other units, including the sulfur recovery muffle furnace.

20

3. STEAM SYSTEM

3.1 Steam Generation

The 4.0 MPa boilers were originally fired with local natural gas, but recently some of the boilers were converted to the use of heavy fuel oil. The results have been severe sulfur corrosion difficulties and inefficient firing problems. Steam requirements are supplemented by process and waste heat steam generation within the refinery units.

Petrotel has two power houses that are integrated into the national electric power grid and one steam only boiler house. The power houses are designated as the "Old Power House" and the "New Power House".

Old Power House

The Old Power House has seven boilers and three 6 MW generators driven by three non-extractive back pressure turbines. The back pressure is 0.6 MPa. Boilers #1 through #5 were made in the USSR. Boilers #6 and #7 were made in Romania. Turbogenerators #1 and #2 were made in the USSR, and turbogenerator #3 was made in Romania. The USSR-made boilers and turbogenerators were built in 1956, and the Romanian-made boilers and turbogenerators were built in 1966. Boilers #1 through #5 vent into a common stack. Boiler #6 and #7 have a separate stack.

The design parameters of boilers #1 through #3 and boilers #6 and #7 are:

pressure	4.0 Mpa
temperature	450 °C
capacity	50 tonnes/h
actual capacity	40-45 tonnes/h

The design parameters of boilers #4 and #5 are:

pressure	4.0 Mpa
temperature	450 °C
capacity	130 tonnes/h
actual capacity	100 tonnes/h

The fuel is either natural gas or fuel oil. The fuel source is switched often. The Old Power House operates approximately half of the time using natural gas and half using fuel oil. There is no soot blowing or other methods of cleaning the operating boilers. Cleaning is performed only during shutdowns.

No oxygen analyzers are in operation on any of the boilers. Analyzers were installed in 1976 but had a brief life. The refinery now regularly uses Orsat analysis. The excess oxygen readings are 8 percent (average). The power station engineer believes that most of the high oxygen readings are due to air leaks in the boilers caused by aging. The forced draft and induced draft dampers are equipped with power drives and controlled from manual stations in the control room. Originally the boilers had an automatic level control loop, but they did not function properly. Level control is now manual and is based on the readings of a related level recorder.

There are three steam pressure let-down stations in the Old Power House. One station reduces the pressure from 4.0 MPa to 3.5 MPa by means of a manual valve. The other two are desuperheating stations. One station reduces the pressure from 4.0 MPa to 1.3 MPa (250 °C), and the other reduces the pressure from 4.0 MPa to 0.3 MPa (< 200 °C). There are both motor-driven and turbine-drive boiler feedwater pumps.

New Power House

The New Power House has three identical boilers and three 12 MW generators driven by three back pressure turbines with extraction. Back pressure is 0.6 MPa. Extraction pressures are 3.5 MPa and 1.6 MPa. Boilers #1 through #3 and Turbogenerators #1 through #3 were built in Romania in 1978 and 1979. Boilers #1 through #3 have a common stack.

The design parameters of boilers #1 through #3 are:

pressure	10.0 MPa
temperature	540 °C
capacity	120 tonnes/h
actual capacity	120 tonnes/h

The fuel used in the boilers is low viscosity (heated) atmospheric distillation bottoms. The pilot fuel is gas.

The boiler feedwater pumps are either motor driven or turbine driven. Combustion control is based on air / fuel ratio with draft pressure correction. However, an excess air signal is not incorporated into the combustion control loop nor is the excess air measured. The oxygen analyzers were originally installed for indication only. About two years after start-up, these analyzers became inoperative and have not been used since. Drum level is controlled by a three-element feedwater control loop. All boiler instrumentation in the New Power House is considered to be in normal working conditions.

There are no graphics on the control panels in either the Old Power House or the New Power House. Interlocks are hardwired. The New Power House has electromechanical programmers for burner management. The pilots have flame detectors.

Boiler House

The boiler house has six identical boilers that were built in Romania in 1980. The boilers vent into a common stack.

The design parameters of boilers are:

pressure	2.3 MPa
capacity	105 tonnes/h
actual capacity	105 tonnes/h

The actual production of steam is a function of demand. The fuel is low viscosity (heated) atmospheric distillation bottoms. The pilot fuel is gas.

Combustion control is based on air / fuel ratio with draft pressure correction. However, an excess air signal is not incorporated into the combustion control loop, nor is excess air measured. There are no oxygen analyzers. Drum level is controlled by a three-element feedwater control loop. All boiler instrumentation in the boiler house is in normal working condition. The boiler feedwater pumps are either motor driven or turbine driven.

Condensate

Condensate return to the power houses and to the boiler house is about 30 to 40 percent. The cooling water in the Old Power House is supplied from deep wells and from a lake located in the near-by mountains. This waste water is not recycled, but is treated and released to the river. Cooling water for the New Power House is a mixture of deep well water and water from the natural draft cooling tower.

3.2 Steam Levels

Steam is generated at a variety of pressure levels. Some steam is desuperheated or extracted from the turbogenerator sets to satisfy refinery demands. Although the pressures varied significantly throughout the refinery, the normal pressure levels are:

10.0 MPa	High pressure to new power station turbogenerators
3.5/4.0 MPa	High pressure to old power station turbogenerators
2.3 MPa	High pressure to the refinery
1.3/1.6 MPa	Medium pressure to the refinery
0.3/0.6 MPa	Low pressure to the refinery

The information provided by the refinery did not distinguish among steam levels for steam consumptions.

3.3 Steam Users

High pressure steam is utilized in the refinery turbine driven compression equipment. Lower pressure levels are used for light ends reboiling services and for steam stripping requirements aside from winter period space heating and line tracing needs. It was stated that clean condensate returned to the power house was about 30 percent.

4. ELECTRIC POWER SYSTEM

4.1 Electricity Sources

Electricity is provided to Petrotel via two overhead 110 kV lines from a national grid power station owned by the Romanian Ministry of Energy. These lines connect with the two main 110/6 kV transformers. There has not been a power outage during the past five years.

4.2 Electric Distribution System

Power at the 6 kV level is distributed between the main substation and the unit substations by cables, which are routed 85 percent underground and 15 percent in cable trays. All cables are of domestic fabrication.

4.3 Electric Power Users

Tables AP. D.1.a. through D.1.f, Appendix D, show the monthly electrical energy consumption for each process user for the period of June 1990 through May 1991. Table AP.D.2 shows total electrical power consumption (used, generated, bought and sold) for the same period.

5. COOLING WATER SYSTEM

5.1 Water Source

Cooling water and boiler feedwater is pumped from two lakes located north of the refinery. Also, water is pumped from 32 wells located within the refinery. Each well is capable of approximately 30 liters per second. Not all of the wells are presently operating. Following a recent earthquake, some of the well casings were damaged. The flow demand for the refinery is 400 cubic meters per hour.

5.2 Raw Water Treating

The raw water is pumped to the power station for treating. The treatment includes:

- Sand filters to achieve 250 mg/l maximum total solids
- Ion exchange softening, using Dowex MWA-1
- Half of the ion exchange towers are regenerated with sodium chloride. The other half receives acid treating.

5.3 Typical Cooling Tower

The cooling towers in Petrotel refinery are hyperbolic natural draft, using asbestos cement corrugated sheet for packing. The packing durability is not satisfactory; for example, on 23 July 1991, the cooling tower serving Crude Distillation Unit #3 and the FCC unit exhibited approximately one-third of the packing missing. The cooling water was bypassing the packing surfaces in large areas. At the time the cooling demand was reduced as the crude unit was shut down.

On 23 July 1991, the cooling water quality was very poor. Hydrocarbons were floating on the cooling water basin. Although the tower had been shut down and cleaned less than one week before, there were no plans to clean again in the near future.

See Section J of this report for opportunities and recommendations.

6. AIR COOLERS

The air fan coolers in the Petrotel Refinery are typically manually controlled. The fan blades are essentially fixed pitch, adjusted by maintenance personnel at overhaul, or during an unscheduled maintenance shutdown. The louvers are positioned manually by the unit operator using the exit process temperature as the control variable.

The fan motors are not reversible. Only single speed motors are used and the fans are turned off for cold weather operation.

7. ENERGY RECOVERY SYSTEMS

7.1 Process Heaters

The refinery has many heaters with a capacity greater than 12 Gcal/h. The heaters are not designed or equipped to achieve high energy efficiency. Oxygen analyzers were installed on some of the heaters, however, the analyzers are used for indication only. Most of the oxygen analyzers are in satisfactory working condition. However, these analyzers are not in-situ, zirconium oxide sensor types, and they have high sampling system maintenance problems.

The first problem is related to the frequency of calibration. Currently, these analyzers are calibrated only once a year in compliance with Romanian regulations. However, to ensure adequate accuracy and to minimize drift, the instruments need to be calibrated more often. The second is that most of the analyzers were manufactured in East Germany and production of these instruments is likely to be discontinued.

The energy efficiency of the process heaters could be greatly improved by implementing modern control instrumentation and modern advance control strategies. This could be done if the heaters are first modernized mechanically and equipped with additional instruments such as draft transmitters, combustion temperature transmitters, air and draft transmitters, reliable oxygen analyzers, and additional thermocouples. Currently, the heaters do not have air / fuel ratio control. This control could not be fully implemented because the heaters do not have power operated dampers for combustion control. Also, burners on most heaters are obsolete and are not equipped with flame detectors. Therefore, implementing modern control strategies at the present time is not possible.

The fuel flow to each heater is not measured and nor totalized. Although instruments for such measurements are in place, only total consumption of fuel for the group of heaters at each unit is measured. The reasons for such an approach were not given. However, the refinery could improve the efficiency of its heaters if it were able to measure the fuel consumed by each heater.

7.2 Heat Exchangers

All units utilize shell-and-tube exchangers to recover and/or exchange energy from the hydrocarbon streams. The process heaters have steam generation for energy recovery.

7.3 Fluidized Catalytic Cracking Unit

The unit was not operating. No data were collected 22 July 1991.

- The CO boiler was shut down; no energy recovery.
- A turbine expander-generator is being considered for energy recovery in the regeneration flue gas stream. US experience has shown this equipment in this service to be high maintenance with high erosion and requires a high degree of operational diligence.

7.4 Hydrocarbon Loss

A significant element in the refinery energy efficiency is associated with material loss control. In the US, an accepted goal of good refinery practice is to contain losses to within the region of 0.5 weight per cent. This figure represents unavoidable or unrecoverable losses sustained through process unit upsets, startup or shutdown flaring, leakage or spillage, "fugitive" emissions from tankage or vents, etc. and it is the refinery operations task to keep all these losses to a bare minimum consistent with the design and condition of equipment.

With such a standard for hydrocarbon losses, the loss reported for the operations of the crude unit alone of 5% is not only excessive, but also unacceptable. The off gas compressors were out of order but the mass balance indicates only 0.24 wt% gas content on crude. This gas loss can be accounted for even if, unfortunately, it must be flared due to mechanical failures. The poor condition of equipment will strongly contribute to excessive losses until reconditioning can be effected. It is possible that the loss indication above could depend on the accuracy of the mass balance accounting. This balance could be in error through the lack of suitably calibrated instrumentation.

27

It appears that an emergency program should be instituted as quickly as possible to identify and take appropriate action to control and reduce all losses to levels not exceeding 1.0 wt% but targeted for a more reasonable level of 0.5 wt%. Hydrocarbon loss control can reduce the enormous financial losses incurred due to reduced foreign exchange for imported crudes and the physical losses of the lighter, valuable LPG through gasoline components of the crude. The energy saving program may lead to energy efficiency improvements on the order of 1 to 2 percent FOE, reflecting an approximate 25 percent improvement based upon US experience. The reported losses of 3 to 5 wt% in Romania would exceed several times over the normally expected energy savings from an extensive energy recovery effort in operations and in revisions to the existing plant design.

Therefore, if verified, the 5 wt% loss at the design operating rate of 3 500 000 tonnes/y if only reduced to 1 weight percent, would recover 140 000 tonnes/y of hydrocarbons which is worth some $8 680 000 per year when only valued as fuel oil.

Substantial reductions in the loss of hydrocarbons are possible at Petrotel through improved equipment maintenance, equipment refurbishment, and operating vigilance and closer attention by management and staff alike. An in-depth review of the refinery mass accounting system needs to be made and a correction of the deficiencies that may be found.

C. REFINERY FLEXIBILITY

1. OVERVIEW

1.1 General

The Petrotel Refinery employs a combination of air and circulating water cooling. The majority of drives are electric motors, though some large compressors are steam-turbine driven. The units are arranged in widely spaced individual blocks allowing convenient access, but also involving considerable initial installation expenses and running costs necessitated by the increased length of process and utilities piping / cabling runs. This arrangement also requires numerous flue gas stacks and suitable waste heat recovery systems for enhanced energy economy.

1.2 Crude Composition

Usually the refinery receives a blend of imported sour crudes in range of 0.86 to 0.87 specific gravity (31 to 33 °API), although individual cargos may vary from 0.825 to 0.923 specific gravity (22 to 40 °API). If the wide variations in feedstock specific gravity can be controlled, the distillation sections of the plant would not be greatly affected. Of greater concern will be the PONA (Paraffin, Olefin, Naphthene, Aromatics) analysis of the lighter fractions and the total sulfur content of the crude blend. The PONA ratios are important to the aromatics yields and octane improvement level achieved by the reforming unit. Data on the crude oil characteristics are included in Appendix A.

The sulfur content influences the hydrogen balances throughout the refinery. It is an element of concern regarding final product quality and specification values with respect to the degree of desulfurization achieved. In addition, sulfur content affects the corrosion level likely to be experienced by the plant equipment. The viscosity index (VI) of the vacuum distillates is important to lube oil yields and wax content. Blends are not often used in lube production since the properties can vary significantly and final product quality could become uncertain and difficult to predict. This is not prudent for expensive processing operations. In general, the sulfur content and the vacuum distillate VI will be maintained within reasonable limits as extreme variations could cause unforeseen difficulties resulting in unprofitable operation.

1.3 Crude Charge Rate

The Petrotel refinery is operating at 60 percent of its design rating for the imported sour crude section of the plant. This level of operation leads to inefficiencies due to numerous shutdowns forced by lack of feedstock and long accumulated periods of downtime. When operating, Petrotel reports that the throughput averaged about 75 percent of design which should ensure reasonable efficiency levels. However, operational profitability would be greatly enhanced at normal operating rates nearer the design figure of 3.5 million tonnes per year. If necessary, the charge rate could be increased to 110 percent of design since this is generally the minimum capacity factor built into any design. Any limiting equipment items that are identified could quite readily be improved or replaced if the need arose. During the one year period between June 1990 and May 1991, of the 3 149 000 tonnes of crude processed, 1 103 000 tonnes were domestic and 2 046 000 were imported.

1.4 Product Splits / Volumes

No difficulties are anticipated if moderate shifts in the existing product splits are made as long as they meet normal, world-recognized petroleum product specifications. An important factor, not yet practiced, is the enhancement to profitability of operations of an optimum product splitting scheme based on market conditions that can only be determined with some certainty by linear programming techniques and predicted future crude slates and product slate scenarios.

In this respect, the production of petrochemical feedstocks does involve some sophisticated product splitting arrangements, but it was not clear how the transfer pricing for the intermediate stocks was determined or if the preparation of the petrochemical feedstocks was beneficial or detrimental to the refinery's overall financial position.

1.5 Product Specifications

The Petrotel refinery is constructed with a considerable degree of flexibility for the production of automotive fuels and petrochemical feedstocks from domestic sweet crudes and / or imported sour crudes.

For gasoline products, the Platformers, FCC unit, and the alkylation unit (when operable) all offer suitable opportunities for octane improvement in the gasoline pool to comfortably meet the 95 RON premium grade and 87 RON regular grade gasolines at a maximum 0.6 grams per liter lead content in the home market. However, some difficulty in meeting the specification requirements in export

markets for high octane gasolines with low or no lead contents could be expected. For this reason, discussions are underway with UOP for converting the Platforming Unit 4 to a Continuous Catalytic Reformer (CCR) in order to attain the higher severities necessary for high octane blending stocks.

For the light and middle distillate streams, the atmospheric distillation unit is capable of controlling the boiling ranges and flash points of jet and diesel oil streams. These streams are subsequently hydrotreated further to control sulfur content to within the maximum specification levels.

2. ATMOSPHERIC / VACUUM DISTILLATION UNIT DAV3

2.1 Process Flow Diagram

A simplified Process Flow Diagram is shown in Figure No. 2.

2.2 Feedstock

The unit was designed for processing a 50/50 blend of Iranian Agha Jari / Gach Saran high sulfur crude oils. Currently the unit operates with an undefined mix of Middle Eastern crudes that average 0.86 to 0.87 specific gravity. It is expected that any future selections of crude feed will be dictated by the need to control the sulfur content for environmental reasons and a reasonable aromatic production capability in the naphtha fractions for the supply of petrochemical feedstocks.

2.3 Flexibility

No difficulty in operational flexibility consistent with temperature and pressure limitations and maximum vapor load criteria are apparent. The fractionators are equipped with valve trays permitting turn down to levels in the region of 30 to 40 percent. The equipment metallurgy, designed for processing sour crudes, should permit the handling of even high naphthenic acid content South American crudes.

2.4 Operational Sensitivity

Any variation in crude composition could be accommodated consistent with the design criteria and equipment capacity limitations for the production of both petrochemical precursors and automotive fuels.

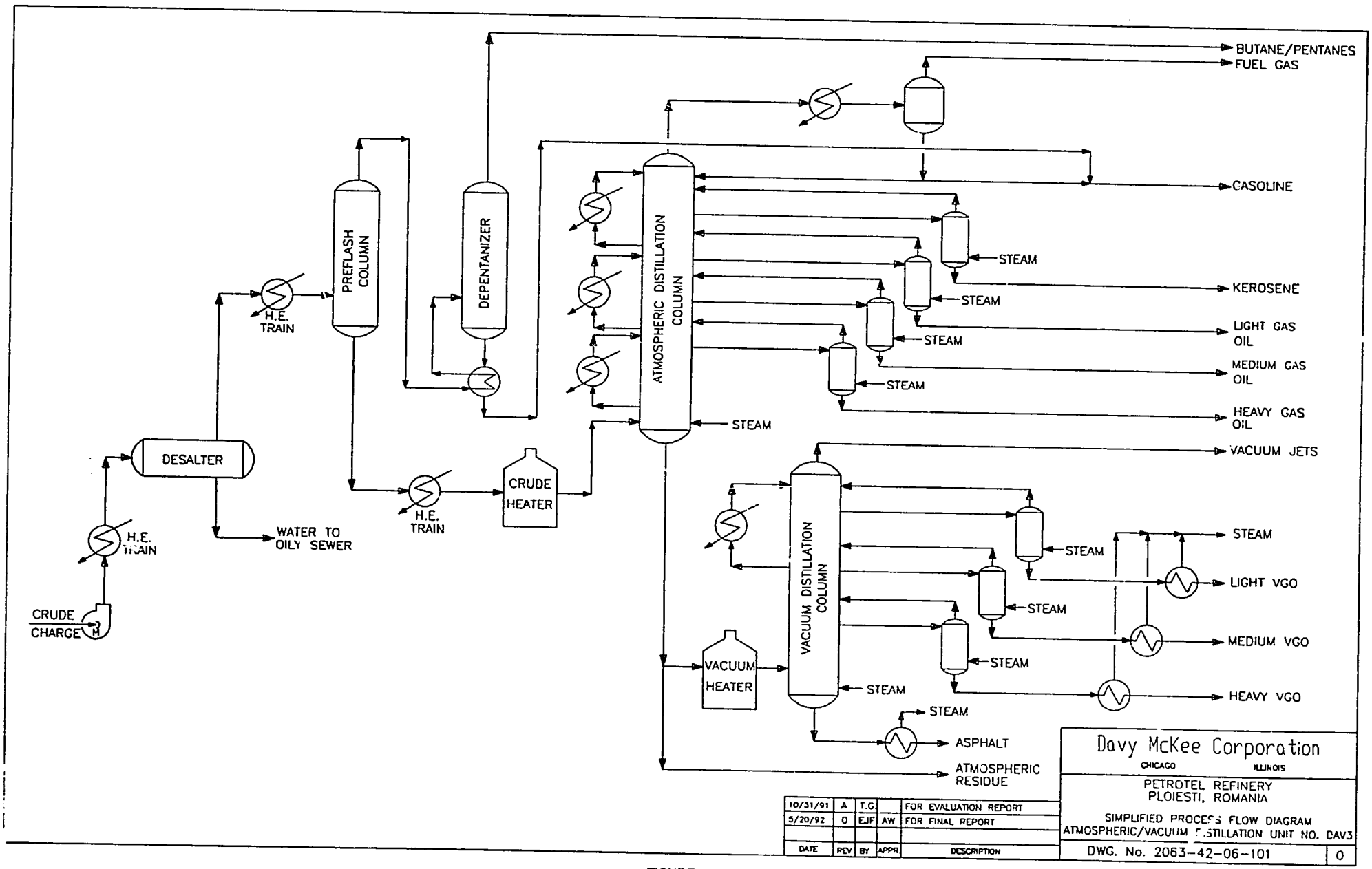
BUTANE/PENTANES
FUEL GAS
GASOLINE
KEROSENE
LIGHT GAS OIL
MEDIUM GAS OIL
HEAVY GAS OIL
VACUUM JETS
STEAM
LIGHT VGO
MEDIUM VGO
HEAVY VGO
ASPHALT
ATMOSPHERIC RESIDUE
ATMOSPHERIC DISTILLATION COLUMN
VACUUM DISTILLATION COLUMN
PREFLASH COLUMN
DEPENTANIZER
DESALTER
H.E. TRAIN
CRUDE HEATER
VACUUM HEATER
WATER TO OILY SEWER
CRUDE CHARGE
Davy McKee Corporation
CHICAGO ILLINOIS
PETROTEL REFINERY
PLOIESTI, ROMANIA
SIMPLIFIED PROCESS FLOW DIAGRAM
ATMOSPHERIC/VACUUM DISTILLATION UNIT NO. DAV3
DWG. No. 2063-42-06-101
0
DATE REV BY APPR DESCRIPTION
10/31/91 A T.G. FOR EVALUATION REPORT
5/20/92 0 EJF AW FOR FINAL REPORT

FIGURE 2

2.5 Product Specifications

The naphtha fraction is subsequently hydrotreated and refractionated for heart-cut Platforming to either aromatic rich or full range reformate gasoline blending stocks. Consequently, the main specifications to be met and controlled at the crude unit are the boiling ranges of the kerosene and light / heavy gas oil fractions and the kerosene / light gas oil flash points. In addition the color, viscosity, and pour point of the heavy gas oil are important to final blended diesel specifications and to minimize any losses of straight run diesel oil components to the vacuum distillate FCC feedstock stream.

2.6 Unit Yields

The unit yields reported for imported crude are summarized in Table C.2.6.1.

TABLE C.2.6.1 - DAV3 UNIT YIELDS
FOR IMPORTED CRUDE BLEND

Description	WT%
Fuel Gas	0.24
C_2-C_5	1.43
Gasoline	14.72
Kerosene	0.58
Gas Oil	18.99
Atmospheric Bottoms	64.04
Vacuum Gas Oil	20.79
Vacuum Hy. Oil	0.47
Vacuum Residue	37.78
Loss (by difference)	5.00
TOTAL	100.00

It is observed that the cut points are less than conventional US practice. This was particularly evident with catalytic cracker operations and to a lesser degree for both atmospheric and vacuum distillations. However, sulfur content of the residue must be a consideration in the Petrotel planning and operations.

The indicated loss level is excessive and steps need to be taken to decrease this loss to a more acceptable value.

2.7 Unit Modification Potential

Even though Petrotel is an older refinery with some obsolete, shutdown units, the layout is generally spacious and good access is available from the perimeter and to individual items of equipment. Therefore, few problems should exist in carrying out advantageous energy-improving modifications.

2.8 Capacity Increase Potential

The existing valve tray systems are restrictive to vapor / liquid tower traffic. Conversion of the existing valve tray systems to suitable structured packings has been estimated to increase capacity by approximately 10 percent. Although a further, more detailed examination is recommended, it is expected that a potential increase to 120 percent of the original flooding rate of the tower could be achieved for the distillate fractions. To accomplish this rate, however, it is assumed that improved crude preheating arrangements would have been fulfilled so that the design duty of the heater(s) would not be exceeded. In addition, it is assumed that the existing pumps and motors would be able to provide the necessary equipment pressure drop while still maintaining flow controllability.

2.9 Operating Practices

Operator attention is given to maintaining reasonable excess oxygen levels (3 to 6 volume percent) in the heater flue gas. These levels are maintained by manual adjustments at the air registers, based upon Orsat analysis.

As at the Petrobrazi Atmospheric / Vacuum Distillation Unit, the design concepts for the equipment arrangement includes a considerable degree of heat recovery by steam generation. The comparison of energy demands show a reasonable correspondence at 108.8 percent of typical US practice for an atmospheric crude distillation combined with vacuum fractionation for lube oil cuts. However, these data actually reflect operations for the past 12 months when no lube fractions were listed as being produced but only a wide range vacuum gas oil cut for FCC feedstock. Consequently, the stripping steam consumption figures should have been considerably lower than what was reported.

A direct comparison of the Petrobrazi and Petrotel operations shows a close correspondence in fuel, electricity, and cooling water consumption per tonne of throughput. but Petrotel uses nearly twice as much steam. We believe this difference reflects the higher pressure drop experienced through the trays of the Petrotel vacuum tower leading to additional steam injections to the vacuum heater and flash zone for hydrocarbon vaporization and partial pressure correction. With this adjustment, it can be seen that the Petrotel specific energy demand is some 13 percent greater than the Petrobrazi operation at a slightly lower vacuum residue cut point.

Desalting water injection was given as 7 to 9 wt% which is quite high but desalting levels to a very reasonable 5 ppm were achieved. We would suggest that the water injection could be reduced to the region of 3 to 4 wt% without an excessive decrease in desalting efficiency especially if a reasonable holding period and good drainage can be accomplished in the crude storage tanks.

Any improvements that might be discovered by a simulation of the Petrobrazi atmospheric tower and a "pinch" evaluation of the crude preheat train would be equally applicable to the Petrotel unit.

Current operations are carried out at about 75 percent of design capacity so significant power losses are incurred by excessive pressure drops at control valves. The stated national program for the introduction of variable frequency electrical motors above a 50 KW rating should help alleviate major power losses. It is suggested that any such improvement program should be applied strategically to maximize the global benefits and also include a comprehensive evaluation of the efficiency of driver-pump combinations so that all the poor performance installations can be upgraded.

Similar to Petrobrazi, the plan is to revamp the present valve trayed vacuum tower to structured packings so as to eliminate or minimize steam injection to the vacuum heater.

The crude and vacuum heaters are equipped with stripping steam superheating coils and air pre-heaters but the flue gas contains 6 to 7 volume per cent oxygen based upon Orsat readings and the stack gas temperature is high at 230 to 250 °C. Dual fuel burners are used. It was suggested that efforts to decrease the excess oxygen to 3 to 4 volume per cent would be helpful for both fuel economy and achieving lower stack temperatures. In addition, a reference was given to the development of a high efficiency steam atomizing burner for their interest.

Individual side stream stripping steam rates were apparently not measured but the total stripping steam quantity used was given as 15 tonnes/h. At the reduced capacity throughput rates and the production of FCC feed stock instead of lube fractions, it appears to us that the stripping steam rate could be reduced by approximately 30 percent.

As at Petrobrazi, another program being planned which will be of great significance is the District Heating Scheme extension for the town of Ploiesti. This very commendable project should utilize the reservoirs of low level heat rejection to the benefit of the local community as well as providing a useful income source to the refinery while avoiding some of the other expenses involved in the rejection of waste heat to air or cooling water.

2.10 Replacement / Shutdown Observations

There is no need to consider shutdown or replacement at this time.

3. PLATFORMING UNIT 4

3.1 Process Flow Diagram (Simplified) is shown in Figure No. 3.

3.2 Feedstock

The reformer feed stock for the design capacity of 500 000 tonnes per year consists of hydrotreated straight run naphtha from Petrotel's Atmospheric Distillation Unit. Up to 40 percent of the coker naphthas are included in the hydrotreating step. In contrast to the Petrobrazi operation, no reformate aromatics are produced at Petrotel. Instead, some reformate product may be shipped to Petrobrazi for aromatics extraction while the remaining production is sent to the gasoline pool. Typical specification for naphtha feed are shown in Table C.3.2.

Table C.3.2 - TYPICAL NAPHTHA FEED FOR THE NAPTHA HYDROTREATER

End Boiling Point, °C	185
Dist., vol wt%	1.0
Lead, ppm	0.3
As, ppm	0.003
Total Sulfur, wt%	0.02
Iodine No., gm Iodine/100gm Naphtha	1.5

3.3 Flexibility

The conventional fixed bed reforming reactor stacked system presently employs an East German catalyst requiring a lower space velocity than the original design UOP Catalyst R-50 for treating Mid East stocks successfully to 91+ octane levels. Arrangements are now under way to convert the unit to a Continuous Catalytic Reforming (CCR) system. In this connection, the low octane-barrel output problem may not be especially severe as presently the plant is operating at a partial capacity level of about 35 percent. The hydrogen rich gas recycle compressor is steam turbine driven with a portion of the 3.5 MPa steam required generated by a flue gas waste heat boiler.

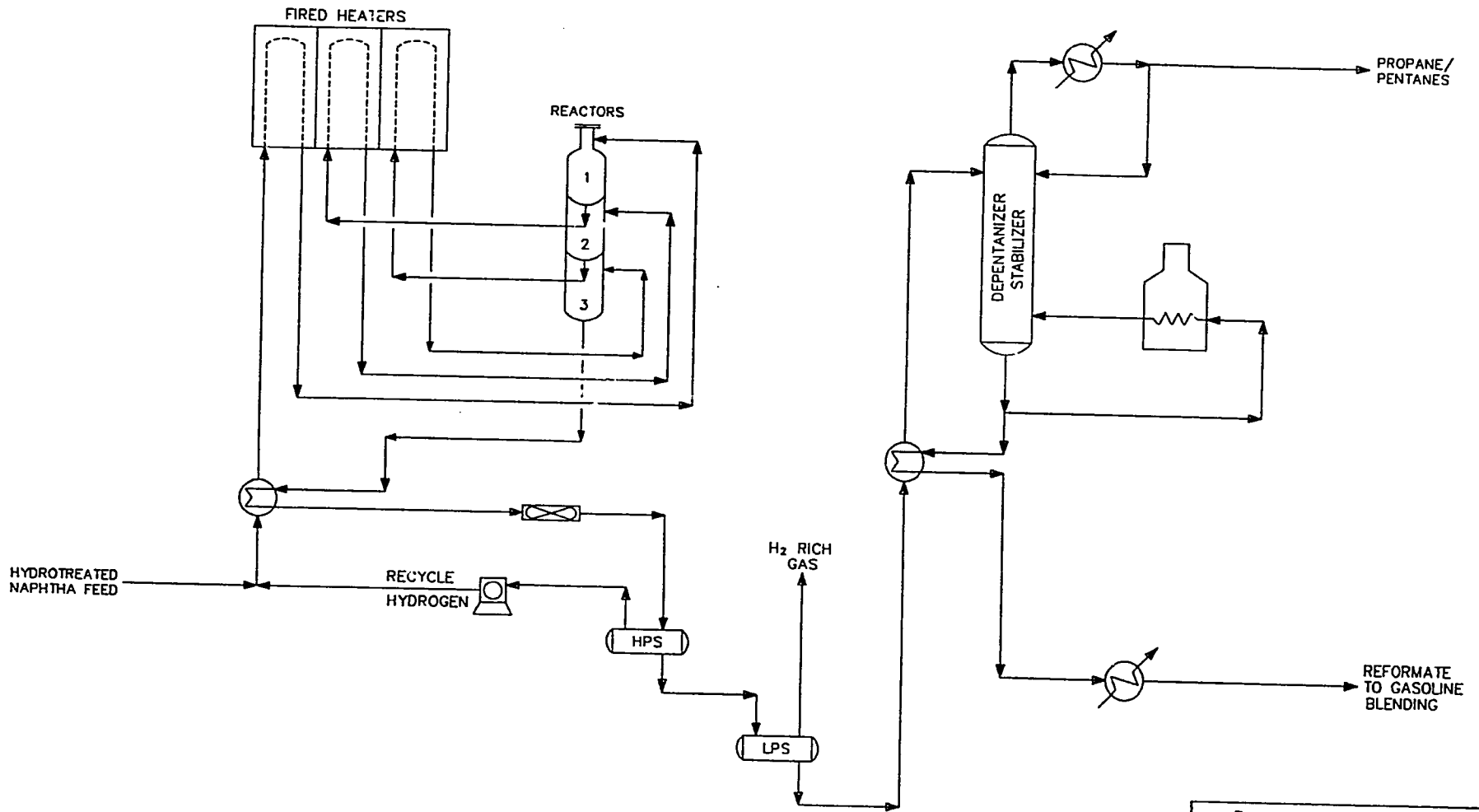

DATE	REV	BY	APPR	DESCRIPTION
10/31/91	A	T.G.		FOR EVALUATION REPORT
5/20/92	0	EJF	[illegible]	FOR FINAL REPORT

Davy McKee Corporation
CHICAGO ILLINOIS

PETROTEL REFINERY
PLOIESTI, ROMANIA

SIMPLIFIED PROCESS FLOW DIAGRAM
CATALYTIC REFORMING UNIT

DWG. No. 2063-[illegible]2-06-102 | 0

FIGURE 3

3.4 Operational Sensitivity

It appears that a variety of crude blends could be processed at Petrotel, so the reaction severity and product yield distribution could vary quite markedly if the PONA (Paraffin, Olefin, Naphthene, Aromatic) analysis of the naphtha fraction fluctuates very widely. Furthermore, these fluctuations will reflect changing BTX (Benzene, Toluene, Xylene) contents in the reformate and thereby affect their utility as a premium export product for BTX recovery.

3.5 Product Specifications

The major concern in reforming is to achieve the necessary RON octane levels in the reformate to meet the gasoline pool specifications with or without the permitted tetraethyl lead content. The reactor severity level required to accomplish this is entirely under operator control (space velocity and temperature) as long as the catalyst activity is satisfactory. Operator attention is also necessary for optimizing the run length and regeneration schedule.

3.6 Unit Yields (as reported and documented)

Capacity: 500 000 tonnes/y

Description	wt%
Reformate	91.00
C_3-C_6 liquid cut	1.82
Hydrogen rich gas	2.98
Fuel gas	2.20
Loss	2.20
Total	100.00

This yield structure indicated quite moderate operations to achieve the rather low 85 RON level during the past 12 months. The design octane level is reported at 91.5 RON. However, see also further comments below.

3.7 Unit Modification Potential

As mentioned earlier it was stated that discussions have started with UOP for removing the limitations of the existing reactor system with a revised and improved continuous catalytic reforming reactor arrangement together with any necessary revamping to the remaining sections of the present plant.

3.8 Capacity Increase Potential

This point will be dependent upon the outcome of UOP discussions mentioned under Section C.3.7 above.

3.9 Operating Practices

High pressure (3.5 MPa) steam is generated by the hot flue gases from the reactor heaters. These heaters are refinery gas fired and a program of refractory replacement has been under way with the renewal of the number 1 heater, which is now completed. Air leakage has been minimized in this heater and the excess oxygen content in the flue gas is now down to 6 to 6.5 volume per cent compared with Orsat readings of 8 to 8.5 volume per cent for heaters number 2 and 3. The installed oxygen analyzers are not operable. No air preheat is used and the stack gas temperature level was given in the range of 240 to 320 °C.

Surprisingly, these facts seem to contradict the performance of the similar unit at Petrobrazi where 25 percent more fuel use was reported with oxygen levels at 3 to 4 volume per cent.

However, it was also noted that the reported reformate RON octane level was 85 Max. This low level is apparently due mainly to a split tube in the reactor feed / effluent exchanger leading to a considerable degree of bypass and as a result, lower firing rates to the heaters on the low RON level. The net result is that the platformer is not accomplishing its job of producing reformate at a 91 or 92 RON level which would be expected as reasonable for the local market.

Other related problems could explain some of the difficulties experienced by Petrotel operators.

The fuel gas system pressure and composition is subject to severe fluctuations, apparently due to units coming on stream or shutting down unexpectedly. Pressures apparently can vary quite rapidly from 0.05 to 0.15 MPa so that even when heater burners are trimmed for a good firing efficiency, they could need additional attention a short while later due to fuel gas system variations. Attempts are being made to find a suitable way of stabilizing the system.

Similar to Petrobrazi, a standard flare gas recovery system (gas holders and compressors) has been installed at Petrotel. Due to time limitations, no information regarding this system was reviewed and thus its effectiveness or its possible role in stabilizing the fuel gas system could be undertaken at this stage. It was felt this would be more appropriate for future second phase investigations.

The associated naphtha hydrotreating unit suffers from many shutdowns due to broken valve springs on the reciprocating recycle gas compressor. This compressor is of English manufacture and the spare parts supply is exhausted. Apparently, they are trying to duplicate the valve springs by local manufacture with limited success. It is unclear whether spare parts are still available or if there is a problem in obtaining the funds for the purchase of the proper spares.

3.10 Replacement / Shutdown Observations

Refer to comments under Section C.3.7, Unit Modification Potential.

4. FLUID CATALYTIC CRACKING UNIT 9

4.1 Process Flow Diagram (Simplified) is shown in Figure No. 4.

4.2 Feedstock

The Petrotel Fluid Catalytic Cracking Unit is rated at 1 000 000 tonnes/y and was commissioned in 1979. The design, under UOP license, was completely engineered and constructed by Romanians and utilizes a variety of zeolitic catalysts.

The design feedstocks comprise a mixture of straight run vacuum gas oils and up to 40 wt% of light and heavy coker gas oils and lube plant slack waxes. The unit is operated at high conversion levels with gasoline yields approaching 45 wt%.

4.3 Flexibility

An FCC is inherently a very flexible operation and capable of handling a wide variety of feedstock options, including heavy residues under certain conditions. In other respects, however, there are several absolute constraints on FCC operating parameters and these include the air compressor for the regenerator coke burning limits and the reactor off gas compression capacity to the associated gas concentration or vapor recovery section of the unit.

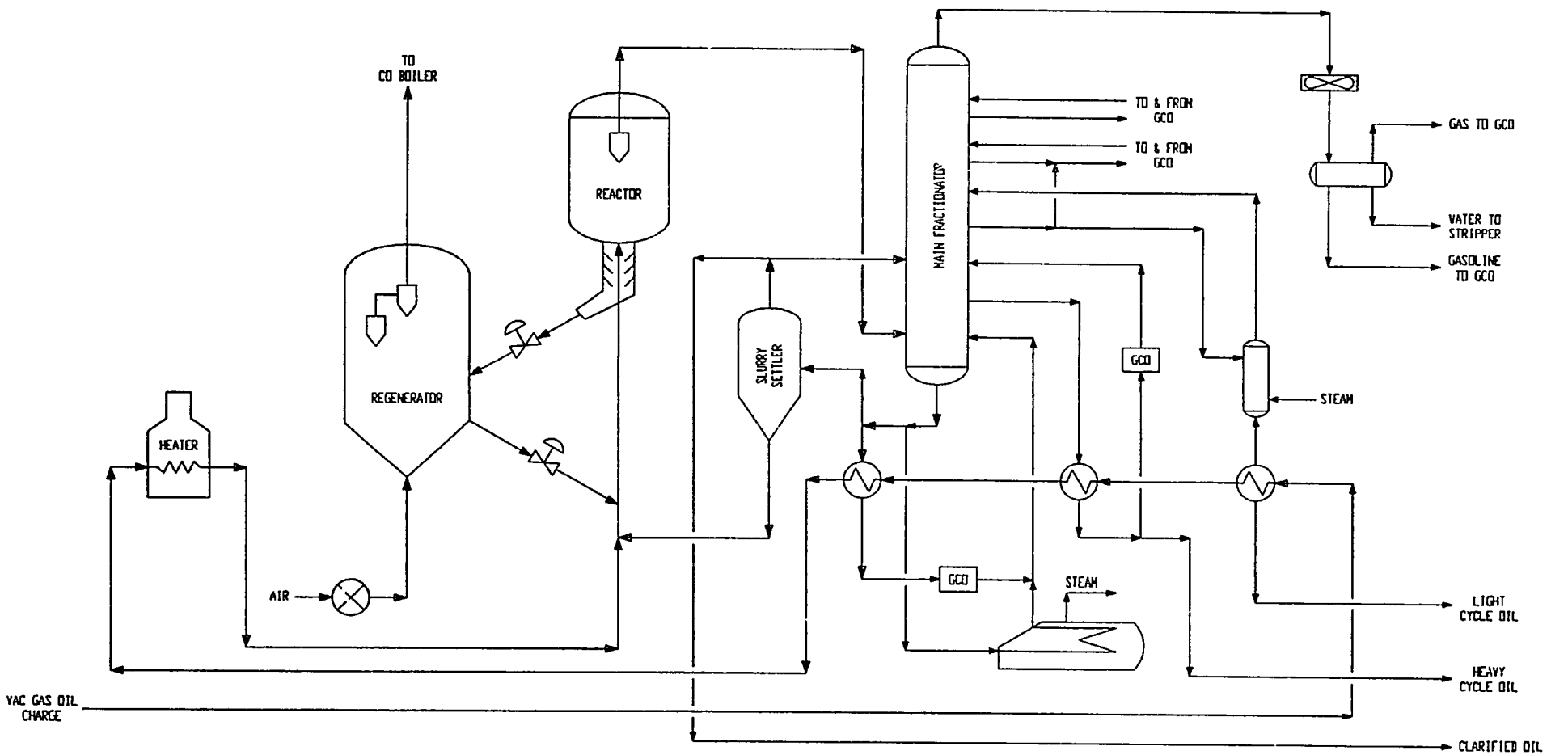

NOTE: GCO = GAS CONCENTRATION UNIT

DATE	REV	BY	APPR	DESCRIPTION
10/31/91	A	T.G.		FOR EVALUATION REPORT
5/20/92	0	EJF	AW	FOR FINAL REPORT

Davy McKee Corporation
CHICAGO ILLINOIS

PETROTEL REFINERY
PLOIESTI, ROMANIA

SIMPLIFIED PROCESS FLOW DIAGRAM
FLUID CATALYTIC CRACKING UNIT NO. 4

DWG. No. 2063-42-06-103 | 0

FIGURE 4

4.4 Operational Sensitivity

Strict limits on the gross operating capacity of an FCC are fixed in terms of the installed capacities of the air and reactor off gas compressors as indicated above. However, within this region of operation, wide variations in conversion, yield structures and feedstock compositions can be readily tolerated by appropriate catalyst formulation selection and adjustment of operational conditions without causing any special difficulties to the unit's performance.

4.5 Product Specifications

The main FCC fractionator operates essentially as a synthetic cracked crude distillation unit with similar methods applied for the control of product distillation ranges, flash points, etc. There is, however, the additional problem of controlling contamination by small catalyst particles that accumulate in the heavier oil fractions and which must be settled out and recycled.

In the gas concentration section of the unit, the large quantity of olefinic light gases are merox treated for sulfur control and separated by a combination of absorption recovery and classical fractionation methods to the degree of purity that might be warranted for fuels or more especially petrochemicals use.

4.6 Unit Yields (as reported and documented)

Description	wt%
Fuel gas	12.0
propylene	2.9
propane	0.6
i-butane/butene	3.6
n-butane/butene-2	2.8
gasoline	42.6
light gas oil	11.0
residue	16.0
coke (+loss)	8.5
Total	100.0

4.7 Unit Modification Potential

Critical to the modern operations of Fluid Cat Crackers is the energy recovery made possible by the existing CO Boiler to the regenerator flue gas stream. This enables not only the recovery of sensible heat in the flue gases but also the heat of combustion of the significant carbon monoxide content of these gases.

Regrettably, the Petrotel FCC Operations and consequently the energy demand for this unit suffer the serious deficiency of having the CO Boiler bypassed at the present time. Currently, discussions are being held with UOP to improve the Petrotel FCC energy demand by installing a turboexpander recovery system.

4.8 Capacity Increase Potential

The unit is rated at 1 000 tonnes/y throughput. Associated with the energy demand enhancement, Petrotel has UOP studying an FCC modernization (including capacity expansion) along with AVD unit revamping.

4. 9 Operating Practices

The FCC unit has a dedicated hyperbolic cooling tower for its cooling water system. Another adjacent, though separate, cooling tower is committed to the atmospheric vacuum distillation unit coolers but cross over lines were installed some time in the past to permit linking of the cooling services between the two units. This has had some unfortunate consequences in that, as explained to the DMC team, some severe oil contamination, from leaks in the distillation units, have been transferred to the FCC system resulting in considerably increased fouling and a need for frequent exchanger cleaning. In particular, this has led to poor heat transfer and a bottleneck in the gas concentration unit compression coolers.

It was also reported that severe sulfur corrosion problems are effecting fractionator overhead air fin units and water coolers. A major difficulty has been the use of carbon steel material with no available inhibitors to moderate any corrosive attack. It was pointed out, that low-fin tubing had been installed to enhance heat transfer capabilities but only lasted 6 months. It was understood there are plans to install stainless steel units.

Another factor leading to poor energy efficiency and losses is the necessity for frequent shutdowns due to equipment failures of one type or another or due to the lack of feedstock. If a more stable operating regime could be assured with the renewed equipment it is quite certain that there would be substantial improvements to the unit performance as well as for the refinery as a whole.

The FCC heater is provided with convection heating of the process stream and air preheating. However, the amount of excess oxygen in the flue gas could not be provided since the sampling pump was not working on the oxygen analyzer. Apparently, no Orsat readings had been taken recently. It was claimed that the stack gas temperature was "low" but this could not be verified.

The most likely possibility for future energy recovery is the addition of an expander for the regenerator flue gas which has already been under review by the refinery staff and UOP. At the same time, the unit has suffered some metallurgical problems in the regenerator and riser sections of the plant so a general revamp has also been under discussion with UOP. A full program to ensure the mechanical integrity of the unit, so that a reasonable energy economy can be assured, will be a priority item.

4.10 Replacement / Shutdown Observations

See comments in Section C.4.7. regarding corrective repairs.

5. PLANT LIMITATIONS

5. 1 Unit Capacities

For the time being, The Romanian refineries are currently operating at reduced rates, approximately 55 percent of design capacity on an annual basis. However, unit operations are generally scheduled for hourly throughput rates on the order of 70-90 percent of design with periodic extended shutdown periods until feedstock supplies are replenished.

5. 2 Product Requirements

Reduction in the amount of petrochemical feed stocks by the refinery would most significantly increase the availability of hydrogenerated naphtha feed to the reformer due to the decreased petrochemical plant pyrolysis needs. Consequently, it would appear that the reformer capacity would increase and more gasoline would be produced.

Should there be a reduced demand for the refinery fuel products more hydrogenerated naphtha might be available for pyrolysis (naphtha cracking), though FCC and lube production could also be restricted.

As refinery product demand is already low with operating capacity close to 50 percent of design, the serious question that should be under strategic review is

the shutdown of inefficient or obsolescent refining capacity to strengthen the remaining refining structure of Romania.

5. 3 Fuel System

As supplies of natural gas dwindle, arrangements will have to be made for imported supplies or conversion of additional units to heavy fuel oil firing.

5. 4 Steam System

When the old power station needs to be replaced, a high pressure 10 MPa or greater steam pressure should be considered. this steam would be fed to turbogenerators with admittance, extraction and back pressure of the lower steam pressures to help balance the steam system. this should also allow shutting down the boiler house.

5. 5 Electric Power System

There is no restriction in power supplied with the National Power Station located adjacent to the refinery. It is to be noted that the refinery has been free of power outages for the past five years.

5. 6 Tankage

Time did not permit any review of the operations or status of the tank farm. However, at design capacity of 5 300 000 tonnes/y, the crude tankage capacity is about twenty (20) days of normal refinery running.

5. 7 Other Limitations

The major problem is the poor or worn-out state of rotating equipment and the lack of spares for proper maintenance. This problem also seems to extend to obsolete instrumentation for which spare parts are unavailable. In this regard, the solution is dependent upon financial and not technical limitations.

The Petrotel HF alkylation unit has been shut down for several years. We understand the unit has suffered severe corrosion from the use of locally produced anhydrous hydrogen fluoride as a replacement for supplies originally obtained from France. Consequently, it would appear worthwhile to investigate a conversion of the unit in the future to sulfuric acid alkylation which would better suit locally produced materials. It would also be more acceptable from an

environmental and safety viewpoint. This approach could be needed when low or no lead gasoline production becomes an international requirement.

Heavy corrosion was exhibited in the sulfur recovery Claus furnace and the sulfur storage vessel. This unit has not been operated for the past two to three years.

It is possible that energy savings could be possible with a well considered change of extraction solvent from furfural to N-Methyl pyrollidone (NMP). However, the greatest advantage would be shown if phenol had been the existing solvent for viscosity index (VI) improvement. The economic issue of locally available furfural compared to hard currency NMP deserves strong consideration in this regard.

It is our considered view that there are many greater opportunities for the improvement of operations and savings in energy use at Petrotel and that any investigations into the use of NMP should be deferred until the rest of the refinery has been modernized and it's overall performance has been raised to more acceptable levels.

D. HEAT CONSERVATION

1. HEAT TRANSFER PRACTICES

The Atmospheric / Vacuum Distillation Unit DAV, Platforming Unit 4, and the Fluid Catalytic Cracking Unit 9 received a detailed review of operating conditions in Section C. The documented energy demands for these units, compared with typical US requirements are shown below.

Table D.1 - Fuel Units Specific Energy Demands

No.	Unit	Petrotel Specific Energy Demand kcal/tonne	Petrotel vs. US %	US Specific Energy Demand kcal/tonne
DAV	Atmospheric/Vac. Distillation	331 832	1.088	305 000
4	Platformer	940 000	0.989	950 000
9	FCC & Gas Con	1 448 750	2.438	580 000

These selected results, together, comprise well over 80 percent of the total sour crude refinery energy demand. The FCC, in particular suffers from the decommissioned CO boiler necessitating a high import of steam for continued operations. Fuel requirements also appear to be excessively high and not compensated by adequate recovery of waste heat in steam generation or in other process heat recovery services. The Platformer operation appears satisfactory in terms of specific energy consumption but, in fact, due to feed leakage and product bypass in a failed exchanger bundle, the units octane improvement performance is inadequate for the recorded energy expenditure.

The crude / vacuum unit should be able to be brought into line with expected US practice by closer attention to excess oxygen at the heater burners and by optimizing desalting water and stripping steam applications. These views reflect vacuum operations for the production of fractionated vacuum gas oils for lube production. If, as indicated in the documentation provided, the vacuum gas oils are only utilized as FCC feed, further energy economics should be sought since close fractionation is not critical to the down stream FCC Unit operation. Decreasing the pressure drop in the vacuum fractionator and a higher recovery of the diesel cut in the atmospheric section could also save energy.

Decreasing the pressure drop in the vacuum fractionator and a higher recovery of the diesel cut in the atmospheric section could also save energy.

2. UNIT HEAT BALANCES

2.1 Crude Unit

We have previously remarked upon the large degree of steam generation included in the design of this unit which mirrors the similar unit installed at Petrobrazi. Again, our opinion is that a considerable benefit could be gained by a careful "pinch" analysis of the heat exchange train to determine if an improved and more efficient exchanger arrangement is possible for the recovery of higher level heat sources. it is clear that the results of any efforts in this direction at either Petrotel or Petrobrazi could have a similar application at the other refinery.

Allied with any "pinch" study, we would also urge that computer simulations of the distillation columns be carried out in an effort to find improved operating parameters that will minimize specific energy consumptions while maintaining or improving existing product qualities, provided the refinery could succeed in diminishing the frequent changes in crude quality.

2.2 Platforming Unit

It is clear that the heat exchanger failure will have to be corrected before any significant further comment can be made upon the energy efficiency of this unit when operating to produce realistic product qualities.

2.3 Fluid Catalytic Cracker

Aside from the major loss of the CO boiler installation being inoperative for the recovery of energy values from the catalytic cracker regenerator, this unit suffers further from the many shut downs caused by poor cooling water quality, rotating equipment failures and feedstock availability. All these problems contribute to a low stream factor with decreasing energy efficiency and accentuates material losses, maintenance needs, decreasing catalyst activity, and possible safety problems.

The energy cost of this unit detracts enormously from the capability of the entire refinery. Therefore, it is clear that immediate attention must be given to the proper and long term repair of the affected equipment in order for the refinery to remain viable in international terms. A careful analysis of steam generation is also needed to ensure a continuous operation of the CO boiler.

3. HEAT TRANSFER EQUIPMENT ANALYSIS

3.1 Fired Heaters

Crude Distillation Unit #3, Heater H-1

The crude distillation unit #3 process heater H-1 has the following surface area:

Radiation Section :	740 m^2
Convection Section:1	182 m^2
Steam Coil:	110 m^2

The heater was operated, circa July 1991, at the following conditions:

Hydrocarbon flow:	221 m^3/h
Hydrocarbon Inlet temperature:	196 °C
Hydrocarbon Exit Temperature:	336 °C
Steam flow rate:	6 000 kg/h
Steam pressure:	0.35 MPa
Type of fuel:	Natural gas
Flue gas oxygen content:	4%
Flue gas exit temperature:	200 °C

There is the capability of burning heavy residual fuel oil with steam atomization in the heater. No fuel flow measurements were available to determine the flow at the above operating conditions.

The flue gas oxygen content and the flue gas exit temperature indicate that the energy usage is 90.5 percent of the energy available in the fuel gas. See Section J for recommendations for adjusting the burner dampers for a more optimum flue gas oxygen content. The flue gas temperature is near the minimum for safe operation when sulfur is in the combustion gas. The natural gas fuel is sulfur free, however, the residual fuel oil contains sulfur.

Crude Distillation Unit #3, Heater H-3

The crude distillation Unit #3 Process heater H-3 surface area was not available. The flow rates of hydrocarbon, fuel, and steam also were not available.

The operating data, circa July 1991, is as follows:

Hydrocarbon inlet temperature:	320 °C
Hydrocarbon exit temperature:	426 °C
Type of Fuel:	Natural gas
Flue gas oxygen content:	4 %
Flue gas exit temperature:	200 °C

The hydrocarbon exit temperature and flue gas exit temperature indicate that steam is generated in the heater, although no data of steam flow rate and pressure is given. The approximate heat recovery by the steam generated is estimated to be 10 percent of the heat value of the fuel, based on the flue gas temperature, hydrocarbon exit temperature, and flue gas oxygen content. congruently, approximately 90.5% of the heating value of the fuel is utilized.

See Section J for a recommendation to adjust the burner dampers for a more optimum flue gas oxygen content. The flue gas temperature is near the minimum for safe operation when sulfur is in the combustion gas. Although the natural gas used July 1991 was free of sulfur, the heater is capable of burning residual fuel oil, which may contain sulfur. No recommendation for additional energy recovery is possible if the result lowers the flue gas temperature.

Crude Distillation Unit #3, Heater H-2

The Crude Distillation Unit #3 Process Heater H-2 is a duplicate of Process Heater H-1. See Section D.3.1.

Naphtha Hydrofinishing Heater #1 (Tag 44861)

The Naphtha Hydrofinishing Heater has the following surface area:

Radiation Section	94 m^2
Convection Section	285 m^2
Steam Coil	285 m^2

The heater was operated, as observed in July 1991, at the following conditions:

Hydrocarbon flow, radiation section:	125 m^3/h
Hydrocarbon flow, convection section:	6 000 kg/h
Radiation section inlet temperature:	291 °C
Radiation Section out temperature:	343 °C
Convection Section steam inlet temperature:	158 °C
Convection Section steam exit temperature:	158 °C

Steam Flow Rate	6 000 kg/h
Steam pressure:	0.55 MPa
Fuel Flow Rate	1 179.2 kg/h
Fire Rate:	11.792 x 10^6 kcal/h
Flue gas exit temperature:	220 °C
Flue gas oxygen content:	5%

The approximate heat recovery estimated by the flue gas exit temperature and the oxygen content is 88 percent. See Section J for a recommendation for adjusting the damper for a more optimum oxygen content.

Naphtha Hydrofinishing Unit Heater #2 (Tag 44860)

The second heater in the hydrofinishing unit has the following surface area:

Radiation Section:	176 m^2
Convection Section:	329 m^2
Steam Coil:	176 m^2

The heater was operated, as observed in July 1991, at the following conditions:

Radiation section flow rate:	304 kg/h
Radiation Section inlet temperature:	248 °C
Radiation Section exit temperature:	252 °C
Convection Section flow rate:	526 m^3/h
Convection section inlet temperature:	220 °C
Convection section exit temperature:	212 °C
Steam flow	5-6 m^3/h
Steam pressure	0.35 MPa
Fuel Type	Natural gas
Flue gas exit temperature	222 °C

The appropriate heat recovery estimated by the flue gas exit temperature and the maximum oxygen content is 88 percent. See Section J for a recommendation for adjusting the damper for a more optimum oxygen content in the flue gas.

Kerosene & Diesel Hydrodesulfurizing Unit (Tag 45583)

The HPM unit heater has the following surface area;

Radiation Section:	318.4 m^2
Convection Section:	1000 m^2
Steam Coil:	621 m^2

The heater was operated, as observed in July 1991, at the following conditions:

Hydrocarbon flow rate:	164 m^3/h
Hydrocarbon inlet temperature:	310 °C
Hydrocarbon exit temperature:	400 °C
Type of Fuel:	Natural gas
Fuel Flow Rate:	45 000 Nm^3/h
Flue gas exit temperature	230 °C
Flue gas oxygen content	5.5 %

The approximate heat recovery, estimated by the flue gas oxygen content and exit temperature, is 88 percent. See Section J for a recommendation for adjusting the damper for a more optimum oxygen content in the flue gas.

3.2 Heat Exchange Trains

The operation monitoring of heat exchanger trains is not adequate. Most heat exchangers have only local bi-metallic thermometers. The exchangers temperatures are often measured only at two points, whereas monitoring of the temperature (and pressure) at four points would give much better data for determining each exchanger operation. Only some of the heat exchangers have thermocouple temperature elements which send the temperature signals to the related control room. There is no special instrumentation which would permit minimizing energy usage by optimizing the heat exchanger trains control.

3.3 Waste Heat Recovery

In general, the refinery uses heat recovery from hot product streams through the use of product to feed exchangers. There are also waste heat boilers used for steam generation.

3.4 Economics of Increasing Surface Area

An increase in crude heat exchanger efficiency, through an increase in surface area, reduced fouling, or improved insulation results in reduced operating costs. At $65 per tonne of fuel oil at design capacity, (at 60 LEI per dollar and refinery costs as of 1 April 1991) and 80 percent fired heater efficiency, each one degree centigrade improvement is worth $28 300 per year. See Appendix G for the calculation basis.

4. STEAM SYSTEM

4.1 Steam Balance and Utilization

The refinery receives its power and net steam from two thermoelectric power stations and one steam only power station: CET-1, CET-2, and CT. Data on these units are shown in Table D.4.1. Steam is utilized at the four nominal pressure levels of 10.0, 3.5, 1.4, and 0.5 MPa. Pressures appeared to vary throughout the facility by as much as 0.2 MPa. The steam supply is, of course, supplemented by waste heat boilers and process steam generated by energy recovery systems throughout the refinery.

The thermoelectric power station includes three steam generating units: CET-1, CET-2, and CT. Data on these units are shown in Table D.4.1.

TABLE D.4.1 - DESIGN BASIS - TWO THERMOELECTRIC POWER STATIONS AND ONE STEAM ONLY STATION

Unit	No. Boilers	Pressure MPa	Flow m^3/hr	Design Basis	Fuel	Percent Blowdown
CET-1	3	4.0	50	USSR-TKTI	oil/gas	5%
	2	4.0	50	Romanian-CR12	oil/gas	5%
	2	4.0	130	USSR-TG	oil/gas	5%
CET-2	3	10.0	120	Romanian C2	oil	5%
CT	6	1.5	105	Romanian CV22	oil	7%

Note:
The steam flow rates for CET-1 (installed in 1956) are less than 70 percent of the design due to the physical condition of the units.

4.2 Selection of Pressure Levels

The nominal pressure and temperature levels used within the refinery are as follows:

	Pressure MPa	Temperature °C
High Pressure Steam	3.5	340
Medium Pressure Steam	1.4	230
Process Steam	1.0	190
Low Pressure Steam	0.45	175
Condensate Steam	0.2	---

Table D.4.2 contains data on selected steam generation pressure and temperature ranges.

TABLE D.4.2 - STEAM GENERATION PRESSURE/TEMPERATURE

Syste m	Pressure, MPa			Temperature, °C		
	Min	Norm	Max	Min	Norm	Max
CET-1	3.7	4.0	4.4	420	450	450
CET-2	9.0	10.0	10.0	500	525	540
CT	1.2	1.5	1.7	290	240	250

4.3 Condensate System

A condensate collection systems is installed throughout the refinery. It was reported that clean condensate return to the power house was on the order of 30 to 40 percent.

There is no dependable dedicated return line for the heat tracing condensate. Currently steam from many of the heat tracing loops is released to the atmosphere. This practice creates intolerably high losses of energy and condensate.

4.4 Insulation

Insulation was said to be applied to the Romanian norm of 60 °C surface temperature.

4.5 Potential effect of Energy Savings Projects to Steam Balance

Putting the FCU CO boiler on line and implementing other steam saving projects should reduce the need to has fire the CO boiler and reduce steam production at the CT power station.

5. HEAT REJECTION SYSTEM

5.1 Cooling Water System

The Petrotel refinery employs a combination of air and water trim cooling services for the plant. The circulating cooling water system employs natural draft hyperbolic cooling towers. Certain problems were evident from oil contamination and leakage impairing the efficiency of the cooling tower / water system due to excessive algae growth and fouling and necessitating periodic high pressure water cleaning of the exchangers.

5.2 Air Coolers

Most air fin coolers were fitted with a Romanian auto variable fan pitch mechanism. Numerous reports stated that these failed to work properly so the fan pitch is fixed manually. The fans are cycled off and on when weather conditions and cooling performance permits.

5.3 Equipment, Piping, and Stream Heat Losses

However, a more significant problem for heat losses appears to be in an improved selection and maintenance of valves and steam traps.

5.4 Recovery Systems

The short time in the refinery did not permit a formal review of this area, however, refer to specific units in Section C and Section D.3.3 for related comments.

5.5 Tracing and Temperature Maintenance Systems

Electric heat tracing is not used. As noted elsewhere, a condensate return line for much of the steam tracing system does not exist and condensate is flashed to the atmosphere.

6.0 USE OF HOT OIL LOOPS

No hot oil loops were noted in our review.

E. MECHANICAL DRIVE SYSTEMS

1. COMPRESSOR DRIVES

1.1 FCCU

The regeneration air compressor in the FCCU is steam turbine driven. The unit is a Pignone-Hitachi; with operating data as follows:

steam flow maximum	30 tonne/h
steam pressure/temperature	3 MPa/325 °C
exhaust pressure	650 mm vacuum

The exhaust vacuum is maintained by two (2) ejectors.

1.2 Hydrotreating Unit

The two-staged hydrogen compressor in the hydrotreating unit is electric motor driven. The unit is a Hitachi-Pignone; operates at 6 kV; 5.6 MW; 3 phase; 50 Hz. The unit has no provision for soft starting.

2. SPECIAL PUMPS

The delayed coking unit employs a high pressure water pump with an electric motor drive; 6 kV; 1.8 MW; 3 phase; 50 Hz; 2984 RPM in decoking service.

3. ELECTRIC MOTORS

The electric motors in the refinery originate from sources all over the world. The maintenance repair shops are capable of re-manufacturing the motors. Electric motors are used for mechanical drives everywhere in the refinery except for the regeneration air compressor drive in the FCC unit and one hydrogen compressor drive in the reformer unit. Steam turbines are used in these applications.

4.0 STEAM TURBINES

See comments in Sections E.1.1 and E.3.

5.0 SPECIAL EQUIPMENT

No special equipment surfaced during the review.

F. MAINTENANCE/MECHANICAL OBSERVATION

1. OVERALL IMPRESSIONS

The maintenance and mechanical engineering department at Petrotel is organized into the following work groupings:

Unit Area

Each process unit area has a mechanical engineer assigned to it. This engineer is responsible for the maintenance and housekeeping for the entire unit. Also, a number of technicians are assigned to the unit, and report to the area engineer for work scheduling. The area engineer also plans the repair and maintenance for scheduled shut-downs, or "turn-arounds". Spare parts are ordered from the refinery's supply. If the part is not available, it may be purchased, or manufactured by other departments, or perhaps a new part may be designed and manufactured, however, the initial demand for items or repair or replacement is made by the area engineer.

Stationary Equipment

The maintenance shops are equipped to manufacture, or repair stationary equipment such as tanks, pressure vessels, valves, pipes, and heat exchangers. The engineering department has the capability to design new stationary equipment. The engineers and draftsmen may also make modifications to the existing equipment. The maintenance shops for stationary equipment work from drawings furnished by the engineering department.

Safety Relief valves are sent to the Maintenance and Repair Shop for Romanian Code compliance repairs and testing.

Dynamic Equipment

The maintenance shops are equipped to manufacture spare parts for dynamic equipment such as pumps, compressors, gear boxes, fans and blowers. The machine tools located in the shop are adequate for refinishing any rotating machinery in the refinery. High speed pumps and compressor impeller shafts are balanced in a special balancing shop.

Materials and Spares

The maintenance department operates a warehouse for all material required, including spare parts. Expendable supplies are also the responsibility of the division.

The organization, management and personnel of the Maintenance and Mechanical Engineering Department, is efficient and effective. However, the refinery's performance is below expectations due to these problem areas:

Lack of Spare Parts

Before the political changes of December of 1989, there was no importation of any material including spare parts from outside of Romania. Consequently, all the spare parts required for the refinery were of necessity domestically manufactured. The material from which parts were made was manufactured internally from Romanian raw stocks.

Inadequate Quality in Materials:

Due to this ban on importation, the materials supplied to the refinery were of a poorer quality than the materials available from outside sources. As an example; the engineering staff designed their own pump seals but due to inferior quality of the materials available, the resultant seals would last for at best one month. Because of the short supply of alloying materials such as chromium and molybdenum, the low alloy steel available proved inferioe. This has resulted in dynamic equipment shaft failures. In some services, these bearings have a short life.

Unscheduled Maintenance:

Due to the failure rate of the dynamic equipment, the refinery is shut down frequently for unscheduled maintenance. The turn-around maintenance schedule has not always been respected due to some unpredicted equipment failures. The need for these repairs has required almost all of the capacity of the maintenance shops.

The housekeeping in the refinery is below standard. There are pieces of equipment in disrepair such as heat exchanger bundles, valves, electric motors, and pipes disconnected and scattered about on all the units. There is no inventory or catalog of this equipment, for which some value could be realized if sold for scrap. All human occupied spaces were found reasonably clean. Weeds and grass are allowed to grow within the process units. This presents a fire hazard when hot weather renders this material combustible.

The insulation and steam traced lines exhibited a maintenance neglect. All units need to be painted.

There are approximately 900 people employed in the mechanical repair shops; plus 50 people in the electrical and 70 people in the instrument repair, for a total of 1 020 personnel.

2. UNIT REVIEW

The Petrotel refinery complex was inspected for applications of energy and environment conservation. The mechanical equipment of the following units were discussed and inspected:

Maintenance and Repair Facilities
Cooling Water Treatment Facilities
Refinery Compressed Air Facilities
Crude Distillation Unit #3
FCC Unit
Coking Unit
Catalytic Reformer #3
Dewaxing Unit
Sulfur Recovery Unit

The following portions of this section of the report covers selected observations regarding mechanical conditions of the equipment from the above units. At the time of inspection the crude distillation unit was being shut down because of a limited crude supply. The only unit operating during the inspection was the Dewaxing Unit.

3. EQUIPMENT CONDITION SUMMARY

3.1 Fired Heaters and Boilers

General Observations

The fired heaters and boilers were originally designed for natural gas fuel. Attempts to convert to heavy oil such as vacuum bottoms have not been totally satisfactory.

Example A: A steam boiler was equipped with oil atomizing nozzles designed by the Maintenance Engineering staff. The atomization was apparently inadequate. The nozzles caused the boiler tubes to become coked with unburned fuel, resulting in a fire that destroyed the boiler. This boiler was being rebuilt at the time of inspection.

Example B: A second steam boiler was equipped to burn vacuum bottoms. This fuel contained as much as 3 wt% sulfur. The flue gas breaching was not insulated, causing sulfur vapor to condense and corrode the breaching to the extent that the breaching was practically destroyed. This boiler was in service at the time of the inspection.

For natural or other gas firing, furnace volumes are reduced because of smaller volumes to burn gas completely than is the case for a liquid fuel. This may be particularly true for boiler furnaces. As the result, even with perfect atomization, liquid fuel firing in the same furnaces is only practical at reduced capacities.

Process Heaters

The process heaters at the Petrotel refinery are fired primarily with natural gas. The air / fuel ratio is manually set by reducing the oxygen content in the flue gas to 7% or less. The fuel flow rate or quantity total is not measured in most cases.

Table F.3.1.1 illustrates the typical process heater operation. Refer also to Section D.3.1 for additional data.

TABLE F.3.1.1 - PROCESS HEATER OPERATION

Tag Number	Unit	Type of Fuel	Area (m²)			Flow kg/h	Temperature		Steam		Flue Gas	
			Rad	Conv	Steam		In °C	Out °C	tonnes/hr	MPa	% Oxygen	Temp °C
---	Cat Reformer	Gas	21	32	32	22 162 200	138 502	246 543	18	4.3	5-7	220
---	Cat Reformer	Gas	26	32	32	22 162 200	138 479	246 543	18	4.3	4.6-7	220
---	Cat Reformer	Gas	206	157	157	153 910	247	267		4.3	4.2-6	222
---	Cat Reformer	Gas	26	58	58	22 162 200	138 453	246 543	18	4.3	4.8-7	220
46169	Cat Cracker	Oil	580	426	---	140	184	397	---	---	---	---
45179	Delay Coker	Oil	890	870	1 230	118 000	230 370	370 490	6.8	4.0	---	400
44323	Crude #3	Gas	740	1 182	110	194 500	196	336	6	0.35	4	200
45449	Crude #3	Gas	NA	NA	No	NA	320	426	---	---	4	200
44322	Crude #3	Gas	740	1 182	110	194 500	196	336	6	0.35	4	200
44583	Naphtha Hydrofinisher	Gas	318	1 000	621	142 680	310	400	7	1.6	5.5	210/230
44860	Air Heater Hydrofinisher	Gas	176	329	(air) 176	304 000	248 220	252 712	(air) 6.5 kg/hr	(air) 0.1	3 416	222
44861	Naphtha Hydrofinisher	Gas	394	285	285	6 000	158	343	6	0.55	3.615	220

3.2 Vessels

Storage Tanks

The storage tanks at Petrotel, Teleajen, are of mixed design ranging from early 1940 to the recent time. Tank venting and breathing is directed to the atmosphere without vapor recovery.

Pressure Vessels

The integrity of the pressure containments was adequate.

3.3 Heat Exchangers

The crude Unit #3 exhibited some tube failures in the exchangers. The cooling water was contaminated with crude oil. A plan to identify the offending unit was implemented, however, the water was so contaminated that the sample from any of the heat exchangers would show oil. This nullifies the usual practice of taking exit samples and examining them for oil.

3.4 Rotary Equipment

Pumps

The pumps in the Petrotel Refinery are from several sources, including U.S. designed (Worthington). The Maintenance Engineering Department has designed and built seals of the materials available in Romania. The life of these seals is not adequate.

Example: In Distillation Unit #3 a French built pump, Gainard, requires a seal change every 4 to 6 weeks.

Compressors

Refinery Utility Air

The utility air in the Petrotel Refinery is supplied by several compressor installations in various units of the refinery. One typical installation was inspected on July 23, 1991. The compressors were not operating and one unit was disassembled for repair. Air was being supplied from other sources.

Typically, utility air is supplied by three British Broom-Wade VMHD500. The instrument air is dried by electrically regenerated silica-gel vessels. The compressors are belt driven. There are no spare belts available.

FCC Regeneration Air Compressors

The FCC Unit Air Compressor is a Hibachi-Pignone with a 3 650 RPM steam turbine driver, flowing 60 000 Nm^3/h, compressing to .17 MPa absolute. The steam turbine operates on 3' 5 °C, 3 MPa steam, 30 tonne/h maximum steam rate, condensing exhaust at 650 mm.

Hydrofinishing Hydrogen Compressor

The Hydrogen Gas Compressor is a Hibachi-Pignone with a 5.6 MW 6 KV electric motor drive. It is 2-stage and intercooled by 2 shell and tube exchangers in parallel. Inadequate cooling of this flow forms the bottleneck of the plant. The installation has space for installing an air fan cooler, but none is available.

3.5 Specialty Items

Fan Cooled Units

All fan cooled units at Petrotel are manually adjusted for blade pitch and louvre opening. Winter operation is accomplished by shut down of the fan motors.

Cooling Towers

The cooling towers are natural draft hyperbolic design with winter doors. The packing is fragile asbestos corrugated sheet.

The cooling water is contaminated with hydrocarbons. The cooling water source is from 34 deep wells and from a natural lake north of the refinery. Since the last earth quake some half of the deep wells have been inoperative.

3.6 Piping and Valves

The piping in the vacuum pump room of the Dewaxing Unit was vibrating excessively. The supports had broken loose and the pipe was deflecting with each stroke of the vacuum pump.

Steam valves need better steam packing and bonnet seals. Many of the steam traps have almost completely failed. Under the plant steam condition this seal is inadequate for long life and/or reliability. It is necessary to make regular careful inspections and to replace the failed traps.

3.7 Instrumentation

General

The refinery instrumentation is mostly explosion proof. However, in the locations roughly equivalent to area Class I, Division 1, Group B, Zone C intrinsically safe instruments and intrinsically safe field instruments are color coded.

General type instrumentation - transmitters, indicators, recorders, controllers, functional converters, etc. is mostly domestic. Most process units have electronic field and panel mounted instrumentation. Some units are still controlled with pneumatic instruments or with a combination of electronic and pneumatic instruments. Pneumatic instruments are also made in Romania.

Control valves

The Petrotel Refinery is mostly equipped with domestically produced control valves that were manufactured on license agreement with Goulde (Germany). Most of the refinery installed Romanian - made control valves (90%) are dual port valves. Single port valves are installed only in services where tight shut off is required. About half of the valves do not have positioners. The other control valves are Masoneilan, Honeywell and Soviet made valves. Most of the valves were found to be in working condition, although some valves had developed leaks at the flanged connections. Valves are repaired in the refinery's own shops. However, it is possible that the accuracy of the repair of the valve plugs and seats is adequate at all times to retain the valve characteristics and shutoff tightness. It is definite, however, that the pressure reducing valves on the steam desuperheating stations have developed significant leakage, up to five percent of the maximum capacity of each particular valve. Generally considering the present technological conditions in the refinery, the control valves are not a major factor in improving efficiency and reducing pollution in the refinery.

Control rooms and panel instrumentation

The control rooms are spacious. The panels in the control rooms are generally full graphic panels. There are no Distributed Control Systems (DCS), no Programmed Logic Controllers (PLC) and no automatic data acquisition and logging have been installed. Data logging is manual, based on a visual reading from panel instruments.

The general control instrumentation - indicators, recorders, controllers (pneumatic and electronic) are mostly Romanian made.

It was noted that paper and ink on the recording instruments were of poor quality.

Most control rooms have windows overlooking the related units. The glass panes are not shatter proof, which can be a safety hazard. Quite a few control rooms are located in areas which would be classified Class I, Division 2 (hazardous under abnormal / operating conditions) in the U.S. Respectively, these control rooms had been designed as pressurized and air conditioned rooms.

Two serious problems are related to the uninterruptible power supplies for the electronic instrumentation. The first problem is caused by the frequent instability in the Romanian national power grid. The frequency drifts between a nominal frequency of 50Hz and 48Hz, and seldom reaches 50 Hz. This problem is being studied and there is planning to improve the situation. A second problem is caused by the emergency power supply batteries. The batteries will no longer hold the designed electric charge and need to be replaced in several control rooms. Also, the battery rooms need to be improved.

Flow measurements

In the refinery, flow measurements are made by means of orifice plates and differential pressure (dP) transmitters. Most of the flow signals are recorded on a square root strip chart. Although there are square root extractors in some of the loops, and some loops have integrating counters, it is still quite common for the refinery to totalize flows by using a flow strip chart recording and graphically integrating the recorded trace by means of planimeter. Usually, no compensation for the temperature of the stream is made for the flow loops. These kinds of flow measurements, especially the computing of the totalized quantities by a planimeter, are not adequate for making accurate mass and energy balances. This significantly reduces the accuracy and value of the analysis of losses.

The refinery has some positive displacement meters, they are mostly installed on finished product lines. In order to analyze losses and the efficiency of operation of each unit, to improve material and energy accounting and to improve refinery optimization many more flow measuring instruments, especially high accuracy flow measuring and totalizing instruments will be required. All of these additional precision flow measuring instruments will need to be supported with adequate maintenance and calibration if the desired benefits are to be realized.

Instrument air supply

The quality of instrument air is below recognized standards. The dew point is sometimes above the desired value of -40 °C. This humidity in the instrument air creates instrument problems with the field instruments and with freezing occurring in the winter.

Weigh stations

The refinery has the following weigh stations for railway tank-cars and for trucks:

Weigh Station #1. - (Mechanical parts are from Germany, digital sensors from Italy). Light and heavy oil products. Tank - car weighing. Four rail trucks. Accuracy ± 0.05%.
Weigh Station #2. - (Manufacturer is undefined). Truck weighing.
Weigh Station #3. - LPG. Tank - car weighing. Four rail tracks. Accuracy ± 0.1%.

Future planning

The Instrumentation Department has preliminary plans for modernization. There are several reasons for this, including insufficient hard currency funding, which at present preclude such planning. However, it is suggested that the following items could be analyzed, studied and prioritized.

1. Instrumentation upgrading
2. Installation of DCS
3. Control room improvement
4. Implementation of advanced control strategies
5. Development and implementation of information systems' applications (database, process simulation, linear programming, inventory control, maintenance scheduling, etc.
6. Accurate measurements of process stream flows and energy usage for each unit and computerized mass and energy balances.
7. Office computerization - The refinery has recently purchased twenty IBM AT compatible computers. The refinery engineers have just started to learn how to operate these computers. However, the refinery does not have modern software. The refinery needs to be supplied with a spreadsheet program such as Lotus 123 or its equal, a database program, such as dBase II or dBase III and a modern word processor program such as Wordperfect or its equal.

See Appendix C. for further information on instrument spare parts, problems, on-line and lab analyzers, calibration and maintenance and custody transfer.

Advanced Controls

The implementation of DCS to control the process units is the fastest and most cost effective way for Petrotel to bring its unit's process control up to U.S. and Western European standards.

With the implementation of distributed control systems (DCS) on their process units, the opportunity for a greatly increased use of advanced controls and stratagems dawned for US refineries. It became apparent to many of these refineries that the increased profits from advanced controls would quickly payout on analog instrumented process units, the costs of a DCS and the advanced controls. One US major decided to convert all its refinery process controls to DCS; their experience was that it normally took four (4) to twelve (12) months of the new control's operations to recover the DCS / Advanced control costs for almost all units.

With the implementation of DCS, the following unit advanced controls should be considered:

- Crude Units
  - Decoupling the side draws - This control allows the board operator to increase / decrease a product draw (changing that product's IBP and EBP) without upsetting the other product sidedraws.
  - Cutpoint calculation - This control replaces an expensive high maintenance analyzer. Calculating and inferring boiling point measurements such as 95% point from tower measurements. This measurement can then be used for tower control.
  - Pumparound control - This control looks at the pumparound flows, temperature, energy use and heat transfer and determines the economics of increasing / decreasing pumparound to increase / decrease products flow.
- Reformer Units
  - Reactor optimization - Controls reactor temperatures to optimize the catalyst life vs octane number output.
  - Prefractionator control - Sharpens fractionation so as to minimize catalyst poisoning heavy ends and non-retractable light components in the reactor feed, thereby increasing the reformer's octane barrel output.
- Hydrogen Desulfurizers
  - Hydrogen control - Ratio hydrogen to feed to smooth flow, enhance the desulfurization reaction and extend catalyst life.
- Furnace / Heaters
  - Furnace air control - Regulate the combustion air to minimize excess air and prevent smoke formation.

When starting an advance control project, a 'process audit' covering those areas that the advance controls will impact, needs to be made. This audit should show all pertinent data such as flows, process conditions, energy usage, product quality and stream values. This establishes the baseline. Later, normally three (3) to four (4) months after implementation of the advanced controls a final process audit needs to be taken. This audit collects the same data that was taken for the starting audit. With the data from the two audits, a final report can be issued showing the actual savings vs the estimate savings and reasons for any differences. Besides establishing credibility for the project estimate and payouts, it also provides the feedback necessary to improve future estimating.

Some ideal members of this final audit team are the advanced control engineer, the process unit operations engineer and one of the consulting engineers, if used. With the high degree of savings seen on advance control projects, there is usually a push for their rapid implementation. This push, plus a lack of availability makes it prudent to hire outside expertise, i.e. consultant. This an opportunity to upgrade the facilities staff expertise. A staff advanced control engineer should be assigned to work with and monitor the consultant. On later projects, this will allow more (or sometimes all) of the same type of work to be done in-house.

3.8 Electrical Equipment

Service entrance

Alternate power is supplied to the Petrotel refinery from the National Grid (power station is owned by Petrotel). The power station is located within the refinery. Two overhead 110 kV lines provides power to two main transformers.

Each transformer, 40 MVA, 110 kV primary and 6 kV secondary, provides medium voltage for 6 kV drives, and power distribution to the unit substations. The electrical system (National Grid) at the Petrotel S.A. Refinery has been very stable and reliable. During the past five years the refinery works has not experienced a power outage. No power factor correction, at the present time, is employed at the refinery. Calculated power factor in June equaled 0.88.

Engineering documentation has been completed for installation of a 6.6 MVAr capacitor bank at the 110/ 6 kV main substation. After installation of new capacitor bank the power factor should be about 0.95.

Main substation

The main substation, and the equipment in the electrical control room was manufactured in Romania. The equipment is old, with aluminum bus. Only the circuit breakers are imported (Brown Boveri). There were signs of fire in the main substation room (black ceiling, walls and peeled off paint on the face of the substation).

Grounding system

The resistance of the electrical ground grid, the equipment grounding and the lightning protection are in accordance with the Romanian national code. Grounding resistance is periodically checked and is presently better than code requirements.

Electric power consumption

Energy meters at the 110 kV level for active and reactive power are located at the refinery's main transformers.

Energy prices as of July 1990

- Active power at peak demand (between 1700 and 2200 hours) at 4.359 Lei/kWh
- Active power at non peak hours - 1.643 Lei/kWh
- Reactive power - 0.234 Lei/KVArh

See tabulations in Appendix F. for electrical energy consumption from June 1990 through May 1991, Table AP-D.2.

Power distribution and feeders

Power at the 6 kV level is distributed between the main substation and the unit substation by cables routed 85% underground and 15% in cable trays. Each unit substation is fed two by two separate feeders, each designed to withstand 100% load. All cables are domestic.

Transformers

All 6 kV to 0.4 kV transformers are oil filled and manufactured in Romania. Oil spots were observed from leaking transformers.

Unit substations

All of the 6 kV unit substations were manufactured in Romania. They are currently in fair condition. See Appendix D for a listing of the substations with their transformer's ratings, Tables AP-D.3.a, AP-D.3.b, and AP-D.3.c.

Lighting system

The Lighting system operates at 220 V AC. Emergency lighting operates at 220 V DC. There are no building exit signs at the refinery.

The Process units lighting is mixed:
- 50% Mercury
- 50% Incandescent

The Road Lighting:
- 65% Mercury
- 35% Fluorescent

The control Room and Offices: Fluorescent

As a general observation, the lighting system can be described as inadequate. About 75% of the bulbs in the fixtures in the refinery are missing. Lights are switched manually.

Power houses

Power House No. 1

The power station No. 1 is equipped with three turbogenerators:

- Two were made in the USSR (1954), a type AP 6-11 turbine driving a type T2-6-2 generator.
- The third generator was manufactured in Romania (1989).

The generators nominal characteristics:

Power: 6 MW, 7.5 MVA
Voltage: 6.3 kV
RPM: 3,000
Excitation: 127 V, 232 A

Power House No. 2

The power station No. 2 is equipped with three turbogenerators made in the USSR, (1976) type P.R. 12 turbine driving a type T2-12-12 generator.

The generators nominal characteristics:

Power: 12 MW, 15 MVA
Voltage: 6.3 kV
RPM: 3,000
Excitation: 193 V, 240 A

Energy production / consumption

The turbines are back pressured and some have extraction. The production of electric power is determined by the steam consumption of the refinery.

During the winter time, when the steam consumption is at its maximum, so is the electric power. Then 90% of the refinery's electric power consumption is met by the refinery generators. During the summer time about 80% of the plant load is furnished by its own generators.

Motor control centers

The motor control centers are mainly of domestic manufacture. They are presently in fair condition.

Motor feeders and control cables

All motor power feeders and control circuits to the local push button stations are cables (manufactured in Romania) routed underground and / or in cable trays. The cables are in fair condition, but the cable trays are rusted.

Motors and push button stations

About 85% of motors were manufactured in Romania. The remaining 15% are of USSR and German manufacture. Each motor has a local push button station equipped with:

- Start button
- Stop button
- Ammeter (15 kW and above)

The local stations are mainly of domestic manufacture except at the reformer where AEG stations are used. The motors and local stations are in fair condition.

Stationary battery

One of the main problems at the Petrotel S.A. Refinery is lack of adequate DC power. The present stationary batteries are very old, the system is now inadequate and must be replaced if the systems using the DC power are to function. The following station battery systems are required:

Volt DC	Ampere Hours	Number of Systems
220	72	1
220	108	3
220	216	6
220	288	1
220	360	1
24	432	1

Freeze protection and maintained temperature

Steam is used for all process and utility lines requiring freeze protection or a maintained temperature. No electrical tracing is used at refinery.

Staff in the Electrical Department

Shift Operators (4 shifts x 22)	88
Maintenance and Repair (day shift)	37
Electric Work Shop	48
Total	173

Electrical Buildings and Rooms

Poor construction, material, earthquakes and / or explosions at the refinery has led to cracks in the building and caused leaking roofs, broken windows, etc.

The electrical rooms are wet and messy (a disorderly accumulation of spare and broken parts). Sheets of plastic are being used to protect the motor control centers from leaking roofs. There was also a leaking roof in the power house control room. No lighting was observed in the rear of the power house control panel. Another concern is the presence of rats and cable failure due to their chewing of insulation.

3.9 Corrosion

The most serious items of corrosion in the refinery was exhibited in the power boiler breaching. One power boiler had burners converted from gas to heavy oil. The heavy fuel oil contained approximately 4 ½ % sulfur. Since the breaching was not insulated the flue gas cooled to below the dew point thereby condensing water, which along with the sulphur dioxide in the gasses formed sulfurous acid. This corrosive moisture attacked the unprotected metals in the breaching.

Other seriously corroded equipment was exhibited in the sulfur recovery unit, namely the Claus furnace and the sulfur storage vessel. This unit had not been operated for 2 to 3 years.

3.10 Insulation Condition

The insulation appeared adequate for the areas where insulation was yet installed. All units exhibited places where insulation had been removed and not replaced.

The De-Waxing Unit was using mineral wool for cold insulation which was impregnated with water and frozen in many places. Closed cell urethane insulation would serve this application far better. See also Section F.3.5.

3.11 Special Equipment

Flares

Visual observations of flares at the Petrotel Refinery showed that the flares are almost constantly burning and producing a significant amount of smoke. There is no automatic control of the steam admitted to flares. The steam flow is adjusted manually from a nearby control room based on the amount of smoke in the flare flame. The flow of flare gases is not measured, and the chemical composition is not analyzed.

A television camera, pointed at the flare, with a receiver in the control room to is monitoring the flare would help to reduce smoke emissions while still conserving steam.

Tank farm management

The tank farm has between 100 and 120 atmospheric tanks available for the storage of various products. Levels in the tanks are monitored by an ENRAF "Nonius" system (The Netherlands) accuracy ± 1.0 mm. The tanks are divided into five groups. The level data is multiplexed and transmitted to a dedicated control room. Temperature in the tanks is not measured. An operator can retrieve a specific tank level measurement for use at a keyboard. The tank loading and unloading is done manually. This system presently has operating problems. The LPG tank farm has 35 spheres for the storage of light ends.

4. MAINTENANCE POLICY, PRACTICES, AND HISTORY

See Section F.1, Overall Impressions.

G. ENERGY LOSS MONITORING SYSTEM

The Petrotel refinery incorporates a comprehensive system of process stream and utility metering. This system is not fully implemented on an individual unit or major equipment basis. To decrease the losses reported for operations, a Loss Control Committee should be set up. Its responsibilities could also be readily extended to energy auditing. Metering accuracy is an essential aspect for reliable loss control. The adequacy of the utility metering could be checked and reconfirmed by the committee.

Also needed are more reliable oxygen analyzers to measure the oxygen in furnace / heater flue gas. An "in situ" type oxygen analyzer, such as "Zirtek", where the measuring cell is placed in the firebox, should provide the accuracy and reliability needed. It will also provide high and low alarms and, most of all, a reliable signal for an advance furnace control and monitoring system.

Petrotel is planning to computerize the gathering of data from the process units. The measurements for a reliable energy use database are for all intents either already in the system or easily added to it. These data needs to be extracted from the system in a meaningful, timely manner. Energy uses and losses and significant energy trends can then be identified, and programs can be established to minimize losses.

Monitoring should allow process-unit accounting for energy use on a calendar basis. Accountability for the efficient usage of the refinery energy then needs to be established, so that goals to reduce energy use can be set and monitored.

In summary, the data obtained and equipment installed can be used to identify energy loss problems, energy use charges and energy usage trends. It can also be available for energy minimization advanced controls.

H. FUEL SWITCHING/UTILIZATION

1. REFINERY FUEL SYSTEM

Refer to Section B.2 for data relating to the fuel system.

2. GENERAL REVIEW OF POTENTIAL REFINERY USE FOR COAL

The availability of native coal makes a review of coal as an energy source of interest to the national economy. A study on the use of coal as an adjunct or substitute for hydrocarbon fuel streams is, therefore, included in this evaluation.

The refining of crude petroleum in the USA typically requires 380 000 BTU per barrel (crude feed) of fired fuel. Heat is provided by burning a variety of fuels in directly fired heaters. Generally the fuels are a collection of effluent streams in both gaseous and liquid forms from the various operations around the refinery complex.

Coal is frequently used in industry as a fuel source. Generally it is used on large capacity boiler units. There are significant base investment and operating costs and activities associated with feed and ash handling equipment, sulfur removal, etc. that can be charged out over large installations but prove too inhibitive in the economics of small units.

There are many ways to utilize coal as a fuel. Those most applicable to the situation at hand are discussed below. The first two, direct coal firing and coal gasification, are discussed in some detail. Several others, such as coal liquefaction, coal-oil mixtures, coal fired gas turbines are touched upon briefly.

The use of coal in the existing refinery process heaters would most likely be restricted to one of the methods in which a product fuel can be produced in one location and piped to the various users. Plot space in the vicinity of the existing furnaces along with safety considerations typically does not allow for coal and ash storage and handling facilities within the refinery processing area. Also existing equipment is not designed for the particulate loading experienced in the flue gas with coal firing. In addition, any required sulfur removal equipment would have to deal with flue gas clean-up on an individual process heater basis if there were not a central coal processing facility.

The entire refinery energy and equipment picture dictates if coal could be incorporated into the refinery as a acceptable energy source. If a new process heater or utility boiler would be needed and the fuel balance allows for another fuel source, then the use of coal may be justified and the new coal technologies would be worth looking at. If the residual fuel picture changes because of modifications to the refinery, coal usage may be justified.

2.1 Direct Coal Firing

Coal usage is not a simple thing anymore. Gone are the days of stoking the fire by shovelful of run-of-mine coal and just letting it burn. Coal may need to go through physical cleaning, sizing, and drying just to get it to the furnace. Burners are specially designed to achieve optimum efficiency and low nitrogen oxide emissions. Additives are injected to reduce ash sticking to heater tube walls, reduce sulfur dioxide in the flue gas, etc. Flue gas may be subjected to further treatment such as wet scrubbing to reduce sulfur dioxide to meet tighter levels of environmental acceptance.

Traveling grate burners bring the coal automatically to the burning chamber where the coal is burned. Coal with a moisture content much above 30 percent must be dried before burning, so lignite/brown coals would most likely need pre-combustion drying. Hot under grate air can be used for this purpose. Ash builds up on the grate until it drops into a hopper. The ash is later removed from the hopper. Sulfur, however, must typically be dealt with after combustion where it is removed as sulfur oxides. Add- on sulfur dioxide removal equipment adds significantly to the cost of a unit.

Modern direct coal burning systems include atmospheric and pressurized fluidized bed combustion (AFBC and PFBC) units that provide for gas burning, clean-up, and heat recovery all in one unit. Limestone is used as part of the fluidizing medium and the calcium present in it reacts with the sulfur dioxide before it is able to escape from the combustion chamber. The result is a non-toxic disposable by-product.

FBC technology is applicable to a wide variety of fuels including a wide range of coals, residual oil, and petroleum coke. AFBC technology for boilers is available commercially from a large number of licensors, while PFBC technology is still considered to be in the development stages. The application of FBC technology to a process heater may be possible, but it would require extensive pilot test runs and special considerations in equipment design.

2.2 Coal Gasification

Coal gasification has been utilized for a long time and there are several companies (Texaco, Lurgi, IGT, KRW) that have commercialized processes. The products from the gasification, hydrogen carbon monoxide, carbon dioxide, and others, can be used as a chemical feedstock or a fuel gas. To produce a fuel gas of medium range heating value (9.3 - 18.6 Mj/m^3 or 250 - 500 Btu/SCF) suitable for burning in a process heater, oxygen must be used in the gasification. Because of the reducing conditions present in the gasifiers, most of the sulfur in the coal is converted to hydrogen sulfide. Hydrogen sulfide can be removed from the gas stream by using a number of available processes. In addition, it can be turned into elemental sulfur.

Development work is being done for in-situ desulfurization in a fluidized bed coal gasifier. This process is much the same as the PFBC except that the product is a gas with a heating value instead of combustion product gases. It is also similar to the FBC technology in that it can utilize a wide variety of fuels, such as the sour residual oil produced within the refinery.

Fuel gas produced in this way can be piped into a plant fuel header and used anywhere around the facility. The attractiveness of this option is that the coal usage would be in one central location, while the fuel users could be in many different locations.

Another possible use of the gas produced via gasification could be as a fuel for a gas turbine. The gas turbine could be used to generate electricity or to provide a direct large capacity mechanical drive such as a compressor. The thermal efficiency of a gas turbine is typically raised by using the turbine exhaust gas to raise steam in a waste heat boiler in a co-generation process.

2.3 Other Technologies

<u>Coal liquefaction</u>

Production of liquid fuels from coal can be either indirect or direct. In indirect liquefaction, the synthesis gas produced in a gasification step is further reacted to produce a readily burnable fuel (i.e., via the Fischer Tropsch process to naphtha, diesel and waxes or via syngas to methanol to gasoline). Since the gasification product would be an adequate fuel for the heaters in the refinery, there would be no need to go beyond that step to liquid fuels.

Direct liquefaction producing a Number 2 type fuel oil would be more applicable to the fuel needs in the refinery. Several processes have been developed since the 1960s including H-Coal, SRC-I, Exxon Donor Solvent, and SRC-II (in the USA). The high cost and inefficiency associated with these processes led to the cutback of further development of the technologies as they stood. The early processes have been modified and further developed by the United States Department of Energy (US DOE) and industrial partners into two-stage liquefaction processes. These processes are still not available on a large commercial scale. Estimates are that the cost of a barrel of oil produced by coal liquefaction using such methods might approach $25 per barrel by the late-1990s.

Coal oil / water mixtures

The use of coal slurried with oil or water to produce a usable fuel is also the subject of numerous studies and optimizations. There are even annual conferences on "Coal & Slurry Technology" sponsored by the Coal & Slurry Technology Association and the U.S. DOE's Pittsburgh Energy Technology Center (PETC). Coal water mixtures can be prepared with up to 70 percent solids, while current technologies and pilot plant results show coal oil mixtures are limited to 30 to 50 percent solids. Coal-oil mixtures could be prepared in one location and pumped around the plant to the various process heaters, however, emissions in terms of sulfur dioxide, NO_x and particulates would be a problem at each furnace.

Coal-fired gas turbines

Direct coal-fired gas turbines are being developed and improved by General Electric, Westinghouse, and United Technologies. The use of gas turbines in this manner on the refinery would most likely be restricted to electricity generation. Solids and impurities deposition on blades and casings would likely require frequent cleaning and duplication of equipment to keep an optimal amount of equipment "on-line". Environmental control requirements would also likely limit the application of this technology to high quality coals.

Fuel cells

The combination of coal gasification and emerging fuel cell technology presents an attractive high efficiency electrical and heat energy generation possibility. Current projections, based on work sponsored by the US DOE, indicate an efficiency level between 45 and 55 percent in converting hydrocarbons directly to electricity. The hydrogen and carbon monoxide rich fuel from coal gasification is suited to fuel cell use, with carbon dioxide used in the cathode side of the cell.

Of the four major fuel cell technologies, two are worthy of mention here - phosphoric acid and molten carbonate. Phosphoric acid fuel cells are at a more advanced state; however, they operate in the range of 200 °C compared to molten carbonate cells that operate at 650 °C.

The molten carbonate fuel cell is best suited for use with coal gasification in applications where good quality heat is needed. The exhaust gas temperature of 650 °C is useful in the generation of high quality steam for process purposes. The use of bottoming cycles further enhances the system.

Overall efficiencies including electrical and recovery of exhaust gas heat to generate steam are in the order of 80 percent. The US DOE is sponsoring sub-megawatt tests of commercial sized units. These tests are scheduled for the 1993 calendar year. While the technology is not ready for commercial use, it is potentially attractive and should be watched closely.

3. COAL AT THE PETROTEL REFINERY

3.1 Availability and Characteristics of Coal

Currently, coal is not used at the refinery. Data on coal used in Romania is contained in the Characterization Report.

3.2 Potential for Use

Modifications to equipment and/or the space required for coal handling, flue gas desulfurization, etc., will require a major capital investment. This will probably not occur in the near future.

3.3 Economics of Use

New coal burning furnaces are not an attractive alternative for the Petrotel refinery at this time due to the high capital cost and space requirements for coal use.

BIBLIOGRAPHY

Cooper, B. R., & Ellingson, W. A. (1984). The Science and Technology of Coal and Coal Utilization. New York: Plenum Press.

R. Dellefield (personal communication, July 19, 1991). Morgantown Technology Center, United States Department of Energy. Morgantown, West Virginia.

Engineering & Economics Research, Inc., Hagler, Bailly & Co.,Inc., PEI Associates Inc., Spaite, P. W. (Eds.). (1986). Emerging Clean Coal Technologies. Park Ridge, NJ: Noyes Data Corporation.

Ekmann, J. M. (personal communication. July 15, 1991). Coal Combustion Division, Pittsburgh Energy Technology Center, United States Department of Energy. Pittsburgh, Pennsylvania.

Feldkirchner, H. (personal communication, July 11, 1991). Institute of Gas Technology. Chicago, Illinois.

Lord, N. W., Ouellette, R. P., Farah, O. G., & Cheremisinoff, P. N. (1982). Coal-Oil Mixture Technology. Ann Arbor, Michigan: Ann Arbor Science Publishers.

McGurl, G. V. (1990, March). Two-stage liquefaction of coal. PETC Review. Pittsburgh, Pennsylvania: Pittsburgh Energy Technology Center.

Podolski, W. F. (personal communication .July 19,1991). Chemical Technology Division. Argonne National Laboratory. Argonne, Illinois.

Scowden, J. (personal communication July 15, 1991). Detroit Stoker. Monroe, Michigan.

Stauffer, C. (personal communication July 11, 1991) Process Sales Company. Houston, Texas.

Vander Molen, R. H. (personal communication July 19, 1991). Combustion Power Company. Menlo Park, California.

I. REFINERY EMISSIONS

1.1 Refinery Sulfur Balance

Currently there is no sulfur recovery system working. Based upon a 1990, production rate of imported crude at 2 050 000 tonnes of 1.9 wt% sulfur (average) and 1 100 000 tonnes of 0.3 wt% sulfur domestic crude, the sulfur balance would be:

Sulfur to refinery	42 250 tonnes/y
Sulfur to fuel oil/product (as reported)	27 800 tonnes/y
Sulfur released to Atmosphere (by Diff)	14 450 tonnes/y

The fuel oil consumed in the refinery was 280 000 tonnes at 3% sulfur. The distribution of the fuel oil was 200 000 tonnes to the power plant and 80 000 tonnes to the process heaters. Both convert the sulfur to sulfur dioxide. The sulfur dioxide emission is 28 900 tonnes/y.

If the Amine System and the Claus unit were working the amount of sulfur recovered would have been 6 000 tonnes. This would have reduced the sulfur oxide emissions by 12 000 tonnes per year or the estimated plant emission would be 16 900 tonnes of sulfur dioxide per year.

Therefore, if the refinery continues to import crude with an average sulfur content of 1.9%, additional sulfur control must be considered.

The options to reduce the sulfur oxide emissions are:

- Alternate low sulfur fuel - natural gas.
- Additional fuel oil desulfurization.
- Flue gas desulfurization - at least at the power plant.

The plant does ship sodium sulfite liquor that reduces the sulfur loss by 20.9 tonnes/y.

1.2 Air Emissions

The refinery does not have any data relative to air emissions other than the sulfur balance. By visual observation it is evident that a significant amount of hydrocarbons are emitted to the atmosphere. Some observations:

- No conservation valves on tanks
- Oil on the ground around:
  - Tank farms
  - Railroad load.unloading yard
  - Roadways
  - WWTP
    - Equalization tanks
    - Sludge pits-on and off-site
    - Oil / water separator
    - DAF tanks
    - Aeration units
    - Clarifiers
- Excessive flaring from the process units.

A visual observation is not sufficient to determine the amount of emission or the program of emission reduction. It was reported by the process evaluation that 3-5 wt% of the feed stock is lost by various routs. This is an excessive loss.

Therefore it is recommended that a portable air monitor, volatile organic (VOC) analyzer, be provided to the refinery. The refinery could then determine the approximate VOC concentrations at the various locations though out the plant. With these data, a logical program of VOC reduction could be developed.

Also, since no data were available for the nitrogen oxide or carbon monoxide emission rates from the boilers or fired heaters, it is recommended that a portable stack gas analyzer be provided. Again the plant could conduct tests on all of the fired units to determine the nitrogen oxide and carbon monoxide emission rates. With these data two actions could be taken. First is to adjust the combustion air to minimize the amount of nitrogen oxide / carbon monoxide. A balance must be made because both can not be minimized by air control, i.e. minimizing the nitrogen oxide will increase the carbon monoxide. For those units that still emit excessive nitrogen oxide / carbon monoxide, a plan to replace the existing burners with low-nitrogen oxide burners could be developed.

1.3 Water Quality

The refinery has two discharges - one to the Teleajen River and one to a district waste water treatment plant.

The data for the discharge to the Teleajen River is shown in Table I.1.3.1

Table I.1.3.1 - DISCHARGE WATER QUALITY - TO TELEAJEN RIVER

Unit	Standards	Actual*
pH	6.5-8.5	7.5
Oil, mg/l	8	34.3
Suspended Solids mg/l	40	38
Total sulfur	4	1.2
COD (mg/l as MnO_4)	100	82
BOD mg/l	35	25

* The average for July 1991 at a throughput rate of less than 50% of capacity.

Table I.1.3.2 contains data for the discharge to the district waste water treatment plant - Corlatesti:

Table I.1.3.2 - DISCHARGE WATER QUALITY - CORLATESTI TREATMENT PLANT

Unit	Standard	Actual*
pH	6.0-8.5	7.0
Oil mg/l	200	250
Total sulfur	25	6.8
Suspended Solids mg/l	160	40.8

* The average for July 1991 at a throughput rate of less than 50% of capacity.

It was stated when the refinery is operating near design capacity the water quality deteriorates significantly. This is why the refinery plant has developed plans to expand the waste water treatment plant. Currently there are no funds to construct the expansion.

The ground water under the refinery is contaminated. A ground water survey was started in 1980 by installing numerous ground water sampling wells. In 1981 a series of 30 ground water extraction wells were installed to intercept the contaminated ground water. The contaminated ground water is treated before discharging to the Teleajan River.

The area of ground water contamination is monitored periodically. The area continued to decrease in size until the earthquake of 1989. Following the quake the area of contamination increased and three new areas were contaminated due to underground pipeline breaks. Some wells also had to be replaced.

It was reported that it will take about 20 years to clean up the ground water. It is doubtful the ground water can be cleaned up until the contaminated soil around the refinery is removed and cleaned up. Any rainwater percolating through the oily soil will add to the ground water pollution.

At the present rate of activity, no soil clean up and pumping only, the plant appears to be preventing the migration of the contamination further off-site. Hence the problem appears to be contained.

See also Appendix G for oil loss calculation basis.

1.4 Solid Wastes

The estimate of the solid wastes collected and disposed is biased because of the numercus treatment units not operating as designed.

Table I.1.4.1 shows the solid waste estimate based upon the actual current operations.

TABLE I.1.4.1. - SOLID WASTE ESTIMATE

Type of Solid Waste	Est. Quantity	Disposal
DAF Sludge	40 tonnes/day	Oil pit-off-site
API Sludge	33 tonnes/day	Oil pit-off-site
API Oil	120 000 tonnes/y	Recycled
Crude Tank Sludge	Unknown	Recycled
Atm and Vac Bottoms Sludge	Unknown	City Dump
FCL Spent Catalyst	10-15 tonnes/y	Brazi Refinery
Water Treatment Sludge	14 000 tonnes/y	Sludge pit-off-site
Acid Refinery Sludge	4 600 tonnes/y	Oil pit-off-site
Additive Production Sludge	2 700 tonnes/y	Oil pit-off-site
Spent Bentonite	4 500 tonnes/y	Oil pit-off-site
Existing Oily Sludge Pit Off-Site	120 000 cubic meters	Needs Fixation
Miscellaneous Office/ Cooking Waste	Unknown	To city landfill

In Section A, the failure of the vacuum filter system and the non-operation of the incinerator was discussed. It is anticipated that the currently planned use of centrifuges to prepare the sludge for incineration, will eliminate the continual use of the off-site oily pit for the DAF, API and biological sludges. Process modifications are planned which will eliminate the generation of acid refining and bentonite sludges.

1.5 Impact of Maintenance

The plants inability to deliver the proper maintenance has a significant impact upon the emissions from the refinery. These items were discussed in Section A, but to summarize the following is presented.

- Excessive oil loss at railroad yard
- Excessive oil loss at tank farms
- Excessive oil loss at process units
- Excessive oil loss at waste water treatment plant
- Excessive product loss through flaring
- Loss of sulfur product due to non-operability of the amine / claus units
- Loss of product due to the non-operation of the air preheaters and carbon monoxide boilers.

The plant personnel appear to recognize the problem of minimal maintenance, but are unable to provide the necessary proper material and supplies to improve the level of maintenance.

2. HANDLING OF MATERIALS

2.1 Tetra-ethyl lead (TEL)

Not reviewed.

2.2 Aromatics

Not reviewed.

2.3 Solvents

Not reviewed.

2.4 Halogenated Hydrocarbons

Not reviewed.

2.5 Heavy Metals

The only program to handle heavy metals is the recycle of various catalyst.

The heavy metals accumulated in the various bottoms or sludges are deposited in the off-site oil pit or the city municipal solid waste land fill.

When the sludge centrifuge system is installed and the sludge incinerator re-activated some of the heavy metals will be collected in the cyclone separators. These particulate control devices are relatively ineffective to control the fine heavy metal particulate. Therefore after the incinerator system has reached a reasonable steady-state operation, the exhaust gas must be sampled and the particulate material analyzed for heavy metals. The particulate material must be collected using isokentic methodology.

2.6 Sulfur

Sulfur is not currently being recovered and collected

The sulfur arriving at the refinery in the crude oil exits either in the product shipped or emitted into the atmosphere.

2.7 Sulfuric Acid, HF

Not reviewed.

2.8 Combustion Products

Nitrogen oxide and sulfur oxide

Neither of these pollutants are being controlled. A program for their handling has been recommended in previous sections of this report.

2.9 Tars

The plant produces electrode quality carbon from the low sulfur crude oil tars.

The tars from the high sulfur crude oils are normally combusted in the power houses. Also the acid tar from the acid treating of oils is normally combusted in the power house.

During our visit the tops of the power house stacks were observed on numerous occasions. Most of the time the dust over the flue tips was a typical light haze indicating both sulfur oxide and fine particulate material. A couple of times the stack plume was dark gray to solid black. This indicates improper combustion control or a flame out. The power house was not visited to determine the causes.

3. MEASUREMENTS OF EMISSIONS

No environmental emissions were either monitored or measured during the visit. However, according to Petrotel's administration group, Romania has regulations establishing emission limits for various components. By observation only (no quantitative data were available) the level of air pollution is high. The refinery does not have any modern instruments which would permit continuous monitoring of emissions from their many possible sources of air pollution. Petrotel lacks experience and / or knowledge of methods of continuous emissions monitoring and its related instrumentation.

Since the success of any emissions monitoring program is critically dependent on experience, it is recommended that Petrotel obtain a portable integrated system for flue gas analysis and short term monitoring. Such a system will measure SO_2, NO_x, CO, CO_2, temperature, stack draft, efficiency, and will also test for smoke. This portable analyzer would permit the refinery to develop initial skills in monitoring. Even more important is that by using this portable analyzer the refinery should be able to accomplish a detailed emissions audit of all their sources of pollution, evaluate the degree of pollution contributed by each source and develop some strategy of reducing the emissions before they have to start their first continuous emissions monitoring system. This instrument should also aid in increasing heater efficiency.

It should be noted however, that if there is limitation of hard funds available for the Petrotel Refinery, then a portable analyzer should be considered as a second level priority item.

J. ENERGY EFFICIENCY IMPROVEMENTS

An effective energy improvement program would be more successful if it was implemented following a comprehensive refinery overhaul to upgrade the equipment to international industrial standards. The upgrade program would include a provision for proper and adequate spare parts.

The energy efficiency improvement opportunities described in this section are not given in any special order. They are organized in terms of immediate medium-term, and long-term opportunities.

An important improvement is the need to institute methods and procedures for identifying and effectively controlling all material losses. This task will be difficult, time consuming, and expensive to implement based on the observed state of equipment and instrumentation capabilities. However, the reported losses must be eliminated as they represent an order of magnitude of savings similar to those that can be accomplished by all other major efforts of improving energy efficiency throughout the refinery.

1. IMMEDIATE OPPORTUNITIES

- Institute a "Material Control Committee" with responsibility to identify and reduce hydrocarbon losses to more acceptable levels.
- Utilize a variable frequency drive on a trial basis for a high pressure drop control valve service to reduce excessive pump power needs.
- Alternatively, trim impellers on pumps delivering excessively high heads and control valve losses.
- Test the reduction of stripping steam rates to the atmospheric and vacuum tower bottoms together with increased bottom side stream off-take. It is expected that product quality should be little affected.
- Commission a study for minimizing waste heat boiler tube corrosion problems leading to long term losses when out of service.
- Consider a short term test on decreasing desalter water application together with improved demulsifier selection. The aim is to minimize water injection without affecting salt reduction.
- Investigate power recovery turbines in high pressure drop liquid let down service in the gas oil hydrotreater.

- Insulate bare piping, fittings, pumps etc. where service temperature exceeds 65 °C. It is acknowledged that flanged joints are to be left bare in hydrogen service for safety reasons.

- Investigate the economics of converting to low nitrogen oxide burners.

- Develop a heat exchanger monitoring system to follow fouling trends and measure effectiveness of performance in order to optimize cleaning schedules.

- Acquire suitable linear programming (LP) software for performing refinery operations optimization studies and institute studies to establish future crude slate and product slate scenarios.

- Acquire or develop a maintenance control program for all process equipment.

- Arrange for the training of a qualified staff member in the techniques and use of "Pinch" technology.

- Study the potential benefits of a preflash system before the crude tower utilizing process simulation and "Pinch" technology.

- Arrange attendance of suitably qualified staff to short "professional advancement" courses on fired heaters, advance control systems, environmental and loss control, etc. as appropriate.

- Acquire a portable flue gas analyzer to aid in heater control improvements.

- Acquire a non-contact industrial thermometer to aid in the monitoring of hot spots for maintenance correction.

- Commission an energy audit of the FCCU to identify the cause of the high energy consumption and provide recommendations for improvement.

- Initiate effective combustion air control program on all process heaters.

2. MEDIUM TERM OPPORTUNITIES

- Evaluate the replacement of corrosion resistant rotors in the Ljungstrom air preheaters.

- Extend surface of waste heat recovery coil in Crude Unit 1 to reduce stack gas temperature.

- Consider the merits of a crude receiving custody transfer installation.
- Arrange attendance of a suitable staff member to an education/training seminar on USA environmental practices and monitoring.
- Acquire low cost refinery simulation software for improved in-house studies for of energy recovery projects.
- Commission a study on the strategy and instrumentation for tank farm management to minimize loss of crude oil and products.
- Commission a study for inter-unit product transfers and accounting to control oil loss.
- Arrange attendance of appropriate staff to short term business management courses for an introduction to Western practices, methods and techniques.
- Study the addition of a vacuum pump to replace the steam vacuum jets in the normal operation of the vacuum unit.
- Commission a comprehensive feasibility study for the recovery of low level refinery waste heat for district heating.

3. LONG TERM OPPORTUNITIES

- Procure numerical control units for the maintenance shop and write programs for time consuming tasks such as tube sheet drilling.

J. ENERGY EFFICIENCY IMPROVEMENTS

1. IMMEDIATE OPPORTUNITIES

Description	Cost	Pay-Off
1. Institute a "Material Control Committee" to be responsible for carefully examining all aspects of hydrocarbon movements and processing to satisfactorily close the mass balances for all operations and identify the points of all losses. Thereafter to implement actions to control and minimize these losses through a practical loss prevention strategy and to monitor the results on a continuing basis.	Negligible considered to be a normal extension of Refinery Management and operational responsibilities.	At 3 500 000 tonnes/year capacity and $150/tonne crude a 0.01 percent decrease in refinery losses reported would equal $52 500/year

1. IMMEDIATE OPPORTUNITIES

Description	Cost	Pay-Off
2. Test performance and effectiveness of variable speed drives on selected high pressure drop pump circuits using variable frequency control. Select situation(s) where the control valve pressure drop approximates 30 percent of total pump head at normal flow which would rise to 50 percent or more at a reduced 85 percent capacity rate or less. Note: Suggest crude unit feed pump trial and if experience is satisfactory extend to other appropriate applications	50 kw: Material = $9 000 Installed = $11 500 (@1.25 Factor) 200 kw Material = $31 000 Installed = $38 750	Power cost use = $0.06/kwh 50 kw Pump @ 30% CV loss = 15kw x 24 x 330 x 0.06 = $7 128/year Payout = $11 500/7128 = 1.61 years 50 kw @ 50% CV loss; payout = 0.97 years 200 kw Pump @ 30% CV loss; payout = 1.36 years @ 50% CV loss; Payout = 0.82 years

1. IMMEDIATE OPPORTUNITIES

Description	Cost	Pay-Off
3. Trim selected pump impellers where excessive control valve pressure drop is observed to a minimum 0.1 MPa pressure drop at design flow rate. If total head can only be reduced 10 percent the energy savings will be significant. Note: Crude and vacuum unit feed pumps are best candidates	Approximate 40 man hours or say $500 per impeller	Power cost at $0.06/kwh <u>50 kw Pump</u> 5 kw x 24 x 330 x $0.06 = $2 376/year Payout = 0.21 years = 11 weeks <u>200 kw Pump</u> 20 kw x 24 x 330 x $0.06 = $9 504/year Payout = 0.0526 years = 2.7 weeks

1. IMMEDIATE OPPORTUNITIES

Description	Cost	Pay-Off
4. Consider a short term test for reducing stripping steam rate to the atmospheric bottoms from 3.5 weight percent to approximately 2.0 weight percent. The degree of overflash and/or offtake of atmospheric gas oil should also be investigated. Objective is to reduce the steam injection rate without affecting product quality to any significant degree. Expected savings: up to 1.7 tonnes/hour steam Note: Similar test also applicable to the vacuum tower	Negligible but allow $5 000 for increased lab testing	LP Steam $6.61/tonne Value = 1.7 tonnes/h x $6.61 x 24 x 330 = $88 997/year Payout = 0.056 years = 3 weeks

1. IMMEDIATE OPPORTUNITIES

Description	Cost	Pay-Off
5. Commission a study to mitigate corrosion effects in fuels and lube plant waste heat boilers due to increasing flue gas sulfur.	Budget $5 000 to $10 000	Indeterminate depending upon study results and recommendations.

1. IMMEDIATE OPPORTUNITIES

Description	Cost	Pay-Off
6. Consider a short term test program for a step wise decrease in desalting water application together with laboratory advice on optimum/economic selection of demulsifier agents. Note: A 1.0 percent decrease in water injection rate for a crude run of 3 500 000 tonnes/year will save: Ca 4420 x (110-20) = 398 000 kcal/h	Negligible but budget $5 000 for extra laboratory work and engineer's time	Fuel: $62/tonne @9.5 x 10^6 kcal/tonne A 1.0% decrease 398 000/(9.5 x 10^6) x 113.15 = $2.60/h x 24 x 330 = $20 572/year

1. IMMEDIATE OPPORTUNITIES

Description	Cost	Pay-off
7. Investigate economic feasibility for effective power recovery from high pressure liquid let-down in gas oil hydrotreater.	Budget: Hold until suitable machine for the service can be identified.	Undetermined. Await study results.

1. IMMEDIATE OPPORTUNITIES

Description	Cost	Pay-Off
8. Insulate bare pumps, valves, piping etc. and jacket with aluminum where process temperature exceeds 65 °C. Note: Flanged joints to be left bare in hydrogen service for safety reasons.	Assume 20 items at 1.0 m^2 each Installed cost at $210/$m^2$ = $52 500	At average process temperature = 150 °C heat loss with 3 m/sec wind approximately 3 200 kcal/m^2 = 800 000 kcal/h Fuel: $62/tonne @ 9 500 kcal/kg Savings: (0.800/9.5) X 62 x 24 x 330 = $41 351/year Payout = 1.27 years

1. IMMEDIATE OPPORTUNITIES

Description	Cost	Pay-Off
9. Investigate the potential for the gradual replacement of existing heater burners with high efficiency low nitrogen oxide burners Objective: - Improved air/fuel control - Decreased nitrogen oxide emissions as stricter environmental regulations are enforced - To be implemented upon positive cost/benefit results or when environmental concerns dictate.	Budget $5 000 for study. Undetermined until study completed in respect to implementation.	To be established by study

102

1. IMMEDIATE OPPORTUNITIES

	Description	Cost	Pay-Off
10.	Develop and institute a heat exchanger train temperature and pressure monitoring program to detect fouling rates with aim to optimize anti-foulant injection and/or cleaning program.	Minimal	Undetermined, but an improvement on existing practice

1. IMMEDIATE OPPORTUNITIES

Description	Cost	Pay-Off
11. Acquire a suitable refinery linear program (LP) software, such as "PIMS", to enable the reliable modelling of the refinery and eventually the total complex. When completed (allow 6 months) the model will permit a systematic approach to optimizing operations with regard to feedstock/processing costs and product marketing realities. A study will also be needed to establish future crude slate and product slate scenarios. As experience is gained, the model can be utilized to study, analyze and identify: • areas of existing deficiencies • means of maximizing product profitability • optimum modernization possibilities.	Budget: Software: $5 000 Staff: 2 man years estimated at $100 000	Undetermined, but at 3 million tonnes per year crude throughput at $150 tonnes $450 million/year $100 000 represents 0.022% of crude cost. Experience indicates average improvements of 10% in operational profitability can be achieved using LP techniques

1. IMMEDIATE OPPORTUNITIES

Description	Cost	Pay-Off
13. Develop or acquire a maintenance history program or more sophisticated history, spare part catalogs/inventory repair method work order, etc. program to monitor and initiate a more effective preventive maintenance system for process equipment Objective: To better track equipment problems and devise strategies to reduce down time and expense of equipment failures.	Budget: Up to $50 000	Undetermined but established as a cost effective procedure in modern maintenance operations.

1. IMMEDIATE OPPORTUNITIES

Description	Cost	Pay-Off
14. Arrange for the attendance at a Linhoff- March pinch technology training seminar at a European location of a qualified engineer fluent in English The aim will be to assess existing heat exchange networks for improvements to higher energy efficiency and to pass on the instruction received to other staff members	5 day course approximately $ 2 500	Undetermined but nearly immediate upon the first improvement implemented

1. IMMEDIATE OPPORTUNITIES

	Description	Cost	Pay-Off
15.	Allied with the pinch technology training experience, commission an engineering / economic study for evaluating the merits of installing a preflash tower before the crude distillation tower. This could also involve consideration of alternatives to hydrotreating the total overhead naphtha stream and the light end refractionation scheme.	Budget: $5 000 to $10 000	Undetermined but the objective is more effective crude preheat system, recovery of heat from product stream and minimizing refractionation of light ends

1. IMMEDIATE OPPORTUNITIES

Description	Cost	Pay-Off
16. Arrange attendance of suitably qualified staff with appropriate language capabilities to short refresher courses in "Professional Advancement" such as conducted at the Amsterdam RAI by qualified US/European instructors. Subject to availability, courses could include: Fired heaters Advanced control systems Environmental & Loss control Engineering Computing Refinery Management Product Quality control Objectives: To introduce participants to state of the art techniques, methodologies and practices in their specialties. Also to provide an important contact with Western colleagues.	Budget: Allow $2 500 per course. Suggest an initial trial of 5 courses for evaluation of benefits	Undetermined but would expect a pay off in 1 year through improved competence

1. IMMEDIATE OPPORTUNITIES

Description	Cost	Pay-Off
17. Action : Purchase one non-contact industrial thermometer model 514L Thermo Hunter pro Benefit: Allows maintenance crew to measure surface temperature and determine hot spots for energy audits and trouble shooting surveys, thereby leading to energy savings through installation of additional insulation. Supplier: Capintee Instruments, Inc. or equivalent	Budget: $1 500	Less than 1 year

1. IMMEDIATE OPPORTUNITIES

Description	Cost	Pay-Off
18. Commission an energy audit of the FCCU to identify the essential cause of the high energy consumption rates reported and issue recommendations for correction with estimated costs.	Budget: $10 000	Undetermined but with energy overruns some 75% above expectations a 10% energy reduction of the 1005 Gkcal/year, based on $62/tonne fuel oil at 9 560 kcal/kg at 80% efficiency is equivalent to $818 800/year

1. IMMEDIATE OPPORTUNITIES

Description	Cost	Pay-Off
19. Cooling water treating for hydrocarbon removal two staged effort:		
Stage 1 for Immediate Action Utilizing Present Facilities The staff in charge of water treating should prepare a specification and request for quotation package. Such a request for quotation would be forwarded to world recognized water treating organizations; e.g. Tretolite, Calgon, Nalco, etc. for competitive bid.	Budget: $5 000	Estimate 5% improvement in heat exchange; consider Distillation Unit #1 as a model: 36.25×10^6 Btu/h $0.05\ (36.25 \times 10^6) = 1.81 \times 10^6$
Stage 2 For Future Short Term Capital Improvement Implement the competitive bidder's immediate treatment in existing facilities. Continue study with participation of a consulting engineering firm for capital equipment modernization; e.g. consider John Brown E & C; M.W. Kellogg; Bipronaft, Krakow Poland, etc.	Budget: $500 000	$3.467(24)(1.81) = $150.61/day 5 000/150.61 = 33.2 days Payout = 1 month Payout to be determined by consultant retained

1. IMMEDIATE OPPORTUNITIES

Description	Cost	Pay-Off
20. Adjust burner air dampers on all process heaters. Calibrate and install indicating oxygen analyzers in flue gas. Set air dampers to yield 1.3 to 2.1 percent oxygen in the flue gas (approximately 10 percent excess air) Action: Install an "in-situ" type oxygen analyzer in a process unit heater/furnace to help the refinery improve its heater/furnace efficiency by reducing air in the flue gas. Benefits: Improve combustion efficiency. Also, since the refinery has no modern zirconium oxide oxygen analyzers, such an instrument will help the refinery personnel to get familiar with highly reliable and accurate analyzers. Supplier: Termox (Ametek), Model WDG-IV $5 000 Undetermined	Budget: Instrument = $30 000 Installation = $10 000 Total = $40 000	Save 3% energy use Heater F-1 Crude Unit #1 for typical example: $0.03(75x10^6) = 2.25x10^6$ $3.467(225)(24) = 187.22/day 40 000/187.22 = 213 days Payout = 8 months

1. IMMEDIATE OPPORTUNITIES

Description	Cost	Pay-Off
21. Action: Attendance at education training seminar related to US practices of continuous emissions monitoring and related instrumentation. Benefit: Result will be improvement in current practices of continuous emissions monitoring and savings due to purchasing proper instrumentation.	Sending U.S. instructor to the refinery $5 000	Undetermined

1. IMMEDIATE OPPORTUNITIES

Description	Cost	Pay-Off
22. Action: Purchase portable air analyzer model "Scentoscreen" Benefit: Measures total hydrocarbons and volatile and semi-volatile organic compounds such as gasoline, benzene, toluene, ethyl benzene, xylene, C1-C6, components in air and in water samples. Will permit to audit hydrocarbon leakages in cooling water and condensate return systems, leakages in tank-farms and air pollution. Supplier: Sentex Technology, Inc.	Under $12 000	Less than 1 to 2 years

2. MEDIUM TERM OPPORTUNITIES

Description	Cost	Pay-Off
1. Replace Ljungstrom air preheater with stainless steel or equal corrosion resistant plates in two power boilers. Ref: Tel contact with Ljungstrom	Budget: Carbon steel $100 000 each 36 month life Stainless steel $250 000 each 240 month life Installation cost: $20 000 each, estimated	Based on 240 month term: Carbon Steel Units 240/36 x 2 x $100 000 = $1 333 333 Installation costs: = 240/36 x 2 x $20 000 = $266 660 Total expense = $1 600 000 Stainless Steel Units = 2 x $250 000 = $500 000 Installation cost: 2 x $20 000 Total expense = $540 000 Savings 1 060 000 over 20 years = $53 000/year in favor of stainless steel Note: This simple analysis excludes financial discounting and energy losses

2. MEDIUM TERM OPPORTUNITIES

Description	Cost	Pay-Off
2. Crude Unit No. 1 Add low pressure steam waste heat recovery unit to supplement existing steam coil. reduce flue gas exit temperature from 362 °C to 177 °C based on the practical minimum limit of flue gas temperature For sulfur corrosion reduction. Generate saturated steam 149 °C 4 bar boiler feed water supply 16 °C. Steam rate = 3.43 tonnes/hour This opportunity also exists in Crude Unit No. 2 FCCU and the Hydrotreating Unit	Budget: $135 000 Installation: $120 000 Instrument: $15 000 Total: $270 000	Save 8.66 x 10^6 Btu/hour $3.467(24)(8.66) = $720.58/day 270 000/720.58 = 374.7 days Payout 1 year + 1 month

2. MEDIUM TERM OPPORTUNITIES

Description	Cost	Pay-Off
3. Continuous emissions monitoring CO, SO_2, NO_x, CO_2 or O_2 and capacity Suppliers: Lear Siegler, Anarad, Rosemont	Up to $100 000 per source, depending on the updated National rules and regulations	Depending on regulations and penalties

2. MEDIUM TERM OPPORTUNITIES

Description	Cost	Pay-Off
4. Custody Transfer installation (crude receiving). Transportable meter prover with trailer (no truck) Suppliers: Xelix or Brooks	$200 000 to $350 000	Undetermined

2. MEDIUM TERM OPPORTUNITIES

Description	Cost	Pay-Off
5. Action: Commission a study to evaluate best strategy and instrumentation for tank farm management Benefit: Will permit to eliminate unnecessary losses of crude and oil products	Undetermined	Undetermined

2. MEDIUM TERM OPPORTUNITIES

Description	Cost	Pay-Off
6. Action: Commission a study to evaluate the best strategy and instrumentation for inter-unit product transfer and accounting. This study should account for pending organizational changes in the refinery. Benefit: Reduction of unnecessary losses of products	Undetermined	Undetermined

.. MEDIUM TERM OPPORTUNITIES

Description	Cost	Pay-Off
7. Arrange attendance of appropriate qualified staff to a short term course in Business Management at an approved or certified institution in the USA or Europe. Objective: To acquaint East European managers with modern business practices, methods and techniques and to provide the opportunities for useful contacts and bonds with their Western counterparts.	Budget: Assume 2 to 3 month courses and 3 to 5 participants over a two year period at $10 000/month $60 000 to $150 000 (estimated)	Undctermined, but should contribute to and improve refinery organization, efficiency and potentially its profitability

2. MEDIUM TERM OPPORTUNITIES

Description	Cost	Pay-Off
8. Commission a comprehensive feasibility study for the optimum recovery of low level refinery waste heat streams for use in district heating in the town of Ploiesti. A full and comprehensive cost/benefit analysis is to be prepared specification for competitive bidding is recommended.	Budget: $25 000 to $50 000 for a comprehensive investigation	Undetermined, but expected to be very energy efficient. Note: Other local refineries could also effectively contribute to the scheme so close coordination is desirable.

3. LONG TERM OPPORTUNITIES

Description	Cost	Pay-Off
1. Action: Commission study to evaluate the refinery needs in modern analytical equipment for the Central Laboratory and modern on-line analyzers. Benefits: Results in improved energy efficiency and product yield and consistency.	$5 000	Undetermined

3. LONG TERM OPPORTUNITIES

Description	Cost	Pay-Off
2. Start-up the existing Visbreaking unit.	Undetermined	Undetermined

3. LONG TERM OPPORTUNITIES

Description	Cost	Pay-Off
3. Procure numerical control units for the maintenance shop lathes and milling machines. Write numerical control programs for the most common and time consuming tasks such as tube sheet drilling, for example.	Cost to be evaluated against commercial bid tabulation versus minimum shop requirements	Undetermined but to be based upon productivity improvements

3. LONG TERM OPPORTUNITIES

Description	Cost	Pay-Off
4. Action: Field and Control Room Instrumentation Commission a study to evaluate best strategy of implementation of modern field and control room instrumentation, including DCS Benefits: This study will permit establishing the most economical ways of implementation of modern instrumentation along with modernization of the refinery's process units.	Roughly estimated at $1 700 000 for 3 process units	Similar instruments in Western refineries have paid off in 2 to 3 years.

K. ENVIRONMENTAL EMISSIONS REDUCTIONS

The following recommendations, if implemented in 1991-92, could bring the environmental emissions closer to Western Europe standards by the end of 1995.

- Conduct a process block waste survey
- Install local waste control devices or replace process unit causing excessive loss
- Upgrade the mechanical oil / sludge removing system at the exiting separator boxes
- Upgrade the aeration turbine gear boxes or replace with higher quality units
- Repair the sludge clarifiers
- Install sludge centrifuges
- Revamp the sludge thickeners
- Revamp the sludge incinerator
- Investigate the causes of excessive unit flaring
- Upgrade unit process control to minimize the unit flaring
- Reactivate the steam rings at the flare heads
- Initiate the ground water sampling near the oily sludge pits
- Initiate studies to determine how to stabilize the 120 000 cubic meters of oily sludge
- Revamp the amine scrubbing system and place in operation
- Revamp the Claus limit and place in operation
- Revamp the air preheaters
- Initiate a cost analysis to determine whether to add flue gas desulfurizing or more severe hydrotreating of the fuel oil

To summarize, our recommendations are categorized into three areas; immediate, medium term, and long term opportunities.

1. Immediate Opportunites

The acquisition and immediate use of portable flue gas and VOC analyzers, coupled with appropriate corrective action would reduce emissions.

2. Medium Term Opportunities

The refinery has a significant problem of the loss of an excessive amount of oil from the process units. It is estimated that 330 tonnes of oil per day are recovered from the waste water treatment plant per day. For various reasons, the process unit operators can not or do not observe the waste water flow and detect the times of significant oil loss. In some cases, even when it is known that oil leaks exist within the unit, the operators can not stop the loss since the spare parts or maintenance personnel are not currently available. The prevailing concept is the WWTP plant will collect the oil and return it to the process. It is not well known that the WWTP is undersized and a significant amount of oil, 3.7 tonnes/day is released in the partially treated waste water.

Therefore a two step program of waste reduction is recommended. One is to initiate an education program for the operators to make them more aware as to the actual loss of oil. The second is to install some method of alerting the operators when a significant loss of oil is occurring. The most reliable method is to use a form of an API type separator at the process units and have the operators responsible for minimizing liquid effluent discharge.

To determine the priority of installing local pretreatment API separators a detailed waste source study should be conducted. This involves investigating each process unit sewers to determine the flows and pollution loading. With these data the priority of constructing the local API separators could be scheduled.

The existing waste water treatment plant is not capable of treating the current waste flow to a level to meet the current standards. Part of the waste flow is treated on-site and discharged to the Teleajen River. Another part of the flow is provided with only partial or pretreatment and pumped to the area WWTP at Corlatesti. The Corlatesti WWTP provides complete treatment for numerous industrial plants.

The existing on-site treatment facilities are not operating at their full potential. The following conditions were noted:

- The mechanical oil skimming / sludge scooping equipment was not operable.
- The dissolved air flotation units were not operable.
- The biological sludge clarifiers were not functioning properly.
- The oily and biological sludge thickener was not operating.

The net effect is to have the waste water receive only partial treatment and not meet the current standards. Therefore two actions must be undertaken.

The first action is to determine what changes must be made to each unit to have it work to its design and hydraulic capability. This may be accomplished by providing spare parts, providing new higher quality parts, modifying the existing mechanisms. A detailed analysis of each system must be completed to determine what corrective action will prove most successful.

The second action, which coordinates with the waste source study, is to develop a plan to reduce waste water flow and WWTP expansion. Before any WWTP expansion plans are undertaken, the source of the wastes must be analyzed. When sources are known, it may be possible to reduce the waste load by improving the design of the process unit generating the waste water. Many times the re-design of a process unit will increase its process efficiency and at the same time reduce the waste load to the waste water treatment plant. Therefore, before any expansion of the WWTP is undertaken the source identification study must be completed.

The sludges produced from tank, oil / water separator or clarifier cleaning are currently trucked off-site to an oily sludge lagoon. The plant estimates the quantity of oily sludge accumulated is 120 000 cubic meters.

At one time a vacuum filter and sludge incinerator system was installed. Due to numerous operational problems and excessive cost of operation, the system was abandoned in place.

The plant is currently investigating companies that could prepare the sludge by use of centrifuges. The plan is to remove the existing non - operating vacuum filter, install new centrifuges and incinerator feed pumps. It is believed the reactivated incinerator will be capable of processing the sludges normally produced.

The top of the oily sludge lagoon dike is above the natural grade of the area. During the site visit it was observed that the dikes have had significant leakage problems. Oil break outs were observed in four locations. The plant has constructed a new lagoon and lined it with one - half to one meter of natural clay. The new lagoon is to be put into service within the next couple of months. The new lagoon dike top is at a lower elevation. It is intended to release the current dike break - outs by draining some of the sludge from the old lagoon to the new lagoon.

The two oily sludge lagoons are within 100 meters of the Teleajen River and at a higher elevation. Also, the local municipalities have an active solid waste landfill adjacent to the oily sludge lagoons.

The two major environmental problems exist at this site. The first is to eliminate the hazard associated with the oily sludge lagoon. The second is the potential ground water contamination.

The plant already has developed process changes that will eliminate a portion of the sludge generation. That is, they will stop using bentonite clay in their white oil processing. This in conjunction with the new centrifuges and incinerator reactivation will eliminate the accumulation of sludge.

The second potential problem is that ground water contamination. As stated, the dikes had numerous break - outs of oil. The construction of the old lagoon bottom is unknown. Therefore the ground water near the old lagoon should be investigated to determine if there is any migration or contamination from the lagoon. A series of ground water sample wells should be installed and the ground water sampled and analyzed. If pollution is indicated additional sample wells may be required to access the magnitude of the pollution. Once the magnitude of the pollution plume is identified, a ground water extraction and treatment program can be developed.

If no pollution is noted during the first sampling, a sampling program should be developed to periodically monitor the ground water until the existing sludge is removed and chemically treated.

During the two days of our visit, it was noted that the flares from the facility process units were emitting significant black plumes. It was reported that the flare tips are of the smokeless type supplied with atomization steam. It was reported the steam has been shut off to conserve energy. It was also stated the process unit operator does not know when his unit is flaring.

Therefore a two phased program should be developed to control both the length of time a unit flares and the amount of air pollution generated due to incomplete combustion. The first phase should be the installation of some alarm device to let the operator know when one of his units is flaring. This could be as simple as

installing a pressure alarm to as complex as using a mass flow meter in the various flare vent lines. In any case, the operator needs to be alerted that an upset condition is occurring. An alternate may be to install an upgraded process controller that could reduce the frequency of flaring.

The second phase could be the installation of a flow meter in the flare riser to automatically turn on the atomization steam. This meter could be a mass flow type.

3. Long Term Opportunities

The refinery is equipped with an amine hydrogen sulfide scrubber / stripper and a two reactor Claus system. During the time of our visit, the units were not operating. The reason given was they ran out of amine last year and were leaking the hydrogen sulfide to the fuel gas to be combusted in the process heaters. At the process heater, the operators were bypassing the air preheaters because of the high SO_3 which was causing excessive corrosion. Therefore an excessive amount of sulfur is being emitted to the atmosphere.

Therefore to conserve energy, minimize corrosion and recover sulfur, the inoperative amine / claus system should be revamped and put back into operation.

The existing acid / oily sludge in the sludge lagoons should be stabilized to prevent the potential of ground water contamination. This effort will require in excess of $10 million (U.S.).

If the refinery continues to purchase high sulfur crude oil, flue gas desulfurization, or hydrotreating of the fuel oil must be considered.

APPENDIX A. EXCERPT FROM CHARACTERIZATION REPORT

7. PETROTEL S.A. - PLOIESTI, ROMANIA

Address: Petrotel S.A.
Mihai Bravu St. 235
2000 Ploiesti, Romania

Telephone: (71) 44151
Telex No.: 19275
Telefax No: (71) 42031

Contact: Emilian Moiceanu
Technical Director

7.1. Summary Description of Refinery

Petrotel S.A. is a petroleum processing and petrochemical company. All capital belongs to the Romanian state and could be transferred to the private sector under the provisions of the law of privatization.

The Petrotel refinery and petrochemical complex is located on the east side of the city of Ploiesti approximately 6 kilometers from the center of the city. The refinery site occupies an area of 235 hectares near the Teleajen River. Originally built in 1904, the refinery was owned by Standard Oil of New Jersey until 1948, when it was nationalized. See Map Figure 1.

The plant has been upgraded numerous times throughout its history. Units were rebuilt after receiving extensive damage during World War II. During 1955 and 1959, a Soviet design line for lube oils manufacturing was built and in the middle of the 1960s the additives manufacturing plant was commissioned.

In 1977, the refinery's capacity for processing imported high sulfur crude oil was upgraded to 3.5 million tonnes/y. The new units were of Romanian design, although some were under the UOP license, and included an atmospheric and vacuum distillation unit, gasoline hydrofinishing, catalytic reforming, gas fractionation, kerosene and gas oil hydrodesulfurization, normal paraffin (C_9-C_{13}) separation of Chinese license, a fluid catalytic cracking unit, a delayed coking

plant, and a gas desulfurization and sulfur recovery plant. A visbreaker was recently commissioned. This modernization allowed the refinery to increase its capacity and diversify its product base, along with supplying feedstocks to the petrochemical complex which was built in the same period. Table C.7.1.1 shows the main process units.

The overall material balance for 1990 is presented in Table C.7.1.2. Operations during the last 12 months is compared to reference data based on design provisions and / or on earlier results. The refinery Block Flow Diagram is shown in Figure No. 9.

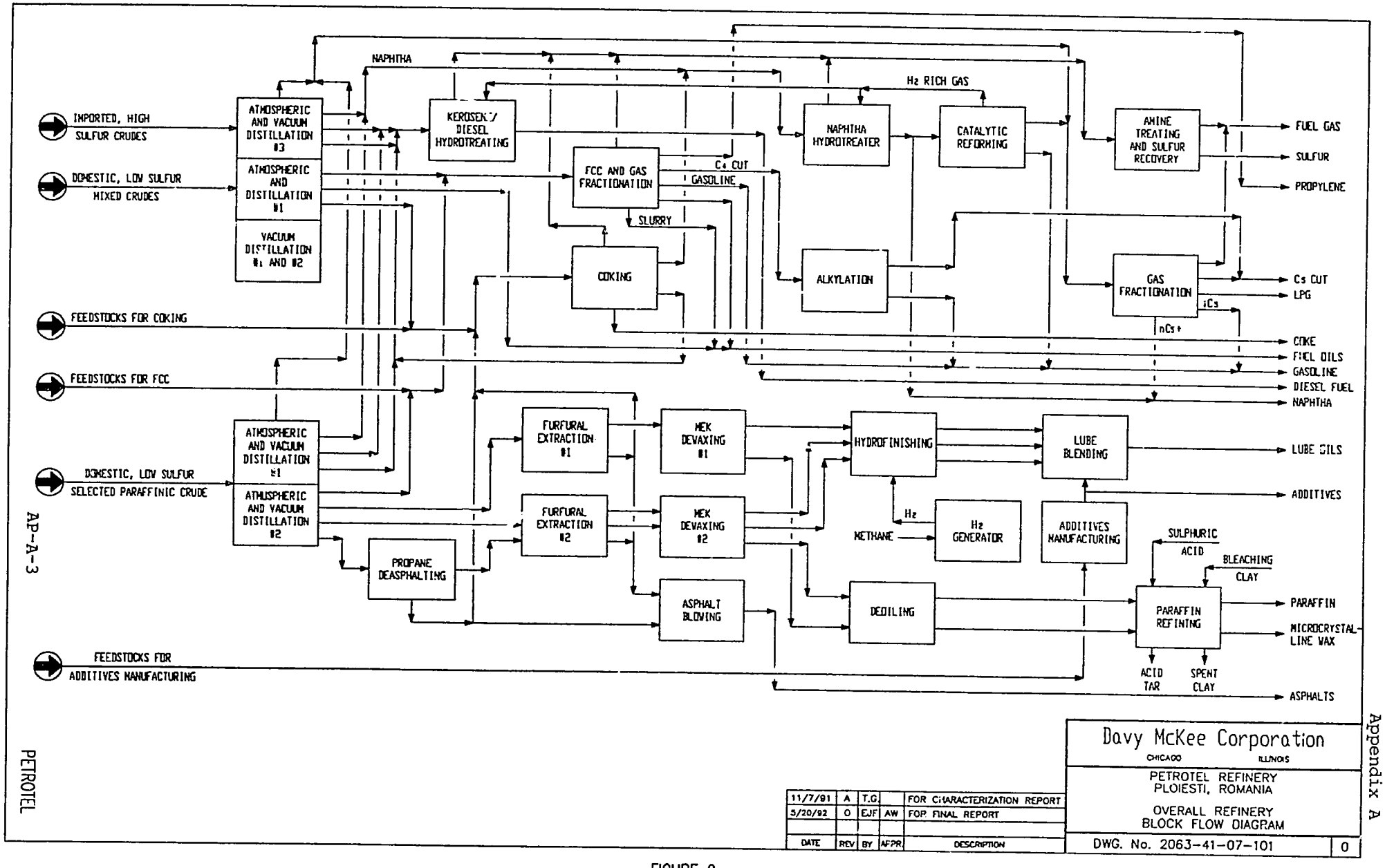
IMPORTED, HIGH SULFUR CRUDES
DOMESTIC, LOW SULFUR MIXED CRUDES
FEEDSTOCKS FOR COKING
FEEDSTOCKS FOR FCC
DOMESTIC, LOW SULFUR SELECTED PARAFFINIC CRUDE
FEEDSTOCKS FOR ADDITIVES MANUFACTURING
ATMOSPHERIC AND VACUUM DISTILLATION #3
ATMOSPHERIC AND DISTILLATION #1
VACUUM DISTILLATION #1 AND #2
ATMOSPHERIC AND VACUUM DISTILLATION #1
ATMOSPHERIC AND VACUUM DISTILLATION #2
NAPHTHA
KEROSENE/ DIESEL HYDROTREATING
FCC AND GAS FRACTIONATION
C4 CUT
GASOLINE
SLURRY
COKING
PROPANE DEASPHALTING
FURFURAL EXTRACTION #1
FURFURAL EXTRACTION #2
MEK DEVAXING #1
MEK DEVAXING #2
ASPHALT BLOWING
H2 RICH GAS
NAPHTHA HYDROTREATER
CATALYTIC REFORMING
ALKYLATION
HYDROFINISHING
DEOILING
METHANE
H2
H2 GENERATOR
AMINE TREATING AND SULFUR RECOVERY
GAS FRACTIONATION
iC5
nC5+
LUBE BLENDING
ADDITIVES MANUFACTURING
SULPHURIC ACID
BLEACHING CLAY
PARAFFIN REFINING
ACID TAR
SPENT CLAY
FUEL GAS
SULFUR
PROPYLENE
C5 CUT
LPG
COKE
FUEL OILS
GASOLINE
DIESEL FUEL
NAPHTHA
LUBE OILS
ADDITIVES
PARAFFIN
MICROCRYSTALLINE WAX
ASPHALTS
Davy McKee Corporation
CHICAGO ILLINOIS
PETROTEL REFINERY
PLOIESTI, ROMANIA
OVERALL REFINERY
BLOCK FLOW DIAGRAM
DWG. No. 2063-41-07-101
0
DATE REV BY APPR DESCRIPTION
11/7/91 A T.G. FOR CHARACTERIZATION REPORT
5/20/92 0 EJF AW FOR FINAL REPORT

FIGURE 9

TABLE C.7.1.1 - PROCESS UNITS

No.	Name of the Unit	Capacity Tonnes/Y (Feed)	Licensor	Designer	Remarks
1	Atmospheric Distillation #1	300 000	Unknown	Unknown	Commissioned 1938
2	Atm and Vacuum Distil #1	600 000	USSR	USSR	Commissioned 1954 desalting included.
3	Atm and Vacuum Distil #2	600 000	USSR	USSR	Commissioned 1954 desalting included.
4	Atm and Vacuum Distil #3	3 500 000	ICERP	IPIP	Commissioned 1974 desalting included.
5	Propane Deasphalting	230 000	ICERP	IPIP	Under construction. Built from old unit. To be started 1991.
6	Furfural Extraction #1	200 000	USSR	USSR	Commissioned 1956.
7	Furfural Extraction #2	200 000	USSR	USSR	Commissioned 1957 revamped 1964.
8	MEK Dewaxing #1	150 000	USSR	USSR	Commissioned 1956.
9	MEK Dewaxing #2	150 000	USSR	USSR	Commissioned 1956 revamped 1966.
10	Vacuum Distillation #1	170 000	Unknown	Unknown	Commissioned 1951.
11	Vacuum Distillation #2	200 000	ICERP	IPIP	Commissioned 1967.
12	Deoiling	60 000	USSR	USSR	Commissioned 1958.
13	Paraffin Finishing	20 000	USSR	USSR	Commissioned 1959.
14	Oil Hydrofinishing	180 000	ICERP	IPIP	Commissioned 1972.
15	Gas Fractionation	150 000	ICERP	IPIP	Commissioned 1978.
16	Naphtha Hydrotreating	900 000	ICERP	IPIP	Commissioned 1978.
17	Catalytic Reforming	500 000	UOP	IPIP	Commissioned 1978.
18	Kero & Diesel Hydrotreat.	1 000 000	ICERP	IPIP	Commissioned 1978.
19	Amine Treating & Sulfur Recovery	10 000 Sulfur	ICERP	IPIP	Commissioned 1978
20	Coking	700 000	ICERP	IPIP	Commissioned 1978
21	Fluid Catalytic Cracking	1 000 000	UOP	IPIP	Commissioned 1979
22	Normal Paraffins Separation	10 000	Unknown China	Unknown China	Commissioned 1979.
23	Asphalt Blowing	215 000	USSR	USSR	Commissioned 1956.
24	Additives Manufacturing	17 000	ICERP	IPIP	Commissioned 1967.
25	Visebreaking	360 000	ICERP	IPIP	Transformed from an old thermal cracking unit. Commissioned 1991. Not shown in BFD.
26	Alkylation (HF)	100 000	UOP	IPIP	Commissioned 1983.
27	Greases and Corrosion-Protecting Fluids	6 000	Unknown	Unknown	Commissioned 1942. Not shown in BFD.
28	Metal Working Oils	4 000	Not Specified	Not Specified	Built by the Refinery using old equip. Commissioned 1976.
29	White Oils Manufacturing	3 600	Not Specified	Not Specified	Built by the refinery using old equip. Commissioned 1956.

TABLE C.7.1.2 - MATERIAL BALANCE

A. Feedstocks	Tonnes/Year	
	Design	June 1990 - May 1991
Domestic Low Sulfur Crude	1 500 000	1 102 629
Imported Crude	3 500 000	2 046 593
Crude Total	5 000 000	3 149 222
Other Feedstocks	363 128	171 455
TOTAL IN	5 363 128	3 320 677
PRODUCTS OUT		
Fuel Gas	176 100	103 446
Propylene	23 800	2 624
Propane	29 600	657
C_3-C_3^1 Cut		9 946
i-Butane	9 700	
n-Butane	7 000	
i-C_4-C_4^1 Cut		1 265
n-C_4-C_4^1 Cut	20 300	4 190
LPG		12 918
Naphtha	230 100	173 271
Platformate (Transferred to Petrobrazi)	248 200	119 620
RON 90 Gasoline	852 800	395 940
Alkylate	38 400	
Kerosene	74 000	
Diesel Fuels	1 395 500	841 188
Fuel Oils	1 763 400	1 204 777
Finished Lube (& for other uses) Oils	103 700	75 169
Greases & Allied Products	7 100	4 646
Asphalts	100 000	62 451
Paraffin	12 400	7 585
Sulfur	1 200	
Coke	47 100	37 197
Other Products	12 327	2 194
Other Products Transferred	139 010	69 062
Coke on Catalyst	64 500	51 176
Losses	132 000	141 354
TOTAL OUT	5 363 128	3 320 677

Table C.7.9.1 shows the product specifications for the refinery. Petrotel is the largest lubricants manufacturer in the country, and supplies practically all of the engine oils, a large amount of industrial oils and intermediate stocks, all additives used for engine oils, and half of the paraffin wax production.

7.2. Utilities, Services, Offsites

Electricity generation and distribution

The Petrotel refinery has a co-generation type power station composed of steam boilers and six electrical generators with back pressure steam driven turbines made in the USSR. Three of the generators are rated at 6 MW at 6 kV and the other three are at 12 MV at 6 kV. The refinery can receive power from the national grid through two transformer stations rated at 110/6 kV. The refinery's electrical power requirements from the national grid are 10% in winter and 80% in summer. The variance is due to high steam consumption in the winter that allows for maximum power production. Distribution of the electrical power is at 6 kV to the separate process plants within the refinery, where stepdown transformers feed the consumers at the suitable voltage, either 0.4 or 0.22 kV.

Steam generation and distribution

Steam generation for the refinery initially consisted of seven 4.0 MPa steam boilers made in the USSR and Romania. During 1975 through 1985, six Romanian boilers were brought on line. Other steam sources within the refinery include the recovery boilers located in the FCC plant, the naphtha hydrotreater, kerosene and gas oil hydrodesulfurization, amine treating, and sulfur recovery.

Condensate collection

Condensate is collected in three stations and returned to the boiler house. Less than 50 percent of the condensate can be reused due to the high level of contamination with oil.

Fuel supply

The national network supplies natural gas, methane, by means of metering station outside of the refinery. Process plants within the refinery provide refinery fuel gases at approximately 9 000 to 10 000 nm^3/h. Liquid fuel is produced by the refinery and is used as a make-up or supply fuel. Liquid fuel specifications are shown in Tables C.7.9.1 through C.7.9.21.

TABLE C.7.2.1 - FUEL GAS COMPOSITION

Composition vol%	Natural Gas (Methane from national network)	Refinery gas* average
Nitrogen	0.60	.37
Carbon dioxide	0.07	.04
CO	-	1.69
Hydrogen	-	58.59
Methane	99.26	10.05
Ethane	0.04	19.41
Propane	0.01	4.59
Propylene	-	2.52
Isobutane	0.02	1.71
Normal butane	-	0.2
Butanes	NA	0.41
C_5+	NA	0.42
TOTAL	100	100

* H_2S content not specified

Fresh water supply

Petrotel uses fresh water that is supplied from three sources - the Paltinu reservoir on the Doftana river, the Teleajen river, and wells within the refinery.

Water treatment and distribution

Potable water is obtained from and treated at the Paltinu reservoir. Water from the wells within the refinery is used as it is received. Water that is used in recirculating systems for the cooling towers is treated. BFW is treated by ion exchange.

Cooling towers

Seven groups of cooling towers supply water for different groups of process units. The alkylation unit has a separate cooling water facility. The cooling towers are both natural and forced draft types. Water is cooled about 7°C, and the outlet temperatures are 20 to 22°C in the winter and 30 to 32°C in the summer.

Crude oil receiving

Petrotel receives all of its crude oil through pipelines. Imported crude from Constanta arrives at a rate of about 20 000 tonnes per day.

Product blending and shipment

Petrotel uses tank blending for products. Shipments are via pipelines with connections to Petrobrazi Refinery and Petrotrans S.A., a petroleum products transporting company. The Petrotrans S.A. pipelines connects the Constanta harbor and other areas of Romania.

The pipelines ship gasoline, diesel fuel, LPG, and C_4 cuts. Automatic loading racks for railroad tank cars are used to load petroleum products, gasolines, diesel fuels, kerosenes, and liquid fuels. Control of the loading facilities is by a weigh scale. At present, the daily shipping capacity is 120 railcars for gasoline with a capacity of 2 600 tonnes per day 150 railcars for diesel fuel, with a capacity of 3 600 tonnes per day; and 270 railcars for fuel oil with a capacity of 6 700 tonnes per day. Lube oils are shipped by railroad tanks and 1, 2, 3, and 5 liters cans are shipped by truck.

Tank farm

Crude oil is stored in 15 floating roof tanks with 280 000 cubic meter total capacity. This is enough for a 15 day run at close to the refinery's maximum throughput. Table C.7.9.2 gives information about storage capacity for feeds, intermediate, and finished products.

Flares, blowdown and dropout systems

Three separate flare systems exist for the refinery, collecting safety valves discharge from the towers and vessels at high, medium, and low pressures. Each header is equipped with a 72 cubic meter condensate collecting vessel, 31 cubic meter hydraulic sealing, and flare stacks that are 1.1 meter in diameter and 60 meters in height. Collected condensate is pumped into intermediate gasoline tanks for reprocessing.

Fire protection

The fire protection system is designed by I.P.I.P. in accordance with regulations similar to US Code N.F.P.A. 15 120 cubic meters of fire fighting water is stored in nine tanks. A 5 000 cubic meter tank with a diesel engine driven pump is also available. Fire fighting water is distributed in a loop type header, at 1.4 MPa. Water monitors and hydrants are installed at maximum interval of 60 meters. Inside the buildings, hydrants are available on each floor.

Foam is provided by a central station and local chemical foam stations. Water sprinkling rings are installed on tank spheres and on main process columns. Loading racks are equipped with local foam generators.

A warning and alarm system, including gases and smoke detectors, telephone, and wireless communications provides for early warning and operations coordination. The refinery's fire fighting squad is equipped with all necessary fire fighting equipment and may be supported by military fire fighting units that are stationed near the refinery.

7.3. Chemicals and Catalysts Use

Tables C.7.3.1 and C.7.3.2 show chemicals and catalysts used by Petrotel.

TABLE C.7.3.1 - CHEMICALS

Name	Use
VIONIT CS-3	Ion Exchanger BFW Treatment
DOWEX SBRP	Ion Exchanger BFW Treatment
DOWEX MWA 1	Ion Exchanger BFW Treatment
DOWEX SBR PMB	Ion Exchanger BFW Treatment
DOWEX HCR S(E)	Ion Exchanger BFW Treatment
Caustic Soda	Ion Exchangers Regeneration
Sulfuric Acid	Ion Exchangers Regeneration
Sulfuric Acid (Fumans)	White Oils Manufacturing
Hydrochloric Acid	Ion Exchangers Regeneration
ICAR - POLIDOPOL	Cooling Water Treatment (Corrosion Inhibitor)
ICAR - TRIZIN	Cooling Water Treatment (Corrosion Inhibitor)
ETA - 75	Cooling Water Treatment (Biocide)
EDF	Cooling Water Treatment (Biocide)
Sodium Hypochlorite	Cooling Water Treatment
Iron Sulphate	Water Treatment
Lime	Water Treatment
INCOR 103P	Process Corrosion Inhibitor
ICI	Process Corrosion Inhibitor
ANTICOR C2	Process Antifouling Agent
SEPACOR HT	Process Corrosion Inhibitor
UNICOR LHS	Process Corrosion Inhibitor
E96	Crude Demulsifier
5A-SB Molecular sieve	Process N-Paraffins Separation
Aluminum Chloride	Process Catalyst for Paraflow Manufacturing
Ammonia	Process
Hydrazine	Boiler Water Treatment

TABLE C.7.3.2 - CATALYSTS

Application	Catalyst	Supplier
FCC	EKZK	Katalistics, Holland
Catalytic Reforming	R-50	Leuna-Werke, East Germany
Naphtha Hydrotreating	KONTAKT 8211	Leuna-Werke, East Germany
Kero, diesel hydrotreating	KONTAKT 8208 23-R-15	Leuna-Werke, East Ger. Vega, Romania
Lube hydrotreating	23-R-15	Vega, Romania
Gas desulfurization and sulfur recovery - H_2S conversion to sulfur	Activated alumina	Vega, Romania
Hydrogen generators - CO_2 conversion to methane	NiO	Craiova Chemical Works, Romania
Alkylation	Hydrofluoric acid	Tirnaveni Chemical Works, Romania
Merox	Desulfan	Codlea Chemical Works, Romania

7.4. Previous 12-month operating history

During the last 12 months, the Petrotel refinery operated at about 62 percent of its maximum throughput. This was caused primarily by the lack of hard currency to needed to import crude. The imported crude supply was 58.5 percent of normal capacity.

Lube oil manufacturing was also influenced by delay in commissioning the propane deasphalting unit. This unit was rebuilt after being severely damaged by explosion.

Lube oil production was only 72.5 of normal, despite the fact that the lube manufacturing line was fed at 92 percent which is close to the throughput of the two atmospheric and vacuum distillation units. This was due to poor mechanical condition of the process units (atmospheric and vacuum distillation, furfural extraction, dewaxing) and caused a serious lack of products on the local market.

The overall material balance shows high losses. This is associated with a low accuracy in crude products quantities measurements; important vapor losses, (two thirds of the intermediate naphtha and gasoline components are stored in cone type roof tanks discharging vapor into atmosphere) and with many shutdowns and startup operations that resulted from inconsistencies in the crude supply.

7.4.1. Recent modifications

There have been no significant modifications to the processing units or operations. The alkylation unit was shut down due to shortage of spare parts and corrosion. The normal paraffins separation unit was also shut down due to poor performance of the molecular sieve and will be restarted only after improved technology, that uses a new desorbent instead of steam which destroys the sieve will be in place. The replacement of ammonia compressors in dewaxing units is in progress.

7.4.2. Crude Oil Supply

The current crude supply consists of 65 percent imported and 35 percent domestic crude. The imported crude is delivered through Petrolexport S.A., while the domestic crude is shipped via pipeline from various oil regions of the country. The crude oil received at Petrotel from June 1990 through May 1991 was 1.1 million tonnes of domestic paraffinic crude selected for lube oils manufacturing and 2 million tonnes of imported crude. Maximum capacity is 1.5 million tonnes of domestic crude and 3.5 million tonnes of imported crude.

The domestic crude is a paraffinic crude oil with a 37° to 41° API gravity and a low sulfur content, 0.2 to 0.4 weight percent. The imported crude is an oil blend with a 27.5° API gravity and a sulfur content of 1.9 weight percent. Table C.7.9.3 shows the average crude oil properties.

7.4.3. Operating Experiences

The maintenance of the old, worn units including the furfural, dewaxing, deoiling and additives manufacturing, requires important manpower, spare parts, and has a negative impact on economic performance.

7.4.4. Impact of Crude Oil Changes

The lack of imported crude forced the refinery to frequently shut down and restart the process units. This results in energy and product losses and diminishes catalysts activity. Same additional negative impacts have come from changes in crude quality, which has been occurring too frequently to allow any operating optimization.

7.4.5. Impact of Product Market Changes

For the present, the market has not changed significantly and probably will not change in the near future. However, Petrotel will have to deal with competition of imported lubricants. Competition is closely related to the level of quality and product prices.

7.4.6. Impact of Legislation and Social Changes

Recent changes in legislation will result in new opportunities in the areas of crude and spare parts supply. However, this will force Petrotel to orient more toward foreign trade in order to ensure continued financing, and to cover the costs of additional revamping, especially for the lube manufacturing units.

Expected increases in environmental protection enforcement will have also an impact on operations, claiming improvements in emissions control.

The area personnel and staffing will require special care in order to achieve an equilibrium balance between productivity and unemployment.

7.5. Environmental Considerations

7.5.1. Quality of Local Environment

The Petrotel refinery is located on the east side of the city of Ploiesti and is only 6 kilometers from the center of the city. The refinery has been at its present location since 1904, but as it grew it became a large source of atmospheric and ground pollution.

7.5.2. Current Emissions Control

Gaseous effluents

The storage tanks for crude oil are of floating roof design. Both floating and cone roof tanks are used for product and intermediate storage. The cone roof tanks vent to the atmosphere. There is no equipment for vapor recovery from the tanks. A gas desulfurization and sulfur recovery plant has operated since 1979/80, but during the last 12 months it produced no sulfur. Flue gases from the refinery and power station are not treated.

Liquid effluents

Storm water from the tank farm, process area, roads, and roofs is collected and treated. Treatment consists of settling basins for the tank farm, roads, and roofs. Process area water is treated as industrial waste water. The lube oil complex area storm water is discharged to the purification station of Corlatesti. Teleajen River receives the water from the rest of the refinery. The waste water purification station processes the all of the water collected by the industrial and sanitary sewage system of the refinery using separators and chemical and biological treatment. Table C.7.5.1 shows waste water quality, after treatment.

TABLE C.7.5.2.1 WASTE WATER QUALITY

Item (mg/l)	Actual
TSS	30.0
COD (mg O_2/l)	100.0
BOD (mg O_2/l)	25.0
TOC (mg O_2/l)	9.0
Sulfur	0.2
Oil	9.0
pH	7.5
Flow rate (l/min)	30 000.0

Solid wastes

Bottom stills from tanks and units are discharged into the garbage pit at Ploiesti. Sludge from the separators of the refinery is transported to a pit outside of the refinery. Tars from acid refining are transported to a tar pit for storage. Na_2S and naphthenic lyes are shipped by railroad tank cars to customers, primarily paper manufacturers.

Sulfur management

A mass balance for sulfur was not determined. The gas desulfurization and sulfur recovery unit is of ICITPR design. The unit has operated since 1979/80 with a 3 000 tonnes/y capacity, but during the last 12 months due to a lack of amines, the refinery fuel gas desulfurization was operated at a low performance level. This resulted in the high sulfur content in the fuel gas, causing atmosphere pollution and a decrease in heaters efficiency by fouling of the air preheaters.

Volatile organic compounds (VOC) management

The refinery uses floating roof tanks for crude storage. There is no vapor recovery for the cone roof tanks which are used primarily for intermediate and product storage.

Heavy metal management

There are no special provisions for heavy metals control. Practically all of these leave the refinery in the finished fuel oils.

7.6. Refinery Specific Potential and Opportunities for Improvement

Improving the processing performances of the refinery would require the modernization of the lube oil processing units. The refinery is discussing the modernization program with I.P.I.P. S.A. as well as foreign companies. The design parameters would focus on the ability to process both Romanian and imported crude oil, the flexibility of the atmospheric and vacuum distillation unit, improvement of the vacuum performance by using structured packing, the use of rotating disks contactors (RDC) in the furfural extraction unit, and dewaxing-deoiling successively done in three stages with one single unit.

Cooperation with the French Institute of Petroleum is intended to lead to the process design of hydrotreating of paraffin and ceresin waxes and manufacturing of white oils by hydrotreating, instead of using sulfuric acid. Additives manufacturing facility will also be modernized to improve process control, products purification, and package type additives blending.

Petrotel has a leading position on the engine lubricants manufacturing and a pretty good supply of domestic paraffinic selected crudes for the coming years. This offers the possibility for favorable joint ventures with foreign investors.

The performance level of the catalytic reforming unit will be raised; and a revamping program, including continuous catalyst regeneration, is under discussion with the licensor (UOP).

The alkylation and n-paraffins separation units also need improvements in technology.

Returning to a normal desulfurization of fuel gases which claims to a radical change in amines supply policy will have a positive impact on the heaters efficiency and diminish air preheaters fouling. Better control of burning is also needed to improve the heaters efficiency. Heat exchange improved efficiency in crude preheating could diminish energy consumption as well as a better thermal insulation of the process equipment, pipes, and tanks.

7.7. Refinery Specific Problems and Trends

In the coming years, Petrotel has to restart the petrochemical units and to readjust the product balance to supply feedstock for those units.

One of the main problems facing the company is the rebuilding of its lube oil and additives manufacturing and blending units. The special position that Petrotel has on the local lubricants market should be a help in finding a partner investor for this operation.

The maintenance of the process units and auxiliary facilities needs an important financial and technical effort, mainly for the acquisition of spare parts or new equipment to replace the old, worn ones.

An expected decrease in domestic paraffinic crude oil supply will force Petrotel to think about new sources of imported crude and even take steps to orient the refinery to synthetic oils (as PAO) manufacturing.

The magnitude of the losses is a real problem for Petrotel. Solutions include vapor recovery from cone roof tanks, gases recovery from flares, reduction of leaks, and improved measurement accuracy. The cost of appropriate technical steps may be fully covered by the value of recovered products.

7.8. Reference to Database

The information contained in the questionnaire has been formatted into a computerized data base, which is the subject of a separate report.

7.9 Supporting Plant Data

TABLES:

C.7.9.1 - PRODUCT SPECIFICATIONS - C_3-C_4 CUTS
C.7.9.2 - PRODUCT SPECIFICATIONS - GASOLINES AND NAPHTHA
C.7.9.3 - PRODUCT SPECIFICATIONS - NORMAL PARAFFINS
C.7.9.4 - PRODUCT SPECIFICATIONS - JET FUELS
C.7.9.5 - PRODUCT SPECIFICATIONS - DIESEL FUELS
C.7.9.6 - PRODUCT SPECIFICATIONS - LIQUID FUELS
C.7.9.7 - PRODUCT SPECIFICATIONS - ASPHALTS
C.7.9.8 - PRODUCT SPECIFICATIONS - COKE
C.7.9.9 - PRODUCT SPECIFICATIONS - GREASES
C.7.9.10 - PRODUCT SPECIFICATIONS - CORROSION PROTECTION FLUIDS
C.7.9.11 - PRODUCT SPECIFICATIONS - METAL WORKING EMULSIFIABLE OILS
C.7.9.12 - PRODUCT SPECIFICATIONS - ADDITIVES FOR LUBRICANTS
C.7.9.13 - PRODUCT SPECIFICATIONS - LUBE OILS
C.7.9.14 - PRODUCT SPECIFICATIONS - LUBE OILS - continued
C.7.9.15 - PRODUCT SPECIFICATIONS - LUBE OILS - continued
C.7.9.16 - PRODUCT SPECIFICATIONS - LUBE OILS - continued
C.7.9.17 - PRODUCT SPECIFICATIONS - LUBE OILS - continued
C.7.9.18 - PRODUCT SPECIFICATIONS - WHITE OILS
C.7.9.19 - PRODUCT SPECIFICATIONS - N-PARAFFIN & CEREUS WAXES
C.7.9.20 - STORAGE CAPACITIES
C.7.9.21 - PROPERTIES OF CRUDES

TABLE C.7.9.1 - PRODUCT SPECIFICATIONS - C_3-C_4 CUTS

Specifications	Propylene I	Propylene II	Propane I	Propane II	C_3-C_3=	i Butane	ic_4-C_4=	n-Butane	nC_4-C_4=	LPG
Composition										
C_1 C_2 C_3 Vol % Max.	1	5	.5	5	3				nil	
Propylene Vol % Min.	92	70			27					
Acetylene % Max.	.003	.2				free				
Propylene % Max.			2	8						
Propane % Min.			92	85						
Propane % Max.	8	28			61	8 incl C_3=	1 incl C_3=	1 incl C_3=	.5 incl C_3=	12 incl C_3=
i Butane % Min.						80			7.5 i-butane +iC_4	
i Butane % Max.					3 iC_4^1= incl				7	
n Butane % Min.			2 all C_4	2 all C_4			39 nC_4	92	50 butane	87 all C_4
n Butane % Max.	.2				9 Butenes incl		9			
C_5+ % Max.						.5	.2	1	nil	
CO_2 % Max.	1									
H_2S - mg/Nm^3 Mercaptan Sulfur mg/Nm^3 Max.	.005	100	100	150	300 40	135	100	50	100	500
Water Content % Max.			.05	.05						
Vapor Pressure at 38 °C Bar Max.										7.5

TABLE C.7.9.2 - PRODUCT SPECIFICATIONS - GASOLINES AND NAPHTHA

Specifications	Regular	RON 90 Clear	Premium	Naphtha Pyrolysis	Naphtha Kal Reform
Density at 20°C Max.		.755			
RON Min.	87	90	95		
Distillation °C Max. at Vol %0	70	60	20	130	
50	125	120	125	140	
90	185	180	180	185	
EP	205	205	205		185
Reid Vapor Pressure Min. Kg Summer/Winter	500/600	450/550	500/600	500/	
Sulfur % Max.	.1	.1	.1	.08	.02
TEL Content ng/l Max.	.6	Clear	.6		
P6/A5 Content ppm Max.					.3/003

TABLE C.7.9.3 - PRODUCT SPECIFICATIONS - NORMAL PARAFFINS

Specifications	Light C_9-C_{13}	Heavy C_{14}-C_{15}
Saybolt Color, mm, Min.	25	
Boiling Range °C	180-230	185-310
Volume % Boiling up to 300 °C Min.	90	
Flash Point (Closed Cup) °C Min.	45	
Neutralization Number mg Koh/g Max.	2	
N-Paraffins Content Vol % Min.	96	
Aromatics Content Vol % Min.	1	5
Total Sulfur ppm Max.	15	50
Retractive Index		14 355
Bromine Number, g/100 mi, Max.		.55
Copper Strip Corrosion Test	1b	

TABLE C.7.9.4 - PRODUCT SPECIFICATIONS - JET FUELS

Specifications	Type T2	Type TH
Distillations, °C Max at Vol % IBP	150	
10	175	204
50	225	232
90	270	
EBP		288
Viscosity at 20 °C Cst Min.	1.5	
Cloud Point °C	-60	-53
Flash Point (Closed Cup) °C Min.	30	30
Sulfur Content % Max.	.1	.1
Sulfur as Mercaptan % Max.		.001
Aromatic Hydrocarbons Content % Max.	20	20
Smoke Point, mm, Min.	20	20
Absent Gums mg/100 ml, Max.	6	6
Lower Heat Value Kcal/kj Min.	10 250	10 250

TABLE C.7.9.5 - PRODUCT SPECIFICATIONS - DIESEL FUELS

Specifications	LD	-25	-15	-10	-5	+5	Marine	Marine Heavy
Density at 15 °C Max.								.97
distillation Vol % Min at 300 °C	55	48	48	48	48	48		
Viscosity at 20 °C Cst	2.5÷12	2.5÷12	2.5÷12	2.5÷12	2.5÷12	2.5÷12		
Viscosity at 37.8 °C Cst							12	245
Pour Point °C Max. Winter/Summer	-15	-25	-15	-10	-5	+5	+5/-5	
Flash Point °C Min.	55	65	55	60	60	60	66	66
Sulfur Content % Max.	.5	.5	.5	.5	.5	.5	1.5	3.0
Con Carbon on 10% Residue	.25	.40	.40	.40	.45	.45		
Con. carbon % Max.							.5	
Ash Content % Max.	.015	.015	.015	.015	.015	.015	.020	.100
Water & Sediment	nil	nil	nil	nil	nil	nil	.22	1.00
Copper Strip Corrosion Test	neg	neg	neg	neg	neg	neg	neg	neg
Cetane Number Min.	45	40	45	45	45	45		
Diesel Index							34	
Lower Heat Value Kcal/Kg	9 900	9 900	9 900	9 900	9 900	9 900	9 600	9 200

TABLE C.7.9.6 - PRODUCT SPECIFICATIONS - LIQUID FUELS

Specifications		Light 1	Light 2	P	M	40/42S	50/30S	70/42S	300/50S
Density at 20 °C Max.		.935	.940	.830	.870				
Viscosity Cst Max at	20 °C	33							
	50 °C	21	45			280	350	490	2100
	80 °C					63	70	84	385
	100 °C								140
Flash Point °C Max.		55	60	38	55	90	90	90	100
Pour Point °C Max. Winter/Summer		-8/÷5	0/+10			42	30	42	50
Sulfur % Max.		2.0	2.0	.1	.25	3.3	3.3	3.5	4.5
Con Carbon % Max.		5	8	.05	.2	14	14	16	25
Ash Content % Max.		.15	.2	.1	.25	.5	.5	.5	.5
Lower Heat Value Kcal/g Min.		9 650	9 500	10 000	9 800	9 400	9 300	9 200	9 200
Vol % Distilled up to °C Min.	200			18					
	250	10	5						
	300			98	50				
	350				90				

TABLE C.7.9.7 - PRODUCT SPECIFICATIONS - ASPHALTS

Specifications	IP85/100 Industrial	DP80/100 Road	E125 For Lacquer & Sealing	H82/92 Water Sealing	SP95 Protection of Underground Pipe
Softening Point R&B °C	85÷100	40÷49	125÷135	82÷92	95÷110
Penetration at 25 °C Min. $x10^{-1}$	5÷20	80÷120	min. 5	min. 10	15÷30
Ductility, mm, Min. at 0 °C		1			
25 °C		100		20	20
Breaking Point °C Min.		-15		-8	
Heating Stability (165 °C 5 Hours)					
Weight Loss %	-1.0	1.0		1.0	1.0
Penetration Drop %	40	30		30	40
Insolubility in CS_2 % Min.	99	99		99	99
Flash Point (open cup) °C Min.	260	240	260	250	230
Wax Content % Max.		4.0		2.0	2.2
Insolubles in Benzene % Max.			.5		
Ash Content % Max.			.5		
Solubility in Linseed Oil			100%		

TABLE C.7.9.8 - PRODUCT SPECIFICATIONS - COKE

Specifications	
Moisture Content & Max.	2
Particle Size over 10 Min % Max.	50
over 5 Min % Max.	20
Ash Content % Max	.5
Sulfur content % Max	.8
Volatile Compounds % Max.	11
Lower Heat value Kcal/kg Min.	8 200

TABLE C.7.9.9 - PRODUCT SPECIFICATIONS - GREASES

Specifications	U85 Ca3	U100 Ca4	U90 Ca1	U90 Ca2	U90 Ca1S	U90 Ca2S	U90 Ca1G
Drop point °C Min.	85	100	90	90	90	90	90
Penetration at 25 °C mm $x10^{-1}$	215÷255	170÷210	310÷350	270÷310	310÷350	270÷310	310÷350
Water Cont % Max	2.0	2.0	2.0	2.0	2.0	2.0	2.0
Free Alkaline as NaOH % Max.	.2	.2	.15	.15	.15	.15	.20
Neutralization Num mg/KOH/g Max.	nil	nil					
Suspended Solids % Max.	.4	.4	nil	nil	nil	nil	.4
Graphite Cont %Min							10
Ash % Max	2.5	2.5	2.5	2.5	2.5	2.5	
Carbon Steel Strip Corrosion Test	pass	pass	pass	pass	pass	pass	pass
Heat Stability 72 hr Min. Temp.	65	70					60
Colloidal Stability 3 g of Oil/100g	8	7					
Sulfur Content % Max.					.35	.35	

TABLE C.7.9.9 - PRODUCT SPECIFICATIONS - GREASES - continued

Specifications (Cont.)	L90 CaG	L95 Ca3/3G	UE88 CaEP GPb Zn Cu	Oil Pipes Thread Grease	E55 Ba Li5	U100 AR	Piston Ring Protection Grease
Drop Point °C Min.	90	95	88	80	55	100	40
Penetration at 25 °C mm x10^{-1} Min.	310÷350	200÷230			125÷175		280÷360
Water Cont % Max	1.0	2.0		2.0		2.0	.20
Free Alkaline as NaHO % Max.	.15	.15			.20	.20	.10
Neutralization Number mg KoH/g Max.							
Suspended Solids % Max.						.5	
Zinc Content %				15±1			
Ash % Max.	1.7	1.3			2.15		
Carbon Steel Strip Corrosion Test	pass	pass	pass	pass	pass	pass	pass
Heat Stability 72 hr Min. Temp.	60	60					
Colloidal Stability g of g of Oil/100g			5				
Graphite Cont %	15±1	10±1		15±1			

TABLE C.7.9.10 - PRODUCT SPECIFICATIONS - CORROSION PROTECTION FLUIDS

Specifications	UP1	UP7	P45	MOPL6	AR12	C2
Appearance	Oily, Dark, Clear	Oily, Reddish Brown, Opalescent	Homogenous Brown, After Heating up to 30°C and Stirring	Homogenous Brown		
Gravity at 150 °C				.840÷.890		
Viscosity Cst Min. at 20 °C						38 max
50 °C			20		12÷20	
100 °C						14÷20
Flash Point °C Min.	140	185	30	33		30
Neutralization Number mg KOH/g Min.	.5	2.0				2.5
Water Content %		15÷40		.1	free	free
Protective Film Thickness	7÷20	15÷40	20÷60	8 min		7
Copper Strip Corrosion Test		neg		1b		neg
Carbon Steel Strip Corrosion Test					pass	
Protective Capacity on Steel 72hrs/60 °C	good	good				good
Protective Capacity on Brass 3hr/100 °C	good	good				good

TABLE C.7.9.11 - PRODUCT SPECIFICATIONS - METAL WORKING EMULSIFIABLE OILS

Specifications	PE1A	PE1B	PE5	PE5EP
Density at 20 °C	.960max	.960max	.930÷.950	.930÷1.01
Viscosity Cst at 50 °C Max.	45	45	35÷45	30÷45
Pour Point °C	-12	-12	-10	-15
Water Content %	5	5	2.5÷3.5	2.5÷3.5
Storage Stability 72hrs at 70 ±2°C			No PHSE Separation Setting up or Sediment	
72hrs at 10 ±20°C				
5% Oil in Water Emulsion Stability 24 hrs at 25 °C	stable	stable	stable	stable
5% Oil in Water Emulsion pH	7.5÷8.5	7.5÷8.5	8.5÷9	8.5÷9
5% Oil in Water Emulsion, Corrosion on Cost Iron %	0	2		0
4 Ball Machine Test				
Max Load Without Welding N				1300
Wear Spot Diameter mm at 200N				.7

TABLE C.7.9.12 - PRODUCT SPECIFICATIONS - ADDITIVES FOR LUBRICANTS

Specifications	
Name	Function
P101	Antioxidant, Anticorrosive, Detersive
P110S	Antioxidant, Antiwear
P2A75	Antioxidant
P130	Antioxidant for High Temperatures
P212	Detergant, Dispersant, Overbasic (TBN150)
P201	Detergant, Dispersant
P301	Detergant, Dispersant
P302	Detergant, Dispersant, Antirust
P312	Detergant, Overbasic (TBN200, Ca Sulphenate)
P313	Detergant, Overbasic (TBN150, Mg Sulphenate)
P402D	V.I. Improver, Polymethylmetacrylate
P501	EP, Antiwear
P530	EP, Antiwear Package, Antioxidant, anticorrosive, antirust
P601	Ash dispersant
P621	Antirust

TABLE C.7.9.13 - PRODUCT SPECIFICATIONS - LUBE OILS

Specifications (Bearings, Lubricants)	Tb32	IC46	H46	Tb5B	H100	L100	L95
Grav at 15 °C Max	.890	.890	.895	.895	.910	.910	.910
Visc at 40 °C Cst	26.8 ÷ 33.5	41 ÷ 50	41.4 ÷ 50.6	52.4 ÷ 64.5	90 ÷ 110	90 ÷ 110	91 ÷ 102
Visc at 50 °C Cst	48.0			34.0			
Visc at 100 °C cst							
Visc Index Min.	90	90	95	90	90	90	80
Flash Point °C Min.	190	205	205	200	220	220	235
Pour Pt °C Max.	-3	+2	-16	0	-8	-8	-1
Emulsion Breaking Time, Minute	4			8			
Foaming Tendency Air, After 5 Min. at 24 °C					15		
Foaming Tendency Air, After 5 Min at 93.5 °C					15		
Foaming Tendency Air, After 93.5 °C Test 24 °C	0		15		15		
Foam Stability Air							
After 10 Min. 24 °C	0		0	0	0		
After 10 Min. 93.5 °C	0		0	0	0		
After 24 °C After 93.5 °C 24 °C	0		0	0	0		
Oxidation Stability Neutralization no. mg KOH/g Max.	.4			.4			
Ash Cont % Max.	.005			.005		.005	
Aniline Point °C Min.		96	95		95		
Con Carbon %		.08				.4	.01
Copper Strip Corrosion test			1b		1b		

TABLE C.7.9.14 - PRODUCT SPECIFICATIONS - LUBE OILS - continued

Specifications (cont.) (misc)	H41	L46	M30 Type N	L320	AVI 20	M20/ 20W Extra	M30 Extra
Density at 20 °C Max	.895				.897		
Density at 15 °C Max		.905	.005	.915		.900	.905
Visc at 40 °C Cst.		41.4÷5 0.6		288÷35 2			
Visc at 50 °C Cst	41÷49		61÷75				
Visc at 100 °C Cst Max	9.6	5.8			20	5.7÷9.6	9.6÷13
Visc Index	125	80	90	85		98	98
Flash Point °C Min	190	205	230	220	225	205	215
Pour Point °C Max	-25	-17	-12	+4	-18	-25	-20
Foaming Tendency cm^3 at 24 °C	30				30		
93.5 °C	30				30		
C 24°C After 93.5 °C 24 °C	30				30		
Foam Stability cm^3 at 24 °C	0				0		
93.5 °C	0				0	25	25
C 24°C After 93.5 °C 24 °C	0				0	300	300
4 Ball Machine Test, Wear Spot Diam at 200N	.5 Max						
Sulphate Ash %	.5÷75					1.5 max	1.5 max
Copper Strip Corrosion Test	1b						
Steel Strip Wet Corrosion	no rust traces						
Ash Cont % Max		.005	.005	.01	.005		
Con Carbon % Max		.2	.4	1.0	.45		
Visc at 18 °C Cst Max						10 500	
TBN mg KOH/g Min.						1.5	1.5

TABLE C.7.9.15 - PRODUCT SPECIFICATIONS - LUBE OILS - continued

Specifications (cont.) (Engine)	10W/30 Super 1	M20W 40 Super 1	DS-30	DS-40	MC-30	MG-30	T16A
Density at 20 °C max.	.895	.900	.910	.910	.910	.910	.900
Visc Cst at 18°C	2600 max	10 400 max					
50 °C			57÷68	76÷90			
100 °C	9.6÷11	13÷15	10.5	13	9.5-12.5	9.5÷12.5	16÷17.5
Visc Index Min.	115	115	90	90	85	85	
Flash Point °C Min.	180	205	210	215	220	220	200
Pour Point °C Max.	-25	-25	-20	-20	-20	-20	-20
TBN, mg, KOH/g, Min.	2.5	2.5					
Sulphate Ash % Min.	1.5	1.5	1.8	1.8	.5	.5	1.0
Foam Stability cm^3 at 93.5 °C	25	25	25	25	25	25	25
24°C aft 94°C	300	300	300	300	300	300	300
Ash Content % Max.							.005
Con Carbon % Max.							.4

TABLE C.7.9.15 - PRODUCT SPECIFICATIONS - LUBE OILS - continued

Specifications (cont.) (Engine)	M20/20 W Super 2	M20W/40 Super 2	M30 Super 2	M40 Super 2	LDE	M30 Super 3
Density at 20 °C Max.	.900	.910	.905	.910	.920	.910
Visc Cst at 100 °C	5.6÷9.3	14.5÷16.3	9.4÷12.5	12.6÷ 16.3	138÷152 at 50 °C	9.4÷ 12.5
Viscosity Index Min.	90	115	90	90	90	90
Flash Point °C Min.	216	210	220	230	220	210
Pour Point °C Max.	-25	-25	-20	-20	-20	-20
TBN Min.	6.0	6.0	6.0	6.0		9.0
Sulphate Ash % Min.	1.1	1.1	1.1	1.1	.7	1.7
Zn/P/Ca Content % Min.	.1/.1/.18	.1/.1/.18	.1/.1/.18	.1/.1/.1 8		.14/.1 4/.3
Foam Stability at 93.5 °C	25	25	25	25	0	25
24 °C after 93.5 °C	200	300	300	300	0	100

TABLE C.7.9.16 - PRODUCT SPECIFICATIONS - LUBE OILS - continued

Specifications (cont'd) (Marine)	NL30-8	NS40-25	NC50-70	NS40-12	NS50 Special
Density at 20 °C Max.	.905	.925	.925	.915	
Visc Cst at 50 °C	60÷75	90÷100	115÷150	90÷100	
100 °C	11	14	17	14	22
Viscosity Index Min.	90	90	85	90	
Flash Point °C Min.	720	230	225	230	240
Pour Point °C Max.	-20	-15	-15	-15	-20
Sulphate Ash % Min.	1.2	4.0	8.5	2.0	.6
TBN mg KOH/g Min.	8	25	70	12	
Zn/P/Ca, % Min.	.065/.055/.3	.045/.04/.9		.045/.04/.4	
Foaming Tend. cm^3 at °C					30
93.5 °C					30
C 24 °C after 93.5 °C					30
Foam Stability cm^3 at °C					0
93.5 °C					0
C 24 °C after 93.5 °C					0

TABLE C.7.9.17 - PRODUCT SPECIFICATIONS - LUBE OILS - continued

Specifications (cont.) (Gear)	T80EP	T90EP
Gravity at 15 °C Max.	.910	.915
Viscosity Cst at 100 °C	10÷11.5	16.5÷18
Viscosity Index Min.	85	85
Flash Point °C Min.	200	220
Pour Point °C Max.	-20	-20
Sulphate Ash % Min.	.4	.4
Zn/P/Ba/Chl Content, % Min.	.14/.14/.14/.14	.14/.14/.14/.14
Copper Strip Corrosion Test	2c	2c
Foaming Tendency, at 24/93.5/24 °C	30/30/30	30/30/30
Foam Stability, at 24/93.5/24 °C	0/0/0	0/0/0
4 Ball Machine Test - Min. Welding Load. N	1 300	1 300

TABLE C.7.9.18 - PRODUCT SPECIFICATIONS - WHITE OILS

Specifications		Cosmol	Medol	Medicinal
Density at 20 °C Max.		.860	.920	.860
Flash Point °C Min.			200	95
Viscosity Cst Min at	20 °C			20
	50 °C	14	20	
Stammer Color, mm Min.		270	270	
Mineral Acidity and Alkalinity		nil	nil	nil
Ash % Max.		.01	.01	.005
Cloud Point °C Max.		+12	+10	
Reducing Compounds		free	free	free
White oils shall be free from sulphur, saponifiables compounds, suspended solids, colorless, tasteless, odorless and meet food and drugs laws provisions.				

TABLE C.7.9.19 - PRODUCT SPECIFICATIONS - N-PARAFFIN & CEREUS WAXES

Specifications	56-68 I	56-68 II	58-62 I	58-62 II	Type 20 Cereus	Type 25 Cereus	Type 30 Cereus
Appearance	transp	transp	transp	opaque	lt yellow	yellow	lt yellow
Melting Point °C	56.1 ÷ 58	56.1 ÷ 58	58.1 ÷ 62	58.1 ÷ 62			
Dropping Point °C Min.					75	65	80
Oil Content % Max.	.6	2.5	.6	2.5	5.0	10.0	
Penetration, mm $x10^{-1}$ at 25°C Max.					20	25	30
Ash Content % Max.					.05		.05
Color Stability Days	7	4	7	4			
Color (s.u.w filter) Stammer	1.5		1.5				
Color (ww filter) Stammer		2.5		2.5			
Color ASTM					2.5	2.5	2.5
Mineral Acidity & Alkalinity	nil	nil	nil	nil	nil	nil	nil
Organic Solvent Insolubles	free	free	free	free	free	free	free

TABLE C.7.8.20 - STORAGE CAPACITIES

A. Feedstocks	Roof Type	No. of Tanks	Capacity m^3 (Total)
Crude Oil	F	15	180 000
Feedstocks for Additives	C	22	1 230
Feedstocks for White Oils	C	5	780
Process Solvents (Furfural, MEK, Benzene, Toluene)	C	14	2 800
Process Chemicals (Sulfuric Acid, Caustic, Ethylic Alcohol etc)	C	8	425
Other feedstocks are stored in 11 tanks, fixed roof type, 18200 m^3.			
B. Intermediate Products			
Naptha and Gasoline Components	F	12	26 000
	C	18	54 000
Kerosene	F	7	10 500
	C	12	11 000
Gasoils	F	6	17 000
	C	30	42 000
Fuel Oils	C	7	10 500
Base Lubes	C	39	21 500
Slack Waxes, Extracts	C	15	8 100
Additives	C	4	600
C. Finished Products			
C_3-C_4 Cuts for Petrochemistry	S	16	12 000
LPG	S	3	3 000
Gasolines & Naphtha	F	10	27 000
Kerosene	C	4	3 000
Diesel Fuels	C	5	33 000
Fuel Oils	C	8	32 000
Finished Lubes	C	24	10 100

TABLE C.7.9.21 - PROPERTIES OF CRUDES

	Domestic, Selected Paraffinic for Lube Manufacturing	Imported, Blended (Average Last 12 Months)
API Gravity	37÷41	27.5
Sulfur Content Wt. %	.2÷.4	1.9
Pour Point °C	39	-10
Viscosity Cst at 50 °C	3.45÷5.3	
Con Coke %	2.5	
W-N Characterization Factor	11.45	10.5
C_4 Wt % on Crude		.8
C_6 180 °C Naphtha - Wt% on Crude	23	18
Sulfur %	.02	.08
180-280 (Kero) Cut - Wt% on Crude	18	
Density C 15 °C	.800	
Sulfur %	.2	
280-350 °C (Diesel/Cut) - Wt% on Crude	10	
Density C 15 °C	.840	
Sulfur %	.3	
Pour Point °C	-10	
WN K Factor	11.6	
180-350 °C Cut (Kero + Gasoil) - Wt.%		22
Sulfur %		.5
350-530 °C (VGO) - Wt% on Crude	32	32.2
Density C 15 °C	.900	
Viscosity at 50 °C Cst	60	
Vacuum Bottoms (530+) Wt%	17	27

USAID

TERMS OF REFERENCE

DESCRIPTION/SPECIFICATIONS/WORK STATEMENT

Component #2: A PETROLEUM REFINERY EFFICIENCY IMPROVEMENT ENERGY CONSERVATION PROGRAM

1. BACKGROUND

The petroleum sectors of Bulgaria, Czechoslovakia, Poland, Romania, and Yugoslavia (as well as that of Hungary) are emerging from a 40-year period of centrally-planned crude supplies and centrally-controlled markets. Practically all of the petroleum refineries in these six countries were built, or modernized, during this period.

Among the five countries, it appears that Bulgaria has three separate refineries having an aggregate throughput of 300,000 B/D; Czechoslovakia has seven aggregating 455,000 B/D; Poland nine with an aggregate throughput of 385,000 B/D; Romania thirteen aggregating 617,000 B/D; and Yugoslavia seven with an aggregate capacity of 609,135 B/D. Now, these refineries face changing circumstances.

First, it is likely that the existing refineries were designed to process a narrow slate of crude oils supplied from the USSR. Now, crude supply options have broadened so that supplies can be bought on the world market through spot and contract purchases. The USSR appears to be phasing out as a primary crude supplier to these countries. Accordingly, potential future crude oil slates can have a much broader range of physical and chemical characteristics than has heretofore been the case.

Second, market conditions for the refinery product slates have been based on the principles of a centrally-planned national economy. Expectations, because of the shift to democratic pluralism in these countries, are for a higher standard of living for the populations, for a greater awareness of the need for environmental protection, and for shifts in refinery-product slates that will occur because of these. The capabilities of the mix of processing units in the refineries in each country to adjust simultaneously to changing crude slates and product slates will be brought into question.

Third, greater public awareness of preserving environmental quality and of the environmental deterioration that has occurred during the past forty years are likely to force major changes in refinery design and operating practices to reduce noxious gaseous, liquid, and solid waste emissions. This awareness is likely to emphasize production of unleaded gasolines and alcohol additives, and perhaps also the exploration of neat alcohol and compressed natural gas alternatives. At the same time, changes in refinery operations will be demanded to reduce noxious emissions to the extent practical.

Finally, tightened economic conditions will force refinery managements to improve operations through introducing more efficient internal utilization of energy and through implementing opportunities for energy conservation. These improvements will have to occur while anticipating changing crude and product conditions and with an inventory of processing units in the refineries that in all likelihood has a limited flexibility to adapt to changes. The roles for alternative fuels could emerge here also.

Compounding the problem of managing change are shortages of foreign exchange, increases in foreign exchange demands because of purchase of crude oil supplies on the open market at now greatly increased price levels, and demands on investment capital that will be generated by the political and economic changes in these countries. Foreign investment by international oil companies in petroleum-sector investment opportunities could bring needed foreign exchange and could potentially lead to new refinery construction at strategic locations and the scrapping of some existing refineries.

The complexity of the relationships within the petroleum sector system is somewhat illustrated in Figure 1 of this Appendix.

Obviously, managing the process of change will take some time. The inputs for analysis are not yet completely available. Economic benefits will depend on national policies, formed or as yet unformed. The current crude supply and pricing picture is an unstable one. Foreign investor interest in the five countries probably varies among the countries and perhaps is not yet well focused on the petroleum sector.

Nevertheless, a start in an analysis to improve the situation can be made provided the focus of initial efforts is on a rationalization of the petroleum-system situation in each of the five countries. Rationalization intends (a) efficient, effective, and environmentally-acceptable improvement in the production of petroleum products to serve current domestic markets, (b) adaptation of current operating practices to serve emerging domestic markets from expected, cost-attractive, crude-oil slates, and (c) identification of the improvements in terms of consistency with the privatization policies in each of the five countries.

2. GOAL AND OBJECTIVES

Accordingly, the generic goal of the work is to begin a process that ultimately can lead to such rationalization of the petroleum sectors in each of the five countries. The end results for the work at this time are

a. an organized data base comprising available data and information relevant to producing inputs for later use by others (when sufficient data and information for the

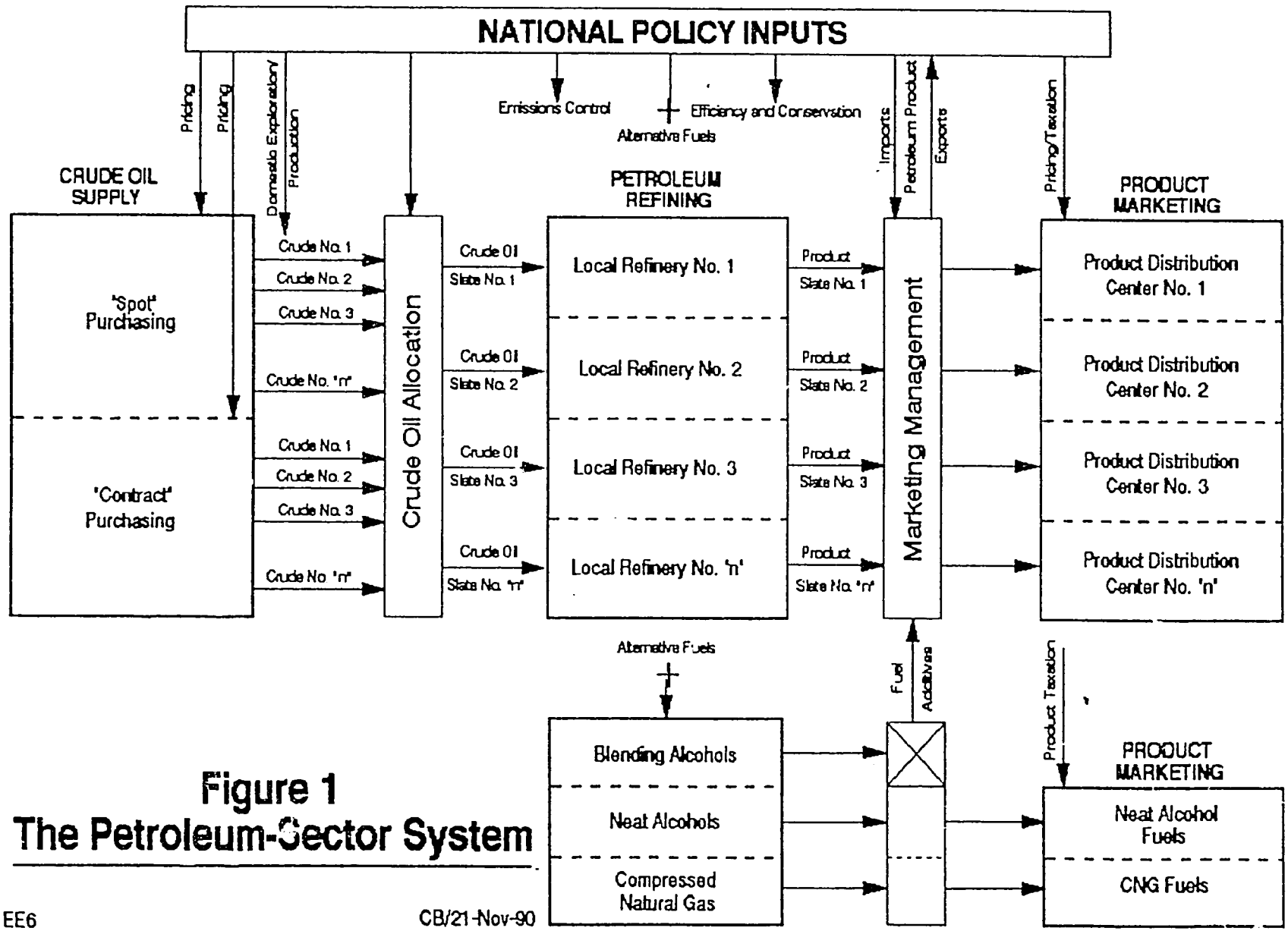

Figure 1
The Petroleum-Sector System

EE6

CB/21-Nov-90

various components of the petroleum system, such as is shown in Figure 1, become available) in a commercial linear programming model to optimize the petroleum system in each country,

b. low-cost improvements in the energy efficiency and environmental impact of selected refineries producing the current product slates that have been implemented during the course of the Contractor's work, and

c. the identification of further improvements which can only be implemented at a later time by others through making a significant investment that needs to be justified.

Accordingly, the objectives of the work focus on the five countries and are

a. for the refinery sector in each country and to the extent that relevant information is available, to describe the process mix in each refinery, the technical capabilities, and current operating practices in a form that (1) provides a data base for undertaking further and future work by others aimed at optimizing the petroleum system in each country and (2) more specifically for the present, enables at least qualitative judgments to be made of effects of changing crude-oil slates on refinery product slates;

b. for a sample of two refineries each in Czechoslovakia, Poland, and Yugoslavia and one refinery each in Bulgaria and Romania, to identify changes in operating practices and low-cost modifications to equipment that can be immediately implemented to increase the efficiency of energy utilization, to conserve energy by avoiding unjustified use, and to reduce as far as practical undesirable gaseous, liquid, and solid effluents;

c. for the same refinery selection in each country, to identify, characterize, and recommend more-extensive changes in practices and equipment and modifications to the process units, which appear justifiable but at the same time require further study possibly with inputs that may not yet be available; and

d. to assist the management of each refinery selected in each country, as needed, in the implementation of the changes identified in b. above through on-the-spot assistance (including training sessions for refinery personnel).

3. APPROACH

This work statement is intended to be generic and applicable in each of the five countries. The intent is to undertake the work with two separate teams of specialized personnel operating in parallel. One team will undertake the work in three countries sequentially and the other in the two remaining countries sequentially. The two teams will be supported as appropriate by a home-office team. The work of the three teams will be coordinated by a program director.

In order to permit pragmatic planning for efficient accomplishment of the work, the first activity will be a reconnaisance in the five countries, probably lasting five weeks, during which needed technical and administrative inputs will be developed and needed local support arranged for. In order to gauge the effectiveness of the work, the final activity will be return visits to the five countries, probably over a two week period when the final reports have been submitted, for the purpose of discussing the results and answering questions that may arise.

The expectations are that considerable data and information will be collected for the countries and for the operating oil refineries. Also, expectations are that this data base, aside from the needs of the Contractor's work program and even after the completion of his work, can provide continuing inputs to other efforts aimed at improving operations in the non-refinery components of the petroleum-sector system (see Figure 1) or to follow-on efforts aimed at implementing the longer-term improvement opportunities identified in the work. Therefore, data and information collection is to be computer oriented with programs organized to be user-friendly and documented accordingly in the Contractor's final reports.

Furthermore, in the identification of improvement opportunities relevant to achieving the objectives of the work, expectations are that benefit/cost estimates will be prepared and/or evaluations performed as far as practical. Estimates and calculations will, with little doubt, require assumptions to fill in for a lack of data. Therefore, estimate preparation and evaluation of opportunities is also to be computer-oriented and user-friendly with programs designed to permit asking "what if" questions, with documentation incorporated in the Contractor's final reports.

Petroleum refineries and petrochemical manufacturing plants are closely linked both physically and through refinery products that become petrochemical feedstocks. The work shall be confined to petroleum refineries only. For this purpose the refinery shall be defined as comprising all

installations that pertain to the receipt of the crude oil through to processing and storage of the refinery's primary products. A primary product shall be defined as one that has been fully processed so as to be marketable. On-site facilities to blend different gasoline streams, produce, and process them to final specifications are refinery units. Refinery gas and/or liquid streams that are delivered to other units for further processing, such as to ethylene, ammonia, or aromatic extraction, are to be considered as finished products.

Equipment purchases (both for test work and for permanent installation) needed for the implementation of short-term improvements shall be defined and justified. A brief report shall be submitted for A.I.D. approval before committing to purchase.

4. TASKS

The following tasks are foreseen for the work.

a. Refinery Characterization

The work is technically oriented. It involves preparing for each refinery in each country, a block flow diagram showing the processing units and the support facilities between receipt of the crude oil slate and the dispatch of the product slate to market. The depth of detail for this characterization will provide

1) a description as far as practical of the capability of each processing unit in terms of feedstocks and feedstock variability and product yields and specifications; of the operating conditions, age, mechanical condition of the processing units; of the consumption of utilities (electricity, water, catalysts, chemicals, etc.); and of the quantities and characteristics of the effluents.

2) a description as far as practical of the support facilities in terms of crude and product storage capacity, fire protection and personnel safety provisions, and methods for segregation, collection, treatment, and disposal of solid, liquid, and gaseous effluents.

3) a written operating history of a refinery for the previous 12-month period emphasizing crude-oil receipts and specifications, product slates produced, unusual operating experiences, routine maintenance performed, and emergencies encountered during operations.

4) a description of the method of electricity supply, whether entirely purchased, self-generated, or a combination of both; and a technical description of the design and operation of the power house (if any) in terms of energy balance and heat rate.

b. Refinery Financial Structure

The objective in this task will be to collect data on local practices from the refinery management and/or from other appropriate sources that can be evaluated to establish the basis whereby the cost of each improvement opportunity can be pragmatically estimated and attractiveness of the opportunity determined. The expectation is that attractiveness will be based in part on (a) the magnitude of the capital requirement, including the foreign exchange component, and (b) the period of time within which the cost of the improvement can be recovered through savings in operating costs achieved. Attractiveness shall refer also to quantification (if practical) of benefits from reduced emissions of objectionable effluents. No need exists to relate emissions for compliance with any existing standards.

c. Selection of the Refineries

The refineries to be subjected to more detailed study, in order to meet Objectives b, c, and d above, shall be selected during the reconnaisance period by mutual agreement between the Contractor and the host-government agency concerned. For Contractor's guidance, the main criterion for selection should be based on achieving a maximum efficiency/environmental improvement impact for a minimum effort and cost in a minimum time frame. However, the selection shall be subject to A.I.D. concurrence.

d. Refinery Housekeeping

For each country and for each selected refinery, the work involves observation over a period of time of the refinery operations in order to detect opportunities to improve operating and maintenance practices, such as by

1) eliminating the presence of leaky valve-stems and steam traps,

2) incrementally insulating excessively hot surfaces,

3) avoiding poor combustion conditions (high oxygen content in chimney gases because of excessive excess air beyond combustion needs and/or leaky furnace settings),

4) avoiding excessive carbon monoxide in chimney gases (poor combustion, inadequate mixing of fuel and air),

5) increasing the frequency with which heat transfer surfaces are cleaned of fouling deposits,

6) reviewing whether rotating machinery is adequately maintained in terms of lubrication and condition of bearings, and

7) reviewing whether plant instrumentation is adequate and/or well-enough maintained to provide accurate readings of operating conditions and is appropriately configured to permit efficient operation.

e. Heat Conservation

The work involves observations over a period of time to evaluate the adequacy of provisions to recover heat that otherwise is wasted. The best example is a lack of airheaters to recover heat from hot chimney gases in refinery furnace equipment. Another example is the design of feedstock preheat heat exchanger trains and the opportunity to introduce an additional heat exchanger that can be justified now because of higher energy prices.

f. Process Unit Operating Conditions

The work involves analyzing the operating conditions and control systems installed for each processing unit in a selected refinery in order to determine whether these are appropriate for the products from the feedstock. This analysis can be particularly significant if current feedstocks and/or product slates have changed from the conditions on which the original design of the processing unit was based.

g. Refinery Energy Balance

The work involves analysis of the flows of energy among the different processing units comprising each selected refinery as well as within the processing units themselves in order to identify opportunities for energy-efficiency improvement in the short term and long term.

The analysis should attempt to provide a data base to assist others to foresee the longer term opportunities for a more efficient energy balance through review of the market demand, future crude oil supplies, and the design and applicability of the processing units themselves. Ultimately, the product of such analysis by others could be decisions to abandon certain units, modify others, or add new units, all providing for greater thermal efficiency.

Accordingly, the Contractor shall attempt to foresee as far as practical the prospect that such future analysis could invalidate the benefits perceived for an identified long-term opportunity from a presumption that a substantial remaining useful life for the process unit exists.

h. Fuel Switching

For each selected refinery, the work shall include comment and expert opinion on the practicality of replacing petroleum hydrocarbon fuels with indigenous coal. Refinery furnaces have in the past been fired with coal. Fuel switching to coal to save on oil imports could be a viable option. However, the Contractor shall focus on a different technical option for coal utilization, in order to reduce investment, by considering high fuel-density, coal/water slurry fuels as a direct replacement for fuel oil with minimum retrofit. Sootblowers could handle the higher ash content.

Consideration of such an option should be limited to assessing its practicality in terms of coal supply and characteristics, the state-of-the-art of fuel formulation, and adaptability to existing combustion equipment.

i. Refinery Emissions

For each selected refinery, the work involves preparing a survey of all solid, liquid, and gaseous refinery effluents in terms of sourcing, probable quantities, and chemical analyses, and suggesting practices to be employed in the refinery for control to reduce such emissions that reflect experiences elsewhere where emission control laws are in effect. There is no need to relate this task to showing compliance of emissions with standards that may be established by the World Bank or the U.S. Environmental Protection Agency.

j. Data Evaluation

The work involves computer-oriented organization of the data and information collected, evaluation of the data and information, compiling cost estimates, performing financial calculations, ranking opportunities in terms of the adopted criteria, and preparing final reports to meet the objectives of the work.

APPENDIX C INSTRUMENTATION

General Situation

For many years the importation of foreign made process control instruments was almost totally prohibited. Also, an extremely limited amount of hard currency was allowed for the purchasing of spare parts. This lack of spare parts for the imported instruments has resulted in an accelerated rate of instrument wear, which would in turn lead to the following consequences:

A. A particular group of identical instruments cannot be repaired due to lack of spare parts. These instruments would then be disconnected from the process control and their functions would be transferred either to manual control or, sometimes, would not be performed at all.

Examples: Imported oxygen analyzers were originally installed on many process heaters. Within two - three years after their installation no spare parts were available. The analyzers were mostly abandoned in place and since then no continuous measurements of excess oxygen have been made. Another example: an imported LEL (Low Explosion Level) detection system has over 90% of the detector cells inoperative, and even portable analyzers for explosive gases are not functional due to the lack of spare parts. Since the LEL detection system cannot be replaced by a human operator, the detection of explosive levels is not done at all, thereby significantly increasing the probability of a serious accident.

Due to the lack of spare parts, many process connected analyzers were abandoned in place. Sampling is currently made manually, and an analysis is made in the refinery's laboratory. As a result, it is impossible to continuously monitor the effected streams. The time required for a lab analysis can be up to 3-4 hours. This represents lost opportunities, should the analysis result in the need for a change in operations.

The crisis with some of the spare parts for imported instruments has been partially resolved by making the spare parts in the refinery's instrument repair shops. This has allowed certain types of imported instruments to be operated for years. However, according to the Romanian engineers, some vital spare parts cannot be manufactured in their shops. Consequently, this approach would appear to limit instrument operation on certain units in 1991-92. If these instruments are not replaced within this

period, the units equipped with imported instrumentation may have to be shut down. It should be noted, that availability of hard currency would not solve the problem entirely, since spare parts for some of these obsolete instruments are no longer available from the original equipment manufacturer.

B. Another solution was to create a domestic instrumentation industry. Currently, there are several domestic manufacturers of various general types of instrumentation: transmitters for pressure, differential pressure, level displacer transmitters, bi-metallic thermometers, pressure gauges, panel mounted controllers, multi-pen recorders, and some others. Most of these instruments are produced on a license agreement with such western companies as Foxboro and Kent. These instruments are behind the modern generation of instruments by at least 20-25 years. Also, unlike their original counterparts, the domestically manufactured instruments are much less reliable and their performance may be considered satisfactory only because there is no better available choice in Romania. Unfortunately, the Petrobrazi and Petrotel Refineries have not conducted statistical analysis of their instrument failures and a mean time between failures itemized each type of instrument is not available.

The instrument personnel seemed to be totally immersed in the daily routine of incessant efforts to keep their refineries running regardless of the cost. They do not have time to analyze their situation and find more efficient ways of operation.

Most of the following information was obtained by observations of several units' instrumentation and from the Refinery Automation Department personnel.

Calibration and maintenance

According to Romania's Government regulations, the following schedule for instrument calibration shall be complied with:

Thermocouples and RTD's - once every two years;
Field transmitters P, dP and Flow - once a year;
Level transmitters - once every two years;
Controllers - once every two years;
Recorders - once a year;
Conductivity and pH analyzers once a year;
Orifice plates (dimensional check only) - once every two years;
Oxygen analyzers - once a year.

Necessity usually incrases the frequency of these schedules. The claimed accuracy of the transmitters is ± 0.5%. Same of the orifice plates ± 1.0%, and the average accuracy of the control loop is ± 1.5%.

On the other hand, the refinery engineers stated that currently they do not have an adequate numbers of highly skilled workers to provide for high quality maintenance, especially preventative maintenance.

Transmitters are mounted in the fiberglass enclosures. Quite often the covers of these enclosures are missing. In winter this reduces the efficiency of heat tracing and could lead to malfunctioning.

It should be noted that less than 20% of all the Low Explosion Level detectors installed on the Units are operating. The main reason for this has been the lack of spare sensing cells. Almost all of the LEL-Detectors used were manufactured by Bacharach (U.S.). Considering the operating and maintenance status of control rooms and of other equipment, it is imperative that the Refinery replace all defective sensor cells so as to reduce the danger of fire and explosion. However, the Refinery does not have hard currency to purchase the sensor cells.

Although the LEL-Detectors are not instruments that help to improve energy efficiency and / or reduce pollution, it is recommended that Petrotel Refinery should be supplied with the above sensors as an urgent safety measure to reduce the possibility of a major fire and / or explosion.

Laboratory analyzers

The Refinery has wide variety of analyzers in their laboratory. The instruments are being maintained in operating condition.

A special schedule of taking samples is maintained. Field samples are normally taken at an interval of about four hours. The time required to finalize each analysis is on average between 3 and 4 hours. An Orsat analysis of the flue gases is made once every 24 hours.

Process heaters

The Refinery has many heaters. Most heaters have capacity well over 12 Gcal/Hr and are not equipped so as it required to achieve high energy efficiency.

Oxygen analyzers have been installed on some of the heaters, however the analyzers are used for indication only. As it was stated, most of the oxygen analyzers are in satisfactory working conditions. However, these analyzers are not based on zirconium oxide sensor and, therefore, are high maintenance instruments.

Two problems related to the oxygen analyzers should be pointed out. First problem is related to the frequency of calibration. Currently these analyzers are calibrated once a year, which is in compliance with Romanian regulations. However, in order to insure adequate accuracy and eliminate drift the instruments should be calibrated much more often. Second problem is that most of these analyzers were manufactured in East Germany, and it is very likely that production of these analyzers was discontinued due to general restructuring of what used to be GDR.

There is a great potential for improving energy efficiency of process heaters by implementing modern control instrumentation and modern control strategy. However, it could be done only if the heaters would be modernized mechanically and equipped with additional instruments such as draft transmitters, combustion temperature transmitters, air and fuel flow transmitters and additional thermocouples. Currently, the heaters do not have air/fuel ratio control and this type of control cannot be fully implemented since the heaters do not have power operated dampers for combustion control. Also, burners on all of the heaters with the exception of two or three heaters are obsolete and are not equipped with flame detectors. Therefore, to implement modern combustion control strategy on the heaters would require extensive revamping.

Also, the fuel flow to each individual heater is not measured and not totalized. Although the instruments for such measurements are in place, only total consumption of fuel for the group of heats at each unit is measured. The reasons for such an approach were not given. However, it is suggested that the Refinery would have been able to improve the heaters' efficiency had it measured fuel consumed by each heater separately.

Other equipment

Heat exchanger trains operation monitoring is not adequate. Most heat exchangers have only local bi-metal thermometers installed. The temperature is often measured only in two points, whereas monitoring of the temperature (and pressure) in four points would give much a better idea of each exchanger operation. Only some of the heat exchangers have thermocouple temperature elements which send the signals to the related control room. There is no special instrumentation which would permit to maximize energy savings by optimizing heat exchanger trains control.

The atmospheric and vacuum distillation systems still have their original control systems, which have not been revised to improve energy efficiency. Planning for full modernization is under strong consideration and some discussions are presently being made with foreign companies.

Heat tracing

Due to some design oversight, there is no dependable dedicated return line for heat tracing steam. Currently steam from many heat tracing loops is released to atmosphere. This practice creates intolerably high losses of energy.

Tank farm management

The tank farm has between 100 and 120 atmospheric tanks for various products. Levels in the tanks are monitored by the ENRAF "Nonius" system (The Netherlands), accuracy ± 1.0 mm.

The tanks are divided into five groups, the level data are multiplexed and transmitted to a dedicated control room. Temperature in the tanks is not measured. Operator can retrieve a specific tank level measurement using a keyboard. Tank loading and unloading are manual. This system has operating problems.

LPG tank farm has 35 spherical tanks. (See Weigh Stations - Section F.3.7.)

Custody transfer

Besides rail transport shipments which are passing through the weigh stations, the refinery receives most of its crude by pipeline. The refinery does not buy the crude directly from suppliers. The crude pipeline from port of Constanta is operated by a specialized company, ITTC, which through several branches of pipeline, delivers crude to several refineries located in the immediate area. This company is responsible for the pipeline operation. Another company, CHIMPEX, deals directly with oil tankers. CHIMPEX is located in Constanta, with receiving tanks of its own. According to the information obtained from the refinery, CHIMPEX never stores the crude from any given tanker in dedicated tanks. The crude is routinely pumped into any available receiving tank. Consequently, the refinery is always getting mixtures of various crudes, complicating fractionation and energy efficiencies. The crude's mixture parameters vary widely from one transfer to another.

The transfer between a tanker and CHIMPEX's receiving tanks is accomplished without the refinery's participation. The received crude is measured by tank level by a CHIMPEX employee, who also makes the calculations that account for tank geometry, temperature, specific gravity, etc. CHIMPEX then settles the transfer with the oil tanker representatives.

The transfer of crude to the refinery is as follows: the dead stock level in the tank assigned for receiving is usually about 70 cm. It is measured manually by the representative of ITTC (CHIMPEX is not involved) and by a refinery employee, each has level and temperature instruments of their own. After the dead stock level has been verified, the pumping starts. Usually the tank is filled to the 12 meter level. The crude is left for 24 hours to settle. Then the separated water is pumped out and both representatives remeasure and recalculate. After that, the crude becomes the property of the refinery. A similar, if not identical, procedure is followed when transferring products from the refinery.

This type of custody transfer is cumbersome and susceptible to excessive errors. The refinery administration is very much interested in alternative techniques of custody transfer, especially in a transfer based on precise measurement of the flow.

It is suggested that a precision flow measured custody transfer system should be analyzed including an accounting for the cost of the equipment, its installation, calibration, maintenance and also for possible losses of hard currency due to the inadequate accuracy of the present measurements of incoming crude and the refinery products which are shipped out by pipeline, as well as considering future likely increases in the price of crude oil and refinery products.

With good maintenance and accurate calibration the precision flow meters provide higher accuracy and repeatability than tank gauging. An accuracy of 0.15% or even 0.1% is readily achievable. The cost of a custody transfer station with a capacity of 3.5 million tonnes/y is high. However, improvement in the accuracy of measurements of received crude by 0.1% amounts to 25 666 barrels per year. This shows that the pay off time for the proposed system may be no longer than two years. There are many other advantages, including direct transfer of the crude, which could be realized, if precision flow meters are used for the custody transfer.

Depending on the required maximum flow of the liquid, the custody transfer station should have several positive displacement meters and / or turbine meters with the related pipe runs, valving and crude oil filtering. It also should have instruments for measuring the temperature and density of measured liquids. Also needed for crude oils are a sampling system with intermittent or continuous on-line monitoring of bottoms, sludge and water.

In order to calibrate the flow meters on regular basis, the custody transfer installation will need spare flow meters. It is also recommended that either a stationary meter prover or the installation design be such, that a transportable meter prover would have access to all of the meters. Also, there is an alternative to meter provers in Romania: namely, the Flow Laboratory in Pascani. With some modifications and upgrading this Laboratory could be used as a center for the custody transfer flow meters calibration. This alternative would require more spare meters.

Flares

Visual observation of flares at the Petrotel Refinery showed that flares are almost constantly burning producing significant amount of smoke.

There is no automatic control of steam admitted to flares. The steam flow adjusted manually from a dedicated control room based on amount of smoke in the flare flame. The flow of flare gases is not measured, and their chemical composition is not analyzed.

Table AP-D.1.a - PROCESS POWER CONSUMPTION

#	Plant	Schedules Specific Consumption (kWh/t)	June 1990			July 1990		
			Throughput (Processing) Tonnes	Achieved Electric Power Consumption (mWh)	Achieved Specific Consumption (kWh/t)	Throughput (Processing) Tonnes	Achieved Electric Power Consumption (mWh)	Achieved Specific Consumption (kWh/t)
1	AD1	2.40	36 568	88	2.40	11 968	29	2.42
2	ADV1+2	3.36	93 285	313	3.35	104 716	388	3.70
3	ADV3	3.36	156 230	525	3.36	299 068	1 047	3.50
4								
5	DV1	0.60	15 997	10	0.62	2 258	1	0.44
6	Petroleum Refining	0.15	81 621	13	0.16	62 378	10	0.16
7	Oil Refining	0.59	317	-	-	329	-	-
8	White Oil	5.50	292	1	3.42	212	1	4.72
9	Greases	7.80	719	5	6.95	605	5	8.26
10	Mixture-finishing Products Delivery (MFPD) Old Refinery	0.88	25 857	23	0.89	1 216	1	0.82
11	Furfural Solventation 1+2	4.70	20 970	99	4.72	19 547	92	4.71
12	Dewaxing 1+2	83.00	18 197	1 510	82.98	17 303	1 436	83.00
13	Deoiling	154.00	3 213	495	154.10	3 176	489	153.90
14	Wax	21.50	883	19	21.50	900	19	21.10
15	Oil Hydrofining	15.60	8 813	130	14.75	10 074	157	15.58
16	Contact	9.06	88	1	11.36	976	9	9.22
17	Acid Refining	1.12	308	-	-	312	1	3.20
18	H_2 Plant	1 250.00	135	169	1 252.00	135	169	1 251.80
19	MFPD	0.88	93 285	82	6.88	104 716	92	0.88
20	Additives	-	-	-	-	678	12	17.70
21	Catalytic Reforming	8.23	9 780	81	8.28	31 170	281	9.01
22	Petroleum Gas Oil Hydrofin.	16.10	1 575	25	15.87	42 836	741	17.29
23	Gasoline Hydrogenation	28.00	12 558	352	28.00	37 787	1 096	29.00
24	Gases Fractionation	14.40	1 141	16	14.02	7 913	[illegible]	15.03
25	Normal Paraffin Separation	370.00	98	36	367.30	-	-	-
26	MFPD-DRT	0.88	156 230	138	0.88	299 068	263	0.88
27	Catalytic Cracking	54.20	53 874	2 920	54.20	90 384	5 899	65.26
28	Alkylation	36.50	3 224	117	36.29	6 937	253	36.47
29	Asphalt	4.10	1 754	7	3.99	1 690	8	4.73
30	Coking	25.58	23 407	599	25.59	28 107	815	29.00
31	Gases Desulfurization Sulfur Recovery	10.50	6 809	71	10.40	15 754	159	10.09

Table AP-D.1.b - PROCESS POWER CONSUMPTION - continued

#	Plant	Schedules Specific Consumption (kWh/t)	August 1990			September 1990		
			Throughput (Processing) Tonnes	Achieved Electric Power Consumption (mWh)	Achieved Specific Consumption (kWh/t)	Throughput (Processing) Tonnes	Achieved Electric Power Consumption (mWh)	Achieved Specific Consumption (kWh/t)
1	AD1	2.40	35 621	95	2.67	21 073	51	2.42
2	ADV1+2	3.36	94 380	349	3.70	86 511	320	3.70
3	ADV3	3.36	220 000	1 482	6.74	197 205	1 286	6.52
4								
5	DV1	0.60	15 176	15	0.99	5 829	3	0.51
6	Petroleum Refining	0.15	31 161	5	0.16	53 529	9	0.17
7	Oil Refining	0.59	-	-	-	-	-	-
8	White Oil	5.50	203	1	4.93	241	1	4.15
9	Greases	7.80	744	6	8.06	498	4	8.03
10	Mixture-finishing Products Delivery (MFPD) Old Refinery	0.88	25 620	23	0.90	8 620	8	0.93
11	Furfural Solventation 1+2	4.70	18 849	89	4.72	15 371	73	4.75
12	Dewaxing 1+2	83.00	16 733	2 147	128.30	12 531	449	154.00
13	Deoiling	154.00	2 944	456	155.00	2 916	449	154.00
14	Wax	21.50	965	40	41.40	951	21	22.08
15	Oil Hydrofining	15.60	9 653	151	15.64	4 564	83	18.18
16	Contact	9.06	-	5	-	-	4	-
17	Acid Refining	1.12	-	-	-	-	-	-
18	H_2 Plant	1 250.00	142	177	1 246.40	115	144	1 252.17
19	MFPD	0.88	94 380	83	0.88	86 511	76	0.88
20	Additives	-	672	166	247.00	677	99	171.80
21	Catalytic Reforming	8.23	38 973	351	9.00	20 733	187	9.02
22	Petroleum Gas Oil Hydrofin.	16.10	52 082	924	17.74	20 054	400	20.00
23	Gasoline Hydrogenation	28.00	67 405	1 955	29.00	25 147	729	29.00
24	Gases Fractionation	14.40	11 770	176	14.90	5 543	83	14.97
25	Normal Paraffin Separation	370.00	29	10	344.80	10	3	300.00
26	MFPD-DRT	0.88	220 000	194	0.88	197 205	173	0.88
27	Catalytic Cracking	54.20	88 362	4 788	54.20	58 950	3 595	61.00
28	Alkylation	36.50	5 552	203	36.56	-	7	-
29	Asphalt	4.10	1 063	5	4.62	791	4	5.06
30	Coking	25.58	52 808	1 531	29.00	27 561	799	29.00
31	Gases Desulfurization Sulfur Recovery	10.50	13 360	135	10.10	5 239	53	10.10

Table AP-D.1.c - PROCESS POWER CONSUMPTION - continued

#	Plant	Schedules Specific Consumption (kWh/t)	October 1990			November 1990		
			Throughput (Processing) Tonnes	Achieved Electric Power Consumption (mWh)	Achieved Specific Consumption (kWh/t)	Throughput (Processing) Tonnes	Achieved Electric Power Consumption (mWh)	Achieved Specific Consumption (kWh/t)
1	AD1	2.40	6 479	15	2.31	17 143	65	3.79
2	ADV1+2	3.36	77 085	285	3.70	66 666	247	3.70
3	ADV3	3.36	159 315	969	6.08	215 170	1 317	6.12
4								
5	DV1	0.60	-	-	-	1 363	6	4.40
6	Petroleum Refining	0.15	26 903	4	0.15	61 639	10	0.16
7	Oil Refining	0.59	-	-	-	-	-	-
8	White Oil	5.50	125	1	8.00	289	2	6.92
9	Greases	7.80	572	4	7.00	742	6	8.09
10	Mixture-finishing Products Delivery (MFPD) Old Refinery	0.88	-	-	-	8 664	7	0.81
11	Furfural Solventation 1+2	4.70	17 900	84	4.69	12 041	57	4.73
12	Dewaxing 1+2	83.00	10 430	1 552	148.10	9 213	1 507	163.60
13	Deoiling	154.00	2 569	270	105.10	2 491	164	65.84
14	Wax	21.50	694	15	21.60	628	14	22.29
15	Oil Hydrofining	15.60	5 529	86	15.55	4 035	63	15.60
16	Contact	9.06	-	-	-	-	-	-
17	Acid Refining	1.12	-	-	-	-	-	-
18	H_2 Plant	1 250.00	107	134	1 252.30	68	85	1 250.00
19	MFPD	0.88	77 085	68	0.88	66 666	59	0.88
20	Additives	-	588	103	175.17	583	102	174.90
21	Catalytic Reforming	8.23	18 471	166	8.99	19 803	178	8.99
22	Petroleum Gas Oil Hydrofin.	16.10	23 953	515	21.50	10 032	279	27.80
23	Gasoline Hydrogenation	28.00	20 821	604	29.00	23 616	685	29.00
24	Gases Fractionation	14.40	4 145	62	14.96	3 563	53	14.87
25	Normal Paraffin Separation	370.00	10	4	400.00	-	-	-
26	MFPD-DRT	0.88	159 315	135	0.85	215 170	183	0.85
27	Catalytic Cracking	54.20	45 702	2 886	63.15	51 900	3 226	62.15
28	Alkylation	36.50	2 304	84	36.46	2 664	97	36.41
29	Asphalt	4.10	1 101	5	4.54	1 117	6	5.37
30	Coking	25.58	20 408	531	26.01	12 772	399	31.24
31	Gases Desulfurization Sulfur Recovery	10.50	3 389	34	10.03	4 715	48	10.18

Table AP-D.1.d - PROCESS POWER CONSUMPTION - continued

#	Plant	Schedules Specific Consumption (kWh/t)	December 1990			Schedules Specific Consumption (kWh/t)	January 1991		
			Throughput (Processing) Tonnes	Achieved Electric Power Consumption (mWh)	Achieved Specific Consumption (kWh/t)		Throughput (Processing) Tonnes	Achieved Electric Power Consumption (mWh)	Achieved Specific Consumption (kWh/t)
1	AD1	2.40	19 140	66	3.45	2.30	18 879	44	2.33
2	ADV1+2	3.36	61 998	230	3.71	3.70	94 458	320	3.39
3	ADV3	3.36	207 999	1 302	6.26	4.20	148 556	1 124	7.57
4									
5	DV1	0.60	4 515	9	1.99	0.62	-	5	-
6	Petroleum Refining	0.15	25 004	4	0.16	0.16	45 629	7	0.15
7	Oil Refining	0.59	-	-	-	0.60	-	-	-
8	White Oil	5.50	68	-	-	5.50	86	-	-
9	Greases	7.80	512	4	7.80	7.80	451	7	15.50
10	Mixture-finishing Products Delivery (MFPD) Old Refinery	0.88	-	82	-	0.88	326	8	25.50
11	Furfural Solventation 1+2	4.70	9 868	47	4.76	4.70	9 779	47	4.81
12	Dewaxing 1+2	83.00	6 189	1 104	178.38	90.00	7 258	950	130.10
13	Deoiling	154.00	658	110	167.17	166.00	1 996	243	121.70
14	Wax	21.50	134	16	119.40	21.50	199	21	105.50
15	Oil Hydrofining	15.60	2 376	41	17.26	15.60	3 144	45	14.30
16	Contact	9.06	-	-	-	9.06	-	4	-
17	Acid Refining	1.12	-	-	-	1.12	-	-	-
18	H_2 Plant	1 250.00	110	138	1 254.50	1 250.00	99	132	1 333.30
19	MFPD	0.88	61 999	55	0.89	0.88	94 458	83	0.88
20	Additives	-	359	63	175.48	175.00	347	122	351.60
21	Catalytic Reforming	8.23	20 590	186	9.03	9.00	10 842	148	13.30
22	Petroleum Gas Oil Hydrofin.	16.10	24 081	470	19.52	17.30	9 651	167	17.30
23	Gasoline Hydrogenation	28.00	22 720	660	29.04	29.00	14 114	409	28.80
24	Gases Fractionation	14.40	6 061	91	15.01	15.00	4 144	62	15.00
25	Normal Paraffin Separation	370.00	-	-	-	350.00	-	1	-
26	MFPD-DRT	0.88	207 999	180	0.86	0.85	142 556	126	0.84
27	Catalytic Cracking	54.20	61 528	3 426	55.66	54.40	60 438	3 288	54.40
28	Alkyiation	36.50	-	-	-	36.50	-	1	-
29	Asphalt	4.10	782	4	5.11	4.85	5 894	29	4.92
30	Coking	25.58	1 854	112	60.41	26.00	-	58	-
31	Gases Desulfurization Sulfur Recovery	10.50	5 156	52	10.08	10.10	5 276	53	10.00

Table AP-D.1.e - PROCESS POWER CONSUMPTION - continued

#	Plant	Schedules Specific Consumption (kWh/t)	February 1990			March 1991		
			Throughput (Processing) Tonnes	Achieved Electric Power Consumption (mWh)	Achieved Specific Consumption (kWh/t)	Throughput (Processing) Tonnes	Achieved Electric Power Consumption (mWh)	Achieved Specific Consumption (kWh/t)
1	AD1	2.30	15 747	84	5.33	25 506	129	5.06
2	ADV1+2	3.70	26 375	201	7.62	80 310	297	3.70
3	ADV3	4.20	130 714	867	6.63	158 225	867	5.48
4								
5	DV1	0.62	-	-	-	440	7	15.90
6	Petroleum Refining	0.16	19 776	3	0.15	58 557	9	0.15
7	Oil Refining	0.60	-	-	-	-	-	-
8	White Oil	5.50	168	1	5.95	216	1	4.63
9	Greases	7.80	216	6	27.70	495	4	8.08
10	Mixture-finishing Products Delivery (MFPD) Old Refinery	0.88	690	82	118.80	5 604	116	20.70
11	Furfural Solventation 1+2	4.70	389	2	5.14	13 872	65	4.71
12	Dewaxing 1+2	90.00	2 210	425	192.30	9 977	1 515	151.80
13	Deoiling	169.00	-	-		2 324	388	163.90
14	Wax	21.50	25	34	1 360.00	465	23	49.50
15	Oil Hydrofining	15.60	-	-	-	5 647	88	15.58
16	Contact	9.06	-	-	-	-	5	-
17	Acid Refining	1.12	-	-	-	-	-	-
18	H_2 Plant	1 250.00	78	97	1 243.50	106	132	1 245.20
19	MFPD	0.89	26 375	23	0.87	80 310	78	0.97
20	Additives	175.00	293	51	174.00	554	97	175.10
21	Catalytic Reforming	9.00	-	-	-	-	-	-
22	Petroleum Gas Oil Hydrofin.	17.30	-	-	-	-	-	-
23	Gasoline Hydrogenation	29.00	-	-	-	-	-	-
24	Gases Fractionation	15.00	2 829	42	14.80	4 007	60	14.97
25	Normal Paraffin Separation	350.00	-	-	-	-	2	-
26	MFPD-DRT	0.85	130 714	111	0.85	158 225	134	0.85
27	Catalytic Cracking	54.40	32 147	1 749	54.40	26 988	1 471	54.50
28	Alkylation	36.50	-	-	-	-	-	-
29	Asphalt	4.85	361	2	5.54	465	1	4.30
30	Coking	26.00	-	-	-	3 347	87	26.00
31	Gases Desulfurization Sulfur Recovery	10.10	1 648	17	10.30	1 440	15	10.41

Table AP-D.1.f - PROCESS POWER CONSUMPTION - continued

	Plant	Schedules Specific Consumption (kWh/t)	December 1990			January 1991		
			Throughput (Processing) Tonnes	Achieved Electric Power Consumption (mWh)	Achieved Specific Consumption (kWh/t)	Throughput (Processing) Tonnes	Achieved Electric Power Consumption (mWh)	Achieved Specific Consumption (kWh/t)
1	AD1	2.30	25 573	83	3.24	21 476	85	3.95
2	ADV1+2	3.70	81 666	300	3.67	98 727	362	3.67
3	ADV3	4.20	118 118	700	5.93	88 235	561	6.36
4								
5	DV1	0.62	5 439	5	0.92	2 397	9	3.75
6	Petroleum Refining	0.16	44 084	7	0.16	52 319	8	0.15
7	Oil Refining	0.60	-	-	-	-	-	-
8	White Oil	5.50	206	1	4.85	135	1	7.41
9	Greases	7.80	491	4	8.15	574	5	8.71
10	Mixture-finishing Products Delivery (MFPD) Old Refinery	0.88	7 610	44	5.78	-	294	-
11	Furfural Solventation 1+2	4.70	12 361	86	4.68	22 141	104	4.70
12	Dewaxing 1+2	90.00	11 576	1 500	129.60	18 094	1 628	89.90
13	Deoiling	166.00	2 538	430	169.40	3 148	523	166.10
14	Wax	21.50	926	20	21.60	886	19	21.40
15	Oil Hydrofining	15.60	5 724	90	15.70	9 238	144	15.60
16	Contact	9.00	-	5	-	-	5	-
17	Acid Refining	1.12	-	-	-	-	-	-
18	H_2 Plant	1 250.00	141	177	1 255.30	124	155	1 250.00
19	MFPD	0.88	81 666	72	0.88	98 727	87	0.88
20	Additives	175.00	669	117	174.90	725	127	175.10
21	Catalytic Reforming	9.00	-	35	-	-	13	-
22	Petroleum Gas Oil Hydrofin.	17.30	-	-	-	-	-	-
23	Gasoline Hydrogenation	29.00	-	-	-	-	-	-
24	Gases Fractionation	15.00	1 646	25	15.20	1 959	29	14.80
25	Normal Paraffin Separation	350.00	-	1	-	-	-	-
26	MFPD-DRT	0.85	118 118	110	0.93	88 235	75	0.85
27	Catalytic Cracking	54.40	73 512	4 500	61.20	41 100	2 897	70.50
28	Alkylation	36.50	4 164	158	37.90	2 855	104	36.40
29	Asphalt	4.85	389	2	5.14	1 325	7	5.28
30	Coking	26.00	16 442	430	26.10	23 483	611	26.00
31	Gases Desulfurization Sulfur Recovery	10.10	9 213	93	10.09	4 756	48	10.10

TABLE AP-D.2 - TOTAL ELECTRIC POWER CONSUMPTION

#	Description	1990 (Monthly)							1991 (Monthly)				
		June	July	Aug	Sept	Oct	Nov	Dec	Jan	Feb	March	April	May
1	Electric power produced in own generators (MWh)	15 273	11 988	9 727	6 809	8 015	10 942	10 908	15 743	11 336	17 793	17 085	18 449
2	Electric power bought from National System (MWh)	9 181	18 676	23 733	20 810	16 801	15 510	14 561	14 036	8 393	6 520	10 360	7 071
3	Electric power sold to National System (MWh)	701	-	-	-	195	149	89	128	72	183	15	65
4	Electric power sold to other consumers (MWh)	113	105	108	102	107	103	96	90	133	136	149	93
5	Steam sold to other consumers	14 361	16 192	14 765	16 620	22 243	35 214	32 451	34 727	19 426	24 089	18 347	11 976

TABLE AP-D.3.a - SUBSTATION LIST
Sh. #1 of 3

Item No.	Unit Substation No.	Process Unit	TRANSFORMER		
			Quantity/kVA	Primary kV	Secondary kV
1.	1A	Atmospheric + vacuum Distillation 3 + Gases fractionation	3 x 1600	6	0.4
2.	1B	Coking	3 x 1600	6	0.4
3.	1C	Gases recovery + Gasoline hydrogenation Petrotel & Gas Oil Hydrofinishing	3 x 1600	6	0.4
4.	1D	Catalytic cracking. Alkylation. Air compressors. Condensate station.	5 x 1600	6	0.4
5.	1B	Pump house. Visbreaker. Ethylation.	2 x 1000	6	0.4
6.	1F	Hydrogen plant 2	2 x 630	6	0.4
7.	2A	Electric shop. Mechanic shop.	2 x 1000	6	0.4
8.	2B	Automatic ramp. Pump house.	2 x 1000	6	0.4
9.	2C	Flare compressors. Liquified gases store. Flare.	2 x 1600	6	0.4
10.	2D	Pump house. Refinery recycle towers.	2 x 630	6	0.4
11.	2E	Recycle pumps house. Pyrolysis tower.	2 x 630	6	0.4
12.	2F	Gases desulfurization + sulphur recovery	2 x 1600	6	0.4

TABLE AP-D.3.b - SUBSTATION LIST
Sh. #2 of 3

Item No.	Unit Substation No.	Process Unit	TRANSFORMER		
			Quantity kVA	Primary kV	Secondary kV
13.	2G	Cleaning.	3 x 1000	6	0.4
14.	2H	Fire pumps house.	2 x 1600	6	0.4
15.	2I	Pumps house.	2 x 1000	6	0.4
16.	2J	Pumps house. Black products pump house.	2 x 1000	6	0.4
17.	PT1	Dewaxing 1.	2 x 1000	6	0.4
18.	PT2	Dewaxing 2.	2 x 1000	6	0.4
19.	PT3	Deoiling.	2 x 1000	6	0.4
20.	PT4	Atmospheric + vacuum distillation. Desalting 1 + 2	2 x 560	6	0.4
21.	PT5	Contact. Hydrogen Hydrofinishing.	2 x 1000	6	0.4
22.	PT6	Furfural.	2 x 560	6	0.4
23.	PT7	Wax, Industrial air compressors. Percolation. Mix-finishing-products delivery deposit, oil block.	2 x 1000	6	0.4
24.	PT8	Oil block compressor. Laboratory.	2 x 750	6	0.4
25.	PT9	Asphalt plant. Industrial air compressors.	6 x 560	6	0.4
26.	PT10	Oil block recycle water tower.	2 x 1000	6	0.4
27.	PT11	Intervention block. Depot. Black products pump house.	2 x 1000	6	0.4

TABLE AP-D.3.c - SUBSTATION LIST
Sh. #3 of 3

Item No.	Unit Substation No.	Process Unit	TRANSFORMER		
			Quantity/kVA	Primary kV	Secondary kV
28.	PT12	Recycle water tower. AD1. VD2.	2 x 800	6	0.4
29.	PT13	White oil. Lubricating greases. Industrial air compressors, petrol refining, VD1, laboratory.	2 x 800	6	0.4
30.	PT14	AVD2, VAD2 recycle water tower.	2 x 1000	6	0.4
31.	PT15	Additives plant.	2 x 1000	6	0.4
32.	AZOT	Nitrogen	1 x 1000	6	0.4
33.	CET	Heating power station 1 + 2	3 x 1000 3 x 630 3 x 1000	6	0.4

APPENDIX E REFINERY ENERGY BALANCE AND "ENERGY DEMAND" CRITERIA

To properly undertake an appraisal of the energy efficiency of Eastern European refinery operations, it was apparent that some standard measure of the performance of typical modern US refinery installations was essential. A literature search revealed two documents describing typical energy consumptions in the US refining industry based upon surveys and energy audits as follows:

R.V. Elshout, Barnard and Bunk Engineers and Constructors Inc., Pasadena, California, Hydrocarbon Processing, July 1982, Pg. 109.

R.O. Pelham and R.D. Moriarty, Profimatics, Inc., Thousand Oaks, California, Hydrocarbon Processing, July 1985, Pg. 51.

The 1982 article lists typical utility requirements for a range of common refinery processing units, whereas the 1985 article analyzes the thermodynamic elements of energy usage for a typical 80 000 BPSD fuels refinery. These two references assessed US refinery energy performance from 1972 through the early 1980s. This is the period during which the US refining industry had recorded energy utilization improvements of about 25 percent.

By convention, the volumetic based English system of measurements (Barrels, API, BTU's, etc.) is still preferred by US refineries whereas mass and the metric or System International units (grams, metric tons, specific gravity, joules, kilocalories, etc.) are commonly used in Europe. Therefore, it is necessary to establish equivalent values between the two methods of measurement so that equitable comparisons can be made. The typical US refinery unit energy demands provided by Elshout have therefore been transformed from American to European practice as shown in the following Tables 1-3 by the provision of typical API gravities (where appropriate) for the unit feedstocks.

Direct and positive comparison of total energy demands between similar unit operations is still not possible; however, due to the individual refiner's selection of electric or motive steam for the provision of mechanical power land also to the selection of cooling water or air as the sink for rejected heat. Consequently, suitable conversions to the basic fuel oil energy source were required and are shown in Table 4 in both the European and American usages. DMC believes that its selected efficiency factors of 80 percent for steam generation; 35 percent for power generation; and 60 percent for combined pump with motor driver are reasonable or conservative in deriving the selected conversion to fuel oil equivalence to obtain a common, simple, and effective measure of total energy demand.

In a further attempt to extend and update the validity of these data, the most recent publication of refinery unit licensors' information (Refiner's Notebook - "Hydrocarbon Processing," November 1990) was selected to reflect technical and economic trends, together with other available information, to supplement lube oil energy demands. A consolidated listing of the results is shown in Tables AP-E.1 through AP-E.13.

Finally, Table AP-E.14 attempts a reconciliation of the "Unit Total Energy Requirements" chosen from the above-cited development and based upon Elshout, with the overall typical fuels refinery energy usage reported in the Profimatics survey. The predicted results of 378 455 BTU per barrel versus 380 000 BTU per barrel required by the "reasonably efficient fuels refinery" cited in the Profimatics example provides reasonable assurance for the general validity of the methodology even though it is claimed that improvements are continuing at the rate of 1 to 2 percent per year.

For convenience, Table AP-E.15 summarizes the "Refinery Unit Energy Demand Criteria" selected as best representing expected and obtainable refinery practice under current technical knowledge and economic pressures. These values were used for the overall assessment of the Eastern European energy efficiency of refinery operations.

In conclusion, it is well to recognize that in these selected energy demands, the potential for a further 15 to 20 percent reduction in energy usage could be technically/economically feasible by prudent retrofitting in existing plant but more likely in applying modern design techniques to future energy efficient installations where proper long term economic criteria are both encouraged and applied.

TABLE AP-E.1 - TYPICAL REFINERY UTILITY USAGE

PER 1000 BPSD CAPACITY EXCEPT AS NOTED

	TYPICAL °API	FUEL FIRED M BTU/H	18 °F ΔT CW GPM	POWER KWH/H	STEAM LB/H	EXCH SURFACE FT2
CRUDE	25.0	2 500	375	10	333	1 200
	40.0	3 330	500	13	250	1 000
VAC DISTILLATION	16.0	2 100	410	15	1 250	2 000
VISBREAKER	9.0	8 000	240	15	1 250	
THERMAL CRACKER	9.0	20 000	2 000	31	1 900	
DELAYED COKER	9.0	9 120	830	50	1 450	
FLUID COKER (1)	9.0	-250	830	175	-3 300	
PROPANE DEASPHALTING	9.0	15 200	1 000	40	2 100	
HYDROTREATING NAPHTHA (2)	45.0	2 750	150	50	700	900
GAS OIL	25.0	3 500	250	60	700	
CAT REFORMING (90 RON)	45.0	16 000	550	150	1 800	
CAT CRACKING FCC (3 & 4)	20.0	800	800	275	650	
TCC	20.0	2 000	800	225	-650	
HYDROCRACKING (5)	20.0	8 000	750	200	600	2 100
CAT POLYMERIZATION	110.0		350	2 160	8 000	
SULFUR PLANT (10 TPD S)		1 500		45	-2 800	
MEA UNIT (10 TPD S)			220	12.5	4 200	
H_2 PLANT (10 MM SCFD) (6 & 7)		200	200	1 400	1 800	

(1) INCLUDES AIR BLOWER FOR AVERAGE 15% PRODUCTION COKE BURNING
(2) COMPRESSOR POWER COULD BE SUPPLIED FROM ASSOCIATED CAT REFORMER
(3) POWER INCLUDES REGENERATOR BLOWER BUT NO CREDIT FOR LETDOWN TUR
(4) NO CREDIT FOR CO BOILER WASTE HEAT RECOVERY
(5) POWER EXCLUSIVE OF H2 MAKE-UP COMPRESSOR
(6) FUEL INCLUDES FEED - STEAM METHANE REFORMING
(7) POWER INCLUDES BOOSTER COMPRESSOR TO 1750 PSIG
(8) REF: HYDROCARBON PROCESSING JULY, 1982, PG 109

TABLE AP-E.2 - TYPICAL REFINERY UTILITY USAGE [1]

PER 1.0 BBL CAPACITY EXCEPT AS NOTED

	TYPICAL °API	FUEL FIRED M BTU/H	18 °F ΔT CW GPM	POWER KWH/H	STEAM LB/H	EXCH SURFACE FT2
CRUDE	25.0	60 000	540	0.24	7.992	28.8
	40.0	79 920	720	0.312	6	24.0
VAC DISTILLATION	16.0	50 400	590.4	0.36	30	48.0
VISBREAKER	9.0	192 000	345.6	0.36	30	
THERMAL CRACKER	9.0	480 000	2 880	0.744	45.6	
DELAYED COKER	9.0	218 880	1 195.2	1.2	34.8	
FLUID COKER [2]	9.0	-6 000	1 195.2	4.2	-79.2	
PROPANE DEASPHALTING	9.0	304 800	1 440	0.96	50.4	
HYDROTREATING NAPHTHA [3]	45.0	66 000	216	1.2	16.8	21.6
GAS OIL	25.0	84 000	360	1.44	16.8	
CAT REFORMING (90 RON)	45.0	384 000	792	3.6	43.2	
CAT CRACKING FCC (4 & 5)	20.0	248 846	1 152	6.6	15.6	
TCC	20.0	277 646	1 152	5.4	-15.6	
HYDROCRACKING [6]	20.0	192 000	1 080	4.8	14.4	50.4
CAT POLYMERIZATION	110.0	0	504	3.8	192.0	
SULFUR PLANT (1.0 TONNE S)		3 600 000		108.0	-6 720	
MEA UNIT (1.0 TONNE S)			31 680	30.0	10 080.0	
H_2 PLANT (1000 SCF) (7 & 8)		480	28.8	3.4	4.3	

(1) REF: HYDROCARBON PROCESSING JULY, 1982, PG 109
(2) INCLUDES AIR BLOWER FOR AVERAGE 15% PRODUCTION COKE BURNING
(3) COMPRESSOR POWER COULD BE SUPPLIED FROM ASSOCIATED CAT REFORMER
(4) NOTE: POWER INCLUDES REGENERATOR BLOWER BUT NO CREDIT FOR LETDO
(5) NOTE: 5 W% COKE BURNING INCLUDED BUT NO CREDIT FOR CO BOILER WA
(6) POWER EXCLUSIVE OF H2 MAKE-UP COMPRESSOR
(7) FUEL INCLUDES FEED - STEAM METHANE REFORMING
(8) POWER INCLUDES BOOSTER COMPRESSOR TO 120 BARG

TABLE AP-E.3 - TYPICAL REFINERY UTILITY USAGE [1]

PER 1.0 TONNE CAPACITY EXCEPT AS NOTED

	TYPICAL SP GR	FUEL FIRED KCAL	10 °C ΔT CW M3	POWER KWH/H	EXCHANGE STEAM KG	SURFACE m2
CRUDE DISTILLATION	0.9042	105 264	14.2	1.67	25.3	18.6
	0.8251	153 650	20.8	2.38	20.8	17.0
VAC DISTILLATION	0.9593	83 337	14.6	2.36	89.4	29.3
VISBREAKER	1.0071	302 407	8.2	2.25	85.1	
THERMAL CRACKER	1.0071	756 017	27.2	33.77	-44.3	
DELAYED COKER	1.0071	344 744	28.3	7.50	98.7	
FLUID COKER [2]	1.0071	-9 450	28.3	26.26	-224.7	
PROPANE DEASPHALTING	1.0760	537 768	31.9	5.62	133.8	
HYDROTREATING NAPHTHA [3]	0.8017	130 588	6.4	9.43	59.9	15.8
GAS OIL	0.9042	147 369	9.5	10.03	53.1	
CAT REFORMING (90 RON)	0.8017	759 784	23.5	28.28	154.0	
CAT CRACKING FCC (4 & 5)	0.9340	422 627	29.4	44.50	47.7	
TCC	0.9340	471 539	29.4	36.41	-47.7	
HYDROCRACKING [6]	0.9340	326 083	27.5	32.27	44.1	31.6
CAT POLYMERIZATION	0.5859		20.5	41.27	936.3	
SULFUR PLANT (1.0 TONNE S)		999 295		119.02	-3 360.0	
MEA UNIT (1.0 TONNE S)			132.0	33.06	5 040.0	
H_2 PLANT (1000 SCF) (7 & 8)		4 038	3.6	112.22	65.5	

(1) REF: HYDROCARBON PROCESSING JULY, 1982, PG 109
(2) INCLUDES AIR BLOWER FOR AVERAGE 15% PRODUCTION COKE BURNING
(3) COMPRESSOR POWER COULD BE SUPPLIED FROM ASSOCIATED CAT REFORMER
(4) NOTE: POWER INCLUDES REGENERATOR BLOWER BUT NO CREDIT FOR LETDO
(5) NOTE: 5 W% COKE BURNING INCLUDED BUT NO CREDIT FOR CO BOILER WA
(6) POWER EXCLUSIVE OF H2 MAKE-UP COMPRESSOR
(7) FUEL INCLUDES FEED - STEAM METHANE REFORMING
(8) POWER INCLUDES BOOSTER COMPRESSOR TO 120 BARG

TABLE AP-E.4 - TYPICAL REFINERY UTILITY USAGE [1]

PER 1.0 TONNE CAPACITY EXCEPT AS NOTED

	TYPICAL SP GR	FUEL FIRED KCAL	10 °C ΔT CW KCAL	POWER KCAL	STEAM KCAL	TOTAL ENERGY KCAL/M.T	SAY USE TOTAL ENERGY MKCAL/M.T	SAY USE TOTAL ENERGY MBTU/Bbl
CRUDE DISTILLATION	0.9042	105 264	8 532	4 012	17 697			
	0.8251	153 650	12 467	5 715	14 545			
VAC DISTILLATION	0.9593	83 337	8 786	5 672	62 547			
VISBREAKER	1.0071	302 407	4 908	5 402	59 578			
THERMAL CRACKER	1.0071	756 071	16 341	81 037	-30 981			
DELAYED COKER	1.0071	344 744	16 951	18 008	69 111			
FLUID COKER [2]	1.0071	-9 450	16 951	63 029	-157 287			
PROPANE DEASPHALTING	1.0760	537 768	19 118	13 484	93 680			
HYDROTREATING NAPHTHA [3]	0.8017	130 588	3 849	22 623	4 191			
GAS OIL	0.9042	147 369	5 688	24 071	37 163			
CAT REFORMING (90 RON)	0.8017	759 784	14 113	67 868	107 775			
CAT CRACKING FCC (4 & 5)	0.9340	422 627	17 621	106 800	33 406			
TCC	0.9340	471 539	17 621	87 382	-33 406			
HYDROCRACKING [6]	0.9340	326 083	16 520	77 673	30 837			
CAT POLYMERIZATION	0.5859	0	12 289	99 052	655 404			
SULFUR PLANT (1.0 TONNE S)		999 295	0	285 638	-2 352 000	-1 067 067	-1 070	-1 070
MEA UNIT (1.0 TONNE S)		0	79 200	79 344	3 528 000			
H_2 PLANT (1000 SCF) (7 & 8)		4 038	2 182	269 231	45 825			

(1) REF: HYDROCARBON PROCESSING JULY, 1982, PG 109
(2) INCLUDES AIR BLOWER FOR AVERAGE 15% PRODUCTION COKE BURNING
(3) COMPRESSOR POWER COULD BE SUPPLIED FROM ASSOCIATED CAT REFORMER
(4) NOTE: POWER INCLUDES REGENERATOR BLOWER BUT NO CREDIT FOR LETDO
(5) NOTE: 5 W% COKE BURNING INCLUDED BUT NO CREDIT FOR CO BOILER WA
(6) POWER EXCLUSIVE OF H2 MAKE-UP COMPRESSOR
(7) FUEL INCLUDES FEED - STEAM METHANE REFORMING
(8) POWER INCLUDES BOOSTER COMPRESSOR TO 120 BARG

ENERGY CONVERSION FACTORS TO FUEL OIL EQUIVALENTS::
CW, M3/H: USE 4.41*75/2284*0.6 = 0.24 KWH/H * 2400 = 579 KCAL - SA
STEAM, KG/H: USE 540 KCAL/KG @ 80% EFF = 675 KCAL/KG - SA
POWER, KWH: USE 860.5 KCAL/KWH @ 35 % EFF = 2459 KCAL - SA

TABLE AP-E.5 - TYPICAL REFINERY UTILITY USAGE

****

PER 1.0 BBL CAPACITY EXCEPT AS NOTED

UNIT	REF HDBK 1990*	TYPICAL °API	FUEL FIRED BTU	18 °F ΔT CW US GAL	POWER KWH	STEAM LB
CRUDE DISTILLATION	TECHNIP LO 4TWR	34.0	40 000	68	1.10	6.0
	* TECHNIP HI 4TWR	34.0	60 000	90	1.60	12.0
	H PROC JULY '82 Hy	25.0	60 000	540	0.24	8.0
	H PROC JULY '82 Lt	40.0	79 920	720	0.31	6.0
	GDANSK	32.0	20	0.60	24.0	
CRUDE/VAC DISTILLATION	FW LO RANGE	8.7	80 000	20	0.60	24.0
	* FW HI RANGE	8.7	120 000			
	PLOCK LO RANGE 1&2	32.5				
	PLOCK HI RANGE 3&4	32.5				
VAC DISTILLATION	* SHELL - LUBES	22.0	590	0.36	30.0	
	H PROC JULY '82	16.0	50 400			
	GDANSK	20.0				
VAC FLASHER						
LT ENDS FRACT'N (USE)						
LPG		130.0	260	0.30	40.0	
NAPHTHA SPLITTING		50.0	450	0.30	70.0	
H'TREATING - NAPHTHAS	H PROC JULY '82	45.0	66 000	216	1.20	16.8
	GDANSK	45.0				
H'TREATING - GAS OILS	H PROC JULY '82	25.0	84 000	360	1.44	16.8
	PLOCK	26.0				
	GDANSK	26.0				
H'TREATING - RESID	* IFP - RESID	15.0	52 500	285	8.50	74.0
	* CHEVRON					
REFORMING	* CHEVRON + HT	48.0	285 000	160	0.70	-40.0
	* ENGELHARD-100 RON	48.0	250 000	40	2.00	-12.5
	* IFP-100 RON	43.0	65 000		1.00	43.2
	H PROC JULY '82	45.0	384 000	792	3.60	
	PLOCK + HT (AVG)	48.0				
	GDANSK	45.0				

TABLE AP-E.6 - TYPICAL REFINERY UTILITY USAGE

****

PER 1.0 BBL CAPACITY EXCEPT AS NOTED

UNIT	REF HDBK 1990*	TYPICAL °API	FUEL FIRED BTU	18 °F ΔT CW US GAL	POWER KWH	STEAM LB
FCCU	MW KELLOGG	20.0	229 646	0	0.90	-100.0
	H PROC JULY '82	20.0	248 846	1 152	6.60	15.6
	PLOCK I	20.0				
	PLOCK II	20.0				
TCCU	H PROC JULY '82	20.0	277 646	1 152	5.40	-15.6
ALKYLATION - PRODUCT	STRATCO H_2SO_4	50.0		2 050	13.50	180.0
	PLOCK	50.0				
OLIGOMERIZATION - PRODUCT	MOBIL/BADGER	50.0		150	10.00	
	IFP	50.0		1 315	1.90	54.0
CAT POLYMERIZATION	H PROC JULY'82	110.0		504	3.84	192.0
PROPANE DEASPHALTING	IFP	12.0	23 750		1.40	7.0
	KERR-McGEE	12.0	95 000	0	2.00	12.0
	* FW LUBE	12.0	89 000	0	2.00	60.0
	H PROC JULY '82	9.0	364 800	1 440	0.96	50.4
LUBES - PDA	FW LUBE	12.0	86 000	415	2.10	115.0
	SHELL	12.0				
	GDANSK	15.0				
- FURFURAL/NMP	SHELL	25.0				
	* EXXON NMP - 103 VI	25.0	202 000	200	1.40	54.3
	PLOCK	25.0				
	GDANSK	25.0				
- DEWAXING	SHELL MEK	27.0				
	PLOCK ACETONE/BENZ	27.0				
	GDANSK DI-ME	27.0				
- H'FINISHING	SHELL	27.0				
	PLOCK	27.0				
	GDANSK	27.0				
GREASE - PER TONNE	STRATCO					

TABLE AP-E.7 - TYPICAL REFINERY UTILITY USAGE

****

PER 1.0 BBL CAPACITY EXCEPT AS NOTED

UNIT	REF HDBK 1990*	TYPICAL °API	FUEL FIRED BTU	18 °F ΔT CW US GAL	POWER KWH	STEAM LB
H'CRACKING	* LUMMUS/OXY/AMOCO	12.4 - 783 SCF H_2	56 100	64	8.40	-35.5
		4.7 - 1 720 SCF H_2	69 800	164	16.50	-97.0
	* CHEVRON	23.0	143 000	330	7.00	-50.0
	* IFP	21.5	40 000		2.80	12.5
	* LINDE	21.5	50 000	190	1.50	
	* UNOCAL/UOP	8.4	135 000		10.00	
	H PROC JULY '82	20.0	192 000	1 080	4.80	14.4
THERMAL CRACKER	H PROC JULY '82	20.0	48 000	1 152	5.40	-15.6
VISBREAKING	* LUMMUS - 356'FFEED	8.2	75 000	270	0.50	45.0
	* IFP	15.0	22 800	0	1.90	10.6
	H PROC JULY '82	9.0	192 000	346	0.36	30.0
COKING	* LUMMUS - DELAYED	7.4	145 000	180	3.90	20.0
	* EXXON - FLEXI	3.1		400	13.00	-100.0
	* FW	2.6	120 000	36	3.60	-40.0
	H PROC JULY '82 DE	9.0	218 880	1 195	1.20	34.8
	H PROC JULY '82 FL	9.0	-6 000	1 195	4.20	-79.2
COKE CALCINING-PER TONNE	* GKT - W GERMANY					
ASPHALT BLOWING	* SNAM - 80/100 PEN	5.9	89 335		0.81	6.57
	40/50 PEN	5.1	57 659		2.73	30.75
	PLOCK	8.0				
	GDANSK	8.0				
MTBE - PRODUCT	* CD TECH	45.4		1 860	1.00	296.0
	* PHILLIPS	45.4		1 870	1.10	224.0
MEA UNIT (1.0 TONNE S)	* H PROC JULY '82			31 680	30.00	10 080.0
	GDANSK					
SULFUR PLANT (1.0 TONNE S)	* H PROC JULY '82		3 600 000		108.00	-6 720.0
	PLOCK					
	GDANSK					
H_2 PLANT (1000 SCF) (6 & 7)			480	29	3.36	4.3

TABLE AP-E.8 - TYPICAL REFINERY UTILITY USAGE

****

PER 1.0 TONNE CAPACITY EXCEPT AS NOTED

UNIT	REF HDBK 1990*	TYPICAL SP GR	FUEL FIRED KCAL	10 °C ΔT CW M3	POWER KWH	STEAM LB
CRUDE DISTILLATION	TECHNIP LO 4TWR	0.8550	74 212	1.9	8.10	20.1
	TECHNIP HI 4TWR	0.8550	111 317	2.5	11.05	40.1
	H PROC JULY '82 Hy	0.8042	105 264	14.2	1.67	25.3
	H PROC JULY '82 Lt	0.8251	153 650	20.8	2.38	20.8
	GDANSK	0.8654	153 000	0.4	5.00	40.2
CRUDE/VAC DISTILLATION	FW LO RANGE	1.0093	125 734	0.5	3.74	67.9
	* FW HI RANGE	1.0093	188 601	0.5	3.74	67.9
	PLOCK LO RANGE 1 & 2	0.8628	180 380	8	4.80	56.0
	PLOCK HI RANGE 3 & 4	0.8628	205 580	8	8.20	139.0
VAC DISTILLATION	* SHELL - LUBES	0.9218	174 000	14.2	3.40	131.0
	H PROC JULY '82	0.9593	83 337	14.6	2.36	89.4
	GDANSK	0.9340	122 000	9.7	6.90	138.0
VAC FLASHER		0.0000	0			
LT ENDS FRACT'N (USE)						
LPG		0.5411	0	11.4	3.49	211.2
NAPHTHA SPLITTING		0.7796	0	13.7	2.42	255.5
HYDROTREATING - NAPHTHAS	H PROC JULY '82	0.8017	130 588	6.4	9.43	59.9
	GDANSK	0.8017	178 000	1.3	12.60	4.8
- GAS OILS	H PROC JULY '82	0.9042	147 369	9.5	10.03	53.1
	PLOCK	0.8984	61 000	14.0	14.00	55.6
	GDANSK	0.8984	131 000	1.4	2.40	3.1
- RESID	* IFP - RESID	0.9659	86 221	7.0	55.42	218.9
	* CHEVRON	0.0000	0	0.0	0.00	0.0
REFORMING	* CHEVRON + HT	0.7883	572 487	4.8	5.59	-145.0
	* ENGELHARD-100 RON	0.7883	503 058	1.2	15.98	0.0
	* IFP - 102 RON	0.7883	130 795	0.0	7.99	-45.3
	H PROC JULY '82	0.8017	759 784	23.5	28.28	154.0
	PLOSK + HT (AVG)	0.7383	760 000	15.0	42.00	138.8
	GDANSK	0.8071	657 000	5.7	7.80	521.2

TABLE AP-E.9 - TYPICAL REFINERY UTILITY USAGE

****

PER 1.0 TONNE CAPACITY EXCEPT AS NOTED

UNIT	REF HDBK 1990*	TYPICAL SP GR	FUEL FIRED KCAL	10 °C ΔT CW M3	POWER KWH	STEAM LB
FCCU	MW KELLOGG	0.9340	390 019	0.0	6.07	-305.9
	H PROC JULY '82	0.9340	422 627	29.4	44.60	47.7
	PLOCK I	0.9340	601 930	32.0	62.00	55.6
	PLOCK II	0.9340	808 770	17.0	28.00	47.1
TCCU	H PROC JULY '82	0.9340	471 539	29.4	36.41	-47.7
ALKYLATION - PRODUCT	STRATCO H_2SO_4	0.7796	0	62.6	109.05	659.7
	PLOCK	0.7795	385 680	116.0	41.00	130.0
OLIGOMERIZATION - PRODUCT	MOBIL/BADGER	0.7795	0	4.6	80.78	0.0
	IFP	0.7796	0	40.2	15.35	197.9
CAT POLYMERIZATION	H PROC JULY'82	0.5859	0	20.5	41.27	936.3
PROPANE DEASPHALTING	IFP	0.9861	38 206	0.0	8.94	20.3
	KERR-McGEE	0.9861	152 823	0.0	12.77	34.8
	* FW LUBE	0.9861	143 171	0.0	12.77	173.9
	H PROC JULY '82	1.0071	574 573	34.0	6.00	143.0
LUBES - PDA	FW LUBE	0.9861	138 345	10.0	13.41	333.2
	SHELL	0.9861	550 000	26.3	10.90	268.0
	GDANSK	0.9659	298 600	9.5	31.60	147.0
- FURFURAL/NMP	SHELL	0.9042	414 000	27.9	9.90	137.0
	* EXXON NMP - 103 VI	0.9042	354 389	5.3	9.75	171.6
	PLOCK	0.9042	453 860	30.0	20.00	333.3
	GDANSK	0.9042	281 500	8.0	3.13	134.8
- DEWAXING	SHELL MEK	0.8927	440	36.1	27.40	1 233.0
	PLOCK ACETONE/BENZ	0.8927	0	49.0	110.00	1 463.0
	GDANSK DI-ME	0.8927	0	19.4	35.13	1 593.7
- H'FINISHING	SHELL	0.8927	150 000	4.1	9.20	106.0
	PLOCK	0.8927	152 400	25.0	8.50	148.1
	GDANSK	0.8927	150 000	11.1	3.95	141.0
GREASE - PER TONNE	STRATCO	0.0000	545 000	660.0	81.50	0.0

TABLE AP-E.10 - TYPICAL REFINERY UTILITY USAGE

****

PER 1.0 TONNE CAPACITY EXCEPT AS NOTED

UNIT	REF HDBK 1990*	TYPICAL SP GR	FUEL FIRED KCAL	10 °C ΔT CWM3	POWER KWH	STEAM LB
H'CRACKING	* LUMMUS/OXY/AMOCO	0.9833	90 498	1.6	53.80	-103.2
		1.0389	106 573	3.8	100.02	-266.8
	* CHEVRON	0.9159	247 673	8.6	48.13	-156.0
	* IFP	0.9248	68 607	0.0	19.07	38.6
	* LINDE	0.9248	85 758	4.9	10.21	0.0
	* UNOCAL/UOP	1.0114	211 722	0.0	62.26	0.0
	H PROC JULY '82	0.9340	326 083	27.5	32.36	44.1
THERMAL CRACKER	H PROC JULY '82	0.9340	81 527	29.4	36.41	-47.7
VISBREAKING	* LUMMUS - 356'FFEED	1.0129	117 455	6.3	3.11	126.9
	* IFP	0.9659	37 444	0.0	12.39	31.4
	H PROC JULY '82	1.0071	302 407	8.2	2.25	85.1
COKING	* LUMMUS - DELAYED	1.0187	225 779	4.2	24.11	56.1
	* EXXON - FLEXI	1.0513	0	9.1	77.87	-271.8
	* FW	1.0552	180 395	0.8	21.49	-108.3
	H PROC JULY '82 DE	1.0071	344 744	28.3	7.50	98.7
	H PROC JULY '82 FL	1.0071	-9 450	28.3	26.26	-224.7
COKE CALCINING-PER TONNE	* GKT - W GERMANY	0.0000	270 000	0.0	54.00	1 950.0
ASPHALT BLOWING	* SNAM - 80/100 PEN	1.0300	55 000	0.0	4.00	20.0
	40/50 PEN	1.0360	65 000	0.0	10.00	20.0
	PLOCK	1.0143	139 700	0.0	5.00	18.5
	GDANSK	1.0143	90 165	0.0	16.95	86.6
MTBE - PRODUCT	* CD TECH	0.7999	0	55.4	7.87	1 057.3
	* PHILLIPS	0.7999	0	55.7	8.66	800.1
MEA UNIT (1.0 TONNE S)	* H PROC JULY '82	0.0000	0	132.0	33.06	5 040.0
	GDANSK	0.0000	0	0.0	0.00	6 292.0
SULFUR PLANT (1.0 TONNE S)	* H PROC JULY '82	0.0000	999 295	0.0	119.02	-3 360.0
	PLOCK	0.0000	1 397 000	0.0	68.00	-5 181.0
	GDANSK	0.0000	33	35.0	11.90	-1 075.0
H_2 PLANT (1000 NM3) (6 & 7)		0.0000	4 038	4.1	112.22	65.5

TABLE AP-E.11 - TYPICAL REFINERY UTILITY USAGE

****

PER 1.0 TONNE CAPACITY EXCEPT AS NOTED

UNIT	REF HDBK 1990*	TYPICAL SP GR	FUEL FIRED KCAL	10 °C ΔT CW KCAL	POWER KCAL	STEAM KCAL	TOTAL ENERGY KCAL/T	SAY USE TOTAL ENERGY M KCAL/T	SAY USE TOTAL ENERGY MBTU/Bbl
CRUDE DISTILLATION	TECHNIP LO 4TWR	0.8550	74 212	1 136	19 445	14 036	108 829	110	58.7
	TECHNIP HI 4TWR	0.8550	111 317	1 504	26 516	28 072	167 409	170	90.2
	H PROC JULY '82 Hy	0.9042	105 264	8 532	4 012	17 697	135 505	135	77.0
	H PROC JULY '82 Lt	0.8251	153 650	12 467	5 715	14 545	186 377	185	96.9
	GDANSK	0.8654	153 000	240	12 000	28 140	193 380	195	105.5
CRUDE/VAC DISTILLATION	FW LO RANGE	1.0093	125 734	283	8 985	47 561	182 563	185	116.2
	* FW HI RANGE	1.0093	188 601	283	8 985	47 561	245 430	245	156.2
	PLOCK LO RANGE 1 & 2	0.8628	180 380	4 800	11 520	39 200	235 900	235	128.3
	PLOCK HI RANGE 3 & 4	0.8628	205 580	4 500	19 680	97 300	327 060	325	177.9
VAC DISTILLATION	* SHELL - LUBES	0.9218	174 000	5 520	8 160	91 700	282 380	280	164.1
	H PROC JULY '82	0.9593	83 337	8 786	5 672	62 547	160 341	160	97.0
	GDANSK	0.9340	122 000	5 820	16 560	96 600	240 980	240	141.9
VAC FLASHER		0.0000	0	0	0	0	0		
LT ENDS FRACT'N (USE)		0.0000	0	0	0	0	0		
LPG		0.5411	0	6 864	8 379	147 850	163 094	165	55.6
NAPHTHA SPLITTING		0.7796	0	8 246	5 816	179 583	193 645	195	95.2
HYDROTREATING - NAPHTHAS	H PROC JULY '82	0.8017	130 588	3 849	22 623	41 913	198 972	200	100.6
	GDANSK	0.8017	178 000	780	30 240	3 360	212 380	210	107.3
- GAS OILS	H PROC JULY '82	0.9042	147 369	5 688	24 071	37 163	214 292	215	122.1
	PLOCK	0.8984	61 000	8 400	33 600	38 920	141 920	140	80.4
	GDANSK	0.8984	131 000	840	5 760	2 170	139 770	140	79.2
- RESID	* IFP - RESID	0.9659	86 221	4 215	133 006	153 236	376 678	375	229.4
	* CHEVRON	0.0000	0	0	0	0	0		
REFORMING	* CHEVRON + HT	0.7883	573 487	2 900	13 421	-101 488	488 319	490	242.7
	* ENGELHARD-100 RON	0.7883	503 058	725	38 345	0	542 128	540	269.4
	* IFP - 102 RON	0.7883	130 795	0	19 173	-31 715	118 253	120	58.8
	H PROC JULY '82	0.8017	759 784	14 113	67 868	107 775	949 540	950	479.9
	PLOSK + HT (AVG)	0.7883	760 000	9 000	100 800	97 160	966 960	965	480.6
	GDANSK	0.8071	657 000	3 420	18 720	364 840	1 043 980	1 045	527.7

TABLE AP-E.12 - TYPICAL REFINERY UTILITY USAGE

PER 1.0 TONNE CAPACITY EXCEPT AS NOTED

UNIT	REF HDBK 1990*	TYPICAL SP GR	FUEL FIRED KCAL	10 °C ΔT CW KCAL	POWER KCAL	STEAM KCAL	TOTAL ENERGY KCAL/T	SAY USE TOTAL ENERGY M KCAL/T	SAY USE TOTAL ENERGY MBTU/Bbl
FCCU	MW KELLOGG	0.9340	390 019	0	14 564	-214 143	190 404	190	112.1
	H PROC JULY '82	0.9340	422 627	17 621	106 800	33 406	580 454	580	341.8
	PLOCK I	0.9340	601 930	19 200	148 800	38 920	808 850	810	476.3
	PLOCK II	0.9340	808 770	10 200	67 200	51 870	938 040	940	552.3
TCCU	H PROC JULY '82	0.9340	471 539	17 621	87 382	-33 406	543 136	545	319.5
ALKYLATION - PRODUCT	STRATCO H_2SO_4	0.7796	0	37 566	261 713	461 785	761 064	760	374.1
	PLOCK	0.7796	385 680	69 600	98 400	91 000	644 680	645	316.9
OLIGOMERIZATION - PRODUCT	MOBIL/BADGER	0.7796	0	2 749	193 862	0	196 611	195	96.6
	IFP	0.7796	0	24 097	36 834	138 536	199 466	200	98.0
CAT POLYMERIZATION	H PROC JULY '82	0.5859	0	12 289	99 052	655 404	766 745	765	283.2
PROPANE DEASPHALTING	IFP	0.9861	38 206	0	21 458	14 198	73 863	75	45.9
	KERR-McGEE	0.9861	152 823	0	30 655	24 340	207 818	210	129.2
	* FW CRACKED	0.9861	143 171	0	30 655	121 701	295 527	295	183.7
	H PROC JULY '82	1.0071	574 573	20 427	14 407	100 092	709 498	710	450.5
LUBES - PDA	FW LUBE	0.9861	138 345	6 013	32 187	233 260	409 806	410	254.8
	SHELL	0.9861	550 000	15 780	26 160	187 600	779 540	780	484.6
	GDANSK	0.9659	298 600	5 700	75 840	102 900	483 040	485	294.1
-FURFURAL/NMP	SHELL	0.9042	414 000	16 740	23 760	95 900	550 400	550	313.7
	* EXXON NMP - 103 VI	0.9042	354 389	3 160	23 402	120 117	501 068	500	285.6
	PLOCK	0.9042	453 860	18 000	48 000	233 310	753 170	755	429.3
	GDANSK	0.9042	281 500	4 782	7 512	94 360	388 154	390	221.3
- DEWAXING	SHELL MEK	0.8927	440	21 660	65 760	863 100	950 960	950	535.2
	PLOCK ACETONE/BENZ	0.8927	0	29 400	264 000	1 024 100	1 317 500	1 320	741.5
	GDANSK DI-ME	0.8927	0	11 622	84 312	1 115 590	1 211 524	1 210	681.9
- HYDROFINISHING	SHELL	0.8927	150 000	2 460	22 080	74 200	248 740	250	140.0
	PLOCK	0.8927	152 400	15 000	20 400	103 670	291 470	290	164.0
	GDANSK	0.8927	150 000	6 654	9 480	98 700	264 834	260	149.1
GREASE - PER TONNE	STRATCO	0.0000	545 000	396 000	195 600	0	1 136 600	1 135	

TABLE AP-E.13 - TYPICAL REFINERY UTILITY USAGE

PER 1.0 TONNE CAPACITY EXCEPT AS NOTED

UNIT	REF HDBK 1990*	TYPICAL SP GR	FUEL FIRED KCAL	10 °C ΔT CW KCAL	POWER KCAL	STEAM KCAL	TOTAL ENERGY KCAL/T	SAY USE TOTAL ENERGY M KCAL/T	SAY USE TOTAL ENERGY MBTU/Bbl
HYDROCRACKING	* LUMMUS/OXY/AMOCO	0.9833	90 498	933	129 109	-72 207	148 332	150	92.0
		1.0389	106 573	2 255	240 036	-186 73[illegible]	162 123	160	106.2
	* CHEVRON	0.9159	247 673	5 148	115 516	-109 192	259 145	260	149.6
	* IFP	0.9248	68 607	0	45 758	27 033	141 397	140	82.4
	* LINDE	0.9248	85 758	2 935	24 513	0	113 206	115	66.0
	* UNOCAL/UOP	1.0114	211 722	0	149 428	0	361 150	360	230.3
	H PROC JULY '82	0.9340	326 083	16 520	77 673	30 837	451 112	450	285.6
THERMAL CRACKER	H PROC JULY '82	0.9340	81 521	17 621	87 382	-33 406	153 117	155	90.2
VISBREAKING	* LUMMUS - 356'FFEED	0.0129	117 455	3 808	7 461	98 859	217 583	220	138.9
	* IFP	0.9659	37 444	0	29 731	21 950	89 125	90	54.3
	H PROC JULY '82	1.0071	302 407	4 908	5 402	59 578	372 296	370	236.4
COKING	* LUMMUS - DELAYED	1.0187	225 779	2 524	57 861	39 267	325 431	325	209.0
	* EXXON - FLEXI	1.0513	0	5 436	186 898	-190 255	2 079	2	1.4
	* FW	1.0552	180 395	487	51 564	-75 819	156 627	155	104.2
	H PROC JULY '82 DE	1.0071	344 744	16 951	18 008	69 111	448 814	450	285.0
	H PROC JULY '82 FL	1.0071	-9 450	16 951	63 029	-157 287	-86 757	-85	-55.1
COKE CALCINING - PER TONNE	* GKT - W GERMANY	0.0000	270 000	0	129 600	1 365 000	1 764 600	1 765	
ASPHALT BLOWING	* SNAM - 80/100 PEN	1.0300	55 000	0	9 600	14 000	78 600	80	51.0
	40/50 PEN	1.0360	65 000	0	24 000	14 000	103 000	105	67.3
	PLOCK	1.0143	139 700	0	12 000	12 950	164 650	165	105.3
	GDANSK	1.0143	90 165	0	40 682	60 634	191 481	190	122.4
MTBE - PRODUCT	CD TECH	0.7999	0	33 220	18 895	740 134	792 249	790	399.5
	* PHILLIPS	0.7999	0	33 399	20 784	560 102	614 285	615	309.8
MEA UNIT (1.0 TONNE S)	H PROC JULY '82	0.0000	0	79 200	79 344	3 528 000	3 686 544	3 685	-
	GDANSK	0.0000	0	0	0	4 404 400	4 404 400	4 405	-
SULFUR PLANT (1.0 TONNE S)	H PROC JULY '82	0.0000	999 295	0	285 638	-2 352 000	-1 067 067	-1 070	-
	PLOCK	0.0000	1 397 000	0	163 200	-3 626 700	-2 066 500	-2 065	-
	GDANSK	0.0000	33	21 000	28 560	-752 500	-702 907	-705	-
H2 PLANT (1000 NM3) (6&7)		0.0000	4 038	2 438	269 331	45 825	321 633	320	-

TABLE AP-E.14 - TYPICAL REFINERY UTILITY USAGE

****

COMPARISON OF TYPICAL REFINERY UNIT TOTAL ENERGY REQUIREMENTS
AGAINST A REASONABLY EFFICIENT 80 000 EPSD USA FUELS REFINERY
(ENERGY REQUIREMENT = 380 000 BTU/BBL CRUDE FEED)

REF: PELHAM & MORIARTY, PROFIMATICS INC, HYDROCARBON PROCESSING, JULY 1985 Pg 51 - TABLE 1

UNIT	CAPACITY BPSD	TOTAL ENERGY DEMAND Btu/BbL	CALC'D TOTAL ENERGY DEMAND M Btu/D	REPORTED TOTAL ENERGY DEMAND M Btu/D	TOTAL ENERGY DEMAND %
CRUDE/VAC UNIT	80 000	133 700	10 696.0		247 592.6
LT ENDS FRACTINATION	1 000	56 300	56.3		1 303.2
NAPHTHA HDS	16 000	101 100	1 617.6		37 444.4
CATALYTIC REFORMER	16 000	480 200	7 683.2		177 851.9
ALKYLATION UNIT	5 500	368 600	2 027.3		46 928.2
FCC UNIT	24 000	341 500	8 196.0		189 722.2
TOTAL PROCESS UNITS		378 455	30 276.4		700 842.6
TOTAL REFINERY PREDICTED		378 455	30 276.4		
TOTAL REFINERY REPORTED	80 000	380 000		30 400.0	
TOTAL CRUDE FEED @ 6.0 MM BTU/BbL			480 000.0	480 000	
ENERGY EFFICIENCY - % ON CRUDE			6.31	6.33	

NOTE: THE CLOSE CORRESPONDENCE OF THESE RESULTS APPEARS TO JUSTIFY THE GENERAL VALIDITY OF THE "TOTAL ENERGY DEMAND" FACTORS IN REPRESENTING REASONABLE ENERGY EFFICIENCIES IN A MODERN REFINERY CONTEXT.

HOWEVER, IT SHOULD NOT BE OVERLOOKED THAT THE CONCLUSIONS OF THIS PAPER WITH THERMODYNAMIC AND PROTOCOL CONSIDERATIONS OF REFINERY ENERGY LOSSES WAS TO SUGGEST THAT GIVEN THE CURRENT REFINERY CONFIGURATIONS AND TECHNOLOGIES, CONCEIVABLE FURTHER IMPROVEMENTS COULD APPROXIMATE 23 PERCENT.

TABLE AP-E.15
USA
TYPICAL REFINERY UTILITY USAGE
****
SELECTED SPECIFIC ENERGY DEMANDS

UNIT	BASIS FEED/PRODUCT	FEEDSTOCK		SPECIFIC ENERGY DEMAND KCAL/T	SPECIFIC ENERGY DEMAND BTU/BBL
		°API	Sp Gr		
DISTILLATION				*10^3	*10^3
ATMOSPHERIC	FEED	25.0	0.9042	135	77.0
ATMOSPHERIC	FEED	40.0	0.8251	185	96.2
ATMOSPHERIC/ VACUUM LUBES	FEED	32.0	0.8654	305	166.4
ATMOSPHERIC/ VACUUM FLASH	FEED	32.0	0.8654	245	133.7
VACUUM - FUELS	FEED	16.0	0.9593	160	96.8
LPG	FEED	130.0	0.5411	165	56.3
NAPHTHA SPLITTING	FEED	50.0	0.7796	195	95.8
FCC GAS PLANT	FEED		0.0000		
CRACKING:					
FCC	FEED	20.0	0.9340	580	341.5
TCC	FEED	20.0	0.9340	545	320.9
VISBREAKING	FEED	9.0	1.0071	350	222.2
DELAYED COKING	FEED	9.0	1.0071	450	285.7
FLUID COKING	FEED	9.0	1.0071	-85	-54.0
FLEXI COKING	FEED		0.0000		
HYDROTREATING:					
NAPHTHA	FEED	45.0	0.8017	200	101.1
GAS OIL	FEED	25.0	0.9042	215	122.6
RESID	FEED		0.0000		
HYDROCRACKING:					
GAS OILS	FEED	20.0	0.9340	400	235.5
RESID	FEED		0.0000		

TABLE AP-E.15 - continued
USA
TYPICAL REFINERY UNIT ENERGY USAGE
****
SELECTED SPECIFIC ENERGY DEMANDS

UNIT	BASIS FEED/PRODUCT	FEEDSTOCK		SPECIFIC ENERGY DEMAND KCAL/T	SPECIFIC ENERGY DEMAND BTU/BBL
		°API	Sp Gr		
LUBES					
VACUUM - LUBES	FEED	22.0	0.9218	750	466.2
PDA - LUBES	FEED	12.0	0.9861	250	145.3
FURFURAL/NMP	FEED	25.0	0.9042	525	299.3
DEWAXING - MEK/DI-ME	FEED	27.0	0.8927	950	534.7
H-FINISHING	FEED	27.0	0.8927	200	112.6
BLENDING	PRODUCT	27.0	0.8927	30	16.9
REFORMING	FEED	45.0	0.8017	950	480.2
TREATING					
MEROX	FEED	35.0	0.8498	20	10.7
PDA - FUELS	PRODUCT	9.0	1.0071	250	158.7
AMINE	PRODUCT		PER TONNE	3 650	3 650.0
SULFUR PLANT	PRODUCT		PER TONNE	-1 000	-1 000.0
HYDROGEN PLANT	PRODUCT		1 000 Nm3	320	320.0
GENERAL					
ALKYLATION	PRODUCT	50.0	0.7796	750	388.6
POLYMERIZATION	FEED	110.0	0.5859	750	277.0
OLIGOMERIZATION	PRODUCT	50.0	0.7796	200	98.3
MTBE	PRODUCT	45.0	0.8017	700	353.8
GREASE	PRODUCT		PER TONNE	1 150	1 150.0
COKE CALCINING	PRODUCT		PER TONNE	1 750	1 750.0
ASPHALT BLOWING	FEED		PER TONNE	100	100.0
BLENDING - FUELS	FEED	35.0	0.8498	20	10.7

APPENDIX F PROCESS SIMULATION

The general overall benefit of process simulation is that it is the most cost effective approach to process prediction and evaluation. Refiners can evaluate process changes without physically doing it in the plant.

Process simulation can be done on virtually any process. However, the following are common examples.

Tower and flash drums

Distillation towers are probably the most frequent simulated process. Commercial simulation programs such as Simulation Sciences-PROCESS/PRO-II, Chemshare, HYSIM, and Aspen all have elaborate thermodynamic data bases and prediction procedures to yield accurate vapor and liquid separation and therefore, distillation results. Examples of common owner simulation are as follows:

Crude atmospheric and vacuum towers

These simulations can determine the expected yields from various crude blends. These crude change simulations can highlight areas of concern in downstream processing. Many times these simulations not only include pumparounds, but also side steam strippers so detailed product specifications and tower loadings can be accurately checked. With an anticipated crude blend and/or rate change, the refiner can determine:

- Product yields
- Pumparound duty requirements
- Flash zone temperatures
- Column section loadings
- Vacuum system requirements
- Stripping steam requirements (in the main column and side stream strippers)

Since these variables can affect each other, the simulation allows the refiner to recheck and reoptimize all variables simultaneously.

The tower simulation can also be used to evaluate possible cost effective efficiency improvements (even if crude rates and/or blends remain the same). For example, the economics of adding a preflash tower (the preflash tower vessel and main fractionator costs versus energy savings) can be evaluated. Another example is a vacuum tower transfer line redesign and its energy and yield benefits.

Fluid catalytic cracking unit columns

The FCCU main fractionator tower and Vapor Recovery Unit towers: Absorber-Stripper, Depropanizer, etc., are simulated for similar reasons as crude unit towers, but not as often. Pumparound duties are once again important variables in determining absorption & product yields and tower loadings.

Other product separation and stabilization

There are many other refinery columns that frequently can be simulated to determine tower capacity, separation effectiveness, energy improvements, control optimization, etc. These include:

- Lube Oil Vacuum Towers
- Coking Unit Combination Towers
- Naphtha Splitters
- Gasoline, or other product, Stabilizers
- Debutanizers
- Depropanizers
- Deethanizers
- Propane-Propylene Splitters

Many times these columns have stringent separation requirements necessitating high reflux ratios to achieve product specifications. Simulation models can assist in balancing these reflux ratios with condenser duties, reboiler duties, tray/packing loads, intermediate heat removals, and tower hydraulics.

Often, tower pressure drops can markedly affect K-valves. Thus, the tray-by-tray calculations of a tower simulation program not only achieve accurate separation results, but also can be used to predict tower delta P effects.

If these tower simulations show an area of concern (tower loading, product specification, etc.), the refiner can again use the tower simulation program to see:

1) if any adjustment in pumparound duties, tower conditions (pressure and temperature) stripping steam, and/or product yields and specifications can be used to solve the problem

2) how much reduction in capacity would be required to remove the problem(s).

3) the effect of a possible capital addition, such as more pumparound duties, bigger columns, deeper vacuums, and/or a change in tower internals.

Many times refiners see a range of possible tower feeds. The simulation model can be used to evaluate the extremes. Perhaps, the simulation results may highlight ways to improve day-to-day operations. For example, this approach may show the refiners the best tray (the tray with greatest temperature change) to control the tower heat balance (i.e., reboiler duty).

Heat exchange network

Heat exchange network units are prime candidates for frequent simulations to evaluate:

1) the most efficient way to exchange heat between streams in new processes, and;

2) heat integration improvement ideas in existing processes.

Examples of these heat exchange networks are:

- Crude Unit Preheat Trains
- FCCU Main Fraction Pumparound Circuits
- Coking Unit Combination Tower Pumparounds

Simulation Sciences HEXTRAN program and the Linhoff-March Pinch Technology (available in the Aspen simulation program) are used for this purpose.

It is important to note that these heat exchange network simulations should be used along with the main tower simulation until duties, rates, and temperatures are consistent in both models (to accurately evaluate the process).

Many times refiners monitor heat exchange performance with/against network simulations on a regular basis to establish exchanger cleaning schedules and benefits.

Reactor simulations

Simulations to predict reactor yields are being used more often these days. These reactor models include: Hydrotreaters, Cokers, FCCU's, Reformers, Alkylation Units, and Sulfur Plants. Although the catalyst and/or technology companies still provide the expected and guaranteed yields, refiners are seeing the need to evaluate day-to-day changes in feed rate and composition in these reactors to anticipate problems and operate efficiently.

For example, several factors affect the amount of propylene to alkylate, if any. These factors include:

1) The market for chemical-grade and polymer-grade propylene.

2) The propane/propylene yield.

3) The propane/propylene splitter capacity.

An alkylation model would allow the refiner to evaluate the effects before doing it in the field. Another example is the expected FCCU yields from varying amounts of residual cracking.

The Simulation Sciences-PROCESS/PRO-II and Chemshare programs allow users to specify reactors in different ways:

- plug flow and stirred-tank models, with in-line Fortran for the kinetics;
- equilibrium reaction equations and approach to equilibrium relationships, and;
- simpler conversion versus temperature relationships.

Refiners are also using reactor model simulations to more accurately time and justify catalyst change outs.

Piping networks

Piping network simulations are used to determine new and/or evaluate existing system hydraulics. This is especially important when evaluating/designing unit expansions.

It is often wise to use a piping network simulation program along with a heat exchange network for complex preheat trains with multiple parallel paths. Inaccurate pressure designations on streams in heat network programs will produce inaccurate heat network solutions.

Detailed equipment programs

Simulation Sciences-PROCESS/PRO-II, Chemshare, Aspen, and HYSIM programs all have equipment modules that allow users to model: pumps, compressors, heat exchangers, coolers, heaters, drums, etc.

These models afford accurate heat exchange, pressure drop, heat of compression, energy usage, etc., process calculations. One such example is interstage cooling economics for multi-stage compressors. A simulation model can be used to determine the heat exchange, knock out drum, and piping requirements (capital costs) of interstage cooling/separation versus compressor horsepower savings to determine an energy efficient compressor design or revamp.

These equipment modules, however, are not made for detailed mechanical design of equipment. There are many separate detailed equipment design programs that exist. These Rating and/or Design Programs include:

- Tower Trays and/or Packing
- Fired Heaters and Boilers
- Heat Exchangers
- Shell & Tube
- Plate & Frame
- Core
- Air Coolers
- Cooling Towers
- Pumps and Compressors
- Relief Valves

These can be accessed, if needed for specific problems.

Other uses

These simulation models are also used for non-simulation tasks, as well. For example, stream heating/cooling curves and physical properties can be generated for input to detailed equipment sizing software and/or specifications. Another common use is reconciling inconsistent field data by the use of material and energy balance algorithms.

Summary

The keys to using a simulation program effectively are:

- Understand how equipment is modelled in the program.

- Know that the simulations results are only as accurate as the input information (feed characterization and process specification).

- Confirm the model with existing operation, if possible.

- Invest the time to develop a model for future, as well as current studies. An accurate model is always used for more than its original intention.

APPENDIX G ECONOMIC ANALYSIS

Potential Value of Improvements in Crude Heat Exchange Train

Data =

- Design crude rate of 5.3 million tonnes per year
- Enthalpy change of 1 °C approximately 0.625 kcal/kg
- Value of fuel oil $65/tonne as of April, 1991
- Assume fired heater efficiency of 80%
- Heating value of fuel oil at 9 500 kcal/kg

Calculation of potential savings in reduced fuel oil consumption due to improved heat exchanger efficiency or heat recovery.

(5.3×10^6 tonnes/year) x (1 000 kg/tonnes) x (0.625 kcal/kg°C) x (kg/9 500 kcal)

($65/1000 kg) x (1/0.80) = $28 300 per degree centigrade per year

APPENDIX H ENVIRONMENTAL CALCULATIONS

Oil Loss

To the Teleajen River

Flow 26 400 m^3/day

Oil 34.3 mg/l

$$(26.4 \times 10^3 \frac{m^3}{d}) \times (100 \times 100 \times 100 \frac{cm}{m^3})(34.3 \frac{mg}{L} \times \frac{1L}{1000\ cc})$$

$$= 905.52 \times 10^6 \frac{mg}{d} \times \frac{1g}{1000mg} \times \frac{1\ Kg}{1000g}$$

$$= 905.52\ Kg/day \times \frac{1tonne}{1000\ Kg}$$

$$= 0.905\ tonnes/day$$

To the Corlatesti WWTP

Flow 11 320 m^3/day

Oil 250 mg/l

$$(11\ 320 \frac{m^3}{d})(100 \times 100 \times 100 \frac{cm}{m^3})(250 \frac{mg}{L} \times \frac{1L}{1000\ cc})$$

$$11.32 \times 10^3 \frac{m^3}{d} \times 10^6 \frac{cm}{m^3} \times \frac{250}{1000} \frac{mg}{L} \times \frac{L}{cc}$$

$$2830 \times 10^6 \frac{mg}{d} \times \frac{1}{1000mg} \times \frac{1}{1000g} kg \times \frac{1}{1000kg} tonne$$

$$= 2.83\ tonnes/day$$

Combined Oil Loss = 0.905 + 2.83
= 3.735 tonnes/d

Total Oil from the WWTP

Recycled	329 tonnes/day
Loss to River	3.7
Total	332.7 tonnes/day

Sulfur

Sulfur Produced:

Sodium Sulfite: 17 tonnes/month @ 25% strength

Na_2S: Na, 23 x 2 = 46

S, 32 = 32

78

% Sulfur in Na_2S = $\frac{32}{78}$ = 41%

Sulfur Shipped = 17 x .25 x 0.42 = 1.74 tonnes/month

Or 20.9 tonnes/y

To summarize, our conclusions are categorized into three areas; immediate, medium term, and long term.

Immediate

There were no observed conditions which could be changed during the environmental audit that would cause an immediate improvement of environmental improvement.

Medium term

The refinery has a significant problem of the loss of an excessive amount of oil from the process blocks. It is estimated that 330 tonnes of oil is lost to the waste water treatment plant per day. For various reasons, the block operators can not or do not observe the waste water flow and detect the times of significant oil loss. In some cases, even when it is known that oil leaks exist within the block, the operators can not stop the loss since the spare parts or maintenance personnel are not currently available. Therefore leaks will go uncorrected for weeks. The prevailing concept is the waste water treatment plant will collect the oil and return it to the process. It is not well known that the waste water treatment plant is undersized and a significant amount of oil, 3.7 tonnes per day is released in the partially treated waste water.

Therefore a two step program of waste reduction is recommended. One is to initiate an education program to the operators to make them more aware as to the actual loss of oil. The second is to install some method of alerting the operators when significant loss of oil is occurring. The most full proof is to use a form of an API type separator at the process block and have the operators responsible for the operations.

To determine the priority of installing local pretreatment API separators a detailed waste source should be conducted. This involves investigating each process block sewers to determine the flows and pollution loading. With these data the priority of constructing the local API could be scheduled.

The existing waste water treatment plant is not capable to treating the current waste flow to a level to meet the current standards. Part of the waste flow is treated on-site and discharged to the Teleagan River. Another part of the flow is provided with only partial or pic-treatment and pumped to the area waste water treatment plant at Carlatesi waste water treatment plant. The Carlatesi waste water treatment plant provides complete treatment for numerous industrial plants.

The existing on-site treatment facilities are not operating at their full potential. The following conditions were noted:

- The mechanical oil skimming / sludge scooping devices were not operable.

- The dissolved air flotation units were not operable.
- Fifty percentage of the activated sludge aerators were not operable.
- The biological sludge clarifiers were not functioning properly.
- The oily and biological sludge thickener was not operating.

The net effect is to have the waste water receive only partial treatment and not meet the current standards. Therefore two actions must be undertaken.

The first step to determine what changes must be made to each unit to have it work to its design and hydraulic capability. This maybe accomplished by providing spare parts, providing new higher quality parts, modifying the existing mechanisms. A detailed analysis of each system must be completed to determine what corrective actions will be successful.

The second stop, coordinates with the waste source study, is to develop a plan to waste water flow reduction and waste water treatment plant expansion. Before any waste water treatment plant expansion plans are undertaken, the source of the wastes must be analyzed. When sources are known, it may be possible to reduce the waste load by improving the design of the process unit generating the waste water. Many times the re-design of a process unit will increase its process efficiency and at the same time reduce the waste load to the waste water treatment plant. Therefore before any expansion of the waste water treatment plant is undertaken the source identification study must be completed.

The sludges produced from tank, oil / water separator or clarifier cleaning are currently tracked off-site to an oily sludge lagoon. At one time a vacuum filter and sludge incinerator system was installed. Due to numerous operational problems and excessive cost of operation, the system was abandoned in place.

The plant is currently investigating companies that could prepare the sludge by use of centrifuges. The plan is to remove the existing non-operating vacuum filters, install new centrifuges and incinerator feed pumps. It is believed the reactivated incinerator will be capable of processing the sludges normally produced.

The oily sludge, before the construction of the vacuum filter / incinerator system, was tracked off-site to an oily sludge lagoon. The plant estimates the quantity of oily sludge accumulated is 120 000 cubic meters.

The top of the oily sludge lagoon dike is above the natural grade of the area. During the site visit it was observed the dikes have had significant leakage problems. Oil break outs were observed in four locations. The plant has constructed a new lagoon and lined it with one-half to one meter of natural clay. The new lagoon is to be put in service within the next couple of months. The new lagoon dike top is at a lower elevation. It is intended to release the current dike break-outs by draining some of the sludge from the old lagoon to the new lagoon.

The two oily sludge lagoons are within 100 meters of the Teleajan River and at a higher elevation. Also, the local municipalities have an active municipal solid waste landfill adjacent to the oily sludge lagoons.

Two major environmental problems exist at this site. The first is to eliminate the hazard associated with the oily sludge lagoon. The second is the potential ground water contamination.

The plant already has developed process changes that will eliminate a portion of the sludge generation. That is they will stop using bentonite clay in their white oil processing. This in conjunction with the new centrifuges and incinerator re-activation will eliminate the accumulation of sludge.

Therefore the existing 120 000 cubic meters must be disposed. The two options normally applied for disposal are centrifugation and lime stabilization. Considering a large percentage of the sludge has been the bentonite acid sludge, it is recommended the lime stabilization be used for disposal.

The second potential problem is that of ground water contamination. As stated, the dikes had numerous break-outs of oil. The construction of the old lagoon bottom is unknown. Therefore the ground water near the old lagoon should be investigated to determine if there is any migration of contamination from the lagoon. A series of ground water sample wells should installed and the ground water sampled and analyzed. If pollution is indicated additional sample wells may be required to access the magnitude of the pollution. Once the magnitude of the pollution plume is identified, a ground water extraction and treatment program can be developed.

If no pollution is noted during the first sampling, a sampling program should be developed to periodically monitor the ground water until the existing sludge is removed and chemically treated.

During the two days of the environmental audit, it was noted the flares from the facility process units were emitting a significant black plums. It was reported that the flare tips are of the smokeless type supplied with atomization steam. It was reported the steam has been shut off to conserve energy. It was also stated the process block operator does not know when his unit is flaring.

Therefore a two phased program should be developed to control both the length of time a unit flares and the amount of air pollution generated due to incomplete combustion. The first phase should be the installation of some alarm device to let the block operator know one of his units is flaring. This could be as simple as pressure alarm to as complex as using a mass flow meter in the various flare vent lines. In any case, operator should be alerted that an upset condition is occurring. An alternate may be to install an upgraded process controller that could reduce the frequency of flaring.

The second phase could be the installation of a flow meter in the flare riser to automatically turn on the atomization steam. This meter could be a mass flow type.

Long term

The refinery is equipped with an amine hydrogen sulfide scrubber / stripper and a two reactor Claus system. During the time of the environmental audit, the units were not operating. The reason given was they ran out of amine last year and were leaving the hydrogen sulfide in the fuel gas to be combusted in the process heaters. At the process heaters, they were by-passing the air pre heaters because of the high SO_3 level in the heater exit gas. The air preheater would drop the gas temperature to the condensation temperature of SO_3 and cause excessive corrosion. Therefore an excessive amount of sulfur is being emitted to the atmosphere.

Therefore to conserve energy, minimize corrosion and recover sulfur, the inoperative amine / claus system should be revamped.

As stated in the mid-term items, the existing acid / oily sludge in the sludge lagoons should be stabilized to prevent the potential of ground water contamination. This effort will require in excess of $10 million, U.S.

If the refinery continues to purchase high sulfur crude oil, flue gas, desulfuration, or harsher hydro streaming of the fuel oil must be considered.

ABBREVIATIONS

°API	deg API (gravity of oil fractions, defined by API)
°C	degree Celsius
°F	degree Fahrenheit
%	per cent
/	per (e.g., tonnes/day)
A	ampere
ACFM	actual cubic feet per minute
AFBC	Atmospheric Fluidized Bed Combustion
API	American Petroleum Institute
ASTM	American Society of Testing Materials
BACT	best available control technology
BFW	boiler feed water
BOD	biological oxygen demand
BPCD	barrels per calendar day
BPSD	barrels per stream day
BS&W	Basic, Sediment and Water
BTX	benzene toluene xylene
Btu	British thermal units
C.F.	characterization factor
CCR	continuous catalyst regeneration
COD	chemical oxygen demand
CV	calorific value (heat of combustion)
DCS	distributed control system
DEA	Diethanolamine
EP	end point
EPA	Environmental Protection Agency (U.S.)
FBP	final boiling point
FCC	fluid catalytic cracking
FGD	flue gas desulfurization
FOE	fuel oil equivalent
G	giga(10^9)
GCV	gross calorific value
GJ	giga joules
HC	hydrocarbons
HDS	hydrodesulfurization
HP	high pressure
Hg	mercury
Hz	hertz

227

IBP	initial boiling point
IGT	Institute of Gas Technology
ISBL	inside battery limit
J	joule
KRW	Kellogg Rust Westinghouse
LHSV	Liquid Hourly Space Velocity
LP	linear programming/low pressure
Lube	Lubricating
M	mega(10^6)
MEA	Monoethanolamine
MEK	methyl ethyl ketone
MHC	mild hydrocracking
MON	motor octane number
MPa	Megapascal, a unit of pressure
MSW	municipal solid waste
MTBE	methyl tertiary butyl ether
MVA	mega volts ampere
MVAR	mega voltampere reactive
MW	mega watts
NAAQS	National Ambient Air Quality Standards
NCV	net calorific value
NO_x	Oxides of Nitrogen
NPDES	National Pollutant Discharge Elimination System
OSBL	outside battery limit
OVA	Organic Vapor Analyzer
PFBC	Pressurized Fluidized Bed Combustion
PONA	Paraffins, Olefins, Naphthanes and Aromatics
Pa	pascal, a unit of pressure
RCC	reduced crude conversion
RON	research octane number
RTD	Resistance Temperature Detector
RVP	Reid Vapor Pressure
S.R.	Straight Run
SCFD	standard cubic feet per day
SCFH	standard cubic feet per hour
SCFM	standard cubic feet per minute
SG	specific gravity
SO_x	Oxides of sulfur
SRC	solvent refined coal
T	tera (10^{12})
TBP	true boiling point
TDS	total dissolved solids

TEFC	totally enclosed fan cooled
TEL	tetraethyl lead
TOC	total organic carbon
TSS	Total Suspended Solids
UOP K	UOP Characterization Factor
V	volt
VOC	volatile organic compound
WWTP	wastewater treatment plant
WATSON K	Watson Characterization Factor
XP	explosion proof
atm	atmosphere or atmospheres
bar	bar
cP	centipoise
cSt	centistokes
cal	calorie
cm	centimeters
cps	cycles per second
day	day
ft^3	cubic feet
ft	feet or foot
g	gram
gal	gallons
gpm	gallons per minute
h	hour
hp	horse power
in	inch or inches
k	kilo
kA	kiloamperes
kPa	kilo pascal, a unit of pressure
kV	kilovolts
kWh	kilowatt hour
kcal	kilo calories
kcal	kilo calories
kg	kilogram
kg/cm^2	kilogram per square centimeter
lb	pound or pounds
liter	liter or litre
m	meter or metre
max.	maximum
mg	milligram
mi	mile
million	million(10^6)

min	minute
min.	minimum
mm	millimeters
mol	mole
n	normal
ohm	ohm
pH	pH, a measure of acidity or strength of a base.
percent	percent(or %)
phase	phase (electrical)
ppm	parts per million
ppmv	parts per million (volume)
ppmw	parts per million (weight)
ppb	parts per billion
psi	pounds per square inch
psia	pounds per square inch absolute
psig	pounds per square inch gauge
ptb	pounds per thousand barrels of oil
rpm	revolutions per minute
sec	seconds
tonne	metric ton
tonnes	metric tons
vol	volume
wt	weight
y	year