PN-ABN-582

EVALUATION AUDIT REPORT
BULGARIAN PETROLEUM REFINERY
NEFTOCHIM, BOURGAS

A SELECTIVE REFINERY ANALYSIS FOR: OPERATION, ENERGY USE, ENVIRONMENTAL IMPACTS AND IMPROVEMENT OPPORTUNITIES

MAY, 1992

PREPARED BY: DAVY MCKEE CORPORATION, CHICAGO, IL USA

U.S. EMERGENCY ENERGY PROGRAM FOR EASTERN AND CENTRAL EUROPE

U.S. AGENCY FOR INTERNATIONAL DEVELOPMENT
BUREAU FOR EUROPE
WASHINGTON, D.C. 20523

EVALUATION AUDIT REPORT
BULGARIA PETROLEUM REFINERY
NEFTOCHEM

A SELECTIVE REFINERY ANALYSIS FOR:
OPERATION, ENERGY USE, ENVIRONMENTAL IMPACTS
AND IMPROVEMENT OPPORTUNITIES
MAY, 1992

PREPARED BY: DAVY MCKEE CORPORATION, CHICAGO, IL USA
300 SOUTH RIVERSIDE PLAZA
SUITE 1800
CHICAGO, IL 60606
(312) 669-7000

LEAD / PROCESS: NICK ADAMS
INSTRUMENTATION: THOMAS J. DEMPSEY
ELECTRICAL: THOMAS J. DEMPSEY
MECHANICAL: GEORGE W. HAMILTON
LEAD AUTHOR: NICK ADAMS
PROJECT MANAGER: P.D. AGRAWAL

U.S. EMERGENCY ENERGY PROGRAM FOR EASTERN AND CENTRAL EUROPE

U.S. AGENCY FOR INTERNATIONAL DEVELOPMENT
BUREAU FOR EUROPE
OFFICE OF DEVELOPMENT RESOURCES
ENERGY AND INFRASTRUCTURE DIVISION
WASHINGTON, D.C. 20523

USAID CONTRACT EUR-0015-C-00-1011-00

REFINERY EVALUATION AND AUDIT
NEFTOCHIM REFINERY, BOURGAS, BULGARIA
TABLE OF CONTENTS

EXECUTIVE SUMMARY

A. INTRODUCTION

1. OBJECTIVES
2. REFINERY SELECTION
3. SUMMARY OF FIELD ACTIVITIES
4. REFINERY DESCRIPTION
5. TYPES OF ENERGY IMPROVEMENT OPPORTUNITIES
6. TYPES OF ENVIRONMENTAL EMISSIONS IMPROVEMENTS

B. REFINERY ENERGY BALANCE

1. OPERATING UNIT ENERGY USE

2. FUEL SYSTEM
2.1. Fuel Sources
2.2. Fuel Distribution
2.3. Fuel Users

3. STEAM SYSTEM
3.1 Steam Generation
3.2 Steam Levels
3.3 Steam Users

4. ELECTRIC POWER SYSTEM
4.1 Electricity Sources / Generation
4.2 Electricity Distribution System
4.3 Electric Power Users

5. COOLING WATER SYSTEM
6. AIR COOLERS
7. ENERGY RECOVERY SYSTEMS

C. REFINERY FLEXIBILITY

1. OVERVIEW

2. ATMOSPHERIC DISTILLATION UNIT NO. 5
2.1 Process Flow Diagram
2.2 Feedstock
2.3 Unit Flexibility
2.4 Operational Sensitivity
2.5 Product Specifications
2.6 Unit Yields

2.7 Unit Modification Potential
2.8 Capacity Increase Potential
2.9 Operating Practices
2.10 Replacement / Shutdown Observations

3. FLUID CATALYTIC CRACKING UNIT
3.1. Process Flow Diagram
3.2. Feedstock
3.3. Unit Flexibility
3.4. Operational Sensitivity
3.5. Product Specifications
3.6. Unit Yields
3.7. Unit Modification Potential
3.8. Capacity Increase Potential
3.9. Operating Practice
3.10 Replacement / Shutdown Observations

4. CATALYTIC REFORMING UNITS CR-1 & CR-2
4.1 Process Flow Diagram
4.2. Feedstock
4.3. Unit Flexibility
4.4 Operational Sensitivity
4.5. Product Specifications
4.6. Unit Yields
4.7. Unit Modification Potential
4.8. Capacity Increase Potential
4.9. Operating Practices
4.10 Replacement / Shutdown Observations

5. DISTILLATE HYDROTREATING UNIT NO. 3
5.1. Process Flow Diagram
5.2. Feedstock
5.3. Unit Flexibility
5.4. Operational Sensitivity
5.5. Product Specifications
5.6. Unit Yields
5.7. Unit Modification Potential
5.8. Capacity Increase Potential
5.9. Operating Practices
5.10. Replacement / Shutdown Observations

6. PLANT LIMITATIONS
6.1. Unit Capacities
6.2. Product Requirements
6.3. Fuel System
6.4. Steam System
6.5. Electric Power System
6.6. Tankage
6.7. Other Limitations

D. **HEAT CONSERVATION**

1. HEAT TRANSFER PRACTICES
2. UNIT HEAT BALANCES

3. HEAT TRANSFER EQUIPMENT ANALYSIS
3.1. Fired Heaters
3.2. Heat Exchange Trains
3.3. Waste Heat Recovery
3.4. Economics of Increasing Surface Areas

4. STEAM SYSTEM
4.1 Steam Balance and Utilization
4.2. Selection of Pressure Levels
4.3 Condensate System
4.4 Insulation
4.5. Potential Effect of Energy Savings Projects to Steam Balance

5. HEAT REJECTION SYSTEMS
5.1 Cooling Water Systems
5.2. Air Coolers
5.3. Equipment, Piping and Stream Heat Losses
5.4. Recovery Systems
5.5 Tracing and Temperature Maintenance Systems

6. USE OF HOT OIL LOOPS

E. **MECHANICAL DRIVE SYSTEMS**

1. COMPRESSOR/FANS
2. SPECIAL PUMPS
3. ELECTRIC MOTORS
4. STEAM TURBINES
5. SPECIAL EQUIPMENT

F. **MAINTENANCE / MECHANICAL OBSERVATIONS**

1. OVERALL IMPRESSIONS

2. UNIT REVIEW
2.1 Crude Units: AD-4, AD-5 and VD-1
2.2 Fluid Catalytic Cracker (FCC)

3. EQUIPMENT CONDITION SUMMARY
3.1 Fired Heaters and Boilers
3.2 Heat Exchangers
3.3 Vessels
3.4 Rotating Equipment
3.5 Steam System

3.6 Piping and Valves
3.7 Instrumentation
3.8 Electrical Equipment
3.9 Corrosion
3.10 Insulation Condition
3.11 Specialty Items

4. MAINTENANCE
4.1 Policies
4.2 History
4.3 Current Practices

G. **ENERGY LOSS MONITORING SYSTEM**

H. **FUEL SWITCHING/UTILIZATION**

1. REFINERY FUEL SYSTEM

2. COAL AT THE NEFTOCHIM REFINERY
2.1 Availability and Characteristics of Coal
2.2 Potential for Use
2.3 Economics of Use

I. **REFINERY EMISSIONS**

1. SUMMARY OF ENVIRONMENTAL SURVEY
1.1 Refinery Sulfur Balance
1.2 Air Emissions
1.3 Water Quality
1.4 Solid Waste Disposal
1.5 Impact of Maintenance Practices in Generating Emissions
1.6 Evaporation Losses
1.7 Loss of Products to Solvents

2. HANDLING OF MATERIALS
2.1 Tetraethyl lead (TEL)
2.2 Aromatics
2.3 Solvents
2.4 Halogenated Hydrocarbons
2.5 Heavy Metals
2.6 Sulfur
2.7 H_2SO_4, HF
2.8 Combustion Products
2.9 Tars

3. MEASUREMENTS OF EMISSIONS

4. SPECIFIC RECOMMENDATIONS

J. **ENERGY EFFICIENCY IMPROVEMENT**

1. IMMEDIATE OPPORTUNITIES
2. MEDIUM TERM OPPORTUNITIES
3. LONG TERM OPPORTUNITIES
4. FURTHER WORK REQUIRED

K. **ENVIRONMENTAL EMISSIONS REDUCTIONS**

1. IMMEDIATE OPPORTUNITIES
2. MEDIUM TERM OPPORTUNITIES
3. LONG TERM OPPORTUNITIES

APPENDICES

APPENDIX A. SUPPORTING PLANT DATA
APPENDIX B. CHARACTERIZATION REPORT REFERENCE
APPENDIX C. CALCULATION SHEETS
AP-C.1 Justification for "In-situ" Oxygen Analyzers
AP-C.2 Computer Simulation

APPENDIX D. ELECTRICAL DISTRIBUTION SYSTEM

APPENDIX E. ABBREVIATIONS

APPENDIX F. USAID TERMS OF REFERENCE

LIST OF TABLES

Table No.	Title	Page No.
A.4.1	REFINERY UNITS	A-5
A.4.2	OVERALL MATERIAL BALANCE (1990)	A-7
B.1.1	ENERGY EFFICIENCY COMPARISON	B-2
B.2.1	FUEL GAS DATA	B-4
B.2.2	FUEL OIL DATA	B-5
B.4.1	1989 ELECTRICAL USAGE	B-10
C.1.1	CRUDE THROUGHPUT	C-1
C.1.2	CRUDE DISTILLATION PRODUCTS	C-2
C.2.1	1989 PROCESSED CRUDE BREAKDOWN	C-4
C.2.2	ATMOSPHERIC DISTILLATION PRODUCTS	C-7
C.3.1	HDS AND FCC FEEDSTOCK PROPERTIES	C-15
C.3.2	FCC UNIT OPERATING CONDITIONS	C-16
C.3.3	TOTAL HDS/FCC COMPLEX FEEDS AND PRODUCTS	C-17
C.3.4	HDS UNIT FEEDS AND PRODUCTS	C-18
C.3.5	FCC UNIT FEEDS AND PRODUCTS	C-19
C.4.1	CATALYTIC REFORMING YIELDS	C-26
C.5.1	HYDROTREATING UNITS	C-29
C.5.2	HDT-3 DESIGN FEEDSTOCK PROPERTIES	C-31
C.5.3	HDT-3 MATERIAL BALANCE	C-33
F.3.1	SOVIET BUILT TURBOGENERATORS	F-5
I.1.1	SULFUR BALANCE	I-1
I.1.2	AIR EMISSIONS	I-2
I.1.3	WASTE WATER TREATMENT PLANT CONCENTRATIONS	I-3
AP-A.1	GASOLINES PRODUCT SPECIFICATIONS	Ap-A-2
AP-A.2	JET FUEL PRODUCT SPECIFICATIONS	Ap-A-3
AP-A.3	DIESEL FUEL PRODUCT SPECIFICATIONS	Ap-A-4
AP-A.4	FUEL OIL PRODUCT SPECIFICATIONS	Ap-A-5
AP-B-C.1.1.1	HISTORY OF NEFTOCHIM REFINERY UNITS	Ap-B-3
AP-B-C.1.1.2	OVERALL MATERIAL BALANCE (1990)	Ap-B-4
AP-B-C.1.4.1	NEFTOCHIM CRUDE OIL AND PRODUCT PROPERTIES	Ap-B-10
AP-B-C.1.4.2	NEFTOCHIM OPERATING UNIT - SHUTDOWNS IN 1990 (Hours)	Ap-B-11
AP-B-C.1.4.3	NEFTOCHIM CRUDE DISTILLATION PRODUCTS	Ap-B-12
AP-B-C.1.5.1	NEFTOCHIM FACILITY AIR EMISSIONS	Ap-B-15
AP-B-C.1.5.2	NEFTOCHIM WASTEWATER EFFLUENT CHARACTERISTICS	Ap-B-15
AP-B-C.1.10.1	NEFTOCHIM CRUDE OIL TBP DATA	Ap-B-28
AP-B-C.1.10.2	NEFTOCHIM LPG (LIQUIFIED PETROLEUM GAS) SPECIFICATIONS	Ap-B-29
AP-B-C.1.10.3	NEFTOCHIM GASOLINE PRODUCT SPECIFICATIONS	Ap-B-30
AP-B-C.1.10.4	NEFTOCHIM JET FUEL PRODUCT SPECIFICATIONS	Ap-B-31
AP-B-C.1.10.5	NEFTOCHIM FUEL PRODUCT SPECIFICATIONS	Ap-B-32
AP-B-C.1.10.6	NEFTOCHIM FUEL OIL SPECIFICATIONS	Ap-B-33

LIST OF FIGURES

Figure No.	Title	Page No.
1	Simplified Refinery Block Flow Diagram	C-3, Ap-B-2
2	Simplified Process Flow Diagram Atmospheric Distillation Unit AD-5	C-5, Ap-B-22
3	Simplified Process Flow Diagram Section 100 - Hydrodesulfurization Unit	C-12, Ap-B-25
4	Simplified Process Flow Diagram Section 200 - FCC Unit	C-13, Ap-B-26
5	Simplified Process Flow Diagram Section 300 - FCC Gas Concentration Unit	C-14, Ap-B-27
6	Simplified Process Flow Diagram Catalytic Reforming Unit CR-2	C-23, Ap-B-24
7	Simplified Process Flow Diagram Diesel Hydrotreating Unit HDS-3	C-30, Ap-B-23
8	Crude Unit Simulation Diagram	Ap-C-5
9	Electrical Symbols	Ap-D-2
10	110 KV Overhead Electric Power Line Scheme	Ap-D-3
11	Thermal Power Section One Line Dwg.	Ap-D-4
12	Thermal Power Section Distribution Unit	Ap-D-5
13	110/6 KV Transformer Substation One Line Drawing	Ap-D-6
14	The Petroleum - Sector System	Ap-F-3

EXECUTIVE SUMMARY

Early in 1991, the United Agency for International Development (USAID) retained the Chicago office of the Davy McKee Corporation (DMC) to perform a technical study of the two refineries that comprise the Petroleum Refining Industry of Bulgaria. The results of the study are presented on two levels: refinery industry characterization and evaluation and audit of a selected refinery and its units.

The project started with meetings in early December 1990, between the United States and Bulgarian energy officials. During the meeting, a plan and schedule was developed for participation by Bulgaria in the U.S. Emergency Energy Program. The evaluation and audit report for the selected Neftochim refinery presented herein contains the elements of review agreed upon at these initial meetings.

The Bulgarian petroleum processing industry consists of three operating refineries in the entire country. The Neftochim facility at Bourgas, strategically located on the Black Sea, is the largest complex with most sophisticated processing capabilities. The refinery processes most crude and is the most important complex in the country. Hence Neftochim was the logical choice for the Evaluation and Audit Study.

A refinery evaluation and audit report has been produced for Neftochim refinery. The report describes the data collected by DMC team on various units and equipment within the refinery. The report presents the opportunities for energy improvement, modernization, and reduction of emissions for the refinery. Order-of-magnitude capital requirements and simple payback times associated with some of the identified opportunities also form part of this report.

At the outset of the project, DMC teams were organized for both characterization and evaluation efforts and consisted of professionals with many years of experience in their respective engineering disciplines. the technical disciplines represented within the teams covered the areas of process, environmental, mechanical, electrical, and instrumentation engineering.

- Initially, there was a preliminary, or reconnaissance visit to Bulgaria during which a rather detailed questionnaire was furnished to the refinery managers.

- The second stage was assembly in Chicago of the DMC characterization and evaluation teams for a week of orientation. At the conclusion of this meeting, the teams departed Chicago and arrived at the Neftochim refinery complex in Bulgaria, on July 22, 1991.

- The third stage of the evaluation and audit effort consisted collection of data through meetings with operating managers and engineers of individual units within the refinery. Due to the schedule constraints four representative process units within the refinery were selected for the evaluation. The units selected were an Atmospheric Crude Distillation Unit, a Catalytic Reformer, a Diesel Hydrodesulfurizer, and the Fluid Catalytic Cracking (FCC) Unit.

During DMC team's stay at the refinery, excellent cooperation and support was provided by the operating and engineering staff. Specific data was collected on following topics:

a) Feedstocks and its variability
b) Product yields and specifications
c) Operating conditions
d) Mechanical conditions and ages of equipment
e) Utility consumptions
f) Effluent characteristics and quantity
g) Changing environmental regulations

The Neftochim refinery is part of a petrochemical complex consisting of Petroleum Processing Units, Petrochemical units, Central Power Generation Plant, Utilities Generation Units, Feedstock/product Storage and Loading facilities, and other supporting ancillaries associated with a complex of this type.

The crude oil throughput capacity of the refinery is about 12 million tonnes per year. Over the years the plant has gone through debottlenecking revamps, so that it can process up to 14 million tonnes of crude oil per year. About sixty percent of the crude oil processed was Soviet Export type and the remainder came from Middle Eastern countries. Due to recent problems in both Soviet Union and Middle East and lack of hard currency, Neftochim received only thirty three percent of crude capacity during 1991. Year before, the throughput was about 7.4 million tonnes for the year.

Due to the current reduced throughput, only two out of five crude distillation units were in operation. The refinery has catalytic reformers, but the octane value of reformate is relatively low. The FCC unit was revamped recently by the refinery staff to produce 92 octane gasoline. Other components of the high octane gasoline pool are Alkylate, and MTBE. The grades of leaded gasoline produced vary in octane number from 86 to 96. Other refinery products include Liquified Petroleum Gas (LPG), Jet Fuel, Diesel Fuels, Fuel Oils, Petrochemical Feedstocks, Bitumen, and Sulfur.

Some medium sulfur diesel fuel oil and a small quantity of unleaded gasoline is produced for export purposes.

Bottoms of the Barrel or heavy residue is processed partly in a Thermal Cracker and partly converted to Bitumen.

Most of the electric power utilized by the complex is produced on site and the factory power system is also connected to the national grid. Cooling water used in the complex is pumped from the nearby lake and the liquid effluent, after treatment, pumped back downstream eventually flowing to the Black sea. Most of the catalysts, chemicals, and additives are imported from outside the country.

The steam to the refinery is supplied by the Central Power plant. The refinery fuel consists of the refinery gases and imported natural gas. In addition, some relatively high sulfur fuel oil is also used as fuel.

The refinery has several environmental concerns. The sulfur recovery is accomplished in a two stage Claus units with an efficiency of 95 - 96 per cent. Therefore, because of low efficiency of sulfur recovery and high sulfur content of the fuel oil, the sulfur content of the atmospheric emissions is relatively high. Also, effluent water quality does not conform to current state regulations.

The solid wastes from the production facilities is sent to landfill. Existence of on-site refinery oily sludge amounting to about 400 000 cubic meters presents a serious remediation/disposal problem.

OPERATIONAL FLEXIBILITY AND MODERNIZATION OPPORTUNITIES

The refinery equipment design was based only on Russian Export Blend crude oil. Virtually no attention was directed towards providing operational flexibility in terms of varying feedstocks. The product specifications were set primarily for the domestic market. Now with the opening of Bulgaria to world trade and development of free market economy in the country, feedstocks can be purchased from any source and refinery products will have to compete on the international market.

A recapitulation of major observations as identified for improvement in operational flexibility and product specifications for Neftochim refinery is presented below:

1) The refinery has a very limited underground crude oil storage capacity and is unable to provide any flexibility in terms of reasonable feedstock blending to match the properties of the feedstock with the design case. Operating in this manner results in poor operating efficiency and less than optimum production. In any case, the existing underground storage of crude oil is not acceptable environmentally in western countries. It is recommended that the refinery should consider at least one month above ground storage capacity along with adequate mixing and blending facilities.

2) The refinery needs a working linear programming (LP) model to predict day to day operation based on the varying feedstocks and changing markets for products. To support the LP model they will also need process simulation models. Process simulation models are also needed to analyze refining systems through mathematical modelling in order to optimize unit operators.

3) Neftochim needs to optimize their gasoline blending by installing octane monitors and computer controlled blending operation. Similar installations in the States have had a payout of less than a year.

4) The refinery must install a catalytic reformer for the production of high octane gasoline in order to improve the overall octane value of the gasoline pool. The other refinery units: Fluid Catalytic Cracking (FCC), Alkylation, Isomerization, MTBE and/or TAME, and Thermal Cracker, have to be integrated with the new reformer to meet future demand for non-leaded gasoline. Some of the major projects that are suggested for reformulation of gasoline are presented below:

   - Install Catalytic Reformer with Continuous Catalyst Regeneration
   - Convert the existing Reformer to an Isomerization unit.

- Revamp the FCC unit by adding a catalyst cooler and high efficiency cyclones.

- Modernize and optimize the Alkylation operation.

- Replace reciprocating compressors with more reliable and flexible centrifugal machines.

5) The Crude and Vacuum units will have to be revamped for operational flexibility. For example: Addition of pumparounds to the atmospheric columns, optimization of the crude heat exchange train, replacement of internals in the crude and vacuum columns, etc., is recommended.

6) Diesel and Fuel oils produced at the refinery are relatively high in sulfur content. Additional hydrotreating capacity is needed to meet the current and future product specifications.

7) Vacuum unit bottoms or BOTTOM OF THE BARREL processing needs to be studied thoroughly. The study may result in several new units, to convert residual products into more profitable lighter hydrocarbons.

8) Process control strategy and instrumentation should be modernized with the incorporation of advance control concepts, in order to improve and optimize operations, resulting in improved profitability.

9) The refinery needs a structured maintenance and spare part inventory program. There are commercially available computer programs to accomplish this. Reduced downtime through more efficient planning and maintenance execution will result in greater throughput and thus increased production for the investment in place. Effective spare parts and inventory control will yield operating cost savings.

ENERGY EFFICIENCY IMPROVEMENT OPPORTUNITIES

The middle management of the Neftochim refinery is aware of the need for benefits and general features/aspects of energy saving programs. However, the implementation of these programs was stated to generally meet with shortages of financial means and a different order of priorities resulting from goals set by top management or the result of central government planning directives.

A recapitulation of some the observations as identified for improvement of energy efficiency is presented below:

1) Neftochim must develop and implement a comprehensive energy conservation program. Savings are believed to easily pay for any investment required.

2) The largest user of refinery fuel are the process furnaces and steam generating boilers. The optimization of furnace operation can be achieved by replacing of obsolete burners and by minimizing the excess air for combustion. Air preheaters and/or waste heat boilers are also recommended to improve the efficiency of these units. However, many of the refinery furnaces are of

somewhat primitive and highly inefficient design. These should be replaced with modern designs.

3) Implement a program to minimize steam condensate contamination and maximize the return of the condensate to boilers thus reducing the high cost. This will require training in selection, operation, and maintenance of stream traps.

4) The efficiency of the FCC operation can be improved by adding a power recovery system.

5) The use of extraction type steam turbines in the process units should be considered. These turbines can provide reliable operation and low level heating steam for process use. Hence overall steam, electric power, and fuel balance can be optimized, resulting in lower utility costs.

6) Repair and upgrade cooling towers. Optimize the cooling water circulation system, which will lower operating costs.

7) Install secondary sealing systems on hydrocarbon storage tanks.

8) Consider revamping the Acid Gas Removal by replacing the solvent or increasing its concentration, thus saving heat energy in the solvent regeneration process.

9) Install liquid ring pumps on Crude Vacuum Distillation Units.

10) Improve operation of air fin coolers by installing variable speed or adjustable pitch equipment. This can lower utility costs.

ENVIRONMENTAL EMISSION REDUCTIONS

The environmental area is one that Neftochim needs to attend to immediately. As mentioned before the complex is not meeting the current Bulgarian government regulations in the areas of both liquids and air emissions. They also have a significant costly problem with solid wastes that must be remedied.

The estimated cost of minimizing environmental problems at Neftochim as recommended in this report is in excess of $60 million. There are separate solutions to emission issues in the Bulgarian refining industry and it will be necessary to thoroughly analyze all variables before reaching the optimum technical, economic and social solution. The problem is significant and must be addressed immediately.

The potential legislated and social changes in the environmental area will profoundly affect the operation and/or competitive position of the Neftochim refinery, both in the immediate and long term. Legislated changes could include:

- Initially reduction of and eventually complete elimination of lead additives which are currently used to improve the octane rating of the gasoline pool.

- Reduction of benzene concentration (which is used to enhance octane values) of the gasoline pool as it is a reported carcinogen.

- Reduction of both sulfur and aromatics allowed in diesel fuel.

- Reduction of sulfur in fuel oils to minimize SO_2 release to the atmosphere.

- Environmental pollutant reductions to prescribed limits. These would include volatile organic compounds (VOC), sulfur, and particulates to air, along with specific toxic materials in wastewaters.

- Groundwater testing around the complex to monitor and then remediate any potential contamination of the water table.

A recapitulation of some of the observations as identified for reduction of environmental emissions, considering air, water and solids, from Neftochim is presented below:

Air

Reduction of air emissions fall into three categories:

- Vapor control on storage tanks to reduce emissions of volatile hydrocarbons.

- Improved combustion control of fired heaters and boilers to reduce CO and NOx emissions.

- Desulfurization of fuel gas and fuel oils, or consider fuel gas desulfurization (FGD).

Water

1) The complex is losing an excessive amount of oils to the Wastewater Treatment Plant (WWTP). They need a comprehensive program to minimize this loss of oil and extra burden on WWTP.

2) The complex has five (5) two compartment API separators requiring cleaning. They are in the process of installing mechanical cleaning equipment (for oil separation and sludge removal) in one of the separators. It is recommended to install similar mechanical equipment in the remaining separators. Total estimated cost of the equipment is $300,000.

3) Determine the extent of groundwater pollution and direction of the plume flow pattern.

4) Currently the sewers in the complex are interconnected. They should be separated - storm water, refinery wastewater, and petrochemical wastewater.

Solid

1) Excavate, blend, stabilize, and bury 400,000 cubic meters of oily sludge being stored. Total estimated cost of this operation will be in excess of $50 million.

2) Install new state-of-the-art gear boxes on aerators for the first and second stage activated sludge tanks in the WWTP. Total cost of these low maintenance gear boxes will be $4.5 million.

3) Old aeration lake #1 needs to have bottom sludge tested and perhaps stabilized. Estimated cost of this work is $13 million.

The following is a listing of equipment that the refinery urgently needs in order to monitor, understand and implement various pollution controls:

- Portable Volatile Organic Compound (VOC) Analyzer.
- Oil/water interface control of the Desalters.
- Belt oil skimmers in cooling tower basins.
- Replace the non-operating Dissolved Air Floatation (DAF) units.

In summary, the opportunity, and need, for improvement in energy conservation, operating practices and environment emission reduction are significant. The energy improvement opportunities uncovered through this study should be undertaken immediately, as the return on investment is excellent, with paybacks less than a year in many cases.

A. INTRODUCTION

ACKNOWLEDGEMENTS

The Davy McKee Evaluation Team would like to express its gratitude to the management and staff of the Noftochim Refinery at Bourgas for their excellent cooperation and assistance. Special thanks are due also to the following individuals and all the personnel in their department.

Sava Karaenev	Deputy General Director
Christo Hadjikolev	Vice General Director
Kostadin Karamanov	Senior Mechanical Engineer
Peyo Skenderov	Director of Automation Center
Iliya Kazangiev	Deputy Director of Utility Works
Georgi Todorov	Head of Electrical Engineering Department
Atanas Sokurov	Catalyst Process Department (FCC)
Todor Totov	Project Manager (FCC)
S. Ivanov	Project Manager (Distillation)
D. Trepechov	Deputy Director of Project Institute
Ivan Marev	Environmental Protection Manager
M. Kostadinov	Water Treatment Manager
Prodon Prodanov	Project Manager
Ilka Christova	Interpreter
Evgenia Trepetchova	Interpreter

1. OBJECTIVES

The objective of this report is to present opportunities for energy improvement and reduction of emissions for the Neftochim refinery in Bourgas, Bulgaria. Other defined and specified goals include a consideration of refinery operating flexibility, an observation of the plants general condition, and comments on maintenance practices for their effect on operations. It is a further objective to characterize

modifications for achieving expected benefits in accordance with the magnitude of effort and capital requirements anticipated. This report details the results of an Evaluation & Audit Study performed on selected process units. The conclusions of this study are series of recommendations categorized as follows:

1. Immediate minimum cost recommendations; This category includes low cost modifications to the refinery that will be relatively inexpensive and easy to implement. The refinery can implement these recommendations with its internal resources.

2. Short term intermediate cost recommendations; This category includes modifications and/or additions to the refinery that will be characterized by costs related to equipment purchases, and/or changes to process operating conditions that could be considered significant. Implementation of these recommendations requires outside resources and appropriate justification.

3. Long term substantial cost recommendations; This category includes significant modifications to current processing capabilities, or installation of additional process units to improve the refiner's competitive refining position into the 21st century. Implementation of this type of recommendation requires outside resources and justification.

   The USAID Terms of Reference, or Scope of Work, are contained in Appendix F.

2. REFINERY SELECTION

The Bulgarian refining industry has only three operating refineries in the entire country. The Neftochim facility at Bourgas is easily the largest complex, has the most sophisticated processing capabilities, processes the most crude, and overall is the most important refinery in Bulgaria. Hence it was the logical choice for the Evaluation & Audit Study.

Following the explanation to the refinery management staff of the scope of work for this project, Neftochim had the following "wish list" of items for Davy McKee to evaluate:

1. Improved operation of the Crude Distillation Units.
2. Catalytic Reformer Unit improvement.
3. Diesel & Jet Fuel Hydrodesulfurization Unit evaluation.
4. FCC/Thermal Cracker/Vacuum Distillation Unit evaluation.

Due to the schedule constraints, Neftochim was informed that it would not be possible to perform an evaluation on all the process units listed above. Therefore, the specific units to be evaluated were mutually agreed upon were as follows:

Atmospheric Distillation # 5 (AD-5)

Atmospheric Distillation # 5	(AD-5)
Catalytic Reformer # 1	(CR-1)
Hydrodesulfurization # 3	(HDT-3) (Diesel)
Mild Hydrocracking/Fluid Catalytic Cracking	(MHC/FCC)

The above process units were selected for in-depth evaluations since they are most critical to the overall complex processing capabilities. They were in operation at the time of the evaluation (many of the other process units were shutdown due to a shortage of crude to the complex), and were in line with Neftochim's above "wish list".

3. SUMMARY OF FIELD ACTIVITIES

The Neftochim - Bourgas, Bulgaria refinery was visited 22 - 31 July 1991. The Davy McKee evaluation team consisted of the following:

P.D. Agrawal	Project Manager and Team Leader for Bulgaria
T. Dempsey	Instrument/Electrical Engineer
G. Hamilton	Mechanical Engineer
N. Adams	Evaluation Team Leader
R. Paul	Process Engineer
C. Best	Environmental Engineer (Part Time)

The team was accompanied by Dr. V. Zlatev and Ms. Pektova from the Ministry of Industry and Trade, Bulgaria.

Operating data was collected for the four process units noted in Section A.2. above. Particular attention was paid to the following topics:

a) Feedstocks and its variability
b) Product yields and specifications
c) Operating conditions
d) Mechanical conditions and ages of equipment
e) Utility consumptions
f) Effluent character and quantity
g) Changing environmental regulations

Approximately two days were spent accumulating data for each process unit. Field visits to the process units and control rooms were undertaken. The members of the evaluation team generally divided into groups collecting information in three distinct areas, namely:

1) Process and utility data
2) Equipment evaluation, operating and maintenance practices
3) Effluents and environmental data

The relatively short time period spent visiting and collecting the data for each unit did not allow for analysis of this information prior to our departure. The intent was to conduct refinery evaluation upon return to the home office.

The environmental site survey meetings were conducted 23 - 26 July 1991. Discussions were held in the central conference room, area supervisors' offices and visits to the units. Site visits were made to the water intake, boiler feed water system, wastewater treatment plant, oxidation lagoons and the oily sludge incinerator areas.

Information as to the various flow rates, standards, operating conditions and future plans were collected. No measurements of any parameters were taken.

4. REFINERY DESCRIPTION

The Neftochim complex is an enormous facility consisting of a Power Generation Plant, Utilities Generation Units, Refinery Process Units, Petrochemical Complex, feed and product loading facilities, and other ancillaries associated with a complex of this type. The refinery process units constitute only a fractional portion of this complex. Table A.4.1 lists major refinery units.

TABLE A.4.1 - REFINERY UNITS

Designation	Initial Design Capacity (tonnes/year)	Year Built
Atmospheric Distillation		
AD-1	1 500 000	1963
AD-2	1 500 000	1963
AD-3	3 000 000	1969
AD-4	3 000 000	1973
AD-5	3 000 000	1974
Vacuum Distillation		
VD-1	1 680 000	1974
VD-2	2 000 000	1982
Catalytic Reforming		
CR-1	300 000	1964
CR-2	300 000	1970
Hydrotreating		
HDT-1 (Kero/Jet Fuel)	300 000	1964
HDT-2 (Diesel)	500 000	1970
HDT-3 (Diesel)	600 000	1975
HDS / FCC Unit	1 500 000	1982
Thermal Cracking (Visbreaker)	1 500 000	1982
H_2SO_4 Alkylation	215 000	1983
Gas Separation Unit	280 000	1983
MTBE Unit	80 000	1988

All of the above process units were licensed, designed, and built by sources in the USSR with the exception of the MTBE Unit, which was licensed by Huels (Germany) and built by sources in Bulgaria.

The nameplate capacity of the complex is 11 million tonnes/year. The plant has, through some minor debottlenecking revamps, the overall processing capacity of 14 million tonnes / year of crude. Crude feedstock is received by ship at Drouzba (near Bourgas). No crude is received from a pipeline source. The crude types normally processed in the past were as follows:

Soviet Export Blend	60%
Iraqi	20%
Miscellaneous	20%

Recent political problems in both the Soviet Union and Iraq have made it difficult for Neftochim to obtain sufficient crude supplies to efficiently operate the process units. This complex, up to the time of the evaluation, had operated at roughly 33% of rated capacity during 1991. It is expected that Neftochim will have even greater difficulty securing a stable crude supply in the future.

At the time of the evaluation, the refinery complex was operating significantly below its capacity due to severe difficulties in obtaining sufficient crude supplies. Several of the process units were shut down and others were operating at significant turndown ratios. The latest overall material balance information available for the Bourgas refinery was for the entire year 1990, and is presented in Table A.4.2.

Crude oil distillation

The refinery complex contains five Atmospheric Distillation Units commissioned between 1963 and 1973. Recent operations (the past 1½ years) have utilized only the newest units (AD-4 and AD-5) since insufficient crude supplies have been obtained to justify operation of the other units. Additionally , AD-4 and AD-5 have been operated at significant turndown ratios at various times. Initial indications are that the Atmospheric Distillation Unit fractionation is very poor. Substantial amounts of lighter, more valuable products appear to be dropped into the heavier product fractions.

The complex also operates two Vacuum Distillation Units (one is associated with the Visbreaking Unit). The energy efficiency of the Vacuum Distillation operation was not investigated.

TABLE A.4.2. - OVERALL MATERIAL BALANCE (1990)

STREAM	TONNES/YEAR	WT%
INPUTS		
Crude Oil	7 355 000	99.45
Methanol	41 000	0.55
Subtotal	7 396 000	100.00
OUTPUTS		
Gas	15 000	0.20
LPG	77 000	1.04
Virgin Naphtha	834 000	11.28
Automotive Gasolines	1 126 000	15.22
Jet Fuel	203 000	2.74
Motor Diesel Fuel	1 658 000	22.42
Industrial Diesel Fuel	803 000	10.86
Fuel Oil	2 434 000	32.92
Marine Oil	75 000	1.01
Liquid Paraffins	24 000	0.32
Bitumen	128 000	1.73
Sulfur	14 000	0.19
Losses *	5 000	0.07
Subtotal	7 396 000	100.00

* Normal losses are reported to be around 1.0%.

Light ends processing

Light ends produced in the various refinery process units are collected in the Gas Separation Unit. From there, they are distributed to the Alkylation, MTBE, Isomerization, Hydrogen Production and Sulfur Recovery Units within the refinery, and to the Petrochemical Complex.

Naphtha processing

Neftochim utilizes two old Naphtha Hydrotreating / Reforming Units in processing the majority of the naphtha recovered from the crude fractionation. The naphtha hydrotreaters are older, inefficient units that compromise the operation of the downstream Reforming Units. Significant breakthrough of reforming catalyst poisons occur resulting lower efficiency reforming operations. Since the light/heavy naphtha fractionation in the upstream Atmospheric Distillation Units is rather poor, carryover of material that should be sent directly to the gasoline blending pool is processed through the Reforming Units. The Reforming Units produce a relatively low octane product (92 RONC) since higher unleaded octane product is not required in Bulgaria at this time. The lower than typical product octane is also governed by the design temperature limitations of the Reforming Unit's heaters and reactors. Only one of the Naphtha Hydrotreating / Reforming Units has been operated in the recent past since the crude supply shortage has limited naphtha production to these units.

Neftochim has Light Naphtha Isomerization Unit on the premises that was shutdown at the time of the evaluation. No explanation was obtained as to the reason for the idling of this unit.

Distillate processing

There is one Kerosene / Jet Fuel Hydrotreating Unit in the complex. There are two Diesel Hydrotreating Units that appear to have been operated on a campaign basis in the recent past (one unit in operation at any one time) since there has not been adequate diesel supply available to justify the operation of both units.

Resid processing

The most important process unit within the refinery section of the complex appears to be the FCC Unit. It is by far the largest gasoline producer. A Visbreaking Unit is operated to convert resid material as well. The heaviest material is processed in the Bitumen Unit to produce an asphaltic material. Neftochim will need additional bottoms processing capabilities in the future to remain competitive with other refineries.

Hydrogen production unit

A single Hydrogen Production Unit is operated to produce and purify hydrogen for the other process units in the complex.

Sulfur recovery unit

Sulfur is recovered in a Claus-type Sulfur Unit.

5. TYPES OF ENERGY IMPROVEMENT OPPORTUNITIES

There are several potential energy improvement opportunities at Neftochim. They are broken down into three categories:

- Immediate / Minimum Cost
- Medium Term / Intermediate Capital
- Long Term / Significant Capital

A listing of major opportunities in each of the above categories is presented below:

Immediate / minimum cost opportunities

Neftochim must develop and implement a comprehensive energy conservation program. Currently, a full slate of refinery products are produced with little regard for the energy consumed in the process. It is apparent that energy efficiency is not now, nor has it been a high priority issue in this refinery.

- Invest in education programs or courses for following topics:

  a) Overall fired heater operations, with specific focus on proper burner operation and maintenance.
  b) Steam trap selection and maintenance.
  c) Vessel and other process equipment recertification.
  d) Engineering / Operations process design.
  e) Refinery and operations energy efficiency.

- Invest in the following low cost evaluation equipment:

  a) Portable combustion analyzer.
  b) Infra-red thermal analyzer gun.
  c) Corrosion meter (about 3000 US $).
  d) Thickness gauging system (audiogram, sonogram).
  e) FCC unit flue gas CO on-line analyzer.

- Invest in computer software as follows:

  a) Simulation program for crude / vacuum distillation operations and other refinery units.
  b) LP Model for profit analysis based on new feedstocks and resulting product slate.
  c) PC based programs for:

     i) Maintenance / turnaround planning
     ii) Spare parts / warehousing inventory

- Evaluate the overall complex utility balances and utility system capabilities. Consider replacement of large electric motor drivers with steam turbines.

- Evaluate new and improved catalysts for various process units that may provide yield and energy efficiency improvements.

Medium term / intermediate cost opportunities

The overall fired heater operations and efficiencies must be improved. This can be done by evaluating and implementing one or all of the following options:

1. Repair and/or optimize operations of the Air Preheaters.
2. Add / utilize automatic control of combustion air.
3. Replace obsolete and worn burners with modern high efficiency burners.
4. Consider installation of Convection Section heat recovery systems for:

   i) Steam generation
   ii) Process fractionator reboiling
   iii) Process stream preheating
   iv) Hot Oil Circulating System

5. Commission some or all of the following studies all intended to improve the energy efficiency, operability, and/or product yields of the refinery :

   a) Installation of additional pumparounds on the crude distillation towers.
   b) Installation of vacuum fractionator structured packing and liquid ring vacuum pumps.
   c) Increasing the MEA concentration in the Gas Desulfurization Unit.

   d) FCC Unit efficiency improvements.
      i) Installation of Power Recovery System.
      ii) Installation of 'Catalyst Cooler'.
      iii) Installation of new 'Lift Gas' modification.
      iv) Installation of new high efficiency feed distributor.

   e) Installation of Advanced Control Instrumentation.
   f) Modification / revamp of existing Catalytic Reforming Unit(s) equipment (reactors, fired heater tubes, piping, etc.) for suitability to higher temperature (>1 000 °F) operations for increased gasoline octane capabilities.
   g) Conversion of existing Reformer(s) to Isomerization Unit(s).

h) Incorporation of the following resid processing options:

i) Burn resid in boilers (for steam generation) and desulfurize flue gas.
ii) Consider partial oxidation (steam & electricity generation).
iii) Consider resid conversion processes:

* New FCC style RCC conversion process
** New Hydrocracking Unit
*** Coker

6. Install gas blanketing / secondary sealing systems on tankage.

7. Provide variable cooling capabilities for air fin coolers by installation of variable speed or adjustable blade pitch equipment.

8. Convert Catalytic Reformer CR-2 reactors to radial flow types.

9. Repair / upgrade cooling tower facilities.

Long term / significant cost opportunities

Below is a listing of long term, significant capital investment (greater than $5 000 000) opportunities for greater energy efficiency or operational improvements:

- Install a new Continuous Catalyst Regeneration Catalytic Reforming Unit in place of the existing Reforming Units.

- Install reliable centrifugal recycle compressors when retirement of existing reciprocating machines becomes necessary.

- Repair FCC Unit Waste Heat / CO Boiler.

- Revamp FCC Unit reactor system to reduce catalyst contact time for improved yields.

- Install recycle gas compressor on the Naphtha Hydrotreating Unit upstream of Catalytic Reformer CR-2 for improved Reformer operations.

- Install suitable above ground storage tankage to provide reasonable working capabilities, particularly for crude feedstock, but also for refined products where adequate capacity is not currently available.

- Implement projects for reformulation of gasoline in future.

- Implement projects to manufacture diesel fuels with reduced sulfur and aromatics content.

6. TYPES OF ENVIRONMENTAL EMISSIONS IMPROVEMENTS

Immediate opportunities

The immediate opportunities for emission reduction are:

a. Education programs to minimize the loss of oil to the sewer
b. Closer control of the combustion in the process heater and boiler.

A successful education program should reduce the oil loss by 25%. A semiautomatic combustion control could, with frequent monitoring with hand held analyzers, reduce the CO and NO_x emissions by 10 to 15%.

Medium term opportunities

The following medium term reduction opportunities will reduce the environmental impact.

a. Install automatic combustion control on all of the process heaters.
b. Completely upgrade the oil separators.
c. Repair the inoperative Dissolved Air Floatation (DAF) Units.
d. Repair the clarifier units.
e. Replace the aeration unit gear boxes.
f. Establish continuous operation of the rotary kiln incinerator.
g. Remove the accumulated oil/sludge from the repaired DAF and clarifier units.
h. Remove the floating oily substance from aeration lagoon #7.
i. Install floating aerators in aeration lagoon #'s 3 and 4.

Long term reduction

The following long term changes would reduce the environmental impact.

a. Remove the sulfur in the fuels to the process heaters and power plant boilers.
b. Install low NO_x burners in the heaters and boilers.
c. Install storage tank vapor recovery for all storage tanks.
d. Cover the modified API oil/water separators.
e. Cover the repaired DAF clarifier units.

Future projects

The following environmental improvement programs should be undertaken.

a. Establish a program of emission inventory from each process block.

   1. air
   2. water
   3. solid waste

b. Initiate a ground water survey at the old aeration lagoon and the refinery site.

c. Establish a meteorological station and at least three air monitoring stations.

B. REFINERY ENERGY BALANCE

1. OPERATING UNIT ENERGY USE

The Neftochim energy balance and the utility utilization system is described below:

1) Electricity is generated in a Central Power Station.

2) Steam for the entire complex is generated in the same Central Power Station. There is no process unit steam generation (e.g. in fired heater convection sections) with the exception of the FCC Unit Waste Heat Boiler (CO Boiler was not in operation at the time of the evaluation).

3) Motor drivers are utilized exclusively throughout the refinery. There are no steam turbine drivers in the process units within the refinery. A comprehensive study/analysis of the most efficient use of selected steam turbine units within the refinery is recommended.

4) In general, the fired heaters in the refinery are designed to fire both fuel gas and fuel oil using combination burners. The heaters are operated to preferentially fire the fuel gas, with fuel oil utilized to make up the shortfall.

5) Neftochim is looking for improved or additional facilities to upgrade their bottom-of-the-barrel processing capabilities. Given the current processing capabilities, the plant produces far more residual material than desired. The only current use is to turn this heavy fuel oil-type material into an asphaltic product in their Bitumen Unit. Unfortunately, there is currently little market for this material, and the price structure is such that this becomes an uneconomical operation.

6) Air coolers are used for the majority of the cooling/condensing services, especially on the Atmospheric Distillation and Vacuum Distillation Units. These air coolers do not have variable cooling capabilities (via variable speed or adjustable blade pitch), hence require more energy than necessary during certain times of the year. This comment also applies to the reduced throughput operations as have been conducted over the past 1½ years.

Questions arose regarding the completeness and accuracy of data relating to producing an energy balance of the refinery. Because of this and the limited schedule for the field visits to the refinery, it became impractical to produce a complete refinery energy balance. However, the need to do this still exists.

Although Neftochim apparently collects all utilities consumption information on a unit by unit basis, we received the complete utility consumption breakdowns for only the four process units that were evaluated. Even the accuracy of this utility consumption information is questionable as it does not appear to reasonably

compare to similar process unit utilities consumptions in established Western refineries. As stated above, within the limited time constraints and the inconsistent utility information provided by the refiner, it was not possible to do a complete refinery energy balance.

A tabulation of Neftochim's Specific Energy Demands for the four process units evaluated in detail is presented in Table B.1.1. This table also compares the Neftochim major utility consumptions vs. published 'typical' U.S. refinery operations.

TABLE B.1.1 - ENERGY EFFICIENCY COMPARISON
NEFTOCHIM REFINERY OPERATIONS (3) VS. PUBLISHED TYPICAL US OPERATIONS

Unit	Fuel Fired (kcal/tonne)		Steam (kg/tonne)		Electricity (kWh/tonne)		Cooling Water (m^3/tonne)	
	Neft	US	Neft	US	Neft	US	Neft	US
AD-5 Atmospheric Distillation	173 739	129 457	42.2	23.1	9.2	2.0	1.0 (4)	17.5
CR-1 Catalytic Reforming	441 336 (1)	759 784	26.0	154.0	45.8	28.2	23.4	23.5
HTU-3 Diesel Hydrotreating	152 248 (1)	147 369	11.9	53.1	19.1	10.0	1.8 (4)	9.5
HDS/FCC Complex	199 044 (1)	569 996 (2)	32.9	100.8 (2)	69.7	54.5 (2)	10.2	38.9 (2)

Unit	Total Energy Demand (kcal/tonne)		Neftochim Total Energy Demand of % US
	Neft	US	
AD-5 Atmospheric Distillation	225 959	160 952	140.4
CR-1 Catalytic Reforming	583 642	949 556	61.5
HTU-3 Diesel Hydrotreating	207 443	214 311	96.8
FCC MHC/FCC Complex	395 606	794 768 (2)	49.8

1. Fuel fired information provided by Neftochim (for fuel gas) appears inordinately low (refer to Section B.1, item 3 of 5).

2. Published specific energy demands for Gas Oil Hydrotreater/FCC Units combined.

3. AD-5, CR-1, HTU-3 calculated averages for actual 1989 and 1990 and projected 1991 energy demands. FCC calculated for 1988 operation only.

4. These figures are low and may be due to major reliance on air cooling.

1) As noted in the table's footnotes, the Neftochim specific energy demands for the Atmospheric Distillation, Catalytic Reforming, and Diesel Hydrotreating Units were averaged over a three year period: actual 1989 & 1990 and projected 1991. The FCC Unit specific energy demands were calculated for 1988 - the only year yields and utility consumptions were available.

2) Neftochim's FCC Unit yields and energy demands included the Mild Hydrocracking (and Hydrotreating) Unit operation. The specific energy demands were therefore compared to published Gas Oil Hydrotreating and FCC Units combined.

3) Fuel gas is fired in the Catalytic Reforming, Diesel Hydrotreating, and FCC Unit furnaces; fuel oil is fired in the Atmospheric Distillation Unit. The fuel gas consumptions, converted to Fuel Oil Equivalents [FOE] by Neftochim, appear to be unrealistically low compared to typical U.S. refinery operations. From our preliminary observations, it was apparent that the fired heater operations were rather inefficient (poor flame characteristics, wide open burner registers, inoperable air preheater sections, no stack gas analysis or overall heater efficiency calculations). Additionally, the process units were operated at significant turndown rates during the evaluation period, which also contributed to the less than optimal efficiencies. Importantly, for a refinery process unit, the fuel fired consumption is by far the largest energy consumer, typically 70 - 85 % of the total. Uncertainties and inaccuracies in the fuel fired data will therefore render the Specific Total Energy Demand comparison meaningless for CR-1, HDT-3, and the FCC/MHC Unit.

4) As stated above, the Atmospheric Distillation Unit fires fuel oil in the furnaces. The fuel oil consumption reported appears to be reasonable. Based upon reported information, the Neftochim Atmospheric Distillation Unit has operated at over a 40% greater energy consumption than a typical U.S. refinery unit. This is not an unexpected conclusion, based upon observations and severe operating turndown rates.

5) It is not unreasonable, to believe that the other process units in the refinery complex could also be operated at 20 - 50 % greater utilities consumptions compared to typical U.S. operations, for the following reasons:

   a) The CR-1 furnace air preheater was inoperable and bypassed. There is no convection section heat recovery capability.
   b) The HDT-3 furnaces are old style all-radiant Soviet designs with no convection sections.
   c) The FCC Unit was operating without the flue gas Waste Heat Boiler.
   d) All process units were operated at high turndown during certain times of the evaluation period.

2. FUEL SYSTEM

2.1. Fuel Sources

Fuel gas and fuel oil are used exclusively throughout the refinery. No coal or nuclear power is utilized. The fuel gas consists of an approximate 50 / 50 mixture of refinery gases (produced in the various process units and concentrated in the Gas Separation Unit) and imported natural gas. The fuel gas characteristic data is presented in Table B.2.1.

TABLE B.2.1 - FUEL GAS DATA

COMPOSITION (Volume %)	SOURCE		
	Refinery	Imported Natural Gas	Mixture
H_2S			
H_2O			
CO			
CO_2		0.02	
O_2			
N_2		1.01	
H_2	37.5		19.0
CH_4	31.9	98.51	73.8
C_2H_4			
C_2H_6	15.3	0.28	2.6
C_3H_6	0.5		1.2
C_3H_8	8.2	0.13	1.3
C_4H_8	4.0		1.2
i-C_4H_{10}	0.8	0.02	0.3
n-C_4H_{10}	1.7	0.03	0.6
Mercaptans (mg/nm^3)			16.0
TOTAL	100.00	100.00	100.00

Fuel oil is a blend of residual materials collected from the various "bottoms" processing units. The fuel oil characteristics are presented in Table B.2.2.

TABLE B.2.2. - FUEL OIL DATA

TYPE	HEAVY FUEL OIL
Viscosity at 80°C, mm^2/sec	115 / 15 °E
Flash Point, °C	110
Pour Point, °C	25
Sulfur, wt% Low Sulfur High Sulfur	1.0 3.5
Ash, wt%	0.11

2.2. Fuel Distribution

The refinery and imported natural gases are blended in a fuel gas balance drum and distributed throughout the refinery fuel system. The residual fuel oils produced by the various bottoms processing units are presumably blended in tankage. This was not verified.

2.3. Fuel Users

Fuel gas and fuel oil are utilized throughout the refinery in the various fired heaters. It appears that fuel oil is preferentially fired to completely use the resid materials produced in the bottoms processing units as there is little demand or incentive to further process this material through the Bitumen Unit. The objective, therefore, is to use the bottoms produced in the refinery and minimize the import of natural gas from outside.

3. STEAM SYSTEM

3.1 Steam Generation

Steam for the Neftochim refinery is produced in a central power station where electricity is also generated. The only other steam production would be at the

FCC Unit Waste Heat Boiler. This system was shutdown during the time of the evaluation and apparently had been shutdown for some time.

The power station is owned and operated by Neftochim. There are a total of eleven Soviet designed and built boilers: five producing 100 atm (1 470 psi), steam and rated 140 tonnes/h (5 140 lb/min) each, and six producing 140 atm (2 058 psi), steam and rated 320 tonnes/h (11 760 lb/min).

The summer load is about one-half the winter load. Desuperheating is done for emergencies only. All the boiler feedwater pumps are electric drive, five for the 100 atm system and six for the 140 atm system. Neftochim supplies 10 atm steam to a sugar plant and some other adjacent plants. All the condensate from these plants is returned. A maximum of 20% of the condensate is returned in a condition good enough to be deaerated, polished and reused as boiler feedwater. Depending on the expected degree of contamination, a large portion of the rest of the condensate is sent to cooling tower feed or the process sewer.

A steam balance was not undertaken during the limited time of the refinery evaluation. Only 20% of the steam condensate is returned to the system. The remainder is rejected to the Waste Water Treatment System. The reason for returning only 20% of the condensate to the steam system should be investigated.

3.2 Steam Levels

Steam generated in the Central Power Station is exported to the refinery and petrochemical plant at the following conditions:

140 bar g for electric power generation only
100 bar g for electric power generation only
40 bar g @ 450 °C
20 bar g @ 350 °C
15 bar g @ 320 °C
10 bar g @ 280 °C

Steam is also let down at the process units to 1.5 and 0.6 bar g.

3.3 Steam Users

There is very limited steam usage in the Neftochim refinery. Steam appears to be used only in process applications (e.g. stripping steam) and as the atomizing medium for the fuel oil in the fired heaters. There is very limited use of steam tracing throughout the refinery.

Neftochim does not utilize steam turbine drivers. This is in direct contrast to typical Western refinery operating practices, particularly for critical services. Improved energy efficiency and process operability could be obtained by greater utilization of steam throughout the refinery complex.

4. ELECTRIC POWER SYSTEM

4.1 Electricity Sources / Generation

The output of the turbo-generators (mentioned in Section 3.1 above) normally is in the 120 MW to 140 MW range with the station consuming approximately 13% of the power produced. The power factor normally runs 0.86, this relative high figure is a result of a large number of over excited synchronous motors and capacitor banks.

The steam-side control room is compact, composed of Soviet built recorders and indicators and is basically operated in a manual mode. A graphic panel type curved control board occupies most of the control room. The electrical-side control room is also compact with a control board that is also a basic compact graphic panel with manually operated electrical-tripping switches. It is a Soviet design with Soviet built equipment.

The power station has substantial capacity redundancy even considering the derating of Turbines 2,5 and 6. While the instrumentation and electrical controls are adequate, they are obsolete and do not allow the station to be operated in an energy efficient manner. A Distributed Control System (DCS) is needed at the Power Station along with an Energy Management Control Program. However, since the Power Station operates on a cogeneration cycle, (less than 50 MW of condensing is available), the efficient production of electrical power is dependent upon the consumption of steam within the Neftochim Complex.

4.2 Electricity Distribution System

The system is depicted on drawings included in Appendix D.

Neftochim has a highly reliable and well designed electrical distribution system. The system has a high degree of redundancy with a fault limiting design. Some of the design features are:

- 110 kV direct grounded wye center.
- Reactors on all substation feeders.
- Active resistor grounding of the 6 kV system.
- Dual 110 kV busses in main substations and power station.
- Two section 6 kV busses in substations/MCCs
- Dual feeders to all substations/MCCs from the dual source main substations.

The 110 kV overhead cable feeder runs are under two kilometers in length, resulting in very low line losses (I^2R). The 6 kV feeders to the substations/MCCs are under one kilometer, also resulting in low I^2R losses. Motors 200 kW and over are powered at 6 kV. This holds I^2R losses in feeder cables to reasonable

levels. 1.25% (12 step) load-tap changers are used on all 110 kV/6 kV transformers supplying the substations/MCCs. Capacitor banks for power factor correction were distributed throughout the plant.

The mean voltage levels for power distribution in Neftochim are 115 kV, 6 kV, and 380 V. Neftochim is powered by two independent sources:

- Two 110 kV overhead power lines from the "Bourgas" substation which in turn is connected to the 400 kV state electric power grid.
- The plant thermal power station with six turbo generators.

Generators 1, 2, 3, and 4 supply 6 kV power (via GRU 1 and 2) to the process units adjacent to the power station and also to the plant 110 kV grid. Generators 5 and 6 have their 6 kV outputs directly transformed up to the 110 kV grid. Four 110 kV feeders (Lipa, Globus, Orbita and Pirin) leave the power station. Globus and Orbita go to the main substation GPP-2. At GPP-2, two feeders, Amur and Bacial come in from the "Bourgas" substation. Two 110 kV feeders leave the substation, Breza to GPP-4 and Rila to GDD-1. The two smaller main substations are fed as follows:

- The two incoming 110 kV feeders to GPP-1, are Rila from GPP-2 and Pirin from the power station.
- The two incoming 110 kV feeders to GPP-4, are Lipa from GPP-1 and Breza from the power station.

Also from GRU-1, GRU-2, GPP-1, GPP-2 and GPP-4, 6 kV power is distributed to the substations/MCCs. The 6.3 kV (6 kV) mean voltage is wye center grounded via an active resistor with a rated fault current of 150 amperes. All substation feeders have reactors to limit fault current.

Considering its capital costs, the high degree of redundancy in the electrical distribution system is surprising. However, as the cost of process unit emergency shutdowns can be extremely high, and the refinery does not have any steam turbine drives, or back-up turbine drives, it is likely that this redundancy was based on comparative economic alternate analysis.

In summary, Neftochim has an excellently designed and constructed electrical distribution system. The system has sufficiently high transmission voltages for the refinery's transmission distances to hold electrical distribution losses to reasonable low levels. Also, the electrical system has the necessary security, redundancy and reserve to maintain the level of power continuity needed for a refinery with 100% electrical drives. With the above in mind, along with a review of the system, no economical suggestions can be made to minimize further the electrical distribution losses.

A list of electrical distribution system symbols along with a description of their meaning can be found in Appendix D.

4.3 Electric Power Users

Motors 200 kW (268 hp) and over are powered at 6 kW. Motors under 200 kV are powered at 380 V. Normal refinery lighting is at 220 V. Emergency lighting is at 220 V DC and is supplied from a battery bank. Safety lighting is at 12, 24 and 36 V, 50 Hz and is supplied from 220 V step-down transformers. Instrumentation is also normally powered at 220 V, 50 Hz and at 220 V DC from storage batteries on emergency power. There are no emergency generators installed at Neftochim.

Power is furnished to the substation/MCCs at 6 kV from GRU-1, GRU-2, GPP-2 and GPP-3. All the 115 kV and 110 kV transformers are equipped with automatic load-type Vage regulators (12 x 1.25%). The substation buses are the two-section type. Normally both supply feeder breakers are closed and the bus-tie circuit breaker is open. Upon a feeder failure, the affected circuit breaker is opened and the tie-breaker closed. On failure of a bus, the bus-tie breaker does not close into the fault. The 380 V power is supplied from a 6.3 kV/380 V step down transformer. The transformers are delta-wye direct grounding of the wye center. Depending on the required supply of the units being served, the 380 V switch-gear bus may be single section or the two section type.

The switch-gear in the substation / MCCs is about 80% Soviet and 20% Bulgarian. The original substation / MCCs (Soviet built - 1963) are now badly worn and Neftochim is having difficulty obtaining spare parts to maintain them. It is now replacing one of them, substation 209, with a new substation containing Bulgarian equipment. The active power (MW), MVA demand and reactive power (MVAR) are metered at each substation / MCC inlet feeder. The 6 kV motor feeder cubicles contained the following equipment: over current relay, current transformers (CTs), MWh meter, current differential relay, under voltage relay, ammeter, oil breaker (rated 1 000 amp.) and running light. Except for the current differential relay the 6.3 kV/380 V transformer feeder cubicles contained the same equipment.

The 380 V switch-gear is mounted on open slate boards. Each 380 V motor starter has fuses for instantaneous protection, current overload relays for time protection, an undervoltage relay and a breaker. For motors 25 kV and larger, CTs are provided to power the ammeter (located by the motor) and provide a reasonable level of current to the overloads. The 380/220 V lighting feeders are provided with fuses and a breaker.

The substation / MCC also contains equipment to provide direct current for the fields of the synchronous motors whose switch-gear is in the MCC. To provide this DC power, some of the older substations use motor-generator sets, while in the newer ones, solid state rectifier banks are used. Other auxiliary equipment included a battery bank to provide power for operating the switch-gear, and another battery bank to provide 220 V DC for ernergency lighting.

Table B.4.1. shows the 1989 electrical usage of selected refinery units, based on a crude oil throughput of 12 million tonnes.

TABLE B.4.1. - 1989 ELECTRICAL USAGE
REFINERY CRUDE THROUGHPUT -12 000 000 TONNES

Process Unit	Installed Nameplate, kW	Consumed, kWh/h
AD-1	2 050	1 050
AD-2	2 200	1 350
AD-3	6 900	1 806
AD-4	7 068	2 980
AD-5	7 014	2 980
VD-1	1 774	1 152
VD-2	5 742	2 390
CR-1	6 286	2 086
CR-2	6 700	3 560
HDT-1	1 456	350
HDT-2	3 821	995
HDT-3	3 970	1 075
GSU	1 631	1 000
FCC	38 066	16 610
HU	5 369	1 560
TOTAL	100 047	40 944

AD - Atmospheric Distillation
CR - Catalytic Reformer
FCC - Fluid Catalytic Cracker
GSU - Gas Separation Unit
VD - Vacuum Distillation
HDT - Hydrotreater
HU - Hydrogen Unit

5. COOLING WATER SYSTEM

The cooling water system dedicated to the refinery, was designed to handle a volume of 10 000 cubic meters/per hour, with cooling water temperature over the battery of cooling towers designed to be lowered from 34 to 24 °C. Neftochim's staff is already aware of their cooling water problems and have identified and scoped a project to correct deteriorated physical conditions and the reduced capacities. At the time of inspection, the temperature difference across the battery was 4 °C which reflected the unbalancing due to the partial shutdown of the refinery and the construction effort aimed at replacing cooling tower wooden packing with polypropylene grids. Six oil separators in parallel preceded the cooling tower battery and there was ample evidence of unsatisfactory separation.

Although there were several cooling tower configurations in the refinery, all were mechanically drafted using Bulgarian-Soviet Fans. In at least one application, the fan was directly coupled and driven by a motor located inside the fan stack. The other applications employed the more standard extended drive shaft with gear box and motor located outside the stack. Two banks of towers which dated from the earliest construction of the refinery were abandoned. The only natural draft cooling towers are the three that are serving the Power Station.

The construction project scope of work included renovation of sprinkler systems, substitution of wood packing with polypropylene grids, new fans as required, a new bank of towers and coordinated pumping and piping changes. The management of the cooling water system stated that type of fans currently used were no longer available to them, but that they did have an interest in American products and cooling tower design.

6. AIR COOLERS

Air coolers appear to be preferentially installed over water coolers in cooling / condensing services, particularly on the Atmospheric and Vacuum Distillation Units. Unfortunately, the air coolers are installed in large bays (in some instances, only one fan per bay and one bay for the entire cooling service) without variable speed or adjustable blade pitch capabilities. Hence, there is no flexibility in adjusting either the heat removal from the system or the utility requirement to remove this heat. The air coolers are simply turned on and allowed to operate as they will. This is obviously not the optimum method of air cooler operation, and can contribute to fluctuations in process operations (depending in changes in climatic conditions) along with unnecessarily high utility consumptions.

It was concluded that the cooling water system had been operated in an inefficient and poorly maintained condition for some number of years. Further, a large part of the construction project was not approved (possibly for lack of funds), since it was not scheduled.

7. ENERGY RECOVERY SYSTEMS

The only energy recovery system noted during the evaluation study was the Waste Heat Boiler located in the FCC Unit. The unit was shutdown and had been for some time. Neftochim did not elaborate on the reason for the shutdown. There was no secondary heat recovery on any of the furnaces encountered during the evaluation (e.g., steam generation, hot oil circulation, process fractionator reboiling, etc.). Several of the furnaces were designed with air preheaters although these preheaters were either inefficiently operated or non-functional and bypassed.

C. REFINERY FLEXIBILITY

1. OVERVIEW

Feedstock selection and capacity

The original "nameplate" capacity of the five Atmospheric Distillation Units is 11.0 million tonnes/year. The current actual operating capacity is approximately 14.0 million tonnes/year achieved either through simply operating the units at higher-than-design throughput, or through minor debottlenecking modifications to the units. Recent actual projected crude processing is as follows:

Table C.1.1 Crude Throughput

Year	million tonnes/y Processed	% Actual Capacity
1989 (Actual)	12.0	85.7
1990 (Actual)	7.4	52.9
1991 (Projected)	5.0	35.7

The refinery management appears to be having an extremely difficult time obtaining sufficient crude to efficiently and effectively operate the complex. In the recent past, Neftochim has received approximately 80 - 90% of its total crude from two primary sources - the Soviet Union, and Iraq. Both have become unreliable suppliers. The Soviet Union would prefer to export its crude to Western countries (to obtain much needed hard currency) hence, it has limited its sales to Bulgaria. Iraqi crude has gone off the World Oil Market since its invasion of Kuwait. Additionally, the crudes that are being obtained are increasingly heavier, more sulfurous, and more difficult to process. The recent evolution of crude distillation product slate is shown below:

Table C.1.2 - CRUDE DISTILLATION PRODUCTS

Product	Design wt%	1989 (Actual) wt%	1990 (Actual) wt%	1991 (Projected) wt%
Light Gases	1.7	2.6	2.2	2.0
Naphtha	17.0	15.5	14.3	15.5
Kerosene	17.0	6.0	3.5	2.7
Gas Oils	18.5	30.2	29.4	27.1
Resid	44.8	45.1	49.3	50.6
Losses	1.0	0.6	1.3	2.1

From the above table, it is apparent that the current heavy crude cuts (gas oils + resid) are of significantly higher concentrations than the original design (77.7 vs. 63.3 wt%). The atmospheric resid concentration has also steadily increased. The conclusion from this information is that the increasing heavy crudes could cause bottlenecks in the lower portion of the atmospheric distillation towers and the downstream process units that handle the heavier fractions (Vacuum Distillation, Thermal Cracking, Diesel Hydrotreating, FCC, and Bitumen Units). The Sulfur Recovery Unit could likewise be affected. It is not unreasonable to expect that at significantly higher crude capacities the 'bottoms processing' sections of the refinery could become limiting.

A block flow diagram of the refinery is presented as Figure 1.

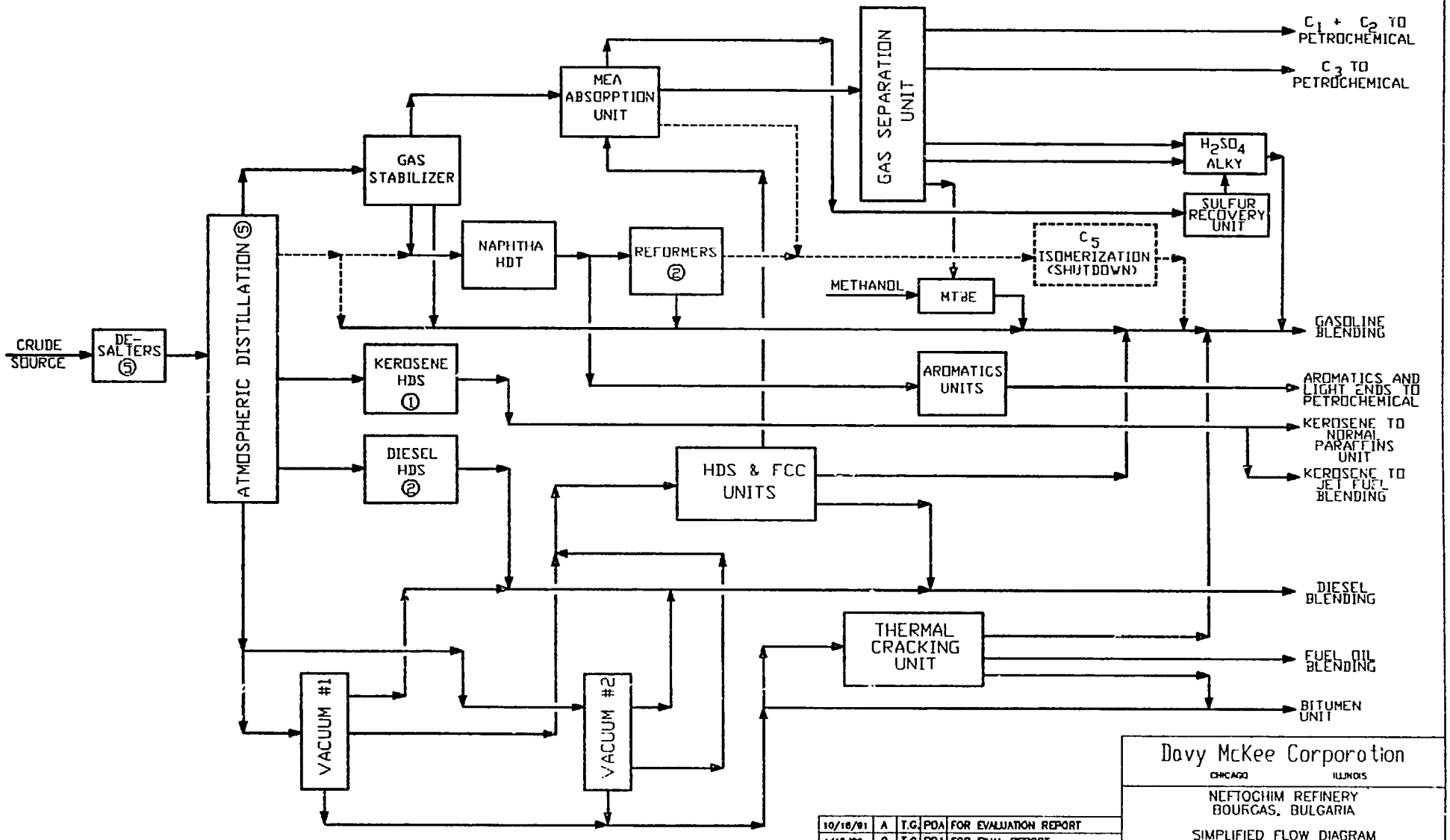

FIGURE 1

DATE	REV	BY	APPR	DESCRIPTION
10/16/91	A	T.G.	PDA	FOR EVALUATION REPORT
4/15/92	0	T.C	PDA	FOR FINAL REPORT

Davy McKee Corporation
CHICAGO ILLINOIS

NEFTOCHIM REFINERY
BOURGAS, BULGARIA

SIMPLIFIED FLOW DIAGRAM

DWG. No. 2063-11-01-101 | 0

2. ATMOSPHERIC DISTILLATION UNIT NO. 5

2.1 Process Flow Diagram

A simplified Process Flow Diagram is attached as Figure 2.

The Neftochim Refinery/Petrochemical Complex employs five Crude Atmospheric Distillation Units at the Bourgas site. The most recently designed and built unit (AD - 5) was selected for evaluation. This unit was processing the majority of total crude to the complex. AD - 5 consists of the following major vessels:

- Two Stage Desalters
- Preflash Column (note that the crude unit fired heater also serves as a reboiler for the preflash column)
- Atmospheric Distillation Column
- Kerosene Product Stripping Column
- Diesel Product Stripping Column
- Naphtha Stripper
- Naphtha Splitter (only AD-4 & AD-5 were designed with this column)

2.2 Feedstock

The feedstock to the complex has become progressively heavier and more sulfurous in recent years (as described in Section C.1 above). The only available breakdown of crude sources was for the year 1989. This is shown in Table C.2.1. This summary reflects the total crude processed by AD-4 and AD-5 combined. These two units processed approximately 50 percent each of the total crudes listed.

TABLE C.2.1 - 1989 PROCESSED CRUDE BREAKDOWN

SOURCE	TONNES	%
Soviet Export Blend	3 470 985	59.3
FAO Blend and Kirkuk - Iraq	1 549 280	26.5
Heavy Iranian	450 240	7.7
Brega and Es Sider - Libya	196 790	3.4
Soviet Atmospheric Resid	97 905	1.7
Souedieh - Syria	33 100	0.6
Zarzaitine - Algeria	27 400	0.5
Gulf of Suez - Egypt	17 300	0.3
Total Crude Processed	5 843 000	100.0

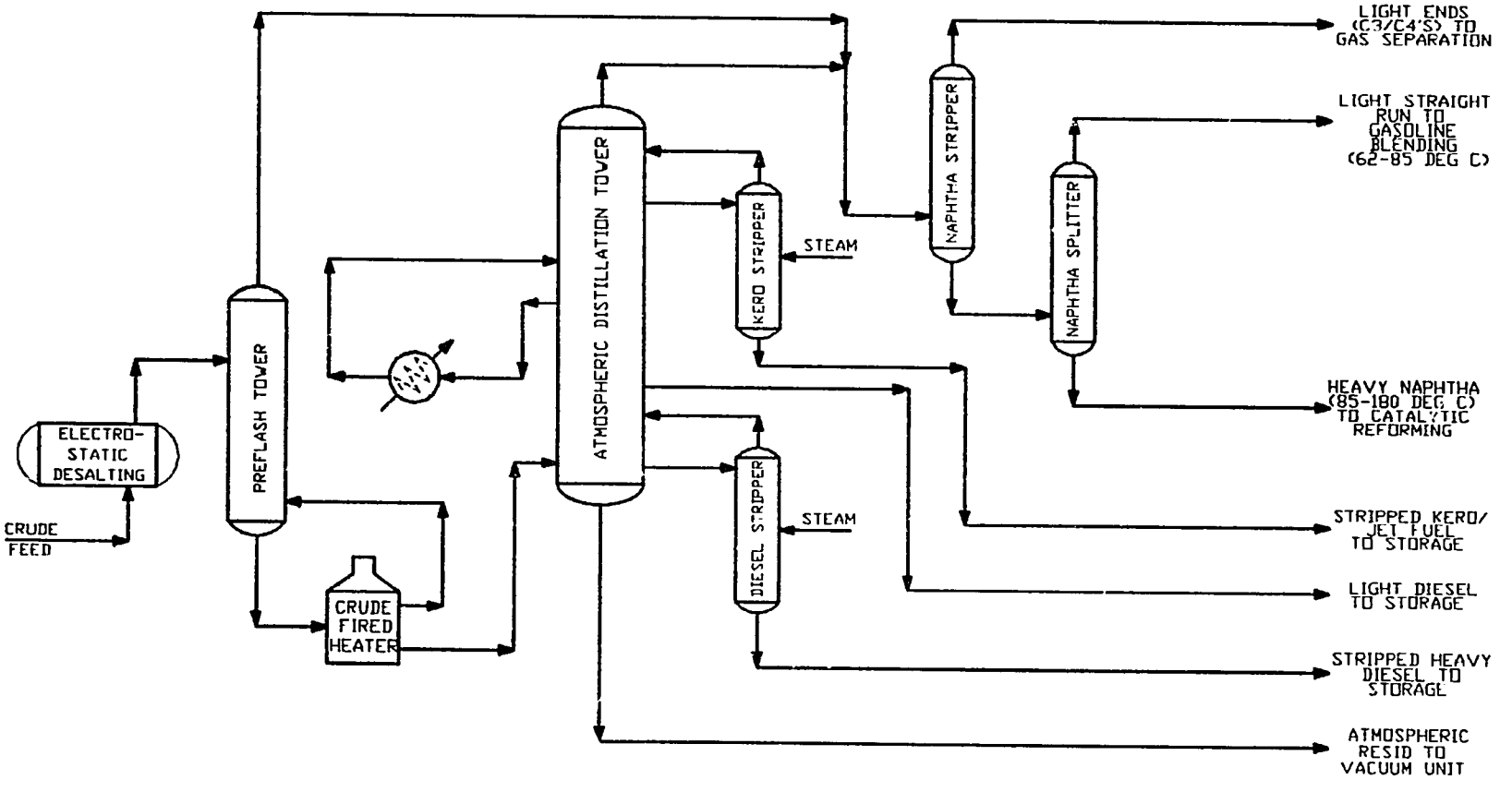

FIGURE 2

DATE	REV	BY	APPR	DESCRIPTION
10/18/91	A	T.G.	PDA	FOR EVALUATION REPORT
4/15/92	0	T.C	PDA	FOR FINAL REPORT

Davy McKee Corporation
CHICAGO ILLINOIS

NEFTOCHIM REFINERY
BOURGAS, BULGARIA

SIMPLIFIED PROCESS FLOW DIAGRAM
ATMOSPHERIC DISTILLATION UNIT AD-5

DWG. No. 2063-12-01-102 | 0

From the information in table C.2.1, the Soviet Export Blend and Iraqi crudes provided nearly 86 percent of the total crude processed in 1989. The Refinery advised us that the Soviet Export Blend contributes about 60% and Iraqi crudes about 20% to the total overall crude processed recently.

2.3 Unit Flexibility

The Soviet equipment design does not appear to provide for much flexibility. Multiple standard size shell and tube heat exchangers were used in services where fewer larger exchangers could be used (the AD-5 crude preheat system had 12 smaller exchangers per train - a total of 24 preheat exchangers). Air coolers also appear to be standardized. There is no variable pitch or variable speed to compensate for changing ambient temperatures from day to day or season to season. Additionally, there is generally only a large single bay for the air coolers, hence fans could not be selectively turned off to conserve energy or stabilize operations. Since the operation of the unit was significantly below the actual capacity, it was not possible to ascertain if alternate crude sources would cause any operating difficulties or bottlenecks.

2.4 Operational Sensitivity

Without getting any actual hard data, it is difficult to state that AD-5 would be any more sensitive than a typical crude unit. The Refinery staff commented, however, that the unit operation does fluctuate significantly. Part of the problem appears to relate to the lack of crude blending. Additionally, the supervisors and operators intimated that they were given no notice of crude (source) changes. The operation seems to be somewhat unplanned.

2.5 Product Specifications

The various atmospheric distillation unit products are tabulated in Table C.2.2. A comparison of the information provided by the AD-5 "Project Manager" is shown. It is apparent that the separation of the various product fractions is unusually sloppy. This has been confirmed by fractionation simulation results performed by DMC using input data provided by Neftochim. The IBP/EP overlap between products is significant. It appears as though Neftochim is dropping a significant portion of the more valuable light products (Naphtha & Jet Fuel/Kerosene) into the heavier products (Diesel, Gas Oils, & Resid). Assuming that the sketchy distillation data around the Atmospheric Distillation Column is correct, the fractionation is poor. A summary of "typical" vs. Neftochim distillation information is presented in Table C.2.2.

TABLE C.2.2 - ATMOSPHERIC DISTILLATION PRODUCTS

Product Distillation °C	Lt. Naphtha		Hvy. Naphtha		Kerosene		Diesel		
	Typ.	Neft.	Typ.	Neft.	Typ.	Neft.	Typ.	Neft. Lt.	Neft. Hvy.
IBP	37	28	105	60	171	135	253	187	189
5%	48		111		184		270	205*	234*
10%	50		113		188	167	279	223	279
50%	63		126		213	185	312	245	324
90%	88		148		244	212	360		
95%	97		154		251	229*	372	272	
FBP	107	168	162	180	257	239	375	296	360

* Estimated boiling points by interpolation.

From the above table, the following fractionation information should be noted:

Kerosene IBP / Naphtha FBP overlap:

Typical: Less than 2 °C
Neftochim: 45 °C

Kerosene 95 % Point / Diesel 5 % Point Gap:

Typical: More than +10°C
Neftochim: -24°C (overlap)

It is apparent that the fractionation in the Atmospheric Distillation Column has not been conducted to maximize the recovery of the more valuable distillate products.

2.6 Unit Yields

The product yields from the Atmospheric Distillation Unit are adversely affected by two factors:

a) The apparent poor fractionation of the crude.
b) The use of crudes that are heavier (and therefore more difficult to process) than the design crude or the crudes used even in 1989.

Both of the above factors contribute to the greater production of lower valued products.

2.7 Unit Modification Potential

There are several potential modifications that could be considered to improve operations. Prior to any unit revamp, serious consideration should be given to replacing one or more of the older Atmospheric Distillation Units. AD-5 is the newest of the Crude Units, and it is questionable as to whether significant capital expenses would be justified to bring the equipment and operation up to Western standards. With this in mind, the following revamp options could be considered:

1) The crude charge heater operations should be improved.

   - Improve the burner flame characteristics either by adjusting, repairing, or replacing the burners. The operators need instruction on how to efficiently fire a furnace.

   - Improve the air preheat section of the furnace. The operation is sloppy and apparently is not well monitored. The burner air registers are also wide open allowing significant ingress of cool (not preheated) air to the firebox with significant amounts of excess air.

   - Consider installation of heat recovery capabilities in the convection section of the charge heater (if the air preheat system is exceedingly expensive to modify or difficult to operate). The possibilities include feedstock preheating, fractionator reboiling, steam generation, or a Hot Oil circulation loop.

2) Provide variable cooling capacity (either variable speed or pitch) to the air coolers.

3) If the opportunity presents itself, replace the crude train multiple exchangers with a more efficient setup. This could be considered if any of the exchangers would be discarded.

4) Consider a complete inspection, evaluation and purchase of new trays (or possibly packing) to improve the Atmospheric Distillation column separation. If this is done then advanced controls to enhance the column product split should be considered.

5) Improve the fractionation in the Naphtha Splitter column by reboiling with the existing (but not operational) fired heaters. The naphtha splitting operation seem quite poor. Significant light material is dropped into the bottoms product which is further processed through the Catalytic Reforming Units. Processing of this additional material appears to be rather inefficient.

2.8 Capacity Increase Potential

The current operation of AD-5 is around 33% of actual capacity. At this turndown rate it would be difficult to predict capacity increase potential. A rigorous simulation of this current operation would confirm current and maximum capacity of this equipment in terms of crude heater duty, column tray loadings, pumparound rates, etc. The results of simulation can then be applied in determining the expansion potential.

2.9 Operating Practices

Operating practices around AD-5 appear to be poor at best. The following comments apply:

i) Operation of the fired heater would not be tolerated in any Western refinery. Flame characteristics were not at all consistent. Some flames were lazy, others were impinging on part of a tube bank. The air preheat system, although in service, was not properly operated. The dampers were set in a position and apparently were never moved from the setting. All the burner registers were wide open allowing ambient air into the firebox. The top two rows of burners were not being fired, but their air registers were also wide open. There were some large holes in the firebox allowing ingress of even more ambient air. The heater efficiency is not calculated. The operators have no idea how to properly operate the furnace. Simulation calculations indicate that the crude furnace is operating at near design duty, which is substantially higher than expected. The design duty is significantly higher than the normal duty, as the furnace should have been designed for start-up conditions. The higher than expected operating duty could be due, at least in part, to poor crude train heat exchange.

ii) The DMC simulation has predicted that Neftochim has been operating with a high degree of "overflash" - indicating a highly inefficient operation. The simulation calculated overflash is substantially higher than a typical design or operation. The results of simulation are included in Appendix C (APPF.2)

iii) As stated above in Section 2.6, the fractionation operation leaves a great deal to be desired. The Atmospheric Distillation Column separation is poor, but there is virtually no separation of the Light & Heavy Naphtha fractions in the Naphtha Splitter. The fired reboilers of both the Naphtha Stripper & Naphtha Splitter Columns are not in operation. Reboiling is done through a revamped scheme utilizing shell and tube heat exchangers. Recommissioning of the fired reboilers should be seriously considered.

iv) The basic problem with the operation appears to be that the operators have no direction nor any incentive to improve routine operations. As long as crude is processed and products are produced, the refinery staff appears content to allow the poor operation to continue.

2.10 Replacement / Shutdown Observations

Atmospheric Distillation Unit AD-5 is the newest of the five Crude Units at Neftochim. As such, it is probably the least likely to be shutdown and replaced. Although not visited or observed, it is expected that AD-1, 2, and 3 are more in need of replacement than AD-4 or AD-5 would be.

3. FLUID CATALYTIC CRACKING UNIT

The FCC Unit is one of the most important process operating units at the Bourgas refinery. It is the largest single producer of high octane gasoline in the complex. The unit was licensed, designed and constructed by a USSR engineering and construction organization, and commissioned in 1982. The importance of the FCC Unit to the overall process operations was reflected by the fact that although the unit underwent a maintenance turnaround about 1½ months prior to this evaluation, this turnaround was cut short and the unit was restarted prior to completion of scheduled maintenance work since it became "necessary" to restart.

Neftochim is currently considering a Reactor/Riser revamp of the FCC Unit to improve yields and increase throughput.

The FCC Unit information in this report necessarily contains some comments about the upstream Hydrotreating / Mild Hydrocracking Unit (MHC Unit) since some of the information provided to Davy McKee included combined MHC / FCC / Gas Concentration Unit data.

3.1. Process Flow Diagram

The 'FCC Complex' is subdivided into 5 separate sections as defined below :

100	Hydrodesulfurization Unit
200	FCC Reactor / Regenerator / Main Column
300	Product Separation & Stabilization (Gas Concentration Unit)
400	Waste Heat Boiler section
500	Final Catalyst Fines Removal (from Regeneration Flue Gas)

Simplified Process Flow Diagrams of Sections 100, 200, & 300 are attached as Figures 3, 4, and 5.

3.2. Feedstock

The vacuum gas oil (VGO) feedstock to the FCC Unit is first processed by the Mild Hydrocracking Unit. The MHC Unit operates at the following conditions:

Temperature: 350 - 520 °C
Pressure: 45 - 48 Bar g
LHSV: 1.0 h^{-1}
(LHSV is defined as Liquid Hourly Space Velocity)

The sulfur concentration across the MHC Unit is reduced from approximately 2.5 to less than 0.5 wt%.

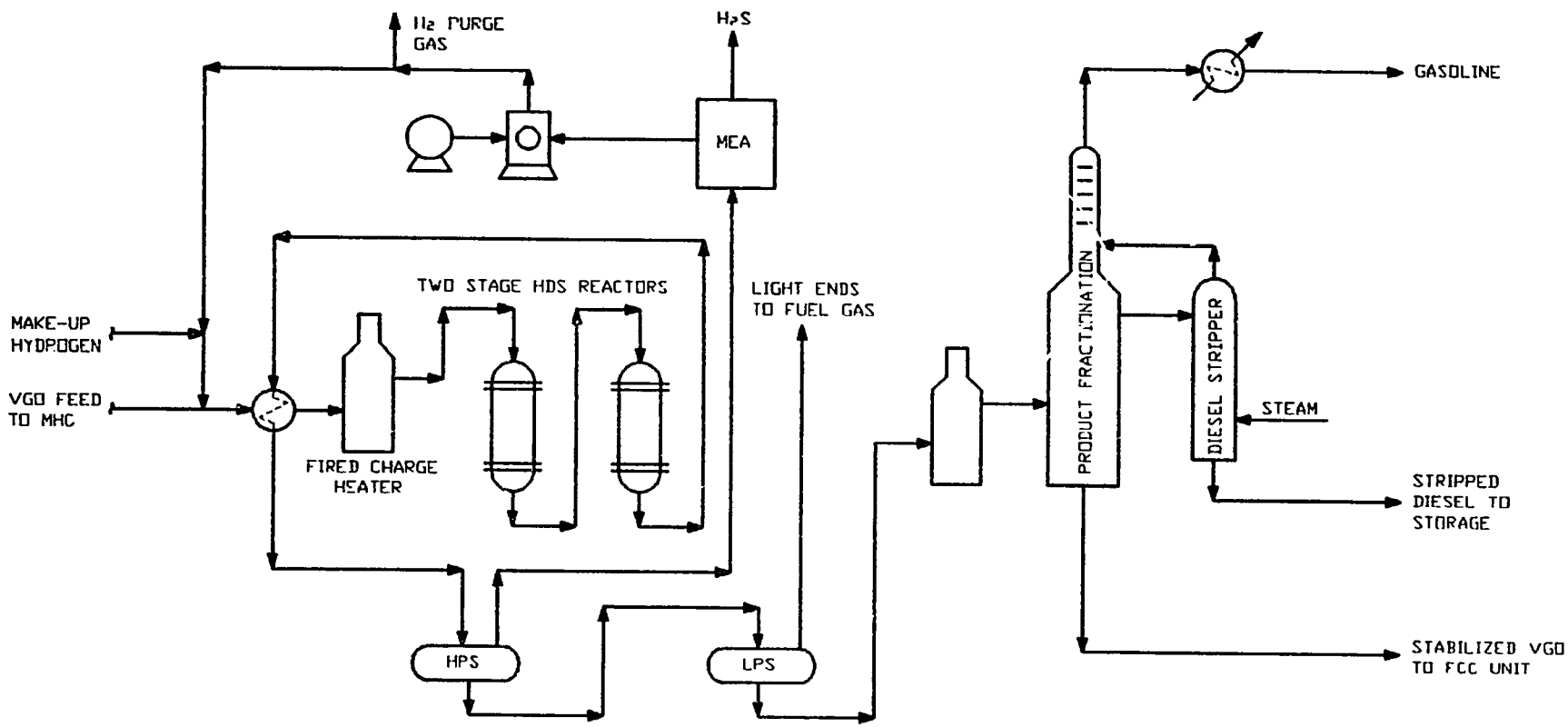

FIGURE 3

DATE	REV	BY	APPR	DESCRIPTION
10/18/91	A	T.G	PDA	FOR EVALUATION REPORT
4/15/92	0	T.C	PDA	FOR FINAL REPORT

Davy McKee Corporation
CHICAGO ILLINOIS

NEFTOCHIM REFINERY
BOURGAS, BULGARIA

SIMPLIFIED PROCESS FLOW DIAGRAM
(FCC FEED HYDRODESULFURIZATION)

DWG. No. 2063-12-01-103 | 0

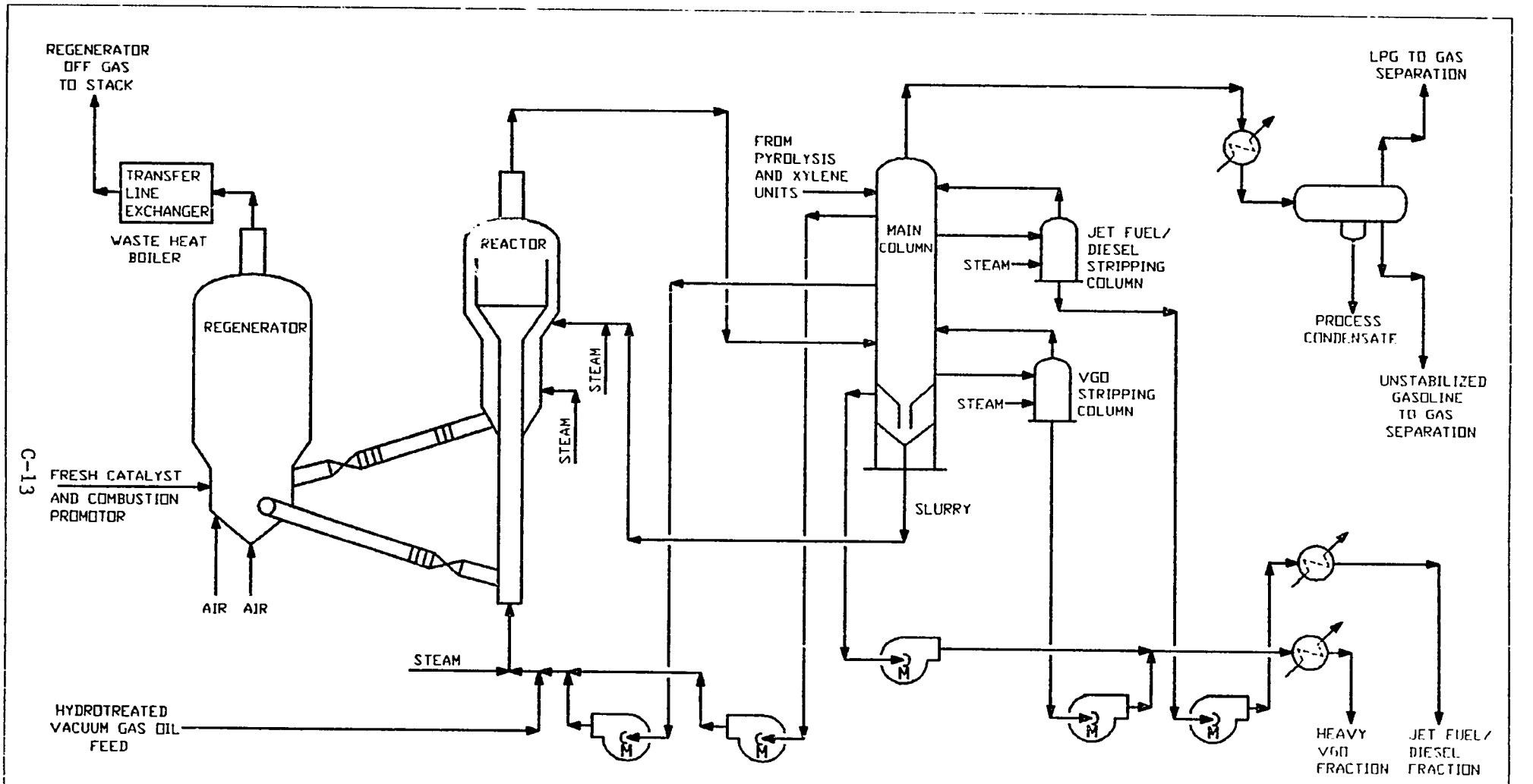

FIGURE 4

DATE	REV	BY	APPR	DESCRIPTION
10/18/91	A	T.C.	PDA	FOR EVALUATION REPORT
4/15/92	0	T.C.	PDA	FOR FINAL REPORT

Davy McKee Corporation
CHICAGO ILLINOIS

NEFTOCHIM REFINERY
BOURGAS, BULGARIA

SIMPLIFIED PROCESS FLOW DIAGRAM
FCC UNIT

DWG. No 2063-12-01-104 | 0

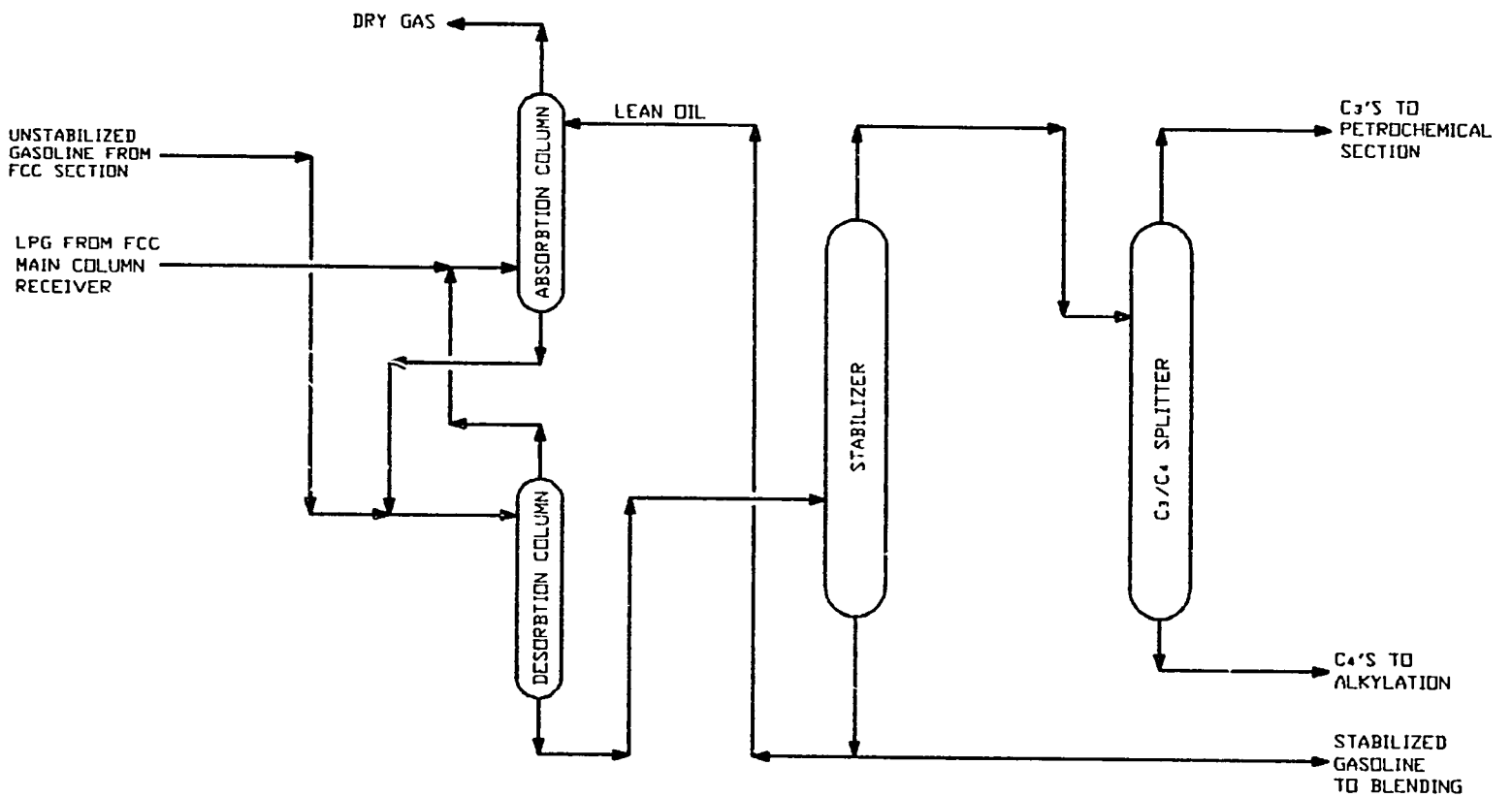

FIGURE 5

DATE	REV	BY	APPR	DESCRIPTION
10/18/91	A	T.G.	PDA	FOR EVALUATION REPORT
4/15/92	0	T.C	PDA	FOR FINAL REPORT

Davy McKee Corporation
CHICAGO ILLINOIS

NEFTOCHIM REFINERY
BOURGAS, BULGARIA

SIMPLIFIED PROCESS FLOW DIAGRAM
FCC GAS CONCENTRATION UNIT

DWG. No. 2063-12-01-105 | 0

During the time of the evaluation, the FCC Complex was operating at 60% of design capacity (design = 1.4 million tonnes/year VGO Feed).

Typical feedstock properties to the HDS and FCC Units are tabulated below :

TABLE C.3.1 - HDS AND FCC FEEDSTOCK PROPERTIES

PROPERTY	HDS Feed	FCC Feed
Density @ 20°C, kg/m^3	0.900 - 0.930	0.880 - 0.900
Sulfur, wt%	2.2 - 2.7	0.2 - 0.4
Total Nitrogen, wt%	0.13	< 0.10
Conradson Carbon, wt%	0.2 - 0.3	< 0.2
Distillation °C		
IBP	320 - 340	320 - 326
10%	365 - 385	380
50%	395 - 420	416 - 420
90%	480 - 490	480 - 490
FBP	505 - 515 (530 max)	510 - 520
Paraffins + Naphthenes, wt%	0.41 - 0.48	0.48 - 0.57
Aromatics, wt%	0.50 - 0.57	0.42 - 0.52
Resid, wt%	1.5 - 2.5	1.0 - 1.3
Metals, ppmw		
Vanadium	0.6 - 2.2	0.2 - 0.9
Nickel	0.2 - 0.7	0.1 - 0.3

3.3. Unit Flexibility

The FCC Unit design capacity is listed as 1.4 million tonnes/year VGO throughput. During the time of the evaluation, the unit was operating at 60% of design. The operators stated that in the past, the unit had been operated as low as 40% and as high as 111% of design capacities.

Neftochim stated that the HDS / FCC Unit bottlenecks were:

- The HDS Unit feed fired heater

- The FCC Unit wet gas compressor(s) - especially as the FCC catalyst deactivates, changing the hydrogen concentration and gas density.

3.4. Operational Sensitivity

A summary of the FCC Unit operating conditions is listed below:

TABLE C.3.2. - FCC UNIT OPERATING CONDITIONS

PROPERTY	NORMAL	RANGE
Reactor		
Temperatures °C	500 - 515	500 - 525
Quantity Equilibrium Catalyst, tonnes	180	
Fresh Catalyst Addition, tonnes/day	1.5	1.0 - 1.8
Feed Temperature @ Inlet °C	320	300 - 360
Steam Addition to Riser, tonnes/h	3.0	3.0 - 5.0
Stripping Steam Addition, tonnes/h		3.0 - 3.5
Current Contact Time, sec	~5.0	4.5 - 10.0
Contact Time (after Revamp), sec		1.5 - 3.0
Regenerator		
Dry Regenerator Air, m^3/h		95 000 - 110 000
Dense Phase Temperature, °C		660 - 680
Delta T, °C	10 - 15	5 - 30

3.5. Product Specifications

A listing of the product specifications for the overall refinery complex can be found in Appendix A.

The FCC Unit design gasoline product octane is 92.0 RON. Currently, Neftochim operates the Unit to produce 89.5 - 90.5 RON.

3.6. Unit Yields

The FCC Unit was designed to yield 38 wt% gasoline at 92.0 RON. The unit is currently operated to produce 52 - 54 wt% gasoline at 89.5 - 90.5 RON.

The following tables (C.3.3, 4, 5) summarizes the actual FCC complex material balance for 1988 (the best full capacity data available) and the estimated yields

following the proposed FCC reactors/riser revamp. This estimation also accounts for assumed feedstock changes (from 1988) to the complex.

TABLE C.3.3 - TOTAL HDS/FCC COMPLEX FEEDS AND PRODUCTS

	Actual 1988 tonnes/y	Wt%	Estimated tonnes/y	Wt%
TOTAL FEEDS TO HDS / FCC				
VGO Feed	1 479 471	94.68	1 570 000	92.73
Visbreaker Gasoline	52 118	3.34	90 000	5.32
Pyrolysis Gas + C_3s	16 326	1.04	16 000	0.95
Hydrogen Rich Gas	14 620	0.94	17 000	1.00
Total Feeds to Complex	1 562 535	100.00	1 693 000	100.00
PRODUCTS FROM GAS SEPARATION UNIT				
H_2 Product	1 930	0.12	7 850	0.46
H_2S	20 800	1.33	28 260	1.67
Dry Gas	37 243	2.38	35 651	2.11
Propanes, saturated and unsaturated	50 115	3.21	55 272	3.26
Butanes, saturated and unsaturated	105 103	6.73	117 456	6.94
Cracked Gasoline	703 624	45.05	756 945	44.72
Diesel from MHC	130 489	8.35	251 200	14.84
Diesel from FCC	215 188	13.77	208 658	12.32
Heavy Fuel Oil	199 442	12.76	138 184	8.16
Coke + Losses	98 601	6.31	93 524	5.52
Total Products from Complex	1562 535	100.00	1 693 000	100.00

TABLE C.3.4 - HDS UNIT FEEDS AND PRODUCTS

	Actual 1988 tonnes/y	Wt%	Estimated tonnes/y	Wt%
FEED TO HDS UNIT				
VGO Feed	1 479 471	99.02	1 570 000	98.93
Hydrogen	14 620	0.98	17 000	1.07
Total MHC Feeds	1 494 091	100.00	1 587 000	100.00
PRODUCTS FROM MHC UNIT				
H2 Product	1 930	0.13	7 850	0.49
H_2S	20 800	1.39	28 260	1.78
Hydrotreated Gasoline	10 835	0.73	47 100	2.97
Diesel Fraction	130 489	8.73	251 200	15.83
Stabilized VGO 'Product'	1 322 297	88.50	1 244 740	78.44
Losses	7 740	0.52	7 850	0.49
Total MHC Products	1 494 091	100.00	1 587 000	100.00

TABLE C.3.5 - FCC UNIT FEEDS AND PRODUCTS

	Actual 1988 tonnes/y	Wt%	Estimated tonnes/y	Wt%
FEED TO FCC UNIT				
Stabilized VGO	1 322 297	94.35	1 244 740	89.05
Visbreaker Gasoline	52 118	3.72	90 000	6.44
MHC Gasoline	10 835	0.77	47 100	3.37
Pyrolysis Gas + Xylenes	16 326	1.16	16 000	1.14
Total FCC Feeds	1 401 576	100.00	1 397 840	100.00
PRODUCTS FROM FCC UNIT				
Dry Gas	37 243	2.66	35 651	2.55
Propylene/Propane	50 115	3.58	55 272	3.95
Butylene/Butane	105 103	7.50	117 456	8.40
Cracked Gasoline	703 624	50.19	756 945	54.15
Cracked Diesel	215 188	15.35	208 658	14.93
Heavy Fuel Oil	199 442	14.23	138 184	9.89
Coke	72 286	5.16	69 092	4.94
Losses	18 575	1.33	16 582	1.19
Total FCC Products	1 401 576	100.00	1 397 840	100.00

The following points should be noted from the above table (after the revamp):

- The FCC Complex capacity will be increased 6%.
- The gasoline yield from the FCC Unit itself will have increased nearly 4 percentage points.
- The gasoline yield from the FCC Complex will have increased almost 53 000 tonnes/y.
- The diesel yield from the FCC Complex will have increased 33 percent or over 114 000 tonnes/y
- Correspondingly, the Heavy Fuel Oil + Coke yield will have been reduced over 23% or 64 000 tonnes/y.

The validity of these conclusions has to be confirmed by future operation.

3.7. Unit Modification Potential

Neftochim is considering reconstruction of the riser and reactor internals to reduce the catalyst contact time from about 5 seconds to about 1.5 seconds in effort to improve gasoline octane and yield.

There are also plans to install on-line analyzers to better monitor the operation of the FCC Unit.

Neftochim would like to install more efficient cyclones and a power recovery unit.

3.8. Capacity Increase Potential

An overall evaluation of the Neftochim refinery complex should be conducted to ascertain whether any revamp to increase the capacity of the FCC Unit is justifiable. The apparent bottlenecks to increased throughput through the FCC Complex were stated to be:

- The MHC Unit feed fired heater.
- The FCC Unit wet gas compressor.

3.9. Operating Practice

As stated in the Introduction of this section (Section 3.1) the FCC Unit operations are most important this refinery. The last turnaround was cut short because it became critical to restart this process unit.

At the time of the evaluation, the FCC Complex was operating at about 60% of design capacity. The Complex has been operated from 40 to 111% of design capacity.

Neftochim has operated the FCC Unit with the following catalysts in roughly this order:

1)	Super D	Grace
2)	Super D	Crossfield
3)	XL - 90	Crossfield (used extensively)
4)	Sigma Y	Katalystics
5)	XL - 90	Crossfield (again used extensively)
6)	Nova S	Grace (exhibited good performance)
7)	MAG - 350	Englehard
8)	Dynasieve + 850	Englehard (currently in use)
9)	Epsilon 442	UOP/Katalystics (next to be used)

The FCC Unit had been designed to make-up 1 100 tonnes of catalyst/year. Some post design improvements to the unit have reduced the make-up requirements to 350 - 400 tonnes/y catalyst.

3.10 Replacement / Shutdown Observations

The FCC Unit is the heart of this refinery complex. Although there are several revamp options as noted in this section, the FCC Unit should most definitely not be shutdown and replaced.

4. CATALYTIC REFORMING UNITS CR-1 & CR-2

4.1 Process Flow Diagram

Neftochim currently has two Catalytic Reformers on the Bourgas site. Both units are of Soviet design and license. CR-1 was commissioned in 1964, CR-2 in 1970. The original design capacity of each unit was 300 000 tonnes/y of naphtha feed. Both units were revamped in 1973 to increase the capacities to 400 000 tonnes/y each. Only CR-2 was in operation during our evaluation in Bourgas. CR-1 has been shutdown since November 1990. It had developed some exchanger problems, and since the refinery was processing significantly less crude than rated capacity, ample feedstock to both reformers was not available. In any case both units are over 20 years old.

Catalytic Reformers CR-1 & CR-2 are of nearly the same process flow configuration. There are some minor differences between the two units as highlighted below :

CR-1 has the following design configuration:

- Three radial flow reactors.
- Three column product fractionation design. This was revamped to a single stabilization column in 1973.
- Independent Stabilizer Column fired reboiler.
- Upstream Naphtha Hydrotreating Unit (NHT Unit) utilizes a recycle gas compressor for hydrogen gas circulation.

CR-2 has the following design configuration:

- Three downflow reactors (the final reactors operate in parallel as 'swing' reactors for periodic regeneration - hence four total reforming reactors).
- Two column product fractionation design. This was revamped to a single stabilization column in 1973.
- The current Stabilizer Column uses the Reactor Effluent stream with heat exchangers to reboil.
- Upstream NHT Unit operates with once-through hydrogen rich gas.

A simplified Process Flow Diagram is presented as Figure 6.

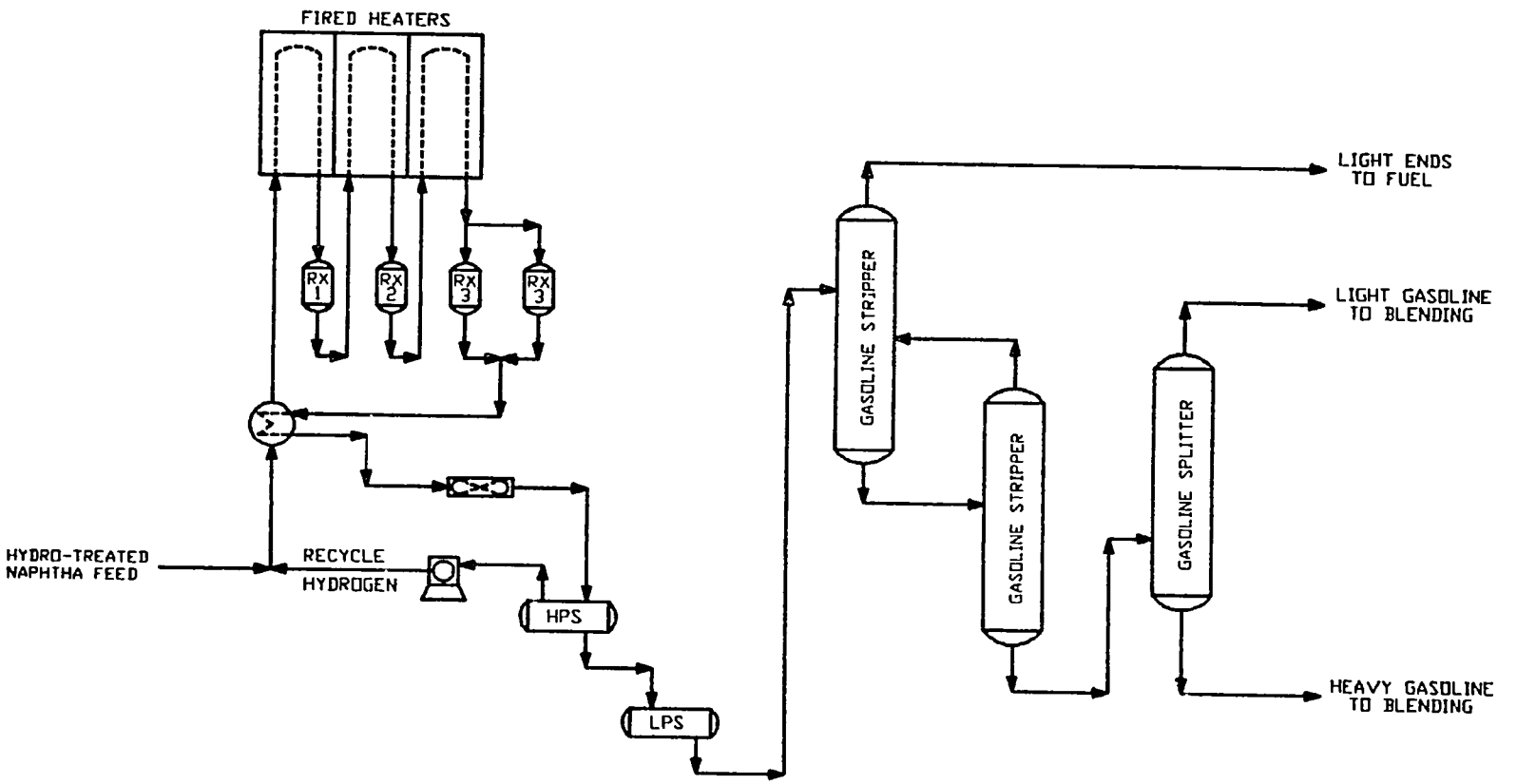

FIGURE 6

DATE	REV	BY	APPR	DESCRIPTION
10/18/91	A	T.G.	PDA	FOR EVALUATION REPORT
4/15/92	0	T.C	PDA	FOR FINAL REPORT

Davy McKee Corporation
CHICAGO ILLINOIS

NEFTOCHIM REFINERY
BOURGAS, BULGARIA

SIMPLIFIED PROCESS FLOW DIAGRAM
CATALYTIC REFORMING UNIT CR-2

DWG. No. 2063-12-01-106 | 0

4.2. Feedstock

Both of the Naphtha Hydrotreating (NHT) and Reforming Process Units receive their feedstocks from unblanketed storage tanks. This has led to excessive fouling of the exchangers upstream of the NHT Unit. The presence of oxygen is believed to promote polymerization and tar inert gas blanketing, nitrogen is normal practice, is recommended. During our evaluation in Bulgaria, CR-1 was shutdown (and had been since Nov. 1990) and CR-2 was operating at only about 37% of actual capacity.

The most important issue regarding the feedstock to the Reformers involves the process configuration of the upstream NHT Units. Since the NHT Unit upstream of CR-1 utilizes a recycle gas compressor, the feed to the Reforming Unit CR-1 is of significantly better quality than that to CR-2. The NHT Unit upstream of CR-2 utilizes only once-through hydrogen and provides a poorer feed pretreatment to the Reformer CR-2. We were informed of sulfur breakthrough (up to several ppm) resulting in catalyst poisoning, to the CR-2 reforming reactors, particularly when processing naphtha from higher sulfur crudes (Heavy Iranian & Syrian).

As discussed in previous sections on the Atmospheric Distillation units, the naphtha fractionation is poor in the Naphtha Splitter Column(s). Hence substantial quantities of Light Straight Run material that could be sent directly to the Gasoline Pool have been processed through the Reforming Units.

4.3. Unit Flexibility

The flexibility of the Reforming Units is severely limited by the following constraints :

- The NHT Units & Reforming Units are tied together by the compression requirements of the Reforming Units. To clarify, the Reforming Units were not designed with separate Net Gas Compressors. Hence, the operating pressures of the Reforming Units cannot be reduced to optimize reforming reactions since an adequate pressure must be maintained to feed the NHT Units with a hydrogen-rich gas stream. This is particularly true of CR-2, where once-through hydrogen is utilized by the Naphtha Hydrotreating operation.

- The design of the furnaces limits the reactor inlet operating temperatures to 520°C. This is substantially below today's current temperature requirements to produce high octane reformate.

- The relatively poor performance of the upstream Naphtha Hydrotreating Units (especially upstream of CR-2) limits the choices of catalysts that can be utilized in the reactors. Catalysts that are less sensitive to feedstock impurities (but with poorer performance characteristics) must be used in both Reforming Units.

- CR-1 has tied the fractionation section reboiling to the reactor section via reactor effluent heat exchange. This appears to limit Reforming Unit flexibility.

On the positive side, CR-2 was designed with parallel final reactors (Reactor No. 3). This will extend the catalyst operating cycle between regeneration for the entire system as the final reactors may be regenerated part way into the catalyst cycle.

Typical reactor operating conditions for CR-2 were represented as follows:

	Reactor 1	Reactor 2	Reactor 3
SOR Inlet, °C	495	497	500
Mid Inlet, °C	504	506	508
EOR Inlet, °C	516	518	520

(SOR is Start of Run)
(EOR is End of Run)

Final reactor outlet pressures were represented as:

CR-1	25-27	Bar g
CR-2	30	Bar g

On the whole, the Soviet designs of 20 years ago included little operating flexibility.

4.4 Operational Sensitivity

The Catalytic Reforming Units at Bourgas are less sensitive relative to 'Western' standards. This is predominantly due to the relatively poor operation of the upstream Naphtha Hydrotreating Units. The NHT Units, operating with Soviet chrome-moly catalysts, allow significant levels of contaminant (sulfur, nitrogen, etc.) breakthrough. As noted previously, processing of the naphtha from high sulfur crudes has caused difficulties in the NHT operations. Neftochim must use reforming catalysts that are less sensitive to feedstock contamination, albeit at inferior performance. Catalysts of this type are typically less sensitive to operational variabilities than the high performance reforming catalysts.

The normal operating cycle (between catalyst regeneration) for CR-1 is about one year; for CR-2 it is approximately 6-8 months. The relatively short cycle considering the mild octane requirements (92.6 RON avg.) is due to the inefficiency of the Naphtha Hydrotreating Unit operations. Neftochim only regenerates the reforming catalyst 5-6 times before the catalyst is "spent". This seems inordinately low. The catalyst may be permanently deactivated by contaminants other than sulfur (a temporary deactivating agent). Permanent catalyst poisons (e.g.metals) should be removed by effective NHT Unit operations but could be breaking through to poison the reforming catalyst. Currently, Neftochim utilizes Englehard E-603 reforming catalyst. They were using Englehard E-301 catalyst previously.

4.5. Product Specifications

The various gasoline product specifications are defined in Appendix A. The reformers operated such that the averaged product octane achieved in 1989 was as follows:

RON (Clear)	92.58
RON + .15 g lead / kg	95.42
RON + .40 g lead / kg	98.11

The reforming units cannot currently achieve the desired octane/operating requirements (RON approaching 100). Neftochim is investigating incorporation of a new Continuous Catalyst Regeneration Reforming Unit to help meet its future gasoline pool octane requirements.

4.6. Unit Yields

Yields for the actual reforming operations of CR-1 in 1989, CR-1 & CR-2 in 1990, and projected operations for CR-2 in 1991 are listed below in Table C.4.1. The 1991 forecasts are based on processing 5.0 mm tonnes/y of Soviet Export Blend crude to the Atmospheric Distillation Units.

TABLE C.4.1. - CATALYTIC REFORMING YIELDS

STREAM	TONNES/Y			
	1989 CR-1	1990 CR-1	1990 CR-2	1991 CR-2
Naphtha Feed	394 931	258 442	182 134	148 396
Hydrogen	28 063	18 757	12 829	10 536
Light Gases	20 729	14 614	8 999	15 879
C_3/C_4 LPG	17 100	3 716	5 909	4 897
C_5 Reformate	16 409	-	12 802	-
C_6+ Reformate	309 452	219 155	139 958	115 749
Losses	3178	2 200	1 637	1 335
Total	394 931	258 442	182 134	148 396
Total Reformate Yield, wt%	82.5	84.8	83.9	78.0

The product octane as shown above in Section 4.5. averaged 92.58 RON during 1989. It is assumed that similar octanes were produced in 1990 and 1991. This appears to be a rather mild reforming operation by today's standards, and is reflected by the relatively high reformate product yields.

4.7. Unit Modification Potential

There are several Reforming Unit modification possibilities. All modifications or revamps should be considered recognizing the overall age of the process units and the mechanical condition of all equipment. Additionally, if new reforming capacity is contemplated, salvaging the outdated units should not be considered. The following could be considered:

- Blanket storage tankage to minimize exchanger fouling.
- Improve fired heater overall efficiency:

  i) Make any necessary burner / air adjustments (replacement of burners may be necessary).
  ii) Repair air preheat system in CR-2, as it is currently inoperable.
  iii) Improve convection section heat recovery:

    a) Generate Steam
    b) Reboil fractionation columns
    c) Possibly incorporate a circulating Hot Oil System

- Improve compressor operations:

  i) Specify centrifugal recycle gas compressors for improved operations and maintenance considerations.

  ii) Separate Recycle and Net Gas Compressor operations:

    a) A single compressor severely limits operational flexibility (reforming operations are dictated by conditions in the NHT Unit).
    b) Single compressor operations result in significantly higher utilities (total gas must be compressed to Naphtha Hydrotreating Unit operating pressure requirements).

  iii) Add Recycle Gas Compressor to Naphtha Hydrotreating Unit associated with CR-2.

- Revamp CR-2 downflow reactors to radial flow configuration.
- Upon failure or retirement of multiple feed/effluent exchangers (five exchangers in series), install new vertical combined feed/effluent exchanger for improved efficiency (both improved heat recovery and reduced pressure drop).

4.8. Capacity Increase Potential

Considering the ages of the reforming units (CR-1: 27 years old; CR-2: 21 years old) and the apparent condition of the equipment, it does not appear reasonable to expend anything but minimum amounts of capital to revamp these units. Improved Atmospheric Distillation Unit fractionation would reduce the Light Straight Run material processed through the reformers (the LSR gasoline should be sent directly to the gasoline blending pool) and would allow some additional increase in heavy naphtha processing capabilities of the reformers. Additional expenditures for increasing processing capacities do not appear to be justifiable.

It is possible however, to convert these reformers to isomerization process units.

4.9. Operating Practices

Operating practices were poor within the Catalytic Reforming Units. The heater operations were most in need of improvement. The air preheater for the furnace of CR-2 was inoperable, and had been for some time. There was no indication that the preheater would be repaired in the near future. Design furnace overall efficiencies were reported at 76%. The project manager of the unit estimated that the actual efficiency was closer to 65%. This was purely a guess, and it is suspected that the overall efficiency is considerably lower than this 65%. Poor flame characteristics, wide open burner registers on non-operating burners, no ability to monitor the oxygen content of the exiting flue gas, and no heat recovery in the convection section of the furnace lead to the above conclusion.

The operators of the unit were very reluctant to allow the evaluators to visit CR-2 (CR-1 was shutdown during our visit). Apparently a high head pump had recently self-destructed and had made the operators leery of walking around this process unit. They also seemed to be embarrassed to conduct tours around the compressors. The compressors were in various states of repair (only one operating reciprocating compressor was intact - the two others were partially disassembled).

The two Reforming Units appear to operate on a campaign basis. The low crude throughput of the upstream Crude Distillation Unit results in substantially lower naphtha feedstock than could be processed. Operation of both reformers cannot be justified at this time. CR-1 will likely be restarted when significant operating or mechanical problems force the shutdown of CR-2.

4.10 Replacement / Shutdown Observations

Both of the Reforming Units are old and out of date. They are not capable of producing the high octane gasoline components that will be required in the future. There should be a high priority on the replacement of both of the Reforming Units. Neftochim apparently is actively considering the purchase and construction of a new Continuous Catalytic Regeneration Reforming Unit. This is absolutely necessary to become competitive with other European refineries in the future.

5. DISTILLATE HYDROTREATING UNIT NO. 3

5.1. Process Flow Diagram

Neftochim utilizes three Distillate Hydrotreating Units (HDTs) at the Bourgas refinery site as listed below:

TABLE C.5.1 - HYDROTREATING UNITS

DESIGNATION	FEEDSTOCK	COMMISSIONED	DESIGN CAPACITY (TONNES/Y)
HDT - 1	Jet Fuel	1963	300 000
HDT - 2	Diesel	1970	700 000
HDT - 3	Diesel	1975	600 000

At the time of this evaluation, HDT-3 was in catalyst regeneration operations in preparation for a maintenance turnaround. HDT-2 was in operation desulfurizing the diesel fuel.

Current diesel fuel product sulfur concentrations from either HDT-2 or HDT-3 are 0.15 - 0.25 wt.%. Neftochim is considering replacement of the existing Diesel Hydrotreating Units with a new installation such that diesel product sulfur concentrations of <0.05 wt% can be achieved.

The reactor configurations of the three Distillate Hydrotreating Units is listed below :

HDT - 1	2 reactors in series
HDT - 2	3 stage reactor system
HDT - 3	Single stage reactor.

HDT-2 utilizes two exchangers to reboil the Stripping Column. HDT-3 utilizes a dedicated fired heater to reboil the Stripping Column. A simplified Process Flow Diagram of HDT-3 is attached as Figure 7.

61

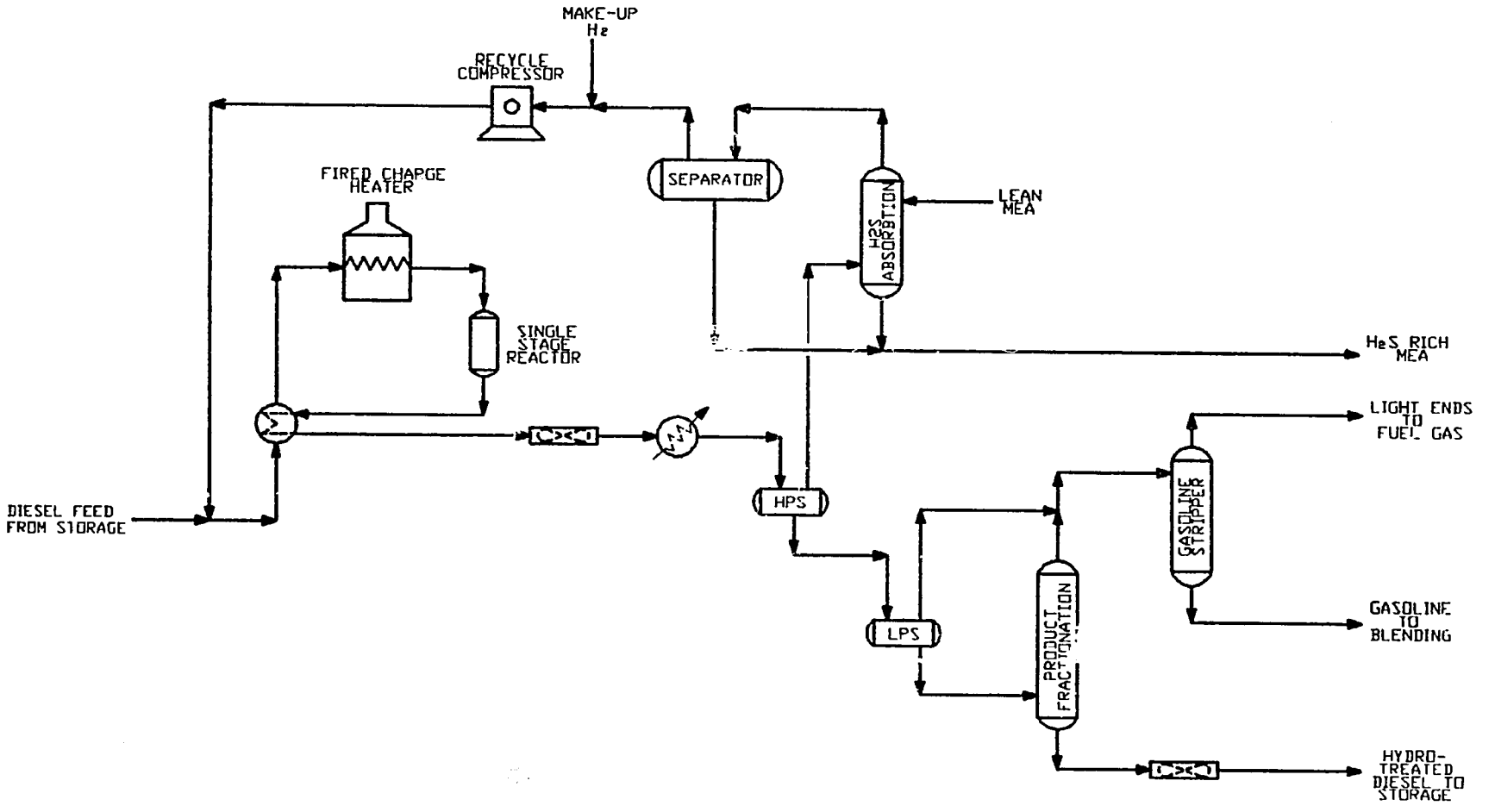

FIGURE 7

DATE	REV	BY	APPR	DESCRIPTION
10/18/91	A	T.G.	PDA	FOR E[illegible]TION REPORT
4/15/92	0	T.C	PDA	FOR FINA[illegible] REPORT

Davy McKee Corporation
CHICAGO ILLINOIS

NEFTOCHIM REFINERY
BOURGAS, BULGARIA

SIMPLIFIED PROCESS FLOW DIAGRAM
DIESEL HYDROTREATING UNIT HDS-3

DWG. No. 2063-12-01-107 | 0

5.2. Feedstock

The design feedstock properties to HDT-3 are as follows in Table C.5.2:

TABLE C.5.2 HDT-3 DESIGN FEEDSTOCK PROPERTIES

PROPERTY	VALUE
S.G. @ 20 °C	0.850 - 0.865
Distillation, °C	
IBP	200 - 280
10%	260 - 280
50%	310 - 325
90%	360 - 380
EP	380 - 400
Viscosity @ 20 °C, mm^2/sec	9.5 - 12.5
Sulfur, wt%	1.0 - 1.39

As stated in previous sections of this evaluation, Neftochim is operating with significantly heavier and more sulfurous crudes than the refinery complex design. Hence there is greater difficulty in the bottoms processing and sulfur removal steps. At the time of the evaluation, the Distillate Hydrotreater was processing a Heavy Iranian diesel cut that contained 1.5 - 2.0 wt% sulfur. The resulting product contained approx. 0.20 - 0.25 wt% sulfur, significantly higher than the 0.17 wt% target. Note that the current feedstock sulfur concentration is nearly 50 percent higher than the design values.

Hydrogen-rich gas to the Hydrotreating Units is imported from two primary sources: reforming units at >70 vol% purity, or the Cracking Plant (located in the petrochemical section of the complex) at >95 vol% hydrogen purity. Circulating gas/oil ratios of 400 Nm3/m3 were represented.

5.3. Unit Flexibility

Distillate Hydrotreaters HDT-1 and HDT-3 are located adjacent to one another. Three recycle gas compressors are available for the two separate services (a common spare compressor can be utilized for either service). Considering the

mechanical maintenance requirements of the reciprocating type compressors, the spare compressor affords a significant degree of flexibility.

HDT-2 was designed with the Stripper Column reboiler integrated into the reactor section flow scheme which appears to limit operational flexibility. HDT-3 utilizes a separate fired reboiler for this service.

5.4. Operational Sensitivity

Operational sensitivity of the Neftochim Hydrotreating Units does not appear to be different than other units of this type. The higher sulfur diesel feedstock is causing some product specification problems, but this is not unexpected.

Neftochim indicated that HDT-2 and HDT-3 operated on a catalyst process cycle of approximately 1 year (requirement between regeneration). Unfortunately, they are regularly forced to shutdown these units prematurely due to excessive reactor pressure drop developed over the course of the run. This could be attributable to both catalyst "packing" and the formation of tar-like compounds emanating from the unblanketed feed storage tankage.

5.5. Product Specifications

Current Bulgarian diesel fuel specifications are attached in Appendix A. Neftochim operates their Complex to produce a diesel fuel of less than 0.3 wt% sulfur. HDT-3 is designed for 90% desulfurization of the feedstock. The operators adjust hydrotreater operating conditions to achieve product sulfur concentrations of 0.17 wt%. The 1989 average product sulfur was 0.164 wt%. As stated previously, when processing diesel cuts from the higher sulfur crudes (e.g. Heavy Iranian), the product sulfur concentration averages 0.20 - 0.25 wt%. This severely limits the ability of Neftochim to route untreated Diesel or Gas Oil cuts from the Atmospheric Distillation Units directly to the Diesel Pool.

5.6. Unit Yields

Material balances for actual operations of HDT-3 in 1989 & 1990, and the projected operations for 1991 are listed below in Table C.5.3. DMC was given a 1991 projection assuming Atmospheric Distillation Units processing 9.2 x 10^6 tonnes/y of Soviet Export Blend crude. For all other process units in the Complex, projections were based upon processing 5.0 x 10^6 tonnes/y of this crude. The 1991 HDT-3 projections have been scaled down accordingly.

TABLE C.5.3 - HDT-3 MATERIAL BALANCE

TONNES/Y	1989 ACTUAL	1990 ACTUAL	1991 PROJECTED 9.2 BASIS	1991 PROJECTED 5.0 BASIS
FEEDSTOCKS				
Diesel Feed	615 987	390 550	600 159	326 173
Make-up Hydrogen	17 448	9 436	12 000	6 522
Total	633 435	399 986	612 159	332 695
PRODUCTS				
Distillate Product	600 983	379 912	585 152	318 017
Heavy Naphtha	7 269	7 975	6 002	3 262
Off Gases	16 012	5 913	9 002	4 892
H_2S	3 667	2 749	4 801	2 609
Losses	5 504	3 437	7 202	3 915
Total	633 435	399 986	612 159	332 695

Distillate product yields for the three year operating period (actual + projected) averaged 95.1%. The distillate product plus heavy naphtha yield averaged 96.4%.

5.7. Unit Modification Potential

As with the revamp discussion of other process units, an in-depth evaluation of the process equipment should be undertaken to determine if any process modifications to HDT-3 are justifiable. Possibilities include:

- Revamp or replace the old all-radiant Soviet designed fired heaters. Although calculations were not done on the furnaces, it is evident that new or revamped furnaces will operate at significantly higher overall efficiencies than currently practiced.
- Replace the existing reciprocating-type recycle gas compressors with more reliable centrifugal types.

5.8. Capacity Increase Potential

Since only one of the two existing Diesel Hydrotreaters is operated at any one time, the equipment is nearing 20 years old, and Neftochim appears to have difficulties obtaining sufficient crudes to operate the Complex at design capacities, it is difficult to envisage justification of capital expenditures to increase the operating capacity of Distillate Hydrotreating Unit HDT-3. However, if crude supply becomes stable in the future, there will be a definite potential to increase the capacity of these units.

5.9. Operating Practices

The two Diesel Hydrotreating Units (HDT-2 & HDT-3) have recently operated on a campaign basis (one unit at a time) since Neftochim has had difficulty obtaining sufficient crude to operate both units simultaneously. At the time of the evaluation, HDT-2 was only operating at 40% of design throughput.

Operators and supervisors both stated on several occasions that they have encountered excessive maintenance requirements for all the reciprocating-type compressors around the complex. This comment is relevant to the Diesel Hydrotreaters also. All the Distillate Hydrotreating Units require recycle gas compressors (as opposed to once-through operation).

Currently Neftochim employs the following Soviet catalysts in their diesel hydrotreating reactors:

HDT-2	Reactor 1	Cobalt - Molybdenum
	Reactor 2	Nickel - Molybdenum
	Reactor 3	Nickel - Molybdenum
HDT-3	Single Reactor	Nickel - Molybdenum

The range of Diesel Hydrotreating Unit reactor operating conditions is:

Temperature: 380 - 420 °C
Pressure: 35 - 45 atm g

Following the regeneration of catalyst in HDT-3, an Akzo hydrotreating catalyst will be loaded and utilized. The expected operating temperature range was represented as 320 - 340 °C.

Neftochim stated that the steam-air catalyst regeneration procedure resulted in excessive environmental pollution.

As stated previously, the Distillate Hydrotreating Units are routinely shutdown prior to end of run catalyst process conditions due to excessively high pressure drop developed in the reactors during the course of the run. This appears to be caused by the formation of tar-like compounds in the unblanketed feedstock tankage.

The Distillate Hydrotreating Units appear to be basically operable. Their effectiveness in removing diesel fuel contaminants and operational flexibility are somewhat limited as noted by the problems listed above.

5.10. Replacement / Shutdown Observations

Distillate Hydrotreating Unit HDT-3 operates reasonably well considering the higher than design sulfur content of the feedstock. This process unit is important to the production of on specification diesel fuel. There is no need to replace or shutdown this unit in the immediate future.

6. PLANT LIMITATIONS

6.1. Unit Capacities

During the time of the evaluation the refinery complex was operating substantially below its capacity. Accordingly, it would be difficult to predict which process units would limit the overall plant capacity since none of the process units have been 'pushed' in the recent past. It has been noted that the feedstock to the complex has become progressively heavier and more sulfurous. It is expected that the residual processing units would limit the overall plant capacity.

6.2. Product Requirements

More stringent product specification requirements will probably limit the overall plant operations in the near future. The two Reforming Units were designed to operate at temperatures substantially below today's standards, hence these units do not have the ability to produce the high octane gasoline required on modern Reforming Units.

The Distillate Hydrotreating Units are processing a feedstock with significantly higher sulfur than the original design anticipated. It is possible that these desulfurizing units could limit the throughput to the complex as more stringent diesel product specifications appear to be on the horizon.

6.3. Fuel System

Although an in-depth investigation of the fuel system(s) was not undertaken during the evaluation of this refinery, it is expected that the fuel gas system would not limit the refinery operation. Since the current philosophy is to use the residual materials from various process units as fuel oil, and since the Neftochim Complex appears to be limited in the amount of bottoms material that it can process and convert to lighter more valuable products, the fuel oil produced in this complex could limit overall refinery processing capabilities.

6.4. Steam System

The steam system of this complex would not appear to limit the overall plant operations in any way. Steam is used only in process applications (e.g., stripping steam) and as the atomizing medium for fuel oil in the fired heaters in the units that were evaluated. There seems to be adequate steam production capabilities (since steam is generated to produce electricity) to satisfy the above demands.

6.5. Electric Power System

Considering the excellent design and its high degree of redundancy, the electric power system should not be a limiting factor for any debottlenecking on the units, replacement of existing units with larger units or new units.

At the present time, the power stations electrical power output is limited by the Neftochim Complex's steam usage since it is a cogeneration plant. The plant distribution system is designed for a much higher electrical load than the plant has used to date.

6.6. Tankage

A complete evaluation of the tankage situation of this complex was not undertaken. However, based upon environmental concerns and potential remediation requirements (as currently practiced in Western locales), the underground tanks for crude oil storage should be removed and the refinery would need a crude oil storage (above ground) capacity adequate to achieve stable blending of various crude oils supplied to the refinery.

6.7. Other Limitations

The major limitation to the throughput to this refinery complex would appear to be the procurement of an adequate supply of crude oil. This is a political (not technical) limitation.

D. HEAT CONSERVATION

1. HEAT TRANSFER PRACTICES

Evaluation of specific heat transfer applications did not occur, nor were any heat transfer practice issues raised during the implementation review. The geometric design of these exchangers should be checked against HTRI or similar programs for design effectiveness.

2. UNIT HEAT BALANCES

What appears to be the greatest problem regarding energy inefficiency in the Neftochim refinery involves the lack of a comprehensive energy efficiency policy. In the past, the refinery was concerned with production of on-spec products, with little regard for the energy requirements to produce these products. It is absolutely necessary for Neftochim to develop some type of energy conservation policy. This may be more critical than ever since the refinery appears to be having difficulty obtaining sufficient crude to operate the complex at design capacity.

There are several areas where significant energy inefficiencies are occurring:

1. Fired heater efficiencies are not regularly checked, and it is suspected that oxygen requirements to the furnaces are substantially exceeded.

2. The fuel gas to the furnaces does not appear to be monitored properly, which also could lead to heater inefficiencies.

3. The Atmospheric Distillation Columns appear to be doing a poor job of fractionation. An outdated design (using a single pumparound) contributes to the poor product split and energy inefficiency.

3. HEAT TRANSFER EQUIPMENT ANALYSIS

3.1. Fired Heaters

The fired heaters of any refinery complex generally consume more energy than any of the other types of equipment. It is therefore most important to optimize the operations of the furnaces. Unfortunately, the furnaces appear to be the equipment items most neglected in the Neftochim refinery, both in terms of physical condition and operational optimization. The following fired heater inefficiencies were noted during the evaluation study:

1. The flue gas concentration is not regularly monitored, therefore the actual operating efficiencies of the furnaces are seldom calculated. The refiner doesn't really know how inefficiently the furnaces are operating.

2. The air preheat systems were either inoperable (as on the Reforming Unit, the preheater was bypassed), or inefficiently operated (as on the crude unit furnace). The crude heater on AD-5 was operated with:

   i) The air preheat dampers locked in a partially open position on both the air to the preheater and the bypass.

   ii) The burner registers at the heater were wide open (including burners that were not being fired), allowing significant amounts of ambient air into the firebox, along with the partially preheated air.

3. Several large holes (as large as 5 ft^2 area) were detected in a couple of the fireboxes allowing significant ingress of air.

4. Poor flame characteristics were noted on the heaters, including flame impingement of the tubes in some cases.

5. There was no convection section heat recovery on the furnaces that were evaluated. Atmospheric Distillation and Catalytic Reforming Units employed furnaces with air preheaters, and all-radiant type furnaces were utilized on the Distillate Hydrotreating Unit.

From the above discussion, it is apparent that significant heat losses occur around the fired heater sections of the refinery.

3.2. Heat Exchange Trains

The design of the process units in Bulgaria was done by the Soviets. The heat exchanger design philosophy appeared to be to use standard size exchanger bundles (multiple bundles, as required) to achieve the desired heat transfer. In general, multiple bundles are utilized for most heat exchanger services. In the case of the crude exchange system, 12 standard size bundles per train were employed. This contributes to larger pressure drop than necessary, and hence, some degree of energy inefficiency. Multiple exchangers were also used for the Catalytic Reforming Unit combined feed exchanger service. Current design practice is to utilize a single, large vertical exchanger (or welded plate type) to achieve the desired degree of heat exchange.

3.3. Waste Heat Recovery

Fired heater and / or process unit waste heat recovery did not appear to be a high priority item in the original design of this refinery complex. Air preheaters are used on some of the furnaces but other forms of fired heater waste heat recovery

are not currently utilized. There is a process Waste Heat Boiler on the FCC Unit that was shutdown during the evaluation. It is presumably not functional.

3.4. Economics of Increasing Surface Areas

It is suspected that the economics of optimizing the surface areas of heat exchangers in the original process designs was not investigated. The age of the units and change in energy costs since the commissioning of the units would indicate that the heat exchange economics should be undertaken. This should be done especially for heat exchanger equipment that requires replacement due to the advanced age of the equipment. To properly assess the suitability of continued use of the existing heat exchangers, performance test data should be collected. Due to the limited duration of the evaluation study, and the fact that the process units were operating at significantly reduced throughput compared to design, sufficient data was not collected to completely assess the heat exchanger efficiency question. It is expected that improvements in energy efficiency could be found in optimizing the heat exchanger systems.

4. STEAM SYSTEM

4.1 Steam Balance and Utilization

Steam for the Neftochim refinery complex is produced in a Central Power Station (where electricity is also generated). The only possible steam production outside of the Central Power Station would be at the FCC Unit Waste Heat Boiler. This system was shutdown during the time of the evaluation - and apparently had been shutdown for some time.

A steam balance was not undertaken during the limited time of the refinery evaluation. This would appear to be a worthwhile endeavor as approximately only 20 % of the condensate is returned to the system. Most of the remainder is rejected to the Waste Water Treatment System. Returning a higher percentage of condensate to the steam system would appear to improve the energy efficiency of the steam system and reduce the load on the Waste Water Treatment System. The reason for returning only 20 % of the condensate to the steam system should be investigated.

Neftochim does not utilize steam turbine drivers. This is in direct contrast to typical Western refinery operating practices, particularly for critical services. Improved energy efficiency and process operability could be obtained by greater utilization of steam throughout the refinery complex.

4.2. Selection of Pressure Levels

Steam generated in the Central Power Station is exported to the refinery and petrochemical plant at the following conditions:

140 bar g (for electrical power generation only)
100 bar g (for electrical power generation only)
40 bar g @ 450 °C
20 bar g @ 350 °C
15 bar g @ 320 °C
10 bar g @ 280 °C

Steam is also let down at the process units to 1.5 and 0.6 bar g.

4.3 Condensate System

Condensate return from the refinery is pumped to twin holding tanks where it is batch tested for contamination. Failing batches are rejected to waste water for treatment. Passing batches are filtered with activated carbon, and enter the regular water treatment cycle. This cycle consists of two stages of desalinization and filtering pH adjustment. The treated water subsequently fed to the powerhouse boilers. Since less than 20% of the condensate is returned to the boilers, the potential exists for energy conservation by hot polishing the condensate.

4.4 Insulation

Design insulation materials and thicknesses in the steam system have been maintained.

4.5. Potential Effect of Energy Savings Projects to Steam Balance

Virtually no steam is generated in the process units that were evaluated (via process fired heater waste heat recovery). Steam as motive force (e.g. for driving compressors) is not utilized. The process units consume steam in two ways: either process requirements (e.g. stripping steam to fractionators) or as an atomizing medium for the fired heaters. The process units must import the steam as required from the Central Power Station.

5. HEAT REJECTION SYSTEMS

5.1 Cooling Water Systems

At the time of this evaluation, the operating cooling towers were reducing the cooling water temperature only 4 °C. The towers are designed to lower the temperature 10 °C. It was apparent that significant work would be required to remedy the deteriorated physical conditions of these cooling towers. Neftochim is aware of the shortcomings of their system and is attempting to schedule the maintenance work required to improve their cooling water system performance.

5.2. Air Coolers

Air fin coolers appear to be preferred to water coolers in cooling/condensing services, particularly on the Atmospheric and Vacuum Distillation Units. In the other units evaluated, air coolers remove the majority of the heat from the process streams, with water coolers utilized as trim coolers.

The air fin coolers are installed in large bays (in some instances, only one fan per bay and one bay for the entire cooling service) without variable speed or adjustable blade pitch capabilities. Hence, there is no flexibility in adjusting either the heat removal from the system or the utility requirement to remove this heat. The air coolers are simply turned on and allowed to operate as they will. This is obviously not the optimum method of air cooler operation, and can contribute to fluctuations in process operating conditions (depending in changes in climatic conditions) along with unnecessarily high utility consumptions.

5.3. Equipment, Piping and Stream Heat Losses

In general, the insulation throughout the refinery appeared to be in relatively good condition.

5.4. Recovery Systems

No unusual or elaborate systems for heat recovery by the heat rejection systems (air or water) are utilized.

5.5 Tracing and Temperature Maintenance Systems

No electrical tracing was evident anywhere in the Neftochim refinery. Steam tracing for freeze protection was minimal. Heat tracing for temperature maintenance was by steam in steel tubing. There was no temperature control (for steam conservation and over temperature protection) on any of the steam tracing.

6. USE OF HOT OIL LOOPS

Hot oil loops were not utilized in any of the process units evaluated. A hot oil loop should be considered wherever there is possibility of hydrocarbon leaking into high pressure steam.

E. MECHANICAL DRIVE SYSTEMS

1. COMPRESSOR/FANS

All the compressors observed at Neftochim were reciprocating compressors. Almost all the compressors are driven by synchronous motors and are of Soviet design and manufacture.

The fans on the cooling towers are air coolers are of a massive, single blade, fixed pitch design. They are also of Soviet design and manufacture. The drives for the fans are induction motors. The axial fans on the furnace preheaters were also driven by induction motors.

For more information on compressor/fans see Section F.3.4. - Rotating Equipment.

2. SPECIAL PUMPS

All the pumps observed were of the types normally found in refineries. There were no special pumps, such as liquid ring vacuum pumps on the vacuum towers.

3. ELECTRIC MOTORS

Except for the six steam turbines driving the six electrical generators in the Power Station, all mechanical drives at Neftochim are electrical motors. Beside the Soviet built totally enclosed fan cooled (TEFC) and explosion-proof (XP) induction motors, there were large number of synchronous motors. The synchronous motors varied in size from 35 KW (47 hp) to 4,000 KW (5,362 hp), with most applications being compressor drives.

The Soviet motors were very large even allowing for the additional iron needed with 50 Hz motors versus 60 Hz motors. Neftochim said they had few problems with their motors and they were not a maintenance problem. This was born out by the relatively few motors being serviced and waiting to be serviced in their motor repair shop.

In summary, Neftochim is a refinery with all electrical drives, with most compressor drives being synchronous motors. Variable speed power sources should be considered for fan drives. As older motors are replaced, the economics of high efficiency motors should be looked into.

4. STEAM TURBINES

All six steam turbines in the power station were Soviet built and varied in size from 12 MW to 63 MW. Three had inlet pressures of 10 atm (2058 psi) and the other three were 100 atm (1470 psi) inlet pressure. One of the 60 MW turbines was being overhauled at the time of the evaluation.

The six power station turbines were the only steam turbines in the refinery.

5. SPECIAL EQUIPMENT

The vacuum towers on VD-1 and VD-2 are equipped with 3-stage steam injectors. At the present time, the refinery has not given serious consideration of using liquid ring pumps to increase the vacuum and decrease energy usage.

The only item of special equipment/mechanical drive, stated as under consideration by Neftochim, is an expander on the FCC regenerator flue gas. At this time, the following significant considerations should be thoroughly investigated prior to implementation of an expander and connecting equipment:

- It is a very expensive item of equipment requiring diligent operator attention.
- Neftochim has limited experience with high speed rotating equipment/
- There may be other more profitable energy consumption reduction projects.

11

F. MAINTENANCE / MECHANICAL OBSERVATIONS

1. OVERALL IMPRESSIONS

The refinery was visited during a period of severe crude supply shortage which brought refining capacity down to between 25 and 30% of design capacity. The normally planned two year turnaround cycle was interrupted by this partial shut-down and it was difficult to direct professional attentions towards energy savings implementation. Two schedules were examined for TAR (Turnaround planning). The first schedule was a master time frame schedule illustrating each refinery unit by quarter and including assignments of work through the year 1991. The second schedule detailed the planned work. Neither schedule was a Critical Path Method (CPM) equivalent. The Maintenance/Mechanical Engineering Department exhibited strength in practical maintenance and has recently sought to enter into preventive maintenance computer programming and begin an historical data base. Further, there was a stated interest in expanding their capabilities in equipment testing and gaining technology in the area of vessel recertification.

On site fabrication and refabrication included the capability to build heat exchangers, make castings to one tonne, balancing machines to five tonnes and programmable repeating tools as sophisticated as a Fanuc System P-Model G. Large shops were occupied with the repair of pumps, valves, rewinding motors and the like. Impressive as the capabilities were, one noted large and expensive tooling machine was unmanned and unproductive and may have been a consequence of the partial shut-down. The dearth of equipment manufacturers and repair shops in Bulgaria along with mostly non-domestic equipment installed in the plant are also strong contributing factors to the "need to do it in-house". On site warehousing existed at 27 locations with no defensible argument for this very high number. In-house programming has already begun to inventory and automate information linking requisitions and costs.

It was observed that construction had been initiated on an air conditioned, windowless building to house an expanded use of numerical control machinery.

2. UNIT REVIEW

2.1 Crude Units: AD-4, AD-5 and VD-1

AD-4 and AD-5 are identical units and are controlled on the second floor, along with VD-1, of a circular building. The semi-graphic control board occupies about 270° of arc with the building having a diameter of 20 m and the control board of 15 m. The instrumentation on the control board is basically miniature 6 inches by 6 inches Russian built pneumatic single pen recording controllers and multi-point T/C Temperature Recorders (TRs) patterned after the old Honeywell-Brown containing vacuum tube amplifiers. The relay-based alarm system has its indicators mounted in the semi-graphic portion of the control board.

A Neftochim designed and built Distributed Control System (DCS) is being tested on AD-5. The system has a maximum configuration of 192 control loops but only 44 are presently configured and being used. Presently being used are two independent CRTs on separate consoles. This DCS system at its present stage, most closely resembles a Honeywell TDC-2000.

Except for some Hungarian turbine meters measuring crude inputs and some East German P.D. meters measuring fuel oil to and from the furnaces, the instrumentation on the unit is from the USSR.

The three units are all basically instrumented the same. The control valves all have blocks and bypasses; there are no handjacks. The pneumatic tubes from the control room out to a junction box on the unit are plastic and in cables. From the junction box to the instrument, the tubing is copper. The instrument process connections are 18-8 SS tubing with welded or brazed fittings and valves. Flows and differential pressures are measured with a large heavy DP transmitter that closely resembles the old Barton Bellows meter. Meter manifolds are made of separate welded valves. Level transmitters are the displacement float type with a meter or longer floats.

The basic instrumentation on AD-5 is obsolete and inadequate for the 1990s. Completion of the DCS and subsequent installation of advanced controls for minimizing energy usage and enhancing product split are a minimum necessity for AD-5, if Neftochim is to successfully compete in the 1990s and beyond.

2.2 Fluid Catalytic Cracker (FCC)

The FCCs control room occupies the second floor of a 20 meter by 35 meter building. The control board is 'U' shaped with the base of the 'U' being about 2[illegible] meters and the legs about 8 m. The control board is divided into five sections:

- Mild Hydrocracker
- Reactor/Regenerator
- Main Column
- Vapor Recovery Unit (VRU) and Gasoline Stabilizer
- Flue Gas Waste Heat Boiler and Precipitator

The board instruments are mostly pneumatic, miniature 6" x 6" single pen recording controllers, two and three pen recorders and indicating controllers. The temperature controllers are PID and all the other controllers are PI. The TRs are large case clones of L&N Speedomaxes with 1960s style solid state amplifiers. The feed is measured by Hungarian turbine meters.

The flow and differential pressure meters are Soviet and Polish. The process connections are SS tubing with brazed or welded fittings and connections. Flow meter manifolds were composed of discrete valves for blocks, bypass and drains, there were no manifold valves. The displacement type level transmitters were

Soviet built. None of the level transmitters observed had less than a meter length float.

The slide valve feeding regenerated catalyst into the reactor feed has a Limitorque hydraulic operator. The control valves all have blocks and a bypass valve. There are no handjacks.

The Soviet built motors are fed by overhead cable trays from the MCC to a stanchion by the motor, then underground to the motor. The lighting power is all overhead in conduit. Emergency lights are incandescent. All the other lighting is HID (High Intensity Discharge).

Compared to US and Western Europe standards, the instrumentation for the FCC complex is obsolete and inadequate. For this most important of the refinery units, as a minimum, a DCS needs to be installed with advanced control schemes for minimizing energy usage, optimizing the reactions and enhancing the product split if the FCC is to be a competitive unit in the 1990s.

3. EQUIPMENT CONDITION SUMMARY

3.1 Fired Heaters and Boilers

Two manually operated heaters at AD-5 were surveyed and flue gas tested. A fuel efficiency meter manufactured by Neotronics of Great Britain was utilized to sample flue gases at the single sampling point provided in the exhaust duct of each furnace. Readouts were as follows:

HEATER	EFFICIENCY %	TEMPERATURE °C	% O_2	% EXCESS AIR
K-101	61.9	349	12.0	128%
K-102	57.9	321	13.8	184%

During the test the combination of heavy fuel oil and gas, was metered at 3 tonnes fuel oil to 1 200 m^3 gas per hour. The bottom two burners, of a four high deck, six compartmented heater with a convection section, were in operation to raise the product temperature from 200 °C (392 °F) to 400 °C (752 °F). The survey results noted that the roof was tight and the firebrick appeared to be in good shape, however, flame characteristics varied widely from box to box and even though the operator attempted to make adjustments to the burners, flame characteristics were only marginally improved. It was noted that unfired burner ports on the two upper decks were wide open and in one case the port shell was damaged beyond repair. Almost all air registers on the furnace were fully open with air also being supplied by the air preheater fan.

3.2 Heat Exchangers

An attempt to organize an independent heat exchanger test over the crude train at AD-5 was frustrated in part by the lack of gauges and test wells in the field. Consequently data was taken from a combination of field gauge readings and information from a locally designed DCS in the control room. No anomalies were noted when compared to design. Insulation was missing from three of the floating heads on the single pass heat exchangers. All other interconnecting pipe was considered adequately insulated including the desalting units. Test stations on the shell of each exchanger indicated regular non-destructive examination using a Krautkramer Branson thickness gauging instrument. It was stated that high pressure water jet cleaning was the singular method employed for cleaning exchanger bundles.

3.3 Vessels

One of two Catalytic Reforming Units which was in operation (CR-2), was selected to survey vessels. Unfortunately, there had been a fire on the unit, a week previous to the team's visit and the operator warned us off the unit, preventing a close scrutiny of the vessels. Further, it was determined that the Mechanical Engineering / Maintenance group considered their highest priority gaining a knowledge of the methods and practices utilized in the West to test and recertify vessels in general. It was concluded that the unit was being operated in a dangerous condition.

3.4 Rotating Equipment

All pumps at AD-5, CR-2, FCC and the Water Treatment Plant were inspected in the field and reviewed against supplier produced curves for matching motors and pumps. All pumps were spared one on two or one on three. Although complete maintenance records were not available to confirm claims that seals and bearings were not inordinate problems, there were no survey observations suggesting that these are major problems as had been the case in another East European country. High pressure/high temperature pumps at the Catalytic Reformer were reportedly suffering from sudden failures and fly-away embrittled pieces and parts. The hazard was such that the operator at CR-2 cautioned against approaching the equipment. The pumps and drives at the Water Treatment Plant demonstrated a strong attempt to match, spare and standardize on equipment manufactured in Bulgaria and the USSR.

Five Soviet designed and manufactured horizontal reciprocating compressors were examined at CR-2. All were of a standard design including a new installation. The matched sets were 375 rpm, 700 kW synchronous motors driving compressors supplying 0.363 m^3/sec of H_2 at 60 atm and 81 °C. Two compressors were down for major overhaul. No centrifugal-compressor installations were noted in Neftochim.

In particular, the operator at CR-2 requested a pump catalogue representative of western supply illustrating high pressure and temperature pumps capable of handling pressures of 40 atm, temperatures of 400 °C and deliveries of 250 m^3/h.

3.5 Steam System

At the power station there are a total of eleven Soviet designed and built boilers. Five produce 100 atm (1 400 psi), steam and are rated at 140 tonnes/h (4 667 lb/min) each, and six produce 140 atm (2 058 psi), steam and are rated at 320 tonnes/h (10 667 lb/min). The six Soviet built turbo-generators are rated as follows:

Table F.3.1 - SOVIET BUILT TURBOGENERATORS

Number	Turbine Inlet atm	Nameplate / Actual Power MW	Comments
1	90	30 / 30	Extract at 0.6 & 1.5 atm, condense remainder
2	90	12 / 6	Extract 20, 15 & 10 atm, condense about 20%
3	90	60 / 60	Extract 15 & 1.5 atm, condense 40% (max)
4	130	60 / 60	Back pressure at 10 atm (140 psi)
5	130	60 / 50	Back pressure at 10 atm
6	130	63/50	Back pressure at 10 atm.

No steam is generated in any of the refinery furnace convection sections. The only waste heat boiler is on the FCC regenerator flue gas. This boiler was not operating and there were no plans to bring it on stream in the immediate future. The main steam pressures used in the refinery were 10 atm. and 1.5 atm.

3.6 Piping and Valves

Piping and valves were surveyed from the Power House steam supply in the pipe rack to AD-5. 10 atm steam supply in an 800 mm carbon steel sched 40 pipe was judged to be pressure tight, adequately designed for expansion loops, supports and condensate collecting downcomers and steam traps. The utility manager expressed interest in gaining information on in-line installed instrumentation to monitor steam quality and a change in some steam trap applications where freezing becomes a seasonal problem. Valves in the rack were

also pressure tight. At AD-5 valve stems, packing and gaskets were examined for characteristic problems on the hot service. No trend exhibited itself and only pipe which had been temporarily installed at an incorrect elevation, (causing a tripping hazard), and had been accepted as a permanent installation in the immediate area of the pump stations was criticizable. Flanges, bolt ups, welds and vibration were checked on HDT-3 and although there appeared to have been major field alterations in the past, the pipe and valve situation was pressure tight. Platform maintenance access to valves and general housekeeping on the other hand was poor.

3.7 Instrumentation

The control instrumentation in Bourgas is basically pneumatic and of Soviet manufacture. There is a small number of Eastern-bloc instruments: Polish DPs, Hungarian turbine meters and East German P.D. meters. The control valves were of Soviet manufacture, all had blocks and a bypass valve; there are no handjacks in Neftochim. Most DPs are of a Soviet design that look like the old Barton Bellows meter. The Polish DPs were built under Foxboro license and are a clone of the Foxboro 13A. The level transmitters are also of Soviet manufacture, mostly displacement float-type with meter long floats and large transmitter/controller assemblies. The Soviet pressure tube was a bourdon-tube type. The refinery stated that until lately the Soviet instruments had been relatively maintenance free but now were becoming high maintenance items as the equipment seemed to be rapidly deteriorating.

Temperature measurement is by bi-metallic thermometers for local indication and thermocouple (T/C) for remote indication, recording and control. Both J and K T/Cs are used with the K type being used over about 500 °C. The multipoint recorders are Soviet built and appear to be based on the old 1950 era Honeywell-Browns with miniature vacuum tube amplifiers and L&N Speedomaxes with 1960 vintage discrete component solid state amplifiers. For temperature control, the T/C signal is converted in an EMF/P transducer to a pneumatic signal and then fed to a PID pneumatic controller. There is very little heat tracing of instruments for freeze protection.

The board instruments throughout the refinery are basically Soviet made 6" x 6" of the type found on US refinery process units built in the early sixties. There were no electronic analog or single loop digital controllers. Neftochim's Automation Group has designed and built its own Distributed Control System (DCS). This DCS more than anything else resembles a TDC-2000. The system is now being tested on AD-5.

With the DCS, Neftochim has the opportunity to replace their obsolete and inadequate pneumatic control equipment at very reasonable costs. As the DCSs are installed, the Advanced Control Group can implement their schemes for energy savings, reaction optimization and product split enhancement. Data from some US refineries indicates it is possible for savings from the Advanced Control

schemes and the DCS to pay for the advanced control equipment and installation costs in less than a year.

Advanced controls

With the implementation of distributed control systems (DCS) on their process units, the opportunity for a greatly increased use of advanced controls and stratagems dawned for US refineries. It became apparent to many of these refineries that the increased profits from advanced controls would quickly payout on analog instrumented process units, the costs of a DCS and the advanced controls. One US major decided to convert all of its refinery process controls to DCS. Their experience was that four (4) to twelve (12) months of the new control's operations was required to recover the DCS / advanced control costs for almost all units.

With the implementation of DCSs, the following unit advanced controls should be considered:

- Crude Units

  Decoupling the side draws - This control allows the board operator to increase / decrease a product draw (changing that product's IBP and EBP) without upsetting the other product sidedraws.

  Cutpoint calculation - This control replaces an expensive high maintenance analyzer. Calculating and inferring boiling point measurements such as 95% point from tower measurements. This measurement can then be used for tower control.

  Pumparound control - This control looks at the pumparound flows, temperature, energy use and heat transfer and determines the economics of increasing/decreasing pumparound to increase/decrease products flow.

- Reformer Units

  Reactor optimization - Controls reactor temperatures to optimize the catalyst life vs. octane number output.

  Prefractionator control - Sharpens fractionation so as to minimize catalyst poisoning heavy ends and non-reactable light components in the reactor feed, thereby increasing the reformer's octane barrel output.

- Hydrogen Desulfurizers

  Hydrogen control - Ratio hydrogen to feed to smooth flow, enhance the desulfurization reaction and extend catalyst life.

- Furnace / Heaters

  Furnace air control - Regulate the combustion air to minimize excess air and prevent smoke formation.

When starting an advanced control project, a 'process audit' covering those areas that the advanced controls will impact, needs to be made. This audit should show all pertinent data such as flows, process condition, energy usage, product quality and stream values. This establishes the baseline. Later, three (3) to four (4) months after implementation of the advanced controls a final process audit needs to be taken. This audit collects the same data that was taken for the starting audit. With the data from the two audits, a final report can be issued showing the actual savings vs. the estimate savings and reasons for any differences. Besides establishing credibility for the project estimate and payouts, it also provides the feedback necessary to improve the savings estimating.

Ideal members of this final audit team are the advanced control engineer, the process unit operations engineer and one of the consulting engineers, if used. With the high degree of savings seen on advanced control projects, there is usually a push for their rapid implementation. This push, plus a lack of availability and/ or expertise in the advanced control area being implemented, generally makes it prudent to hire outside expertise, i.e. consultant. This an opportunity to upgrade the facilities staff expertise. A staff advanced control engineer/s should be assigned to work with and monitor the consultant. On later projects, this will allow more (or sometimes all) of the same type of work to be done in-house.

Computer and advanced controls group

Neftochim has a fair size plant main frame computer system. The two main frame computers are IBM 4341, with most of the auxiliary equipment also being IBM equipment. There are twenty-nine 3350 and four 5061 fixed disc drives. Also there are four 3350 200 megabyte dual removable disk drives and nine tape drives.

There are 120 people in the computer group, half of whom work with the main frames. Twenty-eight work in a process control group that has developed their own DCS. They are now refining and test installing it on select units (AD-5). Another five people are in a personal computer (PC) group, developing applications for in-plant use of PCs. The remaining twenty-two people are in an advanced control group.

This group (about one-half female) is now developing a program to optimize the product cuts on a crude unit, while at the same time minimizing the unit's energy usage. All the control loops being manipulated have operating limits installed on them to prevent unsafe operation. The program is now finished for the first three crude unit towers, preflash, atmospheric and strippers (kerosene and diesel). Work is now proceeding on the remaining two towers; the naphtha stripper and the naphtha splitter. The group has developed another program that optimizes the crude preheat train. This advanced control program sets the flow through the

exchanger train and pumparounds to maximize heat transfer and minimize the energy requirements.

The work of the computer and advanced controls group over the next five years will be critical to the modernization of Neftochim's process control systems up to a standard that will allow the refinery to compete with other European refineries during the 1990s and beyond.

3.8 Electrical Equipment

All of the electrical equipment observed on the units is suitable for use in NEC Div. I areas even though almost all of the process areas would be classified Div. II under API RP-500A. All the lighting was in explosion-proof and not vapor-tight fixtures. All switches, ammeters, relays and spark producing devices were mounted in suitable explosion proof enclosures. All the motors were totally enclosed fan cooled (TEFC) explosion-proof (XP) except for some large low speed synchronous motors which were totally enclosed with internal water cooling and explosion-proof. The control rooms and motor control centers (MCCs) are located outside battery limits and meet RP-500A requirements for "Non-hazardous Location" designation. The electrical equipment in the control rooms and MCCs was general purpose and suitable for the area classification. Almost all of the electrical equipment is Soviet. The newer MCCs are Bulgarian manufactured and the 110 kV breakers at the power station were Romanian (French licensee) built. The Soviet equipment, while certainly adequate, was much more massive and heavy than equivalent U.S. equipment. Between the two and three layers of paint and the Cyrillic alphabet, reading equipment nameplates was both frustrating and somewhat uninformative.

Neftochim has an excellent well designed electrical system that has been designed and then built to provide the high degree of system reliability and redundancy necessary for an all electric drive refinery. In future years for motor replacement, the economics of high efficiency motors and for some applications variable speed drives, should be considered.

3.9 Corrosion

Corrosion inhibitors were being administered into the system at AD-5 in the normal manner and very satisfactorily as confirmed by the unit operator, maintenance mechanic and senior mechanical engineer. All, however, expressed a strong interest in the installation of in-line coupons to monitor conditions. Further, they stated that at present they were continuing with an aggressive metal thickness testing program on heat exchangers, pipes and critical surfaces to establish parameters and a data base.

3.10 Insulation Condition

Fiber filled and jacketed insulation on all steam supply lines from the Power House to the refinery units was well maintained and in good condition. On AD-5 there were instances where insulation had been removed from pipe and vessels, repairs completed and the repaired area left uninsulated. The recirculating hot air fan equipment B-102 rated at 100 000 m^3/h was not insulated at the time of the inspection. The HDT-3, CR-2 and FCC units exhibited similarly repaired areas left uninsulated. As a general rule flanges were left uninsulated. It was noted that some heat exchanger shells were wire reinforced asbestos cement insulated.

3.11 Specialty Items

Gasoline and diesel blender

Three grades of gasoline are blended at Neftochim; 96 Research Octane Number (RON) leaded, 93 RON unleaded and 86 RON leaded. Also, two grades of diesel are blended. The micro processor based digital blender being utilized consisted of two desk top stations, each utilizing a 20" CRT and keyboard. The blender was designed, built and programmed by Neftochim's Automation group. The blender provides for a maximum of eight components including TEL and a totalizer. The recipe blend is set for the component stations to 0.1%. A check total is activated and the blender checks the totals selected to determine if the sum is exactly 100%. If the total is not 100%, a total blend error is indicated along with the total computed.

The blending is done to bring the integrated errors of each component to zero. If a component cannot maintain the blend rate, the blending rate is ramped down and the condition alarmed.

The metering is done with Hungarian NMG turbine meters. The TEL drums are digitally weighed and TEL is moved from the drum by pressuring the drums with nitrogen. The lab analyzes the TEL for lead content and this determines its ratio in the blend. A grab sample is taken of the blend and sent to the lab for octane analysis by the lab's knock engine.

A program developed by the automation group is used to predict the RON of the blends. The refinery has been pleased with the results of the program, with the actual lab's knock engine number closely approximating the program's prediction.

During the inspection, housekeeping was judged to be adequate, although a sudden product leak developed at a small bore fitting adjacent to the pump installations.

Tank farm

Two floating roof 20 000 m^3 capacity tanks were spot checked to verify data, conditions and containment. The crude tanks did not have mixers installed on them. The crude tank was contained on a concrete foundation extending some 3 ft beyond the circumference of the tank. All other containment was earthen dike with no protection of the soil between the dike and tank foundation. No satisfactory answer was obtained regarding quantities of sludge settlement in the tank nor information on clean-out and repair procedures. The diesel tank was inspected and found to have a ±6 ft segment of sealing missing. Further, the tank was sufficiently out of round as to disallow consideration of secondary sealing. Field measurement of tanks was manual, wire line and weight.

4. MAINTENANCE

4.1 Policies

Neftochim's production philosophy required an adherence to making the established quota (quantity and quality), of product and ignored to a degree efficiencies as seen in predictive maintenance and energy conservation. Indeed, maintenance as a program was to spare rotating equipment as much as possible and to follow the vendor's recommended maintenance schedule to the degree possible. Unfortunately, spare parts in some cases became scarce, material substitutions were inferior and spared, unspared and stationary equipment suffered under the production philosophy.

Whereas attitudes may shift quickly, organizations are much more difficult to remold. Survival in the past has meant self reliance in fabrication and refabrication to cover for shortages. In the short term, availability may not improve and maintenance/engineering will have to continue as presently organized; designing, casting, tooling and scavaging. The more traditional maintenance effort of unit maintenance, turnaround maintenance and contracting extra or specialized construction is organized much as it would be in a Western refinery. Warehousing on the other hand was scattered over twenty-seven different locations, (mini-warehouses), and was not defended against the arguments for centralized warehousing. It was noted that programming of the main frame computer to inventory, organize and control warehousing had begun.

The lack of a Critical Path Method (CPM) planning and scheduling package, coupled with a cost budgeting and tracking addition, adversely affects scheduled turn-arounds. A total maintenance system to improve overall organization and management operations and provide complete equipment/parts inventory control system does not exist.

4.2 History

The maintenance policy of Neftochim is in a state of change. It had to a large degree been severely affected by its production philosophy, plant organization, past budgetary procedures, state central planning and lack of software to plan, schedule, interface inventories and equipment historical data.

4.3 Current Practices

Practicing maintenance and attempting to solve mechanical engineering problems without the benefit of installed and portable non-destructive test equipment is normal at Neftochim. The lack of normal statistics recording for mechanical performance leaves the superintendent and engineer without the proper tools to initiate a preventive maintenance program. Further, research into problem parts, assemblies or machines is impossible without a historical data base.

It is recommended that the refinery form an energy audit group that includes a maintenance superintendent and a safety engineer. The group would be charged with conducting inspections with the authority to prioritize and order work that contributes to energy conservation and safety.

G. ENERGY LOSS MONITORING SYSTEM

The flue gas oxygen content of the refinery's furnaces/heaters is checked once every month or two. While this information is providing some data base, the results indicate that the supervision needs further training on energy/fuel management. In addition, unit operators need training in efficiently operating a furnace.

Neftochim has a large main frame computer system. While all the measured energy flows are being gathered in the data base such as power and steam flows into the unit, no fuel flow measurements to the furnace heaters were observed. This results in an incomplete data base for energy loss monitoring. Energy-loss monitoring has not been given a high priority at Bourgas and as a consequence little or no work is being done in this statistical area.

The advanced control group is presently addressing some of the energy loss areas such as:

- Excess air in furnace flue gas. The group has developed advanced controls strategies for use with a DCS and "in-situ" oxygen analyzer on a furnace.

- Crude unit tower losses. The group is modeling AD-5 to optimize product cuts while decreasing energy requirements.

- Crude unit exchanger train heat transfer. The group has a control scheme that optimizes the heat transfer in a crude unit heat exchanger train thereby decreasing furnace firing.

Summarizing, Neftochim must complete its energy metering measurements installation and get it into a data base that is accessible to unit supervisors and their operators, and forms part of the personnel evaluations. Also needed, is completion of its Distributed Control System (DCS) on AD-5 and extension of this system in the short term to the remaining refinery critical units. Then information from the DCS can be used to identify energy loss problems, energy use charges, and trends, and can be used to develop Advanced Control schemes to minimize energy usage.

H. FUEL SWITCHING/UTILIZATION

1. REFINERY FUEL SYSTEM

Refer to Section B.2 of this report for the discussion of the refinery fuel system.

2. COAL AT THE NEFTOCHIM REFINERY

2.1 Availability and Characteristics of Coal

This topic was not investigated during the evaluation of the refinery.

2.2 Potential for Use

This was not investigated.

2.3 Economics of Use

This was not investigated.

I. REFINERY EMISSIONS

1. SUMMARY OF ENVIRONMENTAL SURVEY

1.1 Refinery Sulfur Balance

The plant has recently started to estimate the SO_2 released to the environment. They recover sulfur via a Claus Unit without a tail gas treatment unit. The plant produces sulfuric acid and sodium sulfite.

The approximate sulfur balance based upon a crude feed rate of 7 760 000 tonnes/yr (at a sulfur content of 1.7 wt%) is:

Table I.1.1 - SULFUR BALANCE

SULFUR	TONNES/YEAR
INLET	
Total in with crude oil	132 000
OUTLET	
Recovered in Claus Unit	17 581
Estimated recovered in sulfuric acid	1 000
Estimated to sodium sulfite	1 000
Estimated from heaters	12 000
Estimated from boilers	26 000
Estimated in petroleum products shipped	74 419
Total out	132 000

1.2 Air Emissions

The plant has developed a preliminary estimate of the facility emissions.

TABLE I.1.2 - AIR EMISSIONS

Emission	Tonnes	"Typical" U.S. Refinery
Hydrocarbons	Per Year	(Estimated Total) 40 000
Saturated	186 600	
Unsaturated	37 000	
Aromatic	7 000	
Miscellaneous	6 000	
H_2S	200	
CO	13 000	6 000
NO_x	6 000	1 500
SO_2	38 000	7 000

A reasonable 1995 reduction would be:

Hydrocarbons	50%
CO / NO_x	40 - 50%
SO_2	40%

This could be accomplished by: installing vapor control in the tank farm area for hydrocarbon reduction; closer combustion control in the process heaters and power house for CO reduction; by desulfurizing the fuel gas for the process heaters or partially desulfurizing the fuel oil for the Central Power Station.

1.3 Water Quality

The current mechanical condition of the WWTP (Waste Water Treatment Plant) does not permit operation of the plant to meet the standards as set forth in State Decree No. 8.

Table I.1.3 - WWTP CONCENTRATIONS

Property	Decree #8 Stds.	Outlet of WWTP mg/liter	Outlet 3rd Lake mg/liter
BOD	< 5	150 - 400	60 - 70
COD	<25	300 - 800	170 - 300
TOC	< 10		
Oil	< 0.05	20 - 50	5 - 12
Total Susp. Solids	N/A	40 - 60	25 - 40
NH_4	0.05	N/A	15 - 30
NO_3	0.02	N/A	N/A
Total N	1.0	N/A	N/A
P	0.1	N/A	0.5 - 5
Fe	0.1	N/A	N/A
Pb	0.1	N/A	N/A
Phenol	0.001	N/A	N/A
Hg	0.001	N/A	N/A
Al	0.05	N/A	N/A
pH	6 - 9	7 - 9	6.5 - 7.5

It is not considered reasonable or feasible to suggest percentage reduction (or achievement) targets for water pollution as suggested above for air emissions because the opportunities of reduction are multiphased. Nonetheless, the following tasks should and can be completed by 1995.

- Initiate a water pollution control education program tailored toward the operators and designed to eliminate the release of oil to the sewer system.
- Conduct a block by block sewer system survey to determine major pollutants.
- Correct the cause of major leaks as determined by the survey.
- Obtain and install reliable spare parts for the non-operating clarifiers and aerators.

- Complete the project of up-grading the existing oil separators from manual cleaning to the mechanical skimming and sludge removal.
- Complete the start-up and place in regular operation the rotary kiln incinerator system along with conducting performance evaluations to ensure on-stream capability.
- Complete the installation of the second phase of the Incinerator construction.
- Remove the accumulated oily material from the clarifier and aeration unit.

Depending upon what funds are available to accomplish the above, the reduction of effluent pollution load could range from 10 - 60%. If all the above could be accomplished it should be possible to meet the Decree #8 limits.

1.4 Solid Waste Disposal

The plant has two separate solid waste disposal systems. The first is the normal solid waste generated at a production plant - scrap paper, wood, construction debris and office material. This waste is currently being hauled to an approved offsite dump area.

The second, and more pressing solid waste problem is the oily sludges currently being stored in various tanks and basins throughout the facility. It was estimated there is about 400 000 m^3 of various quality oily sludges.

With current technology and Western practices, there would appear to be only two basic solutions to this sludge problem - (1) have a reliable and continuous operating rotary kiln incinerator, or (2) chemically stabilize the sludges. The reasonable 1995 goal for solving the sludge problem is to have the existing rotary kiln in full and continuous operation.

To accomplish this goal, it is recommended that the castable fire proofing inside the kiln be replaced with a high quality fire brick capable of chemically resisting the acidic oily sludges. The operation of the incinerator at design capacity will provide for the proper disposal of the oily waste as it is generated and process the current inventory of sludge.

1.5 Impact of Maintenance Practices in Generating Emissions

It was evident that the lack of preventative maintenance and the repair of out-of-service equipment has a very serious impact upon the emission levels. This starts at the process block as evidenced by the amount of excess hydrocarbon containing streams released to the sewer. At the various pollution control treatment systems, the observed number of pumps, clarifiers, Dissolved Air Floatation (DAF) Units and aerators not working due to the lack of quality spare

parts was very evident. Quality spare parts must be made available and in some cases - i.e., the gear boxes of the aeration units - the units must be upgraded by providing complete new gearbox units.

1.6 Evaporation Losses

This is covered under section 1.2

1.7 Loss of Products to Solvents

Not observed or investigated.

2. HANDLING OF MATERIALS

2.1 Tetraethyl lead (TEL)

Not observed or investigated.

2.2 Aromatics

Not observed or investigated.

2.3 Solvents

Not observed or investigated.

2.4 Halogenated Hydrocarbons

Not observed or investigated.

2.5 Heavy Metals

The observed potential sources of heavy metals were:

- BS and W (Basic Sediment and Water)
- Desalter Water
- Oily Sludges
- Combustion of Heavy Oils
- Combustion of Water and Wastewater Sludges
- FCC Spent Catalysts and Fines

The tank bottoms from storage tanks, process units or the API separators are sources of accumulated heavy metals. These wastes were typically burned in the rotary kiln incinerator. The hot gases exited the heat recovery boiler without any particulate control. A portion of the heavy metals that volatilize and oxidize in the combustion zone are present as heavy metal oxide particulate in the stack gas. The amount has not been quantified, but the extent of the issue and lack of stack gas particulate control needs to be addressed. The non-volatile heavy metals would remain with the bottom ash. The bottom ash is currently being stored in a large concrete-lined pit. No ultimate disposal plan has been developed.

The burning of the vacuum unit bottoms in the power plant and process heaters release heavy metals to the flue gases. Currently no control devices are installed on either the boilers or the process heaters. If a flue gas desulfurization (FGD) system is installed for the boilers, a major portion of the heavy metals in the flue gas will be captured in the sulfur scrubbing material. The FGD sludge will then have to be managed to prevent environmental pollution.

The crude oil storage tank water drainage and the water from the desalter will contain heavy metals. Both of the waters are routed to the wastewater treatment plant. Some of the heavy metals will settle in the API and enter the environment by being burned in an incinerator. A portion of the remaining heavy metals will be accumulated by the biological sludge in the activated sludge treatment system. The bio-accumulated heavy metals in the waste activated sludge will be released to the environment by either the incinerator stack gas or in dust removed from the flue gas by the cyclones. The dust from the cyclones is currently being stored in a large concrete tank. An ultimate disposal plan has not been developed.

As stated in Section I.1.4 - Solid Waste, the spent catalyst and fines are currently being stored in piles above ground. Some of the fines become airborne and migrate throughout the environment. Any rainwater falling on the dust could leach heavy metals to either the river or groundwater. A plan for the ultimate control of this source has not been developed.

2.6 Sulfur

Refer to Section I.1.1.

2.7 H_2SO_4, HF

Not observed or investigated.

2.8 Combustion Products

Neftochim is considering mixing the oily sludge material currently in Lagoon No. 2 with sawdust produced by a local furniture factory for burning in the State

owned power plant. The feasibility of processing the oily sludge in this fashion will be tested in the future.

2.9 Tars

Not observed or investigated.

3. MEASUREMENTS OF EMISSIONS

There were no environmental measurements taken during the site visit.

4. SPECIFIC RECOMMENDATIONS

The mechanical and operational changes are recommended under the sections for air, water, and solid waste control.

A significant reduction in losses to the environment have been accomplished in the U.S. refineries by the implementation of various pollution reduction technologies. Pollution reduction requires that each employee become aware of the environmental problems associated with each release of hydrocarbon products.

A second major method to reduce pollution is to have the employee accept the responsibility of preventing or correcting various losses. This requires continual training. The training must be designed to cause an attitude change in the employee. The change must be from "... that leak is not my problem..." to "...that leak must be stopped". An employee award system has been effective to cause the necessary attitude change in Western refineries.

The third major reduction of environmental releases can be affected by providing a reasonable supply of spare parts. The spare parts for all critical control (seals, gaskets) and treatment (aerator and skimmer) units should be available within a few hours. It is necessary to have these spare parts available or the employee attitude and interest in pollution control will wane.

J. ENERGY EFFICIENCY IMPROVEMENT

1. IMMEDIATE OPPORTUNITIES

Below is a listing of the Immediate, Minimum Cost Opportunities for energy efficiency or operational improvements:

1. Neftochim must develop and implement a comprehensive energy conservation program. Currently, this refiner produces a variety of products with little or no apparent concern for the energy costs associated with producing these products.

2. Develop a comprehensive program that regularly and frequently monitors, calculates, and evaluates product yields and utility consumptions. This must be designed and operated such that regular energy conserving or product quality adjustments to the process units are encouraged and rewarded. Failure to act or comply should be clearly visible.

3. Invest in education programs or courses for following topics:

   a) Overall fired heater operations, with specific focus on proper burner operations and maintenance.
   b) Steam trap selection and maintenance.
   c) Vessel and other process equipment recertification.
   d) Engineering / Operations process design.
   e) Refinery and operations energy efficiency.

4. Invest in the following low cost evaluation equipment:

   a) Portable combustion analyzer.
   b) Infra-red thermal analyzer gun.
   c) Corrosion meter (about 3 000 US $).
   d) Thickness gauging system (audiogram, sonogram).
   e) FCC unit flue gas CO on-line analyzer.

5. Invest in computer software as follows:

   a) Simulation program for crude / vacuum distillation operations and other refinery units.
   b) LP Model for profit analysis based on new feedstocks and resulting product slate.
   c) PC based programs for:

      i) Maintenance / turnaround planning
      ii) Spare parts / warehousing inventory

6. Design and implement new steam trap selection & maintenance program.

7. Investigate steam & condensate recovery systems. Determine why only 20% of the condensate is returned to the steam system (the remainder is sent to Waste Water Treating).

8. Provide, evaluate, and replace as necessary utility monitoring instrumentation and confirm its accuracy.

9. Repair all fired heater firebox leaks.

10. Evaluate the overall complex utility balances and utility system capabilities. Consider replacement of large electric motor drivers with steam turbines.

11. Evaluate new and improved catalysts for various process units that may provide yield and energy efficiency improvements.

2. MEDIUM TERM OPPORTUNITIES

Below is a listing of medium term, intermediate capital cost (approximately $100 000 to $5 000 000) opportunities for energy efficiency or operational improvements:

1. Improve fired heater overall efficiencies.

   a) Repair air preheaters.
   b) Add / utilize automatic control of combustion air.
   c) Replace burners or heaters as necessary.
   d) Consider installation of convection section heat recovery systems for:
      i) Steam generation
      ii) Process fractionator reboiling
      iii) Process stream preheating
      iv) Hot Oil Circulation System
   e) Consider replacement of inefficient Distillate Hydrotreating Unit all-radiant furnaces with more efficient radiant/convection designs.

2. Commission some or all of the following studies all intended to improve the energy efficiency, operability, and/or product yields of the refinery :

   a) Installation of additional pumparounds on the crude distillation towers.
   b) Installation of vacuum fractionator structured packing and liquid ring vacuum pumps.
   c) Increasing the MEA concentration in the Gas Desulfurization Unit.

   d) FCC Unit efficiency improvements.
      i) Installation of Power Recovery System.
      ii) Installation of 'Catalyst Cooler'.
      iii) Installation of new 'Lift Gas' modification.
      iv) Installation of new high efficiency feed distributor.

   e) Installation of Advanced Control Instrumentation.
   f) Modification / revamp of existing Catalytic Reforming Unit(s) equipment (reactors, fired heater tubes, piping, etc.) for suitability to higher temperature (>1 000 °F) operations for increased gasoline octane capabilities.
   g) Conversion of existing Reformer(s) to Isomerization Unit(s).
   h) Incorporation of the following resid processing options:

      i) Burn resid in boilers (for steam generation) and desulfurize flue gas.
      ii) Consider partial oxidation (steam & electricity generation).
      iii) Consider resid conversion processes:

         * New FCC style RCC conversion process
         ** New Hydrocracking Unit
         *** Coker

3. Install gas blanketing / secondary sealing systems on tankage.

4. Provide variable cooling capabilities for air fin coolers by installation of variable speed or adjustable blade pitch equipment.

5. Convert Catalytic Reformer CR-2 reactors to radial flow types.

6. Repair / upgrade cooling tower facilities.

3. LONG TERM OPPORTUNITIES

Below is a listing of long term, significant capital investment (greater than $5 000 000) opportunities for greater energy efficiency or operational improvements :

1. Install a new Continuous Catalyst Regeneration Catalytic Reforming Unit in place of the existing Reforming Units.

2. Install reliable centrifugal recycle compressors when retirement of existing reciprocating machines becomes necessary.

3. Repair FCC Unit Waste Heat / CO Boiler.

4. Revamp FCC Unit reactor system to reduce catalyst contact time for improved yields.

5. Install recycle gas compressor on the Naphtha Hydrotreating Unit upstream of Catalytic Reformer CR-2 for improved Reformer operations.

6. Install suitable above ground storage tankage to provide reasonable working capabilities, particularly for crude feedstock, but also for refined products where adequate capacity is not currently available.

4. FURTHER WORK REQUIRED

Since the Neftochim refinery currently operates at throughputs significantly below rated capacity, it does not appear that further evaluation of this facility would produce any meaningful benefits. If and when the process units are operated at or near design capacity, evaluation of the utility efficiency and operational characteristics of this refinery could be justified.

J. ENERGY EFFICIENCY IMPROVEMENTS

1. IMMEDIATE OPPORTUNITIES

Description	Cost	Pay-Off
Develop and implement a comprehensive energy conservation program. This could include: • Formation of an energy audit team. • Purchase of publications (magazines, books, periodicals) related to specific energy conservation practices. • Attendance at AIChE, API, NPRA seminars related to energy efficiencies. • Precise monitoring of all utility consumptions for each process unit. • Calculation of energy consumed per unit of feed or product, and comparison to Western standards. • Authority to make changes to improve overall refinery energy efficiency. • Hold the unit manager responsible for energy consumption. Benefit: To significantly lower refinery energy costs, the unit superintendent must be involved; he will then involve all under his supervision on the unit. By: Neftochim	$0 - 100 000 Negligible if all the energy is now metered on the process units. Otherwise, the cost of installing those meters.	Immediate Also provides a baseline for further yearly improvements. Major US refiners have reduced their energy usage per barrel of crude run by over one third during the past 17 years. They are now averaging about a 1% reduction per year.

1. IMMEDIATE OPPORTUNITIES

Description	Cost	Pay-Off
Develop and implement a program to frequently monitor product yields and qualities along with utilities consumptions. Adjustments to process operating conditions would be recommended to optimize product values vs. feed and utility costs. This type of program could minimize lower value product production, maximize higher value product manufacture, and optimize product qualities (e.g., eliminate octane "giveaway").	minimum variable	Immediate
By: Neftochim		

1. IMMEDIATE OPPORTUNITIES

Description	Cost	Pay-Off
Attendance at education/training seminar related to fired heater operations and optimization with specific focus on burner operations and maintenance. The training representative should conduct the seminar at the jobsite if at all possible. Result will be immediate improvement in fired heater operations and energy consumption. Supplier: John Zink or equivalent	To Be Determined	Immediate

1. IMMEDIATE OPPORTUNITIES

Description		Cost	Pay-Off
Action:	Install an "in-situ" type oxygen analyzer in a process unit heater/furnace to help the refinery improve their heater/furnace efficiency by reducing the excess air in the flue gas. The heater selected should be on a unit where Neftochim has installed their DCS and which has a power operated damper in the combustion air/flue gas system.	$9 800	Indeterminate, but large. Should see a reduction of excess oxygen to the 2-5% range (Refer to Appendix C, AP-C.1).
Benefit:	An advance control strategy implementation, damper control along with the oxygen analyzer would allow control of combustion air. This control should allow the excess air to be minimized when firing the furnace.		
Vendor:	Factor Zirtek P.O. Box 539 Dewey, OK 74029 (918) 534-0143 Local Memeco Sales 1331 Brummel Ave. Elk Grove Village, IL 60007 (708) 228-9571		

1. IMMEDIATE OPPORTUNITIES

Description	Cost	Pay-Off
Attendance at steam trap selection and maintenance education/training seminar with special emphasis on reduced steam consumption. Result will be lower overall steam consumption. Supplier: Spirax Sarco, Inc. 2806 Center Circle Dr. Downers Grove, Illinois 60515	$5 000	Immediate

1. IMMEDIATE OPPORTUNITIES

Description	Cost	Pay-Off
Attendance at process equipment inspection, evaluation, and recertification training seminar. Result will be ability to enact a preventative maintenance program to improve turnaround maintenance efficiency and improve the overall safety aspects of the complex. Supplier:	To be determined	Undetermined

1. IMMEDIATE OPPORTUNITIES

Description	Cost	Pay-Off
Attendance at AICHE, API or NPRA seminars regarding refinery operations energy efficiency. Result will be improved understanding of modern refinery energy efficiency. Supplier: AICHE, API, NPRA or European Equivalent.	$3 000 (Estimate)	Immediate

1. IMMEDIATE OPPORTUNITIES

Description	Cost	Pay-Off
Attendance at engineering design and operating course. Result will be improved understanding of modern basic engineering design practices that can stimulate future process unit revamp options. Supplier: UOP or Equivalent	$3 000 (Estimated Course Cost)	Undetermined

1. IMMEDIATE OPPORTUNITIES

Description	Cost	Pay-Off
Purchase a portable combustion analyzer to measure fired heater stack gases for: CO, CO_2, O_2, NO_x and SO_x. Result will be independent audit of flue gases for improved fired heater energy efficiencies. Vendor: American Gauge Corporation or Equal	To Be Determined	Immediate

1. IMMEDIATE OPPORTUNITIES

Description		Cost	Pay-Off
Action:	Purchase One Infra-Red Optical Thermometer Thermo-Hunter 5140	$1 500.00	Estimated pay-off is 1.6 months at 1% per year energy savings.
Benefit:	Allows maintenance crew to measure surface temperatures and determine heat losses and/or hot spots for energy audits and trouble shooting surveys, thereby leading to energy savings through installations of additional insulation.		
Supplier:	Capintec		

1. IMMEDIATE OPPORTUNITIES

Description	Cost	Pay-Off
Purchase one thickness gauging system (e.g. sonogram, audiogram). Allows maintenance crews to accurately determine process equipment metal thickness to efficiently monitor equipment corrosion, schedule turnaround maintenance and preclude equipment failures. Vendor: Krautkramer Branson P.O. Box 350 Lewistow, PA 17044	$3 000	Undetermined

1. IMMEDIATE OPPORTUNITIES

Description	Cost	Pay-Off
Develop and implement a maintenance history program to definitively monitor process equipment required maintenance. Allows maintenance and operations staffs the ability of tracking equipment problems and devising strategies to reduce downtime due to equipment failures. By: Neftochim	Minimal Variable	Undetermined

1. IMMEDIATE OPPORTUNITIES

Description	Cost	Pay-Off
Investigate steam and condensate recovery system operations. Determine why only 20% of the steam condensate is returned to the condensate system, with the balance sent to the waste water treatment system. Result will be more efficient production and use of steam and condensate along with reducing the duty on the waste water treatment system. By: Neftochim	Minimal	Undetermined

1. IMMEDIATE OPPORTUNITIES

Description	Cost	Pay-Off
Provide, evaluate, and/or replace the utility consumption monitoring instrumentation and confirm its accuracy. Allows operations staff to accurately determine energy consumptions per unit of feed charged or product produced. Results will allow operating staff to adjust process conditions to improve overall energy efficiencies. By: Neftochim	Variable	Variable

1. IMMEDIATE OPPORTUNITIES

Description	Cost	Pay-Off
Repair all furnace firebox holes. Results in immediate reduction in energy consumption. By: Neftochim	Undetermined	Immediate

1. IMMEDIATE OPPORTUNITIES

Description	Cost	Pay-Off
Evaluate overall Neftochim utility balances and utility system capabilities. Allows refinery staff to qualitatively determine the capacity, reliability and future capability of the utilities systems. Results will determine if future utility adjustments (e.g. replacement of electric motors with steam turbine drives) could be justified. By: Neftochim	Minimal	Undetermined

1. IMMEDIATE OPPORTUNITIES

Description	Cost	Pay-Off
Evaluate new and improved process catalysts for operating units. Results could provide yield and energy efficiency improvements for various process units. By: Neftochim and various catalyst suppliers.	Minimal	Undetermined

2. MEDIUM TERM OPPORTUNITIES

	Description	Cost	Pay-Off
Action:	Contract engineering design firm to: • Reevaluate consumption of steam by refinery unit. • Study the viability of returning condensate to primary boilers.	$100 000	Indeterminant and dependent on reevaluation, study and construction.
Benefit:	Determine energy savings in steam supply and condensate return.		

2. MEDIUM TERM OPPORTUNITIES

Description	Cost	Pay-Off
Commission a comprehensive study to investigate how best to improve overall fuel fired efficiencies considering: a) Repair/revamp of existing air preheaters. b) Addition/utilization of automatic control of combustion air. c) Replacement/repair of burners as necessary. d) Installation of convection section heat recovery system for: i) Steam generation ii) Process Fractionator reboiling iii) Process Steam preheating iv) Hot oil circulation system Results in immediate energy efficiency improvements.	$200 000	Immediate

2. MEDIUM TERM OPPORTUNITIES

Description	Cost	Pay-Off
Commission a study to evaluate improved crude atmospheric and vacuum fractionation. • Evaluate installation of additional Atmospheric Fractionation "Pumparounds". • Evaluate installation of Vacuum Fractionation structured packing. • Evaluate changeover of vacuum steam ejectors to liquid ring vacuum pumps. Could result in improved product separations (reduced losses of higher valued products into lower valued products) at reduced energy consumptions.	$300 000	To be determined

2. MEDIUM TERM OPPORTUNITIES

Description	Cost	Pay-Off
Commission a study to evaluate atmospheric or vacuum resid processing options: • Resid conversion process i) New FCC-style RCC process. ii) New Hydrocracker, or revamp of existing Distillate Hydrotreating Unit. iii) New Coker • Burn Resid in Boilers (for steam generation) and desulfurize flue gas. • Consider cogeneration of steam and electricity and desulfurize flue gas. Results in improved refinery yields through conversion of low value resid material into higher value distillates.	$500 000	To be determined

2. MEDIUM TERM OPPORTUNITIES

Description	Cost	Pay-Off
Commission a study to evaluate improvement of FCC operations and efficiency considering: 1. Waste heat/ CO Boiler repair 2. Modification of reactor system to reduce catalyst contact time. 3. Installation of a new power recovery system. 4. Installation of a "Catalyst Cooler". 5. Installation of a "Lift Gas" modification. 6. Installation of a high efficiency feed distributor. Results in improved yields at reduced utilities consumption.	$300 000+	To be determined

2. MEDIUM TERM OPPORTUNITIES

Description	Cost	Pay-Off
Commission a study to evaluate revamping of the existing Catalytic Reforming Units to higher temperature/lower pressure operations for increased octane and yield benefits. Result would be improved yields of a very high value product.	$250 000	To be determined

2. MEDIUM TERM OPPORTUNITIES

Description	Cost	Pay-Off
Commission a study to evaluate improved energy efficiency by increasing MEA concentration in the Amine Unit. This could include installation of large activated carbon filter and/or reclaim system. Benefits: Allows increase of wt% MEA solution from 15 to 30% lowering energy consumption by up to 30%. The reclaim system would reduce corrosion, foaming and keep gas absorption capacity at design rates.	$300 000	To be determined

2. MEDIUM TERM OPPORTUNITIES

Description	Cost	Pay-Off
Commission a study to evaluate best implementation of advanced control instrumentation for optimized process operations. Results in improved energy efficiencies that are generally paid-off in less than one year.	$250 000	To be determined

2. MEDIUM TERM OPPORTUNITIES

Description	Cost	Pay-Off
Implement a complete steam trap selection and maintenance program. Allows maintenance staff to replace/repair steam traps to reduce excessive waste of steam. Will provide immediate energy efficiency improvements in the steam system. By: Neftochim, in connection with steam trap vendor.	Variable	Immediate

2. MEDIUM TERM OPPORTUNITIES

Description	Cost	Pay-Off
Invest in computer software as follows:		
a) Simulation program(s) for crude and vacuum distillation operations.	$110 000	Undetermined
b) LP model for profit analysis based on variable feedstocks and resultant product slates.	$200 000	Undetermined
c) PC based programs for:	$225 000	Undetermined
i) maintenance/turnaround planning ii) spare parts/warehouse inventory		
Allows systematic approach to operations and yields predictions, and provides a data base for a preventative maintenance program.		
Simulation Program Supplier: Hyprotech - "Hysim" Sim-Sci - "Process", "PRO/II", "ASPEN/SP" Chem Share - "Design II" AspenTech - "ASPEN PLUS" or equivalent		

2. MEDIUM TERM OPPORTUNITIES

Description	Cost	Pay-Off
Provide variable cooling capabilities for air fin coolers by installation of variable speed or adjustable blade pitch equipment. Results in stability of operations while reducing energy consumptions, especially during times of extreme ambient temperature variations. Supplier: Qualified contractor	To be determined	To be determined

2. MEDIUM TERM OPPORTUNITIES

Description	Cost	Pay-Off
Convert Catalytic Reforming Unit CR-2 downflow reactors to radial flow. Results in improved flow distribution at lower pressure drop. Hence improved yields at reduced utilities consumptions. Supplier: Qualified Vessel Fabricator	To be determined	To be determined

2. MEDIUM TERM OPPORTUNITIES

Description	Cost	Pay-Off
Install gas blanketing and/or secondary sealing of storage tanks. Results in reduced hydrocarbon losses to the atmosphere (improving environmental situation) and reduced preheat exchanger fouling due to oxygenated hydrocarbon polymer formation. Supplier: Chicago Bridge & Iron Contact : Kit Weirremeyer Kankakee (815)933-4440	To be determined	Indeterminant

2. MEDIUM TERM OPPORTUNITIES

Description	Cost	Pay-Off
Install a new Continuous Catalyst Regeneration Reforming Unit, to take the place of the two existing reforming units. Results in improved efficiency with the ability to produce high octane unleaded gasoline. Supplier: John Brown E & C or Equivalent	$45-50 mm	To be determined

2. MEDIUM TERM OPPORTUNITIES

Description	Cost	Pay-Off
Install a centrifugal recycle gas compressor on the Naphtha Hydrotreating Unit upstream of Catalytic Reforming Unit CR-2 (currently utilizing once-through hydrogen). Results in improved naphtha decontamination, hence improved reformer yields, longer catalyst lives, increased catalyst process cycles between regenerations, etc. Supplier: Dresser - Rand or equivalent compressor supplier.	$1.0-2.0 mm	To be determined

2. MEDIUM TERM OPPORTUNITIES

Description	Cost	Pay-Off
Install reliable centrifugal recycle compressors in various process units upon retirement/failure of existing poorly operating reciprocating compressors. Results in improved operability and reduced maintenance costs. Supplier: Dresser-Rand or equivalent compressor supplier.	$1.0-5.0 mm (variable)	Indeterminant

2. MEDIUM TERM OPPORTUNITIES

Description	Cost	Pay-Off
Install a high efficiency vertical combined feed / effluent exchanger on existing Catalytic Reforming Units. Done after retirement / failure of existing exchangers currently in service. Results in improved heat recovery at reduced pressure drop- both energy saving improvements. Supplier: Heat exchanger vendor.	Up to $5.0 mm	To be determined

3. LONG TERM OPPORTUNITIES

Description	Cost	Pay-Off
Replace outdated, inefficient Distillate Hydrotreating Unit all-radiant furnaces with more efficient radiant / convection designs. Results in higher fuel fired efficiency. Supplier: Heater vendor	$5.0 mm+	To be determined

137

3. LONG TERM OPPORTUNITIES

Description	Cost	Pay-Off
Repair / upgrade cooling tower facilities. Required for process operations. By: Neftochim	To be determined	Indeterminant

3. LONG TERM OPPORTUNITIES

Description		Cost	Pay-Off
Action:	Reformulation of gasoline. A study is needed to address the coming elimination of lead content and the reduction of aromatic levles in gasoline. Improving octane value through MTBE, and/or alkylation needs to be evaluated	$250 000 to 300 000	Environmental improvement
Benefit:	The proper economic choice of replacing lead and aromatics is necessary to meet environmental goals.		
Supplier:	Engineering design firm of appropriate background		

3. LONG TERM OPPORTUNITIES

Description	Cost	Pay-Off
Consolidate warehouse and inventory system. Results in better organization. By: Neftochim	To be determined	Indeterminant

140

K. ENVIRONMENTAL EMISSIONS REDUCTIONS

1. IMMEDIATE OPPORTUNITIES

There were no immediate minimum costs modifications observed that would allow immediate improvements in the environment.

Note that the refinery, typical of Western refineries, when budgets are limited, has spent its resources in metering, monitoring, and record keeping at the production units. Therefore, actual laboratory data of the status of any air, water, or solid waste discharge was limited to only the simplest of data required by the local regulatory agency. See Table I.1.3 for the water discharge limits and tests performed. No requirements were given for the air emissions or the solid wastes. The plant personnel were recently reorganized and data collection, current and future requirements, are being evaluated.

Due to the lack of data the following environmental recommendations are based upon visual observations of the various operating units. Also the estimated costs are best estimates based on experience and visual observations.

To determine best and most cost effective programs for environmental improvement will require extensive sampling and testing. It is estimated the three studies necessary to establish the cost effective environmental improvement program and the approximate cost is as follows:

1.	Wastewater	$ 150 000
2.	Oily Sludge	$ 100 000
3.	Air Pollution Control	$ 1 000 000 - 2 000 000

Liquid Stream Problems

The refinery is losing an excessive amount of oil to the Wastewater Treatment Plant (WWTP). The excess is coming from the desalters and heat exchangers.

The excess release from the desalter may be due to the lack of sensitivity or calibration of the desalter interface controller. A second possibility is the problem of balancing the flow through the five desalters without the help of flow meters. An in-depth study of each desalter must be completed to determine the actual reason for the release of excess oil. Concurrently, the plant may consider conducting flow tests using various polymers to enhance the sharpness of the oil / water interface.

The second major source of excess oil loss is from the various process heat exchangers. In the cooling tower recycle loops the amount of oil floating in the retention tanks or cooling tower sumps was excessive. This is probably due to ruptured tubes in the heat exchangers. The fact that the cooling loop has an oil separator in the return and the lack of actual measurements of the loss has

caused the operators to be lax in the observation of which heat exchangers should be repaired.

The solution to the two major sources of lost oil is two fold. The first is to educate the block operators as to their responsibility to prevent the loss of oil and subsequent water pollution. The workers and public are becoming more aware of the effects of pollution. Making the operators aware of the amount of pollution (loss of oil) that is occurring and giving maintenance support when the loss is observed and reported will reduce the oil load at the WWTP. This will also improve the throughput efficiency of the units.

One proven method of reducing the oil loss is to provide on-site oil / water separation at the block site. This allows for quick observation of the water flow and excess oil. Also, the local separator minimizes the necessity of returning separated oil from the central WWTP.

It is recommended the floating oil at the cooling tower separators and sump be removed continuously. With the oil layer observed during the visit, the operators do not have any good method of knowing the rate at which oil is being lost. By having a near clean water surface, the changes in oil removed will indicate progressive exchanger leaks and the occurrence of a major oil slick will indicate massive heat exchanger tube failure. The excess oil overflows into the recycle pumps and is pumped over to the cooling tower where it plugs the tower packing. Again, the oil accumulates in the cooling tower sump.

Separate sewer systems

The original plan for sewers was to have four sewer systems:

- Rain water from non-process areas
- Rain water from process areas
- Desalters at the crude units
- Alkaline / sulfuric water sewer (Chemical Sewer)

During the numerous developments and expansions, the separation of these sewers was not enforced. Hence, the waste water from the new block was dumped into the closest sewer regardless of the separation.

It was reported that certain sections of sewers collapsed and the water was re-routed to the closest sewer. Also due to the excessive loss of product, both at the refinery and petrochemical units, some sewers became plugged with solids from the process units or reaction products as various flows co-mingled in the sewers. When this occurred, the waste water was rerouted to the closest sewer.

Therefore, the existing intermingled sewer systems and surface drainage system must be investigated and the existing cross-connections identified and corrected. This will allow for specific and separate pre-treatment at the central WWTP. Barring this, effective waste water treatment is probably not at all, or at best, expensively and intermittently able to be achieved.

142

There is also a fairly severe problem source resulting from the fact that the existing collection sewers were constructed with joints using a low quality joint grout. The grout fails and allows ground water and sand to enter the system. Also, at surface water inlets, a direct connection is made to the sewer system. The inlets should be replaced with a sand settling compartment. Caution -- if these sand traps are installed, they must be inspected and cleaned as a routine project.

Flow equalization

The sewer systems as they enter the central WWTP are equipped with basins which were to act as flow equalization basins. The basins were undersized and do not act as flow equalization. In fact, they are creating a settling basin which allow the large particles of sand to settle and some free oil to float. These basins cause an additional operational maintenance problem because they frequently need cleaning.

Sand removal system

A cyclonic type concrete basin was installed between equalization tanks and the pump stations. The theory is the centralized flow will cause the sand to settle from the main flow and can be pumped to overhead hopper bottomed storage bins for dewatering and disposal. It was reported that the cyclones have never worked and no sand is being removed.

Oil separators

The wastewater from the cyclone sand separators flows through oil separators. The existing units are rectangular manually cleaned units. Because of the excessive oil and sand in the incoming wastewater, the basins soon become ineffective. Plant operations does not have enough people or equipment to keep these basins cleaned and operating. During the site visit, it was observed that a group of four basins were being equipped with traveling bridge type sludge / oil skimming devices. Work appeared to be progressing rather slowly. It was reported that the parts were slow in arriving and also construction personnel were limited.

If the installation of these automatic API type separators could be accelerated, some of the oil and sludge problems could be relieved. Without these API type units working, the mixture of oil / water / sand is well mixed at the pump station.

Pump station

The wastewater is raised to a higher elevation at the pump station. The station is equipped with screw type pumps. These pumps do a great job of aerating and mixing the oil, water and sand. Hence, the excess oil is partially oxidized and coated on the sand. The flow from the pump station is directed to any or all of four equalization tanks.

Equalization tanks

The four 12 000 m^3 tanks do offer an opportunity for the various sewer flows to mix and be equalized. Also, since the oil and sand have not been removed before the pump station, the free oil has an opportunity to separate and the now oil coated sand / sludge settles to the bottom. The basins are manually cleaned. The wastewater flows to the dissolved air floatation unit.

The free oil is pumped to an oil / water separator tank. The separator oil is pumped to the refinery for recycle. The water is returned to the WWTP.

The oily / sandy sludge is pumped to one of two 75 000 m^3 solid waste holding tanks. Both tanks are basically full. Some oil separation does occur and this oil is pumped to the refinery for recycling.

The oily / sandy sludge was to be processed through a rotary kiln incinerator. The incinerator was delayed in start-up.

Rotary kiln incinerator

The design of the rotary kiln considered the combustion of waste activated sludge, oily sludge and solid wastes. The two sludges are treated in thickeners and centrifuges. The centrifuges are used to separate oil and water from the two sludges. The water is returned to the WWTP, oil to the refinery and the thickened sludge to a blending / feed tank. The solid waste was to be fed from a hopper to an elevated chute feeding the rotary kiln.

The rotary kiln was designed to have castable fire proofing inside the kiln. The original castable material lasted only a couple of weeks. A new type of castable was recently installed. A test run has not been performed with this new castable because of the various start-up problems with the thickener / centrifuge / blending and feeding system. At the time of the site visit, the incinerator had only a 13 hour run when it had to be shut down.

The exit gas from the kiln flows through a heat recovery boiler. After the boiler, the cooled gas passes through a dust settling chamber and cyclone separator before the induced draft fan. The fan discharges to a stack.

The current regulations do not require any scrubbing system. The authorities have not certified the air pollution system because they have not operated in a steady state to allow sampling.

Dissolved air floatation (DAF)

The partially treated wastewater flows by gravity to the multiple DAF units. Due to the lack of spare parts for the scraper mechanisms, chemical feed pumps and the DAF float handling system, these systems were not operating effectively. Hence, all of the separation basins appeared to have a thick layer of oxidized oily sludge. The comment was made, they do not have any place to pump the oily

float / sludge so they just leave it there. The mix of water and oil flow from the DAF to the biological section of the WWTP.

Biological section

The biological section of the WWTP was designed to be a two stage oxidation system. From DAF treatment, wastewater flows to the first stage. The aeration is provided by platform supported turbine aerators. Recycled biological sludge is added to the wastewater flow before entering the first stage aeration unit. The outlet from the first stage flows to a circular clarifier to separate the activated sludge from the wastewater. Most of the settled sludge is recycled to the first stage unit. The excess sludge is pumped to the sludge lagoon for thickening.

The effluent from the first stage clarifier flows to the second stage aeration unit. The influent is mixed with recycled activated sludge from the second stage clarifier. Aeration in the second stage is provided by platform supported turbine aerators. After flowing through the second stage aeration unit, the waste-water flows to the second stage clarifier. The clarified wastewater is then pumped to the oxidation lakes near the Bay of Bourgas.

The aeration units of the WWTP are not capable of treating the influent wastewater because of two conditions:

- There is an excess of oil entering the aeration unit; and
- At any given time approximately 50% of the turbine aerators are out of service because of failed gear boxes.

Oxidation lakes

The partially treated wastewater is pumped to a series of oxidation lagoons (lakes) approximately 10 km away from the refinery site. The lagoons are located in marsh lands near the receiving stream. The receiving stream is the Aitoska River which discharges to the Bay of Bourgas, approximately three km from the outlet of the last oxidation lake.

Originally there were four lakes with an estimated retention time of 30-40 days. Currently, there are three lagoons operating with an approximate 22 days retention time. No dye tests or soundings have been made to confirm the retention time.

The old #1 lake is now being by-passed, backfilled and covered. Samples of the bottom sediment and sludge indicated the material is toxic. Therefore, the plant has chosen to backfill and cover the material in the lake to keep the water from resuspending the toxic material and carrying it to the Bay of Bourgas.

The current first lake -- old lake #2, is divided into two parts. The first part, approximately 1/3 of the lake, is covered with a thick oily mass. It appears to be biological sludge and oil. A floating boom contains most of the float. A floating boat skimmer removes the float and pumps it to a storage tank. The sludge from

the tank is blended with saw dust and sent to a state power plant. It was reported the mixture of saw dust / float has a BTU content about 4 000 BTU/lb., which is better than the brown coal the power plant is currently burning. The state power plant is currently running tests on the material. If the tests are satisfactory, it has planned to start blending the excess oily sludge currently stored in the various tanks and clarifiers throughout the refinery.

All units of the WWTP must be up-graded and made operable to allow the plant to meet the current standards.

Air Emission Problems

The fuel gas used in the various process heaters contain an excess of H_2S. Also, the fuel oil fired in the power plant contain an excess amount of sulfur.

The result of firing the fuels containing sulfur is a release of approximately 38 000 tonnes of SO_2/y. Flue gas desulfurization and sulfur plant tail gas treatment is recommended.

A second major air pollution problem requiring long term solution is the excessive amount of lost hydrocarbon. The plant has developed an estimate of these releases. The estimate was developed from a very limited sampling and without use of any standardized estimating method. The estimated hydrocarbon release is 237 000 tonnes/y.

The distribution of these losses are:

Tank Farms	65%
WWTP	25%
Leaks	6%
Cooling Towers	3%
General Loss	1%

Therefore, a major effort should be directed at confirming the losses at the tank farms. If confirmed, a program of emission reduction can be developed. The plan should allow for providing:

- Dome roof for tanks
- Vent conservation valves
- Vent condensers - individual - either
  - cooling water
  - refrigerated
- Vent collection system
  - condensing
  - flaring

Other Subtle but Damaging Problems

A final long term environmental control system should be established when funds become available. There is a significant potential of ground water pollution. Considering the location of the complex near the Bay of Bourgas, the probable groundwater flow is toward the bay. Areas of suspected groundwater contamination should be investigated.

The first area recommended to be investigated is the area around the old oxidation lake number #1. It is currently being by-passed, back filled and covered because of the toxic substances in the sludges contained in the lagoon. As a minimum, a pizometric * study should be conducted to confirm the direction and rate of groundwater. After the direction and rate of flow is confirmed, groundwater sampling wells should be installed the ground water sampled, and analyzed on a quarterly basis.

If migration of toxic substances are observed, corrective action must be taken before the toxic material reaches any river or the Bay of Bourgas. Corrective action could be removal of the source of pollutants, ground water containment or ground water pump / treat systems.

The second area of concern is the plant site itself. All the refineries that have investigated the ground water under their plants have found polluted ground water. The amount of pollution varies from refinery to refinery. The amount of pollution found has varied from traces of hydrocarbons in the ground water to a discrete layer of hydrocarbon material on top of the water table. The method of investigation is the same as stated for lagoon #1. This is to confirm the direction of ground water flow and install ground water sampling wells.

Costings

It is estimated at present that on typical U.S. industry expenditures for solutions to the probable problems listed above, that after the proper studies, data gathering, monitoring investments and efforts listed in the introduction to this Section K - remediation and control investments would likely total well over $ 50 million. This figure is large enough, and the consequences of doing nothing sufficiently damaging to the refinery's future economic viability, let alone "social permission to operate", that the initial prevention efforts should be undertaken.

* Pizometric study involves determination of ground water levels for a period of time. The water levels in turn establish the direction of water flow.

K. ENVIRONMENTAL EMMISSIONS REDUCTIONS

1. IMMEDIATE OPPORTUNITIES

Description	Cost	Pay-Off
Portable volatile organic compound (VOC) analyzer will allow the plant to identify areas and equipment with high product loss. These data accumulated from a refinery VOC survey will allow the plant to establish a program of VOC control based upon fact	$12 000	The savings will be in the prevention of product leaks and loss. The instrument will pay for its self if the identified losses are corrected as they are identified.

1. IMMEDIATE OPPORTUNITIES

Description	Cost	Pay-Off
Pollution source study to evaluate the process blocks for pollution contribution and the sewer systems delivering the wastewater to the treatment plant.	Not less than $70 000	The identification of the major sources of pollution load. A waste reduction plan can then be developed.

2. MEDIUM TERM OPPORTUNITIES

Description	Cost	Pay-Off
Revamp the oil / water interface control of the desalters to the control loss of oil.	Not less than $15 000 each	Reduce the amount of oil released to the sewer by about 200 000 tonnes/y

2. MEDIUM TERM OPPORTUNITIES

Description	Cost	Pay-Off
Install 10 belt oil skimmers in the cooling tower return basins / sumps.	Not less than $10 000 each	Minimize the oil carry-over to the cooling towers. Recover about 100 tonnes / day of oil

2. MEDIUM TERM OPPORTUNITIES

Description	Cost	Pay-Off
The refinery has 5 - two compartment API separators requiring manual cleaning. The plant is currently installing mechanical equipment in one two compartment unit. Install in the other three two compartment mechanical unit.	Not less than $300 000 (Total)	Prevent the carry-over of sludge / oil to the equalization basins. Improve the recovery of oil to recycle to the slop tank

2. MEDIUM TERM OPPORTUNITIES

Description	Cost	Pay-Off
Revamp the existing 6 non-operating dissolved air flotation units and add covers.	Not less than $250 000	Allow for the DAF to remove oil before the activated sludge unit and the oxidation lakes. Recover about 9 000 tonnes of oil per day.

3. LONG TERM OPPORTUNITIES

Description	Cost	Pay-Off
The three sewers have been inter-connected as an expendiance. Sewers should be separated - storm water, refinery wastewater and petrochem waste water. The waste reduction study recommended will identify which sewers and where they are inter-connected. Actual costs are unknown	Not less than $1 000 000	Reduce the hydraulic loading on the WWWTP's for the both refinery and petrochem. Also could reduce the amount of sand in the waste water

3. LONG TERM OPPORTUNITIES

Description	Cost	Pay-Off
Excavate, blend, stabilize and bury 400 000 cubic meters of oil sludge currently being stored in some of the wastewater treatment units.	Not less than $50 000 000	Safely dispose of the hazardous oil and sludge. Return the many wastewater treatment tanks to their full operating capacity and prevent additional oil loss to the river.

3. LONG TERM OPPORTUNITIES

Description	Cost	Pay-Off
The first and second stage activated sludge tanks of the wastewater treatment plant has 192 fixed platform type of turbine aerators. The quality of the existing gear boxes are such the plant cannot keep up with the maintenance. There are typically 50% of the aerators operating at anytime. 194 new gear boxes.	Not less than $4 500 000	The first savings will be in maintenance cost. The second saving is to provide the plant with reliable equipment which will provide the appropriate amount of oxygen capacity for the activated sludge process. This will allow the plant to meet the effluent standards.

3. LONG TERM OPPORTUNITIES

Description	Cost	Pay-Off
Determine the extent of groundwater pollution and direction of the plume flow pattern.	Not less than $100 000	Identify the amount and location of the groundwater pollution. The groundwater cleanup system can not be designed or estimated until the test work is completed. Prevent contamination of the additional groundwater.

3. LONG TERM OPPORTUNITIES

Description	Cost	Pay-Off
Old aeration lake #1 needs to have the bottom sludges tested and maybe stabilized. Test for the groundwater contamination and flow pattern. 50 wells 50 samples If the lab results of the sludge samples show leachables and require treatment, the estimated amount of treatment is 68000 m^3.	Not less than $13 000 000	Prevent the contamination of Bourgas Bay from the groundwater flowing through the deposited sludge.

APPENDIX A. SUPPORTING PLANT DATA

Following tables provide major product specifications:

Table	Product
AP-A.1	GASOLINES
AP-A.2	JET FUELS
AP-A.3	DIESEL FUEL
AP-A.4	FUEL OILS

TABLE AP-A.1 - GASOLINES PRODUCT SPECIFICATIONS

DESCRIPTION	A-86	A-93	A-96	A-93H
Research Octane	86	93	96	93
Motor Octane	76	83	84	83
Total Lead, g/kg (not more than)	0.15	0.15	0.15	0.006 g/dm³
Density @ 20 °C, g/cm³ (not less than)	0.700	0.700	0.700	0.720
Distillation,				
IBP (not lower than)				
summer	32	32	32	32
spring/fall	30	30	30	30
winter	no limit	no limit	no limit	no limit
10% (not higher than)	70	70	70	70
50% (not higher than)				
summer	115	115	115	115
spring/fall	115	115	115	115
winter	110	110	110	110
90% (not higher than)	180	180	180	180
EP (not higher than)	205	205	205	205
Residue in Flask, wt%	1.5	1.5	1.5	1.5
Residue + Losses, wt%	3.5	3.5	3.5	3.5
Sulfur vol % (not more than)	0.05	0.05	0.05	0.05
Lower Heat of Combustion, MJ/kg (not less than)	-	-	-	44
Induction Period, minutes (not less than)	600	600	480	600
Acidity, mg KOH/100 cm³ product (not more than)	3	3	3	3
Mechanical Impurities and Water	none	none	none	none
Water Soluble Acids	none	none	none	none
Copper Strip Corrosion	OK	OK	OK	OK
Saturated Vapor Pressure, kPa (not more than)				
summer	66.7	60	60	60
spring/fall	66.7	66.7	66.7	66.7
winter	86.7	80	80	80

TABLE AP-A.2 - JET FUEL PRODUCT SPECIFICATIONS

DESCRIPTION	T-1	TC-1	T-2	RT
Density @ 20°C (not less than), g/cm^3	0.800	0.775	0.755	0.775
Distillation °C IBP	≤ 150	≤ 150	≥ 60	≥ 135
10% (not higher than)	175	165	145	175
50%	225	195	195	225
90%	270	230	250	270
98%	280	250	280	280
Kinematic Visc. @ 20 °C mm^2/sec (not less than)	1.50	1.25	1.05	1.25
@-40 °C mm^2/sec (not more than)	16	8	6	16
Lower Heat of Combustion, MJ/kg (not less than)	42.90	42.90	43.10	43.12
Smokeless Flame Temperature, °C (not less than)	20	25	25	25
Acidity, mg KOH/100 cm^3 (not less than)	0.7	0.7	0.7	0.4-0.7
Saturated Vapor Pressure, kPa	no limit		13.3	
Flash Point, °C (not less than)	30	28		28
Freeze Point, °C (not higher than)	-60	-60	-60	-55
Iodine No., g/100 g product (not more than)	2	3.5	3.5	0.5
Aromatics % (not more than)	20	22	22	22
Actual Resins, mg/100 g fuel (not more than)	6	5	5	4
Sulfur % (not more than)	0.1	0.25	0.25	0.1
H_2S	none			
Mercaptan Sulfur % (not more than)	-	0.005	0.005	0.001
Copper Strip Corrosion	OK	OK	OK	OK
Ash % (not more than)	0.003	0.003	0.003	0.003

TABLE AP-A.3 - DIESEL FUEL PRODUCT SPECIFICATIONS

DESCRIPTION	SUMMER	SPRING/FALL	WINTER
Density @ 20 °C, g/cm^3	no specification	no specification	no specification
Cetane No. (not less than)	45	45	45
Cetane Index (not less than)	45	45	45
Distillation °C (not higher than) 50% 90% 95%	 300 360 -	 300 360 -	 280 345 360
Kinematic Viscosity @ 20 °C, mm^2/sec	2.5 - 8.0	2.5 - 8.0	2.5 - 8.0
Acidity mg KOH/100 cm^3 (not more than)	5.0	5.0	5.0
Ash % (not more than)	0.02	0.02	0.02
Sulfur % (not more than) Group I Group II	 0.20 0.30	 0.20 0.30	 0.20 0.30
H_2S Test	none	none	none

TABLE AP-A.4 - FUEL OIL PRODUCT SPECIFICATION

DESCRIPTION	MEDIUM FUEL OIL	HEAVY FUEL OIL
Kinematic Viscosity @ 80 °C, mm^2/sec (not more than)	59	115
"Engler" Viscosity, °E	8	15
Ash % (not more than)	0.10	0.14
Sulfur % (not more than) Lower Content Higher Content	 1.0 3.5	 1.0 3.5
Water Soluble Acids and Alkalines	-	-
Water and Sediment % (not more than)	1.0	1.0
Fluidity Temperature, °C (not higher than)	-	-
Freeze Point, °C (not higher than)	25	25
Flash Point, °C (not lower than)	90	110
Lower Heat of Combustion, MJ/kg (not lower than)	40.2	39.8
Density @ 20 °C, g/cm^3 (not more than)	-	1.015

Appendix B

CHARACTERIZATION REPORT - NEFTOCHIM REFINERY, BOURGAS, BULGARIA

1. NEFTOCHIM REFINERY WORKS - BOURGAS, BULGARIA

This petroleum processing complex is located near the shore of the Black Sea, about 12 kilometers from the Bourgas port.

Address:	Neftochim 8104 Neftochim Bourgas Bulgaria
Telephone:	359 56 24861
Telex:	83506, 83576
Telefax:	359 56 24966
Contact:	H. Hadjikolev

1.1 Summary Description of Refinery

The Neftochim Complex is an enormous facility consisting of a Central Power Generation Plant, Utilities Generation Units, Refinery Process Units, Petrochemical Complex, feedstock/product storage and loading facilities, and other ancillaries associated with a complex of this type. The refinery process units constitute only a fractional portion of this facility. A Block Flow Diagram of the refinery portion of the complex is attached as Figure No. 1.

The crude oil processing "nameplate" capacity of this refinery is 11.0 million tonnes per year. By some reports, the refinery has a capacity of 12.0 million tonnes per year, although with some minor debottlenecking revamps the overall processing capability may have been increased to 14.0 million tonnes per year. The crude feedstock is received by ship at Drouzba (near Bourgas). No crude is received via pipeline. The crude types normally processed in the past were split as follows:

Soviet Export Blend	60 %
Iraqi	20 %
Miscellaneous	20 %

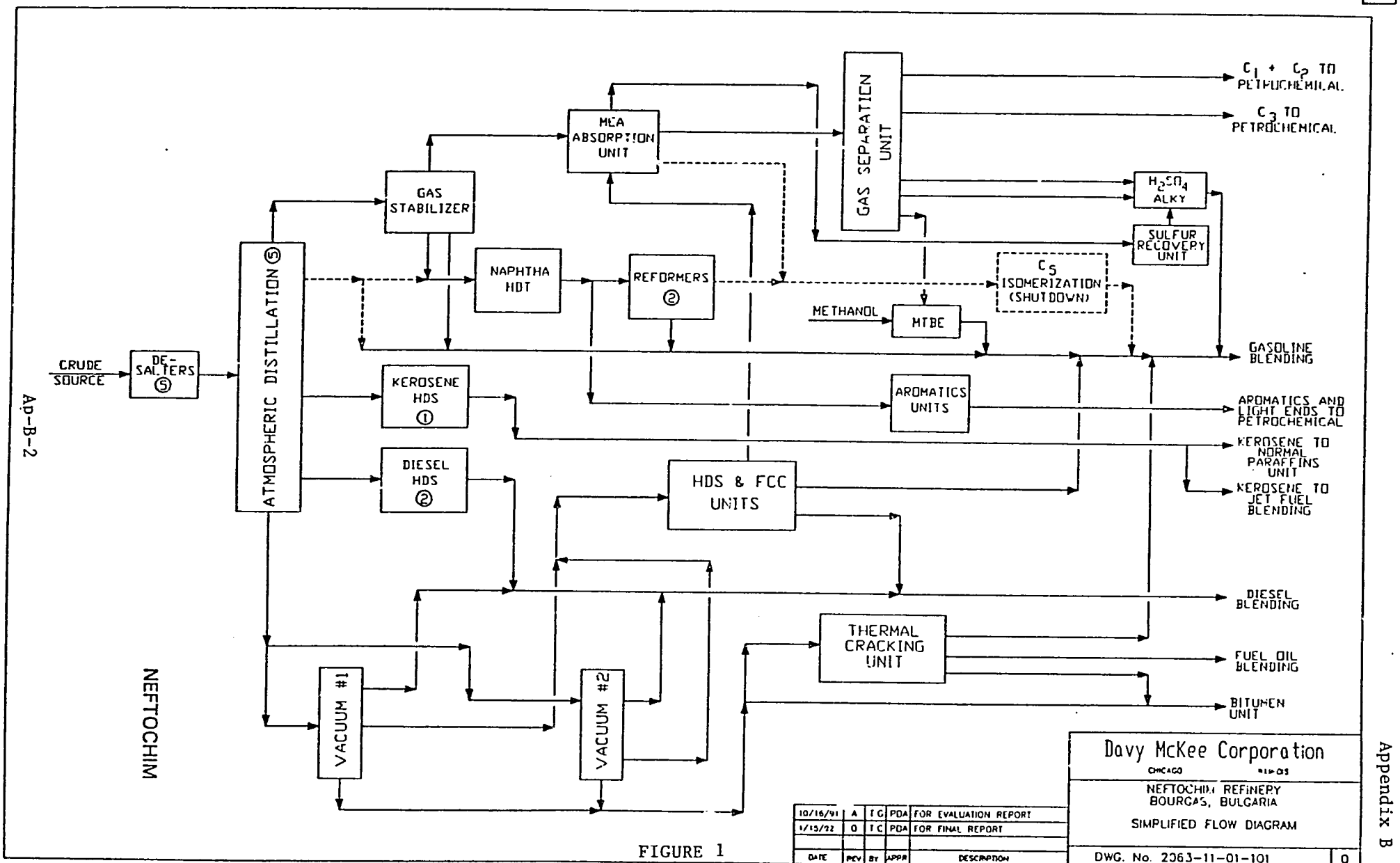
CRUDE SOURCE
DE-SALTERS ⑤
ATMOSPHERIC DISTILLATION ⑤
GAS STABILIZER
MEA ABSORPTION UNIT
GAS SEPARATION UNIT
NAPHTHA HDT
REFORMERS ②
KEROSENE HDS ①
DIESEL HDS ②
HDS & FCC UNITS
VACUUM #1
VACUUM #2
THERMAL CRACKING UNIT
METHANOL
MTBE
C_5 ISOMERIZATION (SHUTDOWN)
H_2SO_4 ALKY
SULFUR RECOVERY UNIT
AROMATICS UNITS
C_1 + C_2 TO PETROCHEMICAL
C_3 TO PETROCHEMICAL
GASOLINE BLENDING
AROMATICS AND LIGHT ENDS TO PETROCHEMICAL
KEROSENE TO NORMAL PARAFFINS UNIT
KEROSENE TO JET FUEL BLENDING
DIESEL BLENDING
FUEL OIL BLENDING
BITUMEN UNIT
NEFTOCHIM
Davy McKee Corporation
CHICAGO
NEFTOCHIM REFINERY
BOURGAS, BULGARIA
SIMPLIFIED FLOW DIAGRAM
DWG. No. 2063-11-01-101
0
10/16/91 A TG PDA FOR EVALUATION REPORT
1/15/92 0 TC PDA FOR FINAL REPORT
DATE REV BY APPR DESCRIPTION

FIGURE 1

The table C.1.1.1 indicates the various process units in the refinery along with the year installed and the licensor's name.

TABLE C.1.1.1 - HISTORY OF NEFTOCHIM REFINERY UNITS

TITLE	CAPACITY tonnes/y	DATE INSTALLED	CONTRACTOR	LICENSOR
AD-1	1.5×10^6	1963	USSR	USSR
AD-2	1.5×10^6	1963	USSR	USSR
AD-3	3 million	1969	USSR	USSR
AD-4	3 million	1973	USSR	USSR
AD-5	3 million	1974	USSR	USSR
Cat Reforming 1	300 000	1964	USSR	USSR
Cat Reforming 2	300 000	1970	USSR	USSR
Hydrotreating 1	300 000	1964	USSR	USSR
Hydrotreating 2	500 000	1970	USSR	USSR
Hydrotreating 3	600 000	1975	USSR	USSR
Vacuum Distill. 1	1.68 million	1974	USSR	USSR
Vacuum Distill. 2	2 million	1982	USSR	USSR
FCC	1.5 million	1982	USSR	USSR
Visbreaking (Thermal cracking)	1.5 million	1982	USSR	USSR
Alkylation	215 000	1982	USSR	USSR
H_2SO_4	280 000	1983	USSR	USSR
Gas Fractionation	280 000	1983	USSR	USSR
MTBE	80 000	1988	Bulgaria	Huels
Merox	-	1991	-	UOP

The table C.1.1.2 shows the overall material balance as reported by the refinery management for the year 1990.

C.1.1.2 - OVERALL MATERIAL BALANCE (1990)

	TONNES/YEAR	%
INPUTS		
CRUDE OIL	7 355 000	99.45
METHANOL	41 000	0.55
SUBTOTAL	7 396 000	100.00
OUTPUTS		
GAS	15 000	0.20
LPG	77 000	1.04
VIRGIN NAPHTHA	834 000	11.28
AUTOMOTIVE GASOLINES	1 126 000	15.22
JET FUEL	203 000	2.74
MOTOR DIESEL FUEL	1 658 000	22.42
INDUSTRIAL DIESEL FUEL	803 000	10.86
FUEL OIL	2 434 000	32.92
MARINE OIL	75 000	1.01
LIQUID PARAFFINS	24 000	0.32
BITUMEN	128 000	1.73
SULFUR	14 000	0.19
LOSSES *	5 000	0.07
SUBTOTAL	7 396 000	100.00

* Typical losses are reported to be around 1.0%.

The major refinery processing units are described below:

Crude distillation units

There are five (5) atmospheric distillation units, each with their own desalters, crude heat exchanger trains, fired heaters, strippers, and associated equipment. Recent operations have primarily utilized the newest units (AD-4 & AD-5) since insufficient crude supplies have been available to permit continuous operation of the other distillation units. Atmospheric Distillation Units AD-4 & AD-5 include naphtha stripping and naphtha splitting columns. The light naphtha is routed directly to gasoline blending; the heavy naphtha is further processed in the catalytic reforming units.

The complex also contains two vacuum distillation units processing the atmospheric residue and providing feeds to the Thermal Cracking, Fluid Catalytic Cracking, and Bitumen Units.

Light ends processing units

Included in this category are the Gas Desulfurization (with MEA washing), and Gas Separation Units. The light gases produced in the various process units are initially desulfurized and subsequently fractionated to produce a variety of petrochemical feedstocks (C1,C2, and C3) and feeds to the Sulfuric Acid Alkylation and MTBE Units.

The sour H_2S containing gases from the Gas Desulfurization unit constitute the feed to the Sulfur Recovery Unit.

Naphtha processing

The majority of the straight-run light naphtha product separated in the Atmospheric Distillation Units is sent directly to the gasoline pool. A portion of this material may be processed in the Light Naphtha Isomerization Unit, but this unit was shutdown during the period of the team visit. A small portion of the straight-run naphtha is sent to the petrochemical plant.

The heavy naphtha fraction is hydrotreated in two Naphtha Hydrotreating Units. The resulting material is then further octane upgraded in the two semi-regen. Catalytic Reforming Units within the refinery. A portion of the hydrotreated naphtha is sent to the Petrochemical Section of the Complex for further processing to specialty chemicals.

Distillate processing

There are three distillate hydrotreating units within the refinery - one processes the jet fuel / kerosene fractions and the other two process the diesel fractions from the atmospheric distillation units.

Gas oil conversion

The vacuum gas oil (VGO) fractions separated in the vacuum distillation units are routed through the hydrodesulfurization (HDS) / Fluid Catalytic Cracking Units for upgrading to more valuable end products. The VGO feedstock to the FCC Unit is pretreated in a HDS unit immediately upstream of the FCCU. This HDS unit treatment improves the feed properties to the FCC Unit such that better overall yields and product properties result. The Fluid Catalytic Cracking Unit appears to be the most important process unit within the refinery as it is by far the largest gasoline producer. It is capable of producing 90+ octane gasoline at a yield of over 50 percent. The FCC Unit light gas byproduct is eventually processed in the Sulfuric Acid Alkylation Unit.

Residual processing units

A visbreaking unit (thermal cracker) is utilized to upgrade the residual material separated in the Vacuum Fractionation Units. The cracked fractions are routed to gasoline, kerosene, diesel, and fuel oil storage as applicable. The heaviest material is further processed in the Bitumen Unit to produce an asphaltic product.

Hydrogen production unit

A single Hydrogen Production Unit is operational on the refinery site. This unit presumably provides the high purity hydrogen requirements for some of the petrochemical process units.

Sulfur recovery unit

One Claus-type Sulfur Recovery Unit is on the premises.

1.2. Utilities, Services, Offsites

Water systems

The refinery process raw water is obtained from a man-made lake, Lake Manda, about 7 kilometers from the refinery. The wastewater after treatment is returned below the dam and discharges into the Bay of Bourgas. Drinking and sanitary water (116 cubic meters/h) comes from the City of Bourgas' water facilities. Total water use in the complex is about 8 000 cubic meters/h:

Boiler Feed Water	1 300 cubic meters/h
Cooling Tower	5 000 cubic meters/h
Process Water (softened)	500 cubic meters/h
Wash Water, Fire Water and Losses	1 200 cubic meters/h

The refinery utilizes a circulating cooling water system. The cooling towers are equipped with wooden packing that is in poor condition. The refinery is considering replacement of the packing with polypropylene grids. At the time of the evaluation, the cooling towers were not operating efficiently.

Electric power

The plant obtains electricity from two independent sources:

(1) Bourgas substation is connected through two 110 kV overhead lines. This substation is connected to the 400 Kv State Electric Power System. This substation is connected to the plant and on Neftochim plant property.

(2) Thermal Power Station (TEZ) owned by Neftochim provided by six generators driven by steam turbines.

Electric power distribution within the refinery is as follows:

Motors 200 Kw and above are supplied at 6000 Volts/ 3 phase/ 50 Hz.

Motors up to 200 Kw are supplied at 380 Volts/ 3 phase/ 50 Hz systems.

Lighting is 220 Volts/ single phase/ 50 Hz. Dangerous area lighting is 12, 24 or 36 volts. Emergency lighting (DC) is from storage batteries.

Instrumentation and repair tools use 220 Volts / single phase.

Steam system

Steam for the entire refinery and petrochemical complex is generated in a Central Power Station and routed to all process consumers. A total of 11 Soviet designed and built boilers produce steam at pressure levels of 140 and 100 bars. This steam is let down through the turbo-generators to produce 40, 20, 15, and 10 bar steam for distribution. Steam is also available at the units at 1.5 and 0.6 bars. Only about 20% of the steam from the generating source is returned to the to the power station.

Fuel system

In general the fuel used to fire the refinery heaters is a combination of gas and oil. The fuel gas is a mixture of light refinery process gases and imported natural gas. The blend averages about: 19% H_2, 73.8% CH_4, the remainder C_2+.

The fuel oil is predominantly the unconverted heavy material processed in the refinery and has a sulfur content that varies between 1.0 and 3.5%.

Instrument and plant air

The instrument and plant air are available at a pressure of 4.0 kg/cm^{2}g.

The dew point of instrument air is -25 °C (summer) and -35 °C (winter).

Inert gas

Nitrogen is supplied at a purity of 99.9% produced by an on-site air liquefaction unit.

Storage tanks

A complete assessment and inventory of the tankage situation at this refinery / petrochemical complex was not undertaken. It was noted that the crude storage available on the plant site was as underground tanks. Based upon the refinery rated processing capacity of 14 million tonnes per annum of crude feed, the crude tanks afford less than 7 days storage capacity. The crude storage tanks were not equipped with mixers. Unfortunately, the refiner was having such difficulty obtaining crude supplies that at times the feedstock to the refinery was offloaded from ships and sent directly to the atmospheric distillation columns. Most, if not all, of the tankage appeared to be unblanketed. It was stated that the refinery had no installations of secondary sealing. The condition of the tankage is unknown.

Flare and knockout system

The primary refinery flare stack is 47 meters high and has a burner tip diameter of 800 mm. The flare knockout drum is sized at 30 cubic meters.

Fire fighting system

The refinery utilizes a common fire water system for all the process units. The header pressure is approximately 4.5 barg. Emergency firewater pumps can raise the header pressure to 10 barg. Hydrants and jet sprays are distributed throughout the process areas.

1.3 Chemicals and Catalysts Use

The information was provided by the refinery. However, it is not reported here, since the refinery management considers the catalysts and chemicals consumption to be confidential.

1.4 Previous 12-month Operating History

1.4.1 Recent Modifications

The refinery is in the process of revamping the FCC Unit to maximize production of high octane gasoline production.

1.4.2 Crude Oil Supply

In the recent past, the two primary crude oil suppliers were the Soviets (over 60 %) and the Iraqis (approximately 20 %). Iranians and other Middle Eastern entities contributed to the balance of the supply. Political, social, and/or economic problems related to the two primary suppliers have left the Bulgarians in an extremely vulnerable position with respect to obtaining sufficient crude to efficiently operate the refinery and petrochemical complex. At the time of the evaluation, the refinery complex was operating significantly below its rated capacity (approx. 33 % of rated throughput). Several of the process units were shutdown, and most of the others were operated at significant turndown ratios.

The typical properties of various crude oils and the distribution and key properties of products derived from them are shown in Table C.1.4.1.

TABLE C.1.4.1

NEFTOCHIM CRUDE OIL AND PRODUCT PROPERTIES

Crude Name Source (Country)		URAL (Sea) USSR	IRANIAN HEAVY	IRANIAN LIGHT
Crude Feedstock				
	API Gravity	33.5	31.5	33.8
	Sulfur, Wt. %	1.18	1.79	1.46
	Pour Point, °F	-9	-12	-15
	Viscosity, Cst at 130°F	5.89	8.2	5.71
C4- Fraction	Yield, Vol. %	2.5	2.1	2.4
Gasoline	C5-70 °C			
	Yield, Vol. %	7.6	4.6	5.8
	API Gravity	85.9	81.9	81.9
	Sulfur, ppmw	200	500	250
	Octane, F-1, 1.5 ml TEL	69	79.2	79.2
Naphtha	75-170 °C			
	Yield, Vol. %	18.2	16.3	17.4
	API Gravity	56.2	57.7	57.4
	Sulfur, ppmw	1424	997	445
Kerosine	170-230 °C			
	Yield, Vol. %	12.7	10.4	10.7
	API Gravity	46.7	45.2	49.5
	Sulfur, Wt. %	0.23	0.32	0.12
Light Gas Oil	230-300 °C			
	Yield, Vol. %	13.2	12.1	12.7
	API Gravity	38.2	37.0	37.4
	Sulfur, Wt. %	0.55	0.73	0.41
	Viscosity, Cst at 50°C	3.59	7.40	4.20
Vacuum Gas Oil				
	Yield, Vol%	20.3	13.1	15.7
Heavy Gas Oil	300-315 °C			
	Yield, Vol. %	12.8	11.4	10.0
	API Gravity	30.6	30.6	31.3
	Sulfur, Wt. %	1.43	1.74	1.28
	Visc. @ 50 °C	6.98	7.40	6.34
	Cloud point °C	10	7	11
	Cetane Index	59.5	54.6	61.9
Vacuum Residue				
	Yield, Vol %	12.7	30.0	24.3
	API Gravity	11	10.6	10.7
	Sulfur, Wt. %	3.66	3.41	2.71
	Visc. 100 °C	144.1	221.4	149.1
	Vanadium, ppmw	16	226	12.4
	Asphaltene, ppmw	0.4	4.0	2.5

NEFTOCHIM

1.4.3. Operating Experiences

During the DMC team visit, the thermalcracker was shutdown for maintenance. The Light Naphtha Isomerization Unit and the FCCU Waste Heat Recovery System (CO Boiler) were also shutdown.

Due to shortage in crude oil supply only two of the five Atmospheric Distillation Units were operating. One of the Naphtha Reforming Units and one of the Distillate Hydrotreaters were also shutdown. During the year 1990 only 7.4 million tonnes of crude oil were processed. This is just over 50% of the rated capacity of the refinery. Initial projections indicate that the total crude processed in 1991 would approximate 5.0 million tonnes.

Tables C.1.4.2. lists scheduled and unscheduled down time for each unit in the refinery in 1990.

NEFTOCHIM OPERATING UNIT
TABLE 1.4.2 - SHUTDOWNS IN 1990 (Hours)

UNIT	TOTAL DOWN TIME	SCHEDULED SHUTDOWN			NON-SCHEDULED SHUTDOWNS	
		Planned	Actual	Feedstock Shortage	Chemicals	Other
AD-1	3 913	720	720	3 193	-	-
AD-2	4 096	720	874	3 170	-	52
AD-3	4304	720	624	3 368	-	-
AD-4	1 114	720	862	252	-	-
AD-5	2 263		2 263		-	-
HD-1	4 284	576		3 404	880	-
HD-2	2 006	576	514	1 092	-	400
HD-3	2 977	576	816	1 976	185	-
CR-1	2 943	720	576	2 376	-	-
CR-2	4 744	624	1 632	2 208	44	-
HYDROGEN	788	768	792	470	44	-
Vacuum Dist.	1 306	768	816	494	136	-
FCC	812	768	792		20	-

There were no shutdowns attributed by the plant reports to problems arising in

electrical, steam, cooling water, plant or instrument air supplies, or to any incidents within the process units.

1.4.4. Impact of Crude Oil Changes

Design vs. actual crude distillation products are presented below in Table 1.4.3.

TABLE C.1.4.3 - NEFTOCHIM CRUDE DISTILLATION PRODUCTS

Product	Design wt %	1989 (Actual) wt %	1990 (Actual) wt %	1991 (Projected) wt %
Light Gases	1.7	2.6	2.2	2.0
Naphtha	17.0	15.5	14.3	15.5
Kerosene	17.0	6.0	3.5	2.7
Gas Oils	18.5	30.2	29.4	27.1
Resid	44.8	45.1	49.3	50.6
Losses	1.0	0.6	1.3	2.0

From the above table it is apparent that the crude feedstock to the refinery complex has become progressively heavier over the past several years. The crudes that are currently processed also contain higher concentrations of sulfur. They are significantly heavier than the design parameters of the Atmospheric Distillation Units and presumably, the downstream processing units. The higher atmospheric gas oil plus resid concentrations (compared to the design values) could conceivably bottleneck the processing capacities of the lower sections of the atmospheric distillation columns and the units designed to process the heavy crude oil fractions (e.g. Vacuum Distillation, Thermal Cracking, FCC, Diesel Hydrotreating, and Bitumen Units). The higher feedstock sulfur concentration could affect the operation of the Sulfur Recovery Unit. Additionally, it is possible that the current sulfur concentrations could adversely impact the metallurgy of the bottoms processing units. The higher than design sulfur concentrations could result in unacceptable corrosion rates.

The best way to evaluate the processing impact of new feedstocks and/or operating conditions on an existing crude unit is to simulate the unit under existing operating conditions and establish capacities, limitations and bottlenecks to the actual equipment. Then through further simulation, the expected operating conditions, products rate, pumparound duties, flash zone conditions, crude heater duty, crude column tray loadings, and capacities of the downstream process units and/or equipment can be determined. All this is readily done by using currently available process simulation software and appropriate high speed computers.

1.4.5 Impact of Product Market Changes

At present, the refinery production is oriented only toward the domestic market. Some of the petrochemical products do compete in the foreign market. Any future development of a free market economy and potential privatization the refinery will have a profound impact on the operation of this complex. Refinery products will have to compete with imported products, both in terms of quality and value.

It is expected that increased production of a higher octane gasoline product will become necessary. Additionally, lead phase-down and benzene reduction in gasoline will eventually become a reality. Neftochim currently is not in a position to produce significant quantities of high octane gasoline.

Changes to the diesel fuel product market may dictate similar product property improvements. Reduction in aromatics and sulfur concentrations are to be expected. Of these, sulfur is probably the most severe and first likely to receive attention. Aromatics will certainly follow but initially could be expected to impact primarily on the "external" salability of the Bulgarian products. This could severely impact the Distillate Hydrotreating Unit capabilities as the most recently processed feedstocks contain higher sulfur concentrations than the units were designed for.

1.4.6. Impact of Legislation and Social Changes

The potential legislated and social changes could profoundly affect the operation and/or competitive position of this refinery both in the immediate and longer term future. Legislated changes could include:

1. Initially reduction and eventually complete elimination of lead additives to improve octane ratings of the gasoline pool.
2. Reduction of aromatics concentration of the gasoline pool.
3. Reduction of both sulfur and aromatics allowed in the diesel fuel product.

4. Environmental pollutant reductions to prescribed limits. These could be either concentration of total mass over a time period with a peak rate. These would include volatile organic compounds (VOC's), sulfur, and particulates to the air, along with specific toxic materials in the refinery water system.
5. Groundwater testing around the refinery and petrochemical complex to monitor any potential toxic emissions to the water table.

Given the condition of the refinery waste collection and treatment systems, it is almost certain that significant capital expenditures will be necessary to bring the refinery into compliance with future local regulations noted above. The only question unanswered to date and also in this report is how large will the investment need to be and how long a time is available for improvement.

Potential social changes could include:

1. Bulgarian movement to a free market economy.
2. Privatization of the state-owned refining industry.
3. Increased domestic consumption of petroleum products in line with other European countries (particularly gasoline).

Legislated and social changes to the refining industry are potentially the most serious problems that the Bulgarians could face.

1.5 Environmental Considerations

1.5.1. Quality of Local Environment

Air emissions

The refinery has developed the following preliminary estimate of the facility emissions.

Table C.1.5.1
NEFTOCHIM FACILITY AIR EMISSIONS

Emission	tonnes/y
Hydrogen Sulfide	200
Carbon Monoxide	13 000
NO_x	6 000
SO_x	38 000
Hydrocarbons: Saturated	186 600
Unsaturated	37 000
Aromatic	7 000
Miscellaneous	6 000

By 1995, the plant plans to reduce the above air emissions by 40-50 %. The relatively flat land adjacent to the Black Sea allows for good ventilation due to the normal air velocity changes. In certain meteorological conditions, the refinery air emissions flow toward populated areas and have caused complaints.

Water quality

Currently, the treated wastewater from the refinery does not meet the standards set forth in the state Decree No. 8, as shown in Table C.1.5.2 below:

Table C.1.5.2
NEFTOCHIM WASTEWATER EFFLUENT CHARACTERISTICS

Property	No. 8 Stds.	WWTP Outlet	3rd Lake Outlet
BOD, mg/liter	< 5	150 - 400	60 - 70
COD, mg/liter	< 25	300 - 800	170 - 300
Oil, mg/liter	< .05	20 - 50	5 - 12
Ph	6 - 9	7 - 9	6.5 - 7.5
Total Suspended Solids, mg/liter	N.A.	40 - 60	25 - 40

The wastewater, after partial treatment, discharges through a marshlands area. With the additional treatment afforded through the wetlands and the multiple outlets from the wetlands, the impact of the refinery effluent is not causing significant environmental problems.

During the time of the environmental audit of the refinery, it was publicly announced that bathers could not swim at the Bourgas public beaches due to the bacterial count in the water. The source of the high bacteria count was not stated.

Solid wastes

The plant has two separate solid waste systems. The first is the normal solid waste generated by the production facilities in terms of scrap paper, wood, construction debris and office material. This material is presumably sent to landfill disposal.

The second solid waste system - the oily sludge disposal system - presents the more pressing solid waste problem. At the time of the evaluation, the oily sludge was simply being stored in various tanks and basins throughout the facility. The oily sludge volume is estimated to be about 400 000 cubic meters.

1.5.2. Current Emissions Controls

There are no specific air pollution control standards currently in effect. It is anticipated that future local regulations will force the plant to control the SO_2, particulate, and volatile organic emissions within the next few years.

As stated in section I.5.1., the wastewater quality as it leaves the final clarifier or the third lagoon does not meet the Decree #8 standards. The Wastewater Treatment Plant basic design as originally installed has the potential to meet the standards. Two actions are required to achieve compliance, namely: (1) stop the uncontrolled oil loss to the sewer system, and (2) repair and/or replace the non-functional components of the major wastewater treatment units.

The disposal of hazardous solid wastes are currently uncontrolled. A new rotary kiln incinerator system has been installed was undergoing shakedown during the time of the evaluation. This system may prove satisfactory for the volume reduction of the hazardous oily sludges. The fly ash will have to be handled as a potential hazardous waste.

1.6. Refinery Specific Potential and Opportunities for Improvement

Energy Efficiency Improvements

Energy conservation program

Neftochim must develop and implement a comprehensive energy program. Currently a variety of refinery and petrochemical products are produced with little regard for the energy expenditures involved.

Steam balance

The steam balance can be improved by maximizing the condensate returned to the boiler. This requires maintenance and proper selection of the steam traps, in-line analysis, and polishing of the condensate.

Fired heater efficiencies

It is estimated that most of the refinery furnaces are operating at less than 60 % combustion efficiency. Installation of air preheaters, automatic control of combustion air, or convection section heat recovery (in the form of steam generation, process fractionator reboiling or preheating, or Hot Oil circulation) could improve the efficiency to over 90 %.

It is likely that new combination burners may be necessary. In some extreme cases replacement of furnaces may be required.

Atmospheric distillation units

The crude units at Bourgas are designed with only one pumparound. For more energy efficient operation a top pumparound should be considered. This would probably mean addition of heat transfer surface to the crude exchange train.

Amine acid gas removal units

The refinery amine units operate with a 15 wt% MEA solution. Currently, many refinery MEA units are able to operate with an amine solution of approximately 30 wt%. However, in order to control degradation of solution, a large activated carbon filter is required. The higher solution concentration could reduce the current energy consumption to about one half.

Fluid catalytic cracking

Currently the CO boiler (waste heat recovery from regenerator gas) is not in operation. The reason for the shutdown is not known. The refinery management could consider addition of a power recovery unit to the FCC Unit, which would improve its energy efficiency.

Operational Improvements

Computer software and hardware

Neftochim can certainly use both process simulation and LP model software. The simulation programs will help them in predicting the crude and vacuum unit operation with crude oils other than the crude oil being processed currently. It can predict the flash zone conditions, draw off temperatures, and pumparound duties. The program can also optimize the crude exchange train thereby contributing to overall refinery energy savings.

LP models are used for planning future operations with different feedstocks. One of the primary functions of the LP models is to conduct profit analysis.

Bourgas can also use a PC based maintenance planning and spare parts inventory program.

Vacuum unit

Consider replacing vacuum column internals with Structured Packing (Sulzer Mellapakor equal). This packing could result in lower pressure drop, better product separation, and higher capacity.

Additionally, consider the use of the Liquid Ring Vacuum pumps. These pumps are more efficient than steam ejectors. Environmentally, the vacuum pumps eliminate the problems associated with disposal of the hydrocarbon-water mixture that result from the use of traditional steam ejectors.

Alkylation unit

Neftochim operates a Sulfuric Acid Alkylation Unit. Recent designs of units of this type have been optimized in comparison to HF Alkylation Units. If not currently practiced, the spent sulfuric acid from the unit should be concentrated and recycled.

Bottoms processing

Currently, a portion of the vacuum bottoms is thermally cracked and the remainder is converted into bitumen. The refinery has had operating problems with the Thermal Cracking Unit, the quality of bitumen is not very good, and there is not a market for the bitumen produced. Neftochim is having difficulty in disposing of the excessive residual material produced in the refinery.

Following are some of the options for dealing with the bottoms material:

- Burn the bottoms in existing boilers and desulfurize the flue gas.
- Partially oxidize the bottoms, clean up the gas and generate power. Consider using a gas turbine with concurrent electrical power and steam generation.

Environmental Impact Reduction

Gasoline reformulation

Management of the Neftochim refinery is already considering installation of a new Catalytic Reforming Unit (with Continuous Catalyst Regeneration). Considering the potential future European octane requirements, this appears to be a necessary step to become a competitively operating refinery.

Light naphtha isomerization

The existing semi-regen catalytic reformers that would be replaced by the addition of a new CCR Reforming Unit could be converted into a Isomerization Units to further improve the gasoline pool product properties.

Secondary sealing of tanks

Proper sealing of storage tankage reduces product losses, alleviates maintenance requirements associated with preheat exchanger fouling caused by oxygenated compounds, and is a good idea environmentally.

Environmental controls

To bring the refining into compliance with reasonable environmental standards the following actions should be taken;

- Reduce the amount of oil lost to the various sewers.
- Determine source of excess sand in the sewer systems.
- Identify and remove the cross-connections between separate sewer systems.
- Remove and treat all the accumulated oily sludge.
- Revamp and repair the Wastewater Treatment Plant.
- Use alternate fuels or add on flue gas controls.
- Initiate a program of volatile organic compound emission control.

1.7. Refinery Specific Problems and Trends

The general problem that the Neftochim refinery faces is that it must adapt to competitive markets and changing social and economic conditions in Bulgaria, and for that matter - Europe. In this context, many specific problems must be addressed and solved. Some of these specific problems are discussed in section C.1.6 and some prospective solutions are offered. Further detailed feasibility evaluations are recommended and priorities must be set based on the refiner's financial situation.

1.8. Methodology of Data Collection

The purpose of the characterization report is to describe the operation of the Neftochim refinery as of July 1991, and to point out concerns regarding energy efficiency, environmental impact, and operational flexibility. A questionnaire to address the above mentioned points was prepared and sent to the refinery about a month before of the project team's arrival at the site.

During the visit to the refinery, it was apparent from the submittals of completed forms and from the material assembled that Neftochim had put in considerable effort and completed most of the questionnaire in a professional manner. The completed questionnaire furnished the basis for much of the data gathered by the Davy McKee team during their stay at the refinery.

1.9. Evaluation of Results Achieved by / for Data Base

Data gathered in the field, pertinent parts of which are included in a separate report, have been applied to the formation of a computerized data base.

1.10. Supporting Plant Data

The specifications of crude oil and various products are indicated in the following tables:

C.1.10.1 CRUDE OIL TBP DATA
C.1.10.2 LPG (LIQUIFIED PETROLEUM GAS) SPECIFICATIONS
C.1.10.3 GASOLINE PRODUCT SPECIFICATIONS
C.1.10.4 JET FUEL PRODUCT SPECIFICATIONS
C.1.10.5 DIESEL FUEL PRODUCT SPECIFICATIONS
C.1.10.6 FUEL OIL SPECIFICATIONS

Process block flow diagrams

FIGURES 2 through 8 depict the flow schemes of the major refinery units.

FIGURE 2 Simplified Process Flow Diagram Atmospheric Distillation Unit AD-5

FIGURE 3 Simplified Process Flow Diagram Diesel Hydrotreating Unit HDS-3

FIGURE 4 Simplified Process Flow Diagram Catalytic Reforming Unit CR-2

FIGURE 5 Simplified Process Flow Diagram FCC Feed Hydrodesulfurization

FIGURE 6 Simplified Process Flow Diagram FCC Unit

FIGURE 7 Simplified Process Flow Diagram FCC Gas Concentration Unit

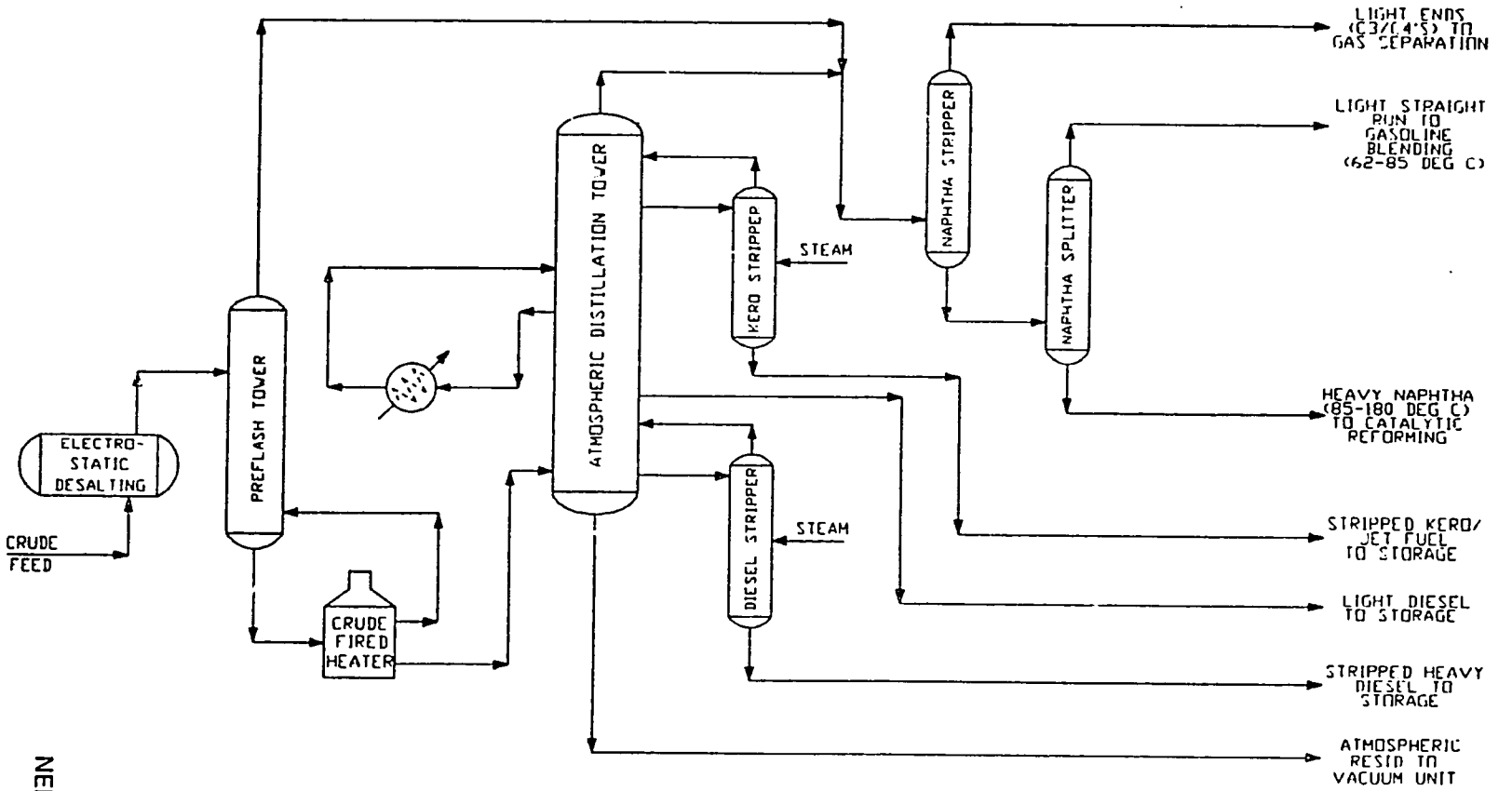

NEFTOCHIM

FIGURE 2

DATE	REV	BY	APPR	DESCRIPTION
10/16/91	A	T.C.	PDA	FOR EVALUATION REPORT
4/15/92	0	T.C.	PDA	FOR FINAL REPORT

Davy McKee Corporation
CHICAGO ILLINOIS

NEFTOCHIM REFINERY
BOURGAS, BULGARIA

SIMPLIFIED PROCESS FLOW DIAGRAM
ATMOSPHERIC DISTILLATION UNIT AD-5

DWG. No 2063-12-01-102 | 0

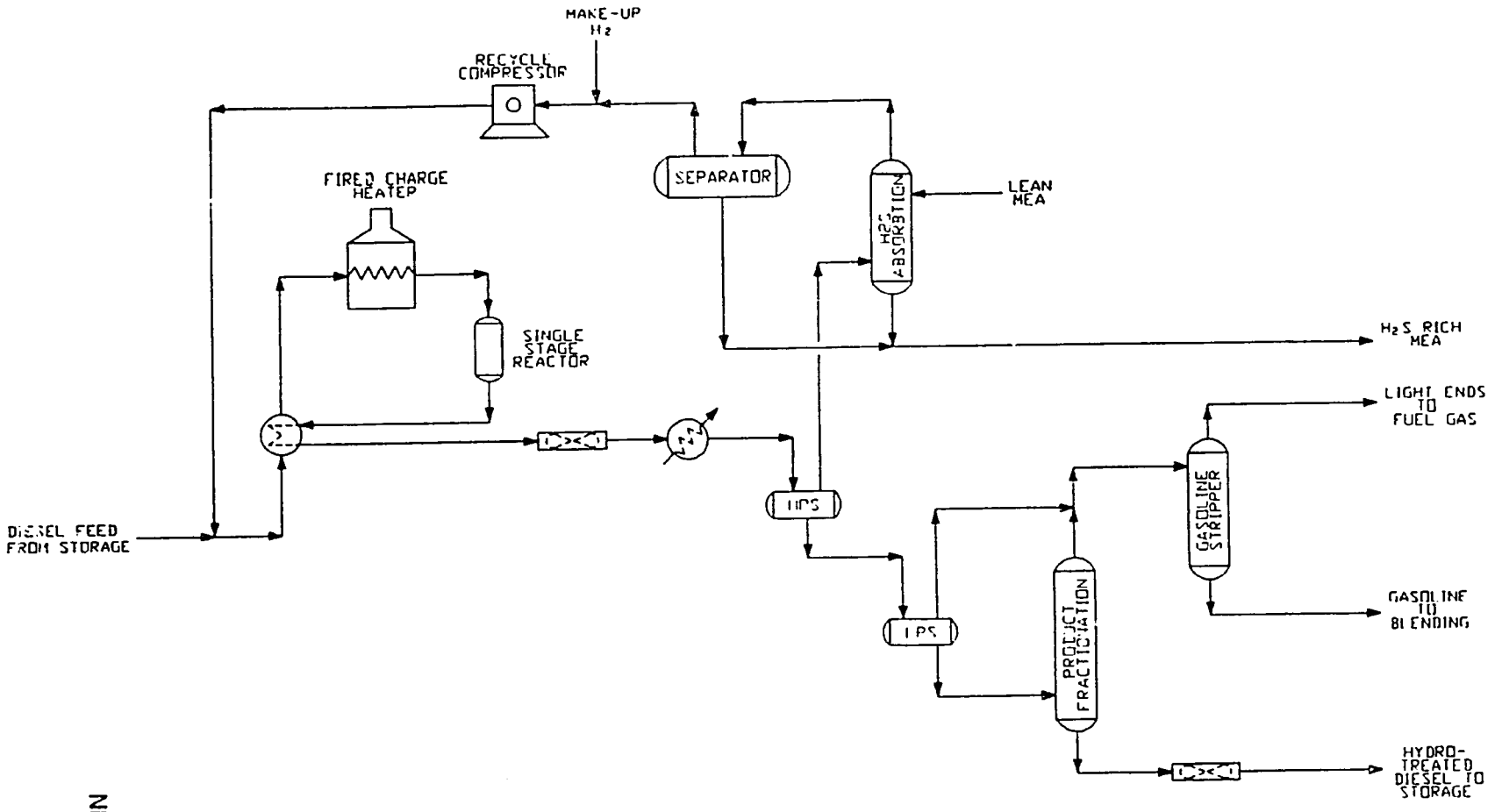

FIGURE 3

DATE	REV	BY	APPR	DESCRIPTION
10/16/91	A	T.G.	PDA	FOR EVALUATION REPORT
6/15/92	0	T.C.	PDA	FOR FINAL REPORT

Davy McKee Corporation
CHICAGO ILLINOIS

NEFTOCHIM REFINERY
BOURGAS, BULGARIA

SIMPLIFIED PROCESS FLOW DIAGRAM
DIESEL HYDROTREATING UNIT HDS-3

DWG. No. 2063-12-01-.07 | 0

NEFTOCHIM

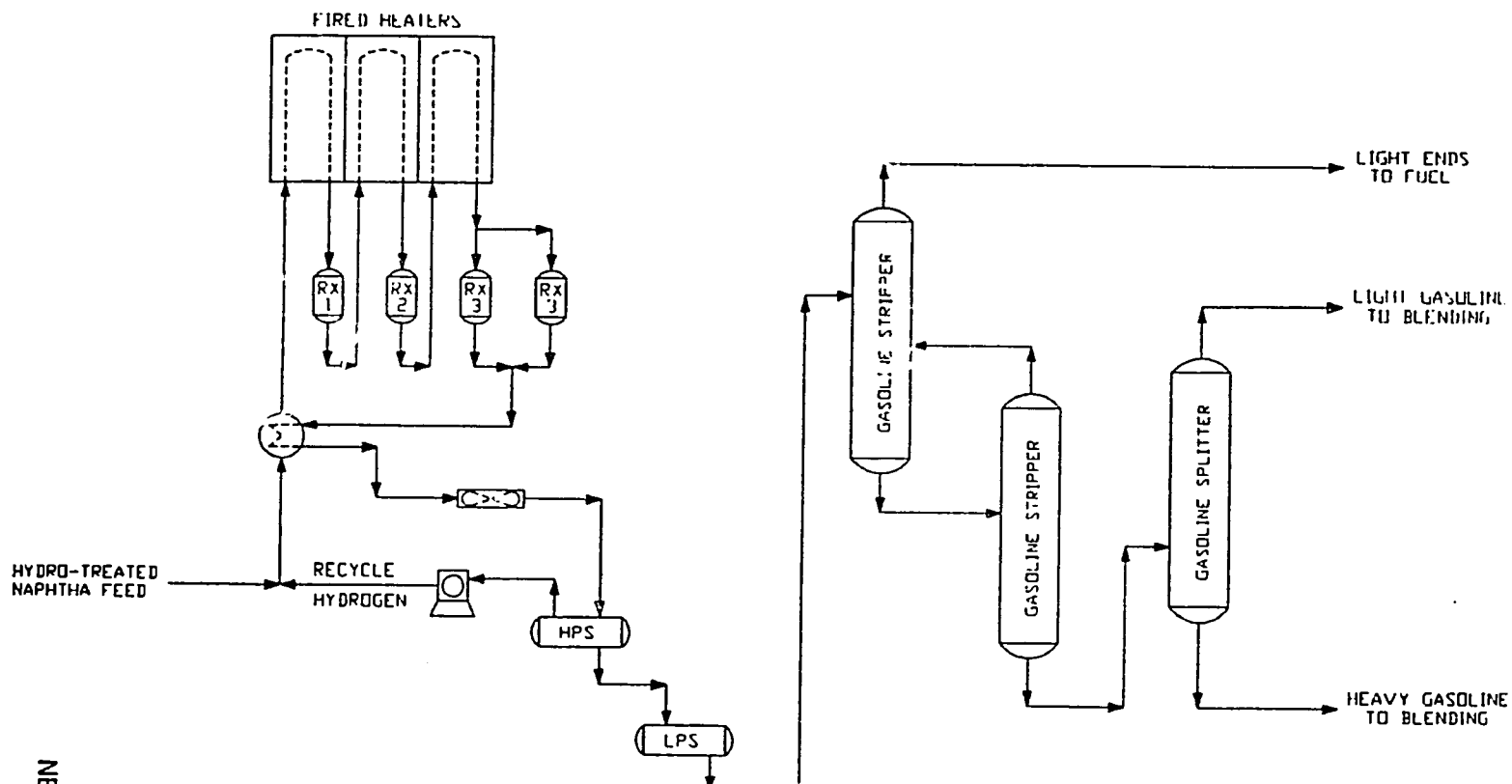

FIGURE 4

DATE	REV	BY	APPR	DESCRIPTION
10/16/91	A	T.G.	PDA	FOR EVALUATION REPORT
4/15/92	0	T.C.	PDA	FOR FINAL REPORT

Davy McKee Corporation
CHICAGO ILLINOIS

NEFTOCHIM REFINERY
BOURGAS, BULGARIA

SIMPLIFIED PROCESS FLOW DIAGRAM
CATALYTIC REFORMING UNIT CR-2

DWG. No. 2063-12-01-106 | 0

NEFTOCHIM

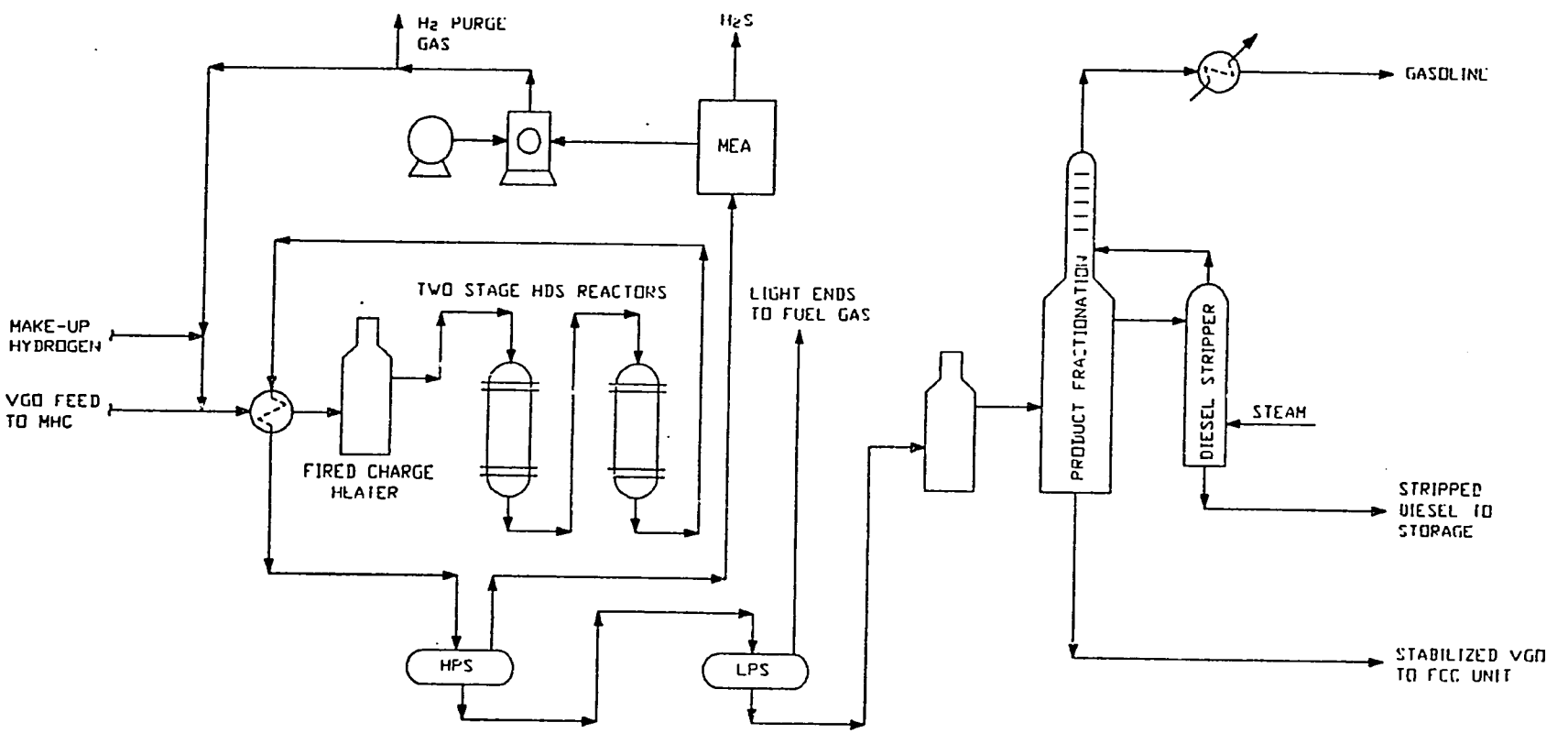

FIGURE 5

DATE	REV	BY	APPR	DESCRIPTION
10/15/91	A	T.G	PDA	FOR EVALUATION REPORT
4/15/92	U	T.G	PDA	FOR FINAL REPORT

Davy McKee Corporation
CHICAGO ILLINOIS

NEFTOCHIM REFINERY
BOURGAS, BULGARIA

SIMPLIFIED PROCESS FLOW DIAGRAM
(FCC FEED HYDRODESULFURIZATION)

DWG. No. 2063-12-01-103 | 0

NEFTOCHIM

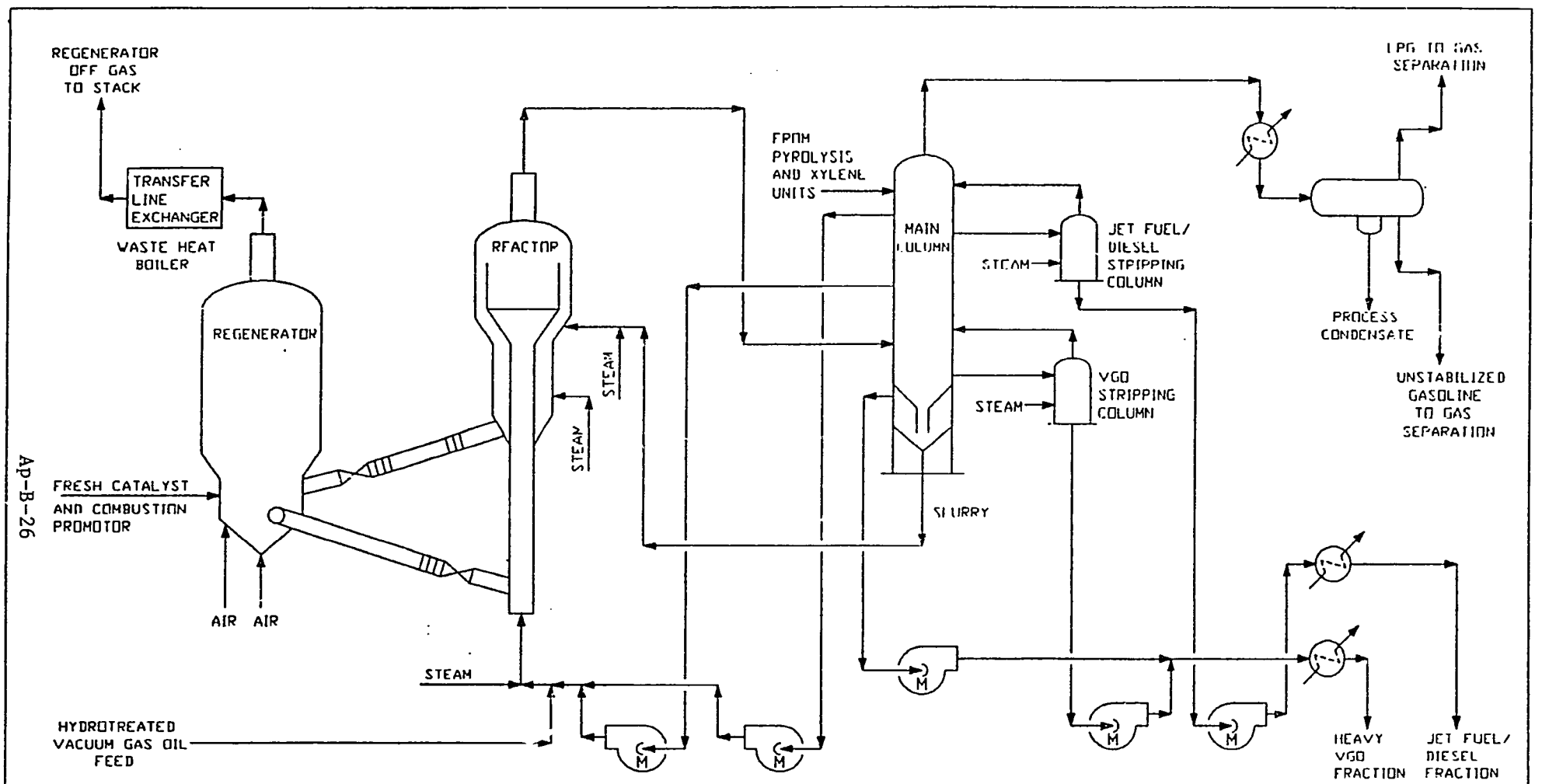

FIGURE 6

DATE	REV	BY	APPR	DESCRIPTION
10/16/91	A	T G	PDA	FOR EVALUATION REPORT
1/15/92	0	T C	PDA	FOR FINAL REPORT

Davy McKee Corporation
CHICAGO ILLINOIS

NEFTOCHIM REFINERY
BOURGAS, BULGARIA

SIMPLIFIED PROCESS FLOW DIAGRAM
FCC UNIT

DWG. No. 2063-12-01-104 | 0

NEFTOCHIM

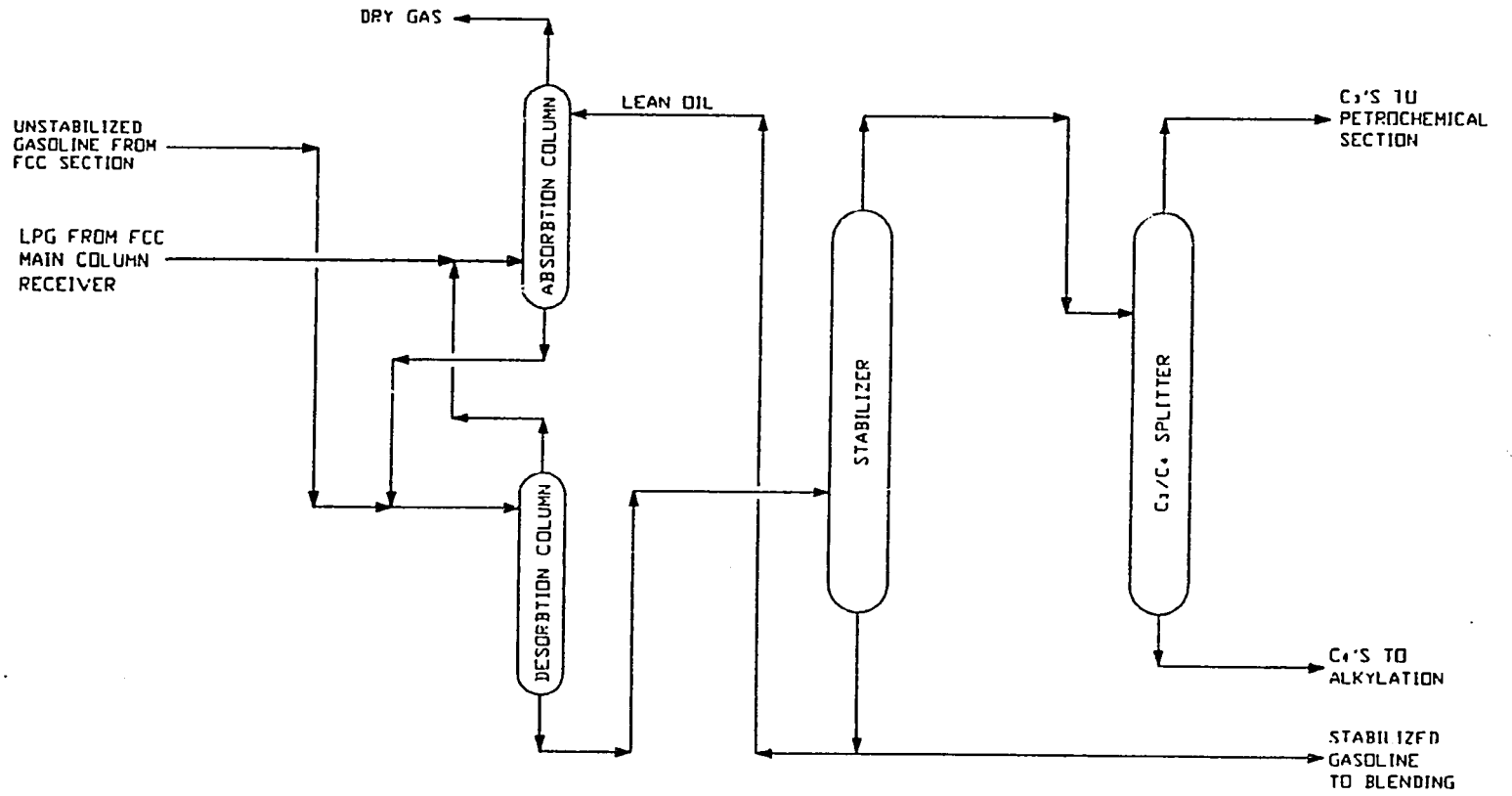

FIGURE 7

DATE	REV	BY	APPR	DESCRIPTION
10/16/91	A	T.C.	PDA	FOR EVALUATION REPORT
4/15/92	0	T.C.	PDA	FOR FINAL REPORT

Davy McKee Corporation
CHICAGO ILLINOIS

NEFTOCHIM REFINERY
BOURGAS, BULGARIA

SIMPLIFIED PROCESS FLOW DIAGRAM
FCC GAS CONCENTRATION UNIT

DWG. No. 2063-12-01-105 | 0

NEFTOCHIM

TABLE C.1.10.1 - NEFTOCHIM CRUDE OIL TBP DATA

CRUDE OIL	IRANIAN OIL		SOVIET OIL
Density, °API	29.2 (Heavy)	34.5 (Light)	32.5
Boiling Range, °C	wt%	wt%	wt%
15 - 62	2.4	2.4	2.6
62 - 70	3.5	3.2	3.3
70 - 90	5.5	5.6	5.1
90 - 105	7.6	6.8	7.3
105 - 120	9.4	10.0	9.2
120 - 140	12.6	13.6	12.0
140 - 160	15.8	17.5	14.8
160 - 180	18.9	21.2	17.9
180 - 200	21.7	24.4	20.8
200 - 220	24.8	26.8	23.9
220 - 240	27.9	28.8	27.2
240 - 260	31.2	31.8	30.7
260 - 280	34.6	35.6	34.2
280 - 300	37.6	39.8	37.7
300 - 320	40.9	44.4	41.9
320 - 340	44.2	49.4	45.3
340 - 360	47.1	54.4	48.1
360 - 380	50.1	58.8	52.1
380 - 390	51.8	60.5	54.0
Residual	97.4	97.0	97.7
Gases	98.6	99.0	99.5
Loss	100.0	100.0	100.0

TABLE C.1.10.2 - NEFTOCHIM LPG
(LIQUIFIED PETROLEUM GAS) SPECIFICATIONS

Composition	Propane	Butane	LPG
Vapor Pressure at 100 °F			1600
Volatile Residue			2
Butane and Heavier, LV % (Max)			70
Pentane and Heavier, LV % (Max)			2
Residual Matter			
Corrosion, Copperstrip, Max.			
Total Sulfur, ppmw			
Moisture Content			
Free Water Content			
If Bottled at Refinery?	No	No	Yes

TABLE C.1.10.3 - NEFTOCHIM GASOLINE PRODUCT SPECIFICATIONS

Destination	A-86	A-93	A-96	A-93H
Research Octane	86	93	96	93
Motor Octane	76	83	84	83
Total Lead g/kg (not more than)	0.15	0.15	0.15	0.006 g/dm^3
Density @ 20°C g/cm^3 (not less than)	0.700	0.700	0.700	0.720
Distillation				
IBP (not lower than)				
summer	32	32	32	32
spring/fall	30	30	30	30
winter	no limit	no limit	no limit	no limit
10% (not higher than)	70	70	70	70
50% (not higher than)				
summer	115	115	115	115
spring/fall	115	115	115	115
winter	110	110	110	110
90% (not higher than)	180	180	180	180
EP (not higher than)	205	205	205	205
Residue in Flask wt %	1.5	1.5	1.5	1.5
Residue + Losses wt %	3.5	3.5	3.5	3.5
Sulfur vol % (not more than)	0.05	0.05	0.05	0.05
Lower Heat of Combustion MJ/kg (not less than)	-	-	-	44
Induction Period (minutes) (not less than)	600	600	480	600
Acidity mg KOH/100 cm^3 product (not more than)	3	3	3	3
Mechanical Impurities and Water	none	none	none	none
Water Soluble Acids	none	none	none	none
Copper Strip Corrosion	OK	OK	OK	OK
Saturated Vapor Pressure kPa (not more than)				
summer	66.7	60	60	60
spring/fall	66.7	66.7	66.7	66.7
winter	86.7	80	80	80

NEFTOCHIM

TABLE C.1.10.4 - NEFTOCHIM JET FUEL PRODUCT SPECIFICATIONS

Designation	T-1	TC-1	T-2	RT
Density @ 20°C (not less than) g/cm^3	0.800	0.775	0.755	0.775
Distillation °C IBP	≤ 150	≤ 150	≥ 60	≥ 135
10% (not higher than)	175	165	145	175
50%	225	195	195	225
90%	270	230	250	270
98%	280	250	280	280
Kinematic Viscosity @ 20°C mm^2/sec (not less than)	1.50	1.25	1.05	1.25
-40°C mm^2/sec (not more than)	16	8	6	16
Lower Heat of Combustion MJ / kg (not less than)	42.90	42.90	43.10	43.12
Smokeless Flame Temperature °C (not less than)	20	25	25	25
Acidity mg KOH/100 cm^3 (not less than)	0.7	0.7	0.7	0.4-0.7
Saturated Vapor Pressure (Kpa)	no limit	-	13.3	-
Flash Point °C (not less than)	30	28	-	28
Freeze Point °C (not higher than)	-60	-60	-60	-55
Iodine No. g/100 g product (not more than)	2	3.5	3.5	0.5
Aromatics % (not more than)	20	22	22	22
Actual Resins mg/100 g fuel (not more than)	6	5	5	4
Sulfur % (not more than)	0.1	0.25	0.25	0.1
H_2S	none	-	-	-
Mercaptan Sulfur % (not more than)	-	0.005	0.005	0.001
Copper Strip Corrosion	OK	OK	OK	OK
Ash % (not more than)	0.003	0.003	0.003	0.003

NEFTOCHIM

TABLE C.1.10.5 - NEFTOCHIM DIESEL FUEL PRODUCT SPECIFICATIONS

Description	Summer	Spring/Fall	Winter
Density @ 20°C g/cm^3	no specification	no specification	no specification
Cetane No. (not less than)	45	45	45
Cetane Index (not less than)	45	45	45
Distillation °C (not higher than)			
50%	300	300	280
90%	360	360	345
95%	-	-	360
Kinematic Viscosity @ 20 °C (mm^2/sec)	2.5 - 8.0	2.5 - 8.0	2.5 - 8.0
Acidity mg KOH/100 cm^3 (not more than)	5.0	5.0	5.0
Ash % (not more than)	0.02	0.02	0.02
Sulfur % (not more than)			
Group I	0.20	0.20	0.20
Group II	0.30	0.30	0.30
H_2S Test	none	none	none

TABLE C.1.10.6 - NEFTOCHIM FUEL OIL SPECIFICATIONS

Description	Medium Fuel Oil	Heavy Fuel Oil
Kinematic Viscosity @ 80°C mm^2/sec (not more than)	59	115
"Engler" Viscosity, °E	8	15
Ash % (not more than)	0.10	0.14
Sulfur % (not more than) Lower Content Higher Content	 1.0 3.5	 1.0 3.5
Water Soluble Acids and Alkalines	-	-
Water and Sediment % (not more than)	1.0	1.0
Fluidity Temperature °C (not higher than)	-	-
Freeze Point °C (not higher than)	25	25
Flash Point °C (not lower than)	90	110
Lower Specific Heat of Combustion MJ/kg (not lower than)	40.2	39.8
Density @ 20°C g/cm^3 (not more than)	-	1.015

APPENDIX C. CALCULATION SHEETS

AP-C.1 Justification for "In-situ" Oxygen Analyzers
(Refer to Section J, Page 8)

Justification to install Zirtek "in-situ" oxygen analyzers in the firebox of heaters K-101 and K-102 at AD#5.

Data: K-101 $T_{outlet} = 349$ °C $O_2 = 12.0\%$ $Air_{EX} = 2.25$
K-102 $T_{outlet} = 321$ °C $O_2 = 13.8\%$ $Air_{EX} = 2.59$

Heating Value Oil = 9 500 kcal/kg Gas = 10 500 kcal/kg

Fuel flow Oil = 3 tonne/h Gas = 1 200 m_3/h
Furnace 4 decks high with 6 compartments

Theoretical air consumption for gas fuel:

$$V_T = \frac{U_D}{1\,000} \times 1.09 - 0.25 \qquad \text{(for refinery gas)}$$

$U_D = 12\,500$ kcal/kg

$$V_T = \frac{8\,750}{1\,000} \times 1.09 - 0.25$$

$= 9.015$ Nm_3 (air)/Nm_3 (fuel gas)

Calculation for V_{REAL} (Gas):

$$Air_{EX/AVG} = \frac{2.25 + 2.59}{2} = 2.42$$

$$\frac{V_{REAL}}{2.42} = 9.015 \text{ Nm}^3 \text{ air/Nm}^3 \text{ fuel gas}$$

$= 21.8$ Nm^3 air/Nm^3 fuel gas

Taking a very conservative approach; first, that the better firing and maintenance will reduce the O_2 to 10% and second that the O_2 analyzers will allow the excess air then be reduced to 30%. A major U.S. Midwestern refinery using this instrument, routinely holds air under 10%.

$$Air_{EX} = 2.42 \times \frac{10}{(12 + 13.8)/2} = 1.88$$

$$\frac{V_{REAL}}{1.88} = 9.015 \text{ Nm}^3 \text{ air/Nm}^3 \text{ fuel gas}$$

$$= 16.9 \text{ Nm}^3 \text{ air/Nm}^3 \text{ fuel gas}$$

$$\frac{V_{OPTIMUM}}{1.3} = 9.015 \text{ Nm}^3 \text{ air/Nm}^3 \text{ fuel gas}$$

$$V_{OPTIMUM} = 11.72$$

$$T_{STACK(AVG)} = \frac{(349 + 321)}{2} = 335 \text{ °C}$$

Calculate the real amount of excess air for gas:

$$Air_{REAL} = (16.9 - 11.72) \text{ Nm}^3 \text{ air/Nm}^3 \text{ gas}$$

$$= 5.18 \text{ Nm}^3 \text{ air/Nm}^3 \text{ gas}$$

Calculate the heat lost for the gas excess air:

$$Q_{LOST} = \frac{5.18 \text{ Nm}^3 \text{ air}}{\text{Nm}^3 \text{ gas}} \times \frac{1\,200 \text{ Nm}^3 \text{ gas}}{\text{h}} \times (335 - 32) \text{ °C} \times \frac{0.239 \text{ kcal}}{\text{Nm}^3 \text{ (air) °C}}$$

$$= 450\,000 \text{ kcal/h (gas)}$$

$$= \frac{450\,000 \text{ kcal}}{\text{h}} \times \frac{\text{kg}}{9\,500 \text{ kcal}}$$

$$= 47.4 \text{ kg/h}$$

Calculation of theoretical air consumption for fuel oil:

$$V_T = \frac{U_D}{1\,000} \times 0.85 + 2.0$$

$$= \frac{9\,500}{1\,000} \times 0.85 + 2.0$$

$$= 10.075 \text{ NM}_3 \text{ (air)/Kg(oil)}$$

Calculation of V_{REAL} for oil:

$$\frac{V_{REAL}}{1.88} = 10.075$$

$$V_{REAL} = 18.94 \text{ Nm}^3 \text{ air/kg oil}$$

Calculate V_{OPT} for 30% excess air:

$$V_{OPT} = 1.3 \times 10.075 \text{ Nm}^3 \text{ air/kg oil}$$
$$= 13.01 \text{ Nm}^3 \text{ air/kg oil}$$

Calculate the heat loss for the oil excess air:

$$AIR_{REAL} = (18.94 - 13.01) \text{ Nm}^3 \text{ air/kg oil}$$

$$= 5.93 \text{ Nm}^3 \text{ air/kg oil}$$

$$Q_{LOST} = \frac{3\,000 \text{ kg oil}}{\text{h}} \times (335 - 32)\ ^\circ\text{C} \times \frac{5.93 \text{ Nm}^3 \text{ air}}{\text{kg oil}} \times \frac{0.239 \text{ kcal}}{\text{Nm}^3 \text{ air } ^\circ\text{C}}$$

$$= 1\,288\,000 \text{ kcal/h}$$

$$= \frac{1\,288\,000 \text{ kcal}}{\text{h}} \times \frac{\text{kg oil}}{9\,500 \text{ kcal}}$$

$$= 135.6 \text{ kg oil/h}$$

Calculate total heat loss for the furnaces:

$$Q_{TOTAL} = (135.6 + 47.4) \text{ kg oil/h}$$
$$= 183.0 \text{ kg oil/h}$$

Correct for standard day (assume 330 days per year operation of the unit):

$$Q_{YEAR} = \frac{183 \text{ kg oil}}{\text{h day}} \times \frac{24 \text{ h}}{} \times \frac{330 \text{ day}}{\text{year}}$$

$$= 1\,449 \text{ tonne oil year}$$

Calculate costs:

Oil cost = 3.00 US \$/10_6 BTU
= 113.1 US \$/tonne

$$\text{Cost/y} = \frac{1\,449 \text{ tonne}}{\text{y}} \times \frac{113.1 \text{ US \$}}{\text{tonne}}$$

= 163 875 US \$

Payout calculation for O_2 analyzers installed in furnace compartment:

Savings = 163 875 / 6

= 27 313 US \$

Analyzer Costs = Material + Installation

= (10 500 + 5 000)

= 15 500 US \$

$$\text{Payout Time} = \frac{15\,500 \text{ US \$}}{} \times \frac{\text{y}}{27313 \text{ US \$}}$$

= 0.675 y = 6.8 months

AP-C.2 Computer Simulation

DMC utilized an in-house licensed computer model to simulate crude unit operating data.

Following are some important details of the Neftochim crude distillation simulation. A summary drawing, Figure 8 is attached.

1.) Required preheat train (from 21 °C) up space to the preflash tower is 27.6 x 10^6 kcal/h.

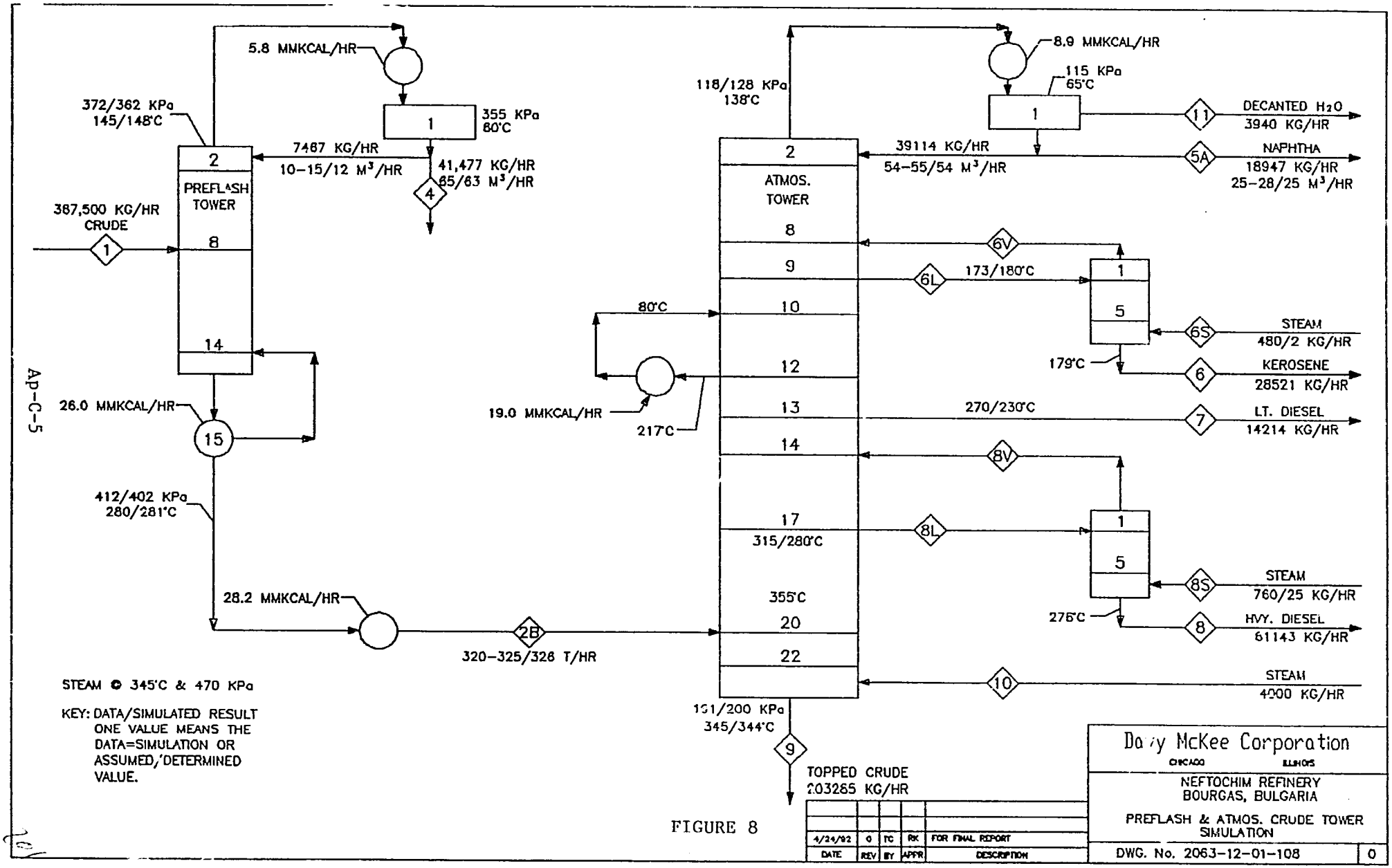
5.8 MMKCAL/HR
372/362 KPa
145/148°C
355 KPa
60°C
7467 KG/HR
10-15/12 M³/HR
41,477 KG/HR
65/63 M³/HR
PREFLASH TOWER
387,500 KG/HR
CRUDE
26.0 MMKCAL/HR
412/402 KPa
280/281°C
28.2 MMKCAL/HR
320-325/326 T/HR
STEAM @ 345°C & 470 KPa
KEY: DATA/SIMULATED RESULT
ONE VALUE MEANS THE DATA=SIMULATION OR ASSUMED/DETERMINED VALUE.
118/128 KPa
138°C
ATMOS. TOWER
80°C
19.0 MMKCAL/HR
217°C
355°C
151/200 KPa
345/344°C
TOPPED CRUDE
203285 KG/HR
8.9 MMKCAL/HR
115 KPa
65°C
39114 KG/HR
54-55/54 M³/HR
DECANTED H2O
3940 KG/HR
NAPHTHA
18947 KG/HR
25-28/25 M³/HR
173/180°C
STEAM
480/2 KG/HR
179°C
KEROSENE
28521 KG/HR
270/230°C
LT. DIESEL
14214 KG/HR
315/280°C
STEAM
760/25 KG/HR
276°C
HVY. DIESEL
61143 KG/HR
STEAM
4000 KG/HR
Daniel McKee Corporation
CHICAGO ILLINOIS
NEFTOCHIM REFINERY
BOURGAS, BULGARIA
PREFLASH & ATMOS. CRUDE TOWER SIMULATION
DWG. No. 2063-12-01-108
0
4/24/92 0 TC RK FOR FINAL REPORT
DATE REV BY APPR DESCRIPTION

FIGURE 8

2.) The preflash tower simulation matched as follows:

	Data	Simulation
Top Pressure, kPa	372 - 392	362
Top Temperature, °C	140 - 145	148
Condenser Temperature, °C	60	60
Reflux, m^3/h	10 - 15	12
Overhead Liquid, m^3/h	65 - 70	63
Bottom Pressure, kPa	412 - 422	402
Bottom Temperature, °C	270 - 280	281
Preflashed Crude, tonne/h	320 - 325	326
Crude Feed, tonnes/h	360 - 375	367.5 (set*)

3.) Other preflash tower results:

Condenser Duty	5.8×10^6 kcal/h
Reboiler Duty	26.0×10^6 kcal/h
Overhead vapor product	None - the condensate is subcooled

4.) The main tower simulation matched as follows:

	Data	Simulation
Top Pressure, kPa	108 - 118	128
Top Temperature, °C	135 - 138	138
Condenser Temperature, °C	65	65
Reflux, m^3/h	54 - 55	54
Overhead Liquid, m^3/h	25 - 28	25
Kerosene Draw Temperature, °C	173	180
Light Diesel Temperature, °C	270	230
Heavy Diesel Draw Temp., °C	315	280
Bottom Pressure, kPa	177 - 191	200
Bottom Temperature, °C	345 - 348	344

5.) The reflux rate, condensate temperature, and naphtha rates were specified in the simulation. The other product rates were variables. The pumparound duty was also specified to achieve the best match of tower temperature profile (the condensing and flash zone enthalpies were variables).

6.) Fractionation was also specified for the main tower / side stream stripper simulations:

Specification: Kerosene D86 (EP) = 239 °C
Heavy Diesel D86 (EP) = 360 °C

Then, the strip-stream rates were adjusted until the following specs were achieved:

Specification: Kerosene D86 (IBP) = 135 °C
Heavy Diesel D86 (IBP) = 189 °C

The resulting stripping steam requirements were as follows:

	Data	Simulation
Kerosene Stripping Steam, kg/h	480	2
Heavy Diesel Stripping Steam, kg/h	760	25
Main Tower Bottoms Steam, kg/h	4 000	4 000

Thus, much less steam was needed in the simulation than the plant data showed. Considering two earlier data results:

A) The kerosene and heavy diesel stripping steam rates were up to 400 kg/h

B) The medium diesel D86 (IBP) = 187 °C is only > 2 °C than heavy diesel D86 (IBP) = 189 °C

7.) Other main tower results:

Condenser Duty	8.9×10^6 kcal/h
H_2O Decant	3 940 kg/h
Overhead vapor product	The condensate is subcooled
Enthalpy Added to Preflashed Crude	28.2×10^6 kcal/h
PA Duty	19.0×10^6 kcal/h
PA Draw Temp	217 °C
Kerosene Product Rate	28 521 kg/h
Kerosene Product Temperature	179 °C
Light Diesel Rate	14 214 kg/h
Heavy Diesel Rate	61 143 kg/h
Heavy Diesel Temperature	276 °C
Topped Crude Rate	203 285 kg/h

8.) The tray efficiencies for the tower simulations are obvious from the summary drawing:

Preflash Tower:	15/29 = 52%
Main Tower:	22/46 = 48%
Side Stream Strippers:	5/10 = 50%

9.) As was known already, the fractionation on this atmospheric crude column was poor. However, the simulation determined a very inefficient 34% overflash.

10.) The API gravities for product data appear wrong. A comparison with simulation results is as follows:

	Data	Simulation
Kerosene	73.0	47.9
Light Diesel	69.0	43.6
Heavy Diesel	33.8	36.9
Atm. Residue	40.5	18.2

The "data" were probably back-calculated from TBP cut points or another way.

APPENDIX D. ELECTRICAL DISTRIBUTION SYSTEM

SYMBOLS

TEZ — THERMAL POWER STATION „NEFTOCHIM" – BURGAS PROPERTY

ZRU — INDOOR DISTRIBUTION UNIT 110 KV

GRU-1, GRU-2 — NAME OF UNIT FOR DISTRIBUTION TEZ'S VOLTAGE UP TO 6 KV

GPP-1, GPP-2, GPP-4 — NAME OF 110/6 KV TRANSFORMER SUBSTATION WITH 6 KV DISTRIBUTION UNIT, „NEFTOCHIM" PROPERTY

„AMUR", „BAICAL", „ORBITA", „GLOBUS", „PIRIN", „RILA", „BREZA", „LIPA" — NAMES OF 110 KV OVERHEAD ELECTRIC POWER LINE FOR CONNECTION WITH STATE UTILITY (SCOP) AND BETWEEN 110/6 KV SUBSTATION, „NEFTOCHIM" PROPERTY

— 110 KV DISCONNECTOR SWITCH

— 110 KV AND 6 KV CIRCUIT BREAKER

— 0,4 KV CIRCUIT BREAKER

— ELECTRIC GENERATOR

— MOTOR

— CURRENT LIMITING REACTOR

— POWER TRANSFORMER

ATS — SPARE SUPPLY AVTOMATIC SWITCH – ON

LVB — PRIMARY DISTRIBUTION BOARD OF TRANSFORMER SUBSTATION 6/0,4 KV

MCC — SECONDARY DISTRIBUTION BOARD FOR MOTOR SUPPLY

FIGURE 9

SYMBOLS	PAGE Ap-D-2

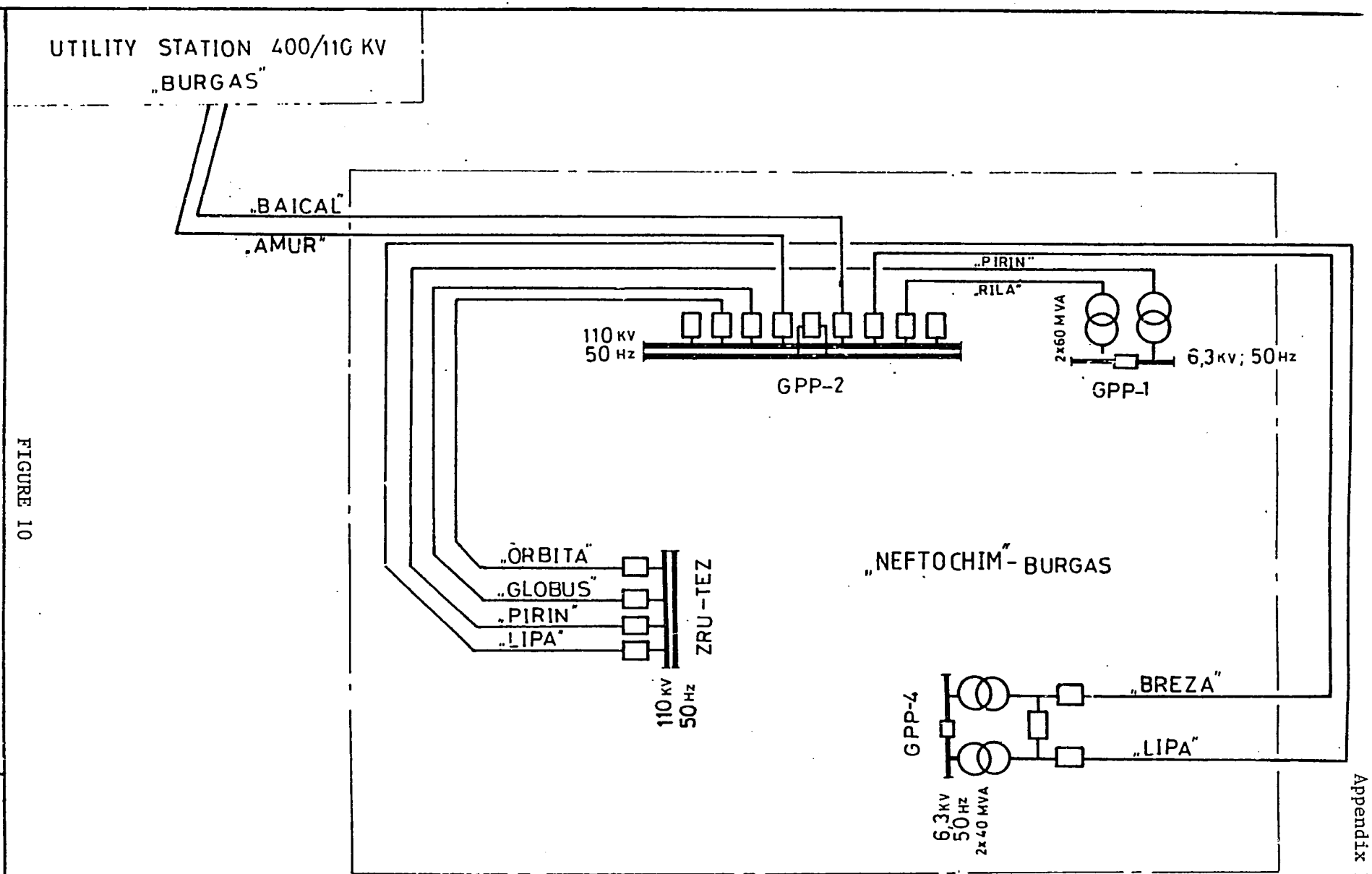

110 KV OVERHEAD ELECTRIC POWER LINE SCHEME

FIGURE 10

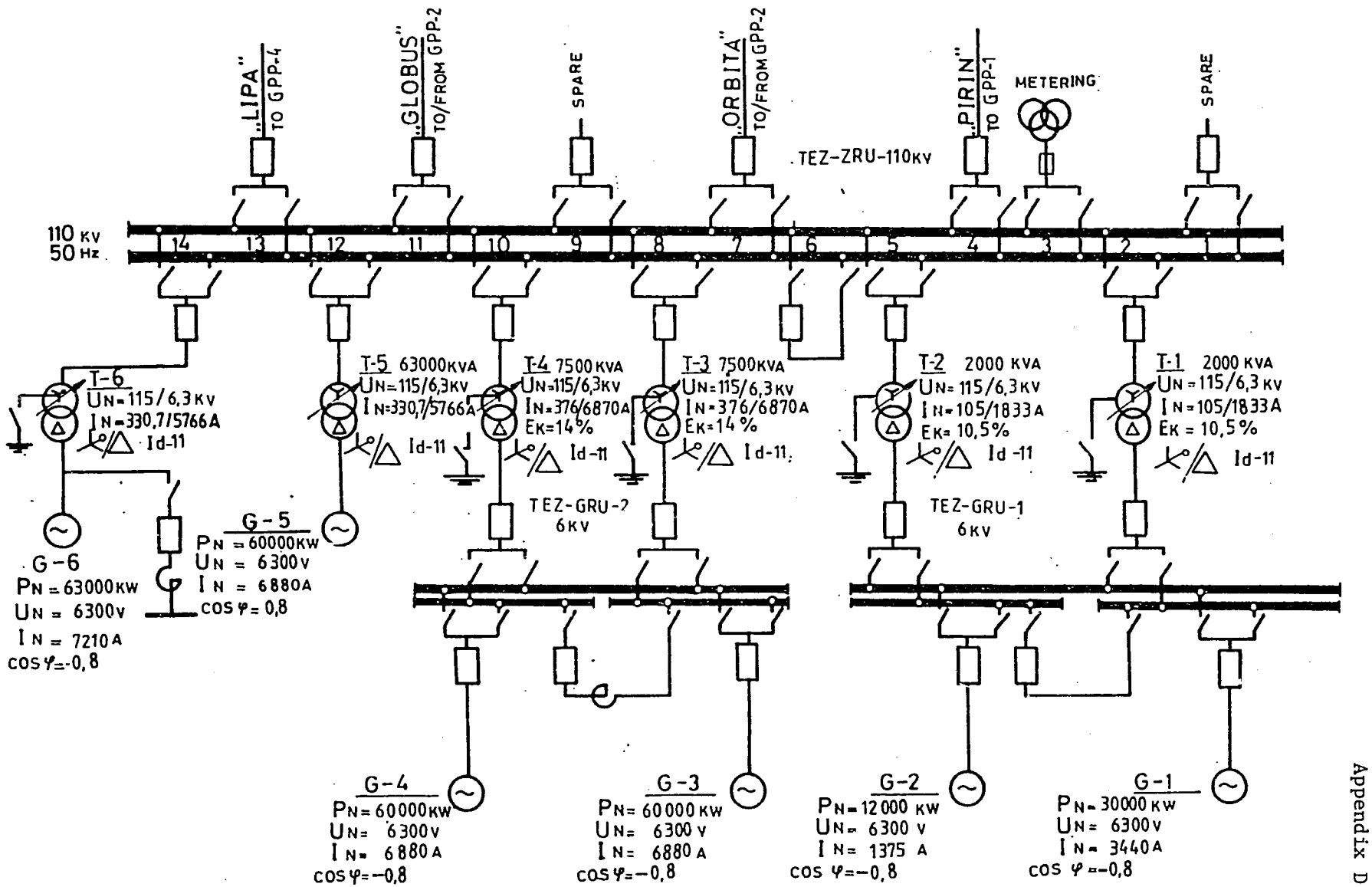

FIGURE 11

THERMAL POWER STATION:
TEZ-ZRU-110KV, GRU-1-6KV, GRU-2-6KV

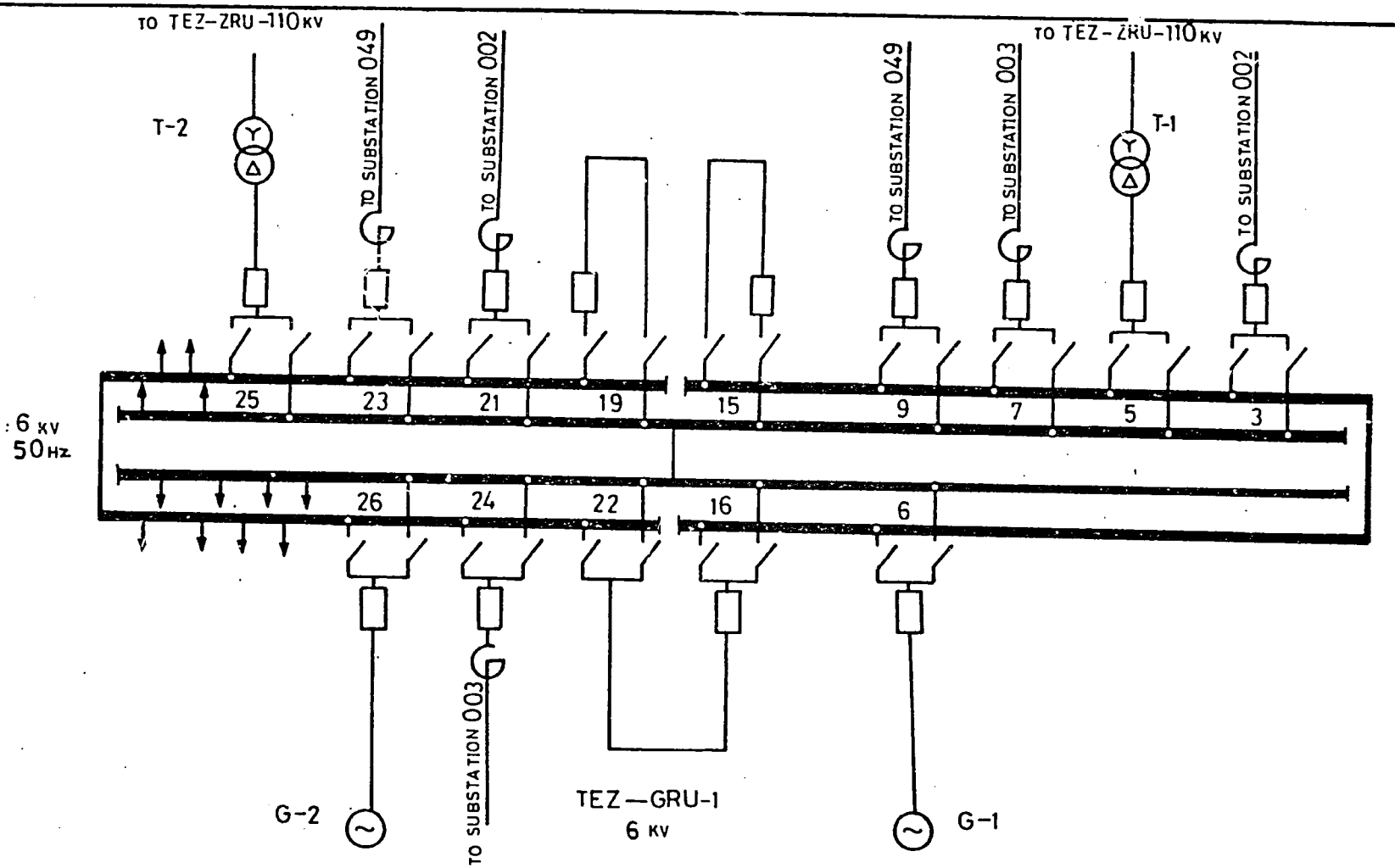

THERMAL POWER STATION:
DISTRIBUTION UNIT TEZ-GRU-1-6KV

FIGURE 12

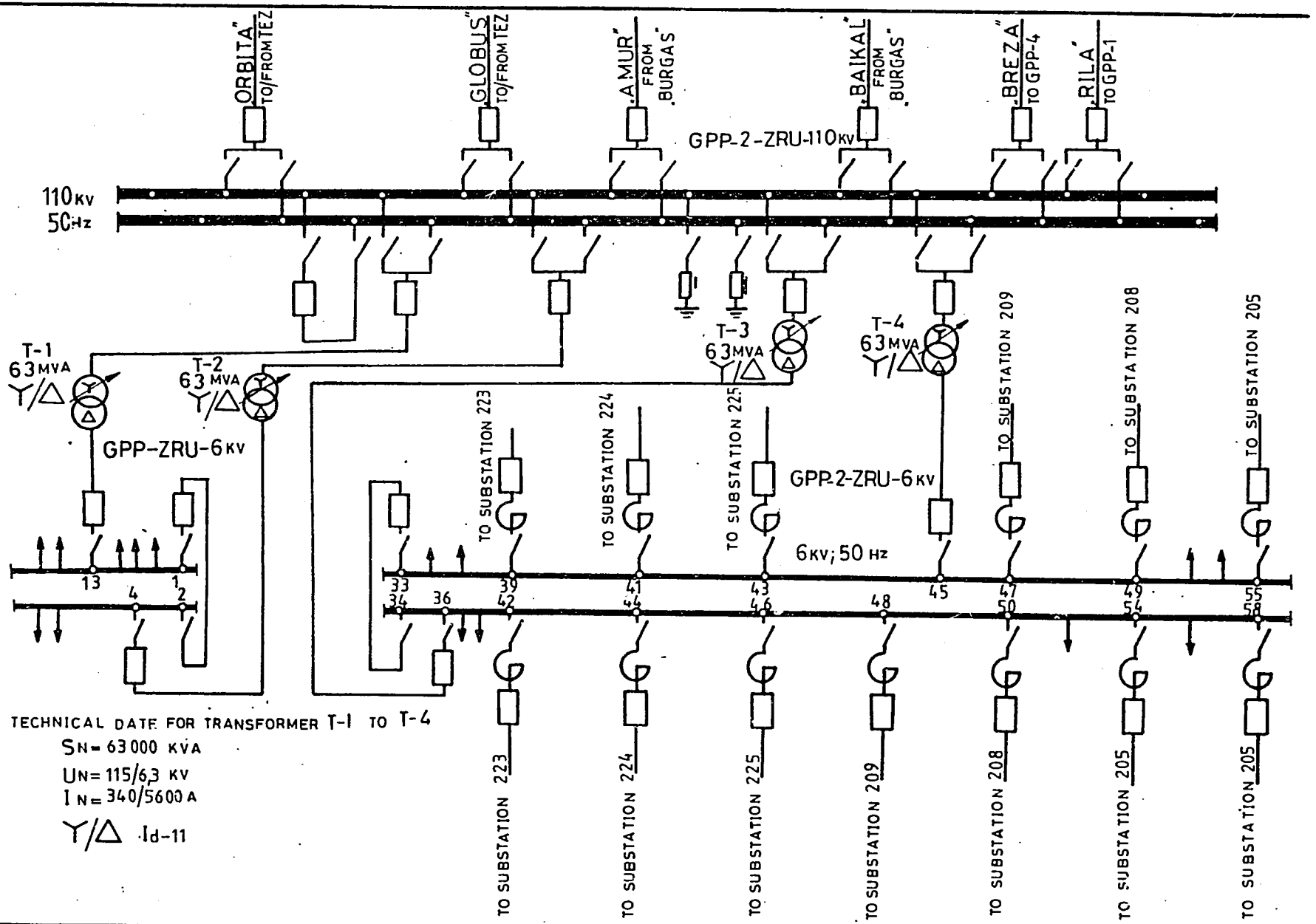

FIGURE 13

110/6 TRANSFORMER SUBSTATION WITH 6KV DISTRIBUTION UNIT

APPENDIX E. ABBREVIATIONS

°API	deg API (gravity of oil fractions, defined by API)
°C	degree Celsius
°F	degree Fahrenheit
%	per cent
/	per (e.g., tonnes/day)
A	ampere
ACFM	actual cubic feet per minute
AFBC	Atmospheric Fluidized Bed Combustion
API	American Petroleum Institute
ASTM	American Society of Testing Materials
BACT	best available control technology
BFW	boiler feed water
BOD	biological oxygen demand
BPCD	barrels per calendar day
BPSD	barrels per stream day
BS&W	Basic, Sediment and Water
BTX	benzene toluene xylene
Btu	British thermal units
C.F.	characterization factor
CCR	continuous catalyst regeneration
COD	chemical oxygen demand
CV	calorific value (heat of combustion)
DCS	distributed control system
DEA	Diethanolamine
EP	end point
EPA	Environmental Protection Agency (U.S.)
FBP	final boiling point
FCC	fluid catalytic cracking
FGD	flue gas desulfurization
FOE	fuel oil equivalent
G	giga (10^9)
GCV	gross calorific value
GJ	giga joules
HC	hydrocarbons
HDS	hydrodesulfurization
HP	high pressure
Hg	mercury
Hz	hertz
IBP	initial boiling point
IGT	Institute of Gas Technology
ISBL	inside battery limit
J	joule
KRW	Kellogg Rust Westinghouse
LHSV	Liquid Hourly Space Velocity

LP	linear programming/low pressure
Lube	Lubricating
M	mega(10^6)
MEA	Monoethanolamine
MEK	methyl ethyl ketone
MHC	mild hydrocracking
MON	motor octane number
MPa	Megapascal, a unit of pressure
MSW	municipal solid waste
MTBE	methyl tertiary butyl ether
MVA	mega volts ampere
MVAR	mega voltampere reactive
MW	mega watts
NAAQS	National Ambient Air Quality Standards
NCV	net calorific value
NO_x	Oxides of Nitrogen
NPDES	National Pollutant Discharge Elimination System
OSBL	outside battery limit
OVA	Organic Vapor Analyzer
PFBC	Pressurized Fluidized Bed Combustion
PONA	Paraffins, Olefins, Naphthanes and Aromatics
Pa	pascal, a unit of pressure
RCC	reduced crude conversion
RON	research octane number
RTD	Resistance Temperature Detector
RVP	Reid Vapor Pressure
S.R.	Straight Run
SCFD	standard cubic feet per day
SCFH	standard cubic feet per hour
SCFM	standard cubic feet per minute
SG	specific gravity
SO_x	Oxides of sulfur
SRC	solvent refined coal
T	tera (10^{12})
TBP	true boiling point
TDS	total dissolved solids
TEFC	totally enclosed fan cooled
TEL	tetraethyl lead
TOC	total organic carbon
TSS	Total Suspended Solids
UOP K	UOP Characterization Factor
V	volt
VOC	volatile organic compound
WWTP	wastewater treatment plant
WATSON K	Watson Characterization Factor
XP	explosion proof
atm	atmosphere or atmospheres

112

bar	bar
cP	centipoise
cSt	centistokes
cal	calorie
cm	centimeters
cps	cycles per second
day	day
ft^3	cubic feet
ft	feet or foot
g	gram
gal	gallons
gpm	gallons per minute
h	hour
hp	horse power
in	inch or inches
k	kilo
kA	kiloamperes
kPa	kilo pascal, a unit of pressure
kV	kilovolts
kWh	kilowatt hour
kcal	kilo calories
kg	kilogram
kg/cm^2	kilogram per square centimeter
lb	pound or pounds
liter	liter or litre
m	meter or metre
max.	maximum
mg	milligram
mi	mile
million	million (10^6)
min	minute
min.	minimum
mm	millimeters
mol	mole
n	normal
ohm	ohm
pH	pH, a measure of acidity or strength of a base
percent	percent (or %)
phase	phase (electrical)
ppm	parts per million
ppmv	parts per million (volume)
ppmw	parts per million (weight)
ppb	parts per billion
psi	pounds per square inch
psia	pounds per square inch absolute
psig	pounds per square inch gauge
ptb	pounds per thousand barrels of oil

rpm	revolutions per minute
sec	seconds
tonne	metric ton
tonnes	metric tons
vol	volume
wt	weight
y	year

APPENDIX F. USAID TERMS OF REFERENCE

USAID

TERMS OF REFERENCE

DESCRIPTION/SPECIFICATIONS/WORK STATEMENT

Component #2: A PETROLEUM REFINERY EFFICIENCY IMPROVEMENT ENERGY CONSERVATION PROGRAM

1. BACKGROUND

The petroleum sectors of Bulgaria, Czechoslovakia, Poland, Romania, and Yugoslavia (as well as that of Hungary) are emerging from a 40-year period of centrally-planned crude supplies and centrally-controlled markets. Practically all of the petroleum refineries in these six countries were built, or modernized, during this period.

Among the five countries, it appears that Bulgaria has three separate refineries having an aggregate throughput of 300,000 B/D; Czechoslovakia has seven aggregating 455,000 B/D; Poland nine with an aggregate throughput of 385,000 B/D; Romania thirteen aggregating 617,000 B/D; and Yugoslavia seven with an aggregate capacity of 609,135 B/D. Now, these refineries face changing circumstances.

First, it is likely that the existing refineries were designed to process a narrow slate of crude oils supplied from the USSR. Now, crude supply options have broadened so that supplies can be bought on the world market through spot and contract purchases. The USSR appears to be phasing out as a primary crude supplier to these countries. Accordingly, potential future crude oil slates can have a much broader range of physical and chemical characteristics than has heretofore been the case.

Second, market conditions for the refinery product slates have been based on the principles of a centrally-planned national economy. Expectations, because of the shift to democratic pluralism in these countries, are for a higher standard of living for the populations, for a greater awareness of the need for environmental protection, and for shifts in refinery-product slates that will occur because of these. The capabilities of the mix of processing units in the refineries in each country to adjust simultaneously to changing crude slates and product slates will be brought into question.

Third, greater public awareness of preserving environmental quality and of the environmental deterioration that has occurred during the past forty years are likely to force major changes in refinery design and operating practices to reduce noxious gaseous, liquid, and solid waste emissions. This awareness is likely to emphasize production of unleaded gasolines and alcohol additives, and perhaps also the exploration of neat alcohol and compressed natural gas alternatives. At the same time, changes in refinery operations will be demanded to reduce noxious emissions to the extent practical.

Finally, tightened economic conditions will force refinery managements to improve operations through introducing more efficient internal utilization of energy and through implementing opportunities for energy conservation. These improvements will have to occur while anticipating changing crude and product conditions and with an inventory of processing units in the refineries that in all likelihood has a limited flexibility to adapt to changes. The roles for alternative fuels could emerge here also.

Compounding the problem of managing change are shortages of foreign exchange, increases in foreign exchange demands because of purchase of crude oil supplies on the open market at now greatly increased price levels, and demands on investment capital that will be generated by the political and economic changes in these countries. Foreign investment by international oil companies in petroleum-sector investment opportunities could bring needed foreign exchange and could potentially lead to new refinery construction at strategic locations and the scrapping of some existing refineries.

The complexity of the relationships within the petroleum sector system is somewhat illustrated in Figure 1 of this Appendix.

Obviously, managing the process of change will take some time. The inputs for analysis are not yet completely available. Economic benefits will depend on national policies, formed or as yet unformed. The current crude supply and pricing picture is an unstable one. Foreign investor interest in the five countries probably varies among the countries and perhaps is not yet well focused on the petroleum sector.

Nevertheless, a start in an analysis to improve the situation can be made provided the focus of initial efforts is on a rationalization of the petroleum-system situation in each of the five countries. Rationalization intends (a) efficient, effective, and environmentally-acceptable improvement in the production of petroleum products to serve current domestic markets, (b) adaptation of current operating practices to serve emerging domestic markets from expected, cost-attractive, crude-oil slates, and (c) identification of the improvements in terms of consistency with the privatization policies in each of the five countries.

2. GOAL AND OBJECTIVES

Accordingly, the generic goal of the work is to begin a process that ultimately can lead to such rationalization of the petroleum sectors in each of the five countries. The end results for the work at this time are

a. an organized data base comprising available data and information relevant to producing inputs for later use by others (when sufficient data and information for the

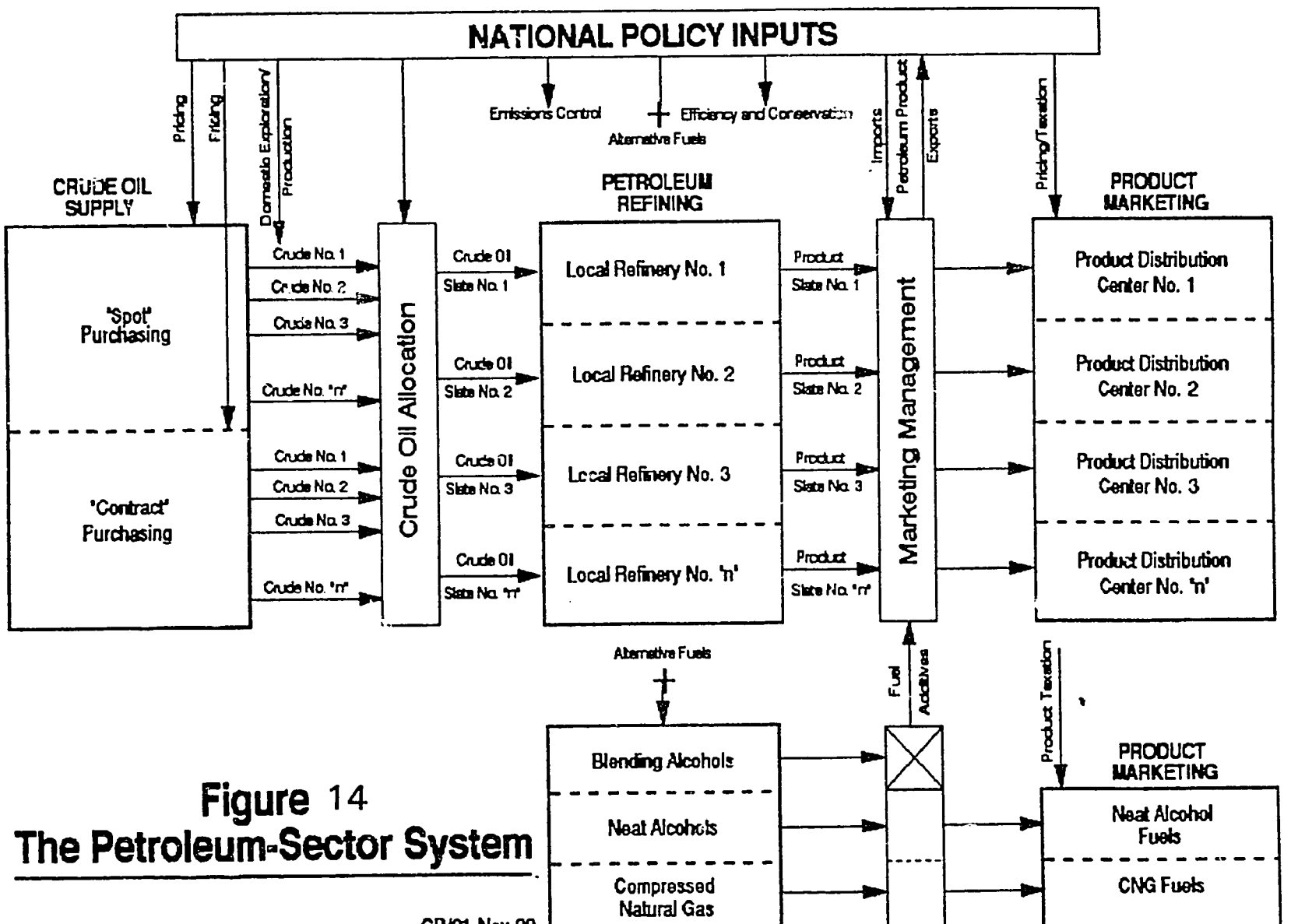

Figure 14
The Petroleum-Sector System

EE6

CB/21-Nov-90

various components of the petroleum system, such as is shown in Figure 1, become available) in a commercial linear programming model to optimize the petroleum system in each country,

b. low-cost improvements in the energy efficiency and environmental impact of selected refineries producing the current product slates that have been implemented during the course of the Contractor's work, and

c. the identification of further improvements which can only be implemented at a later time by others through making a significant investment that needs to be justified.

Accordingly, the objectives of the work focus on the five countries and are

a. for the refinery sector in each country and to the extent that relevant information is available, to describe the process mix in each refinery, the technical capabilities, and current operating practices in a form that (1) provides a data base for undertaking further and future work by others aimed at optimizing the petroleum system in each country and (2) more specifically for the present, enables at least qualitative judgments to be made of effects of changing crude-oil slates on refinery product slates;

b. for a sample of two refineries each in Czechoslovakia, Poland, and Yugoslavia and one refinery each in Bulgaria and Romania, to identify changes in operating practices and low-cost modifications to equipment that can be immediately implemented to increase the efficiency of energy utilization, to conserve energy by avoiding unjustified use, and to reduce as far as practical undesirable gaseous, liquid, and solid effluents;

c. for the same refinery selection in each country, to identify, characterize, and recommend more-extensive changes in practices and equipment and modifications to the process units, which appear justifiable but at the same time require further study possibly with inputs that may not yet be available; and

d. to assist the management of each refinery selected in each country, as needed, in the implementation of the changes identified in b. above through on-the-spot assistance (including training sessions for refinery personnel).

3. APPROACH

This work statement is intended to be generic and applicable in each of the five countries. The intent is to undertake the work with two separate teams of specialized personnel operating in parallel. One team will undertake the work in three countries sequentially and the other in the two remaining countries sequentially. The two teams will be supported as appropriate by a home-office team. The work of the three teams will be coordinated by a program director.

In order to permit pragmatic planning for efficient accomplishment of the work, the first activity will be a reconnaisance in the five countries, probably lasting five weeks, during which needed technical and administrative inputs will be developed and needed local support arranged for. In order to gauge the effectiveness of the work, the final activity will be return visits to the five countries, probably over a two week period when the final reports have been submitted, for the purpose of discussing the results and answering questions that may arise.

The expectations are that considerable data and information will be collected for the countries and for the operating oil refineries. Also, expectations are that this data base, aside from the needs of the Contractor's work program and even after the completion of his work, can provide continuing inputs to other efforts aimed at improving operations in the non-refinery components of the petroleum-sector system (see Figure 1) or to follow-on efforts aimed at implementing the longer-term improvement opportunities identified in the work. Therefore, data and information collection is to be computer oriented with programs organized to be user-friendly and documented accordingly in the Contractor's final reports.

Furthermore, in the identification of improvement opportunities relevant to achieving the objectives of the work, expectations are that benefit/cost estimates will be prepared and/or evaluations performed as far as practical. Estimates and calculations will, with little doubt, require assumptions to fill in for a lack of data. Therefore, estimate preparation and evaluation of opportunities is also to be computer-oriented and user-friendly with programs designed to permit asking "what if" questions, with documentation incorporated in the Contractor's final reports.

Petroleum refineries and petrochemical manufacturing plants are closely linked both physically and through refinery products that become petrochemical feedstocks. The work shall be confined to petroleum refineries only. For this purpose the refinery shall be defined as comprising all

installations that pertain to the receipt of the crude oil through to processing and storage of the refinery's primary products. A primary product shall be defined as one that has been fully processed so as to be marketable. On-site facilities to blend different gasoline streams, produce, and process them to final specifications are refinery units. Refinery gas and/or liquid streams that are delivered to other units for further processing, such as to ethylene, ammonia, or aromatic extraction, are to be considered as finished products.

Equipment purchases (both for test work and for permanent installation) needed for the implementation of short-term improvements shall be defined and justified. A brief report shall be submitted for A.I.D. approval before committing to purchase.

4. TASKS

The following tasks are foreseen for the work.

a. Refinery Characterization

The work is technically oriented. It involves preparing for each refinery in each country, a block flow diagram showing the processing units and the support facilities between receipt of the crude oil slate and the dispatch of the product slate to market. The depth of detail for this characterization will provide

1) a description as far as practical of the capability of each processing unit in terms of feedstocks and feedstock variability and product yields and specifications; of the operating conditions, age, mechanical condition of the processing units; of the consumption of utilities (electricity, water, catalysts, chemicals, etc.); and of the quantities and characteristics of the effluents.

2) a description as far as practical of the support facilities in terms of crude and product storage capacity, fire protection and personnel safety provisions, and methods for segregation, collection, treatment, and disposal of solid, liquid, and gaseous effluents.

3) a written operating history of a refinery for the previous 12-month period emphasizing crude-oil receipts and specifications, product slates produced, unusual operating experiences, routine maintenance performed, and emergencies encountered during operations.

24

4) a description of the method of electricity supply, whether entirely purchased, self-generated, or a combination of both; and a technical description of the design and operation of the power house (if any) in terms of energy balance and heat rate.

b. Refinery Financial Structure

The objective in this task will be to collect data on local practices from the refinery management and/or from other appropriate sources that can be evaluated to establish the basis whereby the cost of each improvement opportunity can be pragmatically estimated and attractiveness of the opportunity determined. The expectation is that attractiveness will be based in part on (a) the magnitude of the capital requirement, including the foreign exchange component, and (b) the period of time within which the cost of the improvement can be recovered through savings in operating costs achieved. Attractiveness shall refer also to quantification (if practical) of benefits from reduced emissions of objectionable effluents. No need exists to relate emissions for compliance with any existing standards.

c. Selection of the Refineries

The refineries to be subjected to more detailed study, in order to meet Objectives b, c, and d above, shall be selected during the reconnaisance period by mutual agreement between the Contractor and the host-government agency concerned. For Contractor's guidance, the main criterion for selection should be based on achieving a maximum efficiency/environmental improvement impact for a minimum effort and cost in a minimum time frame. However, the selection shall be subject to A.I.D. concurrence.

d. Refinery Housekeeping

For each country and for each selected refinery, the work involves observation over a period of time of the refinery operations in order to detect opportunities to improve operating and maintenance practices, such as by

1) eliminating the presence of leaky valve-stems and steam traps,

2) incrementally insulating excessively hot surfaces,

3) avoiding poor combustion conditions (high oxygen content in chimney gases because of excessive excess air beyond combustion needs and/or leaky furnace settings),

4) avoiding excessive carbon monoxide in chimney gases (poor combustion, inadequate mixing of fuel and air),

5) increasing the frequency with which heat transfer surfaces are cleaned of fouling deposits,

6) reviewing whether rotating machinery is adequately maintained in terms of lubrication and condition of bearings, and

7) reviewing whether plant instrumentation is adequate and/or well-enough maintained to provide accurate readings of operating conditions and is appropriately configured to permit efficient operation.

e. Heat Conservation

The work involves observations over a period of time to evaluate the adequacy of provisions to recover heat that otherwise is wasted. The best example is a lack of airheaters to recover heat from hot chimney gases in refinery furnace equipment. Another example is the design of feedstock preheat heat exchanger trains and the opportunity to introduce an additional heat exchanger that can be justified now because of higher energy prices.

f. Process Unit Operating Conditions

The work involves analyzing the operating conditions and control systems installed for each processing unit in a selected refinery in order to determine whether these are appropriate for the products from the feedstock. This analysis can be particularly significant if current feedstocks and/or product slates have changed from the conditions on which the original design of the processing unit was based.

g. Refinery Energy Balance

The work involves analysis of the flows of energy among the different processing units comprising each selected refinery as well as within the processing units themselves in order to identify opportunities for energy-efficiency improvement in the short term and long term.

227

The analysis should attempt to provide a data base to assist others to foresee the longer term opportunities for a more efficient energy balance through review of the market demand, future crude oil supplies, and the design and applicability of the processing units themselves. Ultimately, the product of such analysis by others could be decisions to abandon certain units, modify others, or add new units, all providing for greater thermal efficiency.

Accordingly, the Contractor shall attempt to foresee as far as practical the prospect that such future analysis could invalidate the benefits perceived for an identified long-term opportunity from a presumption that a substantial remaining useful life for the process unit exists.

h. Fuel Switching

For each selected refinery, the work shall include comment and expert opinion on the practicality of replacing petroleum hydrocarbon fuels with indigenous coal. Refinery furnaces have in the past been fired with coal. Fuel switching to coal to save on oil imports could be a viable option. However, the Contractor shall focus on a different technical option for coal utilization, in order to reduce investment, by considering high fuel-density, coal/water slurry fuels as a direct replacement for fuel oil with minimum retrofit. Sootblowers could handle the higher ash content.

Consideration of such an option should be limited to assessing its practicality in terms of coal supply and characteristics, the state-of-the-art of fuel formulation, and adaptability to existing combustion equipment.

i. Refinery Emissions

For each selected refinery, the work involves preparing a survey of all solid, liquid, and gaseous refinery effluents in terms of sourcing, probable quantities, and chemical analyses, and suggesting practices to be employed in the refinery for control to reduce such emissions that reflect experiences elsewhere where emission control laws are in effect. There is no need to relate this task to showing compliance of emissions with standards that may be established by the World Bank or the U.S. Environmental Protection Agency.

j. Data Evaluation

The work involves computer-oriented organization of the data and information collected, evaluation of the data and information, compiling cost estimates, performing financial calculations, ranking opportunities in terms of the adopted criteria, and preparing final reports to meet the objectives of the work.