PN-ABN-557

U.S. Agency for International Development

A Report of the Office of Energy and Infrastructure

ENERGY FROM SAWMILL WASTE IN HONDURAS

TEUPASENTI CASE STUDY

Bureau for Research and Development
U.S. Agency for International Development
Washington, D.C. 20523-1810

Report No. 93-01

A Report of

USAID/Tegucigalpa
and the
Office of Energy and Infrastructure
Bureau for Research and Development
United States Agency for International Development

ENERGY FROM SAWMILL WASTE IN HONDURAS

TEUPASENTI CASE STUDY

Prepared by

Winrock International Institute for Agricultural Development
1611 North Kent Street, Suite 600
Arlington, VA 22209-2134

Biomass Energy Systems and Technology Proje
DHR-5737-A-00-9058-00

January 1993

This publication was made possible through support provided by the Office of Energy and Infrastructure, Bureau for Research and Development, U.S. Agency for International Development. The opinions expressed herein are those of the author(s) and do not necessarily reflect the views of the U.S. Agency for International Development.

ACKNOWLEDGEMENTS

Like the broader survey of energy potential from sawmill wastes that preceded it, this case study, funded by USAID/Tegucigalpa and the Bureau for Research and Development, Office of Energy and Infrastructure, U.S. Agency for International Development, was organized and led by Jim Wimberly of Winrock International beginning in October 1991. Brad Holloman, also of Winrock, assumed responsibility for the project, including integration of the analysis and editing the report, in February 1992. The project team also included Kelton Grubbs of Thermal Systems Engineering, Inc., an expert in wood energy system design and engineering, and Gregory Morris of Future Resources Associates, Inc., an expert in energy project planning and financial analysis. Fay Ellis at Winrock assisted with editing and producing the report.

The project team thanks the many people and organizations in Honduras who made the study possible. Among these were Ricardo Lima, owner of the sawmill at Teupasenti; Danilo Escoto and Mateo Molina of the Corporación Hondureña de Desarollo Forestal; and Frederico Brevé, the manager of the Empresa Nacional de Energía Eléctrica. The authors are indebted to Oscar Danilo Sierra and his staff at ICA Inversiones for their engineering and cost estimating assistance, and the project could not have taken place without the support and encouragement of Jack Jordan at the USAID mission in Tegucigalpa and Ramon Alvarez and Doyle Romans of the USAID Forestry Development Project Team.

TABLE OF CONTENTS

ACKNOWLEDGEMENTS 3

EXECUTIVE SUMMARY 7

1.0 INTRODUCTION 9

2.0 RAW MATERIAL SUPPLY AND FORESTRY CONSIDERATIONS 11

3.0 DESIGN BASIS FOR BOILER AND GENERATOR SYSTEMS 13
- 3.1 General Comments 13
- 3.2 Energy Requirements of Existing Operation 13
- 3.3 Fuel Availability 15
- 3.4 Equipment Selection 18
  - 3.4.1 Boilers 18
  - 3.4.2 Combustion Systems 18
  - 3.4.3 Prime Movers 18
  - 3.4.4 Condensing Equipment 19
- 3.5 Environmental Effects 20
- 3.6 System Capacity 21
- 3.7 Kiln Drying Options 23
- 3.8 Configurations of Wood Energy and Dry Kiln Systems 25
  - 3.8.1 Option I 25
  - 3.8.2 Option II 25
  - 3.8.3 Option III 27
  - 3.8.4 Option IV 27
  - 3.8.5 Option V 27
  - 3.8.6 Option VI 27

4.0 EXPECTED SYSTEM PERFORMANCE 29

5.0 ESTIMATED COST OF PROPOSED SYSTEM CONFIGURATIONS 35

6.0 FINANCIAL PROJECTIONS AND RETURNS FOR TEUPASENTI PROJECT . 37
- 6.1 Method of Analysis, Description of Model 37
- 6.2 Assumptions Used in the Analysis 37
- 6.3 Results of Analysis for Base Configurations 40
- 6.4 Sensitivity Analysis on the Six Base Configurations 42

7.0 STRATEGIES FOR PROJECT IMPLEMENTATION 43
- 7.1 Steps in the Development of a Wastewood Energy Project 43
- 7.2 The Feasibility Study 44
- 7.3 Potential Sources of Financing 46
- 7.4 Activities Required for Implementation After Funding 49

8.0 CONCLUSION 50

Previous Page Blank

APPENDIX A: Cogeneration System and Drying Kiln Design Drawings

APPENDIX B1: Detailed Cogeneration System Costs

APPENDIX B2: Capital Cost Currency Breakdown

APPENDIX C1: Detailed Economic Simulation, Option I, Peaking System Without Kiln

APPENDIX C2: Detailed Economic Simulaton, Option II, Peaking System With Single Track Kiln

APPENDIX C3: Detailed Economic Simulation, Option III, Peaking System With Double Track Kiln

APPENDIX C4: Detailed Economic Simulation, Option IV, Baseload System Without Kiln

APPENDIX C5: Detailed Economic Simulation, Option V, Baseload System With Single Track Kiln

APPENDIX C6: Detailed Economic Simulation, Option VI, Baseload System With Double Track Kiln

ENERGY FROM SAWMILL WASTE IN HONDURAS
TEUPASENTI CASE STUDY

EXECUTIVE SUMMARY

This case study follows a more general assessment, completed in 1991, of the nation-wide potential for energy production from sawmill wastes in Honduras, and it presents a detailed examination of waste-wood energy options for a three million board-feet per year sawmill located in Teupasenti, El Paraíso Department. While waste-fired cogeneration is generally economical at larger installations, the vast majority of Honduran mills produce less than five million board-feet per year, so the purpose of this study is to establish whether a waste-wood energy system at a small sawmill is a profitable investment. If so, small sawmill owners throughout the country would have the opportunity to enhance their profits and at the same time provide needed electric power, environmental improvements, and rural employment.

Of six alternative energy-system configurations developed for the Teupasenti sawmill site, three are designed for electricity production only during hours of peak-demand as defined by Empresa Nacional de Energía Eléctrica (ENEE), the national electric utility company, and three others are designed for continuous electricity generation, with operation timed to maximize output during peak times while maintaining efficient generation during off-peak hours. Both systems maximize peak period power generation, because of ENEE's expressed need for peak generating capacity in the future. The continuous operating system design is large enough to provide the sawmill with all of its peak power demand requirements (250 kW), in order to allow the facility to operate at full capacity during utility outages. All energy system designs provide for complete utilization of all of the wastewood produced by the sawmill.

Under each of the two electric output schemes just described, the three remaining categories reflect alternative amounts of steam-heated lumber drying as part of the sawmill's operation. Dry kilns are relatively rare in Honduras, where most lumber products are sold in green form. However, they offer several important benefits to sawmills, including cost savings on shipments, higher-grade lumber products with improved quality, and easier access to export markets that restrict entry of green lumber. For all of these reasons, as well as the fact that installation of a wastewood-fired energy system automatically provides a source of steam that can be used to heat a dry kiln, it is likely that any sawmill that is contemplating a wastewood energy system would also consider a dry kiln as part of the total energy system. For the purposes of this case study two dry kiln designs are considered, one that is sized to dry all of the high-grade lumber produced by the sawmill (single track), and one that is sized to dry all of the sawmill's primary lumber (double track). The option of not drying lumber also is included among the alternatives.

Financial analysis indicates that none of the of the six base-case system configurations meets acceptable investment criteria, defined here as a minimum real return on total investment of ten percent per year. The return calculation is predicated on an assumed price for exported power that ENEE might consider advantageous to pay, based on estimated utility avoided cost for generation. It does not reflect any possible net savings to the local transmission and distribution system, nor does it take into account environmental quality improvements and other economic externalities.

At higher prices, which may prevail in the future as avoided costs increase, or as national policy intervenes to promote wastewood cogeneration for its social and environmental benefits, this and other power generation projects like it could be more advantageous. For the system to break even at a ten percent per year real cost of capital, the utility would have to pay an average of between Lempiras (Lps.) 0.68 and Lps. 1.15 per kilowatt hour for surplus power at the sawmill. If ENEE were prepared to pay a level Lps. 800 annually per kilowatt for the sawmill's contribution to generating capacity, the system would then require a more modest, but still substantial Lps. 0.55 to Lps. 0.95 per kilowatt hour to provide the same return on investment.[1]

The capital costs of all of the system configurations are based on the purchase of new equipment for all components. Extensive use of high-quality, reconditioned used equipment could allow a drop in total project capital cost of as much as thirty percent of the levels estimated for the base-case configurations. Cost savings of this magnitude could make some configurations profitable at today's ENEE avoided costs, provided system reliability and longevity are not significantly compromised.

At capacities between 300 and 475 kilowatts, the systems considered here suffer from adverse scale economies and from the fact that they represent high capital, low fuel cost options, which are generally profitable only if they produce revenues all day throughout the year. If a generator operates only intermittently or must compete with low-cost hydropower for much of the time, it will not easily pay for itself. Larger-scale systems may represent more viable investment opportunities for the handful of much larger sawmills in Honduras, especially if they are credited with the variety of additional benefits they could provide, including:

- Improved disposal of solid wastes, with reductions in air and water pollution.
- Decreased dependence on imported fossil fuels.
- Reduced need for the development of new electric generating capacity on the part of ENEE.
- Development of rural employment and industrialization opportunities.

1 The assumed exchange rate in this study is Lps. 5.83 per US$ (1992).

ENERGY FROM SAWMILL WASTE IN HONDURAS
TEUPASENTI CASE STUDY

1.0 INTRODUCTION

The Honduran wood-products industry, which obtains most of its energy in the forms of imported petroleum products and utility electricity, produces large quantities of energy-rich wood wastes that are not used for any purpose. These wastes could provide the sawmills with all of their energy requirements, reduce the sawmill's burden on the environment, and provide surplus electricity, process steam, or solid fuels for the national economy. Realizing this potential, however, will require investment capital to install wastewood energy systems at the individual sawmills in Honduras.

The first phase of our effort to understand and identify the role that wastewood energy systems could play in Honduras involved a national-scale industry overview assessment, which was completed in March, 1991 (*Energy from Sawmill Wastes in Honduras: Industry Overview*, USAID Office of Energy, Bureau for Science and Technology, Biomass Energy Systems and Technology Project. Report No. 91-05). This report concludes that wastewood energy systems for Honduran sawmills have the potential to be viable investments and to provide substantial economic and environmental benefits to Honduras.

The second phase of this effort, which is described in this report, involves a detailed case study of a possible wastewood energy system for a specific Honduran sawmill, "Maderas de Oriente" in Teupasenti, El Paraíso Department. This facility, with an annual production capacity of approximately three million board-feet (3,000 mmbf), was selected for the development of the case study because its small size is representative of a large number of operations identified in the Industry Overview Study and because the mill owner was willing to devote significant time and resources to providing the study team with complete and accurate information. The project team's hope was that a favorable conclusion would serve to promote cogeneration investments at this mill and also at other mills of equal or larger size throughout Honduras.

In this report, we describe six alternative project configurations for the Teupasenti sawmill site. All of the configurations are designed to utilize all of the waste produced by the sawmill. Variations are based on two different approaches to providing peak energy production for the sawmill and for the national utility company and on two different dry kiln designs that could be integrated with the energy system into the sawmill operation. The optional energy system configurations are described and analyzed, and the process of developing these plans into an operating project are discussed.

2.0 RAW MATERIAL SUPPLY AND FORESTRY CONSIDERATIONS

The Maderas De Oriente sawmill processes exclusively pine wood into lumber products. All of the raw pine logs are obtained from the Teupasenti forest district under permits granted by the Corporación Hondureña de Desarrollo Forestal (COHDEFOR), which controls all forest resources in the country on both private and public land. The Teupasenti forest district contains almost forty thousand hectares that are available for the use of the sawmill. Based on the Forest Management Plan prepared by COHDEFOR in 1990, the estimated annual available cut for the next 40 years, and, indeed, in perpetuity, is nearly 30 percent more than the amount now being harvested, even without bringing current brush land into timber production. Even though actual cutting has been 7.5 percent under this estimate for the first 15 months since the Management Plan was prepared, the sawmill has enjoyed a surplus of more than 20 percent above its needs, at the present primary production capacity of approximately three million board feet per year.

Log harvest and lumber production vary throughout the year, with the maximum roughly twice the minimum (see section 3.2). While part of this variation is related to weather and the condition of roads, some is not. For example, in 1990, the months of November and December had the lowest production levels at the Teupasenti sawmill, even though these months are not in the wet season.

COHDEFOR regulations require mill owners to cut only marked trees, leave twelve seed trees per hectare, protect regeneration, thin stands as needed, provide intensive protection from insects, disease, and fire, burn or remove all logging slash, spread slash in contour rows on cleared landings and skid trails, divert runoff water from denuded areas, and construct and maintain roads in such a way as to minimize erosion and water contamination. While regulation may protect the forest and the environment from overexploitation and abuse, the fact that a license to operate a sawmill and a contract to harvest trees are issued only on an annual or shorter basis poses a significant risk to individual mill owners and to potential investors in any contemplated mill improvements. The working assumption in the industry is that licenses and contracts will be reissued as needed, but longer term guarantees may be necessary for forest industry-based energy development to occur.

Previous Page Blank

3.0 DESIGN BASIS FOR BOILER AND GENERATOR SYSTEMS

3.1 General Comments

Although tailored to conditions at the Teupasenti site, the assumed energy conversion systems are based on the same technologies that were described in the industry overview report, and the dry kiln designs are conventional, embodying equipment available in Honduras today. The application to a specific sawmill site allows realistic conditions to be used for specifying the system design, resulting in more reliable cost and performance estimates. While the systems described in this report are designed specifically for the Teupasenti sawmill, the major components, scaled appropriately, are suitable for the majority of sawmill operations in Honduras.

3.2 Energy Requirements of Existing Operation

The sawmill at Teupasenti converted from diesel generators to the electric utility as their source of power early in 1991, and unfortunately, reliable information has been impossible to obtain on the power consumed since the conversion. However, the mill has maintained complete records on the amount of diesel consumed by the generator sets in prior years, so operating information from year 1990, which was reasonably typical, served as the basis for sizing the electrical generating and lumber drying equipment considered in this case study. These data are summarized in Table 3.1.

Diesel generator unit number D 333 is a 90 Kw, 240/480 volt, 3 phase, synchronous generator, driven by a 140 horsepower, Caterpillar, diesel engine. Diesel generator unit D 343 is a 240 Kw, 240/480 volt, 3 phase, synchronous generator, driven by a 360 horsepower Caterpillar, diesel engine. Expected performance parameters for both of these units, obtained from J.A. Riggs Tractor Company in Little Rock, Arkansas, are displayed in Table 3.2.

According to the owner of the mill, the larger diesel unit, unit D 343, was only operated when the mill was in operation during 1990. The smaller unit, unit D 333, was operated approximately one-half of the time that the mill was in operation, and roughly four hours each evening to provide about five Kw for plant lighting and miscellaneous domestic loads. Based on this operating schedule and the expected diesel unit performance data, the electrical output of these units was determined for each month during 1990. This information, displayed in Table 3.3, represents the electrical energy requirements of the sawmill as reflected in the operating profiles of the generating system configurations considered in this study.

Previous Page Blank

TABLE 3.1
TEUPASENTI SAWMILL - 1990 OPERATING SUMMARY

MONTH/YEAR	LOGS REC'D (M3)	LOG INVENTORY (M3)	LOGS CONSUMED (M3)	MILL OPERATION (HRS)	#1 GRADE PRODUCTION (MBF)*	#2 GRADE PRODUCTION (MBF)*	TOTAL PRODUCTION (MBF)*	CONSUMED BY UNIT D 333 (GALLONS)	CONSUMED BY UNIT D 343 (GALLONS)
JANUARY/90	572.57	0	1065.5	203	39,325.00	245,738.00	285,063.00	845	1668
FEBURARY/90	1284.05	250.48	1033.57	205	50,625.00	227,146.00	277,771.00	690	1662
MARCH/90	1864.16	740.4	1374.24	233	54,142.00	265,831.00	319,973.00	643	2165
APRIL/90	1488.51	1245.48	983.43	181	34,125.00	227,293.00	261,418.00	660	1420
MAY/90	1092.77	1088.56	1249.69	234	60,527.00	257,681.00	318,208.00	720	1800
JUNE/90	437.04	297.52	1228.08	234	15,686.00	295,117.00	310,803.00	780	1620
JULY/90	1113.51	243.57	1167.46	192	12,074.00	273,686.00	285,760.00	700	1260
AUGUST/90	1024.27	23.78	1244.06	202	39,403.00	259,522.00	298,925.00	710	1305
SEPTEMBER/90	942.88	7.59	959.07	176	28,966.00	190,436.00	219,402.00	390	1113
OCTOBER/90	942.41	84.48	865.52	184	33,385.00	143,318.00	176,703.00	490	1095
NOVEMBER/90	414.88	18.86	480.5	195	34,292.00	70,539.00	104,831.00	260	1165
DECEMBER/90	561.11	11.79	568.18	161	29,044.00	98,834.00	127,878.00	210	1040
TOTAL for YEAR	11738.16 -		12219.3	2400	431,594.00	2,555,141.00	2,986,735.00	7098	17313

*MBF=million board feet

TABLE 3.2: TEUPASENTI SAWMILL
EXPECTED PERFORMANCE OF DIESEL GENERATORS

UNIT D 333				UNIT D 343			
GENERATOR OUTPUT (KW)	FUEL CONSUMED (Lb/Hp-Hr)	ENGINE INPUT (Btu/Hr)	UNIT HEAT-RATE (Btu/KWH)	GENERATOR OUTPUT (KW)	FUEL CONSUMED (Lb/Hp-Hr)	ENGINE INPUT (Btu/Hr)	UNIT HEAT-RATE (Btu/KWH)
90	0.357	968,641	10763	240	0.366	2,571,955	10,716
80	0.355	852,340	10654	220	0.365	2,344,059	10,655
70	0.355	748,397	10691	200	0.365	2,137,440	10,687
60	0.355	644,452	10741	180	0.367	1,934,237	10,746
50	0.355	540,509	10810	160	0.37	1,740,598	10,879
40	0.355	443,494	11087	140	0.375	1,551,840	11,085
30	0.37	353,898	11797	120	0.382	1,364,565	11,371
20	0.413	282,161	14108	100	0.392	1,193,687	11,937

NOTE: Engine input and heat-rate are based on diesel fuel heating value of 19,520 Btu/Lb.

3.3 Fuel Availability

Each of the systems considered would utilize all of the residuals produced by the sawmill, and production records for the mill were accurate enough to permit the use of a material balance approach to estimating the volume of waste produced. Table 3.4 presents the log volume processed and the quantities of lumber and secondary products produced for each month of 1990.

The difference between the log volume and the product volume is the quantity of solid wood that is converted to green waste in the sawmill. The product volume is adjusted to reflect the actual dimensions of each production category. Log volume is based on the log diameter inside the bark and does not include the bark volume. For estimation purposes, bark is assumed to be seven percent of the log volume. In addition to bark and green waste, a significant quantity of waste is produced by a surfacing operation that processes approximately ninety-five percent of the number 2 grade lumber produced. This material is identified as dry waste because for the system configurations that include a kiln drying operation, this dry waste is assumed to be kiln dried.

Energy availability is based on an average heating value of 9950 btu per pound of dry wood fiber, after appropriate accounting for the weight of moisture. Although variations in the average moisture content of the total waste stream could have an effect on boiler efficiency and rating, the impact should not be so large as to affect the conclusions of the study.

TABLE 3.3
TEUPASENTI SAWMILL - 1990 ELECTRICAL REQUIREMENTS

	UNIT D 333				UNIT D 343				MILL TOTALS			
MONTH/YEAR	OPERATING TIME w/o MILL (HOURS)	OPERATING TIME w/ MILL (HOURS)	ELECTRICITY PRODUCED w/o MILL (KWH)	ELECTRICITY PRODUCED w/ MILL (KWH)	OPERATING TIME w/o MILL (HOURS)	OPERATING TIME w/ MILL (HOURS)	ELECTRICITY PRODUCED w/o MILL (KWH)	ELECTRICITY PRODUCED w/ MILL (KWH)	ELECTRICITY REQUIRED w/o MILL (KWH)	ELECTRICITY REQUIRED w/ MILL (KWH)	AVERAGE LOAD w/o MILL (KW)	AVERAGE LOAD w/ MILL (KW)
JANUARY/90	124	101.5	620	8,554	0	203	0	18,962	620	27,517	5.00	135.55
FEBURARY/90	112	102.5	560	6,687	0	205	0	18,671	560	25,358	5.00	123.70
MARCH/90	124	116.5	620	5,737	0	233	0	26,039	620	31,776	5.00	136.38
APRIL/90	120	90.5	600	6,144	0	181	0	15,476	600	21,620	5.00	119.45
MAY/90	124	117.0	620	6,790	0	234	0	19,245	620	26,035	5.00	111.26
JUNE/90	120	117.0	600	7,698	0	234	0	15,414	600	23,111	5.00	98.77
JULY/90	124	96.0	620	6,587	0	192	0	11,173	620	17,760	5.00	92.50
AUGUST/90	124	101.0	520	6,707	0	202	0	11,316	620	18,023	5.00	89.22
SEPTEMBER/90	120	88.0	600	2,170	0	176	0	9,348	600	11,518	5.00	65.44
OCTOBER/90	124	92.0	620	3,724	0	184	0	7,792	620	11,516	5.00	62.59
NOVEMBER/90	120	20.0	600	904	0	195	0	8,411	600	9,315	5.00	47.77
DECEMBER/90	124	4.0	620	187	0	161	0	9,017	620	9,204	5.00	57.17

TABLE 3.4
TEUPASENTI SAWMILL - 1990 WASTE PRODUCTION

MONTH/YEAR	LOGS CONSUMED (M3)	#1 GRADE PRODUCTION (MBF)	#2 GRADE PRODUCTION (MBF)	TOTAL LUMBER PRODUCTION (MBF)	WASTE PRODUCTION SECONDARY PRODUCTS (MBF)	BARK (TONNES)	GREEN WASTE (TONNES)	DRY WASTE (TONNES)	TOTAL ENERGY AVAILABLE (MMBtu)
JANUARY/90	1065.50	39,325	245,738	285.063	18,415	74.59	440.78	71.06	6,786.07
FEBURARY/90	1033.57	50,625	227,146	277,771	45,308	72.35	355.74	65.68	5,743.08
MARCH/90	1374.24	54,142	265,831	319,973	29,297	96.20	648.97	76.87	9,399.18
APRIL/90	983.43	34,125	227,293	261,418	24,380	68.84	393.58	65.72	6,120.24
MAY/90	1249.69	60,527	257,681	318,208	43,326	87.48	492.48	74.51	7,549.58
JUNE/90	1228.08	15,686	295,117	310,803	38,459	85.97	513.67	85.33	7,938.10
JULY/90	1167.46	12,074	273,686	285,760	62,174	81.72	448.25	79.14	7,075.15
AUGUST/90	1244.06	39,403	259,522	298,925	23,718	87.08	579.25	75.04	8,505.43
SEPTEMBER/90	959.07	28,966	190,436	219.402	17,927	67.13	469.88	55.07	6,768.38
OCTOBER/90	865.52	33,385	143.318	176,703	35,299	60.59	418.61	41.44	5,916.93
NOVEMBER/90	480.50	34,292	70,539	104,831	26,926	33.64	195.89	20.40	2,842.81
DECEMBER/90	568.18	29,044	98,834	127,878	40,570	39.77	207.52	28.58	3,168.16
TOTAL for YEAR	12219.30	431,594	2,555,141	2,986,735	405,799	855.35	5164.64	738.83	77,813.12

3.4 Equipment Selection

3.4.1 Boilers

At a boiler rating well under 30,000 pounds per hour steam generation, the most economical boiler selection is usually a fire-tube unit with a maximum operating pressure of less than 200 pounds per square inch/gauge (psig). Therefore, it was decided that the economic evaluations for this study should be based on a systems designed around this type of boiler.

The other type of boiler that could be considered is a water tube design. This type of boiler provides a much wider range of operating conditions and configurations. However, in the size range considered in this study, water-tube boilers are considerably more expensive than fire-tube units, and the additional system efficiency that could be achieved with higher pressure steam conditions would have to justify the added cost. It should also be noted that mills in Honduras with existing boiler operations are utilizing boilers of the fire tube type, with operating pressures less than or equal to 200 psig.

3.4.2 Combustion Systems

The presence of random-sized solid wood pieces in the residual stream make it impossible to use combustion systems that incorporate automatic, precise control of the fuel feed rate. In fact, the only system that can use this material without further processing is a balanced, or negative draft furnace that has provisions for manually firing the larger pieces through the furnace doors. This type of furnace can also be equipped with a conveyor system that will deliver the sawdust and smaller pieces to the furnace through a feed chute in the roof or upper sidewall. The conveyor system can be equipped with a hopper that will hold a fuel reserve and allow the operator to regulate the firing rate by starting and stopping the conveyor, as well as by adjusting the rate at which the larger pieces are fed to the furnace. While a combustion system of this type is not nearly as efficient as a more automated system, it is much less expensive and is consistent with the philosophy of substituting manpower for mechanical/electrical power when practical.

3.4.3 Prime Movers

The choice of a prime mover for the generator is limited to either a steam engine or a single-stage steam turbine. Multi-stage steam turbines are not competitive in the size range being considered in this study, and are probably too sensitive to allow reliable operations for installations in the prevailing sawmill environment in Honduras.

Historically, steam engines frequently have been selected for applications of this type and are utilized at the Honduran sawmills currently generating electricity from wood wastes. Steam engines have the advantage of a slightly higher operating efficiency and better off-load performance. However, steam engines have the disadvantage of being more expensive than single-stage turbines. Also, the exhaust from a steam engine is

is contaminated with lubricating oil and not suitable for reuse as boiler feedwater. Therefore, steam engines have the added disadvantage of higher make-up water requirements, which is not consistent with the perceived need to design these systems to conserve water.

3.4.4 Condensing Equipment

Having selected a single-stage turbine as the prime mover for the generator, a determination of the type of condensing equipment to be used for exhaust steam recovery must also be made. Either an air-cooled condenser or a water-cooled, surface condenser would be suitable for this service. There are no technical considerations that would favor either of these system configurations. Therefore, the selection of the most suitable system design should be based on an economic assessment of the value of the electrical output versus the installed and operating costs of the systems.

Air-cooled condensers are not usually economical for use with turbines operating at vacuum exhaust conditions. However, operation of the turbine at higher exhaust pressure has a significant, detrimental impact on the overall system efficiency (i.e. the electrical output achieved from a given fuel quantity is significantly reduced). Preliminary investigations indicate that there is more than sufficient fuel available to produce the electricity required by the sawmill and powerhouse operations. Therefore, the only factor that can justify the added cost and water consumption of a water-cooled condenser is the value of excess electricity produced for off-site sales. It was decided that this study, which anticipates electricity sales, would reflect the more expensive, energy efficient system designed with the turbine operating at a vacuum exhaust and configured to operate with a water-cooled, surface condenser. This will require the installation of condensate pumps, cooling water pumps, a cooling tower and condensate flow controls. This basic energy efficient system arrangement is shown schematically in Figure 3.1.

FIGURE 3.1: ENERGY EFFICIENT SYSTEM SCHEMATIC DIAGRAM

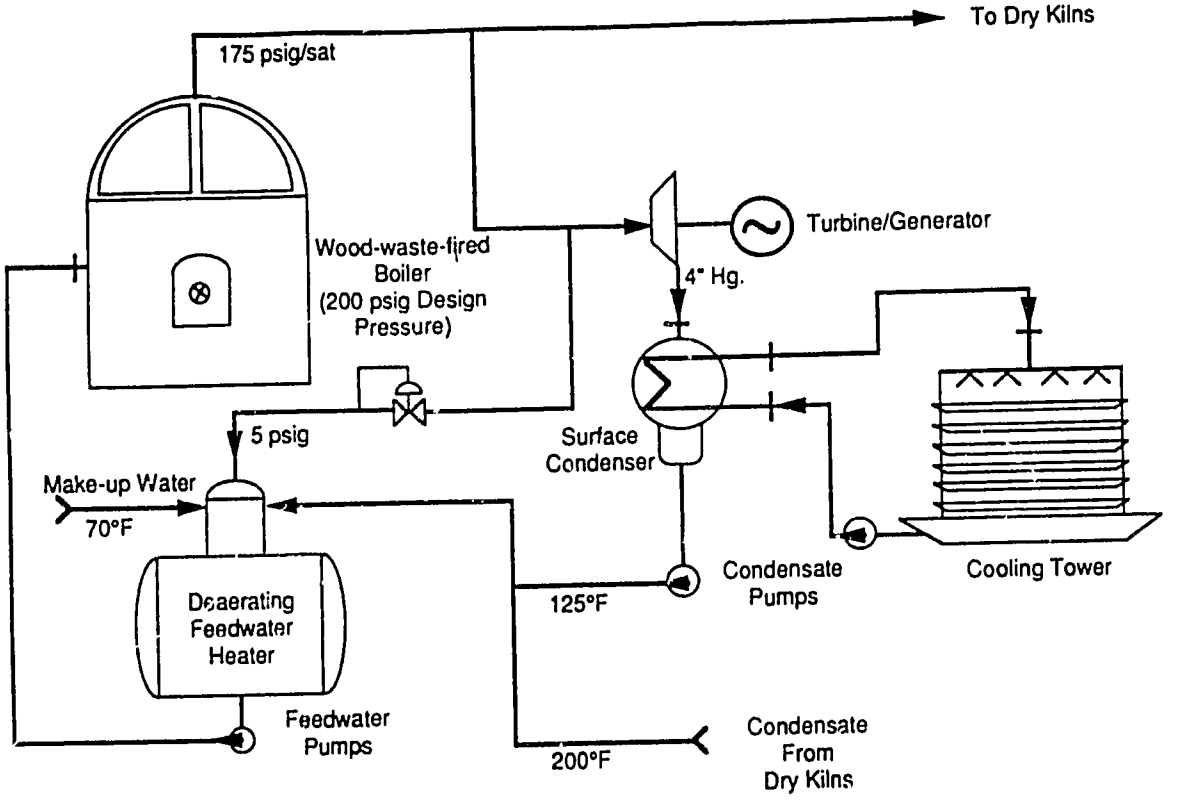

3.5 Environmental Effects

Current waste disposal practice at the Teupasenti sawmill, which is nearly universal in Honduras, involves open burning of sawmill wastes in smoldering piles near the sawmill site. This produces an almost constant presence of ground level smoke and haze. Water run-off from exposed piles of unburned and partially burned wood waste contaminates nearby streams and impoundments. Ground water contamination may also result from leaching of tannic acids resulting from biological degradation of sawmill wastes.

Utilization of these residuals for energy production will eliminate the piling and open burning of waste wood. If only this benefit is considered, installation of wastewood energy systems will reduce significantly the environmental degradation caused by current wastewood disposal practices at Honduran sawmills.

The boiler systems considered in this study are manually fired, fire tube boilers that are not equipped with automatic combustion controls or post-combustion emission control devices. These systems are very similar to the boiler systems utilized by the sawmill industry in the U.S. until environmental concerns made it necessary for U.S. sawmills to upgrade the systems by adding combustion controls and emission control equipment. This type system appears to be most compatible with the current technical and economic status of the sawmill industry in Honduras and was therefore selected as the design basis for the systems considered in this study.

Experience with similar systems in the U.S. indicates that the Teupasenti boiler system will produce the emission levels identified in the following tabulation.

Pollutant	Annual Emission (tons/year)
Particulate	110
Carbon Monoxide	160
Oxides of Nitrogen	35

Addition of combustion controls and particulate emission control equipment will reduce the particulate and carbon monoxide emissions. However, this equipment will not only add to the installation and operating cost, it will increase the level of technical expertise required to achieve reliable operation of the boiler systems.

A multiple cyclone collector installed as part of the boiler outlet package will reduce the particulate emissions to approximately 20 tons/year. Addition of this equipment will increase the installation cost by approximately $US 25,000.00 and will increase the electrical consumption of the powerhouse auxiliaries by approximately 110,000 kWh per year.

Addition of combustion controls can reduce the carbon monoxide emissions to approximately 55 tons/year. However, this modification involves not only installing the instrumentation and control devices, it also requires the installation of equipment to automatically meter fuel and air to the boiler furnace and it requires that all of the fuel be sized so that it can be delivered by the metering equipment. Since a large percentage of the fuel is presently generated in slab form this means that a hog or pulverizer will have to be installed to size the fuel. All of these increase the electrical consumption by as much as 240,000 kWh per year.

3.6 System Capacity

Because of the assumption that grid connected systems will be tied into a distribution network that can consume all of the excess electricity produced by the generating plant, the selection of the most suitable design for these systems is solely dependent on an evaluation of the value of the excess electricity versus the installed and operating costs of the system. Information developed in the overview study indicated that the most economically viable configuration for the boiler and generator was a design

that utilized all of the waste produced by the sawmill operation and maximized electrical power generation. However, the overview study did not evaluate such issues as the impact of peak and off-peak utility buy-back rates on the selection of the most viable system capacity. ENEE has informed us that they have a much greater need for additional power generating capacity during peak hours than during off-peak hours, and that they would be inclined to provide strong incentives mainly for peak power generation. This introduces the possibility that the wastewood energy system should be designed to maximize power production during peak hours.

Peak hours for the purposes of this study, as defined during discussions between the study team and ENEE, are as follows:

Weekdays: 8 in the morning until 10 in the evening

Saturdays: 12 noon until 10 in the evening

Sundays and Holidays: no peak hours

It is assumed, for the purpose of these calculations, that there are ten non-Sunday holidays per year in the Honduran Calendar, two of which fall on Saturdays. The exact distribution of the Honduran holidays in any given year has very little impact on the calculated avoided costs.

This study considers two different approaches to supplying the type of power desired by ENEE, while maintaining an efficient and viable investment for the sawmill. The first approach, which is the more radical one, involves designing the energy systems for operation during ENEE's peak hours only. The second approach involves designing the systems for continuous operation, with operation at the minimum level that is efficient during off-peak hours, and at the maximum level of power generation possible during peak hours. In the latter approach, the system is sized to be large enough to supply the sawmill's peak electrical demand, which is approximately twice as large as its average demand. In all cases the systems are operated to consume all of the biomass waste material that is generated at the sawmill, and in the four cases that include dry kilns, the boilers are operated continuously in order to provide a constant supply of steam to the kiln. For the purposes of this study, the first approach is labeled "peaking system," while the second approach is labeled "base-load system." In fact, both approaches involve designing and building energy systems that emphasize peak-power generation.

A system designed strictly for peaking operation would be capable of consuming all of the available fuel during the peak hours, and would be shut down during the off-peak time. In this scenario, power required for system auxiliaries and other mill loads will be purchased from ENEE during off-peak hours and only the fuel required to maintain the boiler in a hot stand-by condition will be burned during these hours. Allowing for a two week system outage during December and four non-Sunday holidays will result in the system being in operation approximately 3,936 hours per year. If the total fuel available is burned during these hours the average boiler input will be 19.75 mmBtu/Hr, and the average steam production will be approximately 10,750 lbs/Hr. Selecting the boiler for normal operation at 90 percent of rated capacity results in a

required boiler rating of 12,000 lbs/Hr. A generator system designed in accordance with the parameters developed in the overview study and matched to this boiler capacity should have a rating of 475 kW.

The alternative to a peaking system for this location is a system designed to consume the available fuel in approximately 8,400 hours per year. The minimum required boiler capacity in this case is 5,750 lbs/Hr, and the corresponding generator rating is 225 kW. A system of this size at Teupasenti would consume all of the fuel produced but, would not be large enough to replace the effective capacity of the existing 240 kW diesel generator. If there are no significant interruptions in the power supplied by the ENEE grid the short fall in capacity would not be a problem. However, should the grid fail the reduced on-site capacity might cause serious operating problems for the sawmill. In addition, ENEE has indicated that they are far more interested in purchasing power during peak periods than during non-peak periods. Therefore, it was decided that the continuously-operating system design should be sized to provide sufficient capacity to replace the 240 kW diesel generator. Because of the auxiliary power consumed by the boiler and generator equipment the generator should have a rated capacity of 300 kW in order to provide 240 kW for operation of existing equipment. The boiler rating that matches this generator rating is 7,750 lbs/Hr. This larger capacity will make it possible to operate this system in a manner that will produce significantly more electricity during peak periods than off-peak periods. It will be operated at approximately 90 percent of rated capacity during peak hours to take advantage of the higher rates paid for power sold during these periods. During off-peak hours the system will be operated at the highest level possible, subject to the availability of excess fuel not used during peak periods, or for the production of kiln steam during off-peak hours.

Because of the possibility of there being a significant difference in the economic viability of these two systems it was decided that operating and cost data should be developed for both systems so that a detailed economic comparison could be prepared. The cost information is presented in section 4.0 of this report.

3.7 Kiln Drying Options

As mentioned in the overview study, the installation of a wood energy conversion system at a sawmill provides the opportunity for installing steam-heated dry kilns that would not otherwise be installed.

The alternative to steam heated kilns is an indirectly heated kiln that utilizes a gas-to-air heat exchanger to transfer heat from a crude wood burner to the kiln environment. This kiln is very inefficient and difficult to control. While it is a reasonable and cost effective option for producing kiln dried lumber at mills that do not install wood energy systems, it is not an attractive lumber drying alternative for those mills that are planning to install a wastewood-fired boiler and steam-driven generator.

There are two possible designs for a kiln drying operation at the Teupasenti sawmill that need to be considered in this study. The first is the installation of a kiln

sized to dry only the No. 1 grade lumber production, which is approximately 432,000 board feet per year. About one-half of this lumber is sold to export markets, and the balance is shipped to a furniture and door factory that is also owned by the Lima family. Information provided by the owner indicates kiln drying would add approximately 250 Lps/mBF to the value of the exported lumber. Since the lumber that is shipped to the furniture and door factory must be kiln dried before use, the added value of kiln-dried lumber shipped to the factory would be equivalent to the savings realized by not having to dry this lumber at the factory. This savings is estimated to be approximately 175 Lps/mBF. However, consideration should be given to applying the added value of 250 Lps to all of the No. 1 grade production since lumber for the f[illegible] could possibly be obtained by purchasing green lumber from other mills in Ho[illegible] In addition to the added value, kiln drying will also produce a freight saving[illegible]imately 29 Lps/mBF for the export lumber and 17 Lps/mBF for the lu[illegible]ped to the factory.

The accepted drying schedule for high grade Pine lumber in Honduras is 6 to 7 days, depending on the lumber thickness. In order to provide flexibility for mixing lumber lengths in the kiln the minimum kiln size that is suitable for drying the expected high grade production from this mill is a single track kiln with an overall length of 34 feet. The lumber would be stacked in two 4-foot high packages on kiln trucks and moved into and out of the kiln on rails. Because of the relatively low temperatures required for the intended drying schedule a masonry building is completely acceptable and should be much less expensive to construct than the prefabricated structures typically used in the U.S. The circulating fans in the kiln should be selected to provide a slot velocity of approximately 500 FPM. This can be accomplished with three 1.5 Hp fans. The fans should be installed with the motors mounted outside of the kiln to improve motor life and provide for convenient maintenance. Heating coils should be mounted on either side of the fan deck and, because of the relatively low heat requirements, the coils can be fabricated to provide a total of 900 feet of 1-inch schedule 40 bare pipe. This type of coil can be fabricated in Honduras and should be less expensive than the extended surface coils normally utilized for this service. Preliminary arrangement drawings for this kiln can be found in Appendix A.

A kiln of this size will dry all of the high grade production in approximately 248 days per year. Rather than have the kiln stand idle for the rest of the time, it should be utilized to dry No. 2 grade lumber whenever it is available. This not only increases the utilization of the kiln but, based on information provided by the owner, it will also increase the amount of No. 1 grade lumber produced. This occurs because kiln drying introduces the possibility of upgrading approximately 10 percent of the No. 2 grade lumber that is kiln dried. In addition to the product upgrade, there will be a freight savings of approximately 19 Lps/mBF on all of the No. 2 lumber dried. Full utilization of this kiln will create an average steam demand of about 350 lb/Hr for the 7,320 hours per year that it will be in operation.

The second dry kiln option is the installation of a kiln sized to dry all of lumber production from this mill. The drying schedule for No. 2 lumber can be shortened to 3 or 4 days depending on thickness. Therefore, this kiln should be designed with sufficient

heating capacity to dry No. 2 lumber on the shorter schedule. Operating conditions would be adjusted to dry No. 1 lumber on the longer schedule. Additional benefits produced by this larger kiln will be the possible upgrade of 10 percent of the balance of the No. 2 lumber and a freight savings of approximately 19 Lps/mBF on this production.

The most economical configuration for this kiln will be a two track design with heating coils located between the tracks as well as the overhead coils used in the single track kiln. The total heating surface required is 4,830 feet of 1-inch schedule 40 pipe with 3,000 feet in the booster coil between the tracks. Four one-Hp fans will be required to circulate the air in the kiln. The average steam demand of this kiln will be 1,250 lb/Hr for the 7,650 hours per year that it operates. Preliminary arrangement drawings of this kiln are also contained in Appendix A.

3.8 Configurations of Wood Energy and Dry Kiln Systems

There are six possible combinations of the wood-energy conversion systems and the dry kilns that could be installed at the Teupasenti sawmill. Options 1-3 use the peaking energy system design, while options 4-6 use the continuous operating system design. Options 1 and 4 have no dry kiln, options 2 and 5 use the single-track dry-kiln design, and options 3 and 6 use the double-track dry- kiln design. Each configuration has a different impact on the amounts of electricity generated and the amounts of kiln dried lumber produced. Figure 3.2 shows graphically the weekday energy output profiles for options 1, 3, 4, and 6.

3.8.1 Option I

The first possibility is simply the installation of a wood energy conversion system designed for peaking service as described in section 3.6. This system would utilize a 12,000 lb/Hr boiler and a 475 kW generator to consume all of the available waste fuel, and produce electricity only during the peak hours when it has the highest value.

3.8.2 Option II

Since installation of a boiler system introduces the opportunity for installing steam heated dry kilns, option I must be compared with the two possible kiln systems that can be installed with this boiler system. The small quantity of steam required by the kilns is not sufficient to alter the required boiler or generator capacity. Therefore, this option consists of simply adding a single-track dry kiln to the wood energy system included in option I. Steam delivered to the generator will be reduced by the steam requirements of the kiln, thus reducing the amount of electricity produced. Also, since the generator is only operated during peak hours it will be necessary to purchase power from ENEE to operate the kiln and powerhouse auxiliaries during off-peak hours. It would not be efficient to operate the generator during off-peak hours to supply this small electrical load. Also, it will be necessary to provide operating labor to fire the boiler to produce steam for the dry kilns during the off-peak hours. The added value of the kiln dried lumber will have to offset the loss in electrical production and the additional operating costs.

FIGURE 3.2: WEEKDAY SYSTEM OUTPUT PROFILES

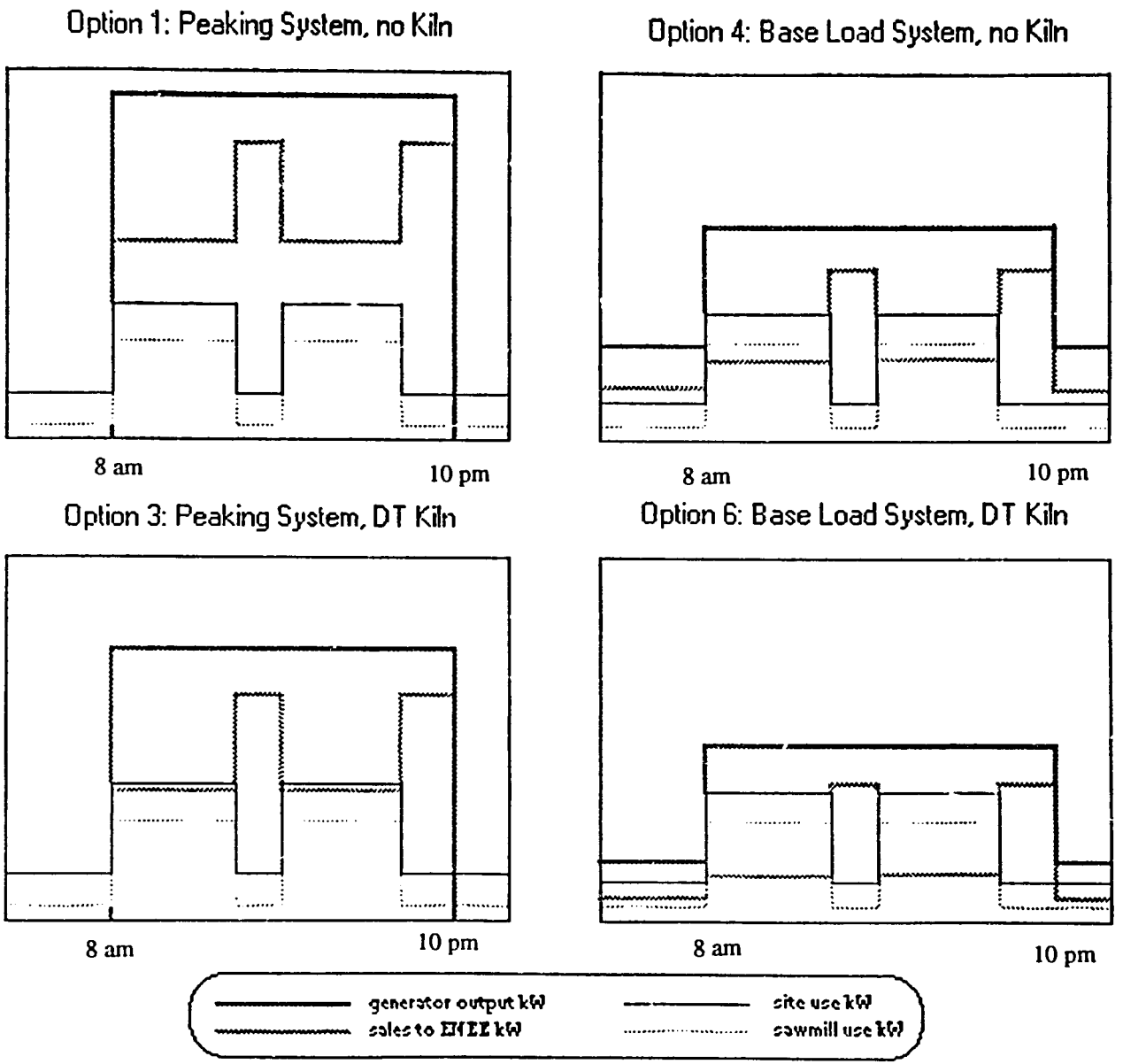

3.8.3 Option III

This option is simply the substitution of the double track kiln for the single track kiln included in option II. The only differences from option II will be a reduction in electrical production because of the higher steam demand of the kiln, a small increase in the amount of electricity purchased during off-peak hours, and the increased production of kiln dried lumber.

3.8.4 Option IV

As discussed in section 3.6, a reasonable alternative to the peaking type wood energy system is a smaller system designed for continuous operation that has sufficient capacity to operate the sawmill in the event of an outage of the ENEE grid. This would consist of a 7,750 lb/Hr boiler and a 300 kW generator operated at approximately 90 percent of capacity during peak hours and as required to consume the balance of available fuel during off-peak hours.

3.8.5 Option V

This option involves the addition of a single-track dry kiln to the continuously-operated type energy system in order to provide a direct comparison with option II. It should be noted that additional operating labor for the boiler during off-peak hours will not be required because the energy system is intended for continuous operation already.

3.8.6 Option VI

As in option V, this option involves the addition of a double-track dry kiln to the base load type energy system in order to provide a comparison with option III.

As previously noted, all of these options have different impacts on installation cost, electrical sales, electrical purchases and kiln dried lumber production. The impact on expected performance (sales, purchases and production) is discussed below in section 4, and the differences in installed cost are presented in section 5.

4.0 EXPECTED SYSTEM PERFORMANCE

All of the system configuration options considered in this study are designed to convert the energy in the residuals produced by the sawmill operation into electricity for both internal consumption and export to the ENEE grid, and thermal energy that will be used to produce kiln dried lumber, which has a higher value than the lumber presently produced by this mill. The different production levels of each of the system configurations discussed in section 3.8 are presented in Tables 4.2 through 4.7.

Table 4.1 has been prepared to provide information on the expected electrical requirements of the existing operation, and will serve as a basis of comparison for the six energy system/dry kiln configuration options. The expected electrical requirements for the existing operation are slightly higher than the 1990 requirements displayed in Table 3.3, because it was assumed that since this mill converted from diesel generators the plant lighting and domestic loads would remain on throughout the night rather than for only fours hours, as was the earlier practice when diesel generation was used.

TABLE 4.1: TEUPASENTI SAWMILL - EXISTING SYSTEM

	KILN DRIED LUMBER (MBF)		ELECTRICITY SOLD (KWH)		ELECTRICITY PURCHASED (KWH)	
MONTH	NO. 1 GRADE	NO. 2 GRADE	ON PEAK	OFF PEAK	ON PEAK	OFF PEAK
JANUARY	0	0	0	0	28,242	1,860
FEBRUARY	0	0	0	0	25,934	1,760
MARCH	0	0	0	0	32,401	2,000
APRIL	0	0	0	0	22,385	1,930
MAY	0	0	0	0	26,605	1,980
JUNE	0	0	0	0	23,592	1,950
JULY	0	0	0	0	18,540	1,980
AUGUST	0	0	0	0	18,802	1,930
SEPTEMBER	0	0	0	0	12,307	1,930
OCTOBER	0	0	0	0	12,337	1,980
NOVEMBER	0	0	0	0	9,990	1,950
DECEMBER	0	0	0	0	9,409	1,150
TOTAL	0	0	0	0	240,544	22,400

The expected performance information for the system configurations has been developed to reflect the differences in dry kiln operating hours, kiln steam requirements, kiln electrical requirements, and energy system auxiliary power requirements. These data provide a reasonably accurate indication of the production that can be expected from each of these systems.

Preservation Page Blank

The information in Tables 4.2 through 4.7 is based on the monthly production levels established in 1990, which were assumed to represent a typical operating year for this sawmill. Variations in the monthly production have a significant impact on fuel availability, and in some months result in an inability to satisfy the kiln steam requirements and maintain desired electrical production. An example of this is the month of November for option III (Table 4.4). In this case it is necessary to reduce electrical output during peak hours in order to have enough fuel to provide the dry kiln steam required during off-peak hours. The reduced electrical output results in purchasing some power for the sawmill operation during peak hours. In reality there is probably enough waste stock piled at the mill to compensate for this fuel short fall for several years. However, it was decided that the information developed for this study should represent the sustainable operation of these systems and existing waste reserves were not considered in the analyses.

TABLE 4.2: TEUPASENTI SAWMILL - OPTION I
EXPECTED PERFORMANCE

	KILN DRIED LUMBER (MBF)		ELECTRICITY SOLD (KWH)		ELECTRICITY PURCHASED (KWH)	
MONTH	NO. 1 GRADE	NO. 2 GRADE	ON PEAK	OFF PEAK	ON PEAK	OFF PEAK
JANUARY	0	0	89,091	0	0	7,775
FEBRUARY	0	0	70,554	0	0	7,357
MARCH	0	0	99,817	0	0	8,360
APRIL	0	0	106,243	0	0	8,067
MAY	0	0	107,161	0	0	8,276
JUNE	0	0	103,187	0	0	8,151
JULY	0	0	115,461	0	0	8,276
AUGUST	0	0	119,024	0	0	8,067
SEPTEMBER	0	0	116,349	0	0	8,067
OCTOBER	0	0	121,709	0	0	8,276
NOVEMBER	0	0	19,034	0	0	8,151
DECEMBER	0	0	40,910	0	0	4,807
TOTAL	0	0	1,108,540	0	0	93,630

TABLE 4.3: TEUPASENTI SAWMILL - OPTION II
EXPECTED PERFORMANCE

	KILN DRIED LUMBER (MBF)		ELECTRICITY SOLD (KWH)		ELECTRICITY PURCHASED (KWH)	
MONTH	NO. 1 GRADE	NO. 2 GRADE	ON PEAK	OFF PEAK	ON PEAK	OFF PEAK
JANUARY	40.511	10.675	78,693	0	0	17,384
FEBRUARY	50.681	0.505	60,498	0	0	16,676
MARCH	51.186	0	99,011	0	0	17,737
APRIL	38.492	12.695	106,145	0	0	18,081
MAY	51.186	0	97,710	0	0	18,290
JUNE	27.643	23.543	97,052	0	0	17,644
JULY	15.985	35.201	109,113	0	0	18,175
AUGUST	40.581	10.605	112,058	0	0	18,081
SEPTEMBER	31.188	19.998	109,845	0	0	17,966
OCTOBER	35.165	16.021	74,461	0	0	17,654
NOVEMBER	35.981	15.205	8,920	0	0	18,281
DECEMBER	29.044	0	34,566	0	0	10,885
TOTAL	477.643	144.448	988,072	0	0	206,854

TABLE 4.4: TEUPASENTI SAWMILL - OPTION III
EXPECTED PERFORMANCE

	KILN DRIED LUMBER (MBF)		ELECTRICITY SOLD (KWH)		ELECTRICITY PURCHASED (KWH)	
MONTH	NO. 1 GRADE	NO. 2 GRADE	ON PEAK	OFF PEAK	ON PEAK	OFF PEAK
JANUARY	61.364	198.352	52,550	0	0	18,971
FEBRUARY	71.534	188.182	36,096	0	0	17,936
MARCH	74.699	185.017	72,057	0	0	20,142
APRIL	56.684	203.032	79,387	0	0	19,696
MAY	80.446	179.270	70,234	0	0	20,213
JUNE	40.089	219.627	84,832	0	0	19,903
JULY	36.838	222.878	67,399	0	0	19,935
AUGUST	61.434	19[illegible].282	98,196	0	0	19,696
SEPTEMBER	52.041	207.675	69,635	0	0	19,696
OCTOBER	56.018	203.698	46,743	0	0	20,213
NOVEMBER	56.041	203.675	0	0	17,307	19,903
DECEMBER	39.125	90.733	17,954	0	0	11,624
TOTAL	686.313	2300.421	695,083	0	17,307	227,928

TABLE 4.5: TEUPASENTI SAWMILL - OPTION IV
EXPECTED PERFORMANCE

	KILN DRIED LUMBER (MBF)		ELECTRICITY SOLD (KWH)		ELECTRICITY PURCHASED (KWH)	
MONTH	NO. 1 GRADE	NO. 2 GRADE	ON PEAK	OFF PEAK	ON PEAK	OFF PEAK
JANUARY	0	0	48,333	27,105	0	0
FEBRUARY	0	0	44,377	10,825	0	0
MARCH	0	0	43,112	84,641	0	0
APRIL	0	0	51,186	12,621	0	0
MAY	0	0	49,796	42,874	0	0
JUNE	0	0	48,789	57,146	0	0
JULY	0	0	58,096	31,879	0	0
AUGUST	0	0	60,010	62,104	0	0
SEPTEMBER	0	0	61,292	29,974	0	0
OCTOBER	0	0	64,344	1,941	0	0
NOVEMBER	0	0	30,077	0	0	6,669
DECEMBER	0	0	34,797	0	0	5,913
TOTAL	0	0	594,209	361,110	0	12,582

TABLE 4.6: TEUPASENTI SAWMILL - OPTION V
EXPECTED PERFORMANCE

	KILN DRIED LUMBER (MBF)		ELECTRICITY SOLD (KWH)		ELECTRICITY PURCHASED (KWH)	
MONTH	NO. 1 GRADE	NO. 2 GRADE	ON PEAK	OFF PEAK	ON PEAK	OFF PEAK
JANUARY	40.511	10.675	43,538	20,564	0	0
FEBRUARY	50.681	0.505	39,791	4,150	0	0
MARCH	51.186	0	37,711	78,582	0	0
APRIL	38.492	12.695	46,626	5,764	0	0
MAY	51.186	0	45,263	36,057	0	0
JUNE	27.643	23.543	43,885	51,012	0	0
JULY	15.985	35.201	53,040	25,483	0	0
AUGUST	40.581	10.605	55,048	55,634	0	0
SEPTEMBER	31.188	19.998	56,658	23,237	0	0
OCTOBER	35.165	16.021	58,951	0	0	4,117
NOVEMBER	35.981	15.205	22,115	0	0	15,417
DECEMBER	29.044	0	31,930	0	0	9,165
TOTAL	447.643	144.448	534,556	300,483	0	28,699

TABLE 4.7: TEUPASENTI SAWMILL - OPTION VI
EXPECTED PERFORMANCE

	KILN DRIED LUMBER (MBF)		ELECTRICITY SOLD (KWH)		ELECTRICITY PURCHASED (KWH)	
MONTH	NO. 1 GRADE	NO. 2 GRADE	ON PEAK	OFF PEAK	ON PEAK	OFF PEAK
JANUARY	61.364	198.352	31,386	4,671	0	0
FEBRUARY	71.534	188.182	28,551	0	0	10,372
MARCH	74.699	185.017	25,848	61,415	0	0
APRIL	56.684	203.032	34,521	0	0	10,319
MAY	80.446	179.270	32,849	18,957	0	0
JUNE	40.089	219.627	32,364	33,981	0	0
JULY	36.838	222.878	40,593	8,896	0	0
AUGUST	61.434	198.282	41,909	37,298	0	0
SEPTEMBER	52.041	207.675	45,183	6,676	0	0
OCTOBER	56.018	203.698	46,841	0	0	16,557
NOVEMBER	56.041	203.675	0	0	4,155	16,206
DECEMBER	39.125	90.733	23,813	0	0	9,547
TOTAL	686.313	2300.421	383,858	171,894	4,155	63,001

5.0 ESTIMATED COST OF PROPOSED SYSTEM CONFIGURATIONS

The six different energy system/kiln configurations considered in this study are developed from various combinations of two different boiler/turbine-generator systems and two different dry kilns. Estimated installation and operating cost for each of these four system components is summarized in the table below, and more detailed cost information is presented in Appendix B1.

TABLE 5.1: ESTIMATED SYSTEM COMPONENT COSTS
Lps. 5.83 per US$ (1992)

INSTALLATION COST (US$)		POWER GENERATION		LUMBER DRYING	
Item	**Description**	**475 kW Peaking**	**300 kW Continuous**	**1 Track Kiln**	**2 Track Kiln**
1	Civil Work	12,000	11,800	25,504	42,506
2	Buildings & Structures	46,740	46,740	(incl. 1)	(incl. 1)
3	Mechanical Equipment	362,898	278,470	56,335	70,418
4	Piping Works	12,000	8,645	(incl. 3)	(incl. 3)
5	Instruments & Controls	6,000	6,000	7,500	7,500
6	Electrical Work	35,000	25,215	(incl. 3)	(incl. 3)
7	Installation Labor	40,000	28,194	(incl. 3)	(incl. 3)
8	Painting	9,360	6,743	2,764	4,456
9	Transportation	9,000	6,906	(incl. 3)	(incl. 3)
10	Engineering & Supervision	28,964	22,471	6,300	6,300
11	Commissioning	4,630	4,630	1,000	1,000
12	Contractor's OH&P	157,696	123,498	25,381	35,214
13	Spare Parts	25,000	19,579	1,500	1,500
14	Contingencies	25,000	19,579	5,800	5,800
TOTAL INSTALLED COST (US$)		774,288	608 471	132,084	174,694
ANNUAL OPERATING & MAINTENANCE COST (Lps)					
	Operating Labor	30,000	65,000	7,500	10,000
	Operating Supplies	14,000	14,000	3,000	5,000
	Maintenance	32,000	32,000	8,000	10,000
TOTAL ANNUAL O & M COST (Lps)		76,000	111,000	18,500	25,000

In an attempt to insure that installation cost estimates reflect the impact of construction methods currently practiced in Honduras, the study team enlisted the assistance of ICA Inversiones, which is a consortium of Honduran engineering firms

currently engaged in civil, mechanical and environmental activities. Ing. Eduardo Guzmán Triana of CIMEQH has been our primary contact with ICA. The installation cost estimates for the 475 kW peaking system and the dry kiln systems were prepared on the basis of a detailed project scope and preliminary arrangement drawings that were developed by the study team and given to ICA for their use in preparing the estimates. The cost of the 300 kW base load system was estimated by scaling the cost of the peaking system. The installation cost estimates include all applicable duties, taxes, and freight, and should represent the total cost of installing these systems at the Teupasenti sawmill.

The costs of the generation and drying components were combined appropriately for each of the six options considered in this study, and the results are summarized below in Table 5.2. While the capital costs are quoted in total U.S. dollar equivalents in the preceeding table, the actual capital requirements are for a combination of hard currency and Lempiras. In order to estimate the split for each of the system configurations, a consistent set of assumptions had to be applied to each of the capital cost components. Appendix B2 shows in detail how the capital cost estimates were split into individual currency requirements for the six system configurations. The assumed exchange rate is Lps. 5.83 per US$ (1992).

TABLE 5.2: SYSTEM COST SUMMARY

OPTION	POWER	DRYING KILN	INSTALLATION (US$)	INSTALLATION (Lps.)	O&M (Lps./yr.)
I	Peaking	None	411,198	2,116,814	76,000
II	Peaking	1 Track	477,242	2,501,832	94,500
III	Peaking	2 Track	490,620	2,672,249	101,000
IV	Baseload	None	316,385	1,702,861	111,000
V	Baseload	1 Track	382,428	2,087,878	129,500
VI	Baseload	2 Track	395,807	2,258,296	136,000

6.0 FINANCIAL PROJECTIONS AND RETURNS FOR TEUPASENTI PROJECT

6.1 Method of Analysis, Description of Model

The financial performance of each of the six energy system/dry kiln configurations was analyzed using a cash-flow simulation model. This model, which is adapted and updated from the model that originally was developed for Phase I of the Honduras Wood Energy Study, keeps track of both domestic currency (Lempira) and hard currency (Dollar) accounts. Revenues, savings and costs are projected for a ten-year anticipated operating lifetime for the equipment. The revenues and savings are derived from three sources: (1) the avoided purchase of ENEE power for running the sawmill; (2) the savings and increased revenues attributable to the use of a dry kiln (for those configurations that include a kiln); and (3) sales of surplus electricity to ENEE. The project costs include both annual operations and maintenance, and the cost of capital.

The *pro forma* cash-flow projections are displayed in Appendices C1-C6 in the form of six tabular panels, or pages, for each option. The first two pages of the model's printout show the calculated cash flows and performance parameters, and the third page shows the detailed calculations of annual revenues and costs. The fourth page shows the project capital costs and capital recovery assumptions. The fifth page shows some of the important technical parameters of the project, and the sixth page shows the calculation of savings and increased revenues for the sawmill attributable to the dry kiln.

6.2 Assumptions Used in the Analysis

For the purposes of initial screening, the total capital cost of each of the energy system configurations is assumed to be financed with 100 percent equity. Of this amount, half is assumed to be provided by Honduran investors, while the remainder is supplied from international sources. The equity returns are calculated by the model based on cash flows available for distribution. It is assumed that as much of the equipment and facilities as possible would be purchased within Honduras and that hard currency would only be used where necessary. The project is analyzed as a stand-alone venture, not as an extension of the Maderas de Oriente Sawmill's particular financial structure.

The financial performance of each of the system configurations are compared using a consistent set of technical and financial assumptions. Financial accounting is based on a ten-year project operating lifetime, following a one- year construction period. General inflation in Honduras is assumed to be 20 percent annually, with inflation in electricity prices following the same 20 percent annual rate of increase. The Lempira is assumed to devalue at a rate of ten percent per year in comparison with the Dollar.

generation, based on data provided by ENEE. Virtually all of ENEE's current electricity supply is generated in four hydroelectric facilities, the largest of which, El Cajon, represents more than half of the total installed capacity in the country. The cost of electricity generation in these hydroelectric facilities is used to estimate the rate that ENEE might be in a position to pay for non-utility electricity during off-peak hours (peak and off-peak hours are defined in Section 3.5). Table 6.1 shows the derivation of our avoided cost calculation for off-peak hours of 0.204 Lps/Kwh (1992 Lps). The avoided cost includes a component for annual operations and maintenance, and a component for recovery of the capital cost of the facility. The capital recovery factor is relatively low, given the long life of the facility and its use for multiple purposes. Also, most of the avoided cost of off-peak electricity is contributed by the capital component, so the assumed off-peak electricity price escalates at only one-half of the rate of general inflation, or ten percent annually.

TABLE 6.1: OFF-PEAK AVOIDED COST FOR ELECTRICITY PURCHASE BASED ON ENEE HYDROELECTRIC GENERATING FACILITIES (1992 values)

OPERATION AND MAINTENANCE (O&M) COST

	1990 GWh	c/kWh	Lps/MWh*
El Cajon	1,160.9	0.05	3.10
Rio Lindo	474.3	0.02	1.21
Canaveral	194.3	0.23	13.34
Nispero	86.8	0.40	23.21
Weighted Average O&M		0.08	4.59

CAPACITY COST (based on El Cajon)

$550 million Capital Cost--1985
$696 million Capital Cost--1992 (4% infl.)
12.5% annual Capital Cost recovery factor
87 mil $/y 507 mil Lps/y
290 MW electricity generation capacity

Capacity Cost	3.42 cents/kWh	199.64 Lps/MWh

Total O&M + Capacity:	**3.50 cents/kWh**	**204 Lps/MWh**

*5.83 Lps/$ currency conversion (1992)

ENEE's four hydroelectric generating facilities are capable of meeting the current peak demand on the national electric grid, but expected demand growth will require the utility to increase its available peak generating capacity by about 1993 - 1994. The utility currently plans to install two 50 MW oil-fired peak generating units, one to be operational by 1994 - 1995, the second to be operational by 1996 - 1998. The cost of electricity generation in these oil- fired units is used to estimate the rate that ENEE will pay for non-utility electricity during peak hours. Table 6.2 shows the derivation of our avoided cost calculation for peak hours in 1991 Lps. The peak-period avoided cost is divided into two components. The first component, the peak electricity price (Lps/kWh), is for annual operations and maintenance costs including fuel costs. The second component, the peak capacity price (Lps/kW), is for recovery of the capital costs of the facility. The peak electricity price is assumed to inflate with the rate of general inflation in Honduras. The capacity price is based on a levelized ten-year payment structure assuming a 30% (Lempira) cost of money, including inflation. The amount of avoided capacity (kW) credited to the facility includes both the amount supplied to ENEE during designated peak hours, and the amount displaced by the system (the current sawmill operating load) during those same peak hours.

TABLE 6.2: PEAK AVOIDED COST FOR ENEE ELECTRICITY PURCHASE BASED ON 50 MW OIL-FIRED POWER PLANT
(1992 values)

Peak Hours	14 hrs/weekday (8 am-10 pm) 10 hrs/Saturday (noon-10 pm) 0 hrs/Sunday & Holidays	
Operation	4,028 hrs/y	181,260 MWh/y (90.0% avail.)
Heat Rate	11,377 Btu/kWh	2,867 Kcal/kWh
Fixed O&M	1.6% /y of Capital Cost 300,800 $/y 0.17 cents/kWh	 1,753,664 Lps/y 9.68 Lps/MWh
Variable O&M	1,670 $/y 0.00 cents/kWh	9,736 Lps/y 0.05 Lps/MWh
Fuel	150.9 $/Ton 3.29 $/mmbtu 3.75 cents/kWh	20.75 $/bbl 19.21 Lps/mmbtu 218.45 Lps/MWh
Electric Price	**3.91 cents/kWh**	**228 Lps/MWh**
Levelized Capital Cost:	$18.8 million ($1,992/kW) Amortized over 10 years @ 10%/yr (real)	
Capacity Price	**$382/kW-y**	**Lps 3,757/kW-y**

The Teupasenti sawmill site, which is a relatively small site with a peak demand below 250 kW, purchases electricity from ENEE under Tariff price schedule B (Tarifa "B"). This tariff charges a flat, bundled rate for each kWh purchased, regardless of time of use or shape of demand curve. The current Tarifa "B" rate is 0.4985 Lps/kWh (November, 1991). Table 6.3 shows the annual savings for the sawmill in reduced electric purchases from ENEE, based on the six optional energy system configurations. Peak and off-peak ENEE electricity purchase requirements for the various system configurations are described in section 4 of this report.

TABLE 6.3: TEUPASENTI ELECTRIC PURCHASE SAVINGS WITH WASTE ENERGY SYSTEM

Option	Peak kWh	Off-Peak kWh	Savings Lps
1	0	93,630	84,403
2	0	206,854	27,961
3	17,307	227,928	8,828
4	0	12,582	124,805
5	0	28,699	116,771
6	4,155	63,001	97,600

0.4985 Lps/kWh, Tarifa B rate as of Nov. 1991.

Optional configuration numbers 2, 3, 5, and 6 include dry kilns as part of the total energy-system package. The dry kiln provides three different types of benefits for the sawmilling operation:

- Transportation costs are reduced for all lumber that is kiln dried.
- The unit revenues for some types of product are increased due to kiln drying.
- Kiln drying of a portion of the number two grade lumber produced at the mill allows that portion of the mill's product to be reclassified as number one grade lumber, thus increasing its unit value.

The calculations on page six of the Pro Forma printouts (see Appendix C) use data on costs, product values, and product mix supplied by the sawmill, based on their 1990 production.

The assumptions regarding operations and maintenance costs, capital costs, and system operating performance reflect the descriptions in Chapters 4 and 5 of this report.

6.3 Results of Analysis for Base Configurations

The results of the analysis on the six base-case configurations are summarized in Table 6.4. The full Pro Forma print outs for these configurations are included as Appendix C.

TABLE 6.4: ANALYSIS RESULTS ON THE SIX BASE-CASE SYSTEM CONFIGURATIONS

	Peak Only Systems			Continuous Operating Systems		
	No Kiln	Single T Kiln	Double T Kiln	No Kiln	Single T Kiln	Double T Kiln
Project NPV*, total, in mLps.	2,901	3,139	3,777	2,036	2,378	3,271
Project NPV,* total, in m$s	498	538	648	349	470	561
Total Capital Cost**in mLps.	4,788	5,605	5,871	3,764	4,582	4,847
Total Capital Cost** in m$s	821	961	1,007	646	786	831
Return on Investment, %	18%	17%	20%	15%	18%	21%
Investment Payback, years	5.7	6.1	5.6	6.1	5.8	5.4

* Net present value calculated at 30% (nominal Lps)
**The total capital cost includes both Dollar and Lempira components. It is expressed in both currencies.

The analysis shows that none of the configurations yields a return on investment significantly greater than the assumed 20% annual rate of inflation. This is principally due to the small scale of the electric generation system and the low value of the exported power, especially during off-peak periods.

In developing the capital cost estimates for the six base configurations, it was assumed that only new equipment would be used. In fact, sawmills in Honduras have a long and successful history of using used equipment, which could provide total capital cost savings of as much as thirty percent of total energy system cost. Capital cost savings of this magnitude may increase projected returns to acceptable values, provided the useful life and required maintenance of the equipment are not significantly altered.

The study did not include any configurations that only dried wood or that produced power only for onsite use. The higher rates of return for the systems with kilns would appear to support the notion that lumber drying may be profitable, even if power generation is not, and that the relative attractiveness of double-track over single-track kilns illustrates a positive economy of scale associated with wood drying. In addition, the rates paid by the mill for the power it consumes are higher than those that would be offered by the utility for what it might export, so stand-alone generating systems, especially in conjunction with drying, may be more attractive to the mill operator than the ones analyzed here.

6.4 Sensitivity Analysis on the Six Base Configurations

Having concluded that sawmill-waste power generation for export is probably not profitable at Teupasenti under the assumed ENEE pricing scheme, one might wish to know at what price level it might become attractive. This would help to understand at what level of rising future utility costs, or at what implicit value for environmental or transmission/distribution sytem impacts, such a small-scale system could be profitable.

To provide this kind of insight, the financial simulations were rerun at different assumed ENEE capacity and energy values to determine combinations that would result in real, inflation-adjusted rates of return on investment greater than ten percent per year. These minimum values are illustrated below in Figure 6.1.

FIGURE 6.1: COMBINATIONS YIELDING 10% REAL RETURN ON TOTAL INVESTMENT

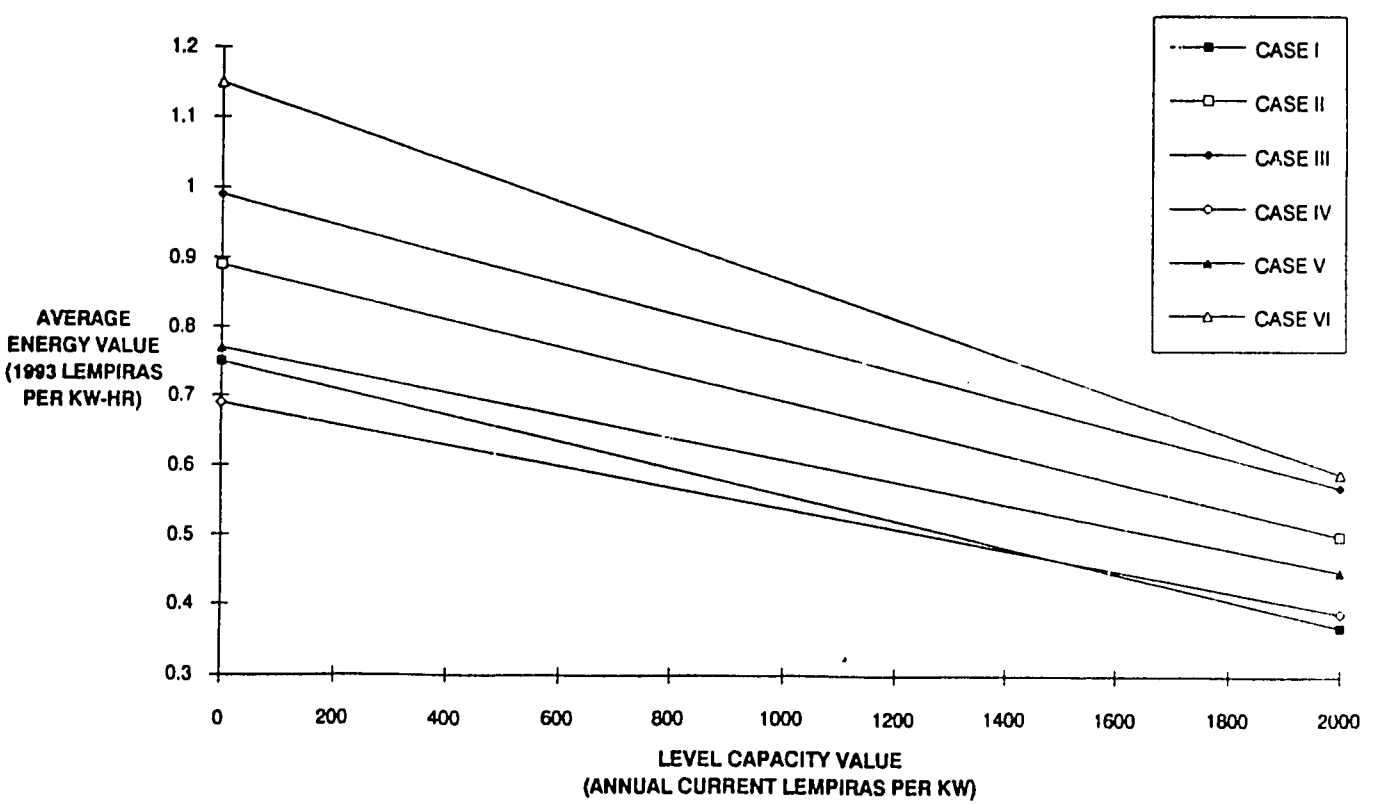

7.0 STRATEGIES FOR PROJECT IMPLEMENTATION

As part of the case study assignment, the team investigated the steps that would be necessary for a sawmill cogeneration project to go forward. Although the Teupasenti mill may not see an advantage to proceeding with an investment in power export capability, the outline below may be useful for developing other, perhaps larger, projects in the sawmill industry.

7.1 Steps in the Development of a Wastewood Energy Project

The next major phase in the development of a sawmill wastewood energy system, after completion of the level of analysis represented by this case study, is to secure the financial commitments that will allow project detailed design and construction to proceed. In order for that to occur, the first decision that needs to be made is to choose the optimal project configuration to pursue. In the case of the Teupasenti sawmill, decisions have to be made about such matters as how to size the energy-conversion equipment, whether to include dry kilns in an energy system package, whether to interconnect with ENEE, or to interconnect with or create a limited distribution system in locations where there is no access to the national electric grid, and whether to produce and market solid biomass fuels in cases where the combustion system does not use all of the sawmill's wastewood.

Once a project configuration is decided upon, the next step that needs to be completed is a formal detailed project feasibility study suitable for the solicitation of the funding necessary for carrying out the project. One of the important components of the feasibility study, in addition to the engineering design and analysis, is negotiating and confirming the input assumptions, such as the rates that ENEE will pay for purchases of surplus electricity. Another is an environmental impact assessment sufficient to satisfy any government permit or approval requirements.

The completed feasibility study is used for three major purposes. The first is as an important planning tool for the project developer. The second purpose is to solicit funding commitments from the various entities that finance projects of this type. The third purpose is to further the process of negotiating the governmental agreements that will be necessary to guarantee that the currency conversions necessary for project construction and operation will be able to be made. These latter arrangements will be administered by the Banco Central de Honduras, with the cooperation of the Ministerio de Economía y Comercio, and ENEE. In the course of preparing this case study report, the project team met with officials of each of these organizations in an introductory and informational meeting. Each expressed interest and verbal support for the concept of the project, and pledged to work with the project developer to develop the necessary agreements.

Concurrent with the negotiations for funding and currency commitments, the feasibility study is used to solicit funding commitments from potential sources of debt and equity financing. Most lenders will require the feasibility study, along with governmental and commercial bank certifications on behalf of the project. Figure 7.1 shows the major sequence of events that typically occur in the course of energy system project development.

FIGURE 7.1: MILESTONES IN THE DEVELOPMENT OF ENERGY PROJECTS

Formulation of Initial Project Concept

Detailed Feasibility Study, Including Preliminary Engineering

Negotiation of Major Documents

- Financing Agreements with Lenders, Investors
- Currency Exchange and Legal Agreements with Banco Central
- Energy Sales Agreement with ENEE, Cooperatives, or Solid Fuels Customers

Financial Closing

Detailed Design and Construction

Facility Commissioning

Project Operation

7.2 The Feasibility Study

Sections 2 through 6 of this report follow the general organization that is appropriate for a feasibility study. The feasibility study should include a description of the project and its capital cost, financial projections, and a consideration of the project's environmental impacts. The major difference between the material contained in this report and a formal feasibility study is that a formal feasibility study would focus on an already selected project configuration (selected during the course of the feasibility analysis), rather than presenting detailed information on all of the optional configurations considered in the course of selecting one for implementation.

A complete project feasibility study should include engineering design, project financial analysis and projections, a schedule and timeline for project development and completion, a description of the sawmill's future raw material supply, and of the future markets for the sawmill's product output. Financing sources need to feel confident in the long-term viability of the host site's overall operation, as well as in the profitability of the proposed energy system investment itself.

The system designs presented in this case-study are designed specifically for the Teupasenti sawmill site. While a waste energy system for any sawmill operation probably will include the same basic components, the specific design and estimated cost of these systems has to be developed with a thorough understanding of the conditions

prevailing at the specific sawmill site and the impact that these conditions will have on the choice of equipment to be included. The most important conditions to be considered include:

- Total energy consumption of the facility, as well as the demand profile of the facility and the quality of service required to provide acceptable operation of the facility.
- Quantity, quality, and production profile of the waste produced by the facility that can be used as fuel for the waste energy system.
- Technical support services available at the facility or readily available from contractors and equipment suppliers in the area. This will have a significant impact on the type of equipment that should be included in the component systems.
- Impact of kiln drying on quality and value of lumber produced and on the cost of transporting lumber to markets.
- Soil, water quality and availability, air quality, and other site environmental conditions.
- Construction conditions and construction methods that are currently practiced at the facility.
- Current and projected cost of operating and construction labor.
- Current and projected environmental regulations and permit requirements.

Evaluation of these conditions can have a significant impact on the selection of equipment and system configuration that is most suitable for a specific waste energy system and should be completed with the assistance of individuals who are experienced in the design, operation, and maintenance of these systems.

Once a reasonable set of potential project configurations has been developed, the next step is to perform financial analyses in order to select the optimal system configuration from the perspective of project financial performance. This type of analysis typically is done by developing a *pro forma* financial projection model like the one used in this case study, using a computer spreadsheet program. *Pro forma* models vary greatly with regard to the level of detail included in the model. The most important considerations are that the model accurately translate the technical and other input variables into a reliable projection of annual cash flows, and that the financial assumptions be realistic and reflective of changing market conditions. The analyses should focus on investment performance, because of the capital- intensive nature of projects of this type.

7.3 Potential Sources of Financing

Wood energy projects are capital intensive. For this reason, the funding package that is assembled for the financing of this project will have a major influence on its success.

Slightly more than half of the total capital cost of a project like the one considered in the case study will require hard currency, while the rest of the costs will be incurred in-country and can be paid in Lempiras. Project funds that are lent or invested in the form of hard currency will require hard currency repayment or premiums, while contributions towards debt or equity made in Lempiras can be compensated with Lempiras.

Acting alone, individual commercial banks in Honduras rarely are able to make loans in excess of 1,000,000 Lempiras (approx. US $200,000 equivalent), which is well below the amount that will be needed for most wastewood energy systems at Honduran sawmills. Larger commercial loans in Honduras have to be syndicated by the Central Bank (Banco Central de Honduras), and require the participation of a group of commercial banks as well as the Central Bank.

There are two major options available to developers of wastewood energy systems in Honduras for the procurement of the hard currency funds needed for the development of their projects. The first is to procure all of the necessary funds for the project in the form of Lempiras, and then to exchange as much as necessary in order to cover the hard currency costs of the systems. The second option is to secure the hard currency funds directly from sources outside of Honduras. While it is difficult to obtain large amounts of Lempira funds in Honduras, it is even more difficult to obtain access to hard currency from within the Country. All purchases of hard currency with domestic funds are handled by the Central Bank, which has the responsibility for allocating access to scarce hard currency funds for all of the competing demands in the Country.

After extensive discussions with officials from the Central Bank, the Ministerio de Economía y Comercio, private commercial banks, and professional accountants in Honduras, the study team noted a strong and virtually unanimous preference for project developers to procure the necessary amounts of hard currency funds from international sources. The Central Bank expressed support for this kind of project and a willingness to work with developers to provide the necessary access to currency exchange for the servicing of international funds. Access to such funds over a period of time is far easier than in the form of a lump sum of the hard currency at the time of construction. This is especially so if savings in national hard currency requirements resulting from the project accrue over an extended period of time, as they would be, for example, through decreased imports of petroleum products or through improved access to export markets for kiln dried wood products

If hard currency funds are obtained from outside of Honduras, it will be necessary to secure Central Bank guarantees for the on-going conversion of the necessary amounts

of Lempiras to hard currency over the course of project operations for the payment of debt service and equity premiums. For investments in wastewood energy systems in Honduras, the most promising sources of hard currency funds that have been identified in the course of this project are:

- CBI/936 Program (Caribbean Basin Initiative)
- Private venture capital sources, especially ones with energy or environmental mandates
- World Bank, Inter-American Development Bank (IDB)
- U.S. public sources (Ex-Im Bank, OPIC)

The CBI/936 Financing Program is a source of tax exempt Dollar funds that are available at low interest rates for a variety of types of development projects in eligible Caribbean Basin Initiative (CBI) countries (Honduras recently became eligible). The 936 funds are profits deposited in Puerto Rican banks by subsidiaries of U.S. corporations operating in Puerto Rico, where they have been an important catalyst in private- sector industrialization. The funds, which can now be used in Honduras without compromising their tax-exempt status, represent a source of loans at one or two percentage points below US market rates. The funds belong to private corporations and are usually administered through private commercial banks in Puerto Rico and their affiliates in other countries like Honduras. For more information on the 936 Program, contact Carlos Perez, Economic Development Administration, Caribbean Development Program, San Juan, Puerto Rico 00936, phone (809) 766-0629.

Some private venture capital sources in the U.S. specialize in renewable energy and environmental projects. An example is the Environmental Enterprises Assistance Fund (EEAF). EEAF is a private, non- profit investment corporation dedicated to renewable energy projects in developing countries. EEAF facilitates projects by taking relatively small positions without requiring the same level of risk premium that may be demanded by a for-profit investor. Ways in which Environmental Enterprises could participate in projects in Honduras or other developing countries include providing equity or various forms of credit enhancement. For more information on the EEAF, contact Helen Chaikovsky, Environmental Enterprises Assistance Fund, 1611 N. Kent St., Arlington, VA 22209, phone (703) 522-5928.

The World Bank and Inter-American Development Bank each have private affiliates that can make loans to private-sector projects of the type under consideration here. The International Finance Corporation (IFC), which is affiliated with the World Bank, tends to have a lower threshold for project size on the order of five million dollars, too large for most wastewood energy projects in Honduras. The Interamerican Investment Corporation (IIC), which is affiliated with the IDB, has a lower project size threshold on the order of one million dollars. Thus the IIC is a potential funder worth pursuing for the funding of larger wastewood energy projects in Honduras. For more information on the IIC, contact Benjamin Vietes, Interamerican Investment Corp., 1300 New York Avenue, Washington, D.C. 20577, phone (202) 623-3900.

The U.S. Export-Import Bank makes loans to support overseas purchases of U.S. equipment. The Ex-Im Bank could provide favorable loans to projects that purchase major pieces of U.S.-made equipment like turbine-generators. The Overseas Private Investment Corporation (OPIC) is an agency set up to provide insurance and financing for overseas projects in which U.S. investors are involved. OPIC could be a source of funding for some sawmill wastewood energy projects in Honduras, depending on the ownership structure representing the project.

The most promising sources of Lempira funds that have been identified as potential funding sources for the Teupasenti energy project are:

- Banco Centro Americano de Integración Economica (BCIE)
- Enterprise for the Americas Initiative (EAI)
- Conventional Honduran banks
- Private Honduran investors

The BCIE, which is headquartered in Tegucigalpa, has a loan program called Programa Centroamericano de Reactivación Industrial (PCRI). The PCRI program provides loans to private sector industrial manufacturers for equipment upgrading and facility modernization, for which sawmill wastewood energy systems are an excellent fit. All lending is done through commercial banks, with funds provided in Lempiras. PCRI funds loaned for fixed assets are available for a ten-year term, with a four-year, interest-only grace period, at rates below those charged by commercial banks on conventional loans in Honduras. For more information on the BCIE, contact Horacio Porras Calderon, Banco Centro Americano de Integración Economica, Apartado Postal 772, Tegucigalpa, Honduras, phone 37 2230.

The Enterprise for the Americas Initiative (EAI) is a program that has been proposed in the U.S. congress but not yet passed for application in Honduras. The EAI involves complex debt-for-equity swaps, which would simultaneously retire government-to-government Honduran debt, and provide Lempira funds for qualifying projects. The legislative uncertainty surrounding this program, combined with the fact that in October the U.S. government forgave nearly all of the existing government-to-government debt held by Honduras, makes this a questionable source of funds for this project. It is recommended, however, that this program continue to be monitored.

Private commercial banks in Honduras could be a source of conventional Lempira debt funds for wastewood energy projects. These funds are fairly expensive and require a large amount of credit enhancement, so other funds should be secured to the extent possible.

In summary, it would be difficult to obtain the rights to exchange all of the Lempiras necessary to cover the hard currency components of a wastewood energy systems, and conventional commercial credit is expensive and difficult to obtain in Honduras. A variety of sources are available for both the hard-currency and Lempira requirements of a project, however.

7.4 Activities Required for Implementation After Funding

Once funding commitments have been secured for the project, all of the necessary agreements have been agreed to, and all contingencies have been removed, the project can begin the EPC (engineering, procurement, and construction) process. EPC should take about one year, following which the system will be placed into service.

8.0 CONCLUSION

This case study addresses in detail the technical and economic feasibility of a wastewood energy system at the Maderas de Oriente sawmill in Teupasenti, Honduras. This study follows an industry overview assessment of the potential for generation of energy from sawmill wastes in Honduras sponsored by the U.S. Agency for International Development in April, 1991. The overview assessment found that, for a significant proportion of the Honduran sawmill industry, investments in wood energy systems appeared profitable and likely to provide other benefits for sawmill operations, nearby rural communities, and the country of Honduras as a whole. Thus, while this case study analyzes the feasibility of investing in a wastewood energy system at a specific sawmill, it provides a methodology for use by other sawmills to analyze the feasibility of wastewood energy systems at their particular sites.

For the purposes of this case study, six different energy system configurations were defined, analyzed, and compared. Four of the configurations include dry kilns as part of the energy system package, with two different kiln designs considered. Three of the configurations are designed for operation during peak hours only (peak hours are defined with respect to the utility electric system), the other three are designed for continuous operation with electrical output maximized during peak hours. All of the configurations include sales of surplus electricity to ENEE, since the sawmill is already connected to the national electricity grid.

The results of the analysis indicate that none of the six base configurations can meet minimally acceptable investment performance criteria. The outlook might be better at a larger mill, under higher prices for electric power sold to ENEE, or for a stand-alone system designed only for lumber drying and power generation exclusively for onsite use.

APPENDIX A:
Cogeneration System and Drying Kiln Design Drawings

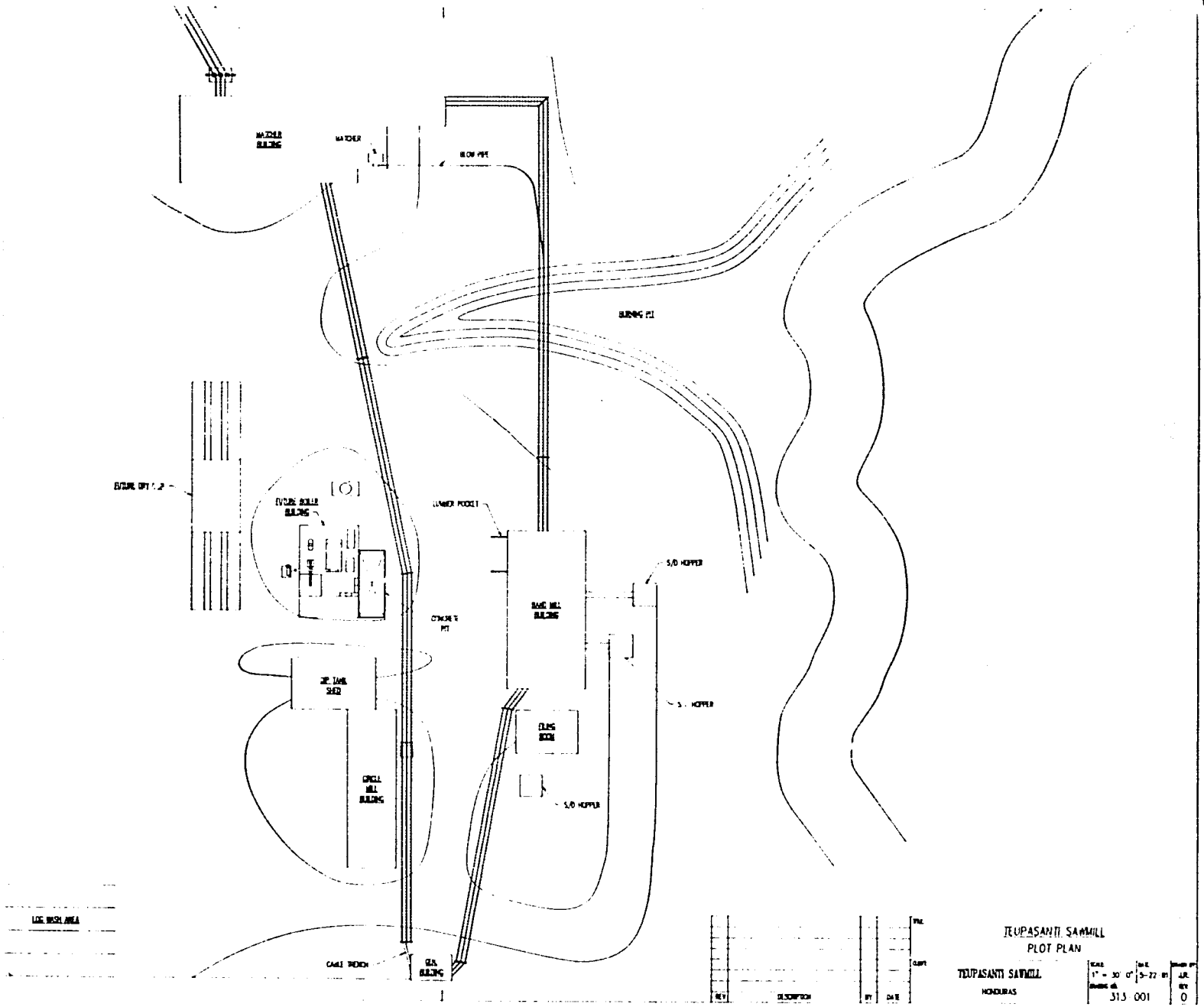
MATCHER BUILDING
MATCHER
BLOW PIPE
BURNING PIT
FUTURE BOILER BUILDING
LUMBER POCKET
S/D HOPPER
BAND MILL BUILDING
CONCRETE PIT
JOB TAKE SHED
CIRCULAR MILL BUILDING
FLUME BOOM
S/D HOPPER
S/D HOPPER
LOG WASH AREA
CABLE TRENCH
GEN. BUILDING
REV
DESCRIPTION
BY
DATE
TEUPASANTI SAWMILL
PLOT PLAN
TEUPASANTI SAWMILL
HONDURAS
1" = 30' 0"
5-22-91
313 001
0

26

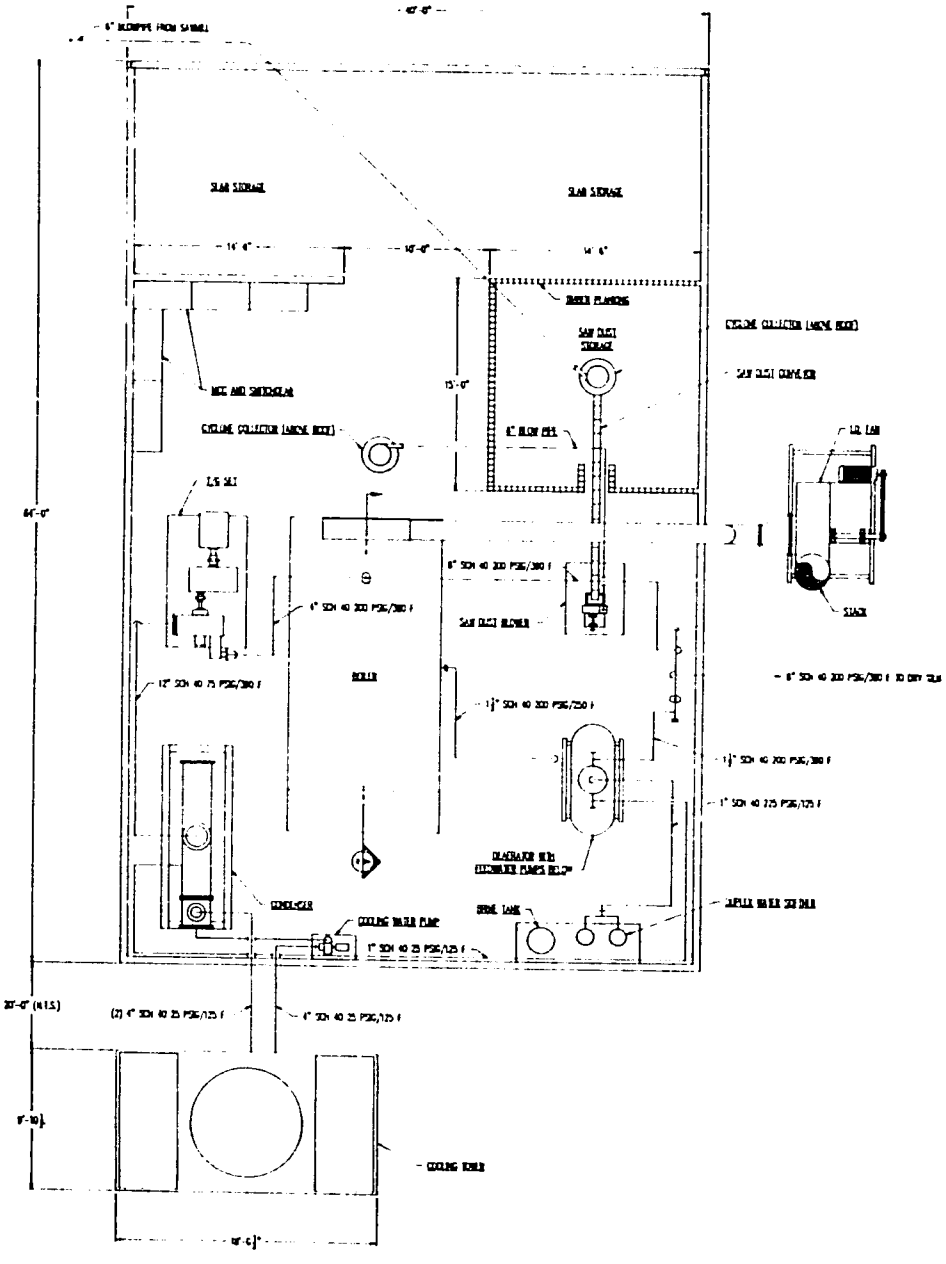

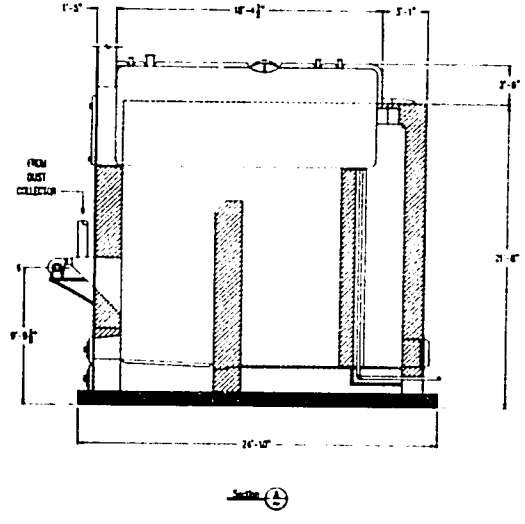

REV	DESCRIPTION	BY	DATE

ILUPASANTI SAWMILL
GENERAL ARRANGEMENT - PLAN

ILUPASANTI SAWMILL
HONDURAS

SCALE 1" = 1'-0" | DATE 10-15-91 | DRAWN BY JR
DRAWING NO. 313-104 | SHEET NO. 3

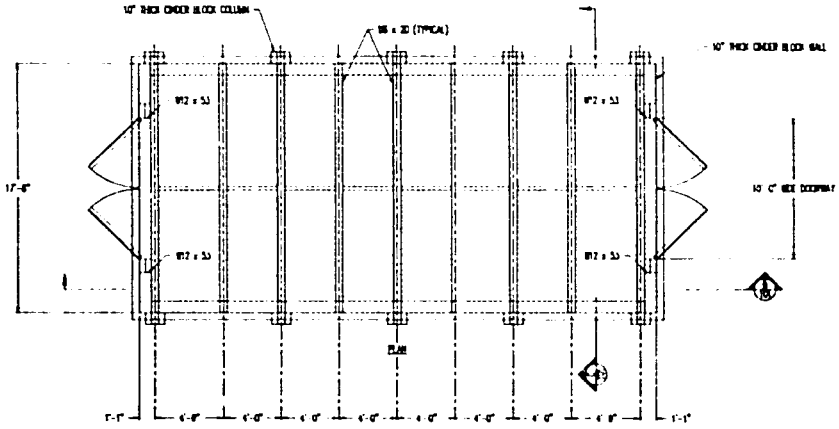

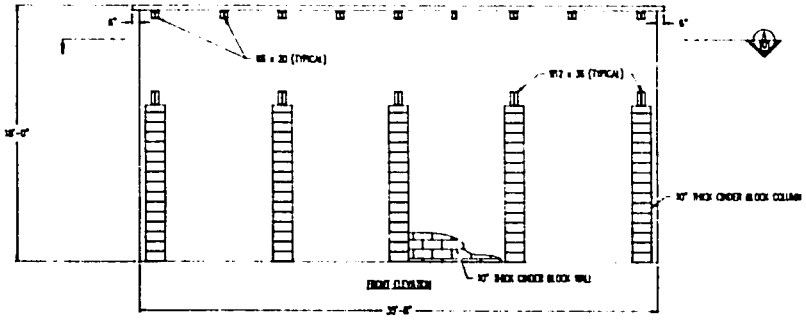

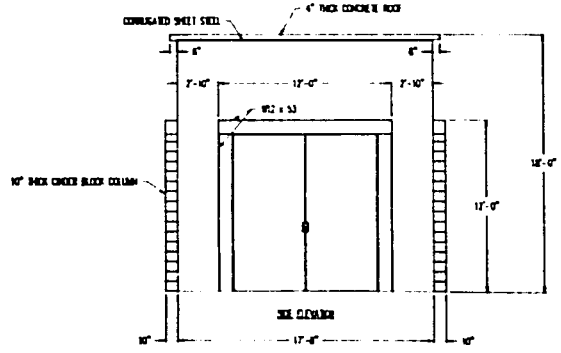

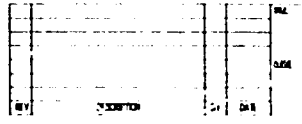

SINGLE TRACK DRY KILN
GENERAL ARRANGEMENT

TEUPASANTI SAWMILL
HONDURAS

1/8" = 1' 0"	10-2-91	
313-100		0

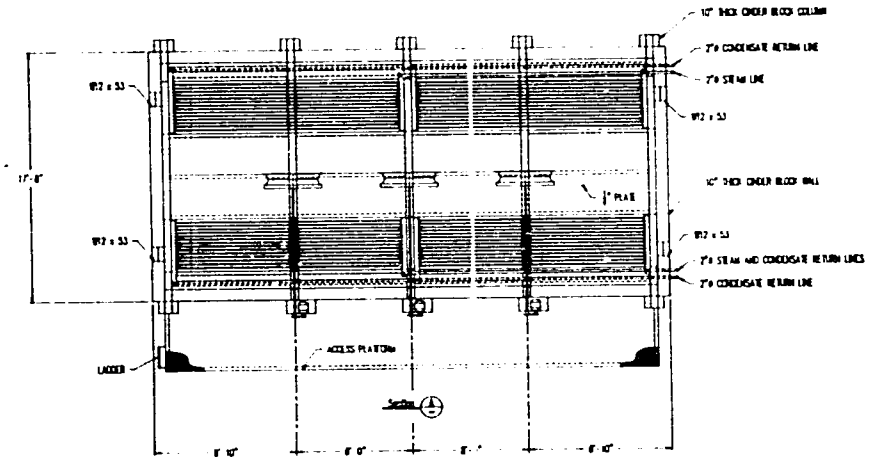

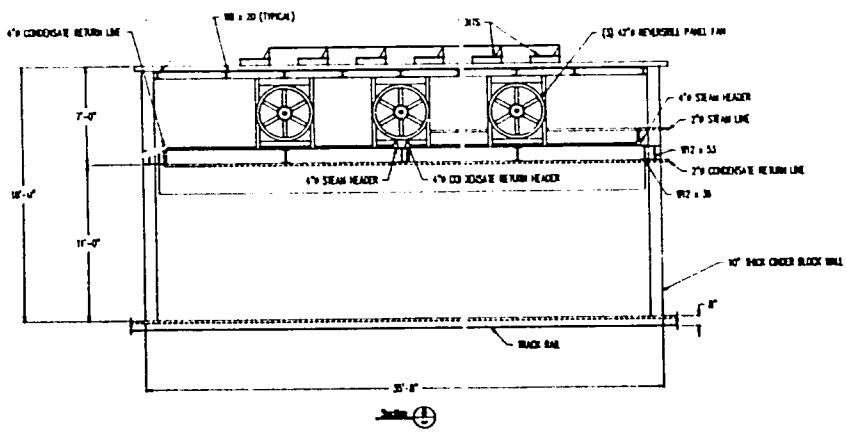

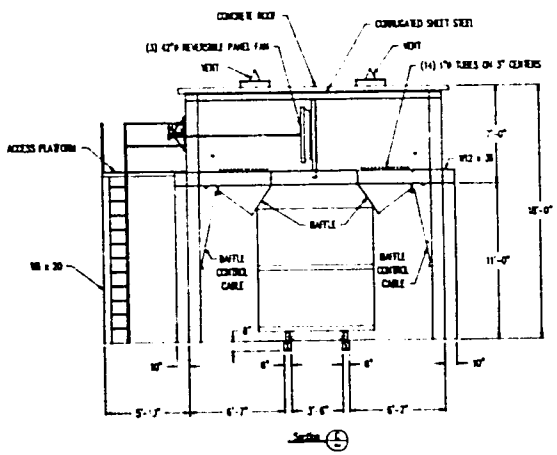

REV	DESCRIPTION	BY	DATE

SINGLE TRACK DRY KILN
SECTIONS AND ELEVATIONS

TRUPASANTI SAWMILL
HONDURAS

SCALE 1" = 1'-0" | DATE 10-2-91 | DRAWN BY J.R.
DRAWING NO. 313-101 | REV. 0

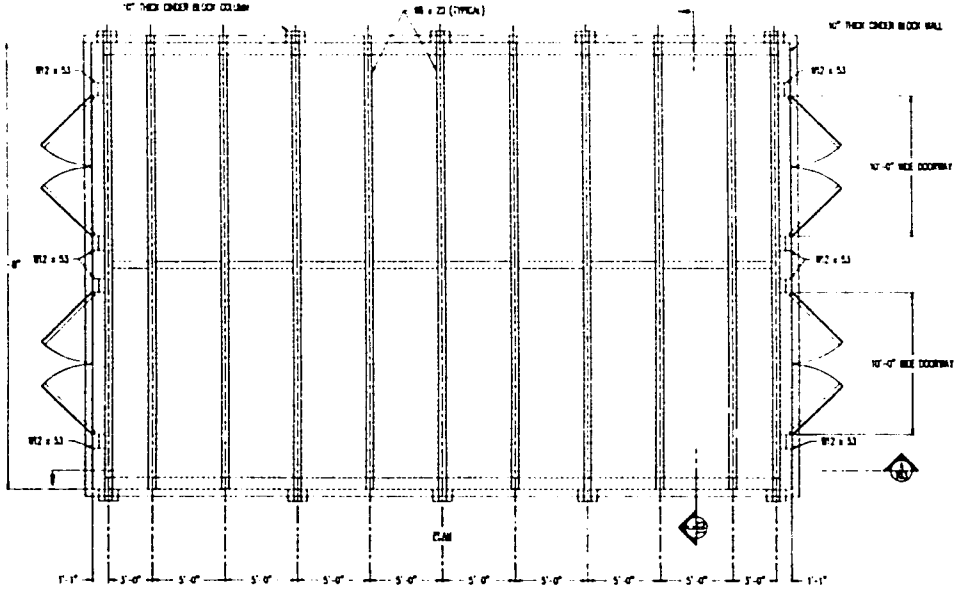

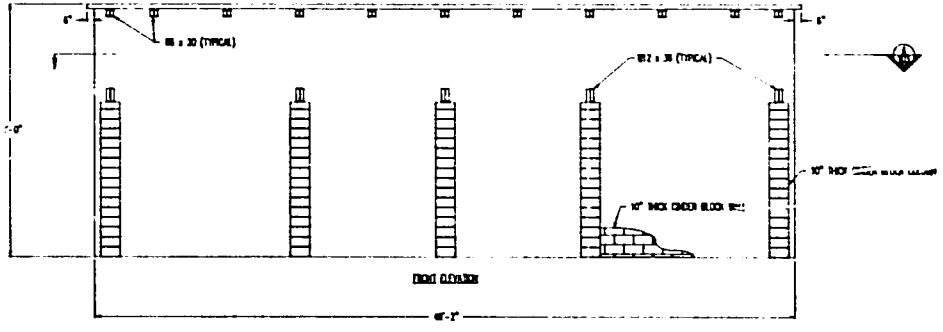

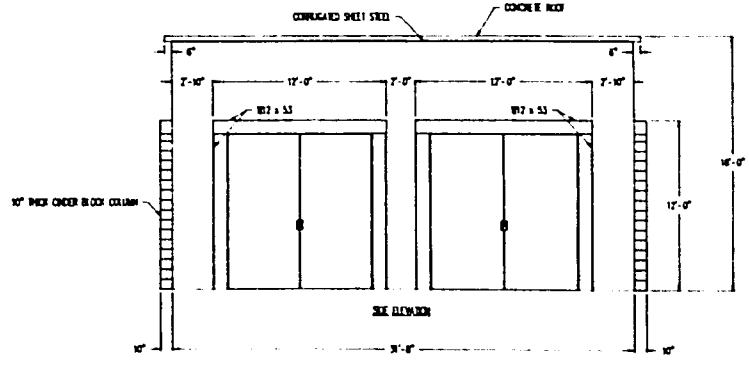

DOUBLE TRACK DRY KILN
GENERAL ARRANGEMENT

TEUPASANTI SAWMILL
HONDURAS

SCALE 1" = 1'-0"
313-102
0

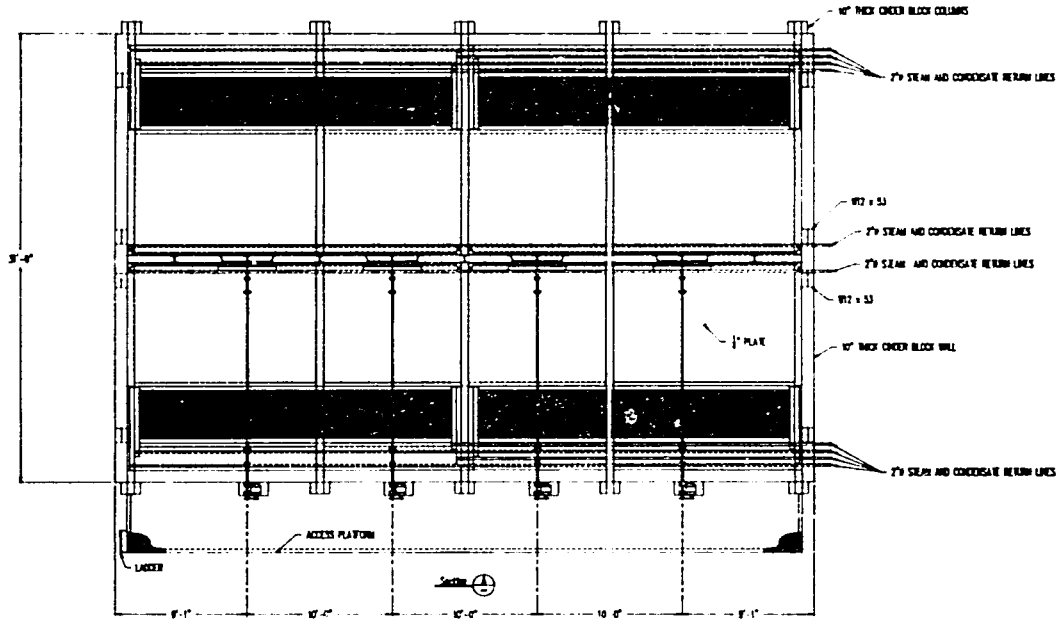

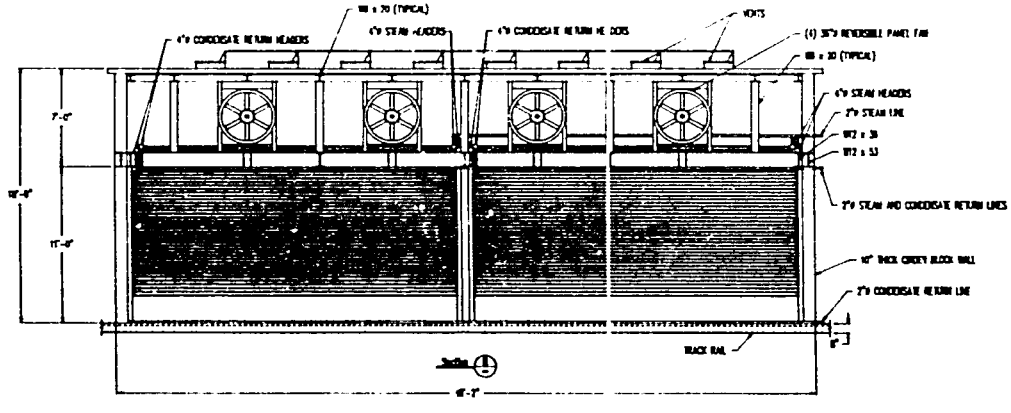

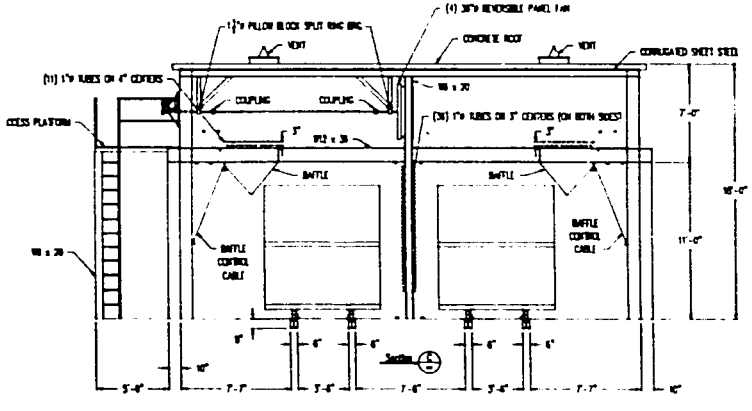

REV	DESCRIPTION	BY	DATE

DOUBLE TRACK DRY KILN
SECTIONS AND ELEVATIONS

TEUPASANTI SAWMILL
HONDURAS

SCALE 1" = 1'-0" | DATE 10-2-91 | DRAWING NO. 313-103

APPENDIX B1:
Detailed Cogeneration System Costs

ELECTRIC GENERATING FACILITY
Teupasenti Sawmill

ESTIMATED COST
US$ (1992)

Item	Description	475 KW Total Estimated Cost	300 KW Total Estimated Cost
1.00	CIVIL WORK		
1.01	Boiler Building Floor Slab - Provide 40'-0"x 64'-0"x 6" thick concrete floor with wire mesh reinforcing cast on compacted earth fill.	5,800.00	5,800.00
1.02	Footings - Provide reiforced concrete footings for the boiler building structure as reuired. (Approx. 10 cu. yds. of concrete required.)	2,200.00	2,000.00
1.03	Equipment Foundations - Provide reinforced concrete pads as required for the boiler, T/G set, deaerator, feedwater pumps and other auxilary equipment. (Approx. 10 cu. yds. of concrete required.)	incl 1.02	incl 1.02
1.04	Excavation Work - Provide for excavation and backfilling of earth as required for the construction of civil works. Backfilling shall be well compacted and consolidated in layers. (Approx 60 cu. yds. of excavation allowed.)	2,600.00	2,600.00
1.05	Grade and Gravel - Provide granular self-drainage mat'l of medium to coarse sand spread in even layers and well compacted.	1,400.00	1,400.00
	SUBTOTAL	12,000.00	11,800.00

ELECTRIC GENERATING FACILITY
Teupasenti Sawmill

ESTIMATED COST
US$ (1992)

Item	Description	475 KW Total Estimated Cost	300 KW Total Estimated Cost
2.00	BUILDINGS and STRUCTURES		
2.01	Boiler Building - Provide a 40'-0"wide x 64'0"long building to house boiler, T/G set and other equipment. Building to include sawdust storage bin and slab storage area. To be constructed with structural steel framing and galvanized, corrugated siding	36,100.00	36,100.00
2.02	Breeching and Piping Support Steel - Provide structural steel supports for boiler exhaust breeching, piping and blow pipes. (Approx. 0.3 tons of steelwork utilizing angles, channels and light weight beams will be required.)	8,640.00	8,640.00
2.03	Miscellaneous Suport Steel - Provide structural steel as required to support conduit, access platforms and other misc. items. (Approx. 1.0 tons of steelwork utilizing angles, channels and plates required.)	2,000.00	2,000.00
	SUBTOTAL	46,740.00	46,740.00

ELECTRIC GENERATING FACILITY
Teupasenti Sawmill

ESTIMATED COST
US$ (1992)

Item	Description	475 KW Total Estimated Cost	300 KW Total Estimated Cost
3.00	MECHANICAL EQUIPMENT		
3.01	Boiler - Supply and install a fire tube boiler of the horizontal return tube design complete with support steel, safety valves and other operating trim. Boiler setting to include steel outer casing w/ cast iron furnace and ash pit access doors, cast iron grates and no. 1 grade refractory lining with min. 2" insulation between refractory and casing. Required Capacity - 12,000 Lb/Hr Design Pressure - 200 psig Total Heating Surface - approx. 2300 sq. ft. Feedwater Temp. - 228 F	124,294.00	93,546.70
3.02	Feedwater Control Valve - Supply and install a 1" dia. 3-way globe valve c/w pnuematic actuator to control feedwater to the boiler.	2,077.00	1,563.20
3.03	Boiler Outlet Breeching - Supply and install 3/16" thk fabricated steel breeching to connect boiler outlet to inlet of induced draft fan located beside boiler building. (Total est. length approx. 45')	7,214.00	5,429.43

ELECTRIC GENERATING FACILITY
Teupasenti Sawmill

ESTIMATED COST
US$ (1992)

Item	Description	475 KW Total Estimated Cost	300 KW Total Estimated Cost
3.04	Deaeratering Feedwater Heater - Supply and install a spray type, thermal deaerator with a capacity of at least 13,000 Lb/hr and an operating pressure of 5 psig. Unit to be furnished c/w access platform, insulation and the following instrument and control devices: a. Water level controller and control valve. b. Make-up steam controller and control valve. c. Code req'd safety valves d. Overflow drain valve e. Hi and Low level alarm switches f. Storage tank gauge glass ass'y g. Thermal well and thermometer in storage tank. h. Pressure gauge on dea. section	23,596.00	17,758.93
3.05	Boiler Feedwater Pumps - Supply and install (2) horizontal, multistage, centrifugal type pumps w/ TEFC electric motors base plates and clp'g guards.	5,592.00	4,208.68
3.06	Chemical Feed System - Supply and install a duplex, chemical dosing pump c/w (2) stainless steel mixing tanks and agitators.	6,525.44	6,525.44
3.07	Boiler Outlet Damper - Provide a louver type damper to be installed in the boiler outlet breeching and equipped with a manual positioner that can be operated from the boiler room floor.	2,051.00	1,543.63

ELECTRIC GENERATING FACILITY
Teupasenti Sawmill

ESTIMATED COST
US$ (1992)

Item	Description	475 KW Total Estimated Cost	300 KW Total Estimated Cost
3.08	Blowdown Separator - Supply and install one (1) 3/8" thk. mild st'l cent. blowdown chamber w/ conical base and cylin. body to collect steam blow off and cond. discharge. Flash steam to be vented from exhaust stack located on top of tank.	4,956.00	4,956.00
3.09	Sawdust Recovery Conveyor - Supply and install one (1) 8" wide chain type conveyor c/w elec. motor drive to deliver sawdust from the storage bin to the sawdust blower.	3,162.00	3,162.00
3.10	Sawdust Blower - Supply and install one (1) centrifugal type fan c/w elec. motor drive and inlet duct to convey sawdust from the recovery conveyor to the cyclone collector located above and in front of the boiler setting. Rated Capicity - 750 CFM Static Pressure - 8.5" wc Temperature - 105F	3,845.00	3,845.00
3.11	Sawdust Cyclones and Blowpipe - Supply and install two (3) sawdust receiving cyclone collectors c/w support steel and necessary delivery piping. One shall be located to receive material from the sawdust blower and discharge it to the boiler and the other two located above the storage bin to receive sawdust from the sawmill and planner areas.	5,960.00	5,960.00

ELECTRIC GENERATING FACILITY
Teupasenti Sawmill

ESTIMATED COST
US$ (1992)

Item	Description	475 KW Total Estimated Cost	300 KW Total Estimated Cost
3.12	Steam Turbine/Generator Set - Supply, and install (1) steam turbine driven electric generator. Turbine Inlet Conditions - 175 psig sat. Turbine Exhaust Conditions - 4"Hg abs. Generator Rating - 475 KW Voltage - 480, 3 Ph, 60 Hz Unit to be furn. c/w following: a. Single reduction, double helical, involute tooth reduction gear b. Couplings and guards. c. Structural steel baseplate. d. Electronic governor e. Electric-magnetic tachometer. f. Stainless st'l gov. valve w/ removable seats. g. Removable stainless st'l strainer. h. Overspeed emergency trip. i. Sentinal safety relief valve. j. One gauge panel w/ gauges for: 1. Initial pressure 2. Nozzle bowl pressure 3. Exhaust pressure 4. Bearing pressure k. Gear lubrication and cooling system c/w oil cooler, oil pump water piping and valves. l. Removable and reusable turbine insulation and jacketing. n. Anti-condensation heaters. o. One (1) manual hand valve. p. Seal steam piping for condensing service.	97,416.00	72,261.71

ELECTRIC GENERATING FACILITY
Teupasenti Sawmill

ESTIMATED COST
US$ (1992)

Item	Description	475 KW Total Estimated Cost	300 KW Total Estimated Cost
3.13	Water-Cooled Condenser - Supply and install one (1) water cooled surface condenserto receive exhaust steam from the steam turbine. Rated Cap. - 10.16 mmbtu/hr Water Inlet Temp. - 80F Water Outlet Temp. - 105F Ancillary Equipment: a. Two (2) cond. pumps w/ elec. motor drives. b. Two (2) steam ejectors (1 hogging & 1 operating) c. Condenser hotwell c/w level transmitter and 3-way control valve	28,712.00	21,298.13
3.14	Cooling Tower - Supply and install one (1) induced draft type cooling tower c/w propeller type fan and drive, water basin, inlet louvers, distribution weirs and make-up water control valve. Rated Flow - 825 GPM Inlet Temp. - 105F Leaving Temp. - 80F	7,923.75	5,877.72
3.15	Cooling Water Pumps - Supply and Install three (3), centrifugal type, cooling water circulating pumps c/w elec. motor drives, couplings, guards and base plates. Rated Capacity - 415 GPM Total Head - 50 ft. Temperture - 125F	7,178.00	5,324.53
3.16	Make-up Water Pump - Supply and install one (1) horiz. close-couplled, multistage, cent. type pump to serve as booster pump for make-up water supply to dea.	7,768.00	5,762.18

ELECTRIC GENERATING FACILITY
Teupasenti Sawmill

ESTIMATED COST
US$ (1992)

Item	Description	475 KW Total Estimated Cost	300 KW Total Estimated Cost
3.17	Make-up Water Treatment - Supply and install one (1) duplex, sodium zeolite water softener c/w brine tank and manual regeneration equipment. Rated Capacity - 15 GPM	8,332.00	6,180.55
3.18	Induced Draft Fan -	2,051.00	1,543.63
3.19	Forced Draft Fan -	2,051.00	1,543.63
3.20	Exhaust Stack -	6,477.00	4,874.75
3.21	Sawdust Feeder Fan -	1,667.00	1,254.62
3.22	Steam Traps -	4,050.00	4,050.00
	SUBTOTAL	362,898.19	278,470.47

ELECTRIC GENERATING FACILITY
Teupasenti Sawmill

ESTIMATED COST
US$ (1992)

Item	Description	475 KW Total Estimated Cost	300 KW Total Estimated Cost
4.00	PIPING WORKS	12,000.00	8,645.13
4.01	Main Steam Piping - Supply and install 6"sch 40 SA106B x 80' lg steam line from boiler to stm. turbine and to steam distribution header. Includes necessary valves, supports, traps expansion joints and insulation.	incl. 4.00	incl. 4.00
4.02	Deaerator Steam Piping - Supply and install 1-1/2"sch 40 SA106B x 20' lg pipe to the dea. make-up stm. control valve c/w valves, supports, etc.	incl. 4.00	incl. 4.00
4.03	Air Ejector Steam Piping - Supply and install 1"sch 40 SA106B x 40' lg pipe to the inlet of the stm. jet ejector c/w valves, supports, etc.	incl. 4.00	incl. 4.00
4.04	Turbine Exhaust Piping - Supply and install 12"sch 40 SA106B x 25' lg pipe from turbine exh. to condenser inlet c/w valves, fittings, supports, etc.	incl. 4.00	incl. 4.00
4.05	Condensate Piping - Supply and install 1"sch 40 SA106B x 75' lg piping from cond pumps to cond. return connection on dea. c/w valves, supports, etc.	incl. 4.00	incl. 4.00
4.06	Boiler Feedwater Piping - Supply and install 1-1/2"sch 40 SA106B x 25' lg piping from feedwater pumps to feedwater control valve on boiler c/w valves, fittings, supports, etc.	incl. 4.00	incl. 4.00
4.07	Make-up Water Piping - Supply and install 1" sch 40 API x 30' lg piping to supply make-up water to dea. make-up control valve.	incl. 4.00	incl. 4.00

ELECTRIC GENERATING FACILITY
Teupasenti Sawmill

ESTIMATED COST
US$ (1992)

Item	Description	475 KW Total Estimated Cost	300 KW Total Estimated Cost
4.08	Blowdown Piping - Supply and install 1-1/2" sch 80 SA106B x 20' lg piping from boiler blowdown to inlet of blowdown sep.	incl. 4.00	incl. 4.00
4.09	Service Water piping - Supply and install 1" sch 40 API pipe to various connections in boiler bld'g c/w valves and fittings as req'd.	incl. 4.00	incl. 4.00
4.10	Chemical Feed Piping - Supply and install 1" sch 40 API x 30' lg piping from chem. feed pumps to inlet connections on blr. and deaerator c/w valves and fittings.	incl. 4.00	incl. 4.00
4.11	Cooling Water Piping - Supply and install 6" sch 40 API x 75'lg piping from condenser water outlet to cooling tower and from cooling tower through circulating pumps to condenser water inlet.	incl. 4.00	incl. 4.00
	SUBTOTAL	12,000.00	8,645.13

ELECTRIC GENERATING FACILITY
Teupasenti Sawmill

ESTIMATED COST
US$ (1992)

Item	Description	475 KW Total Estimated Cost	300 KW Total Estimated Cost
6.00	ELECTRICAL WORK	35,000.00	25,214.97
6.01	Generator Switchgear Panel - Supply, install and terminate Gen. S/G Panel as follows: a. MCCB b. Adjustable Overcurrent Relay c. Adjustable Ground Fault Relay d. Directional Power Relay e. Voltmeter c/w S/S f. Ammeter c/w S/S g. Kilowatt meter h. 3 ph. 4 wire kilowatt hour meter i. 3 Pole Contactor j. Synchronizing control panel and lockout relay	incl. 5.00	incl. 5.00
6.02	Motor Control Center - Supply, install and terminate motor starters and controls for all motors included in powerhouse system.	incl. 5.00	incl. 5.00
6.03	Wiring and Accessories - Supply install and terminate all electrical works for equipment, control system, process instruments, etc. inluding, wiring, cable ways, conduit lighting,connectors, lugs, supports etc.	incl. 5.00	incl. 5.00
		35,000.00	25,214.97

ELECTRIC GENERATING FACILITY
Teupasenti Sawmill

ESTIMATED COST
US$ (1992)

Item	Description	475 KW Total Estimated Cost	300 KW Total Estimated Cost
8.00	PAINTING -	9,360.00	6,743.20
	All steelworks, inclusive of piping, whether or not insulated, shall be thoroughly wire brushed and primed with one (1) coat of zinc chromate primer of 30 micron min. thk. In cases of uninsulated surfaces, two (2) finishing coats of micaceous iron oxide paint shall further be applied after erection. Subsequent damage to the finish coats shall be made good upon completion.		
	WORKMANSHIP - Installation labor.	40,000.00	28,193.98
	TRANSPORTATION -	9,000.00	6,906.16
	ENGINEERING & SUPERVISION -	28,694.00	22,471.45
	COMMISSIONING -	4,630.00	4,630.00
	CONTRACTORS OVERHEAD & PROFIT -	157,696.00	123,498.21
	SPARE PARTS -	25,000.00	19,578.53
	CONTINGENCIES -	25,000.00	19,578.53
	TOTAL ESTIMATED COST	768,018.19	602,470.62

ICA INVERSIONES
Ingenieros Civiles Asociados
TEL. ~~33 6116~~
32 9572

TEGUCIGALPA M.D.C. 16 de octubre de 1991

Sr. Benjamín Carías
COHDEFOR
Su Oficina.

Las personas que a continuación presentamos serán los responsables de la ejecución directa del proyecto "Conversión de Residuos de Madera en Energía Eléctrica, Proyecto Piloto", para el cual presentamos nuestra cotización.

Ing. Oscar Danilo Sierra: Cargo: Gerente General
MBA: Obtenido en Madrid, España.
MSCE: Obtenido en North Dakota, U.S.A.
Especialidad en administración de proyectos y mecánica d e suelos.

Ing. Luis René Eveline: Cargo: División sanitaria y ambiental.
MSCE: Obtenido en Wisconsin U.S.A.
Especialidad en Ingeniería Sanitaría y Ambiental.
Estudios de impacto ambiental.

Ing. Miguel R. Rivera: Cargo: División de Formulación y seguimiento de Proyectos.
Experto en tecnicas de computación para formulación y control de proyectos de construcción. Asesoria en implementación de sistemas de computo.

Ing. Eduardo Guzmán Triana: Cargo: División Electromecánica.
M.B.A.: Obtenido en INCAE, Costa Rica.
Especialidad en Gerencia de Proyectos, experiencia en instalación y mantenimiento de sistemas industriales.

Esperando poder servirles, le saluda, atentamente.

Ing. Oscar Danilo Sierra.
Gerente General.
tel. 32 2910

APPENDIX B2:
Capital Cost Currency Breakdown

Capital Cost of Option 1

475 kW Peaking System
No Kiln

5.83 Lps/$ (1992)

Item	Description	Total $s	hard currency $s	local currency Lps	hard curr %
1.00	Civil Work	12,000	0	69,960	0.0%
2.00	Buildings & Structures	46,740	0	272,494	0.0%
3.00	Mechanical Equipment	362,898	344,753	105,785	95.0%
4.00	Piping Works	12,000	0	69,960	0.0%
5.00	Instruments & Controls	6,000	4,500	8,745	75.0%
6.00	Electrical Work	35,000	17,500	102,025	50.0%
8.00	Painting	9,360	0	54,569	0.0%
	Installation Labor	40,000	0	233,200	0.0%
	Transportation	9,000	4,500	26,235	50.0%
	Engineering, Supervision	28,964	14,482	84,430	50.0%
	Commissioning	4,630	463	24,294	10.0%
	Contractor's OH&P	157,696	0	919,368	0.0%
	Spare Parts	25,000	12,500	72,875	50.0%
	Contingencies	25,000	12,500	72,875	50.0%
	Total	774,288	411,198	2,116,814	53.1%

Equipment, Spares, Duties	366,253	213,640
Civil, Buildings, Structures	0	342,454
Erection and Construction	17,500	459,754
Engineering and Supervision	14,482	1,003,798
Start-Up, Contingency	12,963	97,169

Capital Cost of Option 2

475 kW Peaking System
Single Track Kiln

5.83 Lps/$ (1992)

Item	Description	Total $s	hard currency $s	local currency Lps	hard curr %
1.00	Civil Work	37,504	0	2.8,648	0.0%
2.00	Buildings & Structures	46,740	0	272,494	0.0%
3.00	Mechanical Equipment	419,233	398,272	122,206	95.0%
4.00	Piping Works	12,000	0	69,960	0.0%
5.00	Instruments & Controls	13,500	10,125	19,676	75.0%
6.00	Electrical Work	35,000	17,500	102,025	50.0%
8.00	Painting	12,124	0	70,683	0.0%
	Installation Labor	40,000	0	233,200	0.0%
	Transportation	9,000	4,500	26,235	50.0%
	Engineering, Supervision	35,264	17,632	102,795	50.0%
	Commissioning	5,630	563	29,541	10.0%
	Contractor's OH&P	183,077	0	1,067,339	0.0%
	Spare Parts	26,500	13,250	77,248	50.0%
	Contingencies	30,800	15,400	89,782	50.0%
	Total	906,372	477,242	2,501,832	52.7%

Equipment, Spares, Duties	426,147	245,365
Civil, Buildings, Structures	0	491,143
Erection and Construction	17,500	475,868
Engineering and Supervision	17,632	1,170,133
Start-Up, Contingency	15,963	119,323

Capital Cost of Option 3

475 kW Peaking System
Double Track Kiln

5.83 Lps/$ (1992)

Item	Description	Total $s	hard currency $s	local currency Lps	hard curr %
1.00	Civil Work	54,506	0	317,770	0.0%
2.00	Buildings & Structures	46,740	0	272,494	0.0%
3.00	Mechanical Equipment	433,316	411,650	126,312	95.0%
4.00	Piping Works	12,000	0	69,960	0.0%
5.00	Instruments & Controls	13,500	10,125	19,676	75.0%
6.00	Electrical Work	35,000	17,500	102,025	50.0%
8.00	Painting	13,816	0	80,547	0.0%
	Installation Labor	40,000	0	233,200	0.0%
	Transportation	9,000	4,500	26,235	50.0%
	Engineering, Supervision	35,264	17,632	102,795	50.0%
	Commissioning	5,630	563	29,541	10.0%
	Contractor's OH&P	192,910	0	1,124,665	0.0%
	Spare Parts	26,500	13,250	77,248	50.0%
	Contingencies	30,800	15,400	89,782	50.0%
	Total	948,982	490,620	2,672,249	51.7%

Equipment, Spares, Duties	439,525	249,470
Civil, Buildings, Structures	0	590,264
Erection and Construction	17,500	485,732
Engineering and Supervision	17,632	1,227,460
Start-Up, Contingency	15,963	119,323

Capital Cost of Option 4

300 kW Base Load System
No Kiln

5.83 Lps/$ (1992)

Item	Description	Total $s	hard currency $s	local currency Lps	hard curr %
1.00	Civil Work	11,800	0	68,794	0.0%
2.00	Buildings & Structures	46,740	0	272,494	0.0%
3.00	Mechanical Equipment	278,470	264,547	81,174	95.0%
4.00	Piping Works	8,645	0	50,401	0.0%
5.00	Instruments & Controls	6,000	4,500	8,745	75.0%
6.00	Electrical Work	25,215	12,607	73,502	50.0%
8.00	Painting	6,743	0	39,313	0.0%
	Installation Labor	28,194	0	164,371	0.0%
	Transportation	6,906	3,453	20,131	50.0%
	Engineering, Supervision	22,471	11,236	65,504	50.0%
	Commissioning	4,630	463	24,294	10.0%
	Contractor's OH&P	123,498	0	719,995	0.0%
	Spare Parts	19,579	9,789	57,071	50.0%
	Contingencies	19,579	9,789	57,071	50.0%
	Total	608,471	316,385	1,702,861	52.0%

Equipment, Spares, Duties	282,289	167,122
Civil, Buildings, Structures	0	341,288
Erection and Construction	12,607	327,587
Engineering and Supervision	11,236	785,499
Start-Up, Contingency	10,252	81,365

Capital Cost of Option 5

300 kW Base Load System
Single Track Kiln

5.83 Lps/$ (1992)

Item	Description	Total $s	hard currency $s	local currency Lps	hard curr %
1.00	Civil Work	37,304	0	217,482	0.0%
2.00	Buildings & Structures	46,740	0	272,494	0.0%
3.00	Mechanical Equipment	334,805	318,065	97,596	95.0%
4.00	Piping Works	8,645	0	50,401	0.0%
5.00	Instruments & Controls	13,500	10,125	19,676	75.0%
6.00	Electrical Work	25,215	12,607	73,502	50.0%
8.00	Painting	9,507	0	55,427	0.0%
	Installation Labor	28,194	0	164,371	0.0%
	Transportation	6,906	3,453	20,131	50.0%
	Engineering, Supervision	28,771	14,386	83,869	50.0%
	Commissioning	5,630	563	29,541	10.0%
	Contractor's OH&P	148,879	0	867,966	0.0%
	Spare Parts	21,079	10,539	61,444	50.0%
	Contingencies	25,379	12,689	73,978	50.0%
	Total	740,555	382,428	2,087,878	51.6%

Equipment, Spares, Duties	342,183	198,847
Civil, Buildings, Structures	0	489,977
Erection and Construction	12,607	343,701
Engineering and Supervision	14,386	951,835
Start-Up, Contingency	13,252	103,519

Capital Cost of Option 6

300 kW Base Load
Double Track Kiln

5.83 Lps/$ (1992)

Item	Description	Total $s	hard currency $s	local currency Lps	hard curr %
1.00	Civil Work	54,306	0	316,604	0.0%
2.00	Buildings & Structures	46,740	0	272,494	0.0%
3.00	Mechanical Equipment	348,888	331,444	101,701	95.0%
4.00	Piping Works	8,645	0	50,401	0.0%
5.00	Instruments & Controls	13,500	10,125	19,676	75.0%
6.00	Electrical Work	25,215	12,607	73,502	50.0%
8.00	Painting	11,199	0	65,291	0.0%
	Installation Labor	28,194	0	164,371	0.0%
	Transportation	6,906	3,453	20,131	50.0%
	Engineering, Supervision	28,771	14,386	83,869	50.0%
	Commissioning	5,630	563	29,541	10.0%
	Contractor's OH&P	158,712	0	925,292	0.0%
	Spare Parts	21,079	10,539	61,444	50.0%
	Contingencies	25,379	12,689	73,978	50.0%
	Total	783,165	395,807	2,258,296	50.5%

Equipment, Spares, Duties	355,561	202,953
Civil, Buildings, Structures	0	589,098
Erection and Construction	12,607	353,565
Engineering and Supervision	14,386	1,009,161
Start-Up, Contingency	13,252	103,519

APPENDIX C1:
Detailed Economic Simulation
Option I
Peaking System Without Kiln

03-Aug-92 TEUPASENTI SAWMILL WOOD ENERGY PROJECT

Option I: Peaking System without Kiln

PROFORMA STATEMENT OF INCOME AND CAPITAL, Page 1

(first operating year begins on January 1)

	1993	1994	1995	1996	1997	1998	1999	2000	2001	2002	2003
REVENUES/SAVINGS (000 Lps.)											
ELECTRICAL ENERGY SALES	655	721	800	895	1,010	1,147	1,311	1,508	1,745	2,029	2,370
AVOIDED DIESEL GENERATION COSTS	0	0	0	0	0	0	0	0	0	0	0
AVOIDED PURCHASE OF EMEE POWER	111	133	160	192	230	276	331	398	477	572	687
KILN-RELATED REVENUES	0	0	0	0	0	0	0	0	0	0	0
***** TOTAL REVENUES	766	854	960	1,087	1,240	1,423	1,642	1,906	2,222	2,602	3,057
EXPENSES (000 Lps.)											
PURCHASED BIOMASS FUEL	0	0	0	0	0	0	0	0	0	0	0
OPERATING LABOR	39	47	57	68	82	98	118	141	170	203	244
REPAIRS AND MAINTENANCE	42	50	61	73	87	105	126	151	181	217	260
ASH, WASTE DISPOSAL	18	22	27	32	38	46	55	66	79	95	114
PROPERTY TAXES & INSURANCE	20	22	24	27	31	35	40	46	53	62	72
GENERAL AND ADMINISTRATIVE	5	6	7	9	10	12	15	18	21	26	31
***** TOTAL EXPENSES BEFORE DEBT PAYMENT	125	148	175	209	248	296	353	422	504	603	721
***** NET PRE-DEBT OPERATING BENEFIT (000 Lps)	641	706	785	879	991	1,127	1,289	1,484	1,718	1,999	2,336
PROJECT DEBT PAYMENTS (000 Lps.)	0	0	0	0	0	0	0	0	0	0	0
***** NET CASH AVAILABLE (000 Lps.)	641	706	785	879	991	1,127	1,289	1,484	1,718	1,999	2,336
***** DEBT COVERAGE RATIO	#N/A	#N/A	#N/A	#N/A	#N/A	#N/A	#N/A	#N/A	#N/A	#N/A	#N/A

OVERALL PROJECT SUMMARY, Page 2

SYSTEM COSTS AND VALUE, LOCAL CURRENCY

Installed Facilities Cost	4,341	mLps.
Total Capital Cost	4,788	mLps.
Initial Fuel Cost	0.000	Lps/kWh
Initial O&M Cost	0.078	Lps/kWh
Project NPV (pre-debt, 30% DR)	2,901	mLps.

SYSTEM COSTS AND VALUE EXPRESSED IN DOLLARS

Installed Facilities Cost	745	m$s
Total Capital Cost	821	m$s
Initial Fuel Cost	0.000	$/kWh
Initial O&M Cost	0.012	$/kWh
Project NPV (pre-debt, 30% DR)	498	m$s

INVESTMENT PERFORMANCE

Investment Payback	5.7	yrs
Pre-Tax IRR (%)	18.0%	

COGENERATION SYSTEM OPERATING PARAMETERS

Ave. Fuel Use	19.50	mmBtu/hr
Ave. Capacity, Gross	453	kW
Average Site Load	123	kW
Average Offsite Sales	330	kW
Peak Offsite Sales	1,109	kWh/yr
Heat Rate, ave.	43,047	Btu/kWh
Heat Rate, peak, sawmill	48,278	Btu/kWh
Heat Rate, peak, no saw	48,278	Btu/kWh
Heat Rate, off-peak	#N/A	Btu/kWh
Operating Hours-yr 1	3,944	
Operating Hours-yr 2	3,944	
Ave Debt Coverage Ratio	#N/A	
Kiln Steam Use	0	lb/hr

DATA BY TIME-OF-USE PERIOD	Ann. Hours	Avail	Hrs Yr 1	Hrs Yr 2	kW Sales	Fuel BDT/hr	Revenue Lempira/kWh
Peak, Sawmill Operating	2,400	100.0%	2,400	2,400	241	0.98	0.30
Peak, no Sawmill	1,662	92.9%	1,544	1,544	343	0.98	0.30
Off Peak, no Sawmill	4,698	0.0%	0	0	0	0.00	0.23

PROJECT REVENUES, Page 3

PROJECT REVENUES/SAVINGS (mLempira/yr)	1993	1994	1995	1996	1997	1998	1999	2000	2001	2002	2003
ANNUAL SYSTEM CAPACITY FACTOR	45.0%	45.0%	45.0%	45.0%	45.0%	45.0%	45.0%	45.0%	45.0%	45.0%	45.0%
TOTAL ELECTRIC ENERGY OUTPUT (mkWh/YR)	1,593	1,593	1,593	1,593	1,593	1,593	1,593	1,593	1,593	1,593	1,593
PEAK CAPACITY CONTRIBUTION TO ENEE (kW)	383	383	383	383	383	383	383	383	383	383	383
PEAK ELECTRIC SALES PRICE (Lempira/kWh)	0.30	0.36	0.43	0.52	0.62	0.74	0.89	1.07	1.28	1.54	1.85
PEAK CAPACITY SALES PRICE (Lps/kW-y)	847	847	847	847	847	847	847	847	847	847	847
OFF-PEAK ELECTRIC SALES PRICE (Lempira/kWh)	0.23	0.25	0.27	0.30	0.33	0.36	0.40	0.44	0.46	0.53	0.58
AVOIDED DIESEL FUEL USE (gal/yr)	0	0	0	0	0	0	0	0	0	0	0
DIESEL FUEL PRICE (Lempira/gal)	9.99	11.99	14.39	17.27	20.72	24.87	29.84	35.81	42.97	51.56	61.88
ANNUAL DIESEL O&M AND DEPRECIATION	0	0	0	0	0	0	0	0	0	0	0
AVOIDED PURCHASE OF ENEE POWER (mLps/yr)	111	133	160	192	230	276	331	398	477	572	687
KILN-RELATED ENHANCED REVENUES (mLps/yr)	0	0	0	0	0	0	0	0	0	0	0
PROJECT OPERATING EXPENSES (mLempira/yr)											
FUELWOOD CONSUMPTION (1000 ton/Yr)	3.86	3.86	3.86	3.86	3.86	3.86	3.86	3.86	3.86	3.86	3.86
FUELWOOD COST (Lempira/ton)	0.00	0.00	0.00	0.00	0.00	0.00	0.00	0.00	0.00	0.00	0.00
FUELWOOD COST ESCALATION RATE	20.0%	20.0%	20.0%	20.0%	20.0%	20.0%	20.0%	20.0%	20.0%	20.0%	20.0%
OPERATING LABOR	39	47	57	68	82	98	118	141	170	203	244
REPAIRS AND MAINTENANCE	42	50	61	73	87	105	126	151	181	217	260
OPERATING SUPPLIES	18	22	27	32	38	46	55	66	79	95	114
GENERAL AND ADMINISTRATIVE, MISC.	5	6	7	9	10	12	15	18	21	26	31
INSURANCE	10	12	14	17	21	25	30	36	43	52	62
PROPERTY TAXES	10	10	10	10	10	10	10	10	10	10	10
FINANCIAL ASSUMPTIONS											
GENERAL INFLATION RATE	20.0%	20.0%	20.0%	20.0%	20.0%	20.0%	20.0%	20.0%	20.0%	20.0%	20.0%
DOMESTIC ENERGY INFLATION RATE	20.0%	20.0%	20.0%	20.0%	20.0%	20.0%	20.0%	20.0%	20.0%	20.0%	20.0%
LEMPIRA TO $ CONVERSION RATE	6.41	7.05	7.76	8.54	9.39	10.33	11.36	12.50	13.75	15.12	16.63

PROJECT CAPITAL COSTS AND FINANCING, Page 4

CAPITAL COST REQUIREMENTS	m$s	mLemps
Equipment, Spares, Duties	366	214
Civil, Buildings, Structures	0	342
Erection and Construction	18	460
Engineering and Supervision	14	1,004
Start-Up, Contingency	13	97
Construction Interest and Fees	17	175
TOTAL CAPITAL, EACH CURRENCY	428	2,291
TOTAL CAPITAL, BOTH CURRENCIES	821	4,788

(1 $ = 5.83 Lps. (1992))

CONSTRUCTION FINANCING PARAMETERS	
Construction Interest Rate	12.00%
Funds Commitment Fee	1.0%
Construction/Startup (Quarters)	4.0
Project Funding Date	Jan-92
Project Startup Date	Jan-93

DEBT SCHEDULES	BASIS	RATE	TERM	1993	1994	1995	1996	1997	1998	1999	2000	2001	2002	2003
$ Debt	0	6.5%	5	0	0	0	0	0	0	0	0	0	0	0
Lemp. Debt	0	23.0%	5	0	0	0	0	0	0	0	0	0	0	0
Total Debt in mLempira				0	0	0	0	0	0	0	0	0	0	0

EQUITY SCHEDULES														
Cash Available for Distribution, mLemp				641	706	785	879	991	1,127	1,289	1,484	1,718	1,999	2,336
	percent	equity												
Honduran Distributions, mLempir.	50.0%	2,291		320	353	392	439	496	563	645	742	859	999	1,168
Intl. Distributions, m$	50.0%	428		50	50	51	51	53	55	57	59	62	66	70
COVERAGE RATIO FOR AVE CALCULATION				#N/A	#N/A	#N/A	#N/A	#N/A	#N/A	#N/A	#N/A	#N/A	#N/A	#N/A
COVERAGE RATIO FOR MIN CALCULATION				#N/A	#N/A	#N/A	#N/A	#N/A	#N/A	#N/A	#N/A	#N/A	#N/A	#N/A

Summer Months, Year 1: 6
Winter Months, Year 1: 6

PERFORMANCE SUMMARY, Page 5

MONTHLY HOURS	JAN	FEB	MAR	APR	MAY	JUN	JUL	AUG	SEP	OCT	NOV	DEC	TOTAL
Scheduled Outage	396	352	400	386	396	390	396	386	386	396	390	542	4,816
Operating Total	348	320	344	334	348	330	348	358	334	348	330	202	3,944
Sawmill Operating Hours	203	205	233	181	234	234	192	202	176	184	195	161	2,400
GROSS ELECTRICAL OUTPUT (kW)													
Peak, Sawmill Operating	403	366	453	453	453	453	453	453	453	453	142	312	
Peak, no Sawmill	403	366	453	453	453	453	453	453	453	453	142	312	
Off Peak, no Sawmill	0	0	0	0	0	0	0	0	0	0	0	0	
SAWMILL, KILN AND STATION LOAD (kW)													
Peak, Sawmill Operating	204	190	207	190	182	169	163	160	136	133	104	121	
Peak, no Sawmill	68	66	70	70	70	70	70	70	70	70	56	63	
Off Peak, no Sawmill	0	0	0	0	0	0	0	0	0	0	0	0	
ELECTRICAL OFFSITE SALES (kW)													
Peak, Sawmill Operating	199	176	246	263	271	284	290	293	317	320	38	191	
Peak, no Sawmill	335	300	383	383	383	383	383	383	383	383	86	249	
Off Peak, no Sawmill	0	0	0	0	0	0	0	0	0	0	0	0	
FUEL CONSUMPTION (BDT/hr) @	9950 Btu/lb		0.00 BDT/hr kiln loa			0 lb/hr steam to kiln							
Peak, Sawmill Operating	0.98	0.90	1.08	1.08	1.08	1.08	1.08	1.08	1.08	1.08	0.43	0.79	
Peak, no Sawmill	0.98	0.90	1.08	1.08	1.08	1.08	1.08	1.08	1.08	1.08	0.43	0.79	
Off Peak, no Sawmill	0.00	0.00	0.00	0.00	0.00	0.00	0.00	0.00	0.00	0.00	0.00	0.00	

KILN-RELATED REVENUES, Page 6

Teupasenti Sawmill Data

Freight Loads that Can be Carried on a 40 Foot Flat-Bed Truck

1. Dressed (surfaced) lumber

green	18,000	bf/load		
dried	22,000	bf/load	22.2%	more per load

2. Rough (unsurfaced) lumber

green	10,000	bf/load		
dried	12,000	bf/load	20.0%	more per load

Total Product Production from Sawmill: 2,987 mbf/yr (1990)

Product Category	1990 (%)	1990 mbf/y	with kiln (%)	with kiln mbf/y	Value Lps/bf)	Freight Lps/bf)	net prod value (mLps/y) 1990	net prod value (mLps/y) kiln
#1-Grade for factory, green	7.2%	216	7.2%	216	1.590	0.095	323	323
#1-Grade for factory, dry	0.0%	0	0.0%	0	1.840	0.076	0	0
#1-Grade for export, green	7.2%	216	7.2%	216	1.590	0.160	309	309
#1-Grade for export, dry	0.0%	0	0.0%	0	1.840	0.128	0	0
Panneling, Flooring, green	80.5%	2,405	80.5%	2,405	1.255	0.103	2,771	2,771
Panneling, Flooring, dry	0.0%	0	0.0%	0	1.255	0.080	0	0
#2-Grade Lumber, rough green	5.0%	149	5.0%	149	1.190	0.185	150	150
#2-Grade Lumber, rough dry	0.0%	0	0.0%	0	1.190	0.148	0	0
Mill Total							3,553	3,553
Total Benefit Due to Dry Kiln, mLps/y, 1991 Lps								0

APPENDIX C2:
Detailed Economic Simulaton
Option II
Peaking System With Single Track Kiln

03-Aug-92 TEUPASENTI SAWMILL WOOD ENERGY PROJECT

Option II: Peaking System with Single Track Kiln

PROFORMA STATEMENT OF INCOME AND CAPITAL, Page 1

(first operating year begins on January 1)

	1993	1994	1995	1996	1997	1998	1999	2000	2001	2002	2003
REVENUES/SAVINGS (000 Lps.)											
ELECTRICAL ENERGY SALES	593	652	723	807	909	1,031	1,178	1,353	1,564	1,817	2,121
AVOIDED DIESEL GENERATION COSTS	0	0	0	0	0	0	0	0	0	0	0
AVOIDED PURCHASE OF ENEE POWER	37	44	53	64	76	91	110	132	158	190	228
KILN-RELATED REVENUES	189	227	272	327	392	470	564	677	813	975	1,171
***** TOTAL REVENUES	819	923	1,048	1,198	1,377	1,593	1,852	2,162	2,535	2,982	3,519
EXPENSES (000 Lps.)											
PURCHASED BIOMASS FUEL	0	0	0	0	0	0	0	0	0	0	0
OPERATING LABOR	49	59	71	85	102	123	147	177	212	254	305
REPAIRS AND MAINTENANCE	53	63	76	91	109	131	157	188	226	271	326
ASH, WASTE DISPOSAL	22	27	32	39	46	56	67	80	96	115	138
PROPERTY TAXES & INSURANCE	20	22	24	27	31	35	40	46	53	62	72
GENERAL AND ADMINISTRATIVE	5	6	7	9	10	12	15	18	21	26	31
***** TOTAL EXPENSES BEFORE DEBT PAYMENT	149	177	210	251	299	356	426	509	609	728	872
***** NET PRE-DEBT OPERATING BENEFIT (000 Lps)	670	746	837	947	1,079	1,237	1,426	1,654	1,927	2,254	2,647
PROJECT DEBT PAYMENTS (000 Lps.)	0	0	0	0	0	0	0	0	0	0	0
***** NET CASH AVAILABLE (000 Lps.)	670	746	837	947	1,079	1,237	1,426	1,654	1,927	2,254	2,647
***** DEBT COVERAGE RATIO	#N/A	#N/A	#N/A	#N/A	#N/A	#N/A	#N/A	#N/A	#N/A	#N/A	#N/A

OVERALL PROJECT SUMMARY, Page 2

SYSTEM COSTS AND VALUE, LOCAL CURRENCY

Installed Facilities Cost	5,072	mLps.
Total Capital Cost	5,605	mLps.
Initial Fuel Cost	0.000	Lps/kWh
Initial O&M Cost	0.101	Lps/kWh
Project NPV (pre-debt, 30% DR)	3,139	mLps.

SYSTEM COSTS AND VALUE EXPRESSED IN DOLLARS

Installed Facilities Cost	870	m$s
Total Capital Cost	961	m$s
Initial Fuel Cost	0.000	$/kWh
Initial O&M Cost	0.016	$/kWh
Project NPV (pre-debt, 30% DR)	538	m$s

INVESTMENT PERFORMANCE

Investment Payback	6.1	yrs
Pre-Tax IRR (%)	16.5%	

COGENERATION SYSTEM OPERATING PARAMETERS

Ave. Fuel Use	18.89	mmBtu/hr
Ave. Capacity, Gross	414	kW
Average Site Load	124	kW
Average Offsite Sales	290	kW
Peak Offsite Sales	987	kWh/yr
Heat Rate, ave.	45,508	Btu/kWh
Heat Rate, peak, sawmill	50,269	Btu/kWh
Heat Rate, peak, no saw	50,269	Btu/kWh
Heat Rate, off-peak	#N/A	Btu/kWh
Operating Hours-yr 1	3,944	
Operating Hours-yr 2	3,944	
Ave Debt Coverage Ratio	#N/A	
Kiln Steam Use	351	lb/hr

DATA BY TIME-OF-USE PERIOD

	Ann. Hours	Avail	Hrs Yr 1	Hrs Yr 2	kW Sales	Fuel BDT/hr	Revenue Lempira/kWh
Peak, Sawmill Operating	2,400	100.0%	2,400	2,400	211	0.95	0.30
Peak, no Sawmill	1,662	92.9%	1,544	1,544	311	0.95	0.30
Off Peak, no Sawmill	4,698	0.0%	0	0	0	0.03	0.23

PROJECT REVENUES, Page 3

PROJECT REVENUES/SAVINGS (mLempira/yr)	1993	1994	1995	1996	1997	1998	1999	2000	2001	2002	2003
ANNUAL SYSTEM CAPACITY FACTOR	45.0%	45.0%	45.0%	45.0%	45.0%	45.0%	45.0%	45.0%	45.0%	45.0%	45.0%
TOTAL ELECTRIC ENERGY OUTPUT (mkWh/YR)	1,480	1,480	1,480	1,480	1,480	1,480	1,480	1,480	1,480	1,480	1,480
PEAK CAPACITY CONTRIBUTION TO ENEE (kW)	353	353	353	353	353	353	353	353	353	353	353
PEAK ELECTRIC SALES PRICE (Lempira/kWh)	0.30	0.36	0.43	0.52	0.62	0.74	0.89	1.07	1.28	1.54	1.85
PEAK CAPACITY SALES PRICE (Lps/kW-y)	847	847	847	847	847	847	847	847	847	847	847
OFF-PEAK ELECTRIC SALES PRICE (Lempira/kWh)	0.23	0.25	0.27	0.30	0.33	0.36	0.40	0.44	0.48	0.53	0.58
AVOIDED DIESEL FUEL USE (gal/yr)	0	0	0	0	0	0	0	0	0	0	0
DIESEL FUEL PRICE (Lempira/gal)	9.99	11.99	14.39	17.27	20.72	24.87	29.84	35.81	42.97	51.56	61.88
ANNUAL DIESEL O&M AND DEPRECIATION	0	0	0	0	0	0	0	0	0	0	0
AVOIDED PURCHASE OF ENEE POWER (mLps/yr)	37	44	53	64	76	91	110	132	158	190	228
KILN-RELATED ENHANCED REVENUES (mLps/yr)	189	227	272	327	392	470	564	677	813	975	1,171
PROJECT OPERATING EXPENSES (mLempira/yr)											
FUELWOOD CONSUMPTION (1000 ton/Yr)	3.74	3.74	3.74	3.74	3.74	3.74	3.74	3.74	3.74	3.74	3.74
FUELWOOD COST (Lempira/ton)	0.00	0.00	0.00	0.00	0.00	0.00	0.00	0.00	0.00	0.00	0.00
FUELWOOD COST ESCALATION RATE	20.0%	20.0%	20.0%	20.0%	20.0%	20.0%	20.0%	20.0%	20.0%	20.0%	20.0%
OPERATING LABOR	49	59	71	85	102	123	147	177	212	254	305
REPAIRS AND MAINTENANCE	53	63	76	91	109	131	157	188	226	271	326
OPERATING SUPPLIES	22	27	32	39	46	56	67	80	96	115	138
GENERAL AND ADMINISTRATIVE, MISC.	5	6	7	9	10	12	15	18	21	26	31
INSURANCE	10	12	14	17	21	25	30	36	43	52	62
PROPERTY TAXES	10	10	10	10	10	10	10	10	10	10	10
FINANCIAL ASSUMPTIONS											
GENERAL INFLATION RATE	20.0%	20.0%	20.0%	20.0%	20.0%	20.0%	20.0%	20.0%	20.0%	20.0%	20.0%
DOMESTIC ENERGY INFLATION RATE	20.0%	20.0%	20.0%	20.0%	20.0%	20.0%	20.0%	20.0%	20.0%	20.0%	20.0%
LEMPIRA TO $ CONVERSION RATE	6.41	7.05	7.76	8.54	9.39	10.33	11.36	12.50	13.75	15.12	16.63

PROJECT CAPITAL COSTS AND FINANCING, Page 4

CAPITAL COST REQUIREMENTS	m$s	mLemps
Equipment, Spares, Duties	426	245
Civil, Buildings, Structures	0	491
Erection and Construction	18	476
Engineering and Supervision	18	1,170
Start-Up, Contingency	16	119
Construction Interest and Fees	20	206
TOTAL CAPITAL, EACH CURRENCY	497	2,708
TOTAL CAPITAL, BOTH CURRENCIES	961	5,605

(1 $ = 5.83 Lps. (1992))

CONSTRUCTION FINANCING PARAMETERS	
Construction Interest Rate	12.00%
Funds Commitment Fee	1.0%
Construction/Startup (Quarters)	4.0
Project Funding Date	Jan-92
Project Startup Date	Jan-93

DEBT SCHEDULES	BASIS	RATE	TERM	1993	1994	1995	1996	1997	1998	1999	2000	2001	2002	2003
$ Debt	0	6.5%	5	0	0	0	0	0	0	0	0	0	0	0
Lemp. Debt	0	23.0%	5	0	0	0	0	0	0	0	0	0	0	0
Total Debt in mLempira				0	0	0	0	0	0	0	0	0	0	0

EQUITY SCHEDULES			1993	1994	1995	1996	1997	1998	1999	2000	2001	2002	2003
Cash Available for Distribution, mLemp			670	746	837	947	1,079	1,237	1,426	1,654	1,927	2,254	2,647
	percent	equity											
Honduran Distributions, mLempir	50.0%	2,708	335	373	419	474	539	618	713	827	963	1,127	1,324
Intl. Distributions, m$	50.0%	497	52	53	54	55	57	60	63	66	70	75	80
COVERAGE RATIO FOR AVE CALCULATION			#N/A	#N/A	#N/A	#N/A	#N/A	#N/A	#N/A	#N/A	#N/A	#N/A	#N/A
COVERAGE RATIO FOR MIN CALCULATION			#N/A	#N/A	#N/A	#N/A	#N/A	#N/A	#N/A	#N/A	#N/A	#N/A	#N/A

Summer Months, Year 1: 6
Winter Months, Year 1: 6

RFORMANCE SUMMARY, Page 5

NTHLY HOURS	JAN	FEB	MAR	APR	MAY	JUN	JUL	AUG	SEP	OCT	NOV	DEC	TOTAL
Scheduled Outage	396	352	400	386	396	390	396	386	386	396	390	542	4,816
Operating Total	348	320	344	334	348	330	348	358	334	348	330	202	3,944
Sawmill Operating Hours	203	205	233	181	234	234	192	202	176	184	195	161	2,400
OSS ELECTRICAL OUTPUT (kW)													
Peak, Sawmill Operating	375	336	454	456	427	437	437	436	436	314	113	282	
Peak, no Sawmill	375	336	454	456	427	437	437	436	436	314	113	282	
Off Peak, no Sawmill	0	0	0	0	0	0	0	0	0	0	0	0	
WMILL, KILN AND STATION LOAD (kW)													
Peak, Sawmill Operating	206	192	211	193	184	172	166	162	138	130	106	123	
Peak, no Sawmill	69	68	73	73	71	72	72	72	72	67	57	65	
Off Peak, no Sawmill	0	0	0	0	0	0	0	0	0	0	0	0	
ECTRICAL OFFSITE SALES (kW)													
Peak, Sawmill Operating	169	144	243	262	244	265	271	273	297	184	7	159	
Peak, no Sawmill	306	269	381	383	356	365	365	364	364	247	56	217	
Off Peak, no Sawmill	0	0	0	0	0	0	0	0	0	0	0	0	
EL CONSUMPTION (BDT/hr) @	9950 Btu/lb		0.03 BDT/hr kiln loa			351 lb/hr steam to kiln							
Peak, Sawmill Operating	0.95	0.87	1.12	1.12	1.06	1.08	1.08	1.08	1.08	0.82	0.40	0.75	
Peak, no Sawmill	0.95	0.87	1.12	1.12	1.06	1.08	1.08	1.08	1.08	0.82	0.40	0.75	
Off Peak, no Sawmill	0.03	0.03	0.03	0.03	0.03	0.03	0.03	0.03	0.03	0.03	0.03	0.03	

KILN-RELATED REVENUES, Page 6

Teupasenti Sawmill Data

Freight Loads that Can be Carried on a 40 Foot Flat-Bed Truck

1. Dressed (surfaced) lumber

green	18,000	bf/load		
dried	22,000	bf/load	22.2%	more per load

2. Rough (unsurfaced) lumber

green	10,000	bf/load		
dried	12,000	bf/load	20.0%	more per load

Total Product Production from Sawmill: 2,987 mbf/yr (1990)

Product Category	1990 (%)	1990 mbf/y	with kiln (%)	with kiln mbf/y	Value Lps/bf)	Freight Lps/bf)	net prod value (mLps/y) 1990	net prod value (mLps/y) kiln
#1-Grade for factory, green	7.2%	216	0.0%	0	1.590	0.095	323	0
#1-Grade for factory, dry	0.0%	0	7.2%	216	1.840	0.076	0	381
#1-Grade for export, green	7.2%	216	0.0%	0	1.590	0.160	309	0
#1-Grade for export, dry	0.0%	0	7.8%	232	1.840	0.128	0	397
Panneling, Flooring, green	80.5%	2,405	75.2%	2,245	1.255	0.103	2,771	2,586
Panneling, Flooring, dry	0.0%	0	4.8%	144	1.255	0.080	0	170
#2-Grade Lumber, rough green	5.0%	149	5.0%	149	1.190	0.185	150	150
#2-Grade Lumber, rough dry	0.0%	0	0.0%	0	1.190	0.148	0	0
Mill Total							3,553	3,684
Total Benefit Due to Dry Kiln, mLps/y, 1991 Lps								131

APPENDIX C3:
Detailed Economic Simulation
Option III
Peaking System With Double Track Kiln

03-Aug-92 TEUPASENTI SAWMILL WOOD ENERGY PROJECT

Option III: Peaking System with Double Track Kiln

PROFORMA STATEMENT OF INCOME AND CAPITAL, Page 1

(first operating year begins on January 1)

	1993	1994	1995	1996	1997	1998	1999	2000	2001	2002	2003
REVENUES/SAVINGS (000 Lps.)											
ELECTRICAL ENERGY SALES	439	480	530	590	661	747	850	973	1,122	1,300	1,513
AVOIDED DIESEL GENERATION COSTS	0	0	0	0	0	0	0	0	0	0	0
AVOIDED PURCHASE OF ENEE POWER	12	14	17	20	24	29	35	42	50	60	72
KILN-RELATED REVENUES	455	546	655	786	944	1,132	1,359	1,631	1,957	2,348	2,818
***** TOTAL REVENUES	906	1,040	1,202	1,396	1,629	1,908	2,243	2,646	3,128	3,708	4,403
EXPENSES (000 Lps.)											
PURCHASED BIOMASS FUEL	0	0	0	0	0	0	0	0	0	0	0
OPERATING LABOR	53	63	76	91	109	131	157	188	226	271	326
REPAIRS AND MAINTENANCE	55	66	80	95	114	137	165	198	237	285	342
ASH, WASTE DISPOSAL	25	30	36	43	52	62	75	89	107	129	155
PROPERTY TAXES & INSURANCE	20	22	24	27	31	35	40	46	53	62	72
GENERAL AND ADMINISTRATIVE	5	6	7	9	10	12	15	18	21	26	31
***** TOTAL EXPENSES BEFORE DEBT PAYMENT	158	187	223	265	316	378	451	539	645	772	925
***** NET PRE-DEBT OPERATING BENEFIT (000 Lps)	748	853	979	1,131	1,312	1,530	1,792	2,106	2,483	2,935	3,478
PROJECT DEBT PAYMENTS (000 Lps.)	0	0	0	0	0	0	0	0	0	0	0
***** NET CASH AVAILABLE (000 Lps.)	748	853	979	1,131	1,312	1,530	1,792	2,106	2,483	2,935	3,478
***** DEBT COVERAGE RATIO	#N/A	#N/A	#N/A	#N/A	#N/A	#N/A	#N/A	#N/A	#N/A	#N/A	#N/A

OVERALL PROJECT SUMMARY, Page 2

SYSTEM COSTS AND VALUE, LOCAL CURRENCY

Installed Facilities Cost	5,320	mLps.
Total Capital Cost	5,871	mLps.
Initial Fuel Cost	0.000	Lps/kWh
Initial O&M Cost	0.136	Lps/kWh
Project NPV (pre-debt, 30% DR)	3,777	mLps.

SYSTEM COSTS AND VALUE EXPRESSED IN DOLLARS

Installed Facilities Cost	913	m$s
Total Capital Cost	1,007	m$s
Initial Fuel Cost	0.000	$/kWh
Initial O&M Cost	0.021	$/kWh
Project NPV (pre-debt, 30% DR)	648	m$s

INVESTMENT PERFORMANCE

Investment Payback	5.6	yrs
Pre-Tax IRR (%)	19.7%	

COGENERATION SYSTEM OPERATING PARAMETERS

Ave. Fuel Use	16.97	mmBtu/hr
Ave. Capacity, Gross	333	kW
Average Site Load	122	kW
Average Offsite Sales	211	kW
Peak Offsite Sales	694	kWh/yr
Heat Rate, ave.	50,562	Btu/kWh
Heat Rate, peak, sawmill	57,256	Btu/kWh
Heat Rate, peak, no saw	57,256	Btu/kWh
Heat Rate, off-peak	#N/A	Btu/kWh
Operating Hours-yr 1	3,944	
Operating Hours-yr 2	3,944	
Ave Debt Coverage Ratio	#N/A	
Kiln Steam Use	1,252	lb/hr

DATA BY TIME-OF-USE PERIOD

	Ann. Hours	Avail	Hrs Yr 1	Hrs Yr 2	kW Sales	Fuel BDT/hr	Revenue Lempira/kWh
Peak, Sawmill Operating	2,400	100.0%	2,400	2,400	140	0.85	0.30
Peak, no Sawmill	1,662	92.9%	1,544	1,544	232	0.85	0.30
Off Peak, no Sawmill	4,698	0.0%	0	0	0	0.12	0.23

PROJECT REVENUES, Page 3

PROJECT REVENUES/SAVINGS (mLempira/yr)	1993	1994	1995	1996	1997	1998	1999	2000	2001	2002	2003
ANNUAL SYSTEM CAPACITY FACTOR	45.0%	45.0%	45.0%	45.0%	45.0%	45.0%	45.0%	45.0%	45.0%	45.0%	45.0%
TOTAL ELECTRIC ENERGY OUTPUT (mkWh/YR)	1,161	1,161	1,161	1,161	1,161	1,161	1,161	1,161	1.161	1,161	1,161
PEAK CAPACITY CONTRIBUTION TO ENEE (kW)	274	274	274	274	274	274	274	274	274	274	274
PEAK ELECTRIC SALES PRICE (Lempira/kWh)	0.30	0.36	0.43	0.52	0.62	0.74	0.89	1.07	1.28	1.54	1.85
PEAK CAPACITY SALES PRICE (Lps/kW-y)	847	847	847	847	847	847	847	847	847	847	847
OFF-PEAK ELECTRIC SALES PRICE (Lempira/kWh)	0.23	0.25	0.27	0.30	0.33	0.36	0.40	0.44	0.48	0.53	0.58
AVOIDED DIESEL FUEL USE (gal/yr)	0	0	0	0	0	0	0	0	0	0	0
DIESEL FUEL PRICE (Lempira/gal)	9.99	11.99	14.39	17.27	20.72	24.87	29.84	35.81	42.97	51.56	61.88
ANNUAL DIESEL O&M AND DEPRECIATION	0	0	0	0	0	0	0	0	0	0	0
AVOIDED PURCHASE OF ENEE POWER (mLps/yr)	12	14	17	20	24	29	35	42	50	60	72
KILN-RELATED ENHANCED REVENUES (mLps/yr)	455	546	655	786	944	1,132	1,359	1,631	1,957	2,348	2,818
PROJECT OPERATING EXPENSES (mLempira/yr)											
FUELWOOD CONSUMPTION (1000 ton/Yr)	3.36	3.36	3.36	3.36	3.36	3.36	3.36	3.36	3.36	3.36	3.36
FUELWOOD COST (Lempira/ton)	0.00	0.00	0.00	0.00	0.00	0.00	0.00	0.00	0.00	0.00	0.00
FUELWOOD COST ESCALATION RATE	20.0%	20.0%	20.0%	20.0%	20.0%	20.0%	20.0%	20.0%	20.0%	20.0%	20.0%
OPERATING LABOR	53	63	76	91	109	131	157	188	226	271	326
REPAIRS AND MAINTENANCE	55	66	80	95	114	137	165	198	237	285	342
OPERATING SUPPLIES	25	30	36	43	52	62	75	89	107	129	155
GENERAL AND ADMINISTRATIVE, MISC.	5	6	7	9	10	12	15	18	21	26	31
INSURANCE	10	12	14	17	21	25	30	36	43	52	62
PROPERTY TAXES	10	10	10	10	10	10	10	10	10	10	10
FINANCIAL ASSUMPTIONS											
GENERAL INFLATION RATE	20.0%	20.0%	20.0%	20.0%	20.0%	20.0%	20.0%	20.0%	20.0%	20.0%	20.0%
DOMESTIC ENERGY INFLATION RATE	20.0%	20.0%	20.0%	20.0%	20.0%	20.0%	20.0%	20.0%	20.0%	20.0%	20.0%
LEMPIRA TO $ CONVERSION RATE	6.41	7.05	7.76	8.54	9.39	10.33	11.36	12.50	13.75	15.12	16.63

PROJECT CAPITAL COSTS AND FINANCING, Page 4

CAPITAL COST REQUIREMENTS	m$s	mLemps
Equipment, Spares, Duties	440	249
Civil, Buildings, Structures	0	590
Erection and Construction	18	486
Engineering and Supervision	18	1,227
Start-Up, Contingency	16	119
Construction Interest and Fees	20	220
TOTAL CAPITAL, EACH CURRENCY	511	2,893
TOTAL CAPITAL, BOTH CURRENCIES	1,007	5,871

(1 $ = 5.83 Lps. (1992))

CONSTRUCTION FINANCING PARAMETERS	
Construction Interest Rate	12.00%
Funds Commitment Fee	1.0%
Construction/Startup (Quarters)	4.0
Project Funding Date	Jan-92
Project Startup Date	Jan-93

DEBT SCHEDULES	BASIS	RATE	TERM	1993	1994	1995	1996	1997	1998	1999	2000	2001	2002	2003
$ Debt	0	6.5%	5	0	0	0	0	0	0	0	0	0	0	0
Lemp. Debt	0	23.0%	5	0	0	0	0	0	0	0	0	0	0	0
Total Debt in mLempira				0	0	0	0	0	0	0	0	0	0	0

EQUITY SCHEDULES			1993	1994	1995	1996	1997	1998	1999	2000	2001	2002	2003
Cash Available for Distribution, mLemp			748	853	979	1,131	1,312	1,530	1,792	2,106	2,483	2,935	3,478
	percent	equity											
Honduran Distributions, mLempir.	50.0%	2,893	374	427	490	565	656	765	896	1,053	1,241	1,468	1,739
Intl. Distributions, m$	50.0%	511	58	60	63	66	70	74	79	84	90	97	105
COVERAGE RATIO FOR AVE CALCULATION			#N/A	#N/A	#N/A	#N/A	#N/A	#N/A	#N/A	#N/A	#N/A	#N/A	#N/A
COVERAGE RATIO FOR MIN CALCULATION			#N/A	#N/A	#N/A	#N/A	#N/A	#N/A	#N/A	#N/A	#N/A	#N/A	#N/A

Summer Months, Year 1: 6
Winter Months, Year 1: 6

PERFORMANCE SUMMARY, Page 5

MONTHLY HOURS	JAN	FEB	MAR	APR	MAY	JUN	JUL	AUG	SEP	OCT	NOV	DEC	TOTAL
Scheduled Outage	396	352	400	386	396	390	396	386	386	396	390	542	4,816
Operating Total	348	320	344	334	348	330	348	358	334	348	330	202	3,944
Sawmill Operating Hours	203	205	233	181	234	234	192	202	176	184	195	161	2,400
GROSS ELECTRICAL OUTPUT (kW)													
Peak, Sawmill Operating	298	258	373	374	347	399	313	397	311	232	31	198	
Peak, no Sawmill	298	258	373	374	347	399	313	397	311	232	31	198	
Off Peak, no Sawmill	0	0	0	0	0	0	0	0	0	0	0	0	
SAWMILL, KILN AND STATION LOAD (kW)													
Peak, Sawmill Operating	204	190	209	191	182	172	162	162	134	128	104	121	
Peak, no Sawmill	67	66	71	71	69	72	68	72	68	64	55	63	
Off Peak, no Sawmill	0	0	0	0	0	0	0	0	0	0	0	0	
ELECTRICAL OFFSITE SALES (kW)													
Peak, Sawmill Operating	94	68	165	182	165	228	152	235	177	104	0	77	
Peak, no Sawmill	230	192	302	303	277	328	245	325	243	168	0	135	
Off Peak, no Sawmill	0	0	0	0	0	0	0	0	0	0	0	0	
FUEL CONSUMPTION (BDT/hr) @	9950 Btu/lb		0.12 BDT/hr kiln load			1,252 lb/hr steam to kiln							
Peak, Sawmill Operating	0.86	0.78	1.02	1.02	0.96	1.07	0.89	1.07	0.89	0.72	0.30	0.66	
Peak, no Sawmill	0.86	0.78	1.02	1.02	0.96	1.07	0.89	1.07	0.89	0.72	0.30	0.66	
Off Peak, no Sawmill	0.12	0.12	0.12	0.12	0.12	0.12	0.12	0.12	0.12	0.12	0.12	0.12	

KILN-RELATED REVENUES, Page 6

Teupasenti Sawmill Data

Freight Loads that Can be Carried on a 40 Foot Flat-Bed Truck

1. Dressed (surfaced) lumber

green	18,000	bf/load		
dried	22,000	bf/load	22.2%	more per load

2. Rough (unsurfaced) lumber

green	10,000	bf/load		
dried	12,000	bf/load	20.0%	more per load

Total Product Production from Sawmill: 2,987 mbf/yr (1990)

Product Category	1990 (%)	1990 mbf/y	with kiln (%)	with kiln mbf/y	Value Lps/bf)	Freight Lps/bf)	net prod value (mLps/y) 1990	net prod value (mLps/y) kiln
#1-Grade for factory, green	7.2%	216	0.0%	0	1.590	0.095	323	0
#1-Grade for factory, dry	0.0%	0	7.2%	216	1.840	0.076	0	381
#1-Grade for export, green	7.2%	216	0.0%	0	1.590	0.160	309	0
#1-Grade for export, dry	0.0%	0	15.7%	470	1.840	0.128	0	805
Panneling, Flooring, green	80.5%	2,405	0.0%	0	1.255	0.103	2,771	0
Panneling, Flooring, dry	0.0%	0	72.0%	2,151	1.255	0.080	0	2,528
#2-Grade Lumber, rough green	5.0%	149	0.0%	0	1.190	0.185	150	0
#2-Grade Lumber, rough dry	0.0%	0	5.0%	149	1.190	0.148	0	156
Mill Total							3,553	3,869
Total Benefit Due to Dry Kiln, mLps/y, 1991 Lps								316

APPENDIX C4:
Detailed Economic Simulation
Option IV
Baseload System Without Kiln

03-Aug-92 TEUPASENTI SAWMILL WOOD ENERGY PROJECT

Option IV: Base-Load System without Kiln

PROFORMA STATEMENT OF INCOME AND CAPITAL, Page 1

(first operating year begins on January 1)

	1993	1994	1995	1996	1997	1998	1999	2000	2001	2002	2003
REVENUES/SAVINGS (000 Lps.)											
ELECTRICAL ENERGY SALES	473	516	567	627	699	784	885	1,004	1,146	1,315	1,516
AVOIDED DIESEL GENERATION COSTS	0	0	0	0	0	0	0	0	0	0	0
AVOIDED PURCHASE OF ENEE POWER	164	197	236	283	340	408	490	588	705	847	1,016
KILN-RELATED REVENUES	0	0	0	0	0	0	0	0	0	0	0
***** TOTAL REVENUES	637	713	803	911	1,039	1,192	1,374	1,592	1,852	2,162	2,532
EXPENSES (000 Lps.)											
PURCHASED BIOMASS FUEL	0	0	0	0	0	0	0	0	0	0	0
OPERATING LABOR	85	103	123	148	177	213	255	306	367	441	529
REPAIRS AND MAINTENANCE	42	50	61	73	87	105	126	151	181	217	260
ASH, WASTE DISPOSAL	18	22	27	32	38	46	55	66	79	95	114
PROPERTY TAXES & INSURANCE	20	22	24	27	31	35	40	46	53	62	72
GENERAL AND ADMINISTRATIVE	5	6	7	9	10	12	15	18	21	26	31
***** TOTAL EXPENSES BEFORE DEBT PAYMENT	171	203	242	288	344	410	490	587	702	840	1,006
***** NET PRE-DEBT OPERATING BENEFIT (000 Lps)	466	510	561	623	696	782	884	1,005	1,150	1,321	1,526
PROJECT DEBT PAYMENTS (000 Lps.)	0	0	0	0	0	0	0	0	0	0	0
***** NET CASH AVAILABLE (000 Lps.)	466	510	561	623	696	782	884	1,005	1,150	1,321	1,526
***** DEBT COVERAGE RATIO	#N/A	#N/A	#N/A	#N/A	#N/A	#N/A	#N/A	#N/A	#N/A	#N/A	#N/A

OVERALL PROJECT SUMMARY, Page 2

SYSTEM COSTS AND VALUE, LOCAL CURRENCY

Installed Facilities Cost	3,406	mLps.
Total Capital Cost	3,764	mLps.
Initial Fuel Cost	0.000	Lps/kWh
Initial O&M Cost	0.111	Lps/kWh
Project NPV (pre-debt, 30% DR)	2,036	mLps.

SYSTEM COSTS AND VALUE EXPRESSED IN DOLLARS

Installed Facilities Cost	584	m$s
Total Capital Cost	646	m$s
Initial Fuel Cost	0.000	$/kWh
Initial O&M Cost	0.017	$/kWh
Project NPV (pre-debt, 30% DR)	349	m$s

INVESTMENT PERFORMANCE

Investment Payback	6.1	yrs
Pre-Tax IRR (%)	15.4%	

COGENERATION SYSTEM OPERATING PARAMETERS

Ave. Fuel Use	9.32	mmBtu/hr
Ave. Capacity, Gross	200	kW
Average Site Load	72	kW
Average Offsite Sales	129	kW
Peak Offsite Sales	594	kWh/yr
Heat Rate, ave.	46,546	Btu/kWh
Heat Rate, peak, sawmill	49,555	Btu/kWh
Heat Rate, peak, no saw	49,555	Btu/kWh
Heat Rate, off-peak	54,018	Btu/kWh
Operating Hours-yr 1	8,424	
Operating Hours-yr 2	8,424	
Ave Debt Coverage Ratio	#N/A	
Kiln Steam Use	0	lb/hr

DATA BY TIME-OF-USE PERIOD

	Ann. Hours	Avail	Hrs Yr 1	Hrs Yr 2	kW Sales	Fuel BDT/hr	Revenue Lempira/kWh
Peak, Sawmill Operating	2,400	100.0%	2,400	2,400	113	0.65	0.30
Peak, no Sawmill	1,662	92.9%	1,544	1,544	210	0.65	0.30
Off Peak, no Sawmill	4,698	95.4%	4,480	4,480	77	0.31	0.23

PROJECT REVENUES, Page 3

PROJECT REVENUES/SAVINGS (mLempira/yr)	1993	1994	1995	1996	1997	1998	1999	2000	2001	2002	2003
ANNUAL SYSTEM CAPACITY FACTOR	96.2%	96.2%	96.2%	96.2%	96.2%	96.2%	96.2%	96.2%	96.2%	96.2%	96.2%
TOTAL ELECTRIC ENERGY OUTPUT (mkWh/YR)	1,538	1,538	1,538	1,538	1,538	1,538	1,538	1,538	1,538	1,538	1,538
PEAK CAPACITY CONTRIBUTION TO ENEE (kW)	257	257	257	257	257	257	257	257	257	257	257
PEAK ELECTRIC SALES PRICE (Lempira/kWh)	0.30	0.36	0.43	0.52	0.62	0.74	0.89	1.07	1.28	1.54	1.85
PEAK CAPACITY SALES PRICE (Lps/kW-y)	847	847	847	847	847	847	847	847	847	847	847
OFF-PEAK ELECTRIC SALES PRICE (Lempira/kWh)	0.23	0.25	0.27	0.30	0.33	0.36	0.40	0.44	0.48	0.53	0.58
AVOIDED DIESEL FUEL USE (gal/yr)	0	0	0	0	0	0	0	0	0	0	0
DIESEL FUEL PRICE (Lempira/gal)	9.99	11.99	14.39	17.27	20.72	24.87	29.84	35.81	42.97	51.56	61.88
ANNUAL DIESEL O&M AND DEPRECIATION	0	0	0	0	0	0	0	0	0	0	0
AVOIDED PURCHASE OF ENEE POWER (mLps/yr)	164	197	236	283	340	408	490	588	705	847	1,016
KILN-RELATED ENHANCED REVENUES (mLps/yr)	0	0	0	0	0	0	0	0	0	0	0
PROJECT OPERATING EXPENSES (mLempira/yr)											
FUELWOOD CONSUMPTION (1000 ton/Yr)	3.95	3.95	3.95	3.95	3.95	3.95	3.95	3.95	3.95	3.95	3.95
FUELWOOD COST (Lempira/ton)	0.00	0.00	0.00	0.00	0.00	0.00	0.00	0.00	0.00	0.00	0.00
FUELWOOD COST ESCALATION RATE	20.0%	20.0%	20.0%	20.0%	20.0%	20.0%	20.0%	20.0%	20.0%	20.0%	20.0%
OPERATING LABOR	85	103	123	148	177	213	255	306	367	441	529
REPAIRS AND MAINTENANCE	42	50	61	73	87	105	126	151	181	217	260
OPERATING SUPPLIES	18	22	27	32	38	46	55	66	79	95	114
GENERAL AND ADMINISTRATIVE, MISC.	5	6	7	9	10	12	15	18	21	26	31
INSURANCE	10	12	14	17	21	25	30	36	43	52	62
PROPERTY TAXES	10	10	10	10	10	10	10	10	10	10	10
FINANCIAL ASSUMPTIONS											
GENERAL INFLATION RATE	20.0%	20.0%	20.0%	20.0%	20.0%	20.0%	20.0%	20.0%	20.0%	20.0%	20.0%
DOMESTIC ENERGY INFLATION RATE	20.0%	20.0%	20.0%	20.0%	20.0%	20.0%	20.0%	20.0%	20.0%	20.0%	20.0%
LEMPIRA TO $ CONVERSION RATE	6.41	7.05	7.76	8.54	9.39	10.33	11.36	12.50	13.75	15.12	16.63

PROJECT CAPITAL COSTS AND FINANCING, Page 4

CAPITAL COST REQUIREMENTS	m$s	mLemps
Equipment, Spares, Duties	282	167
Civil, Buildings, Structures	0	341
Erection and Construction	13	328
Engineering and Supervision	11	785
Start-Up, Contingency	10	81
Construction Interest and Fees	13	140
TOTAL CAPITAL, EACH CURRENCY	329	1,843
TOTAL CAPITAL, BOTH CURRENCIES	646	3,764

(1 $ = 5.83 Lps. (1992))

CONSTRUCTION FINANCING PARAMETERS	
Construction Interest Rate	12.00%
Funds Commitment Fee	1.0%
Construction/Startup (Quarters)	4.0
Project Funding Date	Jan-92
Project Startup Date	Jan-93

DEBT SCHEDULES	BASIS	RATE	TERM	1993	1994	1995	1996	1997	1998	1999	2000	2001	2002	2003
$ Debt	0	6.5%	5	0	0	0	0	0	0	0	0	0	0	0
Lemp. Debt	0	23.0%	5	0	0	0	0	0	0	0	0	0	0	0
Total Debt in mLempira				0	0	0	0	0	0	0	0	0	0	0

EQUITY SCHEDULES

Cash Available for Distribution, mLemp			466	510	561	623	696	782	884	1,005	1,150	1,321	1,526
	percent	equity											
Honduran Distributions, mLempir.	50.0%	1,843	233	255	281	311	348	391	442	503	575	661	763
Intl. Distributions, m$	50.0%	329	36	36	36	36	37	38	39	40	42	44	46

COVERAGE RATIO FOR AVE CALCULATION	#N/A	#N/A	#N/A	#N/A	#N/A	#N/A	#N/A	#N/A	#N/A	#N/A	#N/A
COVERAGE RATIO FOR MIN CALCULATION	#N/A	#N/A	#N/A	#N/A	#N/A	#N/A	#N/A	#N/A	#N/A	#N/A	#N/A

Summer Months, Year 1: 6
Winter Months, Year 1: 6

104

PERFORMANCE SUMMARY, Page 5

MONTHLY HOURS	JAN	FEB	MAR	APR	MAY	JUN	JUL	AUG	SEP	OCT	NOV	DEC	TOTAL
Scheduled Outage	24	0	0	0	0	0	0	0	0	0	0	312	336
Operating Total	720	672	744	720	744	720	744	744	720	744	720	432	8,424
Sawmill Operating Hours	203	205	233	181	234	234	192	202	176	184	195	161	2,400
GROSS ELECTRICAL OUTPUT (kW)													
Peak, Sawmill Operating	268	268	268	268	268	268	268	268	268	268	165	268	
Peak, no Sawmill	268	268	268	268	268	268	268	268	268	268	165	268	
Off Peak, no Sawmill	116	72	261	74	153	193	124	208	121	45	0	13	
SAWMILL, KILN AND STATION LOAD (kW)													
Peak, Sawmill Operating	186	174	187	170	162	149	143	140	116	113	94	107	
Peak, no Sawmill	50	50	50	50	50	50	50	50	50	50	45	50	
Off Peak, no Sawmill	43	41	49	41	45	46	43	47	43	40	17	39	
ELECTRICAL OFFSITE SALES (kW)													
Peak, Sawmill Operating	82	94	81	98	106	119	125	128	152	155	71	161	
Peak, no Sawmill	218	218	210	218	218	218	218	218	218	218	120	218	
Off Peak, no Sawmill	73	31	212	33	108	147	81	161	78	5	0	0	
FUEL CONSUMPTION (BDT/hr) @	9950 Btu/lb		0.00 BDT/hr kiln loa				0 lb/hr steam to kiln						
Peak, Sawmill Operating	0.65	0.65	0.65	0.65	0.65	0.65	0.65	0.65	0.65	0.65	0.65	0.65	
Peak, no Sawmill	0.65	0.65	0.65	0.65	0.65	0.65	0.65	0.65	0.65	0.65	0.65	0.65	
Off Peak, no Sawmill	0.31	0.23	0.63	0.24	0.39	0.48	0.33	0.51	0.32	0.18	0.00	0.13	

KILN-RELATED REVENUES, Page 6

Teupasenti Sawmill Data

Freight Loads that Can be Carried on a 40 Foot Flat-bed Truck

1. Dressed (surfaced) lumber

green	18,000	bf/load		
dried	22,000	bf/load	22.2%	more per load

2. Rough (unsurfaced) lumber

green	10,000	bf/load		
dried	12,000	bf/load	20.0%	more per load

Total Product Production from Sawmill: 2,987 mbf/yr (1990)

Product Category	1990 (%)	1990 mbf/y	with kiln (%)	with kiln mbf/y	Value Lps/bf)	Freight Lps/bf)	net prod value (mLps/y) 1990	net prod value (mLps/y) kiln
#1-Grade for factory, green	7.2%	216	7.2%	216	1.590	0.095	323	323
#1-Grade for factory, dry	0.0%	0	0.0%	0	1.840	0.076	0	0
#1-Grade for export, green	7.2%	216	7.2%	216	1.590	0.160	309	309
#1-Grade for export, dry	0.0%	0	0.0%	0	1.840	0.128	0	0
Panneling, Flooring, green	80.5%	2,405	80.5%	2,405	1.255	0.103	2,771	2,771
Panneling, Flooring, dry	0.0%	0	0.0%	0	1.255	0.080	0	0
#2-Grade Lumber, rough green	5.0%	149	5.0%	149	1.190	0.185	150	150
#2-Grade Lumber, rough dry	0.0%	0	0.0%	0	1.190	0.148	0	0
Mill Total							3,553	3,553
Total Benefit Due to Dry Kiln, mLps/y, 1991 Lps								0

APPENDIX C5:
Detailed Economic Simulation
Option V
Baseload System With Single Track Kiln

03-Aug-92 TEUPASENTI SAWMILL WOOD ENERGY PROJECT

Option V: Base-Load System with Single Track Kiln

PROFORMA STATEMENT OF INCOME AND CAPITAL, Page 1

(first operating year begins on January 1)

	1993	1994	1995	1996	1997	1998	1999	2000	2001	2002	2003
REVENUES/SAVINGS (000 Lps.)											
ELECTRICAL ENERGY SALES	429	467	512	566	629	705	794	901	1,028	1,178	1,358
AVOIDED DIESEL GENERATION COSTS	0	0	0	0	0	0	0	0	0	0	0
AVOIDED PURCHASE OF ENEE POWER	153	184	221	265	318	382	458	550	660	792	950
KILN-RELATED REVENUES	189	227	272	327	392	470	564	677	813	975	1,171
***** TOTAL REVENUES	771	878	1,006	1,158	1,340	1,557	1,817	2,128	2,500	2,946	3,479
EXPENSES (000 Lps.)											
PURCHASED BIOMASS FUEL	0	0	0	0	0	0	0	0	0	0	0
OPERATING LABOR	95	114	137	165	198	237	285	341	410	492	590
REPAIRS AND MAINTENANCE	53	63	76	91	109	131	157	188	226	271	326
ASH, WASTE DISPOSAL	22	27	32	39	46	56	67	80	96	115	138
PROPERTY TAXES & INSURANCE	20	22	24	27	31	35	40	46	53	62	72
GENERAL AND ADMINISTRATIVE	5	6	7	9	10	12	15	18	21	26	31
***** TOTAL EXPENSES BEFORE DEBT PAYMENT	195	232	277	330	394	471	563	674	806	966	1,157
***** NET PRE-DEBT OPERATING BENEFIT (000 Lps)	576	646	729	828	946	1,086	1,254	1,455	1,694	1,980	2,322
PROJECT DEBT PAYMENTS (000 Lps.)	0	0	0	0	0	0	0	0	0	0	0
***** NET CASH AVAILABLE (000 Lps.)	576	646	729	828	946	1,086	1,254	1,455	1,694	1,980	2,322
***** DEBT COVERAGE RATIO	#N/A	#N/A	#N/A	#N/A	#N/A	#N/A	#N/A	#N/A	#N/A	#N/A	#N/A

OVERALL PROJECT SUMMARY, Page 2

SYSTEM COSTS AND VALUE, LOCAL CURRENCY

Installed Facilities Cost	4,137	mLps.
Total Capital Cost	4,582	mLps.
Initial Fuel Cost	0.000	Lps/kWh
Initial O&M Cost	0.137	Lps/kWh
Project NPV (pre-debt, 30% DR)	2,738	mLps.

SYSTEM COSTS AND VALUE EXPRESSED IN DOLLARS

Installed Facilities Cost	710	m$s
Total Capital Cost	786	m$s
Initial Fuel Cost	0.000	$/kWh
Initial O&M Cost	0.021	$/kWh
Project NPV (pre-debt, 30% DR)	470	m$s

INVESTMENT PERFORMANCE

Investment Payback	5.8	yrs
Pre-Tax IRR (%)	17.9%	

COGENERATION SYSTEM OPERATING PARAMETERS

Ave. Fuel Use	9.16	mmBtu/hr
Ave. Capacity, Gross	187	kW
Average Site Load	74	kW
Average Offsite Sales	113	kW
Peak Offsite Sales	534	kWh/yr

Heat Rate, ave.	48,728	Btu/kWh
Heat Rate, peak, sawmill	50,307	Btu/kWh
Heat Rate, peak, no saw	50,307	Btu/kWh
Heat Rate, off-peak	61,092	Btu/kWh

Operating Hours-yr 1	8,424
Operating Hours-yr 2	8,424

Ave Debt Coverage Ratio	#N/A	
Kiln Steam Use	351	lb/hr

DATA BY TIME-OF-USE PERIOD

	Ann. Hours	Avail	Hrs Yr 1	Hrs Yr 2	kW Sales	Fuel BDT/hr	Revenue Lempira/kWh
Peak, Sawmill Operating	2,400	100.0%	2,400	2,400	97	0.63	0.30
Peak, no Sawmill	1,662	92.9%	1,544	1,544	195	0.63	0.30
Off Peak, no Sawmill	4,698	95.4%	4,480	4,480	64	0.31	0.23

PROJECT REVENUES, Page 3

PROJECT REVENUES/SAVINGS (mLempira/yr)	1993	1994	1995	1996	1997	1998	1999	2000	2001	2002	2003
ANNUAL SYSTEM CAPACITY FACTOR	96.2%	96.2%	96.2%	96.2%	96.2%	96.2%	96.2%	96.2%	96.2%	96.2%	96.2%
TOTAL ELECTRIC ENERGY OUTPUT (mkWh/YR)	1,430	1,430	1,430	1,430	1,430	1,430	1,430	1,430	1,430	1,430	1,430
PEAK CAPACITY CONTRIBUTION TO ENEE (kW)	242	242	242	242	242	242	242	242	242	242	242
PEAK ELECTRIC SALES PRICE (Lempira/kWh)	0.30	0.36	0.43	0.52	0.62	0.74	0.89	1.07	1.28	1.54	1.85
PEAK CAPACITY SALES PRICE (Lps/kW-y)	847	847	847	847	847	847	847	847	847	847	847
OFF-PEAK ELECTRIC SALES PRICE (Lempira/kWh)	0.23	0.25	0.27	0.30	0.33	0.36	0.40	0.44	0.48	0.53	0.58
AVOIDED DIESEL FUEL USE (gal/yr)	0	0	0	0	0	0	0	0	0	0	0
DIESEL FUEL PRICE (Lempira/gal)	9.99	11.99	14.39	17.27	20.72	24.87	29.84	35.81	42.97	51.56	61.88
ANNUAL DIESEL O&M AND DEPRECIATION	0	0	0	0	0	0	0	0	0	0	0
AVOIDED PURCHASE OF ENEE POWER (mLps/yr)	153	184	221	265	318	382	458	550	660	792	950
KILN-RELATED ENHANCED REVENUES (mLps/yr)	189	227	272	327	392	470	564	677	813	975	1,171
PROJECT OPERATING EXPENSES (mLempira/yr)											
FUELWOOD CONSUMPTION (1000 ton/Yr)	3.88	3.88	3.88	3.88	3.88	3.88	3.88	3.88	3.88	3.88	3.88
FUELWOOD COST (Lempira/ton)	0.00	0.00	0.00	0.00	0.00	0.00	0.00	0.00	0.00	0.00	0.00
FUELWOOD COST ESCALATION RATE	20.0%	20.0%	20.0%	20.0%	20.0%	20.0%	20.0%	20.0%	20.0%	20.0%	20.0%
OPERATING LABOR	95	114	137	165	198	237	285	341	410	492	590
REPAIRS AND MAINTENANCE	53	63	76	91	109	131	157	188	226	271	326
OPERATING SUPPLIES	22	27	32	39	46	56	67	80	96	115	138
GENERAL AND ADMINISTRATIVE, MISC.	5	6	7	9	10	12	15	18	21	26	31
INSURANCE	10	12	14	17	21	25	30	36	43	52	62
PROPERTY TAXES	10	10	10	10	10	10	10	10	10	10	10
FINANCIAL ASSUMPTIONS											
GENERAL INFLATION RATE	20.0%	20.0%	20.0%	20.0%	20.0%	20.0%	20.0%	20.0%	20.0%	20.0%	20.0%
DOMESTIC ENERGY INFLATION RATE	20.0%	20.0%	20.0%	20.0%	20.0%	20.0%	20.0%	20.0%	20.0%	20.0%	20.0%
LEMPIRA TO $ CONVERSION RATE	6.41	7.05	7.76	8.54	9.39	10.33	11.36	12.50	13.75	15.12	16.63

PROJECT CAPITAL COSTS AND FINANCING, Page 4

CAPITAL COST REQUIREMENTS	m$s	mLemps
Equipment, Spares, Duties	342	199
Civil, Buildings, Structures	0	490
Erection and Construction	13	344
Engineering and Supervision	14	952
Start-Up, Contingency	13	104
Construction Interest and Fees	16	172
TOTAL CAPITAL, EACH CURRENCY	398	2,260
TOTAL CAPITAL, BOTH CURRENCIES	786	4,582

(1 $: 5.83 Lps. (1992))

CONSTRUCTION FINANCING PARAMETERS	
Construction Interest Rate	12.00%
Funds Commitment Fee	1.0%
Construction/Startup (Quarters)	4.0
Project Funding Date	Jan-92
Project Startup Date	Jan-93

DEBT SCHEDULES	BASIS	RATE	TERM	1993	1994	1995	1996	1997	1998	1999	2000	2001	2002	2003
$ Debt	0	6.5%	5	0	0	0	0	0	0	0	0	0	0	0
Lemp. Debt	0	23.0%	5	0	0	0	0	0	0	0	0	0	0	0
Total Debt in mLempira				0	0	0	0	0	0	0	0	0	0	0

EQUITY SCHEDULES

			1993	1994	1995	1996	1997	1998	1999	2000	2001	2002	2003
Cash Available for Distribution, mLemp			576	646	729	828	946	1,086	1,254	1,455	1,694	1,980	2,322
	percent	equity											
Honduran Distributions, mLempir.	50.0%	2,260	288	323	364	414	473	543	627	727	847	990	1,161
Intl. Distributions, m$	50.0%	398	45	46	47	48	50	53	55	58	62	65	70
COVERAGE RATIO FOR AVE CALCULATION			#N/A	#N/A	#N/A	#N/A	#N/A	#N/A	#N/A	#N/A	#N/A	#N/A	#N/A
COVERAGE RATIO FOR MIN CALCULATION			#N/A	#N/A	#N/A	#N/A	#N/A	#N/A	#N/A	#N/A	#N/A	#N/A	#N/A

Summer Months, Year 1: 6
Winter Months, Year 1: 6

PERFORMANCE SUMMARY, Page 5

MONTHLY HOURS	JAN	FEB	MAR	APR	MAY	JUN	JUL	AUG	SEP	OCT	NOV	DEC	TOTAL
Scheduled Outage	24	0	0	0	0	0	0	0	0	0	0	312	336
Operating Total	720	672	744	720	744	720	744	744	720	744	720	432	8,424
Sawmill Operating Hours	203	205	233	181	234	234	192	202	176	184	195	161	2,400
GROSS ELECTRICAL OUTPUT (kW)													
Peak, Sawmill Operating	257	256	255	257	257	256	256	257	256	255	143	256	
Peak, no Sawmill	257	256	255	257	257	256	256	257	256	255	143	256	
Off Peak, no Sawmill	101	55	248	59	138	180	110	194	106	32	0	1	
SAWMILL, KILN AND STATION LOAD (kW)													
Peak, Sawmill Operating	189	177	190	173	164	152	146	142	119	116	96	110	
Peak, no Sawmill	52	52	52	52	52	52	52	52	52	52	47	52	
Off Peak, no Sawmill	46	44	52	44	47	49	46	50	46	42	40	41	
ELECTRICAL OFFSITE SALES (kW)													
Peak, Sawmill Operating	68	79	65	84	93	104	110	114	138	139	47	146	
Peak, no Sawmill	205	204	203	205	205	203	204	204	204	203	96	204	
Off Peak, no Sawmill	55	12	196	15	91	131	64	144	60	0	0	0	
FUEL CONSUMPTION (BDT/hr) @	9950 Btu/lb		0.03 BDT/hr kiln loa			351 lb/hr steam to kiln							
Peak, Sawmill Operating	0.65	0.65	0.65	0.65	0.65	0.65	0.65	0.65	0.65	0.65	0.40	0.65	
Peak, no Sawmill	0.65	0.65	0.65	0.65	0.65	0.65	0.65	0.65	0.65	0.65	0.40	0.65	
Off Peak, no Sawmill	0.31	0.23	0.63	0.24	0.39	0.48	0.33	0.51	0.32	0.18	0.03	0.13	

KILN-RELATED REVENUES, Page 6

Teupasenti Sawmill Data

Freight Loads that Can be Carried on a 40 Foot Flat-Bed Truck

1. Dressed (surfaced) lumber

green	18,000	bf/load		
dried	22,000	bf/load	22.2%	more per load

2. Rough (unsurfaced) lumber

green	10,000	bf/load		
dried	12,000	bf/load	20.0%	more per load

Total Product Production from Sawmill: 2,987 mbf/yr (1990)

Product Category	1990 (%)	1990 mbf/y	with kiln (%)	with kiln mbf/y	Value (Lps/bf	Freight (Lps/bf	net prod value (mLps/y) 1990	net prod value (mLps/y) kiln
#1-Grade for factory, green	7.2%	216	0.0%	0	1.590	0.095	323	0
#1-Grade for factory, dry	0.0%	0	7.2%	216	1.840	0.076	0	381
#1-Grade for export, green	7.2%	216	0.0%	0	1.590	0.160	309	0
#1-Grade for export, dry	0.0%	0	7.8%	232	1.840	0.128	0	397
Panneling, Flooring, green	80.5%	2,405	75.2%	2,245	1.255	0.103	2,771	2,586
Panneling, Flooring, dry	0.0%	0	4.8%	144	1.255	0.080	0	170
#2-Grade Lumber, rough green	5.0%	149	5.0%	149	1.190	0.185	150	150
#2-Grade Lumber, rough dry	0.0%	0	0.0%	0	1.190	0.148	0	0
Mill Total							3,553	3,684
Total Benefit Due to Dry Kiln, mLps/y, 1991 Lps								131

13

APPENDIX C6:
Detailed Economic Simulation
Option VI
Baseload System With Double Track Kiln

03-Aug-92 TEUPASENTI SAWMILL WOOD ENERGY PROJECT

Option VI: Base-Load System with Double Track Kiln

PROFORMA STATEMENT OF INCOME AND CAPITAL, Page 1

(first operating year begins on January 1)

	1993	1994	1995	1996	1997	1998	1999	2000	2001	2002	2003
REVENUES/SAVINGS (000 Lps.)											
ELECTRICAL ENERGY SALES	269	283	300	319	341	367	397	432	474	523	580
AVOIDED DIESEL GENERATION COSTS	0	0	0	0	0	0	0	0	0	0	0
AVOIDED PURCHASE OF ENEE POWER	128	154	185	222	266	319	383	460	552	662	794
KILN-RELATED REVENUES	455	546	655	786	944	1,132	1,359	1,631	1,957	2,348	2,818
***** TOTAL REVENUES	853	983	1,140	1,327	1,550	1,818	2,139	2,523	2,982	3,533	4,192
EXPENSES (000 Lps.)											
PURCHASED BIOMASS FUEL	0	0	0	0	0	0	0	0	0	0	0
OPERATING LABOR	99	118	142	170	204	245	294	353	424	509	610
REPAIRS AND MAINTENANCE	55	66	80	95	114	137	165	198	237	285	342
ASH, WASTE DISPOSAL	25	30	36	43	52	62	75	89	107	129	155
PROPERTY TAXES & INSURANCE	20	22	24	27	31	35	40	46	53	62	72
GENERAL AND ADMINISTRATIVE	5	6	7	9	10	12	15	18	21	26	31
***** TOTAL EXPENSES BEFORE DEBT PAYMENT	204	243	289	345	412	492	589	704	843	1,010	1,210
***** NET PRE-DEBT OPERATING BENEFIT (000 Lps)	649	741	851	982	1,139	1,326	1,550	1,818	2,139	2,523	2,982
PROJECT DEBT PAYMENTS (000 Lps.)	0	0	0	0	0	0	0	0	0	0	0
***** NET CASH AVAILABLE (000 Lps.)	649	741	851	982	1,139	1,326	1,550	1,818	2,139	2,523	2,982
***** DEBT COVERAGE RATIO	#N/A	#N/A	#N/A	#N/A	#N/A	#N/A	#N/A	#N/A	#N/A	#N/A	#N/A

OVERALL PROJECT SUMMARY, Page 2

SYSTEM COSTS AND VALUE, LOCAL CURRENCY

Installed Facilities Cost	4,385	mLps.
Total Capital Cost	4,847	mLps.
Initial Fuel Cost	0.000	Lps/kWh
Initial O&M Cost	0.182	Lps/kWh
Project NPV (pre-debt, 30% DR)	3,271	mLps.

SYSTEM COSTS AND VALUE EXPRESSED IN DOLLARS

Installed Facilities Cost	752	m$s
Total Capital Cost	831	m$s
Initial Fuel Cost	0.000	$/kWh
Initial O&M Cost	0.028	$/kWh
Project NPV (pre-debt, 30% DR)	561	m$s

COGENERATION SYSTEM OPERATING PARAMETERS

Ave. Fuel Use	9.15	mmBtu/hr
Ave. Capacity, Gross	149	kW
Average Site Load	74	kW
Average Offsite Sales	74	kW
Peak Offsite Sales	385	kWh/yr
Heat Rate, ave.	60,734	Btu/kWh
Heat Rate, peak, sawmill	58,703	Btu/kWh
Heat Rate, peak, no saw	58,703	Btu/kWh
Heat Rate, off-peak	93,297	Btu/kWh
Operating Hours-yr 1	8,424	
Operating Hours-yr 2	8,424	

INVESTMENT PERFORMANCE

Investment Payback	5.4	yrs
Pre-Tax IRR (%)	20.7%	
Ave Debt Coverage Ratio	#N/A	
Kiln Steam Use	1,252	lb/hr

DATA BY TIME-OF-USE PERIOD	Ann. Hours	Avail	Hrs Yr 1	Hrs Yr 2	kW Sales	Fuel BDT/hr	Revenue Lempira/kWh
Peak, Sawmill Operating	2,400	100.0%	2,400	2,400	61	0.62	0.30
Peak, no Sawmill	1,662	92.9%	1,544	1,544	155	0.62	0.30
Off Peak, no Sawmill	4,698	95.4%	4,480	4,480	36	0.32	0.23

PROJECT REVENUES, Page 3

PROJECT REVENUES/SAVINGS (mLempira/yr)	1993	1994	1995	1996	1997	1998	1999	2000	2001	2002	2003
ANNUAL SYSTEM CAPACITY FACTOR	96.2%	96.2%	96.2%	96.2%	96.2%	96.2%	96.2%	96.2%	96.2%	96.2%	96.2%
TOTAL ELECTRIC ENERGY OUTPUT (mkWh/YR)	1,118	1,118	1,118	1,118	1,118	1,118	1,118	1,118	1,118	1,118	1,118
PEAK CAPACITY CONTRIBUTION TO ENEE (kW)	203	203	203	203	203	203	203	203	203	203	203
PEAK ELECTRIC SALES PRICE (Lempira/kWh)	0.30	0.36	0.43	0.52	0.62	0.74	0.89	1.07	1.28	1.54	1.85
PEAK CAPACITY SALES PRICE (Lps/kW-y)	847	847	847	847	847	847	847	847	847	847	847
OFF-PEAK ELECTRIC SALES PRICE (Lempira/kWh)	0.23	0.25	0.27	0.30	0.33	0.36	0.40	0.44	0.48	0.53	0.58
AVOIDED DIESEL FUEL USE (gal/yr)	0	0	0	0	0	0	0	0	0	0	0
DIESEL FUEL PRICE (Lempira/gal)	9.99	11.99	14.39	17.27	20.72	24.87	29.84	35.81	42.97	51.56	61.88
ANNUAL DIESEL O&M AND DEPRECIATION	0	0	0	0	0	0	0	0	0	0	0
AVOIDED PURCHASE OF ENEE POWER (mLps/yr)	128	154	185	222	266	319	383	460	552	662	794
KILN-RELATED ENHANCED REVENUES (mLps/yr)	455	546	655	786	944	1,132	1,359	1,631	1,957	2,348	2,818
PROJECT OPERATING EXPENSES (mLempira/yr)											
FUELWOOD CONSUMPTION (1000 ton/Yr)	3.87	3.87	3.87	3.87	3.87	3.87	3.87	3.87	3.87	3.87	3.87
FUELWOOD COST (Lempira/ton)	0.00	0.00	0.00	0.00	0.00	0.00	0.00	0.00	0.00	0.00	0.00
FUELWOOD COST ESCALATION RATE	20.0%	20.0%	20.0%	20.0%	20.0%	20.0%	20.0%	20.0%	20.0%	20.0%	20.0%
OPERATING LABOR	99	118	142	170	204	245	294	353	424	509	610
REPAIRS AND MAINTENANCE	55	66	80	95	114	137	165	198	237	285	342
OPERATING SUPPLIES	25	30	36	43	52	62	75	89	107	129	155
GENERAL AND ADMINISTRATIVE, MISC.	5	6	7	9	10	12	15	18	21	26	31
INSURANCE	10	12	14	17	21	25	30	36	43	52	62
PROPERTY TAXES	10	10	10	10	10	10	10	10	10	10	10
FINANCIAL ASSUMPTIONS											
GENERAL INFLATION RATE	20.0%	20.0%	20.0%	20.0%	20.0%	20.0%	20.0%	20.0%	20.0%	20.0%	20.0%
DOMESTIC ENERGY INFLATION RATE	20.0%	20.0%	20.0%	20.0%	20.0%	20.0%	20.0%	20.0%	20.0%	20.0%	20.0%
LEMPIRA TO $ CONVERSION RATE	6.41	7.05	7.76	8.54	9.39	10.33	11.36	12.50	13.75	15.12	16.63

PROJECT CAPITAL COSTS AND FINANCING, Page 4

CAPITAL COST REQUIREMENTS	m$s	mLemps
Equipment, Spares, Duties	356	203
Civil, Buildings, Structures	0	589
Erection and Construction	13	354
Engineering and Supervision	14	1,009
Start-Up, Contingency	13	104
Construction Interest and Fees	16	186
TOTAL CAPITAL, EACH CURRENCY	412	2,445
TOTAL CAPITAL, BOTH CURRENCIES	831	4,847

(1 $: 5.83 Lps. (1992))

CONSTRUCTION FINANCING PARAMETERS	
Construction Interest Rate	12.00%
Funds Commitment Fee	1.0%
Construction/Startup (Quarters)	4.0
Project Funding Date	Jan-92
Project Startup Date	Jan-93

DEBT SCHEDULES	BASIS	RATE	TERM	1993	1994	1995	1996	1997	1998	1999	2000	2001	2002	2003
$ Debt	0	6.5%	5	0	0	0	0	0	0	0	0	0	0	0
Lemp. Debt	0	23.0%	5	0	0	0	0	0	0	0	0	0	0	0
Total Debt in mLempira				0	0	0	0	0	0	0	0	0	0	0

EQUITY SCHEDULES			1993	1994	1995	1996	1997	1998	1999	2000	2001	2002	2003
Cash Available for Distribution, mLemp			649	741	851	982	1,139	1,326	1,550	1,818	2,139	2,523	2,982
	percent	equity											
Honduran Distributions, mLempir.	50.0%	2,445	324	370	425	491	569	663	775	909	1,070	1,261	1,491
Intl. Distributions, m$	50.0%	412	51	53	55	58	61	64	68	73	78	83	90
COVERAGE RATIO FOR AVE CALCULATION			#N/A	#N/A	#N/A	#N/A	#N/A	#N/A	#N/A	#N/A	#N/A	#N/A	#N/A
COVERAGE RATIO FOR MIN CALCULATION			#N/A	#N/A	#N/A	#N/A	#N/A	#N/A	#N/A	#N/A	#N/A	#N/A	#N/A

Summer Months, Year 1:
Winter Months, Year 1:

PERFORMANCE SUMMARY, Page 5

MONTHLY HOURS	JAN	FEB	MAR	APR	MAY	JUN	JUL	AUG	SEP	OCT	NOV	DEC	TOTAL
Scheduled Outage	24	0	0	0	0	0	0	0	0	0	0	312	336
Operating Total	720	672	744	720	744	720	744	744	720	744	720	432	8,424
Sawmill Operating Hours	203	205	233	181	234	234	192	202	176	184	195	161	2,400
GROSS ELECTRICAL OUTPUT (kW)													
Peak, Sawmill Operating	222	221	220	221	222	221	220	220	222	220	61	216	
Peak, no Sawmill	222	221	220	221	222	221	220	220	222	220	61	216	
Off Peak, no Sawmill	58	15	206	17	95	136	69	146	63	1	0	0	
SAWMILL, KILN AND STATION LOAD (kW)													
Peak, Sawmill Operating	189	177	190	173	164	152	146	142	119	116	94	110	
Peak, no Sawmill	52	52	52	52	52	52	52	52	52	52	45	52	
Off Peak, no Sawmill	46	44	52	44	47	49	46	50	46	43	42	42	
ELECTRICAL OFFSITE SALES (kW)													
Peak, Sawmill Operating	33	44	30	48	57	69	74	78	104	104	0	106	
Peak, no Sawmill	170	169	168	168	170	169	168	168	170	168	16	164	
Off Peak, no Sawmill	13	0	154	0	48	87	22	97	17	0	0	0	
FUEL CONSUMPTION (BDT/hr)	9950 Btu/lb		0.12 BDT/hr kiln load				1,252 lb/hr steam to kiln						
Peak, Sawmill Operating	0.65	0.65	0.65	0.65	0.65	0.65	0.65	0.65	0.65	0.65	0.30	0.65	
Peak, no Sawmill	0.65	0.65	0.65	0.65	0.65	0.65	0.65	0.65	0.65	0.65	0.30	0.65	
Off Peak, no Sawmill	0.31	0.23	0.63	0.24	0.39	0.48	0.33	0.51	0.32	0.18	0.12	0.12	

119

KILN-RELATED REVENUES, Page 6

Teupasenti Sawmill Data

Freight Loads that Can be Carried on a 40 Foot Flat-Bed Truck

1. Dressed (surfaced) lumber

green	18,000	bf/load	
dried	22,000	bf/load	22.2% more per load

2. Rough (unsurfaced) lumber

green	10,000	bf/load	
dried	12,000	bf/load	20.0% more per load

Total Product Production from Sawmill: 2,987 mbf/yr (1990)

Product Category	(%)	1990 mbf/y	(%)	with kiln mbf/y	Value (Lps/bf	Freight (Lps/bf	net prod value (mLps/y) 1990	kiln
#1-Grade for factory, green	7.2%	216	0.0%	0	1.590	0.095	323	0
#1-Grade for factory, dry	0.0%	0	7.2%	216	1.840	0.076	0	381
#1-Grade for export, green	7.2%	216	0.0%	0	1.590	0.160	309	0
#1-Grade for export, dry	0.0%	0	15.7%	470	1.840	0.128	0	805
Panneling, Flooring, green	80.5%	2,405	0.0%	0	1.255	0.103	2,771	0
Panneling, Flooring, dry	0.0%	0	72.0%	2,151	1.255	0.080	0	2,528
#2-Grade Lumber, rough green	5.0%	149	0.0%	0	1.190	0.185	150	0
#2-Grade Lumber, rough dry	0.0%	0	5.0%	149	1.190	0.148	0	156
Mill Total							3,553	3,869
Total Benefit Due to Dry Kiln, mLps/y, 1991 Lps								316

The Office of Energy and Infrastructure

The Agency for International Development's Office of Energy and Infrastructure plays an increasingly important role in providing innovative approaches to solving the continuing energy crisis in developing countries. Three problems drive the Office's assistance programs: high rates of energy use and economic growth accompanied by a lack of energy, especially power in rural areas; severe financial problems, including a lack of investment capital, especially in the electricity sector; and growing energy-related environmental threats, including global climate change, acid rain and urban pollution.

To address these problems, the Office of Energy and Infrastructure leverages financial resources of multilateral development banks such as The World Bank and the InterAmerican Development Bank, the private sector and bilateral donors to increase energy efficiency and expand energy supplies, enhance the role of private power, and implement novel approaches through research, adaption and innovation. These approaches include improving power sector investment planning ("least-cost " planning) and encouraging the application of cleaner technologies that use both conventional fossil fuels and renewable energy sources. Promotion of greater private sector participation in the power sector and a wide-ranging training program also help to build the institutional infrastructure necessary to sustain cost-effective, reliable and environmentally sound energy systems integral to broad-based economic growth.

Much of the Office's strategic focus has anticipated and supports recently enacted congressional legislation directing the Office and A.I.D. to undertake a "Global Warming Initiative" to mitigate the increasing contribution of key developing countries to greenhouse gas emissions. This strategy includes expanding least-cost planning activities to incorporate additional countries and environmental concerns, increasing support for feasibility studies in renewable and cleaner fossil energy technologies that focus on site-specific commercial applications, launching a multilateral global energy efficiency initiative and improving the training of host country nationals and overseas A.I.D. staff in areas of energy that can help reduce expected global warming and other environmental problems.

The Office also helps developing countries speed their economic development through promoting technology cooperation between U.S. suppliers and developing country companies, institutions and governments. This effort involves Business Opportunity Identification to define and analyze the range of commercially viable trade and investment opportunities, technologies and services that have a positive impact on the environment and are appropriate for developing countries; Venture Promotion to encourage the involvement of the U.S. private sector; Innovative Finance; and Policy Development assistance to developing counties as they pursue policy and regulatory changes to provide market incentives for environmentally beneficial technologies.

To pursue these activities, the Office of Energy and Infrastructure implements the following six projects: (1) Biomass Energy Systems and Technology Project (BEST); (2) The Renewable Energy Applications and Training Project (REAT); (3) The Private Sector Energy Development Project (PSED); (4) The Energy Training Project (ETP); (5) The Energy Technology Innovation Project (ETIP); and (6) The Energy Efficiency Project (EEP).

The Office of Energy and Infrastructure helps set energy policy direction for the Agency, making its projects available to meet generic needs (such as training), and responding to short-term needs of A.I.D.'s field offices in assisted countries.

Further information regarding the Office of Energy and Infrastructure projects and activities is available in our Program Plan, which can be requested by contacting:

Office of Energy and Infrastructure
Bureau for Research and Development
U.S. Agency for International Development
Room 508, SA-18
Washington, D.C. 20523-1810
Tel: (703) 875-4052