PN-ABN-556

A Report of the

Office of Energy

Bureau for Science and Technology
United States Agency for International Development

PN-ABN-556

Report 92-02

A Report of the

Office of Energy and Infrastructure
Bureau for Research and Development
United States Agency for International Development

DIVERSIFICATION OF THE SUGAR AND PALM OIL INDUSTRIES: INDONESIA

Part II: Case Studies of Sugar Industry Electricity Production for Export

Prepared by:

Winrock International
Institute For Agricultural Development
1611 North Kent Street
Arlington, VA 22209 USA

in cooperation with
KPB Perkebunan
Jl. Tamen Cut Mutiah
Jakarta, Indonesia

Biomass Energy Systems and Technology Project, 936-5737
DHR-5737-A-00-9058-00

December 1991

TABLE OF CONTENTS

	Page
Acknowledgements	vi
Glossary of Acronyms	vii
Map of Indonesia	viii
1.0 Executive Summary	1
1.1 Background to Study	1
1.2 Cogeneration Alternatives and Costs	2
1.3 Financial and Economic Results	2
1.4 Recommendations	6
2.0 Introduction	7
2.1 Purpose and Conduct of the Study	7
2.2 Growth and Evolution in Sugar Industry	9
2.3 Alternative uses of Bagasse and Cane Trash	10
2.3.1 Pulp and Paper	10
2.3.2 Cane Tops and Leaves	10
2.4 Private Power in Indonesia	11
2.4.1 Private Power Procedures	11
2.4.2 Sugar Industry Private Power	12
3.0 Parameters of Sugar Industry Electric Power in Indonesia	13
3.1 General Description of Indonesian Sugar Factories	13
3.1.1 Bagasse Production and Consumption	13
3.1.2 Electrical Connections to PLN	14
3.1.3 Steam and Power Production and Consumption	14
3.1.4 Cane	15
3.2 Requirements for Cogeneration	15
3.2.1 Electrical Interconnections to PLN	15
3.2.2 Steam Generation	15
3.2.3 Factory Steam Usage	16
3.2.4 Turbogenerators	16
3.2.5 Other Requirements	16

3.3 Local Manufacturing and Erection Capabilities 16

4.0 Factory Case Studies 20

4.1 Methodology 20
4.1.1 Energy Balances Without Cogeneration 20
4.1.2 Bagasse Energy Export Power Calculations with Cogeneration 20
4.1.3 New Mills 21
4.1.4 New Equipment for Cogeneration 21
4.1.5 Capital Costs 21

4.2 Trangkil (Nominal 3,000 TCD) 22

4.3 Sragi (Nominal 4,000 TCD) 22
4.3.1 Existing Factory 22
4.3.2 Equipment for Cogeneration 23
4.3.3 Energy Output 23
4.3.4 Capital Costs 25

4.4 Gempolkrep (Nominal 7,500 TCD) 25
4.4.1 Existing Factory 25
4.4.2 Equipment for Cogeneration 26
4.4.3 Energy Output 26
4.4.4 Capital Costs 27

4.5 Gunung Madu (Nominal 10,000 TCD) 27
4.5.1 Existing Factory 27
4.5.2 Equipment for Cogeneration 28
4.5.3 Energy Output 28
4.5.4 Capital Costs 29

4.6 New Factory 30
4.6.1 Standard Factory 30
4.6.2 Equipment for Cogeneration 30
4.6.3 Energy Output 30
4.6.4 Capital Costs 31

4.7 Summary of Costs 31

5.0 Economic and Financial Case Studies 32

5.1 Financial versus Economic Analysis for Indonesia 32

5.2 Opportunity Cost of Bagasse in Electric Power 33

5.3 Cogeneration Investment Alternatives 33
5.3.1 Assumptions 33

5.4 Power Generation Costs, Plant Efficiency, and Investment Costs 35

5.5 Fuel Price Issues 38
5.5.1 Fuel Netback Value 39

5.6 Financial Analysis 40
5.6.1 Results 40
5.6.2 Sensitivity Analysis 42

6.0 Conclusions and Recommendations 46

6.1 Technical/Economic Summary 46

6.2 The Policy Environment 48

6.3 Recommendations 49

Appendices

Appendix A List of Sugar Factories, 1991; Factories with Expansion Plans; Plans for New Factories

Appendix B Cogeneration and the Sugar Factory

Appendix C Factory Processing Data

Appendix D Factory Steam Flow Schematics

Appendix E Fuel Netback Value Methodology

Appendix F Financial Analysis Tables

Appendix G Summary of Seminar on Potential for Electric Power Development in the Sugar Industry

List of Tables and Figures

Table 1 Comparative Power Investment Costs and Bagasse Power Production: Indonesia Case Studies 3
Table 2.1 Part 1 Study Recommendations 7
Table 3.1 Critical Sugar Industry Parameters 13
Figure 1 Typical Interconnection for Export from Sugar Factories with Dedicated 22 KV or 33 KV Line 17

Figure 2	Typical Interconnection for Export from Sugar Factories with Dedicated 115 KV or 138 KV Line	18
Table 4.1	Cogeneration Data - Sragi	24
Table 4.2	Capital Costs - Sragi Cogeneration	24
Table 4.3	Cogeneration Data - Gempolkrep	26
Table 4.4	Capital Costs - Gempolkrep Cogeneration	27
Table 4.5	Cogeneration Data - Gunung Madu	29
Table 4.6	Capital Costs - Gunung Madu Cogeneration	29
Table 4.7	Cogeneration Data - New Factory	30
Table 4.8	Capital Costs - New Factory Cogeneration	31
Table 5.1	Summary of Installed Costs of Various Options	35
Table 5.2	Power Generation Costs at Sragi: Composition & Sensitivities	37
Table 5.3	Key Sensitivities for Indonesian Cogeneration Investments: Impacts on Generation Costs	38
Table 5.4	Fuel Netback Values for Proposed Cogeneration Plants	40
Table 5.5	Financial Analysis Summary for Indonesia Cogeneration Investments	41
Table 5.6	Economic Analysis Summary for Indonesia Cogeneration Investments	42
Table 5.7	Sensitivity Analysis of the Sragi Investment	43
Table 5.8	Sensitivity Analysis of the Gempolkrep Investment	44
Table 5.9	Sensitivity Analysis of the Gunung Madu Investment	44
Table 5.10	Sensitivity Analysis of the New Mill Investment	45
Table 6.1	Comparison of Bagasse Power Results: Indonesia Case Studies	47

ACKNOWLEDGEMENTS

This report was prepared by a team of specialists from Winrock International under the Biomass Energy Systems and Technology (BEST) Project of the U.S. Agency for International Development. The study director was Henry Steingass and the team included Consultants Donald Hertzmark, Theodore Vorfeld, Geoffrey Swenson, and Allison Keeler.

The USAID/Winrock (BEST) team would like to express its gratitude to all those who provided information, time, and contributions to this study. In particular, the team wishes to thank the Joint Marketing Office of KPB Perkebunan, (Mr. Samingoen, Director), which provided crucial guidance and logistical support in the conduct of the team's work.

In addition, the team would like to thank Messrs. Soetojo, Dewan Gula, and A. Taufik, KPB Perkebunan, without whose contributions the study would not have been possible. Office support provided by Christina Amos was critical in completing the study.

Lastly, the team wishes to thank the USAID Mission in Jakarta, especially Marcus Winter and Edi Setianto in the Agriculture and Rural Development Office, for their crucial advice and assistance in conducting the study.

GLOSSARY OF ACRONYMS

ABC	Annualized Benefit Cost (%)
ADO	Automotive Diesel Oil
AFC	Average Fuel Cost
BOE	Barrel of Oil Equivalent
BOO	Build-Own-Operate
BTU	British Thermal Unit
BULOG	Indonesia State Commodity Trading Agency
FOB	Freight on Board
GW and GWH	Gigawatts and Gigawatt-hours (10^9 Watts)
HFO	Heavy Fuel Oil (#6 Oil)
HP	High Pressure (Boilers or Steam Generators)
kV	Kilovolts
kW and KWh	Kilowatts and Kilowatt-hours (10^3 Watts)
LNG	Liquefied Natural Gas
M	Million (10^6)
MDO	Medium Distillate Oil
MP	Medium Pressure (Boilers or Steam Generators)
MW and MWh	Megawatts and Megawatt-hours (10^6 Watts)
NB	Fuel Netback Values (for economic and financial analyses)
PLN	National Electricity Agency
Psig	Pounds per Square Inch at Gravity (1 kg/cm^2 = 14.7 psig)
PTP	National Estate Company, prefix for Perkebunan operating companies
Rp	Rupiahs (Indonesia Currency Unit) 1$US = Rp 1965
T	Metric Tons or tonnes
TCD	Metric Tons of Cane per day, sugar factory processing capacity
TG	Turbo-Generator
USAID	U.S. Agency for International Development
[illegible]	United States Dollars

INDONESIA

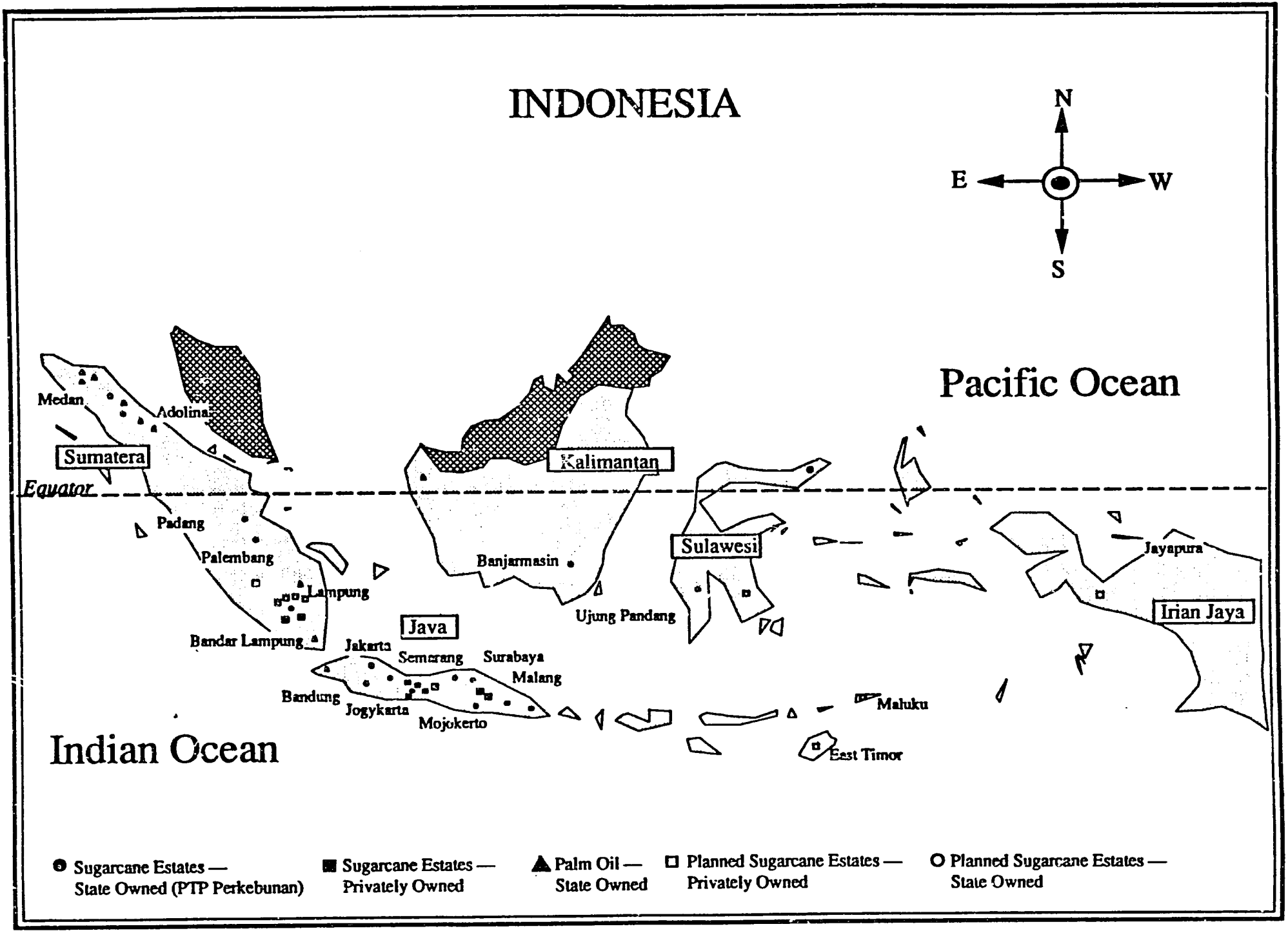
N
E
W
S
Pacific Ocean
Indian Ocean
Equator
Sumatera
Medan
Adolina
Padang
Palembang
Lampung
Bandar Lampung
Kalimantan
Banjarmasin
Ujung Pandang
Sulawesi
Java
Jakarta
Semerang
Surabaya
Malang
Bandung
Jogykarta
Mojokerto
Maluku
East Timor
Irian Jaya
Jayapura
Sugarcane Estates — State Owned (PTP Perkebunan)
Sugarcane Estates — Privately Owned
Palm Oil — State Owned
Planned Sugarcane Estates — Privately Owned
Planned Sugarcane Estates — State Owned

DIVERSIFICATION OF THE SUGAR AND PALM OIL INDUSTRIES: INDONESIA

Part II: Case Studies of Sugar Industry Electricity Production for Export

Chapter 1

EXECUTIVE SUMMARY

1.1 Background to Study

In the initial report on sugar and palm oil investments in Indonesia, the study team of technical specialists from the U.S. and Indonesia found that there were a number of attractive investments for sugar mills.[1] One type of investment emerged as the most promising under present conditions in Indonesia: new high efficiency steam generators and turbogenerators at sugar factories which are expanding or being newly constructed. Other investments also appeared promising: small power development based on palm oil wastes; new paper production facilities based on sugar industry bagasse; animal feeds from both green sugarcane field residues and palm fruit wastes. These options, however, did not share the practical technical potential nor the economic scale of electricity production by the sugar industry.

A variety of hypothetical power investments in the sugar industry were analyzed in that study, covering small, medium and larger-scale approaches to power production and improved efficiency in sugar factories. Rates of return were attractive for these scenarios, and it was concluded that detailed case studies would be needed to determine the true viability of sugar industry power plants. Given the tremendous need for new electricity supplies in Indonesia, and given USAID's role in providing assistance for private power development, A.I.D.'s Office of Energy and Infrastructure launched this Part 2 study as a follow-up to the previous industry survey work.

The primary objectives of this study are to examine optimum energy production strategies in sugar factory cases which are representative of the industry, and to gain a detailed understanding of the technical, financial and economic prospects for specific investments in energy production. In this the study also seeks to examine the requirements for power sales outside the sugar company as well as the market for doing so.

1 "Diversification of Sugar and Palm Oil Industries: Indonesia; Part 1: Survey of Energy and Product Investment Options;" A.I.D. Office of Energy Report 91-07, Biomass Energy Systems & Technology (BEST) Project, Washington, DC, in cooperation with KPB Perkebunan, Jakarta, Indonesia, March 1991.

1.2 Cogeneration Alternatives and Costs

The team decided to focus on the larger-scale systems and investments required to optimize power production in the sugar factory. The principal reasons are that Indonesia is undergoing a major expansion of its sugar industry with new factories, as well as partially consolidating into larger existing factories. These trends create the opportunity for systems in the 12-to-40 MW range. Such projects will be attractive under Indonesia's emerging investment environment for privately developed and owned electric power plants. Further, these relatively larger projects will entail similar engineering and management costs as smaller power and efficiency projects.

The team, assisted by counterpart specialists from Perkebunan, the Indonesian Sugar Council (Dewan Gula), and private sugar companies, selected four sugar companies considered to be promising candidates for electric power investments. The factors considered in selecting the cases included production capacity, location, type of ownership (state or private), future plans, and a variety of other variables. The potential for design of new sugar factories which might optimize power production was treated as one of the cases because of the large benefits expected from plants purposefully designed to produce both sugar and power efficiently. The team obtained information on plans for several new large-scale sugar estates and factories in Southern Sumatera. The cases are as follows:

Sragi	3000 TCD*	PTP XV-XVI	Pekalongan, Central Java
Gempolkrep	7500 TCD	PTP XXI-XXII	Mojokerto, Eastern Java
Gunung Madu	10,000 TCD	private	Lampung province, S. Sumatera
New Mill	10,000 TCD	private	Lampung province, S. Sumatera

* Metric tonnes of cane per day

Cogeneration alternatives were considered for each case taking into account cane/bagasse supplies, season, factory configuration, grid connection and other key parameters. Equipment requirements and costs were determined for each case, using only proven technology. The expected heat rates of the proposed units range from 13,000-15,000 BTU/kWh, compared to 40,000-60,000 BTU/kWh in existing configurations. Power demands and production were examined for each mill under the proposed new configuration. From the study it became clear that power investments were not only technically practical, but that they also compared favorably with other investments in electricity production. Table 1 below summarizes the key investment cost and power information from the study and shows the comparison of the four cases.

1.3 Financial and Economic Results

The recommended cogeneration schemes are analyzed in detail for their economic and financial viability using a financial model for sugar industry power developed by Winrock. The power output cost of each alternative is compared to a range of possible power purchase prices as well as to the estimated economic avoided cost of PLN electricity in various parts of the country. The avoided cost is the correct measure of the value of electricity produced through cogeneration because electricity supply is in serious deficit in Indonesia and shortfalls are expected throughout the decade.

TABLE 1
COMPARATIVE POWER INVESTMENT COSTS AND BAGASSE POWER PRODUCTION: INDONESIA CASE STUDIES

Factory:	Sragi	Gempolkrep	Gunung Madu	New Factory
Capital Investment ('000 $US)	22,971	24,019	27,231	56,777
New Generation Capacity (kW)	13,990	18,260	24,000	41,280
Cap. Investment per kW of New Capacity ($US/kW)	1,642	1,315	1,135	1,375
Approx Net Export, In-Crop (kW)	11,300	12,100	15,300	32,600
Annual Net Export from Bagasse (MWh)	50,272	47,250	58,572	125,025
Number of Days Off-Season	135	165	163	163

The generation costs for electric power in the proposed cogeneration investments are in the range $0.045-0.060 per kWh for the most likely cases. All cases assume the use of #6 fuel oil during the off-season, a conservative assumption since other, lower cost fuels (e.g., cane field residues, coal) may be available. Nevertheless, these costs compare favorably with costs from new conventional electric power projects in Indonesia, in the range of $0.06-0.08 per kWh.

Both financial and economic analyses are used, the former giving results in terms of revenues and costs to the owner of the plant while economic analysis gives benefits and costs with respect to the opportunity costs of the resources deployed. It is important in this analysis that the economic and financial results differ only in degree but not in kind. A number of measures are used in analyzing these investments; these are:

- Benefit cost ratio;
- Annualized benefit cost ratio (ABC);
- Internal rate of return (IRR);
- Displaced oil value; and
- Fuel netback value.

The fuel netback value (NB) is an important measure which tells sugar mills what its bagasse resource is worth to the power plant when there are alternative uses for the resource, such as for pulp or board manufacture. This measure calculates the *maximum* that a power generator can pay for fuel given the capital cost of the investment, the frequency of its use, the efficiency of the plant

(BTU/kWh), and the price at which the power is purchased (or the avoided cost of supply). In the current analysis, the fuel netback value is important since the study estimates that the mills will use purchased fuel for more than half of its export generation.

Table 5.4 from the financial analyses, reproduced below, shows that there is a great variation in calculated fuel netback values in the four Indonesian sugar cases but only small variation in average fuel costs. The relatively low netback value for Sragi is due to the large investment that is required to rehabilitate the mill in general. High netback figures at Gunung Madu and the new plant are due in part to low operating costs, while the smaller investment required at Gunung Madu contributes to that mill's high netback value figure. The New Mill shows higher average fuel costs than the others due largely to the higher proportion of oil in the mill's generation mix. Any increase in the use of biomass fuels in this generation mix is likely to reduce average fuel costs.

TABLE 5.4
FUEL NETBACK VALUES FOR PROPOSED COGENERATION PLANTS

	Netback Values		Average Fuel Costs	
Mill	$/MBTU	Rp/MBTU	$/MBTU	Rp/MBTU
Sragi	$1.88	3,741	$1.48	2,945
Gempolkrep	$2.36	4,696	$1.47	2,925
Gunung Madu	$3.44	6,846	$1.35	2,687
New Mill	$2.66	5,293	$1.75	3,483

NOTE: Fuel Netback values computed using present value techniques. Average fuel cost figures represent a 42:58 mix of bagasse and #6 oil. The NB represents the price that the resource owner must receive in order to be indifferent between selling electricity and selling the fuel itself for some other use.

As Table 5.5 shows (next page), the financial analysis of the cogeneration investments yields highly positive results. In all of the cases, the various measures of merit are consistent with one another. It is important to note that the large percentage figures in the IRR calculation are belied by the lower values of the annualized benefit-cost, or ABC, measure. IRRs can assume quite high values when compounding positive cash flows since they carry an implicit assumption that the remainder of the positive cash flows can continue to be reinvested at the same rate. As a result, IRR values above 50% are often unreliable. Despite the shortcomings of the IRR measure, the other results confirm that all of the prospective investments are attractive.

As a check on the accuracy of the financial analysis, the team performed a companion economic analysis of the four proposed projects. Table 5.6 below shows the results of the baseline economic analysis of the four projects.

In summary, the financial and economic results, computed using estimated avoided costs of the PLN system rather than power purchase prices, show that the projects may indeed be feasible. For three of the four projects, the IRRs, ABCs, and Benefit-Cost ratios cluster, showing the overall

TABLE 5.5
FINANCIAL ANALYSIS SUMMARY FOR INDONESIA COGENERATION INVESTMENTS

Measure of Merit	Unit	Sragi	Gempolkrep	Gunung Madu	New Mill
Benefit-Cost Ratio		1.34	1.43	1.61	1.40
Annualized Benefit-Cost Ratio	% above discount rate[2]	1.34%	1.64%	1.74%	1.54%
Internal Rate of Return	%	56.23%	69.92%	96.43%	73.18%
Displaced Oil Value	$M	$1.58	$1.78	$2.41	$4.18
Fuel Netback Value	$/MBTU	$1.88	$2.36	$3.44	$2.66
Average Fuel Cost	$/MBTU	$1.48	$1.47	$1.35	$1.75

TABLE 5.6
ECONOMIC ANALYSIS SUMMARY FOR INDONESIA COGENERATION INVESTMENTS

Measure of Merit	Unit	Sragi	Gempolkrep	Gunung Madu	New Mill
Benefit-Cost Ratio		1.48	1.58	1.94	1.55
Annualized Benefit-Cost Ratio	% above discount rate	1.80%	2.09%	3.07%	2.01%
Internal Rate of Return	%	29.08%	33.20%	47.43%	28.41%
Displaced Oil Value	$M	$1.93	$2.21	$2.95	$5.07
Fuel Netback Value	$/MBTU	$2.13	$2.64	$4.29	$3.14

2 A real discount rate of 10% is used in this study. This corresponds with the discount rate typically used by international finance institutes for economic development projects.

similarity of the cost and benefit streams. The value of displaced oil in economic analysis differs from the financial analysis because of pricing distortions, hence the higher numbers in the economic analysis. As in the financial analysis, the Gunung Madu mill appears to show better results than the others, due primarily to the its lower investment costs per kW of installed export capacity and its large off-season capacity. In addition, plants on Sumatera will export to a grid with higher avoided costs than the Java grid, to which Sragi and Gempolkrep would export their power. The Sragi mill's higher fuel netback value makes it more susceptible than the others to changes in power purchase prices or in costs of any sort, especially oil or bagasse. The other plants all have netback values that are high enough to absorb significant variations in the prices received or in costs. It is interesting to note that both of the Sumatera plants have fuel netback values that are high enough to operate year round on #6 oil and remain (barely) profitable.

1.4 Recommendations

This study recommends that a greater level of planning and policy attention should be given to sugar industry electricity development in order to maximize its economic and financial benefits. In the interest of providing technical assistance to industry and government managers, the study concludes in making the following summary recommendations:

Private Power

- Efforts to encourage private investment in the power sector should seek to encourage industrial facilities and cogeneration, such as the sugar industry, on a test basis. Potential impact from this type of facility could then be assessed and used to help promulgate detailed regulations, develop pricing and contract mechanisms, and consider special features such as seasonal and peak/off-peak rates to optimize sugar industry power.

Sugar Industry

- The new power and efficiency industry committee under Dewan Gula should be given resources needed to raise industry profile in policy, energy industry and finance circles. Committee should focus on areas of special need it has identified, especially training and finance;.

- In areas of new estate development, companies should develop joint plans for power supply with electricity users and, if appropriate, PLN or local electrical cooperatives;

- Sugar companies on Java planning power system rehabilitation or expansion of capacity should conduct detailed studies of upgraded systems, and seek to develop interconnect and sale plans with PLN or local power users. Other companies begin the process of determining the costs and returns from new investments in power development.

- The industry should initiate research and development activities on low cost off-season fuels for sugar industry power plants, focusing on cane field residues and other biomass fuel opportunities.

Chapter 2

INTRODUCTION

2.1 Purpose and Conduct of the Study

This study presents case studies of the potential for electric power production at four Indonesian sugar factories. It follows a companion industry survey completed in March 1991, which examined a variety of diversification investment options for both the sugar and palm oil industries.[3] This study's principal conclusions were that a potential in excess of 300 megawatts (MW) of new electric capacity could be added in the sugar industry, and that such development should receive careful attention under Indonesia's new private power policy.

The study also examined electric power potential in the palm oil industry, and surveyed potential investments in animal feed production, paper and fiber products, food products, and industrial chemicals from sugar and palm oil wastes. The study pointed to a number of recommended actions for diversification of Indonesia's palm oil and sugar industries, concentrating on power options. These are listed in the table below.

TABLE 2.1
PART 1 STUDY RECOMMENDATIONS

PALM INDUSTRY

1. Examine the feasibility of using empty fruit bunches (EFBs) for small-scale electrical generation; focus on combustion feasibility, combining wastes from several mills, and development in areas close to villages, industries and transmission lines.
2. Continue pre-investment analysis for furfural from EFBs.
3. Research and develop animal feed production strategies.
4. Investigate the technology and economics of EFB use as potential paper pulping feedstock.

CONT'D

3 "Diversification of Sugar and Palm Oil Industries: Indonesia; Part 1: Survey of Energy and Product Investment Options;" A.I.D. Office of Energy Report 91-07, Biomass Energy Systems & Technology (BEST) Project, Washington, DC, in cooperation with KPB Perkebunan, Jakarta, Indonesia, March 1991.

TABLE 2.1 (CONT'D)
PART 1 STUDY RECOMMENDATIONS

SUGAR INDUSTRY

1. Conduct targeted case studies of the technical, economic and commercial feasibility of designing new mills to high efficiency standards with electricity export; investigate factories planning expansion or replacement of their power facilities.
2. Examine power markets and investment potential for sugar industry power plants, especially in light of new national private power policy.
3. Continue research and market studies for use of bagasse as feedstock for domestic paper and board production.
4. Continue to solicit sound joint venture investments in high value food products (e.g., potable alcohol, MSG) based on molasses.
5. Investigate alternative off-season fuels for off-season power export.

The primary objectives of this study are to examine sugar factory cases which are representative of the industry as a whole, while at the same time to gain a detailed understanding of the technical, financial and economic prospects for specific investments in energy production. Thus, in addition to analysis of specific factory upgrades for efficient cogeneration, the study also examines the requirements for power sales outside the sugar company. The economic and financial analyses address a number of possible scenarios in sale of electricity to public utilities and other customers.

Noting the overall attractiveness of attaining higher efficiencies in power generation, the team decided to focus principally on higher pressure boilers and higher capacity systems. Especially in isolated regions where the sugar industry is expanding and where the cogeneration plant might be required as a baseload unit, this approach appears to be more viable than gradual improvements in power production. In particular, the capability of using fuel oil efficiently in the off-season is now seen as a requirement in most cases, not an option, in order to obtain firm power contract prices. In some cases other fuels, such as coal or even collected and stored cane field residues, might play a role in off-season fueling, especially where their delivered costs on an energy basis may be lower than fuel oil.

A team of four specialists from Winrock International visited Indonesia during late April and early May 1991 to gather detailed information for the analysis of electricity potential at sugar factories. The team, assisted by counterpart specialists from Perkebunan, the Indonesian Sugar Council (Dewan Gula), and private sugar companies, selected four sugar companies considered to be promising candidates for electric power investments. The factors considered in selecting the cases included production capacity, location, type of ownership (state or private), future plans, and a variety of other variables. These are addressed in more detail in Chapters 3 and 4.

The team visited three sugar factories in order to obtain necessary process data and to evaluate existing factory equipment and arrangements with respect to cogeneration. Through interviews the team also sought to gain impressions about company operations and management. The team obtained comparable information from a fourth sugar company (Trangkil). The companies are as follows:

Factory	Ownership	Location
Sragi	PTP XV-XVI	Pekalongan, Central Java
Trangkil	private	Pati, Central Java*
Gempolkrep	PTP XXI-XXII	Mojokerto, Eastern Java
Gunung Madu	private	Lampung province, Southern Sumatera

* not visited

In addition, this study examines the potential for design of new sugar factories that optimize power production. The team obtained information from a large private industrial group which is planning construction of several new large-scale sugar estates and factories in Southern Sumatera. Because of the large energy and economic potential from plants purposefully designed to produce both sugar and power efficiently, this "new mill" option was considered to be of equal merit to the existing, generally smaller sugar factory cases.

Lastly, this study incorporates technology which has been in successful operation for at least twenty years. For simplicity of combustion and fueling options, no investigation was made of the use of fuels other than No. 6 oil during off-season operation of the power generation system, although the power plants considered have the ability to burn a variety of solid and liquid fuels.

2.2 Growth and Evolution in the Sugar Industry

Industry growth, modernization and, to some extent, consolidation are occurring in the sugar sector. While sugarcane agriculture continues to face land competition, especially on Java, from rice and other crops and even from industrial development, domestic demand for sugar continues to rise with population and income increases. The industry is responding by opening up new cane lands and factories off Java, but also by expanding production capacity at some factories and seeking to increase production efficiencies through gradual modernization.

Public sector plants on Java will continue to dominate the industry for some time. However, industry expansion is almost all the result of private investment, most of which is new factories planned for off Java and near to growing load centers. Still, rehabilitation and expansion is planned for plants on Java as well, creating good conditions for power investments.

Compared to existing capacity of approximately 160,000 TCD in the sugar industry, new factory plans total over 76,000 TCD and planned expansions amount to nearly 50,000 TCD of new crushing capacity. (See Appendix A for listings of existing sugar factories' production data, factory expansions, and new mill plans.)

Current information obtained by the team on industry operations shows also a considerable bagasse surplus. The sugar industry as a whole in its 1990 campaign reported excess bagasse of over 1.1 million tonnes, out of a total bagasse stream of some 8.5 million tonnes. While this quantity may suggest a gradually increasing energy efficiency in the industry, it is also known that a number of alternative uses for bagasse may provide competition for its use as a fuel.

2.3 Alternative Uses of Bagasse and Cane Trash

Any time that a resource such as bagasse becomes valuable, it is worthwhile to invest more money in raising the efficiency with which it is used. This is true regardless of the nature of the end use for the bagasse, electricity, paper, or animal feed. However, the value of the end use will determine how much a firm will invest to conserve bagasse for uses outside of sugar milling.

Existing sugar mill power systems, with heat rates above 40,000 BTU/kWh are not capable of using fuel oil cost effectively even relative to gas turbines using middle distillates. For example, a mill with an off-season power generation heat rate of 60,000 BTU/kWh will have an energy cost of generation exceeding $0.16 per kWh on #6 oil. In addition, the bagasse value must generally stay below $7-8 per tonne in order for such a plant to feasibly export power even during the milling season. This value level is discussed in the following sections.

2.3.1 Pulp and Paper

In Indonesia today, three of the 41 pulp and paper manufacturers in the country use bagasse as one of their principal raw materials. Two of these are private, as is most of the industry, and one is state-owned; all three are in East Java, all are large-scale, fairly modern complexes, and all make a variety of products, including boards (see Part 1 Study, Annex 3). Little new information could be obtained on the operations of these companies in this study. However, the study team determined that a number of sugar factories with proximity to these plants either sell their surplus bagasse for a low price (approximately $US 6-to-7 per ton, ex-factory -- Gempolkrep), or exchange their surplus bagasse for No. 6 oil, which is used as a supplementary boiler fuel (PT Tri Gunabina, Kebon Agung factory). The value of the oil exchange transactions could not be learned.

While these cases represent a limited use of the Indonesia sugar industry's excess bagasse, it is clear that the potential for expansion exists at these relatively low values for bagasse and that the potential may be significant. The demand for paper in Indonesia is increasing rapidly. Furthermore, the study team learned of a number of planned private pulp, paper and board plants which are basing their operation partially on bagasse feedstocks. As in other cases, the availability of low cost excess bagasse and small transport distances from sugar factory to pulp plant appear to be necessary conditions. These conditions would tend to limit the pulp development potential of bagasse.

With increased boiler efficiency and sugar factory energy balance improvements, additional quantities of bagasse could be made available for pulp production. However as the financial analyses in Chapter 5 indicate, it may be far more attractive to plan electric power investments around bagasse availability. These analyses employ a range of values for bagasse approximating its value as a pulp feedstock.

2.3.2 Cane Tops and Leaves

While bagasse figures are fairly reliable, quantities of cane tops and leaves estimated by previous studies are based on average values for sugar industries where these have been measured. Cane tops and leaves, or trash, represent perhaps the largest and most cost-effective untapped biomass

resource in sugar producing countries, but also perhaps, the most uncertain. A.I.D., Winrock and a number of sugar industries have studied the costs, fuel values and energy balances of cane trash collection for use as an off-season boiler fuel. The results indicate that large-scale collection schemes can deliver biomass fuels at one-half to two-thirds of the cost of oil (at $19/bbl), while causing little or no negative agronomic effects.[4] Research continues into the agronomic and commercial prospects for trash collection as a boiler fuel.

In Indonesia, much of the cane field residues on Java are fed to cattle, while most of the production off Java is thought to be burned. This study recommends that a major research effort be initiated to investigate the economics of collecting, storing and using cane tops and leaves as a fuel. For purposes of this study, a value of $US 20 per tonne is used as a cost for cane trash fuel, the same as for wood fuels, to compare the effects on cogeneration investments for off-season fuels.[5]

2.4 Private Power in Indonesia

The combined forces of population growth and rapid economic and industrial expansion over the past decade have put tremendous pressure on Indonesia's power sector. The state-owned power utility, PLN (for Perusahann Umum Listrik Negara) is forecasting a 17 percent annual increase in electricity demand on Java, and nearly 12 percent in off Java locations over the next decade.

PLN has an installed capacity of over 8,500 MWs. This capacity is currently 47% oil-fired, 25% hydroelectric, and almost 20% coal. In addition, private and industrial facilities in Indonesia have an additional estimated 7,000-8,000 MWs of generating capacity.

The World Bank has estimated that Indonesia will require almost 12,000 MWs of new capacity in the next decade to meet electricity demands. A large percentage of this investment is expected to come from the private sector, primarily international private sources and joint ventures with Indonesia companies and consortia. In May 1991, the Government of Indonesia announced that 9,300 MW of new power in the expansion plans of the electricity sector will be turned over for private development. This announcement, and actions leading up to it, have set in motion large-scale preparations for private investment in electricity production.

2.4.1 Private Power Procedures

There currently exists a prequalification process whereby companies and joint ventures interested in Indonesia's power market must be prequalified by the Directorate of Electricity and New Energy (DJLEB - Direktorat Jendral Listrik dan Energi Baru) to develop private projects approved in the PLN expansion plan. At present, five projects have been advertised for private solicitation, including large coal-fired plants in Eastern and West Java, a geothermal power plant in West Java, and a peat-fired thermal plant in West Kalimantan. In June 1991, prequalification documents were made available from the DJLEB.

---

4 "Baling Sugarcane Tops and Leaves: The Thai Experience," A.I.D. Office of Energy Report 91-15, August 1991, Washington, DC.

5 See the earlier report, "Diversification of the Sugar and Palm Oil Industries: Indonesia," for a discussion on current use of tops and leaves as animal feed in Indonesia.

Detailed regulations for large-scale electric power sales to PLN have not yet been promulgated but are reported to be near completion in October 1991. The GOI has made private power development a priority in its economic planning for the power sector. It has established an inter-ministerial committee to oversee the development of specific procedures, prices, and contract documents. It is expected that specific incentives will be established for private power projects; however, many in the Indonesian energy sector feel that routine procedures are at least one year away.

At present, procedures for small projects (e.g., cogeneration) are at a preliminary stage. Nothing had been issued at the time of this writing in terms of a Presidential decree or inter-ministerial announcement, as with the projects undergoing prequalification. Companies seeking approval for a project are currently instructed to make a preliminary proposal to the inter-ministerial private power team. If it is acceptable, a letter of intent will be issued granting development rights to the project, and requesting detailed feasibility and a financing plan. Negotiations would presumably begin after acceptance of the feasibility study. New developments should be monitored closely.

2.4.2 Sugar Industry Private Power

Current private power initiatives in Indonesia focus on large power plants in the PLN expansion plan and not on the opportunities in sugar and other processing industries. As noted above, industrial cogeneration is beginning to receive more attention and has been identified as an important element in new capacity potential by the new inter-ministerial private power committee. Sugar industry interests must work to raise their profile as potential power suppliers.

Some sugar factories have small interconnections to PLN, primarily for purchasing electric power for the factory during off-season and to supplement power during down times. Other sugar factories (e.g., in Southern Sumatera) are isolated from the PLN grid and must use diesel generators as backup and off-season power. New investments in sugar industry cogeneration will, as a rule, require larger sized connections to PLN. The cost of these connections is estimated for each of the cases in this study. At this time, however, there is no pricing mechanism for sale of electricity by sugar companies to PLN.

Captive power is a potentially large new business opportunty for the industry. Some sugar companies have managed to take advantage of their excess electricity potential by serving local estate housing and facilities on the sugar estate (e.g., Gunung Madu). Sugar companies could become major power suppliers for industries established nearby, especially as power hungry industries increasingly must find non-PLN sources of electricity. The GOI has openly encouraged private electricity production for sale to other private customers as part of its new private power policy.

Indonesia policy makers may want to give consideration to special treatment for cogenerators in order to take advantage of expansion and new investment plans in the industry. In Hawaii, this was done in the 1970's when sugar industry power was specifically encouraged for environmental and economic reasons, before the implementation of U.S. private power laws, and this experience helped to refine private power regulations both nationally and in the state of Hawaii. A similar approach in Indonesia could help bring on line hundreds of MWs at comparatively low costs.

Chapter 3

PARAMETERS OF SUGAR INDUSTRY ELECTRIC POWER EXPORT

3.1 General Description of Indonesian Sugar Factories

The Indonesian sugar industry is composed of a large number of factories and sugar estates with diverse operating seasons, capacities, ownerships, geographic locations, yields, and processing equipment. While the factories have many diverse characteristics, in the area of steam and power production, they share certain common characteristics. Basic industry characteristics are shown in Table 3.1; a discussion of sugar industry energy issues follows in 3.1.1.

TABLE 3.1
CRITICAL SUGAR INDUSTRY PARAMETERS

Cane	Hand harvested, some burned and some green.
Typical Cane Yields	Range from 40 T/ha to 80 T/ha
Typical Sugar Yields	Range from 3.5 T/ha to 8.5 T/ha
Processing Season	Ranges from five to eight months per year, the mode being from May to October
Capacities	Range from 2,000 TCD to over 10,000 TCD
Factory Ownership	Both government and private ownership. Cane is produced either by individual farmers or by factory owners
Geographic Locations	Most of Java, Southern and Northern Sumatera, Sulawesi
Equipment	Ages, sizes and configurations of milling, boiling house, and steam and electric power generation equipment vary from factory to factory

3.1.1 Bagasse Production and Consumption

Bagasse, which is the fibrous residue of the cane stalk after the sugar bearing juice has been extracted, is the primary fuel to provide steam to the factories. Steam is used to provide motive

power to the mills, shredders, and other process mechanical drive turbines. Steam is used to drive turbine generators to produce electrical energy for the factory's in-plant electrical needs. Steam which exhausts from these steam turbine drives at about one atmosphere of pressure (1 kg/cm^2) is used to heat the sugar juice and evaporate water as the sugar laden juices proceed through the crystallization stage.

Because bagasse is a light, fluffy material of low specific gravity (approximately 0.11 specific gravity), the disposal of excess bagasse is difficult and often expensive. Storage of excess bagasse requires either compaction to higher density, or large areas to store the "green" bagasse. Indonesian sugar factories do not utilize surplus bagasse to generate electricity for sale to the PLN (the national electric utility company). Some factories sell surplus bagasse to paper mills and mushroom farmers, and other factories plan to develop other products such as furfural or particle board stock. At present, however, surplus bagasse sales are little more than a means to dispose of excess bagasse and are not considered to be a significant income producer.

Where factories produce an inadequate supply of bagasse to fuel their steam producing facilities, fossil fuels are burned, usually no. 6 fuel oil.

In general, Indonesian sugar factories are designed to "balance" the supply of bagasse against the internal energy consumption of the factory. A truly balanced sugar factory produces neither insufficient nor surplus quantities of bagasse. In reality, however, factories are designed to produce some excess bagasse in order to avoid utilizing fossil fuel. Whether an individual factory actually produces a surplus of bagasse depends on a variety of factors including cane quantity and quality. processing time efficiencies, bagasse moistures, equipment control and the physical condition of processing and steam generation equipment.

3.1.2 Electrical Connections to PLN

Some factories have small interconnections to PLN for the purpose of providing electric power during off-seasons. Other factories are totally isolated from the PLN system and rely on diesel electric generators to provide off-season power. Factories do not, as a rule, have interconnections with PLN which would permit the export of surplus electric energy from the factory into the PLN system. Further, there is no pricing mechanism at this time which would permit the sale of surplus electric energy to PLN. Some factories do, however, serve local estate housing and other factory owned equipment such as deepwell pumps.

3.1.3 Steam and Power Production and Consumption

Steam is produced in most Indonesian sugar factories at or about 20-30 kg/cm^2 (300-450 psig) and is superheated to 300-350°C (575-650 °F). Turbogenerators and turbine drives for the mills and shredders are either single or multistage type exhausting low pressure exhaust steam. The exhaust pressure is typically 1-1.5 kg/cm^2.

Steam generators are typically equipped with water wall furnaces, dumping grates, tubular air heaters and dry cyclonic flue gas cleaning equipment. Reported excess air ranges from 50-100% and exit gas temperatures range from 200-250°C.

Evaporator stations typically consist of four stages with some bleeding of vapor for heating or vacuum pan boiling. Venting of excess low pressure steam is limited and generally unintentional. To balance steam production, pressure reducing stations are used to make up for deficient exhaust steam from the prime movers. In general, steam generator automatic controls are pneumatic, and reasonably complex. Electricity is generated at 50 Hertz (50 cycles per second). Generating voltages vary, with newer machines generating at 6,000 volts and older machines generating at lower voltages.

3.1.4 Cane

Cane is hand harvested, although some factories are experimenting with machine cut cane. Cane may be either burned or unburned before harvest; percentages of green versus burned cane are not available. Cane is neatly bundled, in general, before manual and machine loading onto cane trucks, and contains little trash, dirt, or foreign objects. Factories make no attempt to clean the cane prior to milling.

3.2 Requirements for Cogeneration

3.2.1 Electrical Interconnections to PLN

An electrical interconnection from the sugar factory generating bus to the point of power transfer is required to export electric energy from the factory. In general, this will require a dedicated circuit breaker on the factory bus, a step up transformer with circuit breaker on the high voltage side, overhead transmission lines and metering and relaying equipment. The size and complexity of this interconnection depends on the magnitude of export energy as well as the size and nature of the export load. Export to the PLN distribution system will differ from export into the PLN high voltage transmission system or export to a local consumer such as a paper plant. Figures 1 and 2 schematically represent these two typical electrical interconnections.

The engineering and installation of such an interconnect is not significantly different from current technology employed by PLN. Regardless of the characteristics of the export load, the system must be designed to preserve the integrity of sugar operations. Electrical disturbances in the export load system must not cause nuisance tripping of steam generators and turbogenerators within the factory system. Such protection is routinely available, but requires special consideration in the design of a sugar factory cogeneration system.

3.2.2 Steam Generation

Although cogeneration can be accomplished utilizing the existing factory steam generation pressures and temperatures, maximizing export energy will require higher steam pressures and temperatures. Steam pressures in the range of 50-60 kg/cm^2 and steam temperatures in the range of 400-450°C are the most practical ranges for new cogeneration equipment. Such equipment has been in successful operation for at least twenty years. In addition, steam generators will be more efficient than current equipment, but will contain control systems only slightly more complex than existing equipment.

3.2.3 Factory Steam Usage

To take maximum advantage of new cogeneration systems, additional steam economy within the sugar factory will be required. Such additional economy can be achieved by modifying standard sugar factory equipment such as juice heaters and evaporators.

The existing factory steam turbine drives for mills, shredders, etc. need not be changed, although in situations such as a new factory, lower motive steam pressures may be utilized.

3.2.4 Turbogenerators

Turbogenerators for cogeneration systems will be of the automatic extraction/condensing type, equipped with extraction at the factory motive steam pressure and, in some cases, extraction at exhaust steam pressure as well. Turbogenerator condensing capability will most likely be provided by standard cooling towers.

3.2.5 Other Requirements

With the exception of the higher initial steam pressure and temperatures associated with cogeneration, other modifications to sugar factory equipment and systems involve technology commonly found within sugar factories in Indonesia.

Upgrading of welding skills and of feedwater treatment practices are the principal new requirements for higher steam pressures and temperatures. For a discussion on Cogeneration and the Sugar Factory, see Appendix B.

3.3 Local Manufacturing, Erection and Maintenance Capabilities

Indonesia has several qualified general contractors experienced in erecting power generation and sugar factory equipment. Quality of construction appears good and the ability to comply with strict codes such as the ASME Boiler and Pressure Vessel Code exists within the construction community. Many of these same skills are available among the sugar factory staff since the majority of repair and maintenance is performed by sugar factory personnel.

The ability to install and maintain steam and generation equipment with those higher pressures and temperatures required for cogeneration already exists among the Indonesian general contractors. At the seminar on the Potential for Electric Power Development in the Sugar Industry, held in Jakarta on Septemeber 25, 1991, the issue of manpower skills in operation of modern energy technology was raised. Although technical training will generally be needed in the sugar industry, the study team feels that the requisite skills can be readily developed by the staffs of the sugar factories.

FIGURE 1

TYPICAL INTERCONNECTION FOR EXPORT FROM SUGAR FACTORIES WITH DEDICATED 22 KV OR 33 KV LINE

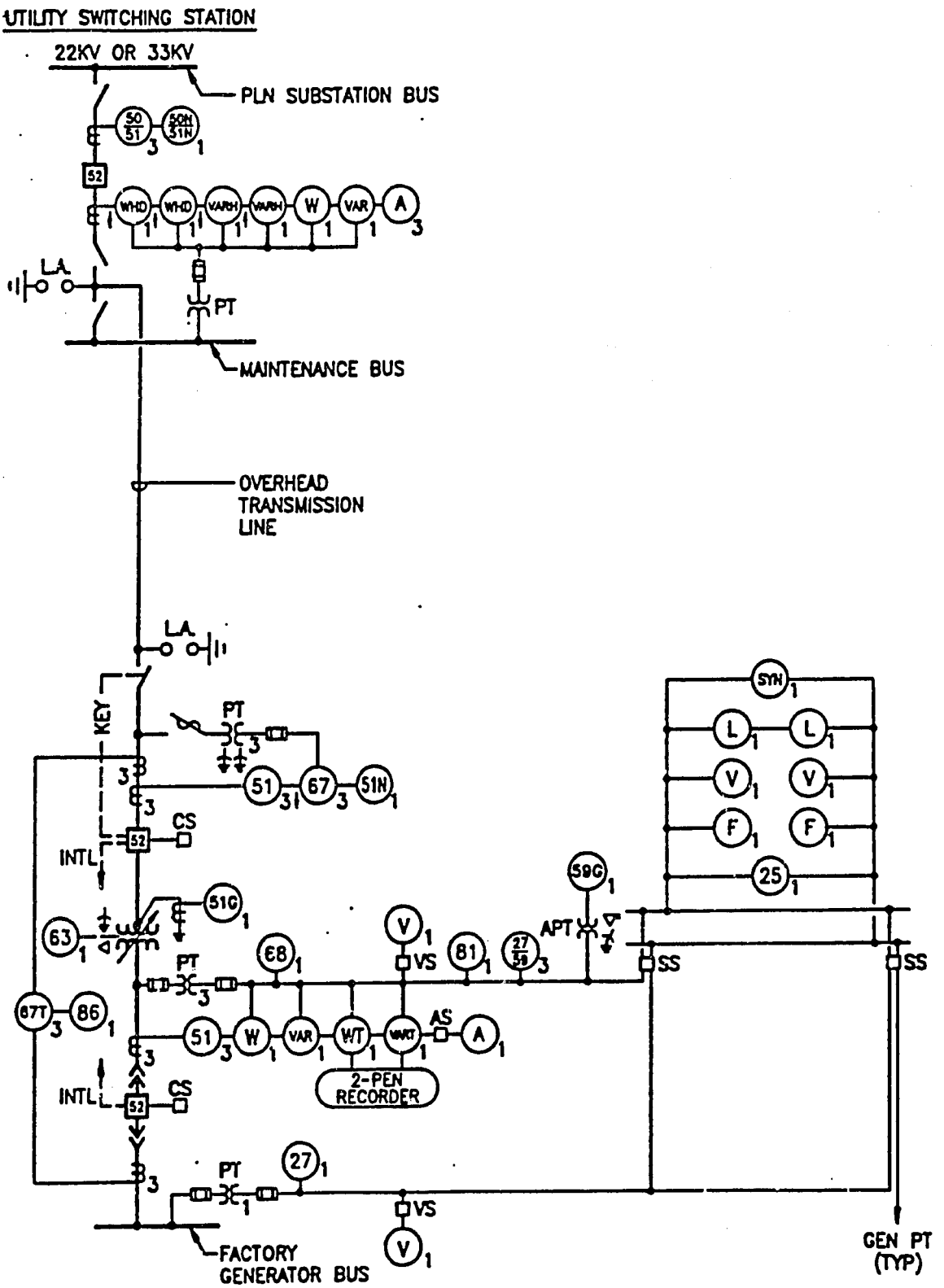

FIGURE 2

TYPICAL INTERCONNECTION FOR EXPORT FROM SUGAR FACTORIES WITH DEDICATED 115 KV OR 138 KV LINE

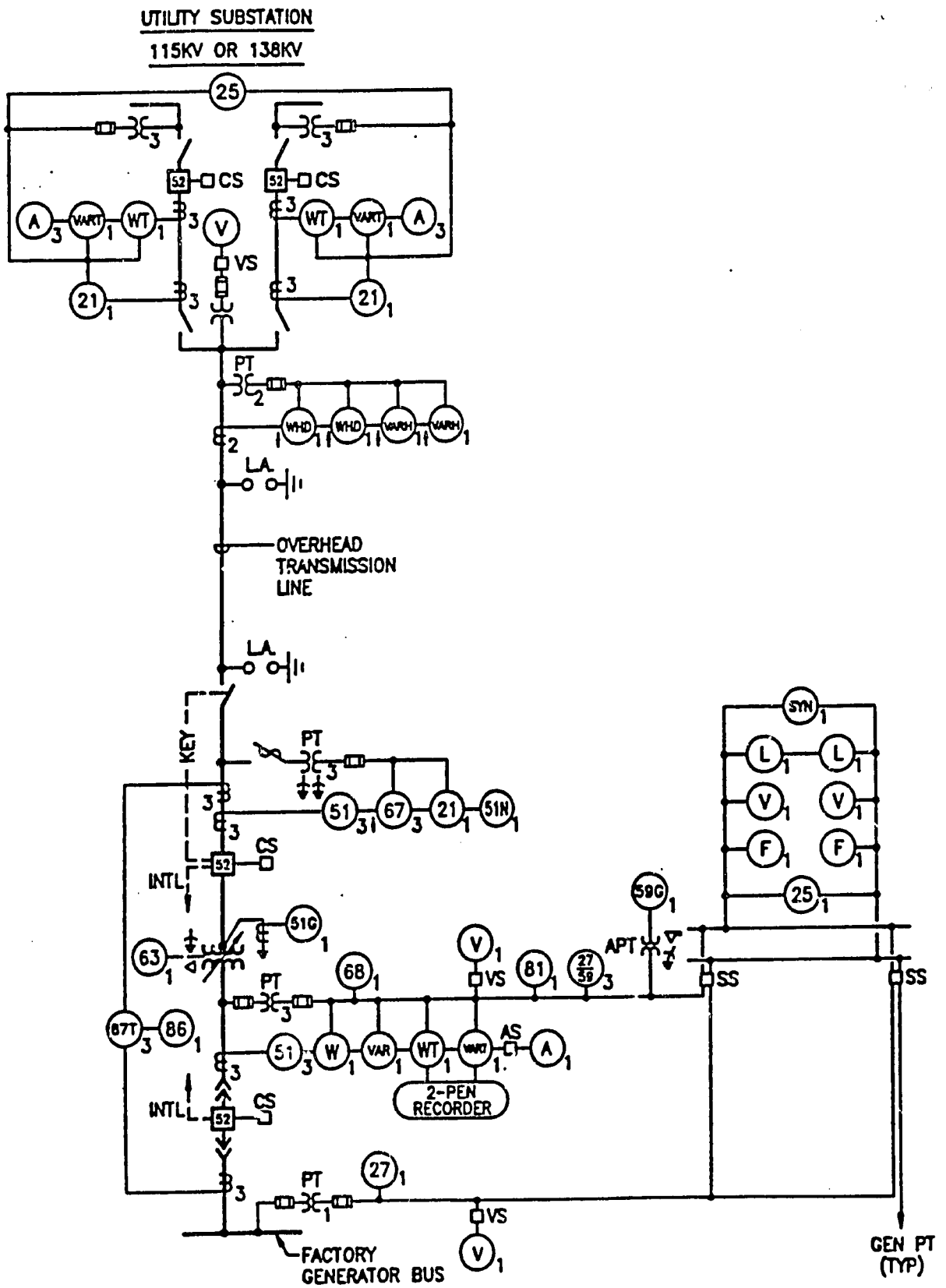

Local design and manufacture of sugar factory evaporators, heaters, vacuum pans, crystallizers, and small boilers (20 tonnes per hour or less) presently is taking place. Supply of evaporators and heaters which may be required to improve in-plant steam economy for cogeneration can be provided by local manufacturers.

Steam generators for sugar factories are highly standardized and are currently partially manufactured by local manufacturers under license to foreign firms. The foreign component of manufacture is steadily shrinking and is presently limited to drum heads and seamless tube and pipe. It can be expected that the design and partial manufacture of higher pressure and temperature steam generators associated with cogeneration will be performed by foreign manufacturers but that the local component will grow as the designs become more standardized. While development of drum and head manufacturing capability may always be limited by the relatively small market for higher pressure steam generators, the production of seamless tube and pipe is likely to develop in the near future since these materials are used in many industries.

Turbogenerators and electrical switchgear for sugar factories are currently provided by foreign sources (principally Japanese) and are likely to remain foreign sourced for the foreseeable future.

Indonesia reportedly has the ability to manufacture electrical transformers, although those specialized transformers utilized in cogeneration plant connections to PLN may be of foreign design. In addition, heavy construction equipment, such as large cranes, is readily available from local subcontractors.

Chapter 4

FACTORY CASE STUDIES

4.1 Methodology

In order to evaluate electric power potential in the sugar industry, four fundamental factory capacities were examined:

1. Factories of approximately 3,000 TCD
2. Factories of approximately 4,000 TCD
3. Factories of approximately 7,500 TCD
4. Factories of approximately 10,000 TCD

Production data were obtained from four factories representative of these capacities: Trangkil, Sragi, Gempolkrep, and Gunung Madu, respectively. These data included past, current, and projected 1991 production data and are contained in Appendix C.

Three of the factories were visited to obtain general data on equipment currently in use as well as equipment changes planned for the near future. These factory visits were necessarily brief and only one factory, Gunung Madu was processing at the time of the visit. No physical measurements were taken. Trangkil, the factory most representative of the 3,000 TCD capacity, was not visited; hence, only general conclusions are presented herein.

4.1.1 Energy Balances Without Cogeneration

Using the production data and other data gathered from interviews with operating personnel, factory energy balances were calculated for the factories assuming present equipment without cogeneration. These are discussed in each of the following case studies, and shown in the steam flow schematics as "Existing Arrangements" (Appendix D).

4.1.2 Bagasse Energy Export Power Calculations with Cogeneration

Using the same production data and assuming various modifications to the configuration of steam generators, turbogenerators, and process equipment, the export electric energy using bagasse was recalculated such that excess bagasse at the end of the grinding season was zero. These are also discussed in each case study, and shown in the steam flow schematics as "New Arrangement" (Appendix D).

4.1.3 New Mills

Since a number of new factories are planned for the Lampung area, energy balances were performed assuming all new factory equipment specifically intended to maximize bagasse electrical energy export. A cane processing rate of 10,000 TCD and cane parameters from Gunung Madu were used for this analysis.

4.1.4 New Equipment for Cogeneration

The factory upgrades for export power production consist of new equipment investments, depending on the individual mill and its configuration. These are generally as follows:

New steam generators. Steam conditions of 60 kg/cm^2 (about 875 psi) and 440°C (875°F) are used. Steam generators are preceded by high pressure feedwater heaters.

New turbogenerators. Of double or single automatic extraction/condensing design with exhaust pressures of 2.5" HgA. Cooling for condensers is provided by wet cooling towers.

Evaporator stations for cogeneration. Include pre-evaporators to permit vapor heating and vacuum pan boiling for improved steam economy and for condensate quality control.

The additional equipment in the sugar mills, which may also include piping, tie lines, auxiliaries, and associated engineering costs, is necessary not only to create the requisite steam pressure for the turbines, but also to economize on the use of bagasse fuel by the boilers.

4.1.5 Capital Costs

Capital costs for power system equipment are estimated for each export case, with and without cogeneration. Equipment costs are shown as "Cogeneration Equipment Cost" and "In Kind Replacement Cost." For each case, the difference between these costs represents the additional cost associated with cogeneration, for those factories which have planned expansion or replacements of equipment.

Export was assumed to be into the PLN grid at voltages consistent with the magnitude of export. Transmission line distance from the exporting factory to the nearest PLN substation are estimated; these costs are assumed to be part of the cogeneration project costs.

4.2 Trangkil (Nominal 3,000 TCD)

Production statistics provided indicate a processing season of approximately 200 days per year and a processing rate of 2,800 TCD for this private sugar company. No data were provided on equipment configurations and capacities; therefore, energy balances were not performed.

Trangkil reports no plans to expand capacity or upgrade equipment other than replacement of one small boiler within the next two years. Excess bagasse of 20,000 T/Yr reportedly is sold for mushroom culture.

Although a lack of information on the processing equipment at Trangkil prevented a more detailed analysis, the ultimate export capability of a factory of this capacity is approximately 6,000 kW assuming maximum efficiency equipment is installed throughout and the grinding time efficiency (processing time divided by available time) remains high. Approximately 28,000,000 kWh per year could be available for sale.

A typical configuration would indicate a five stage evaporator station, a 100 T/hr steam generator (or two 50 T/hr steam generators) with 60 kg/cm^2, 440°C steam output, a single or double automatic extracting-condensing turbogenerator rated 7,500 kW straight condensing with a 10,000-12,000 KVA generator. A cooling tower of approximately 80,000,000 BTU/hr cooling capacity would be employed to cool turbogenerator exhaust steam.

Energy export would be via a tieline to PLN's nearest distribution substation at 20 kv.

4.3 Sragi (Nominal 4,000 TCD)

4.3.1 Existing Factory

The factory processes 620,000 tonnes cane per year over a season of approximately 200 days. Four steam turbine driven mills (34"x78") equipped with light duty pressure feeders are preceded by a shredder and two cane knives.

The power system consists of two 60 T/hr, 18 kg/cm^2, 325°C steam generators equipped with air heaters and dry cyclonic dust collectors. Steam generators have dump grates, tube and tile construction, and baffled generating banks. Two 2500 kW backpressure turbine generators generate at 6,000 volts to supply factory loads of approximately 2,242 kW.

Four stage evaporation is used with an additional body available for on-line cleaning. Double sulfitation is practiced. River water (30-31°C) provides an estimated 35% of cooling water to the factory with a cooling tower providing the balance of cooling at 35°C.

There is no interconnection to PLN. Off season and startup power are provided by 2 x 325 KVA and 1 x 1,000 KVA diesel electric generators. Off season load is approximately 250 kW.

The factory is arranged to avoid creating surplus bagasse by using steam relatively inefficiently. Approximately 63 kg steam/tonne cane is used. A modern, self reclaiming bagasse storage house of 350 tonnes is part of the power system. Insulation throughout the plant is good.

4.3.2 Equipment For Cogeneration

The following modifications are made for increasing power for export at Sragi:

- 125 T/hr steam generator is added, with steam conditions of 60 kg/cm^2, 440°C. The two existing 60 T/hr steam generators are held in standby.
- 15,000 kW extracting/condensing steam turbine generator is added.
- The deaerator is changed to operate with 1.05 kg/cm^2 exhaust steam.
- Pre-evaporator is added and juice heaters and vacuum pans changed to vapor for heating.
- 108 million BTU/hr cooling tower is added to condense turbogenerator exhaust.
- 10 km, 22 kV tie line to the nearest PLN distribution substation is included.

Although this particular factory has the physical space to install the recommended equipment, the factory's existing equipment appears to be in good condition and serviceable for many years and replacement for the purpose of cogeneration is unlikely.

During the visit to the factory, some discussion was held regarding the potential for expansion. Although cane supply and transport appear to be major obstacles to expansion, any expansion, should it become feasible, would require increasing the sizes of the equipment examined in this case.

This case study is, therefore, presented as an example of factories which might expand from some lower level of production (i.e. Trangkil) up to 4,000 TCD, or which might need to replace steam generation equipment due to condition and age.

4.3.3 Energy Output

Factory Steam Flow #1 (Appendix D) represents the Sragi factory power system in its existing configuration while Factory Steam Flow #2 represents a modified system applicable in the case of the need for expansion or equipment replacement. Table 4.1 indicates the magnitude of bagasse electric energy export from an equipment configuration represented by Factory Steam Flow #2.

TABLE 4.1
COGENERATION DATA — SRAGI

Factory Steam Flow Schematic	2 (Appendix D)
Processing Rate	Nominal 4,000 TCD
Generation	13,992 kW
In-plant Use	2,695 kW
Export Power	11,297 kW
Annual Bagasse Export Energy	50,271,650 kWh
Boiler Efficiencies	73.13% HP; 61.81% MP
High Pressure Steam Generator Flow	121.53 T/hr
Med. pressure Steam Generator Flow	0
Flow to Condenser	47.22 T/hr
Rated Turbogenerator Capacity	15,000 kW
Surplus Bagasse	0

TABLE 4.2
CAPITAL COSTS — SRAGI COGENERATION

	Cogeneration Equipment Costs ($US x 1000)		In-Kind Replacement Costs		
Equipment	Foreign	Local	Foreign	Local	Notes
Steam Generator & Auxiliaries	8,713	3,318	1.300	1,297	1
Cooling Tower, Basin, Pumps, & Piping	311	56	0	0	2
Turbogenerator & Auxiliaries	4,440	430	1.468	160	3
Pre-Evaporator	50	45	0	0	
Tie Line (Utility Connection)	863	109	0	0	4
Engineering & Project Management	712	152	155	16	
Import Duty	3,772	0	731	0	5
Subtotal	18,861	4,110	3,654	1,473	
Grand Total (Foreign + Local)	22,971		5,127		

NOTES:
(1) 125 T/hr HP; 120 T/hr MP
(2) 108×10^6 BTU/hr
(3) 15,000 kW Condensing Unit, 5,000 kW Backpressure Unit
(4) 10 km, 22 kV
(5) 25% of Foreign Costs

4.3.4 Capital Costs

Table 4.2 indicates the installed cost of equipment required for expansion with and without cogeneration for those stations of the sugar factory which would be affected by cogeneration. Local costs are in US dollar equivalents.

4.4 Gempolkrep (Nominal 7,500 TCD)

4.4.1 Existing Factory

The current capacity of the factory is stated as 4,550 TCD. Plans exist for expansion to 7,500 TCD and, perhaps, eventually to 10,000 TCD. Factory planning for expansion to 7,500 TCD includes a new 120 T/hr steam generator, a new 4,500 kW backpressure turbogenerator, a new evaporator train and new mill. This expansion plan offers a promising opportunity for additional investment in power production.

The current factory equipment consists of:

- five mills (36"x78") equipped with light duty two-roll pressure feeders. The fifth mill is driven by an electrified hydraulic drive while the other mills are equipped with steam turbine drives. Two sets of knives and a shredder precede the mills.

- The power system consists of three steam generators, two turbogenerators and two diesel electric generators. A small interconnection to PLN is used for off-season power.

- Steam is generated at 20 kg/cm^2, 325°C by the three steam generators, each of which is equipped with an air heater and dry cyclonic dust collector. Two steam generators (75 T/hr and 30 T/hr) are equipped with dump grates while the third unit (20 T/hr) is equipped with a ward furnace. Tube and tile construction and baffled generating banks are used throughout.

- Two backpressure turbogenerators of 3,500 kW and 2,400 kW are used.

- Evaporation is four stage and double sulfitation is practiced. A spare evaporator body permits on-line cleaning.

- Two diesel electric generators of approximately 550 kW and 700 kW provide off-season and start-up power.

- Cooling water is provided from river water with a portion (75%) recirculated through a cooling tower.

- Bagasse storage is essentially non existent.

- Condition of insulation is fair.

4.4.2 Equipment for Cogeneration

A new steam generator is assumed to generate steam at 60 kg/cm^2, 440°C and an automatic extracting/condensing turbogenerator of 20,000 kW is used in place of the proposed new backpressure turbogenerator. A cooling tower of 175 million BTU/hr to condense turbogenerator exhaust and a pre-evaporator are part of this option.

A 10 km, 22 kV tie line is included.

4.4.3 Energy Output

Factory Steam Flow #3 represents the Gempolkrep factory expanded to 7,500 TCD using equipment similar to existing equipment.

Factory Steam Flow #4 represents Gempolkrep, expanded to 7,500 TCD, with new equipment designed for cogeneration.

Table 4.3 indicates the magnitude of export represented by Factory Steam Flow #4.

TABLE 4.3
COGENERATION DATA— GEMPOLKREP

Factory Steam Flow Schematic	4 (Appendix D)
Processing rate	Nominal 7,500 TCD
Generation	18,260 kW
In-Plant Use	6,187 kW
Export Power	12,073 kW
Annual Bagasse Export Energy	47,230,000 kWh
Boiler Efficiencies	71.3% HP; 63.9% MP
High Pressure Steam Generator Flow	120 T/hr
Medium Pressure Steam Generator Flow	98.6 T/hr
Flow to Condenser	78.96 T/hr
Rated Turbogenerator Capacity	20,000 kW
Surplus Bagasse	0

4.4.4 Capital Costs

Table 4.4 indicates equipment costs for the current factory plan with and without cogeneration.

TABLE 4.4
CAPITAL COSTS — GEMPOLKREP COGENERATION

	Cogeneration Equipment Cost ($US x 1000)		In-Kind Replacement Cost		
Equipment	Foreign	Local	Foreign	Local	Notes
Steam Generator & Auxiliaries	8,364	3,012	1,300	1,927	1
Cooling Tower, Basin, Pumps, & Piping	503	90	0	0	2
Turbogenerator & Auxiliaries	5,428	537	1,321	145	3
Pre-Evaporator	100	70	0	0	
Tie Line (Utility Connection)	863	109	0	0	4
Engineering & Project Management	771	165	146	15	
Import Duty	4,007	0	692	0	5
Subtotal	20,026	3,983	3,459	2,087	
Grand Total (Foreign + Local)	24,019		5,546		

NOTES:
(1) 120 T/hr HP; 120 T/hr MP
(2) 175×10^6 BTU/hr
(3) 20,000 kW Condensing Unit, 4,500 kW Backpressure Unit
(4) 10 km, 22 kV
(5) 25% of Foreign Costs

4.5 Gunung Madu (Nominal 10,000 TCD)

4.5.1 Existing Factory

This factory is the largest and most efficient in Indonesia. It processes 1,500,000 tonnes cane per year in approximately 170 days. Part of a group of companies privately held, plans for a new 10,000 TCD factory in a nearby district of Southern Sumatera are moving forward.

Gunung Madu reports surplus bagasse quantities of 800 to 1,000 tonnes per day, and approximately 150,000 T/Yr. In 1991, Gunung Madu is planning to sell its bagasse as feedstock for a nearby furfural plant under construction. Current bagasse storage is outdoors.

Existing sugar factory equipment consists of the following:

- Six, four roller mills (42"x80") are preceded by a shredder and two sets of cane knives.
- The power system consists of two steam generators (120 T/hr and 84 T/hr) generating at 21 kg/cm^2, 340°C. Two 5,000 kW backpressure turbogenerators and diesel electric generators (1,600 kW and 800 kW) provide electric power. Diesels are used during off-seasons and for start-up. There is no interconnection to the PLN electrical system.
- Evaporation is four stages with vapor used for vacuum pans and heating. An eight hour shutdown is taken every ten days for chemically cleaning evaporators and for routine maintenance.
- Process cooling water is provided by a spray pond with make-up from deep wells.
- A significant load exists (600 kW) from adjacent factory-owned housing and shops.
- Condition of insulation is good and few steam leaks were observed.

4.5.2 Equipment For Cogeneration

Although current plans to add a 120 T/hr steam generator are too far along to change, this case presumes a high pressure steam generator (60 kg/cm^2, 440°C) and is to be installed sufficient to dispose of all excess bagasse.

A cooling tower of 165 million BTU/hr is included.

A 25,000 kW turbogenerator with extraction/condensing capability and a 40 km, 138 kV transmission line are included.

4.5.3 Energy Output

Factory Steam Flow #5 shows the power system operating with its planned new 120 T/hr steam generator, continuing to produce a large daily surplus of bagasse approximating 125,000-150,000 tonnes over the crushing season.

Factory Steam Flow #6 shows the factory power system operating with a high pressure steam generator and new turbogenerator designed for export with no surplus bagasse produced. In essence, this case involves developing a power plant for Gunung Madu's excess bagasse. Table 4.5 indicates the magnitude of surplus power available for sale if the current replacement plans had included cogeneration.

TABLE 4.5
COGENERATION DATA — GUNUNG MADU

Factory Steam Flow Schematic	6 (Appendix D)
Processing rate	10,000 TCD
Generation	24,008 kW
In-Plant Use	8,743 kW
Export Power	15,265 kW
Annual Bagasse Export Energy	58,572,000
Boiler Efficiencies	70.6% HP; 62,81% MP
High Pressure Steam Generator Flow	120 T/hr
Medium Pressure Steam Generator Flow	151.85 T/hr
Flow to Condenser	76.29 T/hr
Rated Turbogenerator Capacity	25,000 kW
Surplus Bagasse	0

4.5.4 Capital Costs

Table 4.6 indicates capital costs with and without cogeneration.

TABLE 4.6
CAPITAL COSTS — GUNUNG MADU COGENERATION

	Cogeneration Equipment Cost ($US x 1000)		In-Kind Replacement Cost		
Equipment	Foreign	Local	Foreign	Local	Notes
Steam Generator & Auxiliaries	8,364	3,012	1,300	1,927	1
Cooling Tower, Basin, Pumps, & Piping	475	85	0	0	2
Turbogenerator & Auxiliaries	6,786	672	0	0	3
Pre-Evaporator	0	0	0	0	
Tie Line (Utility Connection)	1,848	312	0	0	4
Engineering & Project Management	894	191	65	7	
Import Duty	4,592	0	341	0	5
Subtotal	22,959	4,272	1,706	1,934	
Grand Total (Foreign + Local)	27,231		3,640		

NOTES:
(1) 120 T/hr HP; 120 T/hr MP
(2) 165×10^6 BTU/hr
(3) 25,000kW Condensing Unit, 4,500kW Backpressure Unit
(4) 40 km, 138 kV
(5) 25% of Foreign Costs

4.6 New Factory

4.6.1 Standard Factory

Since several new factories of the size of Gunung Madu are planned, this analysis compares a factory with equipment similar to Gunung Madu (Factory Steam Flow #5) to a factory designed to maximize cogeneration (Factory Steam Flow #7). Factory equipment is assumed to be identical to Gunung Madu's existing factory.

4.6.2 Equipment For Cogeneration

This would include the following:

- Two 150 T/hr high pressure steam generators.
- A 45,000 kW double automatic extracting/condensing turbogenerator is included along with a cooling tower of 210 million BTU/hr capacity.
- Factory motive steam pressure is reduced to 11.25 kg/cm^2 to improve cycle efficiency.
- A five-stage evaporation train is employed.
- A 40 km, 138 kV tie line is included.

4.6.3 Energy Output

Factory Steam Flow #7 depicts the equipment arrangement for cogeneration.

Table 4.7 shows the magnitude of export from the cogeneration configuration.

TABLE 4.7
COGENERATION DATA — NEW FACTORY

Factory Steam Flow Schematic	7 (Appendix D)
Processing rate	10,000 TCD
Generation	41,280 kW
In-Plant Use	8,696 kW
Export	32,584 kW
Annual Bagasse Export Energy	125,025,000
Boiler Efficiencies	70.6%
High Pressure Steam Generator Flow	299 T/hr
Medium Pressure Steam Generator Flow	0
Flow to Condenser	95.95 T/hr
Rated Turbogenerator Capacity	45,000 kW
Surplus Bagasse	0

4.6.4 Capital Costs

Table 4.8 indicates the costs with and without cogeneration. For the standard factory, no equipment is included to handle or dispose of excess bagasse.

TABLE 4.8
CAPITAL COSTS — NEW FACTORY COGENERATION

	Cogeneration Equipment Cost ($US x 1000)		In-Kind Replacement Cost		
Equipment	Foreign	Local	Foreign	Local	Notes
Steam Generator & Auxiliaries	20,910	7,530	2,600	3,854	1
Cooling Tower, Basin, Pumps, & Piping	604	108	0	0	2
Turbogenerator & Auxiliaries	12,214	1,209	2,936	107	3
Pre-Evaporator	150	45	0	0	
Tie Line (Utility Connection)	2,094	312	0	0	4
Engineering & Project Management	1,797	387	253	51	
Import Duty	9,417	0	1,447	0	5
Subtotal	47,186	9,591	7,236	4,227	
Grand Total (Foreign + Local)	56,777		11,463		

NOTES:
(1) 2 - 150 T/hr HP; 2 - 120 T/hr MP
(2) 210×10^6 BTU/hr
(3) 45,000 kW Condensing Unit, 10,000 kW Backpressure Unit
(4) 40 km, 138kV
(5) 25% of Foreign Costs

4.7 Summary of Costs

Reviewing the capital costs of cogeneration, it can be seen that boiler costs are roughly proportional to export capacity, with the exception of the Sragi mill where the boiler cost is relatively higher due to a need to completely replace the existing facilities. The turbogenerator and piping costs are about proportional to exports of electricity unlike the electrical interconnection, which is less so.

The key factors determining the costs of the electrical interconnection are the export voltage and the distance to the receiving transmission line. The two Java plants, with relatively short connection distances, have the same interconnection costs while the two Sumatera plants, with their 40 km high voltage transmission cost more than twice as much. The volume of the export is seen to be less important than distance and voltage since the volume of power for Gunung Madu is only about half that for one of the new factories. Both of the Java factories can export power at medium (sub-transmission) voltage over relatively short distances (<15 km) while the Sumatera plants require about 40 km of transmission at 138 kV.

Chapter 5

ECONOMIC AND FINANCIAL CASE STUDIES

In this chapter the alternative cogeneration schemes developed in the previous chapter are analyzed for their economic and financial viability. The cost for electric power in each alternative is compared against selected possible power purchase prices as well as against the economic avoided cost of the PLN system in various parts of the country.

5.1 Financial versus Economic Analysis for Indonesia

Both financial and economic analyses are used. The former gives results in terms of revenues and costs to the owner of the plant while the latter gives benefits and costs with respect to the opportunity costs of the resources deployed. The economic and financial results differ a bit from one another in degree but not in kind. The main differences between the financial and economic cases are due to three main factors.

1. In the economic analysis, costs and benefits are assigned in the period in which the resources are committed while in the financial analysis costs and benefits are assigned to the period in which payment is made. The main effect of this is that in economic analysis costs are higher at the beginning of the project than in financial analysis. Correspondingly, the rate of return that is calculated tends to be lower than is the case in the financial analysis where payments for investment are spread out over the life of the project.

2. The economic analysis uses the PLN avoided cost as its benefit measure while the financial analysis uses a power purchase price which may be higher or lower than the avoided cost, as its measure of benefit.

3. Indonesia controls the prices of refined oil products, thus the economic or world costs of heavy fuel oil and middle distillate will differ from the prices that are charged by Pertamina, the state oil company. This means that avoided energy costs will differ in the economic and financial analyses. In the case of heavy fuel oil, the price charged by Pertamina is too high whereas the price charged for middle distillate is too low.[6] Both product prices are now well out of line with crude oil prices and international refined product prices.

6 Under new prices promulgated in early July, 1991, the price of HFO is now about $18.00/barrel while diesel is $24.00 per barrel. The HFO price is well above world market levels and the diesel price is at least 3$/barrel below the Singapore market.

5.2 Opportunity Cost of Bagasse in Electric Power

The basic notion that underlies the overall economic analysis of the proposed projects is that of *opportunity cost.*

- What is the value of bagasse in alternative uses - cogeneration, furfural, paper, etc.?
- How do the resource values in these different end uses compare with one another?
- How does the investment in bagasse-fired cogeneration compare with other investment in electricity supply?

In chapter 2, alternative uses of bagasse in Indonesia were discussed. The availability and cost of bagasse fuel is a key determinant of the feasibility of cane-derived power. Hence, concerns about fuel supply and price remain essential to any feasibility study of power export from sugar mills.

At the present time there is some use of bagasse in the paper, pulp and board industry. Sugar mills report selling bagasse at prices ranging from Rp 3,000-12,000/tonne. These prices translate to as much as Rp 20,000/tonne delivered, a price that some paper and board mills reported paying. These bagasse prices compare with typical prices in the Rp 3,500-10,00/tonne range *ex mill*, that were reported in an earlier Winrock study. In the present analysis, a similar range of bagasse values is used for comparison with its use as a boiler fuel.

5.3 Cogeneration Investment Alternatives

In Indonesia's private power environment new high efficiency boilers and turbogenerators appear most promising at new sugar mills or those that are modernizing or relocationg. The rates of return for such investments are equivalent to those for incremental efficiency investments in sugar factories that yield only moderate volumes of additional electric power. In such cases, the economic and financial appraisal of the project takes account of just those capital costs that are additional to the mill's standard configuration for sugar milling. The larger scale investment alternatives typically produce from 12-40 MW of exportable power, far more than the 1-3 MW typical of the incremental add-ons.

Given Indonesia's expansion and relocation of its sugar industry, there exist several potential sites where large (for sugar) cogeneration projects may be feasible. The larger cogeneration projects will be less vulnerable to the adverse financial effects of regulatory delay than will the smaller ones since the management overhead varies little with the size of the project.

5.3.1 Assumptions

Technical specifications for the cogeneration projects were presented and discussed in the last section. The economic analysis uses those specifications and investment costs along with the following key additional assumptions:

- The plant uses bagasse for the milling season and then generates electricity using HFO (#6 oil) for the off-season;[7]

- The total generating year is 325-335 days of 24 hours/day, 95% availability;[8]

- The price of crude oil used in the baseline case is $18.50/barrel giving an ex-refinery price for HFO of $14.34/bbl or more with inclusion of local delivery charges;

- A small amount of bagasse is assumed to be purchased from outside in the cases of some mills (e.g., Sragi);

- Labor costs are assumed not to vary over the various investments and are a minor element in the overall generation costs;

- The purchaser of electricity is assumed to be the PLN in all cases;[9]

  * In the economic analysis, the benefit of the cogenerated electricity is PLN's avoided cost for that region during both peak and base periods, a value that varies from Java to Sumatera;

  * In the financial analysis, the revenue from power sales is assumed to be a power purchase price which ranges from $0.06/kWh to $0.09/kWh. A value of $0.075/kWh is used for the baseline case.

- In the financial analysis, the project is assumed to be financed by a combination of private and public financing at rates of 11% under conditions of zero inflation;

- The baseline opportunity cost of bagasse at the mill is conservatively assumed to be $8/tonne and outside purchases of bagasse cost $12/tonne. For some mills, especially those in Sumatera, these prices will be too high, thus improving results for bagasse electicity.

All of these assumptions, along with other key details, are given in the financial and economic analysis tables of the base cases given in Appendix F. In Table 5.1, below, the key cost and performance elements of the four alternatives studied are presented; these are summarized from Chapter 4.

7 This is assumed because use of no. 6 oil is technically simple to do in sugar factory power plants, it is practical to model in Indonesia, and factories will want to minimize bagasse storage. Other fuels, such as coal and cane field residues may, on balance, offer lower annual fuel costs, but likely higher capital investment costs.

8 This is because "firm" year-round power will be more valuable to PLN.

9 In practice, sugar factories may sell to commercial or industrial customers who may not have PLN service.

TABLE 5.1
SUMMARY OF INSTALLED COSTS OF VARIOUS OPTIONS

Item Factory:	Sragi	Gempolkrep	Gunung Madu	New Mill
Export Capacity (MW): In Crop/Out of Crop	11.3/13.5	12.1/17.5	15.3/23.5	32.6/45
A. Boiler & Auxiliaries	12,031	11,376	11,376	28,440
B. Turbogenerator & Piping	5,331	6,728	8,018	16,534
C. Electrical Interconnect (including tie line transformer & tie line)	972	972	2,160	2,406
D. Design/Project Mgmt.	864	936	1,085	2,174
E. Duty	3,772	4,007	4,592	7,073
F. Total Cost	**22,971**	**24,019**	**27,231**	**56,777**

NOTE: Cost categories are summarized and combined from the tables in Chapter 4, adding foreign and local costs together.

5.4 Power Generation Costs, Plant Efficiency, and Investment Costs

The generation costs for electric power determine the financial and economic feasibility of proposed cogeneration investments. In the present report, these generation costs are based on large-scale units operating throughout the year which generate power for $0.045-0.06 per kWh. The factors which determine the range of generation costs for these projects are discussed below.

Also in order to analyze larger scale investment properly, it has been necessary to modify the approaches used recently by Winrock in both Indonesia and Thailand for calculating project benefits. This change is of major importance to the overall project analysis and is discussed directly below.

In order to gain credit for baseload operation year round and to receive a price commensurate with the replacement of costly gas turbines at peak times, the cogeneration plant must have an availability of 7,000-8,000 hours per year. Such availability normally can only be achieved if other fuels are used in the off-season, since bagasse stores poorly and will generally be used during milling. The avoided cost criterion used in previous reports accepted the baseload cost calculated by the utility as the correct measure of the benefit of additional power from sugar mills. Recent evidence contradicts this view. If the electricity supply is currently short and is expected to be inadequate in the future, then the correct measure of the value of electricity produced in cogeneration is the avoided cost of generation at both peak and base. Both the Java and Sumatera grid systems into which electricity from the sugar mill might feed are expected to remain in deficit until the next century. As a result, the proper measures of power system benefits are the avoided costs at both peak and base periods.[10]

[10] This point is demonstrated in the research paper "True Short run Marginal Cost: Applications to Pricing of Cogenerated Power" by Charles Feinstein, The World Bank, Washington, DC, 1991.

This is in contrast to earlier studies, where low capital investment scenarios with less power production were analyzed because electricity purchase prices offered by utilities were low, reflecting their perceived baseload cost of generation.[11] Under this scenario the cases which featured minimal capital investment relative to the power output were the optimum ones.[12] However, these cases did little to improve the low thermal efficiencies of the existing sugar mill setup, and generally made off-season operation on fuels such as oil or coal uneconomic. One exception, off-season power plant operation on cane trash, still appeared economically attractive, stimulating a major research initiative to determine these costs more accurately under commercial conditions. Still, the fuel netback values that characterize the low investment/low efficiency options are better but not decisively so relative to other non-electricity end uses for the bagasse.[13]

Noting the overall attractiveness of attaining higher efficiencies in power generation, especially in isolated regions where the cogeneration plant might be required as a baseload unit, Winrock analysts have looked increasingly at higher pressure boilers and higher capacity systems. In particular, the capability of using fuel oil efficiently in the off-season is now seen as a requirement not an option. Existing sugar mill power systems, with heat rates above 40,000 BTU/kWh are not capable of using fuel oil cost effectively even relative to gas turbines using middle distillates. For example, a mill with an off-season power generation heat rate of 60,000 BTU/kWh will have an energy cost of generation exceeding $0.16 per kWh using #6 oil. In addition, the bagasse value for such a plant must generally stay below $7-8 per tonne in order for such a plant to feasibly export power even during the milling season.

For Indonesia, using the marginal cost yardstick expands the scope of feasible investments and pushes the overall analysis of projects in the direction of larger, more efficient units. What this shift in emphasis means is that the capital component of generation will rise while the fuel cost component, during the milling season, will fall. The expected heat rates of the proposed units range from 13,000-15,000 BTU/kWh. Such heat rates are low enough to use heavy fuel oil for the entire off-season.

The similarities of the proposed investments means that the average generation costs for the units will cluster quite closely. The base case generation costs for the four units ranged from $0.051-0.057 per kWh (Rp 101-107/kWh).

Table 5.2 breaks down the base case generating costs for the Sragi Mill. The generation costs shown represent full costs. That is, they include import duties, financing costs, project development, O&M, labor, fuel, and all other relevant cost categories. The return on owner's equity is missing from these calculations and will add another $0.005-0.015/kWh to the required revenue per kilowatt hour. It is significant that the costs of generating power are relatively stable

11 In analyzing sugar cogeneration prospects in Thailand in 1986 and 1989, base case power purchase prices under $0.05/kWh were used to evaluate investments.

12 The initial offering prices for power purchases are often unattractive to project developers, and these very low prices have been one of the prime forces behind the minimum investment approaches used in the past. Utility generation cost calculations which are closer to true avoided costs of future power generation are becoming more accepted, and thus tend to be considerably higher today than in earlier studies by the World Bank and other IFIs.

13 A.I.D. Op. Cit. Section 6.

over a wide range of operating conditions and input costs, provided the plant can continue to run at a capacity figure of 85% or more.

Table 5.3 shows the range of generation cost sensitivities for all four plants since their average generation costs are extremely close to one another. Not surprisingly, the most sensitive parameter for generation cost is the price of money. As long as financing is available at real rates of 11%, then the generation cost will stay in the $0.05-0.057/kWh range. A plausible range of (real) future oil prices will cause generation costs to change by less than 6%. A situation in which bagasse is available at very low prices, as might prevail in new mills in Sumatera, will lead to a 7% fall in generation costs while $12/tonne bagasse prices will increase average generation costs by about $0.003 or 6%. To test the sensitivity of generation costs to changes in capital costs, the team looked at 20% variations in plant capital costs, both up and down. It was found that such variations could lead to 10-11% changes in overall electricity export costs.

TABLE 5.2
POWER GENERATION COSTS AT SRAGI:
COMPOSITION AND SENSITIVITIES

Item		$/kWh	Rp/kWh
Fuel Costs	Bagasse @ $2/tonne	0.0035	7
	Bagasse @ $6/tonne	0.0105	21
	Bagasse @ $8/tonne	0.0140	28
	Bagasse @ $12/tonne	0.0210	42
	HFO @ $14.34/bbl*	0.0330	66
	HFO @ $18.10/bbl*	0.0420	83
	Cane Trash @ $20/tonne	0.0280	56
Other Costs	Capital & Operating	0.0310	62
Total Generation Costs	In Crop: Bagasse @ $2/tonne	0.0345	69
	@ $6/tonne	0.0415	83
	@ $8/tonne	0.0450	90
	@ $12/tonne	0.0520	103
	Out of Crop: HFO @ $14.34/bbl	0.0640	127
	HFO @ $18.10/bbl	0.0720	143
	Annual Average** (w/ bagasse @ $8/T)		
	HFO @ $14.34/bbl	0.05370	107
	HFO @ $18.10/bbl	0.05700	113

NOTES:* A price for HFO of $14.34/bbl corresponds to a crude oil price of $18.50/bbl internationally, about right for current prices. The price for HFO charged by Pertamina is currently about $18.10/bbl, which is high relative to world market levels as it corresponds to a crude oil price in the range of $24-26/bbl. The government is supposed to undertake significant energy pricing reforms under the terms of a loan agreement with the World Bank. The $14.34/bbl represents a base case economic price for HFO while the $18.10/bbl represents a base case financial price for HFO.

** In the cost calculation above, it is assumed that HFO is used for about 58% of total generation for export. Using more bagasse would lower the average annual generation cost.

TABLE 5.3
KEY SENSITIVITIES FOR INDONESIAN COGENERATION INVESTMENTS: IMPACTS ON GENERATION COSTS

Item	Change from Base Case	$/kWh	Rp/kWh
Oil Prices	-$2.50	-$0.003	-6
(Crude oil basis)	($16/bbl)		
	+$3.50	+$0.002	4
	($22/bbl)		
Plant Capital Costs	+20%	+$0.005	10
	-20%	-$0.0055	-11
Bagasse Price	$2/tonne	-$0.0037	-7
	$12/tonne	+$0.0029	6
Interest Costs, Local Private US$ Financing	19%*	+$0.014	28

NOTE: * The reader should note that the higher interest rate should only be used if the entire analysis is put into nominal rather than constant money units. Should that happen then revenues will also rise.

5.5 Fuel Price Issues

It was a working assumption of this project that bagasse would be available to cogenerators in whatever volumes might be required. The reasoning behind this assumption is quite direct; the high cost of transporting bagasse limits the value of that fuel to customers at any significant distance from the mill. While in country, the Winrock team found that some bagasse was being purchased by pulp and paper mills for prices as high as Rp 20,000/tonne, including the cost of transport. More typically, bagasse prices at the sugar mill ranged from Rp 3,000-10,000/tonne. The team was told that bagasse transport costs typically ranged from Rp 3,500-10,000/tonne. These costs are about the same as bagasse transport costs in Thailand.[14]

Given the relatively high transport costs of bagasse, sugar mills located far from board mills are unlikely to find any market for their surplus bagasse. Independent of the opportunity cost, all mills will incur some costs as they must hire crews to maintain the bagasse piles, prepare them for use and dispose of ash. To be conservative, a figure of $8/tonne (approx. Rp 15,000) was chosen as the base case bagasse cost for making comparisons among different generation investment options.[15] In larger mills, the bagasse may have a higher opportunity cost if the mill's greater efficiency makes it worthwhile to co-locate a bagasse-using facility such as a furfural plant or a board mill.[16]

14 In 1989, Winrock consultants in Thailand found that a typical sugar mill selling bagasse to board or paper plants could generally expect to receive Rp 3,500-7,500/tonne. The highest figure that the consultants encountered was Rp 8,500/tonne.

15 A price of $8/tonne (Rp 15920/tonne) corresponds to approximately $0.91 (Rp 1,800) per million BTU. As a point of reference, the current world crude oil price, $18/bbl, is about $3.20 (Rp 6,400) per million BTU.

16 At this time a furfural plant is under construction near the Gunung Madu mill in Sumatera. It will use the mill's 145,000tonnes/year of surplus bagasse as its feedstock.

5.5.1 Fuel Netback Value

Instead of simply assuming some value for fuel, utilities often find it helpful to calculate what the fuel is worth to the power plant; in other words, what can the generator pay for fuel. This figure is an important one for resource owners when there are alternative uses for the resource, such as pulp or board manufacture. This measure of a fuel's value is called the fuel netback value, and is the *maximum* that a user can pay for fuel given the following data:

- The cost of the capital investment;
- The frequency with which the equipment is used - i.e., dispatch;[17]
- The efficiency of the plant (BTU/kWh); and
- The price at which the power is purchased (or the avoided cost of supply).[18]

In the current analysis, the fuel netback value is especially important since the mill will use purchased fuel for more than half of its export generation. Utility planners like to ensure that the power plant can safely absorb variations in fuel costs should there be a change without a corresponding adjustment in the energy portion of the tariffs.[19] In the current analysis, the base case figures for the power purchase price are $0.075/kWh (a financial buyback price of Rp 149) and $0.0755 and $0.0802/kWh (economic) for Java and Sumatera, respectively. These avoided costs correspond to Rp 150 and Rp 160 per kWh, respectively. In the economic analysis, the average avoided energy charge is $0.0359 per kWh (Rp 71) for Central Java, using the true marginal cost methodology.

When a netback value exceeds the cost of acquiring the fuel, then the mill can justify the investment. However, if the fuel netback value is low or negative, this usually indicates that the capital is too expensive, the power purchase price too low or the boiler too inefficient. Using a range of potential power purchase prices, the team calculated the fuel netback value for each of the prospective plants. Purchase prices for electricity were adjusted to the particulars of a mill's location. Thus in East Java, the PLN optional generation uses gas and coal for baseload generation and gas turbines for peaking. In Lampung the alternative generation source is diesel, slow speed (using HFO) for baseload, and high speed (using ADO) for peaking. The economic and financial model used to analyze the various investment options uses the present value method of calculating fuel netback costs. This technique is more conservative than the method shown above. In general, the netback values were found to be well above the average fuel cost but generally below the value of #6 oil on an energy (BTU) basis. These values are shown in Table 5.4 (next page).

As the Table shows, there is a great variation in calculated fuel netback values. The relatively low value for Sragi is due primarily to the large investment that is required to rehabilitate the mill in general. High netback figures at the two Sumatera plants are due in part to operating costs but the

17 This determines the number of kWh over which each unit of investment is amortized. Infrequent use of the additional capital equipment affects unit capital costs adversely. High unit capital costs in turn reduce the value of any given fuel to a generator.

18 For a discussion of the netback value measure and calculation method used for this analysis, see Appendix E.

19 At the present time Indonesia has neither an energy component nor a fuel adjustment clause in its power tariffs. As a result, potential private power providers will need to be sure that they can absorb the entire amount of a reasonable or expected increase in fuel costs.

TABLE 5.4
FUEL NETBACK VALUES FOR PROPOSED COGENERATION PLANTS

Mill	Netback Values		Average Fuel Costs	
	$/MBTU	Rp/MBTU	$/MBTU	Rp/MBTU
Sragi	$1.88	3,741	$1.48	2,945
Gempolkrep	$2.36	4,696	$1.47	2,925
Gunung Madu	$3.44	6,846	$1.35	2,687
New Mill	$2.66	5,293	$1.75	3,483

NOTE
Fuel Netback values computed using present value techniques. Average fuel cost figures represent a 42:58 mix of bagasse and #6 oil.

smaller investment required at Gunung Madu accounts for most of that mill's high netback value figure. The New Mill shows significantly higher average fuel costs due largely to the higher proportion of oil in the mill's generation mix.

5.6 Financial Analysis

Using the cost information contained in the Tables above, it was possible to calculate the financial returns associated with each of the potential investments. A total of six cases were investigated for each of the mills studied. Using a real discount rate of 10%, the following financial calculations were made:

- Benefit cost ratio;
- Annualized benefit cost ratio;
- Internal rate of return; and
- Displaced oil value.

The internal rate of return and benefit-cost ratios are well known to most readers. The displaced oil value is simply the amount of oil that would have been used had all of the electricity been generated with #6 oil; this measures more broadly the savings in conventional fuels due to the project. The annualized benefit-cost ratio (ABC) measures the annual rate at which the project's returns exceed or fall behind the discount rate (10% for this analysis). The ABC serves as a check on the IRR, which may be unreliable in some cases, and the benefit-cost ratio which merely signifies feasibility but cannot be used to rank or compare investments. Like the netback value, the ABC is a useful counter to other, occasionally problematic, measures of merit. [20]

5.6.1 Results

In the Tables below, the results of the financial and economic analysis are presented. These results

20 The ABC is defined analytically as: $ABC = (PVB/PVC)^{(1/n)} - 1$ where: PVB = Present Value of Benefits and PVC = Present Value of Costs and n = the number of years for which cash flows are calculated

show that the proposed cogeneration investments will be attractive at the avoided cost contract price that is used. The first two Tables show the financial and economic analysis results, respectively. Following the presentation of the base case results are Tables with sensitivity tests of the major parameters: capital costs, fuel costs, and power buyback rates.

Detailed information from the Winrock financial and economic model is presented in Appendix F for readers wishing additional information on key assumptions and parameter values. The financial and economic analysis tables also list average fuel costs, to facilitate comparisons with the calculated netback value for fuel.

TABLE 5.5
FINANCIAL ANALYSIS SUMMARY FOR INDONESIA COGENERATION INVESTMENTS

Measure of Merit	Unit	Sragi	Gempolkrep	Gunung Madu	New Mill
Benefit-Cost Ratio		1.34	1.43	1.61	1.40
Annualized Benefit-Cost Ratio	% above discount rate	1.34%	1.64%	1.74%	1.54%
Internal Rate of Return	%	56.23%	69.92%	96.43%	73.18%
Displaced Oil Value	$M	$1.58	$1.78	$2.41	$4.18
Fuel Netback Value	$/MBTU	$1.88	$2.36	$3.44	$2.66
Average Fuel Cost	$/MBTU	$1.48	$1.47	$1.35	$1.75

As Table 5.5 shows, the financial analysis of the cogeneration investments yields highly positive results. In all of the cases, the various measures of merit are consistent with one another. It is important to note that the large percentage figures in the IRR calculation are belied by the lower values of the ABC measure. IRRs can assume quite high values when compounding positive cash flows since they carry an implicit assumption that the remainder of the positive cash flows can continue to be reinvested at the same rate. As a result, IRR values above 50% are often unreliable. Despite the shortcomings of the IRR measure, the other results confirm that all of the prospective investments are attractive.

As one check on the accuracy of the financial analysis calculation, the study team performed a companion economic analysis of the four proposed projects. Due to differences in how the costs and benefits are computed, an economic analysis looks only at the actual physical flows of resources. As a result, economic analyses tend to be more stable than do financial ones. Table 5.6 below shows the results of the baseline economic analysis of the four projects.

TABLE 5.6
ECONOMIC ANALYSIS SUMMARY FOR INDONESIA COGENERATION INVESTMENTS

Measure of Merit	Unit	Sragi	Gempolkrep	Gunung Madu	New Mill
Benefit-Cost Ratio		1.48	1.58	1.94	1.55
Annualized Benefit-Cost Ratio	% above discount rate	1.80%	2.09%	3.07%	2.01%
Internal Rate of Return	%	29.08%	33.20%	47.43%	28.41%
Displaced Oil Value	$M	$1.93	$2.21	$2.95	$5.07
Fuel Netback Value	$/MBTU	$2.13	$2.64	$4.29	$3.14
Average Fuel Cost	$/MBTU	$1.48	$1.47	$1.35	$1.75

The economic analysis results, computed using avoided costs rather than power purchase prices, show that the projects may indeed be feasible. For three of the four projects, the IRRs, ABCs, and Benefit-Cost ratios cluster, showing the overall similarity of the cost and benefit streams, that is, their rough proportionality. The value of displaced oil differs in this case from the financial analysis since the avoided cost methodology uses both the #6 oil at base and the middle distillates at peak in the computation, hence the higher numbers in each of the cases.

As in the financial analysis, the Gunung Madu mill appears to show better results than the others, due in large measure to the somewhat lower investment costs per kW of installed export capacity and the large off-season capacity. In addition, plants on Sumatera will export to a grid with higher avoided costs than the Java grid to which Sragi and Gempolkrep would export their power. For the Sragi mill the fuel netback value makes the mill more susceptible than the others to changes in power purchase prices or in costs of any sort, especially oil or bagasse. The other plants all have netback values that are high enough to absorb significant variations in the prices received or in costs. Both of the Sumatera plants have fuel netback values that are high enough to operate full year on #6 oil and remain (barely) profitable.

5.6.2 Sensitivity Analysis

Sensitivity analysis can show how vulnerable a project is to changes in the cost of key parameters or variables. The particular parameters that the study team identified for sensitivity tests included the following:

- Power purchase price;
- Crude oil prices;
- Investment costs; and

- Off-season power exports.

The sensitivity analyses show which parameters appear to be the crucial ones and which plants are more susceptible to adverse changes in parameters. In these regards, the study team found that:

1. Sragi was the most sensitive to changes in assumptions. The project can shift from feasible to marginal with modest increases in capital costs and becomes infeasible if the power purchase price falls by 20%;

2. The new mill on Sumatera was the least sensitive;

Tables 5.7 through 5.10 show the complete results of the sensitivity analyses for the four plants.

TABLE 5.7
SENSITIVITY ANALYSIS OF THE SRAGI INVESTMENT

	Oil Price		Capital Cost		Power Purchase Price		No Off-Season Export
	16	22	-20%	+20%	6 cents	9 cents	
Economic							
ERR	26.45%	33.27%	40.03%	21.95%	nc	nc	6.80%
ABC	1.61%	2.08%	2.42%	1.25%	nc	nc	-0.44%
Financial							
IRR	60.25%	50.54%	91.68%	32.63%	18.79%	90.38%	-8.68%
ABC	1.48%	1.14%	2.01%	0.75%	0.29%	2.19%	-1.28%
NBV ($M)	nc	nc	$2.23	$1.52	$1.16	$2.59	-$0.18
AFC ($/MBTU)	$1.36	$1.66	nc	nc	nc	nc	$1.02
Displaced Oil $M	$1.36	$1.88	nc	nc	nc	nc	$1.12

NOTE: NC means no change when parameter was adjusted

TABLE 5.8
SENSITIVITY ANALYSIS OF THE GEMPOLKREP INVESTMENT

	Oil Price		Capital Cost		Power Purchase Price		No Off-Season Export
	16	22	-20%	+20%	6 cents	9 cents	
Economic							
ERR	30.48%	33.27%	45.17%	25.47%	nc	nc	12,49%
ABC	1.93%	2.08%	2.69%	1.56%	nc	nc	0.34%
Financial							
IRR	74.41%	63.55%	108.49%	44.41%	30.48%	107.76%	1.61%
ABC	1.80%	1.42%	2.29%	1.25%	0.61%	2.52%	-0.47%
NBV ($M)	nc	nc	$2.74	$1.99	$1.54	$3.22	$0.13
AFC ($/MBTU)	$1.34	$1.65	nc	nc	nc	nc	$0.93
Displaced Oil $M	$1.54	$2.12	nc	nc	nc	nc	$1.43

NOTE: NC means no change when parameter was adjusted

TABLE 5.9
SENSITIVITY ANALYSIS OF GUNUNG MADU INVESTMENT

	Oil Price		Capital Cost		Power Purchase Price		No Off-Season Export
	16	22	-20%	+20%	6 cents	9 cents	
Economic							
ERR	44.00%	52.97%	63.16%	37.43%	nc	nc	18.19%
ABC	1.89%	2.03%	3.65%	2.55%	nc	nc	1.17%
Financial							
ABC	1.89%	2.03%	3.65%	2.55%	nc	nc	nc
IRR	101.82%	88.81%	141.24%	67.05%	52.68%	139.40%	11.39%
ABC	1.91%	1.53%	2.27%	1.29%	0.90%	2.50%	-0.06%
NBV ($M)	nc	nc	$3.86	$3.01	$2.35	$4.58	$0.25
AFC ($/MBTU)	$1.22	$1.55	nc	nc	nc	nc	$0.51
Displaced Oil $M	$2.11	$2.83	nc	nc	nc	nc	$1.84

NOTE: NC means no change when parameter was adjusted

TABLE 5.10
SENSITIVITY ANALYSIS OF THE NEW MILL INVESTMENT

	Oil Price		Capital Cost		Power Purchase Price		No Off-Season Export
	16	22	-20%	+20%	6 cents	9 cents	
Economic							
ERR	26.93%	30.85%	39.13%	25.06%	nc	nc	9.29%
ABC	1.93%	2.14%	2.62%	1.71%	nc	nc	-0.12%
Financial							
IRR	78.84%	65.09%	94.43%	43.55%	31.04%	105.93%	4.16%
ABC	1.74%	1.28%	1.75%	0.86%	0.53%	2.29%	-0.30%
NBV ($M)	nc	nc	$2.99	$2.34	$1.79	$3.42	$0.05
AFC ($/MBTU)	$1.58	$1.99	nc	nc	nc	nc	$0.10
Displaced Oil $M	$3.66	$4.91	nc	nc	nc	nc	$3.94

NOTE: NC means no change when parameter was adjusted

Chapter 6

CONCLUSIONS AND RECOMMENDATIONS

The results of the case study analyses elaborated in the previous chapters were presented by the Winrock technical team and Perkebunan in a seminar on cogeneration for sugar and power industry officials in Jakarta in late September 1991. The seminar was organized by the Indonesia Sugar Council (Dewan Gula) and sugar companies of Perkebunan, and involved 65 participants from the sugar industry, the Directorate for Electricity and New Energy, PLN, the Ministry of Science and Technology (BPPT), and USAID.

The discussion which followed the technical and economic presentations centered on the lack of an institutional and regulatory framework for power sale arrangements, the need for coordinated sugar industry initiatives, and the need for an Indonesian private power "committee" extending outside the sugar industry to develop guidelines on cogeneration under Indonesia's new private power policy. Significantly, the Sugar Council announced that a sugar industry private power working group was in the process of being established. A number of promising individual project opportunities were also brought to light. A summary of the seminar prepared by the Indonesia Sugar Council is reproduced for reference in Appendix H.

6.1 Technical/Economic Summary

The fundamental conclusion of the foregoing case studies of sugar industry power development is that *new investment in modern electricity cogeneration systems for year round power appears to be a clearly profitable strategy for Indonesian sugar companies.* At three existing sugar factories, representing different production capacities and both private and public ownership, and at a newly planned large private factory, electricity development shows very favorable results across a range of projected energy and economic scenarios. Of the four cases in this study, only the smallest sugar factory examined, Sragi, is not a clearly profitable investment in all scenarios, yet is still attractive in the majority of cases.

A critical conclusion is that *power development appears most promising at larger sugar factories.* This concurs with both historic experience and expectations based on economies of scale. As shown in Table 6.1, the larger sugar factories, namely Gempolkrep, Gunung Madu, and New Factory, have lower unit capital costs than Sragi for their new power systems and tend also to have better economic results.

This leads to another important conclusion and basic tenet of this study: that it is critical to *address power opportunities at an early stage of factory design, expansion planning or facility*

modernization. Importantly for Indonesia, expansion planned for the industry consists largely of factories in the 6000-to-10,000 tonnes of cane per day range (TCD), primarily in the Lampung province of southern Sumatera. These sites will individually offer the opportunity for cost-effective power systems in the 25-to-50 MW capacity range, assuming that optimum electricity production is a key part of sugar factory engineering and design. The installed cost of such plants is estimated at approximately $US 1300 per kilowatt of capacity ("new Factory") compared to traditional sugar factory power facilities, somewhat more than diesel systems but comparable to coal-fired facilities. More important, the cost of power from these facilities, even assuming use of No.6 oil during the off-season, averages less than the team's estimates of PLN's avoided cost of $0.08/kWh in southern Sumatera. These sites are also near to growing power demand centers, where present PLN plans call for installation of new diesel generator systems.

In addition to new factories, plans for *expansion and consolidation of sugar factories, primarily on Java, offer similar opportunites for large cogeneration systems.* Gempolkrep is an example of this

TABLE 6.1
COMPARISON OF BAGASSE POWER RESULTS: INDONESIA CASE STUDIES

Factory:	Sragi	Gempolkrep	Gunung Madu	New Factory
Capital Investment ('000 $US)	22,971	24,019	27,231	56,777
New Generation Capacity (kW)*	13,990	18,260	24,000	41,280
Cap. Investment per kW of New Capacity ($US/kW)	1,642	1,315	1,135	1,375
Approx Net Export, In-Crop (kW)	11,300	12,100	15,300	32,600
Annual Net Export from Bagasse (MWh)	50,272	47,250	58,572	125,025
Displaced Oil Value ($M)	$1.93	$2.21	$2.95	$5.07
Power Generation Cost, Base Case ($/kWh)	0.057	0.054	0.051	0.053
Economic Rate of Return	29.08%	33.2%	47.43%	28.41%
Number of Days Off-Season	135	165	163	163

* This is effective new capacity, based on projected generation using bagasse. New nominal turbo-generator capacity in these cases is 5-10% higher, as indicated in Appendix D.

type of opportunity, where plans call for expansion to 7,500 TCD and possibly up to 10,000 TCD. At least one other Perkebunan factory in East Java is known to be planning a similar expansion. As most of Indonesia's growing power demand is on Java, and sugar factories on Java will generally be able to upgrade their grid connections at lower cost than those in Sumatera, this class of opportunities deserves special attention by company managers and policy makers.

The financial and economic returns for new sugar industry power investments appear very attractive, as presented in Chapter 5. Obtaining these returns will depend on the existence of appropriate power purchase and sale arrangements and on fair prices for energy in the economy. Based on the study team's estimates of new electric capacity avoided costs and on projected values for bagasse in other uses, economic IRRs on the proposed investments of 20-40 percent are predicted for the majority of cases analyzed in this report. The savings to the economy from these four plants in oil which would otherwise be needed for power production totals over $US 14M. It should also be pointed out that the cases use conservative cost estimates as well as economic scenarios which tend to overstate the value of bagasse in other uses. This was done to provide a margin of confidence in the economic and financial analysis results.

6.2 The Policy Environment

The timing for consideration of sugar industry power development in Indonesia is good. Three trends in the economy are creating promising conditions:

- Power demands are growing rapidly with industrial, commercial and income growth spurring a national policy drive to encourage private sector and non-utility investment in the electricity sector.

- Sugar production is growing gradually to meet the consumption demands of a growing and more affluent population; at the same time, sugar self-sufficiency is an important agricultural goal while diversification into associated products is a key economic and industrial goal.

- Perhaps most significant is the over-arching policy of the government to find practical ways to turn more economic activity over to private sector ownership and management as the economy continues to grow.

While there are potential pitfalls in this economic expansion and reform process, Indonesia's growth, efficiency and privatization trends should strongly favor an environment where sugar industry power development can flourish. To date, however, the industrial sector has not received significant attention as a potential supplier of electricity. This is because the scale of Indonesia's projected power demands has focused attention on private development of major new oil, gas and coal fired electric facilities which will generate power for the PLN system.

The sugar industry and other large processing industries merit focused attention in new power development. For example, the industrial sector in particular is being required to provide for its own power needs for new facilities. While the sugar industry already satisfies its own power needs, it is well positioned to maximize this potential for spinoff industries needing power and

steam (e.g., fermentation, paper/pulp). It could also serve new industrial facilities not associated with the sugar industry but which are seeking sources of reasonable cost electricity. And in cases like those analyzed in this report, *the sugar industry could become a firm power producer for the PLN grid or other grid networks* needing year-round supply for a variety of load conditions.

As noted previously, details of Indonesia's private power policy are being established. The successful implementation of sugar industry power projects will require not only strong efforts by sugar companies in determination of the costs and benefits of electric power, but also careful policy coordination on the part of the government. It is with this approach in mind that the following recommendations are put forward.

6.3 Recommendations

This study concludes that the apparent economic and financial benefits deriving from sugar industry electricity development should receive a higher level of policy attention by industry and government managers. Specific recommendations for action initiatives are as follows:

Private Power

In the energy sector, efforts already underway to stimulate private investment in electricity are beginning to examine the potential benefits and impacts from cogeneration. On a test basis, sugar industry power facilities could be encouraged in the near term at promising sites which also demonstrate different aspects of this opportunity, for example, at Gempolkrep (E. Java) and Gunung Madu (S. Sumatera). Potential impact from these facilities could then be assessed and used to help promulgate detailed regulations, develop pricing and contract mechanisms, and incorporate features such as seasonal and time of day rates to optimize the benefits of sugar industry power.

Sugar Industry

The sugar industry has begun to examine energy opportunities on an industry-wide basis. New initiatives such as the recently formed efficiency and power committee established under the Dewan Gula should be given the resources and priority needed to lend momentum to this development effort. Specific measures which could also be taken:

1. In areas of new factory and estate development (e.g., southern Sumatera) develop joint plans for power supply with electricity users and, if appropriate, PLN or local electrical cooperatives.

2. Sugar companies planning rehabilitation of their power facilities or overall capacity expansions conduct detailed studies of upgrading their systems, and seek to develop interconnect and sale plans with PLN or local power users.

3. Through the Dewan Gula, work to raise the industry's profile in policy, industrial and finance circles as a potential supplier of electricity. Seek to establish special facilities which have been identified as areas of need for the industry, especially:

- finance or credit mechanisms for the relatively large investments in power equipment;
- technical training in efficiency and power production.

4. Individual companies begin the process of determining the costs and returns from new investments in power development; companies should also investigate availability of outside technical and financial assistance where needed.

5. Initiate research and development activities on low cost off-season fuels for sugar industry power plants, focusing on cane field residues and other biomass fuel opportunities. Such a program might be best developed on an industry-wide basis, through the Dewan Gula and/or Perkebunan's field research centers, and could access international expertise available through technical assistance programs.

APPENDIX A

A-1: List of Sugar Factories, 1991
A-2: Factories with Expansion Plans
A-3: Plans for New Factories

Table A-1: List of sugar factories in Indonesia, 1991

(Operating Statistics, Excess Bagasse, etc.)

Island/Firm/Factory	Kabupaten	Season	Milling Days [1990]	Actual Milling [TCD]	Boiler Capacity 000 #s/hr	Generator Capacity [kW]	Excess Bagasse [T/Yr]	Remarks
Java:								
PT. Perkebunan XIV								
Gempol	Cirebon	May-Sep	112	750	33	894		
Jatitujuh	Majalengka	May-Aug	95	3363	114	3041	21968	
Jatiwangi	Majalengka	May-Sep	115	948	32	862		
Kadhipanten	Majalengka	May-Oct	147	1081	37	991		
Karang Suwung	Cirebon	May-Oct	157	985	36	957		
Ketanggungan Barat		May-Nov	168	709	95	2534	25203	
Sindang Laut	Cirebon	May-Oct	163	1728	53	1431		
Subang	Subang	May-Sep	122	2729	95	2534	25203	
Tersana Baru	Cirebon	May-Nov	185	1401	84	2241	21721	
				13694	579	15485		
PT. Perkebunan XV-XVI								
Banjaratma	Brebes	May-Oct	150	1403	49	1238		
Ceper Baru	Klaten	May-Nov	197	1363	46	1224	14247	
Cepiring	kendal	May-Oct	180	1464	48	1286		
Colomadu	Karanganyar	May-Nov	185	1050	36	958		
Gondang Baru	Klaten	May-Dec	220	1400	47	1218		
Jatibarang	Brebes	May-Oct	161	1829	59	1581		
Kalibagor	Banyumas	Jun-Sep	100	1017	35	941		
Mojo	Sragen	May-Oct	162	2684	81	2169	25284	
Pangka	Tegal	May-Oct	156	1685	52	1387		
Rendeng	Kudus	Apr-Aug	145	1805	60	1608	18541	
Sragi	Pekalongan	Apr-Nov	203	3060	105	2808	39139	
Sumberharjo	Pemalang	May-Oct	177	1729	59	1583	17350	
Tasikmadu	Karanganyar	May-Nov	210	2971	100	2677	31374	
				23459	777	20678		
PT. Perkebunan XX								
Kanigoro	Madiun	May-Oct	167	1771	55	1478	16296	
Pagottan	Madiun	May-Nov	201	1739	53	1424	16243	
Purwodadi	Magetan	May-Nov	195	1628	60	1599		
Rejosari	Magetan	May-Nov	180	1895	58	1559		
Sudhono	Ngawi	May-Nov	182	2116	73	1951	21507	
Bojonegoro		-						
				9148	299	8011		
PT. Perkebunan XXI-XXII								
Cukir	Jombang	May-Dec	212	1994	64	1710	21671	
Gempolkrep	Mojokerto	May-Dec	196	3580	131	3516	25731	
Jombang Baru	Jombang	May-Nov	211	1611	56	1508	18247	
Kremboong	Sidoarjo	May-Dec	204	1236	38	1008		
Krian	Sidoarjo	May-Dec	219	1087	34	918		

Table A-1: List of sugar factories in Indonesia, 1991
(Operating Statistics, Excess Bagasse, etc.)

Island/Firm/Factory	Kabupaten	Season	Milling Days [1990]	Actual Milling [TCD]	Boiler Capacity 000 #s/hr	Generator Capacity [kW]	Excess Bagasse [T/Yr]	Remarks
Lestari	Nganjuk	May-Nov	184	2538	84	2259	25338	
Merican	Kediri	May-Dec	206	2167	67	1801	24766	
Mojopanggung	Tulungagung	Jun-Nov	162	1669	55	1473		
Ngadirejo	Kediri	Jun-Nov	173	4159	133	3569	37535	
Pesantren Baru	Kediri	May-Dec	230	4043	146	3921	53663	Planned rehab., inc. new blr. & pwr. gen.
Tulangan	Sidoarjo	May-Nov	204	1049	35	938		
Watutulis	Sidoarjo	May-Dec	198	1587	52	1384		
				26719	895	24005		
PT. Perkebunan XXIV-XXV								
Asembagus	Situbondo	May-Nov	169	2070	73	1953	15592	
De Maas	Situbondo	Jun-Oct	144	805	26	703		
Gending	Probolinggo	May-Nov	179	1193	38	1013		
Jatiroto	Lumajang	May-Dec	235	5002	170	4545	61630	Have new blr
Kedawung	Pasuruan	Jun-Nov	175	2699	93	2488	25225	
Olean	Situbondo	Jun-Oct	144	863	31	841		
Pajarakan	Probolinggo	Jun-Nov	142	1062	34	898		
Panji	Situbondo	Jun-Nov	148	1386	54	1438		
Prajekan	Bondowoso	May-Nov	193	2655	84	2241	28971	
Semboro	Jember	Jun-Dec	196	4366	158	4223	49496	Have new blr
Wonolangan	Probolinggo	May-Nov	180	1248	38	1013		
Wringinanom	Situbondo	May-Nov	170	1035	32	852		
				24381	831	22208		
PT. Bapippundip								
Pakis Baru	Peti	May-Oct	175	2324	72	1941	21526	
PT. Tri Gunabina								
Kebon Agung	Malang	May-Oct	159	3410	109	2912	33392	
Trangkil	Pati	Apr-Nov	203	2684	79	2117	27768	
				6094	188	5029		
PT. Madu Baru								
Madujkismo	Bantul	May-Oct	205	2398	92	2205		
PT. Imaco								
Krebat Baru	Malang	May-Nov	166	5867	188	5045	47631	
Rejoagung Baru	Madiun	May-Nov	178	3588	125	3354	41438	
				9455	313	8399		
PT. Pabrik Gula Candi								
Candi	Sidoarjo	May-Nov	186	1163	42	1126		

continued

Table A-1: List of sugar factories in Indonesia, 1991

(Operating Statistics, Excess Bagasse, etc.)

Island/Firm/Factory	Kabupaten	Season	Milling Days [1990]	Actual Milling [TCD]	Boiler Capacity 000 #s/hr	Generator Capacity [kW]	Excess Bagasse [T/Yr]	Remarks
Total Government Estates -- Java				97401	3381	90387		
Total Private Estates -- Java				21455	707	18700		
Total for Java				118106	4088	109087	853696	
Sumatera:								
PT. Perkebunan IX								
Kuala Madu	Binjai	Jan-Jun	161	2759				
Sei Semayang	Deli-Serdang	Jan-Jul	184	2389	109	4859		
				5148	109	4859		
PT Perkebunan XXIV-XXV								
Takalar	Takalar	Jun-Nov	146	2450	85	3810	16511	
				5871	192	8602		
PT. Perkebunan XXXI								
Bunga Mayang	Lampung Utara	May-Nov	192	4384	145	6485	43131	Under const.
Cinta Manis	Ogan Komering Illir	May-Dec	228	3352	133	5919	42755	Specs prepd.
				7737	278	12404		
PT Gunung Madu Plant								
Gunung Madu	Lampung Tengah	Apr-Sep	179	8280	288	12875	145000	
PT. Gula Putih Mataram								
Gula Putih Mataram	Lampung Tengah	Apr-Oct	182	6925	261	11654	25000	est.
							272397	
Sulawesi:								
Perkebunan XX								
Bone	Bone	Jul-Dec	156	2104	58	2600		
Camming	Bone	Jul-Nov	123	2162	75	3357		
				4266	133	5957	0	
Kalimantan:								
PT Perkebunan XXIV-XXV								
Pelaihari	S. Kalimantan	Jun-Nov	142	3420	107	4792	25000	est.
Total Government Estates -- off Java				23021	712	31822		
Total Private Estates -- off Java				15205	549	24529		
Total of Java:				38226	1261	56351	297397	
Total for Indonesia				156332	5349	165438	1151093	

Table A-2: List of sugar factories in Indonesia with expansion plans

Island/Firm/Factory	Kabupaten	Actual Milling [TCD]	Planned expansion [TCD]	Planned capacity [TCD]	Remarks
Java:					
PT. Perkebunan XX					
Pagottan	Madiun	1739	2000	3739	
PT. Perkebunan XXI-XXII					
Gempolkrep	Mojokerto	3580	3000	6580	
Pesantren Baru	Kediri	4043	2000	6043	Planned rehab, inc new blr & pwr generator
PT. Perkebunan XXIV-XXV					
Jatiroto	Lumajang	5002	2000	7002	Have new blr
Prajekan	Bondowoso	2655	1500	4155	
Semboro	Jember	4366	2000	6366	Have new blr
Total for Java		21383	12500	33883	
Sumatera:					
PT. Perkebunan XXI-XXII					
Bunga Mayang	Lampung Utara	4384	4000	8384	Under const.
Cinta Manis	Ogan Komering Illir	3352	2000	5352	Specs prepared
Total off Java:		7737	6000	13737	
Total for Indonesia		29120	18500	47620	

Table A-3: Plans for new sugar factories in Indonesia

Province	Place/Company	Planned Capacity	Remarks
Sulawesi Utara	Paguyaman	8000	Under construction
More than 5 years from now:			
Sumatera Selatan	Baturaja	4000	
Timor Timur	Los Polos	3000	
Sulawesi Tenggara	Tinanggea	4000	
Irian Jaya	Nakias	7500	
Private:			
Lampung	P.T. Indo Lampung	10000	Specs fixed by Hitachi
Lampung	P.T. Indo Lampung	10000	Credit from Spain & Indonesia (local)
Lampung	P.T. Indo Lampung	10000	
Lampung	P.T. Indo Lampung	10000	
Lampung	P.T Gunung Madu	10000	Already have specs
		76500	

APPENDIX B

Cogeneration and the Sugar Factory

B-1: Sugar Factory Practices for Successful Cogeneration

B-2: Selection of Operating Pressure and Temperatures for Cogeneration in Sugar Factories

Appendix B-1: Sugar Factory Practices for Successful Cogeneration

Operating a successful sugar factory cogeneration system need not impose severe constraints on sugar processing operations. In fact, those practices which permit cogeneration to succeed most often can contribute to improved sugar processing performance. The following is a discussion of those operating factors which have a significant effect on cogeneration systems.

A. Cane and Fiber Availability

Energy exported by burning bagasse forms the major revenue stream for cogeneration in sugar plants. Total bagasse available, therefore, is a critical factor in determining total export energy.

A sugar factory consumes energy in much the same way as an electric generating plant. There are static losses, which are needed to keep steam lines hot and equipment rolling in addition to those static losses in the boiler and turbogenerator. In the case of sugar factories, these static losses are a large part of the energy consumed. Since factories tend to be designed for a specific throughput rate, reduction in cane or fiber availability over that planned causes a dramatic and immediate reduction of electrical energy available for sale or use outside the factory (export) since static losses remain the same.

Conversely, an increase in cane or fiber provides a dramatic increase in electric energy available for export.

From the standpoint of maximizing the amount of electric energy available for export when changes in cane or fiber are known in advance, the best approach is to maintain the design fiber milling rate and adjust the processing season length accordingly. Modest increases in fiber milling rate which can be accommodated by existing equipment yield significant increases in energy export, although they may be accompanied by slight reductions in sugar recovery.

B. Processing Time Efficiency

Unavoidable stoppages due to breakdown, lack of cane, or evaporator cleaning are best addressed by stopping the mills, shredders and knives, and cutting back on evaporator boiling in order to minimize static losses during the stoppage. Many short stops, with all equipment kept running, have a greater negative effect on energy export than do fewer longer stops when equipment can be shut down. When processing time efficiency (including interruptions to cane supply) is less than 85%, cogeneration and sale of export energy is most often not advisable.

C. Bagasse Moisture

Bagasse moisture levels affect export energy levels since water must be evaporated from the bagasse by the boiler before it will burn. The energy required to evaporate bagasse moisture is lost to the boiler flue gases.

Typically, cogeneration designs utilize bagasse moistures of between 52% and 46%. Roughly, we may expect the boiler efficiency to increase by 0.5% for every 1% decrease in bagasse moisture. The effect of bagasse moisture on export energy is substantially greater than the reduction of boiler

efficiency alone. Reducing the average bagasse moisture or maintaining the lowest possible bagasse moisture, therefore, not only maximizes energy export but improves sugar recovery as well. In fact, the impact on sugar recovery alone is sufficient to seek and maintain the lowest possible bagasse moistures.

Bagasse moisture fluctuations also affect energy export since sudden increases in moisture cause the boiler pressure to drop, requiring more fuel and air to restore pressure. Properly adjusted boiler controls respond promptly to pressure drops, but generally lag in restoring excess air to the proper levels, therefore, fluctuating bagasse moistures produce a negative effect on boiler fuel requirements greater than the negative effects due to high moisture by itself.

The best operating practice is to keep the mill settings and mill roll surfaces well maintained and avoid intermittent mill stoppages as much as possible.

D. Dilution

The need to evaporate water in the clear sugar juice forms the largest single energy consumer in sugar factory. Non-productive dilution of juice is to be avoided when cogeneration is practiced.

Non-productive dilution of juice can occur in the following stations:

1) Mill
   Leaking water-cooled mill bearings
   Excessive juice pan washdown with water
   Excessive cush-cush screen washing with water
   Excessive imbibition
2) Evaporator Station
   Evaporator supply tank dilution
   Tube leaks at the bottom of the calandria
   Leaking water valves
3) Filter Station
   Excessive washing of filter cake
4) Vacuum Pans
   Excessive remelting and reboiling
   Holding pans on water due to inadequate purging or massecuite storage capacity

E. Evaporator Operation

Syrup brix should be held to the highest possible level since the multiple effect evaporators are more efficient at evaporating water than the single effect vacuum pans.

Evaporator fouling, which not only can reduce throughput, can also reduce the efficiency of operation. Venting of first vapor is a tell-tale sign of this in an evaporator station.

Control systems, if poorly operated and maintained, often lead to reduced evaporator efficiency in much the same way as fouling of the evaporators. Poor operation of the non-condensible vent systems can also affect evaporator efficiency. High last stage exhaust pressure (low vacuum) reduces throughput and increases steam usage at the evaporator station. High cooling water temperatures and condenser performance are common causes of high exhaust pressure.

F. Equipment Design

The design of cogeneration equipment must provide for greater reliability then conventional sugar factory power generation equipment because:

1) It is more expensive and equipment redundancy is generally less.
2) Export energy contracts require reliability comparable to or in excess of utility equipment.
3) The sugar process must not be negatively affected.

Equipment design for cogeneration begins with "system design". System design begins with a thorough understanding of the sugar process and those production criteria and goals established by management.

Modifications to the sugar process equipment to maximize export energy must be employed also with a goal of improving the process at the same time. A steady supply of steam to the pan floor, for example, is of great value in producing high quality sugar.

The tendencies to select equipment based on lowest cost and to design the "system" to the lowest cost equipment should be avoided where it means export energy may not be optimized and reliability may be jeopardized. The use of equipment of proven design and quality is the most prudent approach.

Similarly, choice of equipment based solely on simplicity and lowest cost of operation and maintenance is to be avoided. Steam cycle selection is an example of a choice wherein the selection of operating temperatures and pressures must be a balance between cogeneration efficiency and the ability of the factory to operate and maintain the various systems and equipment specific to those operating pressures and temperatures (see B-2, "Selection of Operating Pressure and Temperatures for Cogeneration in Sugar Factories").

Properly designed and implemented, cogeneration can complement and improve processing operations. It provides an efficient means to control surplus bagasse, a steady and reliable source of steam and electricity, and otherwise untapped additional revenues.

Appendix B-2: Selection of Operating Pressure and Temperatures for Cogeneration in Sugar Factories

1. Thermodynamic Considerations: Steam Pressures, Temperatures, and Cycles

Sugar factory equipment generally requires steam at two pressures: a) high or medium pressure steam (motive) to operate mill turbines, electric power generation turbines, other mechanical drive turbines or steam engines, and various other devices such as steam jet ejectors; and b) low pressure or exhaust steam to heat and boil sugar juices, syrups and molasses.

In a perfectly balanced factory, all motive steam used for turbine or engine drives exhausts to the low pressure steam system and the requirements for turbine and engine drives exactly match the requirements for low pressure steam. No exhaust steam is wasted to the atmosphere and no motive steam is required to supplement the exhaust steam via pressure reducing valves. Although perfectly balanced steam systems seldom exist, many sugar factories closely approximate a perfectly balanced system.

Where factory steam systems are nearly balanced, additional electric energy generation is usually accomplished by raising the steam pressure (and temperature), and installing a turbogenerator which operates at this higher steam pressure and temperature and exhausts to the original high or medium pressure system. Such a cycle is known as a "topping cycle."

Where the factory steam systems are not well balanced, and there is a surplus of motive steam, use of the surplus motive steam is generally accomplished by adding to the capacity of any existing motive steam users or converting electric energy users to steam drives. Installing a steam turbine-driven knife to replace an existing electric motor driven knife, for example, is a method commonly employed where surplus motive steam quantities are small. Where surplus motive steam quantities are large, additional turbogenerator capacity is installed, operating at the existing motive steam pressure and temperature. Such a cycle may be thought of as an "intermediate cycle."

Where there is a surplus of exhaust steam, recovery of the energy lost from vented steam is accomplished by installing condensing capability, either within the process or in a turbogenerator which has the capability of using and condensing the exhaust steam. Recovery of exhaust steam energy is known as a "bottoming cycle."

Recovery of energy from any one or combination of the above means is very efficient from a thermodynamic standpoint and results in small to negligible increases in fuel consumption to produce the additional useful energy.

In cases where the sugar factory produces significant quantities of excess bagasse, such as Gunung Madu and, to a lesser extent, Gempolkrep, the opportunity to produce cogenerated electric energy becomes a choice between a topping or intermediate cycle coupled to a bottoming cycle, depending upon the residual capacity of the existing steam generators (boilers). Only in the cases where a topping cycle is selected, and a higher operating pressure and temperature steam generator is required, is it necessary to consider the selection of higher operating pressures and temperatures.

1.1 Temperature Selection

From a thermodynamic standpoint, the energy recovery from a topping cycle is more dependent on temperature than pressure. The higher the temperature, the higher the cycle efficiency.

Temperatures above 300°C (572°F) require the use of cast steel turbine inlets as opposed to cast iron. Cast steel, however, is commonly available at little or no price penalty, and is generally more forgiving of thermal shocks or external pipe stresses than is cast iron.

Temperatures up to 400°C (752°F) require the use of ordinary carbon steel for piping, tubing, and turbine inlets. Beyond 400°C, alloy steel tubing and piping must be used in superheaters and main steam piping, and alloy steel turbine inlets are required. At about 440°C (825°F), the alloy steel requirements become more stringent and expensive and above about 565°C (1050°F), the alloy steel requirements become extremely stringent and very expensive.

Considerations such as turbogenerator expansion while coming up to temperature and the likelihood of thermal shocking due to process upsets suggest a choice of 400-440°C as the upper limit of temperature selection for sugar factories. Considerations such as cost and maintainability reinforce a selection of 400-440°C (752-825°F) as a practical limit for sugar factory steam temperatures.

1.2 Pressure Selection

If a steam temperature of 400-440°C (752-825°F) is selected as the operating steam temperature, then thermodynamic laws and the typical construction of turbogenerator blading dictate normal pressure limits. There is little thermodynamic efficiency benefit to be gained by pressures exceeding 60 bar (882 psig).

From an economic standpoint, pressures below about 40 bar (588 psig) result in significant increases in cross sectional areas of piping, tubing, and turbine inlets and, hence, increases in material and installation cost. Reducing pressures below 40 bar has minimal effect on wall thickness of piping and tubing.

Therefore, from both thermodynamic and first-cost considerations, steam pressures of 40-60 bar (588-882 psig) are desirable for sugar factory steam generators installed for the purpose of cogeneration.

2. Dealing with Problems of Higher Pressure and Temperature Steam Generators

The problems normally attributed to selecting steam generators of higher pressure and temperature can be classified as purely mechanical or chemical/mechanical.

Purely mechanical problems involve things such as the type and quality of pressurized joints and allowances for expansion due to temperature. These problems, while perhaps not insignificant to a sugar factory, are at least not substantially different than problems associated with lower pressures and temperatures. Quality of welding, however, may be of concern and it is important to have one

or two welders properly qualified to perform maintenance welding on higher pressure and temperature joints. Materials need to be of higher pressure and temperature ratings but are generally readily available.

Chemical/mechanical problems are associated with steam and feedwater quality. Higher pressure and temperature steam generation systems require feedwater and boiler water control of more stringent quality than lower pressure and temperature systems and are less forgiving of upset conditions. Minimizing the potential for upset conditions is a major factor of system design and designers who must recognize the nature and contamination potential of sugar factories. Several critical areas are discussed below.

2.1 Desuperheating Spray Water

Spray water for superheating main steam can be a source of steam turbine fouling. Superheater fouling can also occur in the case where interstage desuperheating is practiced. The use of a spray water condenser which condenses saturated steam from the steam drum for spray water and uses feedwater as a cooling medium has all but eliminated spray water contamination in those factories where such equipment has been installed. The spray water condenser requires no pump, has no moving parts, and requires little maintenance.

2.2 Boiler Water Carryover

Current steam drum separator designs all but eliminate carryover of solids (chemicals) into the superheater except during severe upsets in the feedwater quality. A continuous conductivity sample monitor on drum steam ahead of the steam separator provides ample warning of impending carryover, before damage can occur. This system has proven to be nearly totally successful in preventing major carryover during upset conditions.

2.3 Sudden Load Swings

Sudden load increases which may cause priming of the steam generator and serious carryover problems are best addressed by load and extracting limiting devices on the turbogenerator. These devices are commonly provided on all modern turbogenerators.

2.4 Overfiring of Fuel Oil

In steam generators equipped with supplementary fuel oil firing, the potential for overfiring and damaging water wall tubing exists. The problem can be addressed by burner design which avoids impingement of flame on water wall tubing as well as reducing heat flux by limiting oil firing or by using more vertically layered oil guns. Finally, the control system should be designed to limit or control total fuel input.

2.5 Condensate Quality

Of all the factors important to successful operation of higher pressure and temperature steam generators, none is as important as condensate quality control. Sugar juice in the feedwater system can have immediate and disastrous effects. Some basic rules which have resulted in excellent control on high pressure steam generators are as follows:

i) Recover condensed exhaust steam directly to the deaerating feedwater heater from the first evaporator calandria only. Discard or use for house hot water, all juice heater and vacuum pan condensate. Monitor conductivity ahead of the deaerating heater.

ii) Discard or use for house hot water, all condensate from first vapor since it contains fats and soaps which cause carryover and can not be detected by ordinary means.

iii) Select and monitor for conductivity before using for make up, the condensed vapor from the second to last vapor, in descending order of priority. Do not flash condensates to succeeding evaporator vessels.

iv) Monitor drum water conductivity continuously.

v) In the above recommendations, all conductivity should be continuously monitored using conductivity instruments with adjustable alarms.

vi) Adopt a policy of tripping the steam generator in the event the drum steam conductivity monitor previously mentioned indicates drum steam conductivity beyond acceptable limits.

vii) Utilize continuous chemical addition and blow down but avoid automatic control of blow down and chemical addiction.

3. Controls

Well designed and maintained automatic controls are important regardless of steam pressure and temperature. Due to costs and availability, electronic or "solid state" control systems will be utilized most often with new equipment regardless of steam pressure and temperature. Pneumatic controls while perfectly adequate for sugar factory process and cogeneration control, have become less available and more costly due to the advent of microprocessor based controls. Sugar factories, regardless of the type of steam generating equipment, will ultimately be faced with installing and maintaining electronic controls. Depending on the selected system, these controls can be simpler to operate and maintain than pneumatic controls due to their self-diagnostic capabilities and the ability to remove circuit boards without shutting down.

4. Summary

Of those special requirements for higher pressure and temperature steam generators only condensate quality and feedwater chemical control require significant changes in operating practices or skills. It is safe to say, however, that these special practices and skills lead ultimately to lower operating and maintenance costs and are worth implementing in any steam system.or and serious carryover problems are best addressed by load and extracting limiting devices on the turbogenerator. These devices are commonly provided on all modern turbogenerators.

APPENDIX C

Factory Processing Data

C-1: Trangkil
C-2: Sragi
C-3: Gempolkrep
C-4: Gunung Madu

TABLE C-1
FACTORY PROCESSING DATA — TRANGKIL

	1988	1989	1990	1991 Plan
CANE				
Tons/Yr	484,924	534,951	544,818	528,392
Tons/Day Avg	2,500	2,702	2,780	2,811
Tons/Hr Avg	104.20	112.60	115.80	117.10
Pol (sucrose), % Cane	10.93	10.98	11.03	11.00
Fiber, % Cane (inc. ash)	15.70	14.82	15.28	15.00
Tons Fiber/Hr Avg (calc)			17.69	17.57
Pol Extraction, % (calc)			91.30	
Rated Capacity, Ton/Day	2,800	3,000	3,000	3,000
BAGASSE				
Fiber, % (calc)			45.70	45.60
Pol (sucrose), %	2.91	3.10	2.98	2.90
Moisture, %	49.75	50.09	49.80	50.00
Ash, % (assumed)			1.50	1.50
Tons Bagasse/Yr Gross	165,118	174,364	181,249	174,369
Tons Bagasse/Yr Net (after filter cake) (calc)			178,146	
Tons Bagasse/Hr Net Avg (calc)			37.90	
PROCESSING/DELAYS, DAYS				
Scheduled	208	207	203	196
No Cane (weather, repair, misc.)	2.00	0.50	0.50	0.50
Factory Delay	12.00	8.50	6.50	7.50
Start/stop (clean, hol., etc.)				
Net grinding	194.00	198.00	196.00	188.00
Grinding Time Eff, %	94.20	95.90	96.80	95.70
Total Availability, %	93.20	95.60	96.60	95.90
MIXED JUICE				
Brix (% solids)	15.17	14.84	14.40	14.50
Purity, % (calc)	76.30	75.80	76.50	75.90
Pol, %	11.58	11.25	11.01	11.00
Mixed Juice % of Cane (calc)			91.50	

Note: 1 ton = 1,000 kg = 2,205 pounds

TABLE C-1
FACTORY PROCESSING DATA — TRANGKIL

	1988	1989	1990	1991 Plan
MIXED JUICE (cont'd)				
Tons/Yr (calc)			498,322	
Tons/Hr Avg (calc)			105.93	
CLARIFIED JUICE, SYRUP, AND FILTER CAKE				
Clarified Juice Brix	15.29	14.85	14.71	14.70
Clarified Juice Purity	78.70	78.20	79.00	78.50
Syrup Brix	58.23	60.09	62.77	60.00
Syrup Purity	79.20	78.90	79.50	79.00
Filter Cake, % Cane (calc)				
Filter Cake, Moisture %	69.11	71.13	71.95	70.00
Filter Cake, Pol %	1.23	1.11	1.45	1.00
Filter Cake Tons/ Yr (calc)	16,815	17,977	19,393	18,493
Bagacillo (fiber) % Filter Cake (calc)	16.00	16.00	16.00	16.00
Tons Bagasse/Yr to Filter Cake (calc)			3,103	
C.J. Tons/Hr Avg (calc)			106.30	
STRIKES				
A Massecuite Brix				
A Massecuite Purity				
A Molasses Purity	54.00	67.50	65.90	66.00
B Massecuite Brix				
B Massecuite Purity				
B Molasses Purity			62.80	62.00
C Massecuite Brix				
C Massecuite Purity				
Final (C) Molasses Purity	43.00	45.60	45.30	45.00
Final (C) Molasses Brix				
Remelt Sugar Purity				

Note: 1 ton = 1,000 kg = 2,205 pounds

TABLE C-1
FACTORY PROCESSING DATA — TRANGKIL

	1988	1989	1990	1991 Plan
SUGAR & MOLASSES				
Tons White Sugar	42,014	46,031	46,492	45,355
Pol, %	99.80	99.80	99.80	99.80
Moisture, %				
Tons Cane/Ton Sugar (calc)	16,772	18,067	19,707	18,493
Tons Molasses			11.70	11.70
OTHER				
Fuel Oil, Tons	1,482	1,506	1,402	1,350
* Diesel Fuel, Tons	197	15	28	20
KWH Generated X 10^3	16,220	11,000	11,500	11,500
* KWH Purchased X 10^3		650	800	800
KWH Sold X 10^3	0	0	0	0
Estimated Excess Bagasse, Tons/Yr			20,000	

*Offseason

Note: 1 ton = 1,000 kg = 2,205 pounds

TABLE C-2
FACTORY PROCESSING DATA — SRAGI

	1988	1989	1990	1991 Plan	Used For Study
CANE					
Tons/Yr	676,448	649,701	621,120	620,000	620,000
Tons/Day Avg			3,525		3,584
Tons/Hr Avg			146.90		149.00
Pol (sucrose), % Cane			8.62		8.62
Fiber, % Cane (inc. ash)			15.80		15.80
Tons Fiber/Hr Avg (calc)			23.21		23.60
Pol Extraction, % (calc)			93.20		93.20
Rated Capacity, Ton/Day	4,000	4,000	4,000	4,000	4,000
BAGASSE					
Fiber, % (calc)					46.70
Pol (sucrose), %	1.81	1.79	1.74		1.80
Moisture, %	48.96	50.12	49.17		50.00
Ash, % (assumed)					1.50
Tons Bagasse/Yr Gross	163,902	214,479	210,434		203,236
Tons Bagasse/Yr Net (after filter cake) (calc)			206,896		199,705
Tons Bagasse/Hr Net Avg (calc)			48.92		48.10
PROCESSING/DELAYS, DAYS					
Scheduled	221		205		200
No Cane (weather, repair, misc.)			16.50		15.00
Factory Delay			12.30		12.00
Start/stop (clean, hol., etc.)			0		0
Net grinding			176.20		173.00
Grinding Time Eff, %			93.50		93.50
Total Availability, %			86.00		86.50
MIXED JUICE					
Brix (% solids)			13.14		13.15
Purity, % (calc)			72.50		72.50
Pol, %			9.52		9.52

Note: 1 ton = 1,000 kg = 2,205 pounds

TABLE C-2
FACTORY PROCESSING DATA — SRAGI

	1988	1989	1990	1991 Plan	Used For Study
MIXED JUICE					
Mixed Juice % of Cane (calc)					84.50
Tons/Yr (calc)					523,928
Tons/Hr Avg (calc)					126.20
CLARIFIED JUICE, SYRUP, AND FILTER CAKE					
Clarified Juice Brix			13.04		12.50
Clarified Juice Purity			75.70		75.70
Syrup Brix			58.57		64.00
Syrup Purity			75.90		75.90
Filter Cake, % Cane (calc)			3.56		3.56
Filter Cake, Moisture %			70.35		70.35
Filter Cake, Pol %			1.04		1.04
Filter Cake Tons/ Yr (calc)			22,110		22,070
Bagacillo (fiber) % Filter Cake (calc)			16.00		16.00
Tons Bagasse/Yr to Filter Cake (calc)			3,538		3,531
C.J. Tons/Hr Avg (calc)					127.00
STRIKES					
A Massecuite Brix					92.00
A Massecuite Purity					83.70
A Molasses Purity			64.70		64.00
B Massecuite Brix					94.00
B Massecuite Purity					74.00
B Molasses Purity			58.30		57.50
C Massecuite Brix					99.50
C Massecuite Purity					58.00
Final (C) Molasses Purity			30.35		30.50
Final (C) Molasses Brix					93.00
Remelt Sugar Purity					93.00

Note: 1 ton = 1,000 kg = 2,205 pounds

TABLE C-2
FACTORY PROCESSING DATA — SRAGI

	1988	1989	1990	1991 Plan	Used For Study
SUGAR & MOLASSES					
Tons White Sugar	55,371	50,443	45,278	50,000	50,000
Pol, %			99.70		
Moisture, %					
Tons Molasses	26,844	25,690	25,343	24,000	24,000
Tons Cane/Ton Sugar (calc)			13.70	12.40	12.40
OTHER					
Fuel Oil, Tons					
Diesel Fuel, Tons					
KWH Generated X 10^3					
KWH Purchased X 10^3					
KWH Sold X 10^3					
Estimated Excess Bagasse, Tons/Yr					

Note: 1 ton = 1,000 kg = 2,205 pounds

TABLE C-3
FACTORY PROCESSING DATA — GEMPOLKREP

	1988	1989	1990	1991 Plan	Used For Study
CANE					
Tons/Yr		654,982	626,936	935,685	1,054,440
Tons/Day Avg		4,419	4,408	6,453	7,265
Tons/Hr Avg		184	184	269	303
Pol (sucrose), % Cane		10.36	10.98		10.67
Fiber, % Cane (inc. ash)		15.93	15.59		15.76
Tons Fiber/Hr Avg (calc)		29.33	28.64		47.75
Pol Extraction, % (calc)		94.30	93.90		93.70
Rated Capacity, Ton/Day		4,550	4,550		7,500
BAGASSE					
Fiber, % (calc)		47.28	45.81		45.50
Pol (sucrose), %		1.77	1.94		2.00
Moisture, %		49.45	50.75		51.00
Ash, % (assumed)		1.50	1.50		1.50
Tons Bagasse/Yr Gross		218,230	214,637		353,572
Tons Bagasse/Yr Net (after filter cake) (calc)		206,079	199,261		344,293
Tons Bagasse/Hr Net Avg (calc)		57.94	58.39		98.93
PROCESSING/DELAYS, DAYS					
Scheduled		166	174		170
No Cane (weather, repair, misc.)		1.60	0.20		1.00
Factory Delay		16.20	31.60		24.00
Start/stop (clean, hol., etc.)					
Net grinding		148.20	142.20	145.00	145.00
Grinding Time Eff, %		90.10	81.80		85.80
Total Availability, %		89.30	81.70		85.30
MIXED JUICE					
Brix (% solids)		13.20	13.59		13.40
Purity, % (calc)		76.70	75.60		76.10
Pol, %		10.12	10.27		10.20

Note: 1 ton = 1,000 kg = 2,205 pounds

TABLE C-3
FACTORY PROCESSING DATA — GEMPOLKREP

	1988	1989	1990	1991 Plan	Used For Study
MIXED JUICE					
Mixed Juice % of Cane (calc)		94.30	93.90		93.60
Tons/Yr (calc)		617,696	588,975		987,240
Tons/Hr Avg (calc)		174.00	173.00		283.70
CLARIFIED JUICE, SYRUP, AND FILTER CAKE					
Clarified Juice Brix		12.96	13.77		12.95
Clarified Juice Purity		78.00	78.10		78.00
Syrup Brix		62.67	63.84		64.00
Syrup Purity		78.20	78.30		78.20
Filter Cake, % Cane (calc)		5.50	5.50		5.50
Filter Cake, Moisture %		67.00	64.90		
Filter Cake, Pol %		0.70	0.90		
Filter Cake Tons/ Yr (calc)		36,060	34,760		57,994
Bagacillo (fiber) % Filter Cake (calc)		16.00	16.00		16.00
Tons Bagasse/Yr to Filter Cake (calc)		5,770	5,562		9,279
C.J. Tons/Hr Avg (calc)		174.10	165.20		286.50
STRIKES					
A Massecuite Brix					
A Massecuite Purity					
A Molasses Purity		60.10	61.00		61.00
B Massecuite Brix					
B Massecuite Purity					
B Molasses Purity			58.50		58.00
C Massecuite Brix					
C Massecuite Purity					
Final (C) Molasses Purity		29.00	29.90		30.00
Final (C) Molasses Brix			94.40		94.00
Remelt Sugar Purity		91.96	92.29		92.00

Note: 1 ton = 1,000 kg = 2,205 pounds

TABLE C-3
FACTORY PROCESSING DATA — GEMPOLKREP

	1988	1989	1990	1991 Plan	Used For Study
SUGAR & MOLASSES					
Tons White Sugar		56,362	55,186		90,187
Pol, %		99.70	99.70		99.70
Moisture, %					
Tons Molasses		25,765	26,010		
Tons Cane/Ton Sugar (calc)					11.69
OTHER					
Fuel Oil, Tons			4401.4		
Diesel Fuel, Tons					
KWH Generated X 10^3		12,629,498			
KWH Purchased X 10^3					
KWH Sold X 10^3		0			
Estimated Excess Bagasse, Tons/Yr			25,771		

Note: 1 ton = 1,000 kg = 2,205 pounds

TABLE C-4
FACTORY PROCESSING DATA — GUNUNG MADU

	1988	1989	1990	1991 Plan	Used For Study
CANE					
Tons/Yr	1,274,820	1,479,266	1,482,126		1,500,000
Tons/Day Avg	9,880	9,888	9,472		9,600
Tons/Hr Avg		412.00	394.70		400.00
Pol (sucrose), % Cane		12.86	13.01		13.00
Fiber, % Cane (inc. ash)	14.53	14.60	14.35		14.40
Tons Fiber/Hr Avg (calc)			56.60		57.60
Pol Extraction, % (calc)			94.67		
Rated Capacity, Ton/Day	10,000	10,000	10,000		10,000
BAGASSE					
Fiber, % (calc)		44.93	44.33		44.55
Pol (sucrose), %	1.71	1.63	1.73		1.70
Moisture, %	51.51	51.95	52.19		52.00
Ash, % (assumed)		1.49	1.75		1.75
Tons Bagasse/ Yr Gross		471,299	467,987		466,522
Tons Bagasse/ Yr Net (after filter cake)(calc)			455,121		453,490
Tons Bagasse/Hr Net Avg (calc)			118.50		120.90
PROCESSING/DELAYS, DAYS					
Scheduled	145	170	176		172
No Cane (weather, repair, misc.)		6.46	7.49		7.00
Factory Delay		5.90	3.59		4.80
Start/stop (clean, hol., etc.)		2.70	3.60		4.00
Net grinding		149.60	156.50		156.30
Grinding Time Eff, %		96.20	97.80		97.00
Total Availability, %		88.00	88.90		90.90
MIXED JUICE					
Brix (% solids)		11.94	12.48		12.48
Purity, % (calc)		79.48	81.53		81.53
Pol, %		9.49	10.18		10.18
Mixed Juice % of Cane (calc)			96.30		96.30

Note: 1 ton = 1,000 kg = 2,205 pounds

TABLE C-4
FACTORY PROCESSING DATA — GUNUNG MADU

	1988	1989	1990	1991 Plan	Used For Study
MIXED JUICE					
Tons/Yr (calc)		1,485,896	1,427,080		1,444,500
Tons/Hr avg (calc)		414.00	380.00		385.00
CLARIFIED JUICE, SYRUP, AND FILTER CAKE					
Clarified Juice Brix		11.93	12.33		12.33
Clarified Juice Purity		81.31	82.89		82.89
Syrup Brix		53.35	54.52		64.00
Syrup Purity		81.07	82.65		82.65
Filter Cake, % Cane (calc)		5.46	5.43		5.43
Filter Cake, Moisture %		79.26	78.23		78.50
Filter Cake, Pol %		3.02	3.21		3.20
Filter Cake Tons/Yr (calc)		80,742	80,415		81,450
Bagacillo (fiber) % Filter Cake (calc)		16.00	16.00		16.00
Tons Bagasse/Yr to Filter Cake (calc)			12,866		13,032
C.J. Tons/Hr Avg (calc)			385.00		390.00
STRIKES					
A Massecuite Brix			93.34		93.34
A Massecuite Purity			87.44		87.44
A Molasses Purity			74.60		74.60
B Massecuite Brix			95.50		95.50
B Massecuite Purity			74.97		74.97
B Molasses Purity			62.07		62.07
C Massecuite Brix			99.37		99.37
C Massecuite Purity			61.95		61.95
Final (C) Molasses Purity			36.48		36.48
Final (C) Molasses Brix			94.88		94.88
Remelt Sugar Purity			94.57		94.57

Note: 1 ton = 1,000 kg = 2,205 pounds

TABLE C-4
FACTORY PROCESSING DATA — GUNUNG MADU

	1988	1989	1990	1991 Plan	Used For Study
SUGAR & MOLASSES					
Tons White Sugar	75,538	115,273	119,847		121,359
Pol, %		99.85	99.84		99.84
Moisture, %		0.045	0.040		0.040
Tons Molasses	53,595	56,406	52,240		
Tons Cane/Ton Sugar (calc)		12.83	12.36		12.36
OTHER					
Fuel Oil, Tons		65	137		
Diesel Fuel, Tons					
KWH Generated X 10^3	25,032	25,889	27,237		
KWH Purchased X 10^3			0		
KWH Sold X 10^3			0		
Estimated Excess Bagasse, Tons/Yr	86,000	127,339	125,200		

Note: 1 ton = 1,000 kg = 2,205 pounds

APPENDIX D

Factory Steam Flow Schematics

No.1:	Sragi	Existing Arrangement
No.2:	Sragi	New Arrangement
No.3:	Gempolkrep	Existing Arrangement
No.4:	Gempolkrep	New Arrangement
No.5:	Gunung Madu	Existing Arrangement
No.6:	Gunung Madu	New Arrangement
No.7:	New Factory	

SRAGI FACTORY STEAM FLOW NO. 1 — Existing Arrangement — Nominal — 4,000 TCD

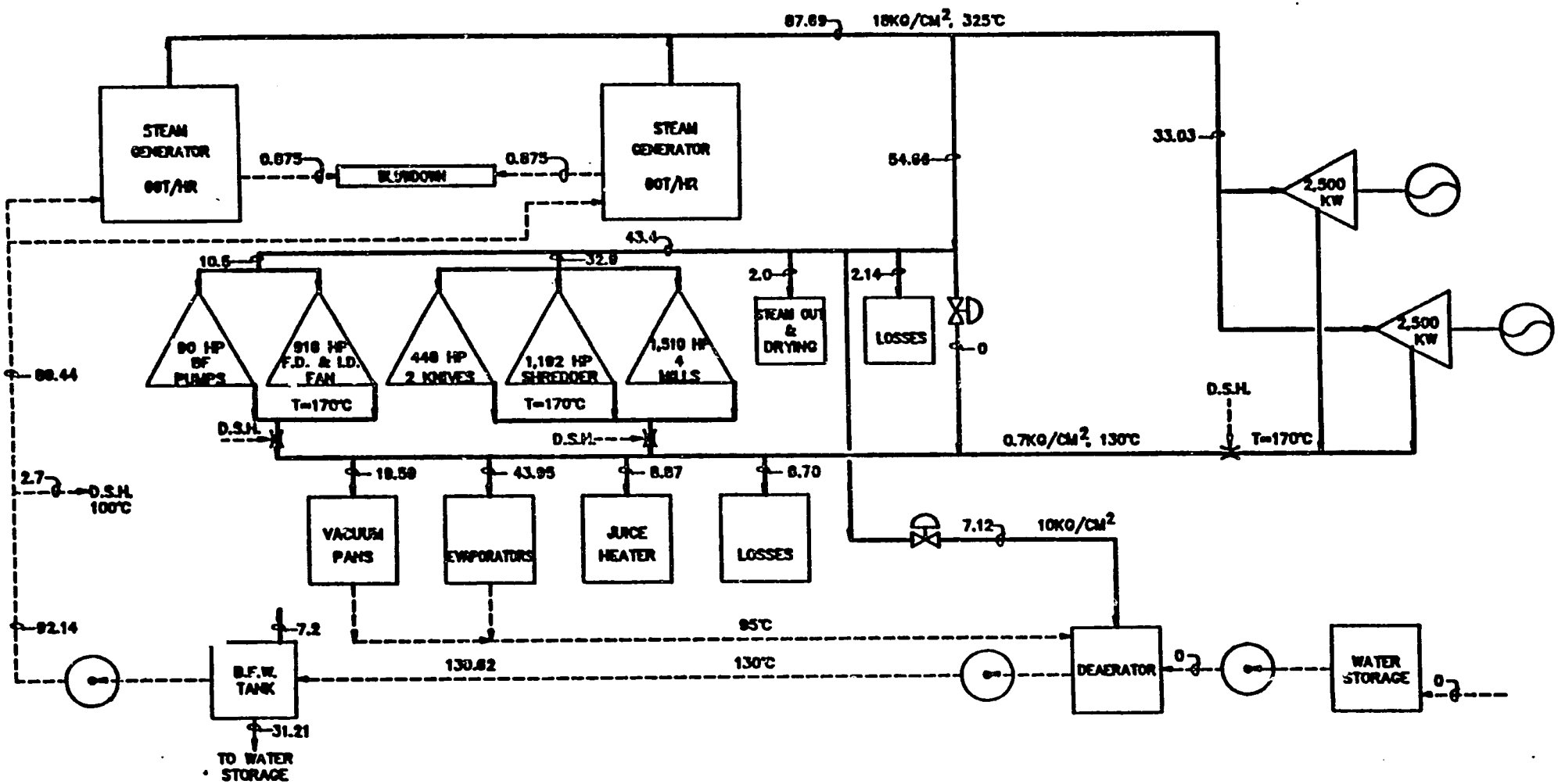

Hualalai Engineering, Inc.
Holualoa, Hawaii

Surplus Bagasse - 6,335 T/Yr
Generate = 2,242 kW
In Plant Use = 2,242 kW
Export = 0 kW

Legend:
- - - - Water, Condensate
——— Steam Flows in T/Hr

SRAGI FACTORY STEAM FLOW NO. 2 — New Arrangement — Nominal — 4,000 TCD

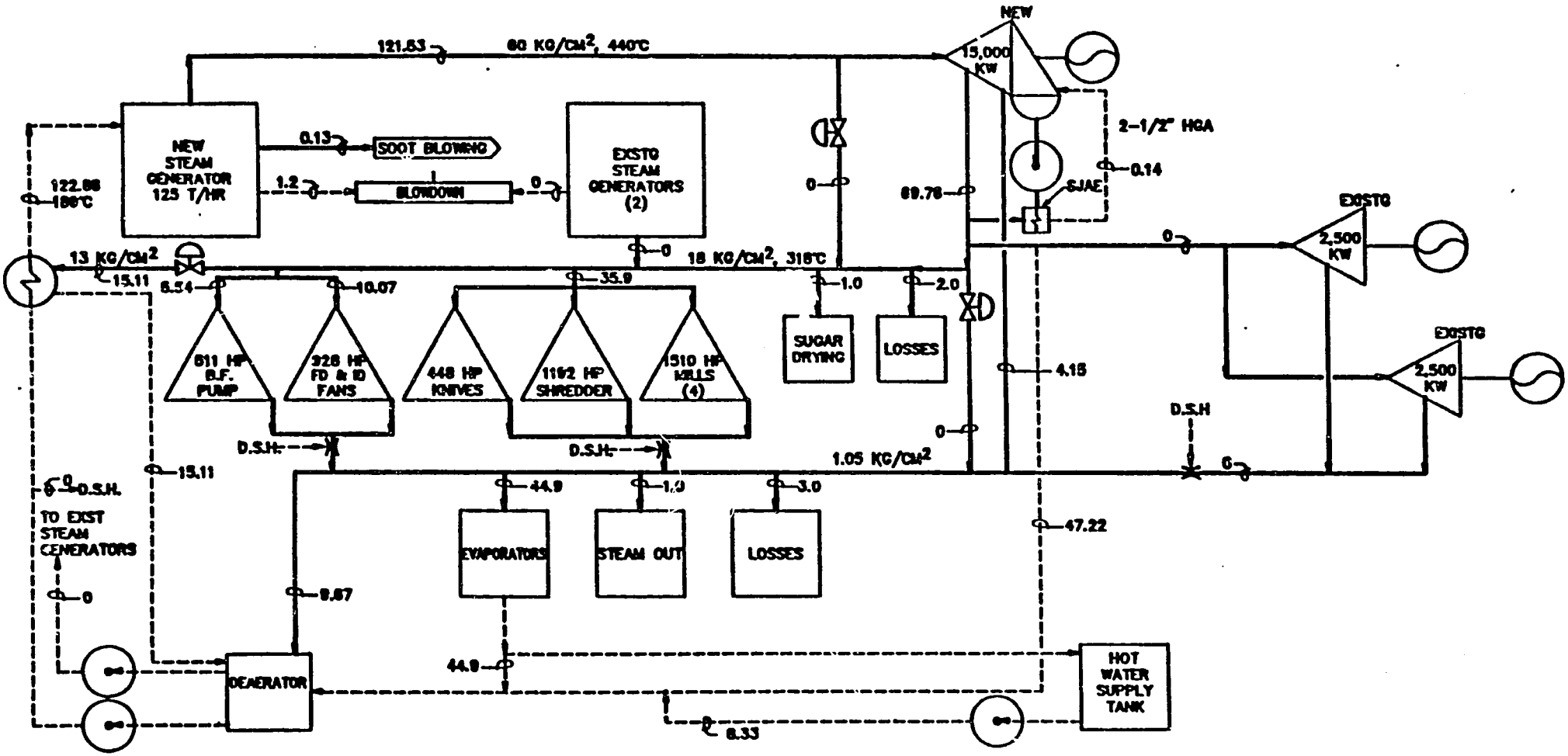

Hualalai Engineering, Inc.
Holualoa, Hawaii

Surplus Bagasse - 0 T
Generate = 13,992 kW
In Plant Use = 2,695 kW
Export = 11,297 kW
Annual Bagasse Export = 50,271,650 kWh/Hr

Legend:
— — — Water, Condensate
——— Steam Flows in T/Hr

GEMPOLKREP FACTORY STEAM FLOW NO. 3 — Existing Arrangement — Nominal — 7,500 TCD

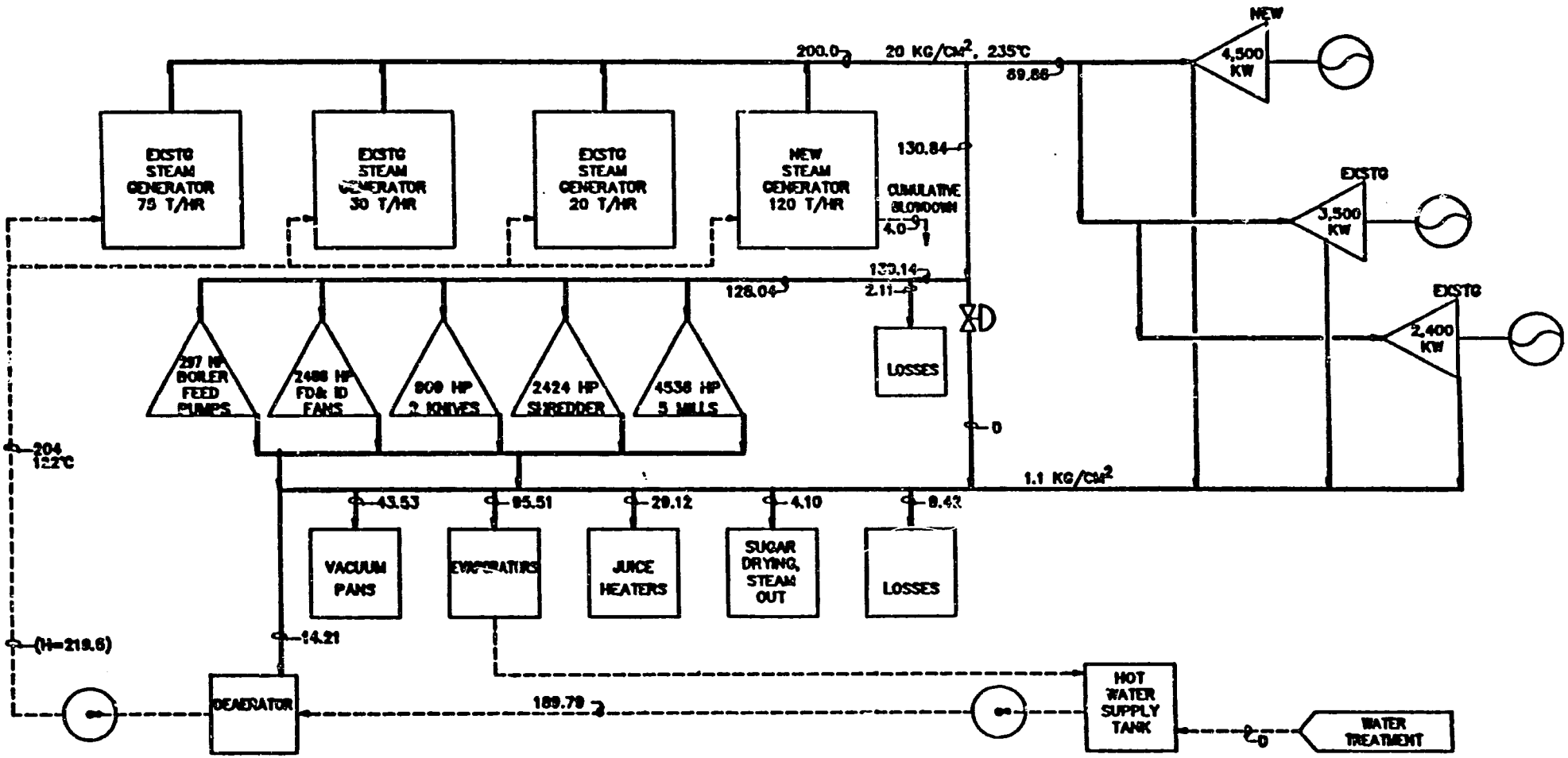

Hualalai Engineering, Inc.
Holualoa, Hawaii

Surplus Bagasse - 0 T/Yr
Generate = 5,454 kW
In Plant Use = 5,424 kW
Export = 0 kW

Legend:
— — — Water, Condensate
——— Steam Flows in T/Hr

GEMPOLKREP FACTORY STEAM FLOW NO. 4 — New Arrangement — Nominal — 7,500 TCD

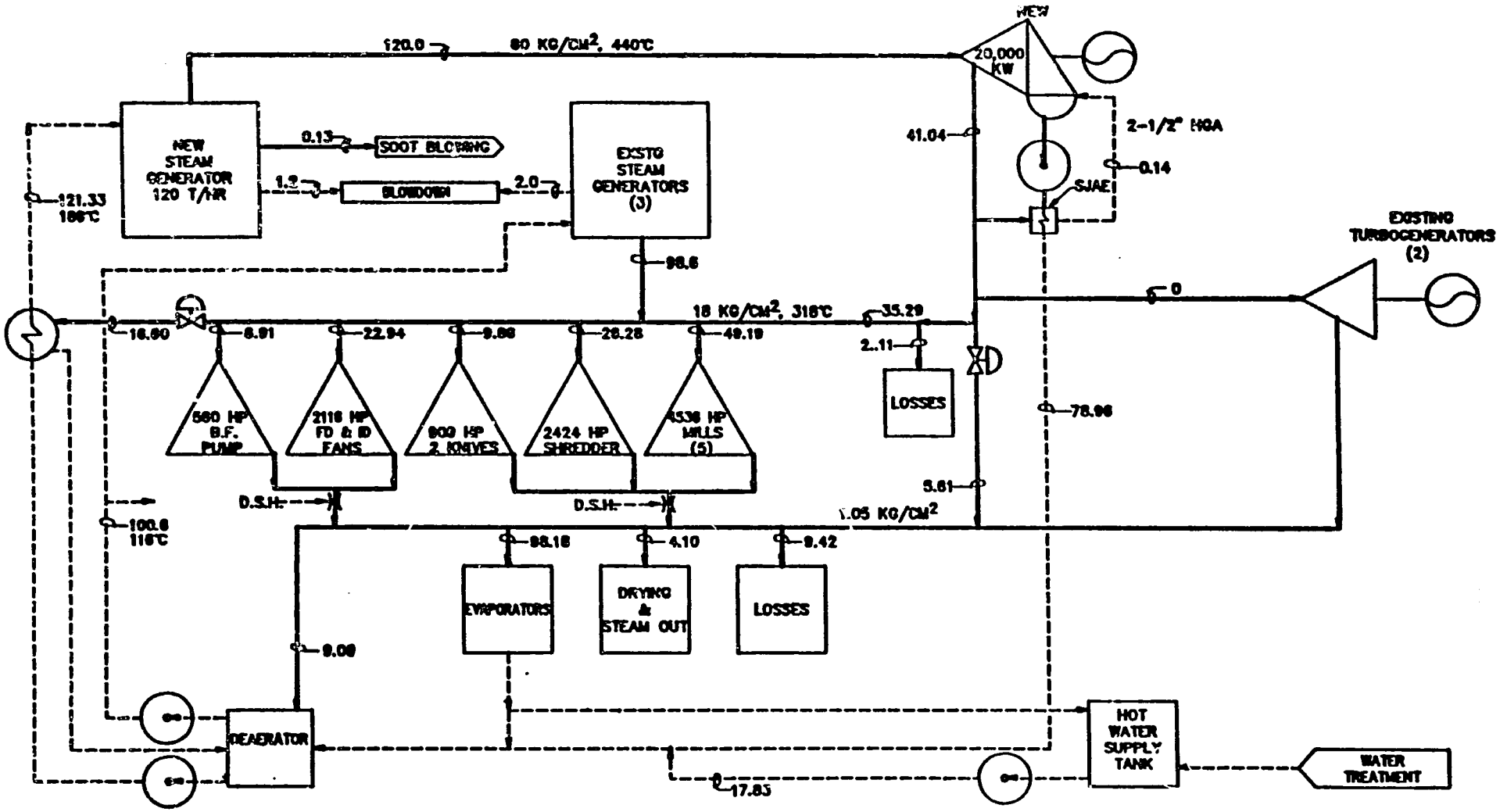

Hualalai Engineering, Inc.
Holualoa, Hawaii

Surplus Bagasse - 0 T
Generate =18,260 kW
In Plant Use = 6,187 kW
Export = 12,073 kW
Annual Bagasse Export = 47,250,000 kW/Yr

Legend:

— — — Water, Condensate

——— Steam Flows in T/Hr

GUNUNG MADU FACTORY STEAM FLOW NO. 5 — Existing Arrangement — Nominal — 10,000 TCD

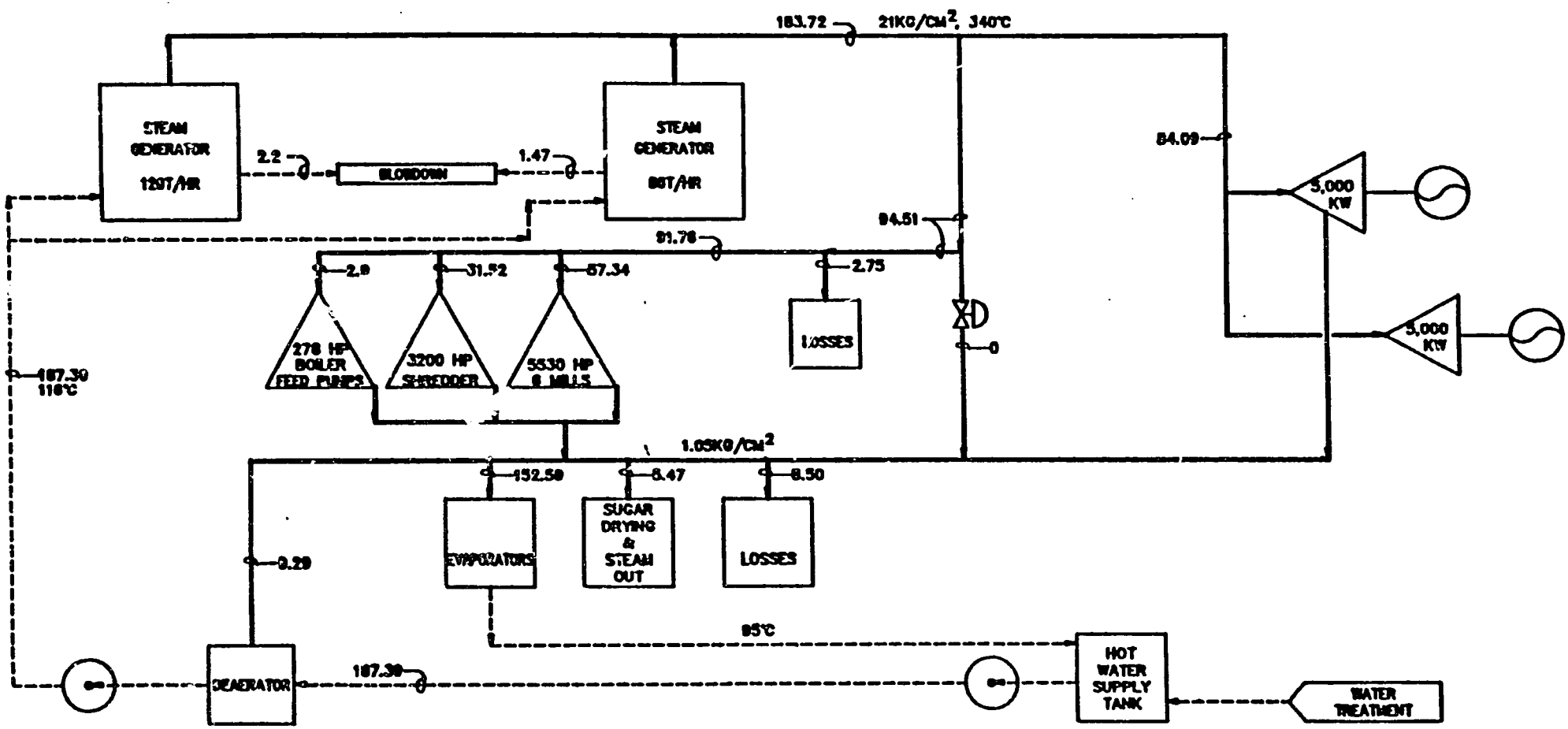

Hualalai Engineering, Inc.
Holualoa, Hawaii

Surplus Bagasse - 125,000 T/Yr
Generate =7,200 kW
In Plant Use = 7,200 kW
Export = 0 kW

Legend:
— — — Water, Condensate
——— Steam Flows in T/Hr

GUNUNG MADU FACTORY STEAM FLOW NO. 6 — New Arrangement — Nominal — 10,000 TCD

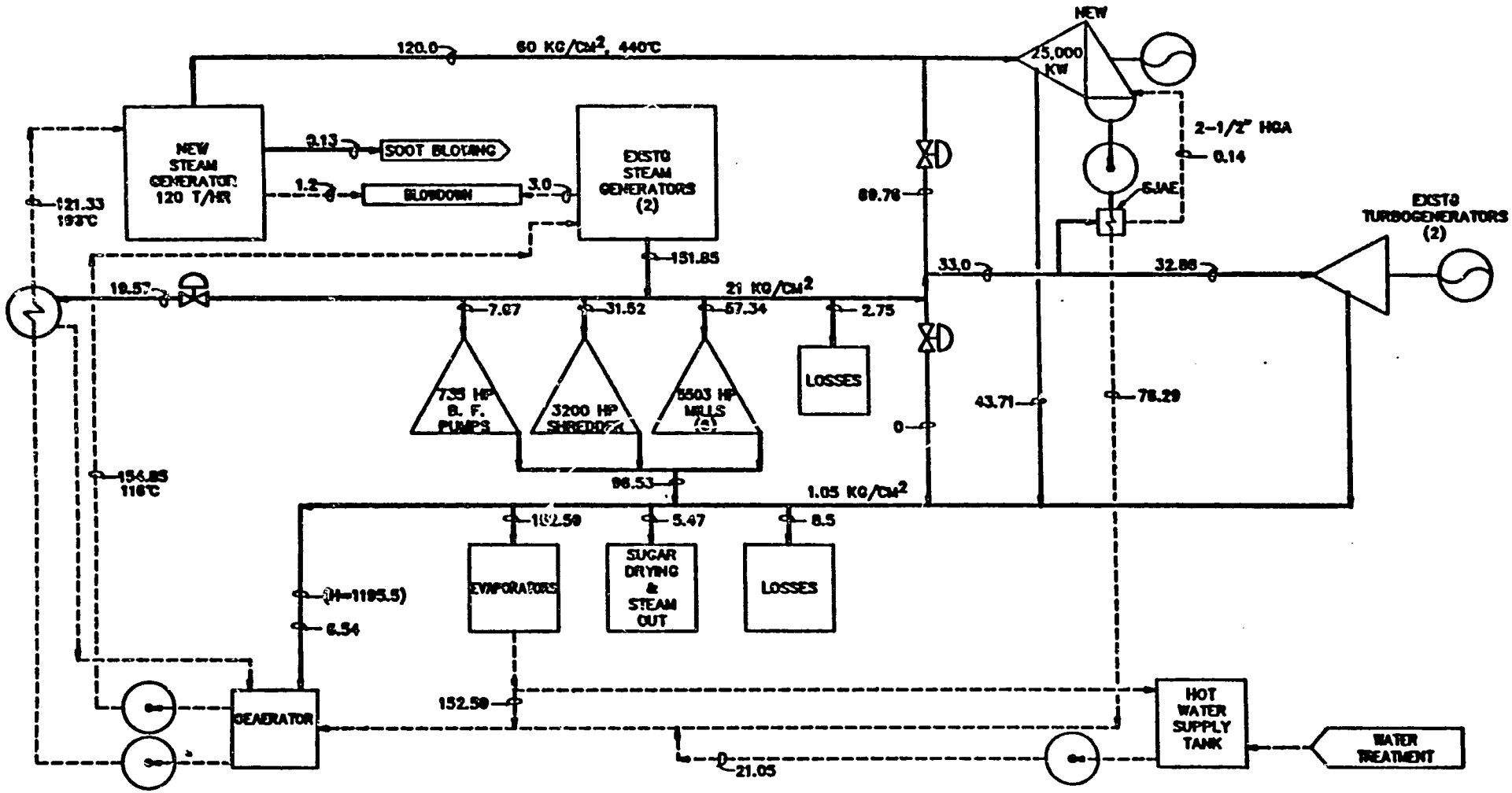

Hualalai Engineering, Inc.
Holualoa, Hawaii

Surplus Bagasse - 0 T
Generate =24,008 kW
In Plant Use = 8,743 kW
Export = 15,265 kW
Annual Bagasse Export = 58,572,000 kWh/Yr

Legend:
— — — Water, Condensate
——— Steam Flows in T/Hr

NEW FACTORY STEAM FLOW NO. 7 — Nominal — 10,000 TCD

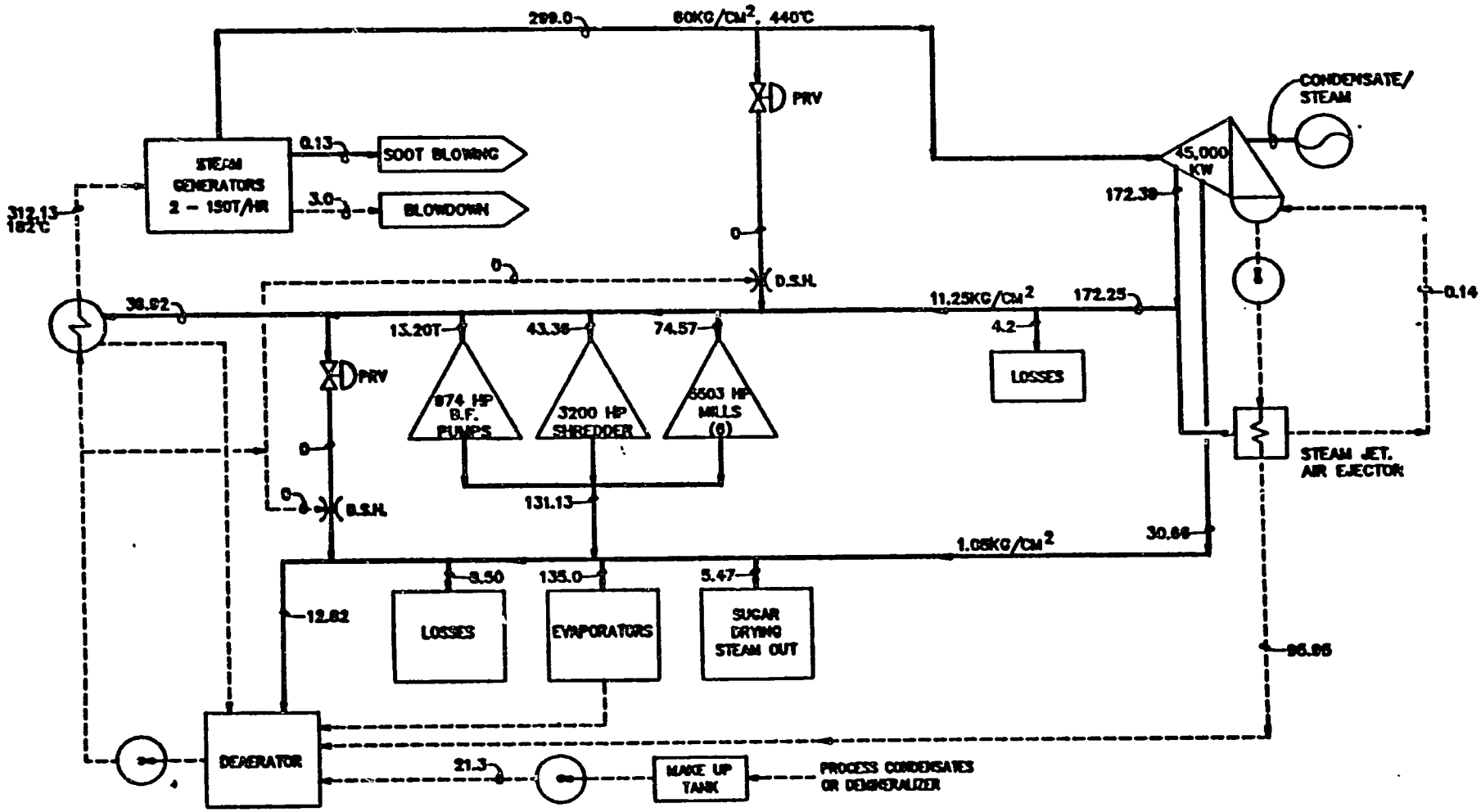

Hualalai Engineering, Inc.
Holualoa, Hawaii

Surplus Bagasse - 0 T
Generate =41,280 kW
In Plant Use = 6,536 kW Process
2,160 Pwr Generation
Export = 32,584 kW
Bagasse Export = 125,025,000 kWh/Yr

Legend:
— — — Water, Condensate
═══ Steam Flows in T/Hr

APPENDIX E

Fuel Netback Value Methodology

Appendix E. Fuel Netback Value Methodology

There are two measures of the netback value that can be calculated from the current sugar industry plant data. The *annual* fuel netback value is calculated as:

$$NB_{fuel} = \text{Electricity Price per kWh} - \frac{\text{(annual capital charge + annual O\&M charge)}}{\text{(kWh generated in year)}}$$

In a similar way, we have calculated the netback value of fuel using present value methods as follows:

$$NB_{fuel} = \frac{\text{Total Receipts - Total non-fuel Costs}}{\text{Total kWh generated}}$$

The present value of this expression is used in Table 5.4 in the text and in Appendix F of this report, Financial Analysis Tables.

In other words, the netback value shows how much a generator can pay for fuel on a per kWh basis. In looking at the economics of a potential power plant investment, the netback value can be compared to the plant's average fuel cost (AFC). If the netback value is above the AFC then the investment will be attractive. If the netback value is below the AFC then the plant is uneconomic.

Once we know the netback value of fuel on an output basis, it is an easy conversion to calculate the value of that fuel on an input (per tonne or per 10^6 BTU) basis. In this report, the convention of expressing fuel netback values in money units per 10^6 BTU terms is used.

For example, take the case of the Sragi plant, Option 1 in Table 5.1. Suppose that the purchase price for 1 kWh = Rp 150. Suppose further that the capital cost of generation, based on dispatch of 7638 hours annually (i.e., 85%) is Rp 62/kWh. Using the first netback formula given above, we get:

$$NB = \text{Rp } 150 - \text{Rp } 62 = \text{Rp } 88,$$

The equivalent result for the present value method is Rp 56/kWh or \$1.88/10^6 BTU. In general, the present value method will give lower netback values than does the current period method. However, the present value method is more reliable over the life of the project.

In other words, using the current period netback value formula, the generator can pay Rp 88 in fuel charges to generate one kWh of electricity. Since the heat rate of the plant is 15,000 BTU/kWh, we calculate that Rp 88 is the value of 15,000 BTU. This figure is equivalent to a value of Rp 5,867 per 10^6 BTU (\$2.95) or \$19.25 (Rp 38,287) per barrel of #6 oil equivalent, comfortably above current HFO prices in world markets but just barely above the current domestic price for #6 oil in Indonesia. Translating this figure to the purchase of bagasse fuel or, equivalently, its value as fuel in the cogeneration plant boiler, the plant can afford to pay up to Rp 51,802 for a tonne of bagasse (\$26) at an energy value of 8.3 x 10^6 BTU per tonne of bagasse. Since this value far exceeds the price that the mill might get from a board mill for its bagasse, power generation is an

attractive end use for the bagasse in this case. Given that bagasse makes up 42% of the plant's fuel at an acquisition cost of $8/tonne or less, this netback value gives the plant a comfortable margin to absorb changes in fuel oil costs or other factors.

The capital cost items identified in Tables 5.2 and 5.3 can affect the fuel netback value. If the investment cost goes up, then the fuel netback value will fall correspondingly. Conversely, if investment costs go down, then the price that a mill can pay for fuel will rise. In a similar way, variations in the heat rate will affect the fuel netback value. If the heat rate rises, i.e., the plant becomes less efficient thermally, then the fuel netback value will fall. Contrarily, a fall in the heat rate will increase efficiency and hence, the value of the fuel. For example, using the figures in Tables 5.2 and 5.3, a 20% increase in capital and investment costs will lead to a change in the fuel netback value as follows:

$$\begin{aligned} NB &= Rp\ 150 - Rp\ 72 \\ &= Rp\ 78 \end{aligned}$$

With such a netback value per kWh (15,000 BTU), the value of 10^6 BTU falls to Rp 5,200 ($2.61). This figure is equivalent to Rp 43,160 per tonne of bagasse ($21.90) or $16.98/barrel of #6 oil equivalent (Rp 33,800). Using the present value method, the netback value falls from $1.88 to $1.52 for 10^6 BTU. Whereas the current period method registers a drop of 12% in the fuel netback value for a 20% rise in capital costs, the present value method shows a drop of 19% for the same change in capital expenditures.

Such netback value calculations point out the sensitivity of the plant economics to the distorted domestic pricing system in Indonesia. Should capital costs escalate, then the current period fuel netback value will be less than the current price for #6 oil. Only projects featuring a significant proportion of less expensive fuels can be considered economic under such conditions. This is instructive in a general sense, since the fuel netback value computed just above is almost identical to the avoided energy cost for the Java grid (using the true marginal cost method).[1]

1 In other words, domestic pricing distortions encourage investment in alternative (non-oil) generating sources. This is indeed one of the principles of Indonesia's energy policy. However, the costs of such a policy can be bearable as long as the fuel oil that is exported due to lack of domestic demand can fetch a price equivalent to the netback value of the fuel at home. It does not appear that such a condition can be met in the current oil markets.

APPENDIX F

Financial Analysis Tables

Summary Financial Analysis

		Full Avoided Costs	
Present Value of Benefits	($/M)	$51.97	
Present Value of Costs	($/M)	$38.80	
Benefit Cost Ratio:		1.34	
Internal Rate of Return		56.23%	31.14% (after tax ROI)
Annualized Benefit Cost Ratio		1.34%	
Net Present Value	($/M)	$13.17	
Fuel Netback Value	$/MBTU	$1.83	
Average Fuel Cost	$/MBTU	$1.48	
Displaced Oil Value/Y	($/M)	$1.58	

Note: Dollar figures are in $ Millions

Summary Economic Analysis

		Project Costs and Benefits
Present Value of Benefits	($/M)	$52.10
Present Value of Costs	($/M)	$35.19
Benefit Cost Ratio:		1.48
Internal Rate of Return		29.08%
Annualized Benefit Cost Ratio		1.80%
Net Present Value	($/M)	$16.90
Fuel Netback Value	$/MBTU	$2.13
Displaced Oil Value/Y	($/M)	$1.93

Note: Dollar figures are in $ Millions

Starting Values for IRR Calculations

	Financial	Economic
Full Avoided Costs	25%	10%
After Tax IRR	10%	NA

Financing Parameters

	Dividend or Lending Rate	% of Total Capital	Term (years)	Grace Period
Equity	0.00%	20.00%		
Loan 1 Concessional	8.50%	20.00%	15	0
Loan 2 State/National Bank	11.00%	60.00%	15	0
Loan 3 Private Bank	19.50%	0.00%	8	0

Taxes and Depreciation

Income tax rate = 0%

Depreciation period = 15 years

Inflation Rates

Item	Rate	Item	Rate
Skilled Labor	0%	Oil	0%
Factory Labor	0%	Coal	0%
Farm Labor	0%	Bagasse	0%
Other Labor	0%	Wood	0%
O&M Costs	0%	Sugar cult.	0%
Management Fees	0%	Sugar Price	0%
Capacity payments	0%	Cane Trash	0%
Energy Payments	0%		

Labor

			Wage	# hours/day	# workers	Days/y	Shadow	Total
Skilled		(US$/hour)	$5.00	10	6	250	1	75000
Unskilled								
	Factory	(US$/hour)	$1.00	10	24	250	1	60000
	Field	(US$/hour)	$0.25	10	24	150	1	9000
Other		(US$/hour)	$2.50	10	12	75	1	22500

Other Costs & Prices

O&M rate as % of capital costs = 3.50%

management fee in $/kWh = 0.0015

spare parts 2.19 (year 10) 3.28 (year 11)

Sugar Cost per tonne of cane $0

Sugar Price in $/tonne $205

Sregt: 11 MW Electricity Export During Milling Season (New Boiler and TG)

Technical Parameters for the Mill

	In Crop	Out of Crop	Total
Size of Mill Export (MW)	11.297	13.5	12.51
Annual Hours of Operation	3420	4218	7,638
Kwh/year output	3.86E+07	5.69E+07	9.56E+07
Availability Factor (%)	95%	95%	
Operation (days)	150	185	
Peak hours (% of day)	33.33%		
Additional Cane Throughput (tonnes)	0		
Pol Percent on Cane	15%		

13 MW Export During Off-Season Using HFO

Investment Parameters

Equipment	(US$M)	$20.01
Installation	(US$M)	$0.00
Project Development	(US$M)	$1.00
Total Investment (w/o duty)	(US$M)	$21.01
Import Duty	(US$M)	$3.34
Total Investment (w/ duty)	(US$M)	$24.35

Project Cost Parameters

% Imported (equipment) =	67%
Import Duty (%) =	25%
Proj. Dev. Cost (%)=	5%
Installation Cost (%) =	0%
Foreign Exchange Shadow Price =	1
Discount Rate =	10.00%

Fuels

			Market Price	Annual Consumption	Energy Content	Units per kWh
Bagasse (inside)		(US$/tonne)	$8	100,000 T	8.83E+06 BTU/Tonne	0.00167
Bagasse (outside)		(US$/tonne)	$12	1,500 T	8.83E+06 BTU/Tonne	0.00167
Coal	(CIF)	(US$/tonne)	$60.00	0 T	2.53E+07 BTU/Tonne	0.00058
Cane Trash		(US$/tonne)	$20.00	0 T	1.33E+07 BTU/Tonne	0.00111
Wood		(US$/tonne)	$20.00	0 T	1.65E+07 BTU/Tonne	0.00089
Fuel Oil	(CIF)	(US$/bbl)	$14.34	103,645 bbl	6.50E+06 BTU/bbl	0.00204
Crude Oil			$18.50			

Power Purchase Prices($/kWh)

			Financial	Economic
Season 1	Capital	Peak	0.03	0.06
180 days		Offpeak	0.03	0.03
	Energy	Peak	0.05	0.06
		Offpeak	0.03	0.03
Season 2	Capital	Peak	0.06	0.06
185 days		Offpeak	0.03	0.03
	Energy	Peak	0.05	0.05
		Offpeak	0.03	0.03

Average Purchase Price ($/kWh

0.075	(fin)	0.54
0.07599	(econ)	

Avoided Energy Costs ($/kWh)

0.035	(fin)
0.036384	(econ)

Avoided Capital Charges

		Investment per kWh ($)	Utilization Rate (%)	Avoided Cost ($/kWh)	Installation & Other Capital Equipment
Season 1	Peak	$750	25%	0.06	1.25
	Offpeak	$1,250	75%	0.03	1.25
Season 2	Peak	$750	25%	0.06	1.25
	Offpeak	$1,250	75%	0.03	1.25

Avoided Energy Charges

		Hydro	Diesel	Coal	Gas Turbine	Oil Steam	Gas
Season 1	Peak	0%	25%	0%	75%	0%	0%
	Offpeak	0%	0%	100%	0%	0%	0%
Season 2	Peak	25%	0%	0%	75%	0%	0%
	Offpeak	0%	0%	0%	0%	100%	0%

94

Gunung Madu: 15.3 MW Electricity Export During Milling Season (New Boiler and TG)

Summary Financial Analysis		Full Avoided Costs	
Present Value of Benefits	($/M)	$80.16	
Present Value of Costs	($/M)	$49.73	
Benefit Cost Ratio:		1.61	
Internal Rate of Return		96.43%	50.69% (after tax ROI)
Annualized Benefit Cost Ratio		1.74%	
Net Present Value	($/M)	$30.44	
Fuel Netback Value	$/MBTU	$3.44	
Average Fuel Cost	$/MBTU	$1.35	
Displaced Oil Value/Y	($/M)	$2.41	

Note: Dollar figures are in $ Millions

Summary Economic Analysis		Project Costs and Benefits
Present Value of Benefits	($/M)	$88.54
Present Value of Costs	($/M)	$45.55
Benefit Cost Ratio:		1.94
Internal Rate of Return		47.43%
Annualized Benefit Cost Ratio		3.07%
Net Present Value	($/M)	$42.99
Fuel Netback Value	$/MBTU	$4.29
Displaced Oil Value/Y	($/M)	$2.95

Note: Dollar figures are in $ Millions

Starting Values for IRR Calculations

	Financial	Economic
Full Avoided Costs	-10%	10%
After Tax IRR	10%	NA

23.5 MW Export During Off-Season Using HFO

Financing Parameters

	Dividend or Lending Rate	% of Total Capital	Term (years)	Grace Period
Equity	0.00%	20.00%		
Loan 1 Concessional	8.50%	20.00%	15	0
Loan 2 State/National Bank	11.00%	60.00%	15	0
Loan 3 Private Bank	19.50%	0.00%	8	0

Taxes and Depreciation

Income tax rate = 25%

Depreciation period = 15 years

Inflation Rates

Item	Rate	Item	Rate
Skilled Labor	0%	Oil	0%
Factory Labor	0%	Coal	0%
Farm Labor	0%	Bagasse	0%
Other Labor	0%	Wood	0%
O&M Costs	0%	Sugar cult.	0%
Management Fees	0%	Sugar Price	0%
Capacity payments	0%	Cane Trash	0%
Energy Payments	0%		

Labor

			Wage	# hours/day	# workers	Days/y	Shadow	Total
Skilled		(US$/hour)	$5.00	10	6	250	1	75000
Unskilled								
	Factory	(US$/hour)	$1.00	10	30	350	1	105000
	Field	(US$/hour)	$0.25	10	30	150	1	11250
Other		(US$/hour)	$2.50	10	12	75	1	22500

Other Costs & Prices

O&M rate as % of capital costs = 3.50%

management fee in $/kWh = 0.0015

spare parts 2.60 (year 10) 3.91 (year 11)

Sugar Cost per tonne of cane $0

Sugar Price in $/tonne $205

Gunung Madu: 15.3 MW Electricity Export During Milling Season (New Boiler and TG)

Technical Parameters for the Mill

	In Crop	Out of Crop	Total
Size of Mill Export (MW)	15.265	23.5	19.32
Annual Hours of Operation	3876	3762	7,638
Kwh/year output	5.92E+07	8.84E+07	1.48E+08
Availability Factor (%)	95%	95%	
Operation (days)	170	165	
Peak hours (% of day)	33.33%		
Additional Cane Throughput (tonnes)	0		
Pol Percent on Cane	15%		

23.5 MW Export During Off-Season Using HFO

Investment Parameters

Equipment	(US$M)	$46.66
Installation	(US$M)	$1.64
Project Development	(US$M)	$2.42
Total Investment (w/o duty)	(US$M)	$50.92
Import Duty	(US$M)	$5.62
Total Investment (w/ duty)	(US$M)	$56.54

Project Cost Parameters

% Imported (equipment) =	80%
Import Duty (%) =	15%
Proj. Dev. Cost (%)=	5%
Installation Cost (%) =	4%
Foreign Exchange Shadow Price =	1
Discount Rate =	10.00%

Fuels

			Market Price	Annual Consumption		Energy Content		Units per kWh
Bagasse (inside)		(US$/tonne)	$8	205,000	T	8.83E+06	BTU/Tonne	0.00167
Bagasse (outside)		(US$/tonne)	$10	1,500	T	8.83E+06	BTU/Tonne	0.00167
Coal	(CIF)	(US$/tonne)	$60.00	0	T	2.53E+07	BTU/Tonne	0.00058
Cane Trash		(US$/tonne)	$20.00	0	T	1.33E+07	BTU/Tonne	0.00111
Wood		(US$/tonne)	$20.00	0	T	1.65E+07	BTU/Tonne	0.00089
Fuel Oil	(CIF)	(US$/bbl)	$15.59	366,347	bbl	6.50E+06	BTU/bbl	0.00204
Crude Oil			$18.50					

Power Purchase Prices($/kWh)

			Financial	Economic
Season 1	Capital	Peak	0.06	0.056281583
150 days		Offpeak	0.03	0.037521055
	Energy	Peak	0.05	0.082321875
		Offpeak	0.03	0.02722323
Season 2	Capital	Peak	0.06	0.056281583
185 days		Offpeak	0.03	0.037521055
	Energy	Peak	0.05	0.082321875
		Offpeak	0.03	0.027577885

Average Purchase Price ($/kWh

0.075	(fin)	0.43
0.082828	(econ)	

Avoided Energy Costs ($/kWh)

0.036	(fin)
0.039053	(econ)

Avoided Capital Charges

		Investment per kWh ($)	Utilization Rate (%)	Avoided Cost ($/kWh)	Installation & Other Capital Equipment
Season 1	Peak	$750	25%	0.06	1.25
	Offpeak	$1,500	75%	0.04	1.25
Season 2	Peak	$750	25%	0.06	1.25
	Offpeak	$1,500	75%	0.04	1.25

Avoided Energy Charges

		Hydro	Diesel	Coal	Gas Turbine	Oil Steam	Gas
Season 1	Peak	0%	25%	0%	75%	0%	0%
	Offpeak	0%	0%	100%	0%	0%	0%
Season 2	Peak	0%	25%	0%	75%	0%	0%
	Offpeak	0%	0%	0%	0%	100%	0%

APPENDIX G

Summary of Seminar on Potential for Electric Power Development in Sugar Industry

Dewan Gula Indonesia, 26 September 1991

SEMINAR
ON THE POTENTIAL FOR ELECTRIC POWER DEVELOPMENT IN THE SUGAR INDUSTRY *

Jakarta, 25 September 1991

Summary

I. In order to be able to implement the project of electric power development in the sugar industry, we are facing the following constraints:

1. **Financial Resources**
   a. Large amount of capital is needed by a project in the application of modern technology.
   b. Generally, such capital was possessed only by big companies or could also be obtained from banking credit, but the capital cost was high.
   c. Long payback period of invested capital is needed due to the long time needed for education and training program.

2. **Regulation & Legal Aspects**
   The regulations and legal aspects concerning the electric power export through PLN grid from the private companies is included in "Undang-undang No. 15/85", but another aspects excluded such as detail procedure, technical requirement, timing, pricing etc. are necessary to be known by the project.

3. **Coordination Among Related Institution**
   The consistency of interrelationship among related institutions in the implementation of a project will take a long time to get mutual benefit for both sides.

4. **Human Resources**
   a. Qualified and skilled manpower is needed to operate new equipment in modern technology.
   b. Long enough time is needed to accomplish education and training program of the transfer of new technology as well as to adapt its application.

* **Retyped from the original, from Dewan Gula Indonesia, Jakarta, September 26, 1991**

II. **Necessary measures to be taken in preparing the project as follows:**

1. **Human Resources**
   a. Education and training program is necessary to be prepared early for this project.
   b. Discipline specialization is needed to guarantee the perfect operation of new equipment.
   c. The adequate and well prepared manpower will enable the transfer of technology.

2. **Financial Resources**
   a. Capital could be obtained from credit with its reasonable interest, or by means of cooperation with either domestic or foreign companies in joint venture basis.
   b. A study on the possibility of that purpose is necessary to be done immediately.

3. **Regulations, Legal Aspects and Coordination**
   A good coordination among Department of Agriculture, Indonesian Sugar Research Institute, Directorate General of Mining and Energy, PLN and BPPT (the Agency for the Assessment and Application of Technology) should be created to get the mutual benefit among those related institutions in conjunction with regulations and legal aspects.

4. **Feasibility Study**
   a. A deep, comprehensive and objective study is necessary to be carried out immediately to prepare a feasibility of a project that is new in either technology or its business.
   b. In this case, USAID is expected to be able to provide assistance fund for companies which are interested in the project of electric power cogeneration systems.

5. **Suggestion**
   To handle the follow up measures of this seminar, it is suggested to assign a team involving the representatives of related institutions of the national level.

6. **Efficiency of Sugar Factory**
   Sugar Factories which are interested in this project should be prepared by running its factories most efficiently. The parameter related to the efficiency is steam usage in kg steam/kg cane. This parameter must be less than 0.5 kg/kg cane.

KPB Perkebunan

KPB stands for Kantor Pemasaran Bersama, Perkebunan, which is the Joint Marketing Office of Perkebunan, the Indonesian state plantation company. The Joint Marketing Office was established by the Board of Directors of PT. Perkebunan I-XXXI (plantation companies I through XXXI) shortened PTP I-XXXI.

KPB Perkebunan has the following missions:
- to market all commodities produceed by the state-owned plantation companies in accordance with economic principles to maximize revenues.
- to administer all commodities ready for sale.
- to collect all necessary information, to analyze them, and to distribute them to PTP's in order to develop the market.
- to execute all transactions directly or through collaboration with overseas offices.
- to arrange shipments and collect payment accordingly.
- to settle all claims from customers.
- to make all promotion activities domestically or in foreign countries.
- to prepare end-of-year reports about eh carrying-out of its mission and make workplans for the coming year.
- to prepare market analyses and estimates for the coming year.

KPB Perkebunan has branches and outpost offices, especially in locations near to producing areas from where shipment is to be made. Sales are centralized in Jakarta, but shipping and documentation is arranged by the branch offices where the commodity originates.

Branch Offices:

1. KPB Perkebunan
   Jl. Balai Kota No. 8
   Medan 20111

2. KPB Perkebunan
   Prince Building Lt. 7-8
   Jl. Jendral Sudiman No. 3-4
   Jakarta

3. KPB Perkebunan
   Jl. Fakhrudin No. 14
   Jakarta

4. KPB Perkebunan
   Jl. Sikatan No. 1
   Surabaya 60175

Sub-branch Offices:

1. KPB Perkebunan
   Jl. Gadjah Mada No. 100
   Semarang

2. KPB Perkebunan
   Jl. Masjid Raya No. 94
   Ujung Pandang

All financial transactions are channeled through state-owned commercial banks like Bank Bumi Daya, Bank Dagang Negara, Bank Exim, etc.

KPB Perkebunan also works in cooperation with overseas offices which are established in the same way and by the same companies. All transactions with KPB could be channeled without extra cost to clients through:

1. Messrs. Indoham
   28-30 Ferdinanstras
   2000 Hamburg Germany
   Tel: (41) 327534
   Fax: (41) 2163702

2. PTP Commodities Ltd.
   260 Fifth Ave., Suite 401
   New York, NY 10001
   Tel: (212) 488-8336, 37, 39, 40
   Fax: (212) 488-8291

These two companies can also act as claim settlers. KPB has relationships with shipping companies, warehouses, and forwarders. KPB also has data and information exchange agreements with major international market organizations.

KPB Perkebunan makes all efforts to necessary to develop best added-value to the commodities by developing down-stream industry and encouraging investors to cooperate in joint ventures, counter trade, counter purchase, longterm supply contracts, etc.

All interested parties are requested to contact:

Jl. Taman Cut Mutiah No. 11 Jakarta 10330
P.O. Box 4401/JKT - Indonesia
Tel: (021) 337136, 3106685, 3101497, 334282, 336919
Fax: (021) 335091, 336919 Telex. 46336 APBP IA

The Office of Energy and Infrastructure

The Agency for International Development's Office of Energy and Infrastructure plays an increasingly important role in providing innovative approaches to solving the continuing energy crisis in developing countries. Three problems drive the Office's assistance programs: high rates of energy use and economic growth accompanied by a lack of energy, especially power in rural areas; severe financial problems, including a lack of investment capital, especially in the electricity sector; and growing energy-related environmental threats, including global climate change, acid rain, and urban air pollution.

To address these problems, the Office of Energy and Infrastructure leverages financial resources of multilateral development banks such as The World Bank and the InterAmerican Development Bank, the private sector, and bilateral donors to increase energy efficiency and expand energy supplies, enhance the role of private power, and implement novel approaches through research, adaption, and innovation. These approaches include improving power sector investment planning ("lease-cost" planning) and encouraging the application of cleaner technologies that use both conventional fossil fuels and renewable energy sources. Promotion of greater private sector participation in the power sector and a wide-ranging training program also help to build the institutional infrastructure necessary to sustain cost-effective, reliable, and environmentally-sound energy systems integral to broad-based economic growth.

Much of the Office's strategic focus has anticipated and supports recently-enacted congressional legislation directing the Office and A.I.D. to undertake a "Global Warming Initiative" to mitigate the increasing contribution of key developing countries to greenhouse gas emissions. This strategy includes expanding least-cost planning activities to incorporate additional countries and environmental concerns, increasing support for feasibility studies in renewable and cleaner fossil energy technologies that focus on site-specific commercial applications, launching a multilateral global energy efficiency initiative, and improving the training of host country nationals and overseas A.I.D. staff in areas of energy that can help to reduce expected global warming and other environmental problems.

To pursue these activities, the Office of Energy and Infrastructure implements the following six projects: (1) The Energy Policy Development and Conservation Project (EPDAC); (2) The Biomass Energy Systems and Technology Project (BEST); (3) The Renewable Energy Applications and Training Project (REAT); (4) The Private Sector Energy Development Project (PSED); (5) The Energy Training Project (ETP); and (6) The Energy Technology Innovation Project (ETIP).

The Office of Energy and Infrastructure helps set energy policy direction for the Agency, making its projects available to meet generic needs (such as training), and responding to short-term needs of A.I.D.'s field offices in assisted countries.

Further information regarding the Office of Energy and Infrastructure projects and activities is available in our Program Plan, which can be requested by contacting:

Office of Energy and Infrastructure
Bureau for Research and Development
U.S. Agency for International Development
Room 508, SA-18
Washington, D.C. 20523-1810
Tel: (703) 875-4052

104