PN-ABN-281

Report No. 19
December 1992

SUMMARY OF ACHIEVEMENTS

STORAGE TECHNOLOGY DEVELOPMENT

AND TRANSFER

KSU
KANSAS STATE UNIVERSITY

Food and Feed Grains Institute
Manhattan, Kansas 66506-2202
USA

Food Security Management Project (391-0491)
Agricultural Sector Support Project (391-0492)
Storage Technology Development and Transfer
Contract No. 391-0491-C-00-6080-00

SUMMARY OF ACHIEVEMENTS

STORAGE TECHNOLOGY DEVELOPMENT AND TRANSFER

FINAL REPORT

Food and Feed Grains Institute
Kansas State University
Manhattan, Kansas, USA

December 1992

SUMMARY OF
STORAGE TECHNOLOGY DEVELOPMENT AND TRANSFER
ACHIEVEMENTS

Introduction

The Storage Technology Development and Transfer (STDT) component of the Food Security Management and Agricultural Sector Support Projects added many new dimensions in response to the changing conditions. The major events reshaping STDT were (1) abandonment of the partial provisioning system; (2) addition of a long-term advisor for storage and training; (3) opening of the Lahore Training Center (LTC); (4) inclusion of bulk storage in the storage rehabilitation program; (5) the STDT involvement in wheat policy issues; (6) response of the private sector to the STDT program; and (7) the STDT institutionalization efforts. The new dimensions did not significantly alter the goals and purpose of the STDT project, but broadened the width and depth of activities undertaken. This pictorial report highlights the major STDT activities. Annexes I to IV present activities in pictorial form as well as "mini case studies" of the STDT spin-offs and impacts on the private sector and international grain storage research.

Goals of STDT

The goal of the STDT program was to improve the capacity of the Government of Pakistan (GOP) to manage the national food security program effectively and efficiently. The activities enhanced the capabilities of the public-sector agencies and concerned private-sector firms to store food grains over extended periods of time.

The purpose of the program was (1) to strengthen the capability of the Pakistan Agricultural Research Council (PARC) and cooperating institutions for testing and developing improved grain storage technology appropriate to local conditions, (2) to organize and implement training programs for the rapid extension of improved technology to all levels of managerial and operational personnel in the grain handling and storage sector, and (3) to provide training to enhance the skills of researchers and those personnel for training programs.

Strengthening the Research Capability

One of the more successful elements of STDT has been the close cooperation between STDT and PARC's Grain Storage Research Laboratory (GSRL) in Karachi. STDT initially provided laboratory equipment and technical support to GSRL, including external training. STDT provided funding and logistical support for the GSRL field activities.

GSRL supervised three harvest time surveys of wheat quality and subsequently developed recommendations for revised grades and standards for wheat. GSRL conducted two large-scale experiments in bagged grain storage involving 8,880 tons of wheat stored under four treatments for up to one year. A third experiment in Sindh was canceled due to unrest in the test area. To analyze the data, STDT provided the services of a senior statistician and logistical support

for two years. This person was stationed at GSRL and did considerable staff training in addition to his analytical responsibilities.

When STDT/Lahore Training Center (LTC) became fully operational in 1989, GSRL stationed two researchers and an assistant at LTC as part of the center's staff. This close cooperation was extremely productive for research and training. The PARC personnel will continue their research and training in cooperation with the Punjab Food Department and the University of Agriculture, Faisalabad (UAF). Some accomplishments were:

- Developed and implemented improved storage methodologies for bagged grains. The most notable advance is the PEPF (polyethylene enclosure-phosphine fumigation) technique. PEPF was originally developed by GSRL for on-farm storage. It was expanded to the godown level with the cooperation of STDT and the Natural Resources Institute of Great Britain. See Annex I.

- Pioneered new insect control procedures for bagged grain warehouses.

- Developed and implemented insect control methods for four types of bulk storage facilities.

- Developed and implemented a low-cost method for determining insect resistance to phosphine fumigation.

- Researched insect distribution in silos.

- Developed and implemented a program of insect control for the private sector.

- Prepared nine research reports and seven journal articles.

Organization and Implementation of Training Programs for the Rapid Extension of Improved Technology

LTC was authorized by the United States Agency for International Development (USAID) after a contract amendment in 1988. The essential purpose of the amendment was to exchange short-term TDY personnel for a long-term advisor in grain storage who would also serve as the STDT training director. The position was ably filled by Dr. Ulysses Acasio. Dr. Acasio, in turn, selected Shamsher Haider Khan of the Pakistan Agricultural Storage and Services Corporation (PASSCO) as the training center's administrator and training assistant.

Two unique features of this arrangement led to its ultimate success. First was the use of "master trainers." Master trainers are operating personnel of cooperating food departments and PASSCO. These persons were carefully selected and intensively trained by the long-term advisor.

Thereafter, the master trainers were held responsible for training in their respective organizations. The master trainers operated in multi-organizational teams. This teamwork greatly facilitated communication among the food departments and PASSCO that has carried over into day-to-day operations.

The training programs developed an appreciation of how storage deficiencies in the surplus areas creates problems and increases costs in the deficit areas. It is now possible to resolve intra- and inter-organization distribution and storage problems by direct informal contacts with counterparts in the same and other organizations.

The second unique feature is that all training and research was conducted under actual operating conditions. The transfer of classroom knowledge to the field was thus immediate, practical, and adapted to the working environment.

During the life of the STDT project, master trainers have risen in levels of authority and responsibility in their respective institutions. This facilitates the implementation of improved storage technology. New master trainers are being recruited, and 26 were given six-weeks of external training in September and November 1992. The master trainer program is to be continued under the auspices of the Punjab Food Department. A new domestic master trainer class is to be started in January 1993.

Two of the master trainers are from the private sector. One was the general manager of welfare trust farms operated by the Pakistan military. The technology transferred is used in the farm's central grain storage and rice mill plus on-farm storage for over 600 tenant farmers. He has since become manager of a large corporate farm. The other private-sector master trainer is the general manager of a large rice milling complex. He passed the training on to paddy suppliers and mill employees.

The Pakistan military is also interested in bulk handling activities. Military personnel have attended the STDT bulk handling demonstrations and seminars. STDT and PASSCO personnel were invited to present lectures at the Army Supply School, Nowshera, and briefed top ranking officers on bulk handling potentials. The military will send candidates to academic training programs at UAF. The Pakistan military provides grain products to approximately three million active and retired military personnel and their dependents through their commissary system.

A comprehensive training manual was developed in 1989. Of necessity, it presented some materials from external sources. The manual was revised in December 1992, to include illustrations and recommendations from the STDT research and bulk handling experience. One hundred copies of the revised manual were distributed in Pakistan in the last month of the project. The revised manual will serve as a reference and textbook on grain storage and handling in Pakistan.

Tables 1 and 2 list domestic and external training conducted by and for STDT. Some specific training activities included:

- Operations and management seminars for flour millers;

- Demonstrations and workshops in handling of grains in bulk;

- Seminars and workshops on issues of price, loss, and quality;

- Workshops in fumigation techniques for bulk and bagged grain storage and cotton, rice, and perishable exports;

- Workshops in operation and maintenance of bulk grain handling equipment and bulk grain storage facilities;

- Two semester non-degree course in agricultural marketing and policy analysis course for the Economics Wing, Ministry of Food and Agriculture (MINFA) in cooperation with the Quaid-I-Azim University;

- Research in loss, price, and quality (including wheat grades and standards) issues; and

- External training in research methodology, bulk storage management, and grain grading and standards.

Private-Sector Assistance

One of the more rewarding aspects of STDT has been interaction with the private sector. Informal contacts with the private sector began with the STDT investigations of wheat quality and the impact of the *No Loss Policy* on flour milling. Shortly after the arrival of Dr. Ulysses Acasio as the long-term advisor in Lahore, he was requested by the U.S. Agricultural Attache to assist a feed mill in the installation and operation a bulk handling system purchased in the United States. From that time, there was no looking back as the private sector sought his advice on flour, feed, and rice storage and milling problems. Annex II shows a case study of interaction with a private-sector firm over the life of STDT.

Organized programs for the private sector began with a request from the Kansas State University/Food and Feed Grains Institute (KSU/FFGI) Director Charles Deyoe to the U.S. Wheat Council to provide technical training for the flour milling industry in Pakistan. The first series of very successful technical seminars began in 1989 and were repeated in 1990. From these meetings, influential flour millers began discussions of building a grain milling institute in Pakistan. Flour millers were also active in the 1989 Conference on Wheat Handling and Storage Policies.

STDT assisted four private-sector flour mills in designing and installing a bulk handling capacity totaling 27,000 tons. Other work with flour mills included guidance and assistance on fumigation and vertebrate pest control. Bulk wheat delivery to flour mills was initiated in 1990. Mills were equipped to receive in bulk using the STDT portable equipment. In 1991, the program was expanded to include cleaning and sale of bulk wheat at a premium price to cover cleaning costs and weight losses as required under the *No Loss Policy*. This marked the first time that wheat was sold by the public sector on a quality differential basis. The flour mills have been so receptive to the program that the plan is to be greatly expanded in 1993.

Demonstrations of bulk handling and delivery to flour mills were well attended and received by the milling industry. These demonstrations prompted one prominent industry figure to offer facilities and support for a milling school.

STDT actively pursued this idea within the public and private sector, but was unable to generate enough additional support to make a private-sector institute a reality in the time available.

A request by the Punjab Food Department prompted UAF to develop academic courses in grain storage and management. STDT assisted in preparing course outlines and providing reference materials and laboratory equipment. The first training course began in October 1992, with 14 persons enrolled, including eight from the private sector.

USAID is providing additional grain milling, processing, and quality control equipment valued at US$144,000 to UAF. STDT has transferred additional equipment to UAF teaching and research. The grain milling school is being created in an academic setting with the full cooperation of the private sector.

STDT provided specific assistance to the private sector in:

- Design of wheat storage facilities;
- Design and installation of bulk wheat handling equipment;
- Engineering design and economic analysis of a grain import terminal for Port Qasim;
- Conversion of wheat storage facilities from bag to bulk;
- Conversion of unused edible oil tanks to bulk wheat storage;
- Developing a complete bulk handling system from combine to rice mill in the private sector. This system is capable of delivering cleaned wheat to flour mills;
- Modernization of rice mills;
- Design and fabrication of a continuous flow dryer system for the rice industry;
- Assisted a private-sector firm in obtaining a license for domestic manufacture of fumigants;
- Installation and operation of U.S.-made bulk handling systems in the feed milling industry; and
- Developed a production cost, product mix, and spreadsheet model for use as a marketing and planning tool for a rice mill.

Training for the Private Sector in:

- Wheat policy issues;
- Fumigation procedures of stored grain and export commodities;

- Control of vertebrate pests in flour mills;
- Operation and maintenance of milling equipment, quality control, and energy conservation; and
- Grain grading.

Bulk Wheat Handling and Storage Program

The bulk handling research had its roots in a diverse number of activities which converged in 1988 and 1989. The initial FFGI contract called for a review of previous studies and recommendations on the future of bulk handling in Pakistan. The review, completed in October 1986, stated that all past feasibility studies did not present a conclusive case for or against bulk handling. However, the report noted that there was no reason why bulk handling should not work and its adoption in Pakistan was inevitable. The report recommended that a only a full-scale pilot project could test the physical and economic feasibility of bulk handling under current conditions.

The STDT contract was amended to provide for the development of a bulk handling pilot project feasibility study. The study, completed in October 1987, was presented to GOP and USAID officials in November 1987. The pilot project as proposed was rejected by GOP as being "too big and too complex." MINFA requested that the scope be scaled down. After several alternatives were explored, the bulk handling activity was initiated as a research project to link existing bulk handling and storage facilities. USAID provided approximately US$900,000 for portable bulk handling equipment that arrived in 1990.

In collaboration with the Punjab Food Department, PASSCO, and the Pakistan National Flour Millers Association (private sector), the following bulk handling activities were undertaken:

- Introduced and gained acceptance for the concept of bulk handling and storage chain from producer to flour mill;
- Developed and implemented applicable and cost-effective mechanical handling systems;
- Assisted a private-sector firm in the development of specialized manufacturing of grain handling and grain drying equipment;
- Assisted in the design of a Port Qasim Grain Terminal and economic analysis;
- Built and modified bulk handling equipment to suit local conditions;
- Developed and implemented the conversion of bagged storage facilities to bulk grain storage facilities;
- Provided technical analysis, designs, and equipment specifications for correcting deficiencies in existing bulk grain storage facilities;

- Introduced the concept of cleaning stored products before sale and the use of price premiums for a cleaned product; and

- Initiated a dialogue between the public- and private-sector wheat industry that had not taken place in the previous decade.

Provide Training to Enhance the Skills of Researchers and Related Personnel for Training Programs.

An extensive program of internal and external training was made available under the STDT and USAID supporting activities. Table 2 lists external training related to STDT. Formal and informal training was made possible by interaction with STDT TDY experts, participation in regular and special training activities, and individual guidance and counseling by the chief-of-party and long-term advisor.

STDT also cooperated with other donor programs and international organizations to develop training opportunities for researchers and management personnel (see below).

Interaction With Other Donor Agencies and Projects

An unexpected bonus for STDT was the ability to meet and cooperate with many other projects, donor organizations, and international finance institutions. STDT submitted input and assisted with the policy, agribusiness, storage rehabilitation, and vertebrate pest components of the Food Storage Management (FSM) and ASSP projects.

STDT provided data and assisted researchers and project teams from:

Natural Resources Institute, Overseas Development Administration, (NRI), Great Britain;
World Bank;
Asian Development Bank (ADB);
International Monetary Fund (IMF);
International Food Policy Research Institute (IFPRI);
International Maize and Wheat Improvement Center (CIMMYT);
Australian Center for International Agricultural Research (ACIAR);
ASEAN Grains Postharvest Programme (AGPP);
Canadian International Development Agency (CIDA);
U.S. Wheat Associates;
American Soybean Council;
U.S. Feed Grains Council;
Foreign Agricultural Service, USDA; and
International Development Program, Harvard University.

Institutionalization

In the past year, concerted efforts have been made to institutionalize project activities and achievements. The focus was on two areas; leaving a cadre of Pakistani personnel who had worked for the STDT project in place for future activities, and encouraging the private-sector agencies to continue the development process activities of STDT.

Three institutions have accepted the challenge: the Punjab Food Department, the University of Agriculture at Faisalabad, and a private-sector rice mill and marketing firm. Most of the LTC staff will become employees of and contractors to the Punjab Province Food Department. Their responsibilities include operation and expansion of bulk procurement, storage, and distribution as tested by STDT, and to coordinate training and research with the University of Agriculture.

Some Lahore staff technicians will work for a private-sector rice milling and marketing firm. They will install and operate bulk handling equipment and train other employees.

The University of Agriculture developed courses in grain science with emphasis on handling, storage, and processing of grains. The University started the program in October 1992, with the majority of the class from the private sector. A former employee of STDT is now the trainer and research director for a domestic manufacturer of fumigants. This firm is conducting training programs for the public and private sector on a wide range of agricultural commodities using technology developed by PARC/STDT. The firm now funds insect resistance research at GSRL in Karachi.

Policy and Coordination

The project was originally positioned as the technical component of a larger project in which policy analysis was the major focus of another component. However, to implement technical changes, policies within the wheat industry needed research, discussion, and reformulation. As the policy unit was not prepared to undertake the policy analysis at that time, STDT conducted policy research supported by technical research and development activities within the project. STDT had extensive collaboration with other groups to provide wheat policy issues and information.

- Conducted research in storage losses, price, and quality (including wheat grades and standards) policy issues that were presented in seminars to both public and private sectors.

- The research in wheat policy issues and subsequent seminars initiated a dialogue between the public- and private-sector attitude changes.

Recommendations

1. Do not repair or rehabilitate anything using donor funding and personnel. Making such repairs is in essence a reward for negligence by the recipient. External repairs and maintenance are a subsidy that disguises the true cost of operations.

2. Do not think of food departments and PASSCO as charitable and poverty stricken organizations. Their assets in real estate, inventories, and other property are substantial. The minimum cash flow of PASSCO and the Punjab Food Department from the 1992 wheat procurement is US$120 million and US$231 million respectively. The amounts are large by any standard. These organizations lack earmarked funds for repair, maintenance, equipment, travel, etc., due to over-staffing and irregularities, plus archaic budgeting and management procedures. This does not negate the fact that they have income and are capable of generating funding on their own. For these organizations to pay their own way will take policy changes, new laws, and a stronger management backed by political will which has not been exhibited thus far. As long as donor agencies are available to provide the "extras," the longer hard choices and reforms will be postponed. Decisions to privatize public-sector involvement in the grain trades will also be delayed.

3. Concentrate only on things that advance or enhance. Do not engage in things that correct conditions or neglect the past. Ninety percent of grain storage losses are preventable by keeping the grain and storage areas clean. This takes only simple equipment and persistence in using it.

4. Exploit opportunities; do not be too rigid and precise in plans of work, etc. Whatever successes STDT had were due to its ability to move into new opportunities with full support of the USAID project officer. STDT moved from one clientele group to another as conditions permitted or opportunities arose.

A Personal Note: Successes -- Satisfactions

1. Seeing our local staff and institutional counterparts developing competence and ability to function and operate on their own initiative.

2. Public- and private-sector acceptance of bulk handling concepts.

3. Institutionalization program with the Food Department, UAF, and the private sector.

4. High quality stored grain research being done with PARC/STDT personnel.

5. Ability to work with diverse groups in the public and private sectors, international agencies, and USAID projects.

6. Support, encouragement, and confidence in STDT given by USAID.

Failures -- Disappointments:

1. Tendency in Pakistan to delay and lose momentum at the most in-opportune times. Changes in key counterpart officials, abrupt policy changes, political events, natural disasters, and similar occurrences interrupt planned activities in a manner that takes days or weeks to overcome.

2. Failure to communicate fully with MINFA and the Storage Cell.

3. Slow pace of action and inefficiency among private-sector management.

4. Not getting further along with the bulk terminal at Port Qasim and a Pakistan railroad for bulk handling.

5. Level of communication with KSU administration.

6. Death of Shahid Ali, promising young researcher in a traffic accident while returning to Karachi from an STDT/GSRL research activity in Multan.

TABLE 1

SUMMARY OF STDT IN-COUNTRY TRAINING

Type of Training	No. Sessions	Attendance
Flour Milling Seminar/Workshops	11	767
PASSCO & PFD Storage Operations Personnel	29	697
Bulk Handling Demonstration - Lahore	1	177
Fumigation of Hexagonal Bins	4	170
Bulk Handling Demonstration - Rawalpindi	1	125
Fumigation and Pest Management	6	122
Bulk Wheat Handling & Storage Demonstration	1	110
UAF Seminar/Workshop on Grain Management	1	103
Bulk Equipment Operations and Maintenance	1	100
Bulk Handling and Storage Conference	1	98
Seminar/Workshop on Wheat Policies	1	80
Fumigation Technology for Private Sector	1	53
Other Training Courses	6	51
Bulk Equipment and Storage Research	1	35
Fumigation of Open Bulkheads	3	30
PEPF Technique	3	30
Silo Fumigation	2	28
Bulk Equipment Training	1	26
Non-Degree Academic Training - 2 Semesters	1	19
Computer Operations	2	18
Master Trainer Course	2	18
Godown Fumigation	1	10
Grain Drying & Feed Milling Operations	1	10
Total In-Country Training Participants	**81**	**2,877**

TABLE 2

SUMMARY OF EXTERNAL TRAINING

Years	Course/Activity	Organizations	Participants
	Short Courses		
1987-90	Grain Storage & Marketing (6 weeks)	UAF, MINFA, PASSCO, PFD SFD, AARI, NW-FD, PUNJAB SEED, COTTON RES. INST. CEREAL INST., PVT. SECTOR AARI, PUNJAB SEED, PVT. SEC.	26
1990	US Grain Marketing, IGP/KSU (2 weeks)	MINFA, PASSCO	2
1990	Flour Milling (5 weeks)	PRIVATE SECTOR	2
1992	Bulk Handling (6 weeks)	PFD, PASSCO	14
1992	Grain Grading (4 weeks)	PFD, PASSCO	12
	Invitational Study Tours		
1988	Postharvest Research Tech (2 weeks)	PARC	1
1990	Bulk Grain Handling & Mgt (2 weeks)	MINFA, PFD, SFD, BFD, NWFD, USAID, MIN. FIN.	17
1992	Bulk Handling & Research (2 weeks)	PFD, UAF	12
	Other External Training		
1987-88	ASEAN Postharvest Conferences (1 week)	MINFA, PARC	2
1990	Gas Chromatograph, Switzerland (1 week)	PARC	1
1989-92	Academic Training (2 M.S., 1 Ph.D.)	PARC, AARI, PUNJAB AGR.	3
	Total External Participants		**92**

ANNEX I

PARC/STDT ROLE IN INTERNATIONAL ADVANCEMENT OF FUMIGATION TECHNOLOGY

An interesting sidelight of the STDT/GSRL cooperation is the development of a new world standard method for measuring the phosphine gas concentrations. Measurement of phosphine gas in parts per million (PPM) is critical to the success of fumigation. The gas must be maintained at a level of 200 ppm for a specified time. The PARC/STDT research developed a low cost method for determining the number of hours required for effective fumigation by specific locations, thus saving time and fumigants.

Dr. Alan Harris, Natural Resources Institute, Great Britain, developed an electronic device for the direct digital readout of phosphine gas concentrations. The heart of the meter is a microchip that reacts to the presence of phosphine gas. The microchip was originally developed for the U.S. National Aeronautic and Space Administration (NASA) for detecting trace elements in space. While the basic research and development was done in Great Britain, field testing of the phosphine detection device was done in Pakistan. Prototype devices provided to GSRL were used in all of the STDT bagged and bulk research.

The previous method of measuring phosphine gas concentrations is the Draeger tube. A Draeger tube is a sealed glass tube internally coated with chemical reagents. To take a reading, the ends of the tube are broken off and measured amounts of air containing phosphine gas drawn through it. The phosphine gas causes the color changes in the tube according to its concentration. The tube is then matched against a master color chart and readings interpolated. The Draeger tube technique requires skilled personnel for sampling and interpretation. The tubes are also expensive at $2.00 to $5.00 each, depending upon the range of gas concentrations to be measured. Cost and availability of tubes limit the readings that can be taken.

From 1987 to 1990, STDT/GSRL assisted Dr. Harris and the NRI teams visiting Pakistan in godown fumigation experiments. Many of these were in conjunction with the STDT training and research programs.[1] The advantage of the Harris meter is that gas concentrations are immediately available as a digital readout. The power source is the common 9V transistor dry cell. The measurement process is simple and the research can be designed without restriction on the number of readings to be taken. This enables measurement of the rate of gas dispersion and penetration of the grain mass. Relatively unskilled persons can be trained to take readings, thus research assistants can be left to monitor experiments while the principal researchers pursue other activities.

---

[1]D. Halliday, A. H. Harris, A. J. Brisbrowne, Fumigability of Godowns in Pakistan, Natural Resources Institute, 1991.

The Harris meter was commercialized in 1991, by the Bedfont Technical Instruments Company, LTD. of Great Britain. It has since become the world standard instrument for phosphine measurement in commercial practice and grain storage research.

ANNEX II

DEVELOPMENT OF BULK GRAIN HANDLING AND MILLING COMPLEX IN THE PRIVATE SECTOR

Early on, an eager young man sought Dr. Acasio's advice on design and equipment requirements for a new rice mill and bulk handling system. This budding entrepreneur followed the advice given, and after nearly four years has succeeded in developing one of Pakistan's most modern rice mills with an integrated bulk system for procurement, drying, and storage of paddy rice. The firm also has the potential for extending the bulk handling system to private procurement and distribution of wheat.

This rice mill venture, voluntarily given by Dr. Acasio for over three years on his own time, has a number of long lasting spin-offs. The rice mill has the potential for becoming a research and training center for the University of Agriculture, Faisalabad. Several recent Faisalabad graduates have been employed, and the firm has set up a laboratory and dormitory facilities for Faisalabad faculty and staff.

Another facet of this venture is that, following Dr. Acasio's advice, the rice mill owner carefully selected a few key pieces of the highest quality imported milling and grading equipment and had the remainder of the mill's requirements locally fabricated. This greatly reduced the total cost while permitting the mill to produce six grades of rice from common dry paddy. The combination of lower capital costs, quality assurance, and the ability to produce to the buyers' specifications gives this mill a very distinct advantage in domestic and export markets.

The local equipment fabrication has also opened up new avenues for agribusiness development in Pakistan. The continuous flow dryer and tempering bin system designed by Dr. Acasio was completely fabricated by a local machine shop. Three other rice mills have expressed interest in buying the dryer. The total cost of the locally made system is about Rs 1 million (U.S. $40,000). This is in contrast to a Rs 10 million (U.S. $400,000) imported drying system of a newly opened rice mill near Lahore. More importantly, the transfer of dryer construction and operating technology paves the way for further development of grain handling and processing equipment. The shop that made the dryer and bins employed ten personnel for its construction and installation.

As the rice mill and drying system were nearing completion, the mill owner began negotiations for long-term sales contracts. He requested assistance from STDT in developing a computer based model for which he could project costs and margins for both the rice mill and clientele. The model developed was based upon projected paddy costs, milling yields, product mix, and interest rates. The model was used to obtain a supply contract worth R77 million (US$2.5 million) from one of Pakistan's largest food distributors. As the STDT project closes, the mill owner is using the model for negotiating export rice sales to the Middle East and Great Britain.

ANNEX III

ILLUSTRATIONS OF A TIVITIES

Previous Page Blank

Training programs stressed practical applications in the work-place. Much of training consisted of hands-on experience.

The PEPF fumigation method requires large gas-tight plastic covers. These are made on site with sealing machine.

Previous Page Blank

STDT interacted with the private sector and other organization to provide assistance to the milling industry. Above, Henry Stephens, U.S. Wheat Council reaches to make a point about flour milling in technical seminars organized by STDT for flour millers.

Dr. Acasio and Shamsher Haider show a design for a convertible godown to a partners in a Peshawar flour mill. The godown was completed in Nov. 1992, with technical assistance from STDT.

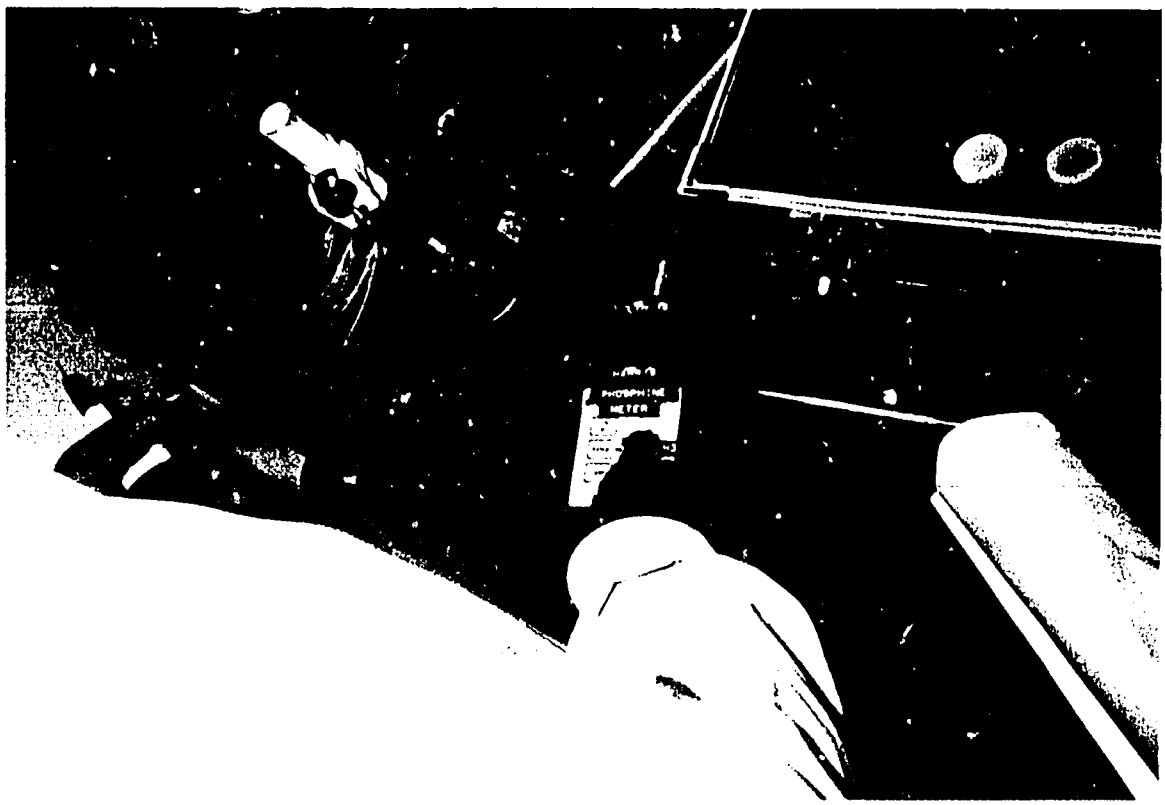

Extensive field testing of a prototype modules of digital read out phosphine meters during PARC/STDT storage research assisted in advancing research technology.

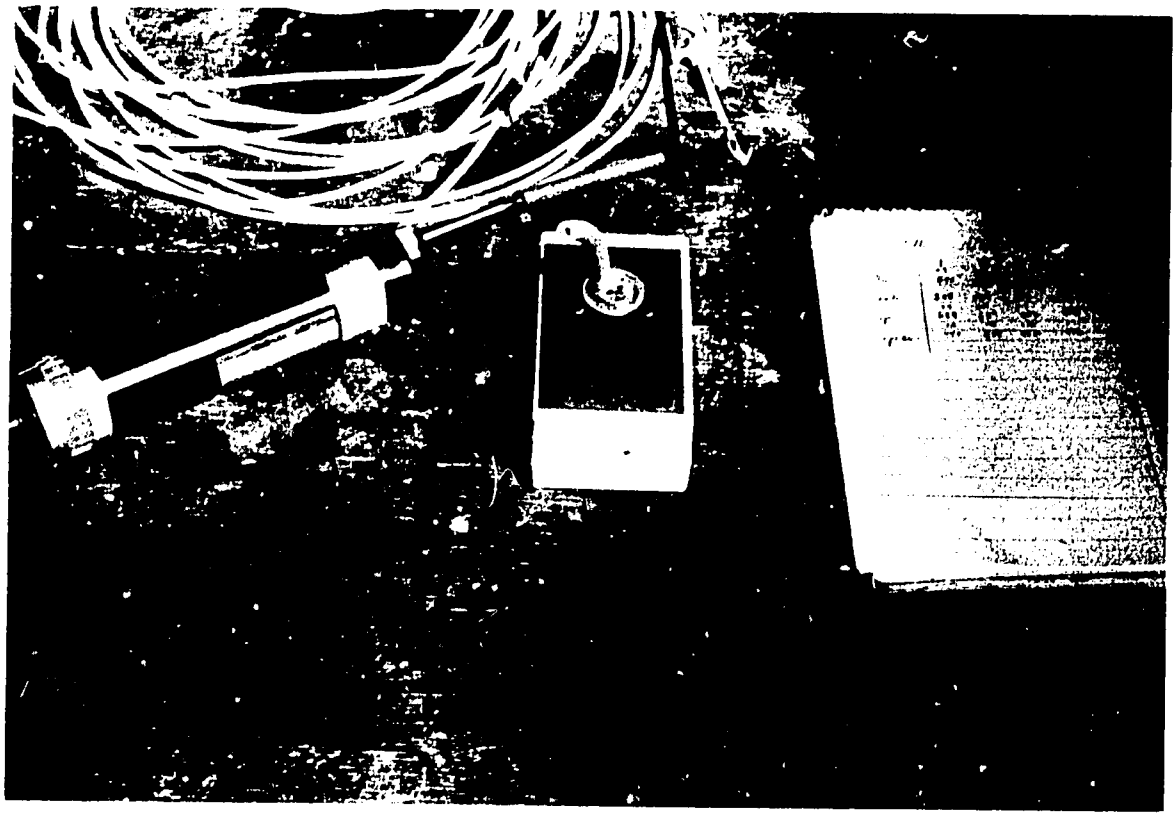

Testing was done in cooperation with the National Resources Institute of Great Britain.

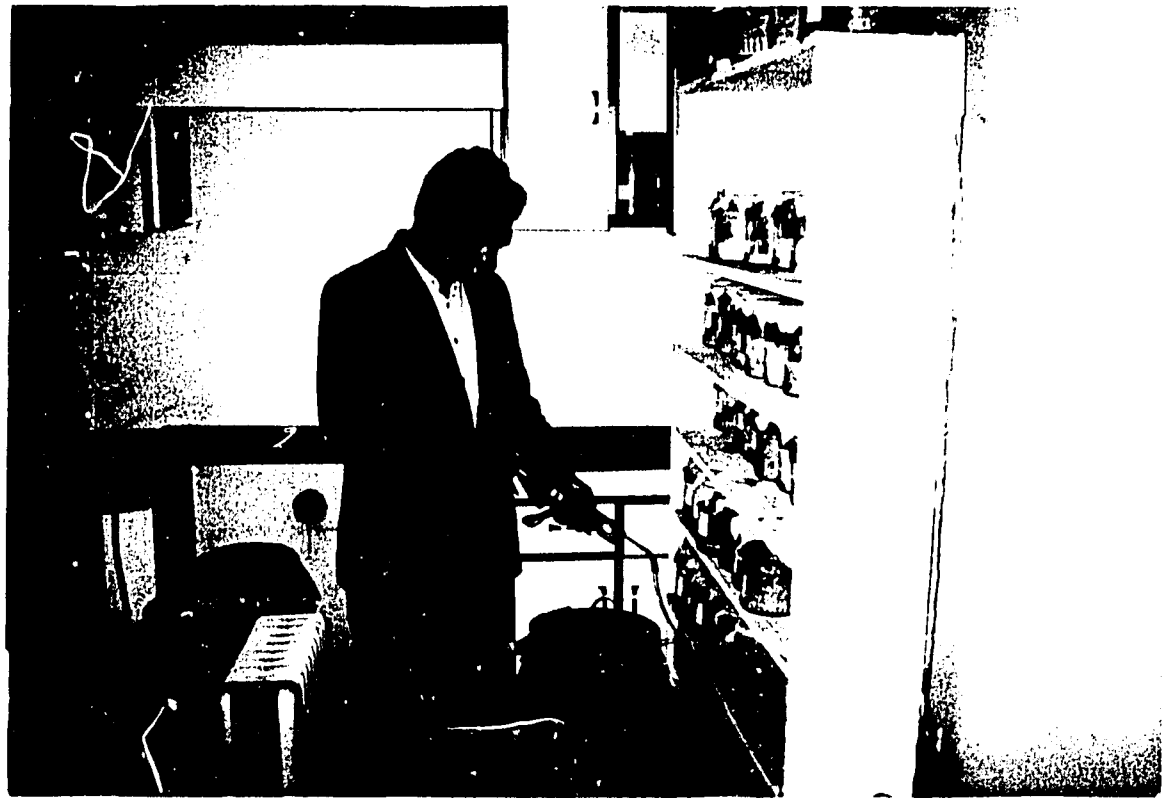

A small room equipped with a heater, humidifier, and air conditioner replaces an imported environmental chamber costing over $20,000. The plastic barrels serve as mini-environmental chambers on insect resistance research. This simple low-cost technique has gained international recognition.

The phosphine meter was commmercialized in 1991. It is now used worldwide as the standard phosphine monitoring device in commercial storage and research application.

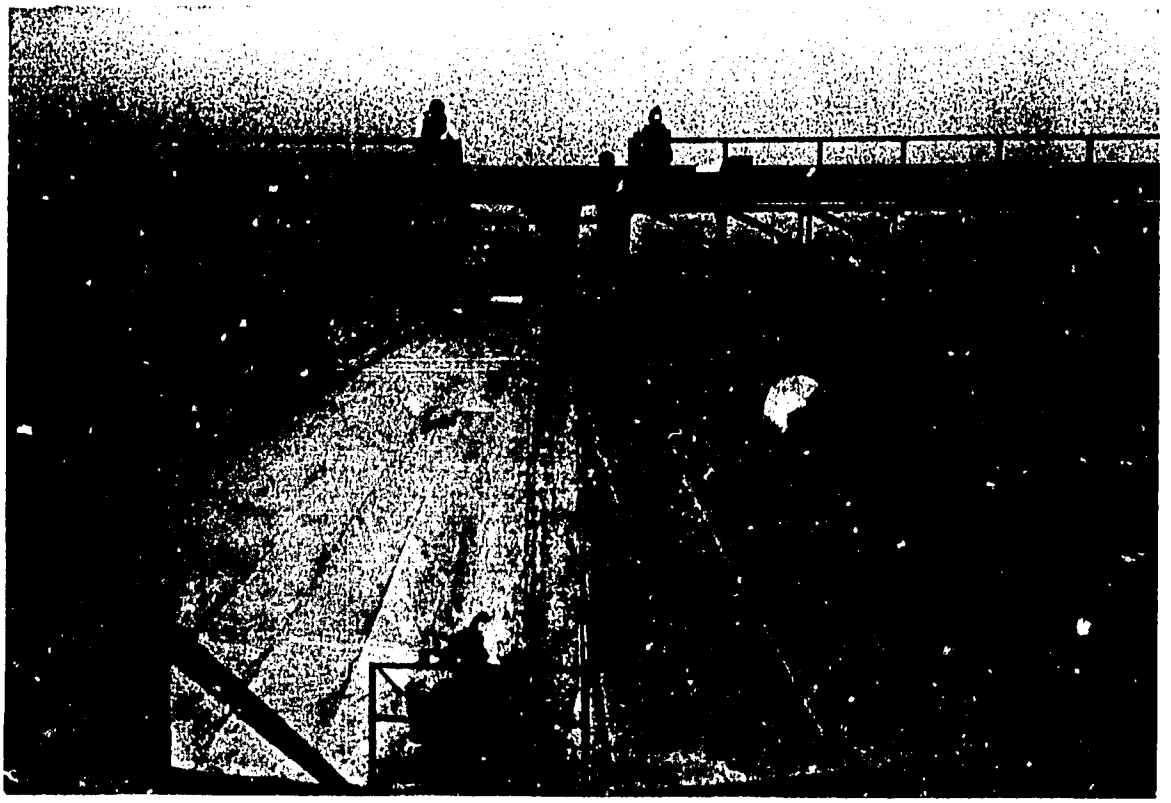

The 4,500 ton silo could not be fumigated with phosphine due to the porous roof structure. Methyl bromide was used as it is heavier then air.

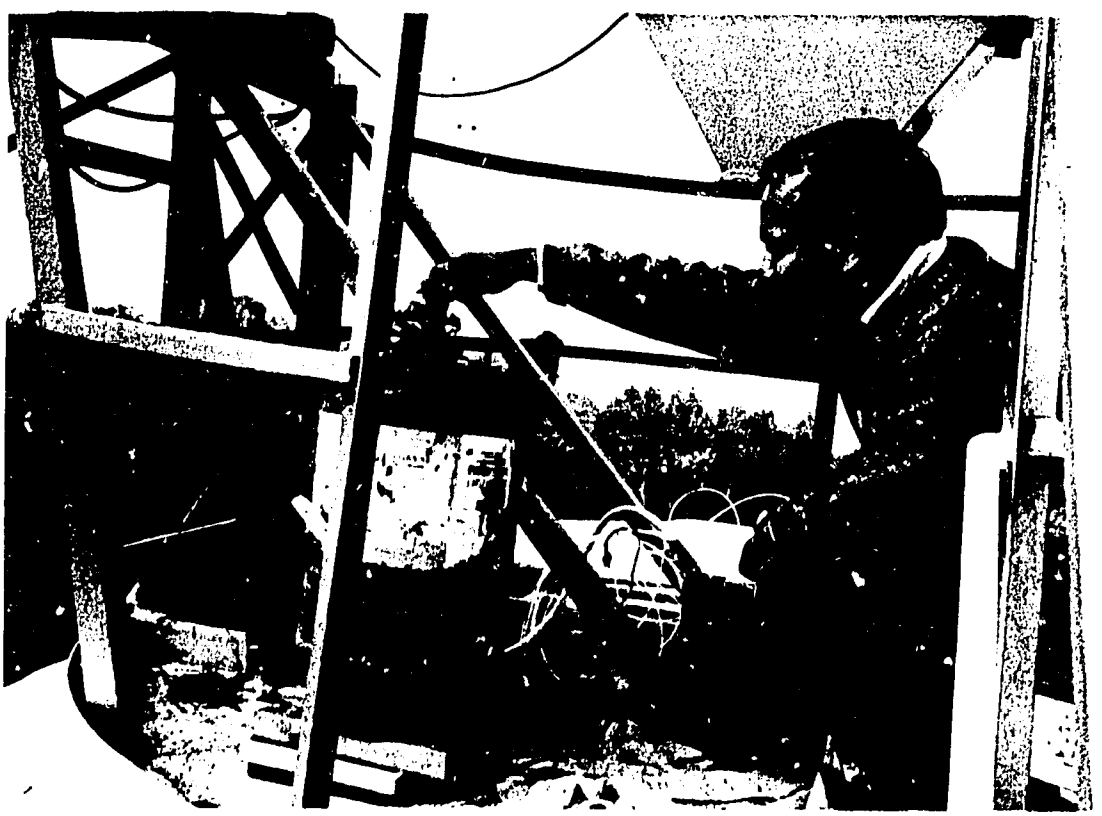

Applying methyl bromide fumigant. Note tubes for monitoring gas concentrations throughout the silo.

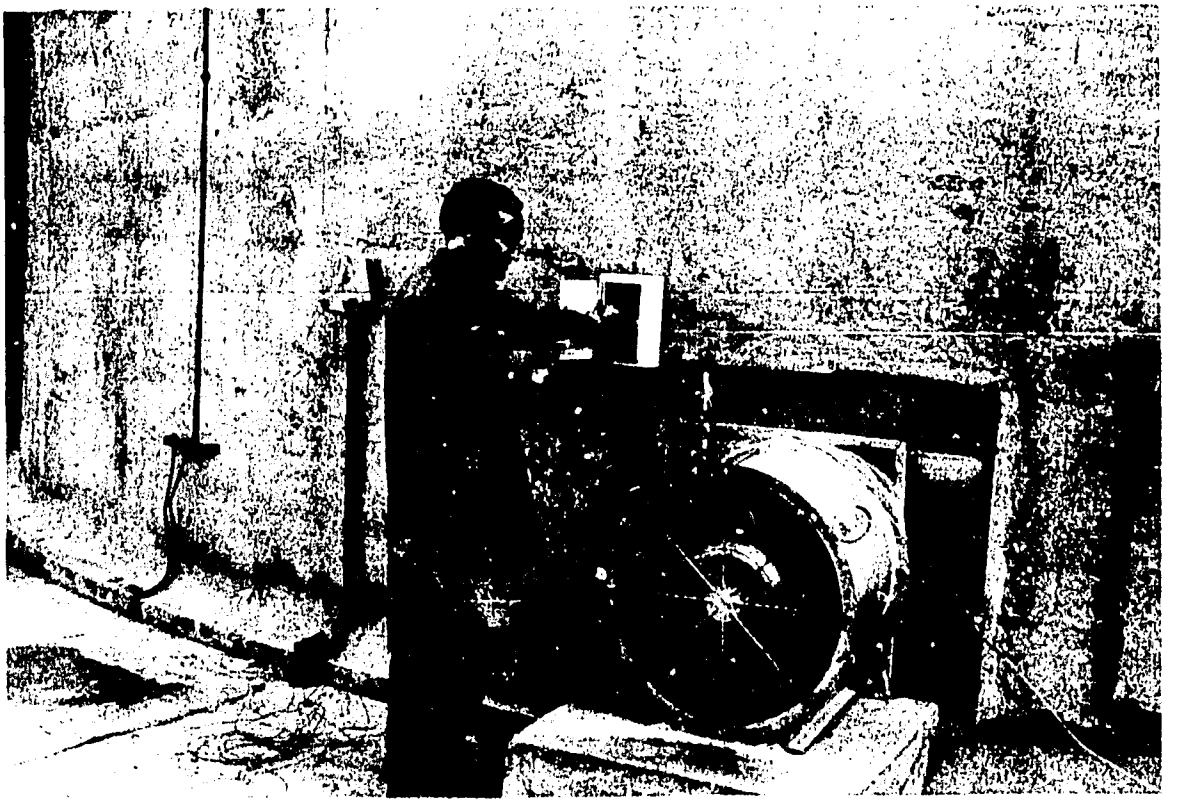

After methyl bromide is applied, fumigant is drawn through grain mass using the down draft aeration fan.

When fumigant is detected, openings are sealed. Two-way radios coordinate activities at silo top and bottom for personnel safety.

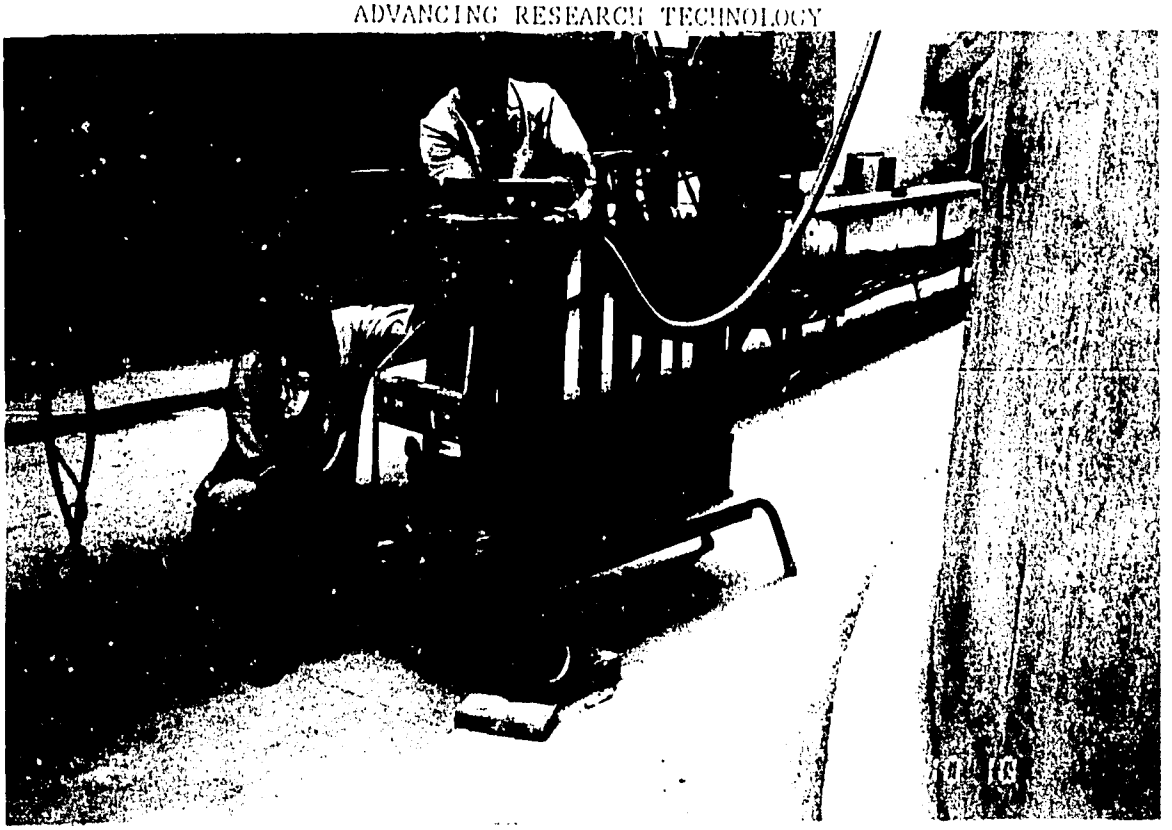

This experimental Gilbert grain probe, one of only two in existence, carries grain storage research to new heights and depths. The probe can pull grain samples from 30 meters.

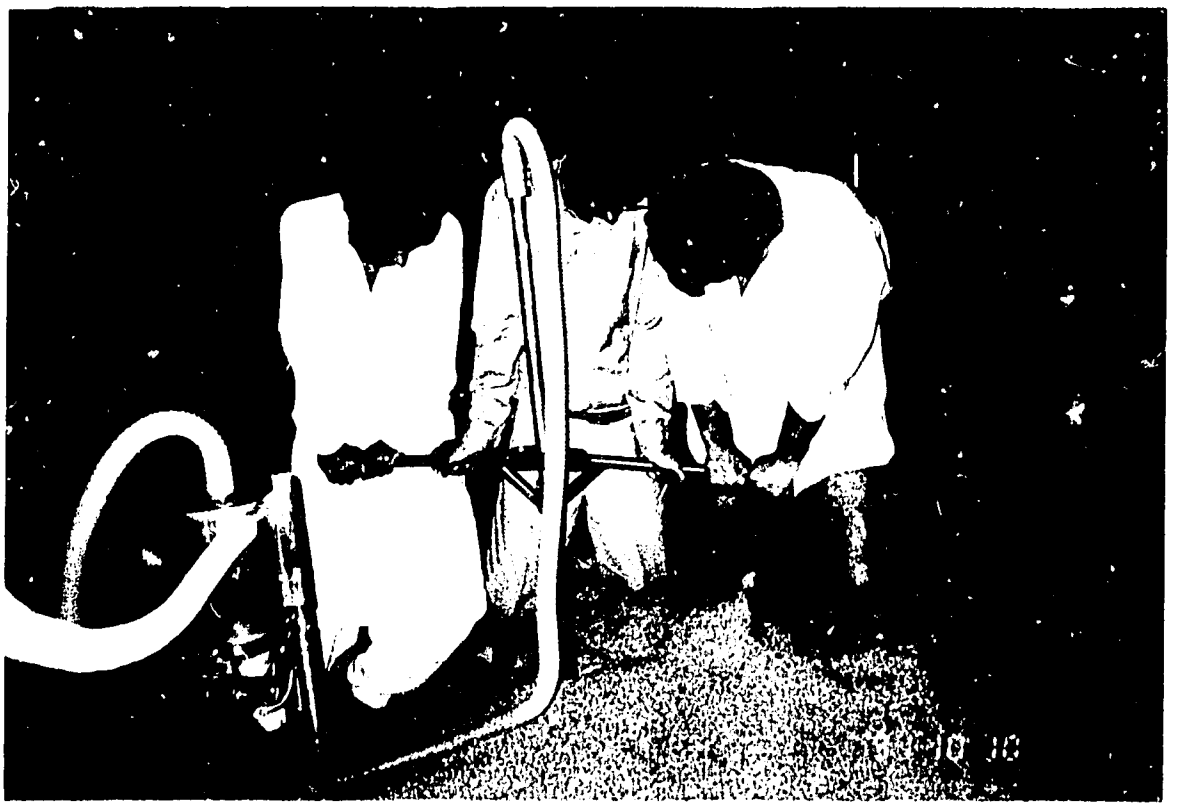

On top of the 25 meter deep grain mass in the Chichawatni Silo, the PARC/STDT researcher test for insects at various depths prior to fumigation. Note insect trap in the foreground. Phosphine tablets can be accurately placed by dropping them down the tube as the probe is withdrawn. Commercially available grain probes can reach only 10 meter and are difficult to use.

STDT and private-sector cooperation restored an expensive and unused experimental flour mill at Faisalabad. The STDT and Punjab Government support has enabled the University to develop academic training and research programs in grain storage and quality control.

This Faisalabad graduate student is conducting research on rice quality under the direction of Dr. Acasio. The student was recently hired as the quality control manager for a rice milling complex and has recruited other graduates to assist him.

ANNEX IV

INSTITUTIONALIZATION OF GRAIN STORAGE RESEARCH AND TRAINING IN THE PRIVATE SECTOR

The head of GSRL retired in July 1990. He then served as an STDT consultant and employee until November 1991. During this time, stored grain protection methodologies were developed for four types of bulk storage, and a low cost technique for determining insect resistance to fumigation was developed.

The STDT employee saw the need for and developed a refresher short course for professional fumigators, commodity exporters, and the Plant Protection and Quarantine Service Services of MINFA. The course was very successful and the materials developed are now being used as a reference manual and operating guidelines by professional fumigators and the Plant Quarantine Service.

In 1988, a Pakistani company was manufacturing phosphine fumigants under license of a European company. Many problems and high production costs were encountered from using only chemicals supplied by the European company. The company wanted to end the license arrangement and produce on its own, but needed field testing and documentation to obtain a license for selling under its own brand in Pakistan. GSRL provided assistance to the company, and some testing of the locally produced fumigants was conducted as part of the PARC/STDT bagged and bulk grain research. These results were acceptable to the licensing authorities and the company began domestic production. This lowered the cost of fumigants in Pakistan.

In 1991, the company encountered quality control and marketing problems that seriously endangered the future of the company. The STDT employee resigned and accepted a position with the company as a consultant. He revamped the quality control system to a satisfactory level. He now conducts training for public- and private-sector applicators for wheat and rice. The company is also expanding its training program to include exports and commodities such as tobacco, rice, and maize. The company participated in large-scale bulk fumigation training and research with PARC/STDT at the Multan silos by providing all fumigants required.

This fumigant producer now supports advanced research in insect resistance and is able to export his products. The company also assisted in sponsoring the PARC/STDT grain storage workshop at UAF. The UAF academic training and research program is a result of this conference. The research and training through the STDT and PARC cooperation has been strengthened and institutionalized within the public and private sectors.

Previous Page Blank

ANNEX V

DESIGN AND MODIFICATION OF BULK HANDLING EQUIPMENT

Computer assisted design (CAD) facilitates construction and modification of equipment. The following pages are a sampling of drawings by Dr. Acasio. They range from a simple phosphine tablet applicator to a complex continuous flow grain dryer. The CAD designs presented here are the actual size of the original CAD drawings. The picture at the end is the translation of the drawing into a 40-foot tall structure.

Most local machine shops are able to translate these drawings into reality without conversions into blueprints or shop drawings. The shops often suggest alternatives, depending upon the availability and relative cost of raw materials. There is a great potential for local manufacture of bulk handling in Pakistan.

Previous Page Blank

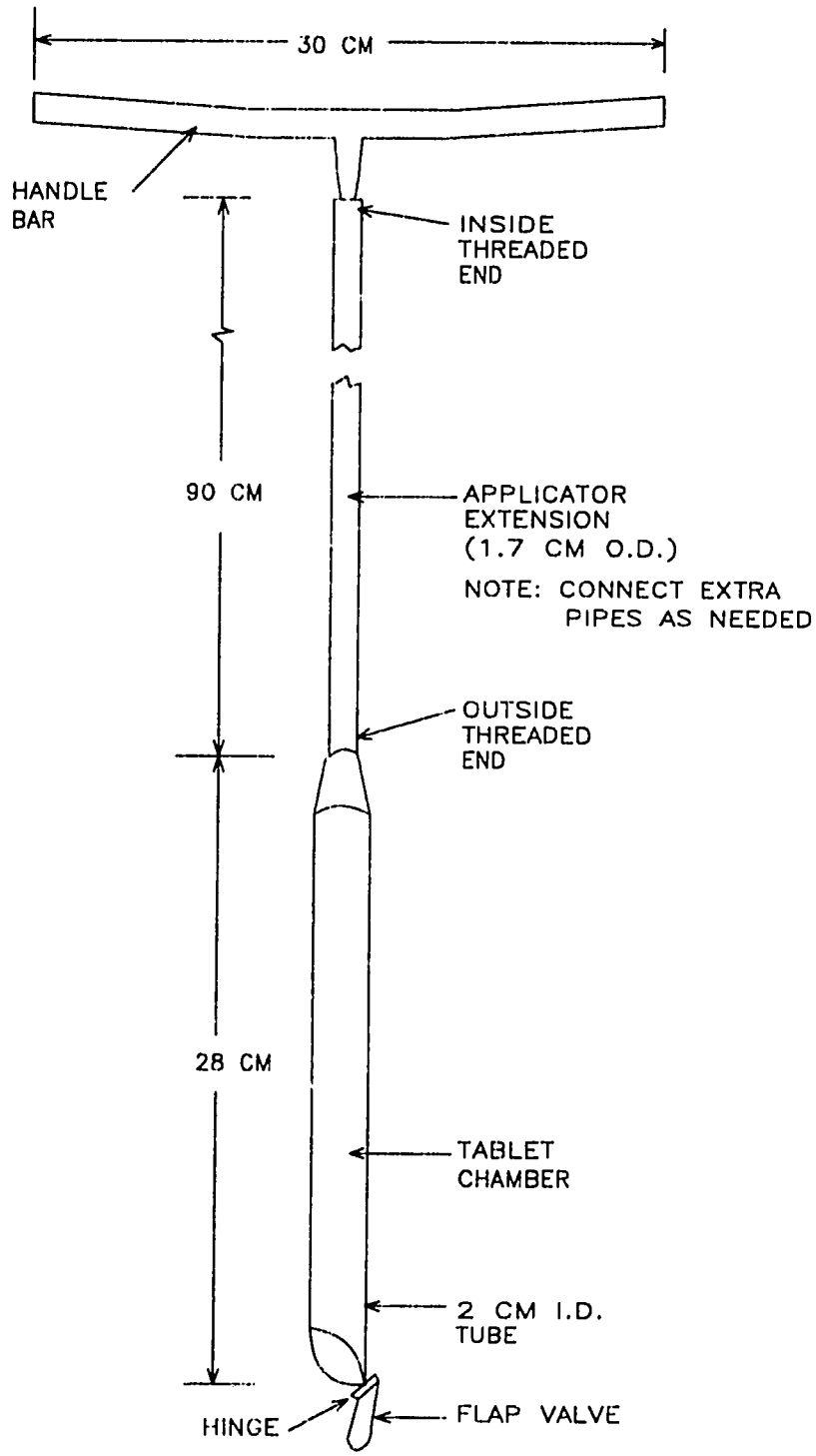

TABLET APPLICATOR

STORAGE TECHNOLOGY DEVELOPMENT AND TRANSFER
FOOD SECURITY MANAGEMENT PROJECT

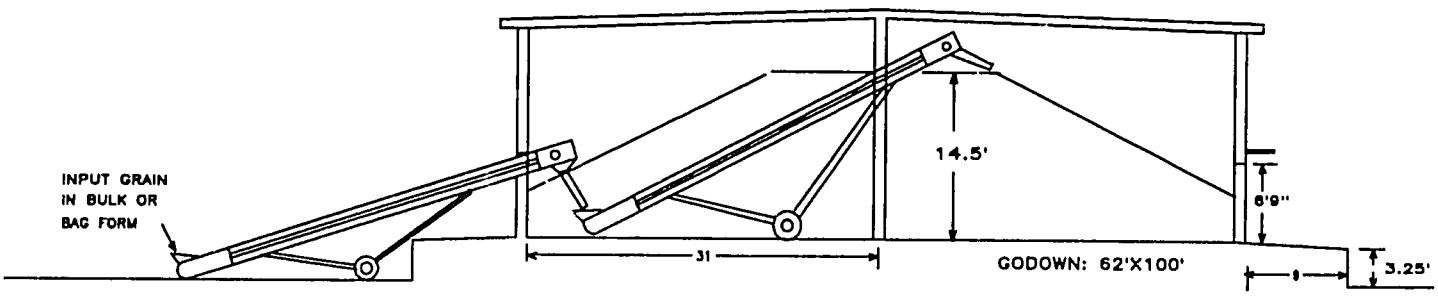

FIGURE 1. FILLING A PASSCO-TYPE GODOWN WITH BULK WHEAT USING TWO GRAIN PUMPS.

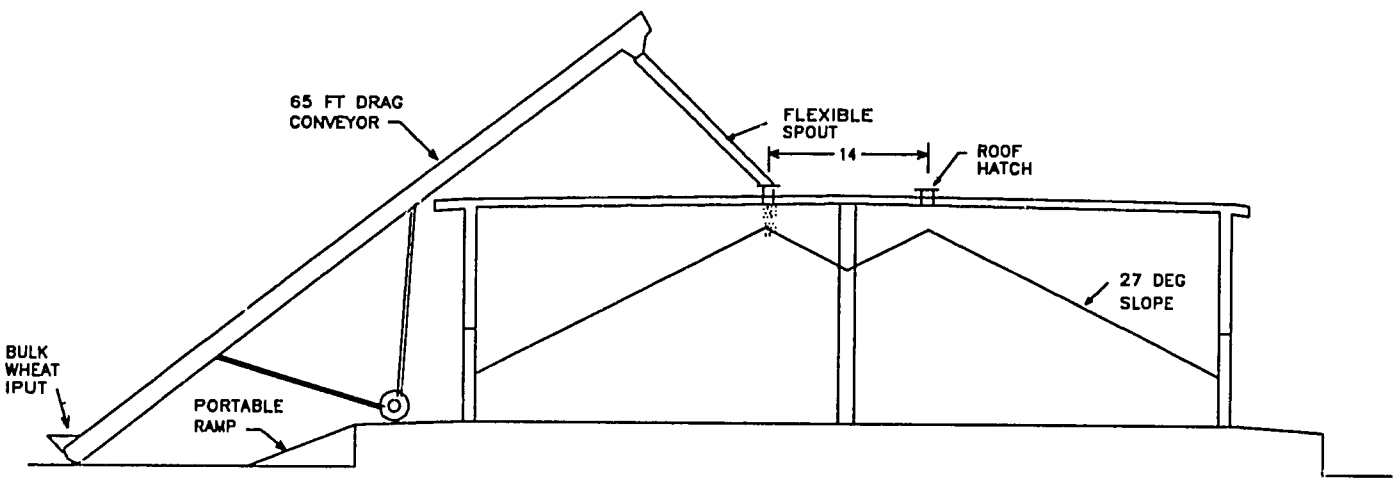

FIGURE 2. FILLING A CONVERTIBLE GODOWN WITH BULK WHEAT THROUGH THE ROOF.

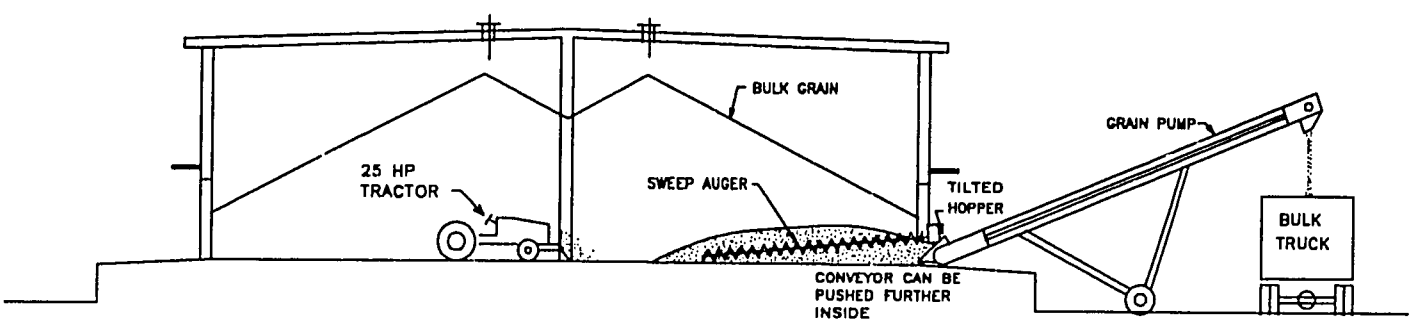

FIGURE 3. RECLAIMING BULK WHEAT FROM A PASSCO-TYPE GODOWN WITH A DRAG CONVEYOR AND A 25 HP FARM TRACTOR EQUIPPED WITH A DOZER.

ROOF HATCH DETAILS

TOP VIEW

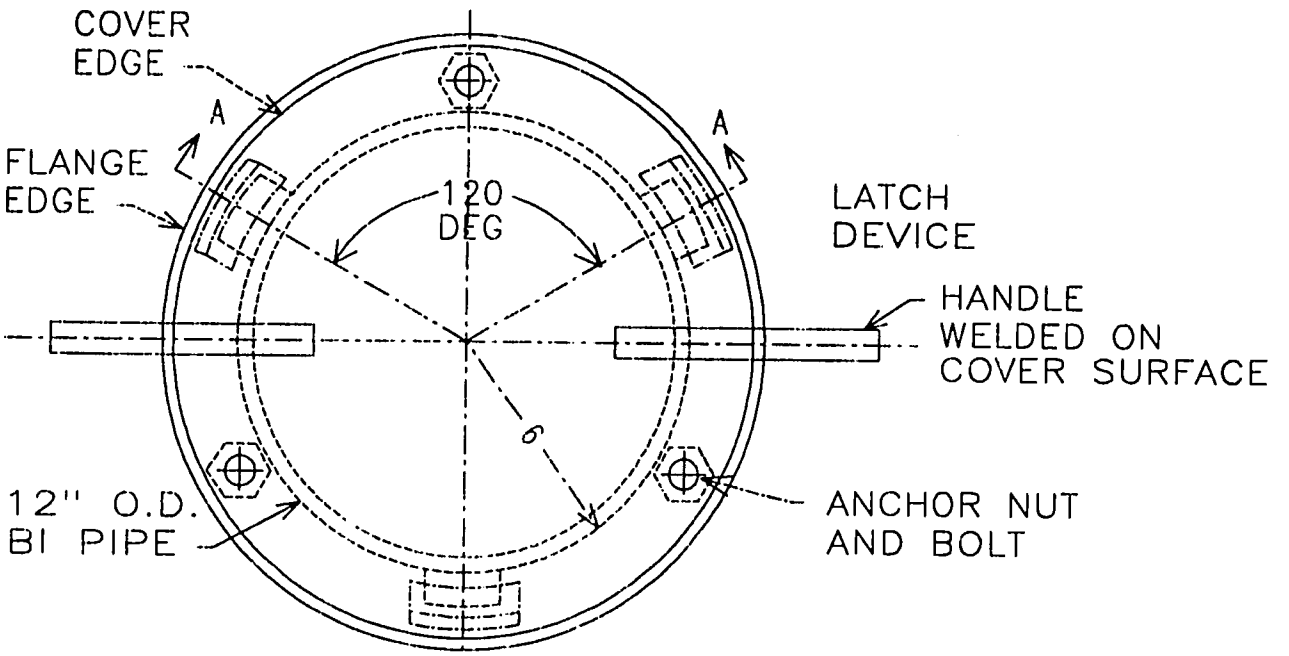

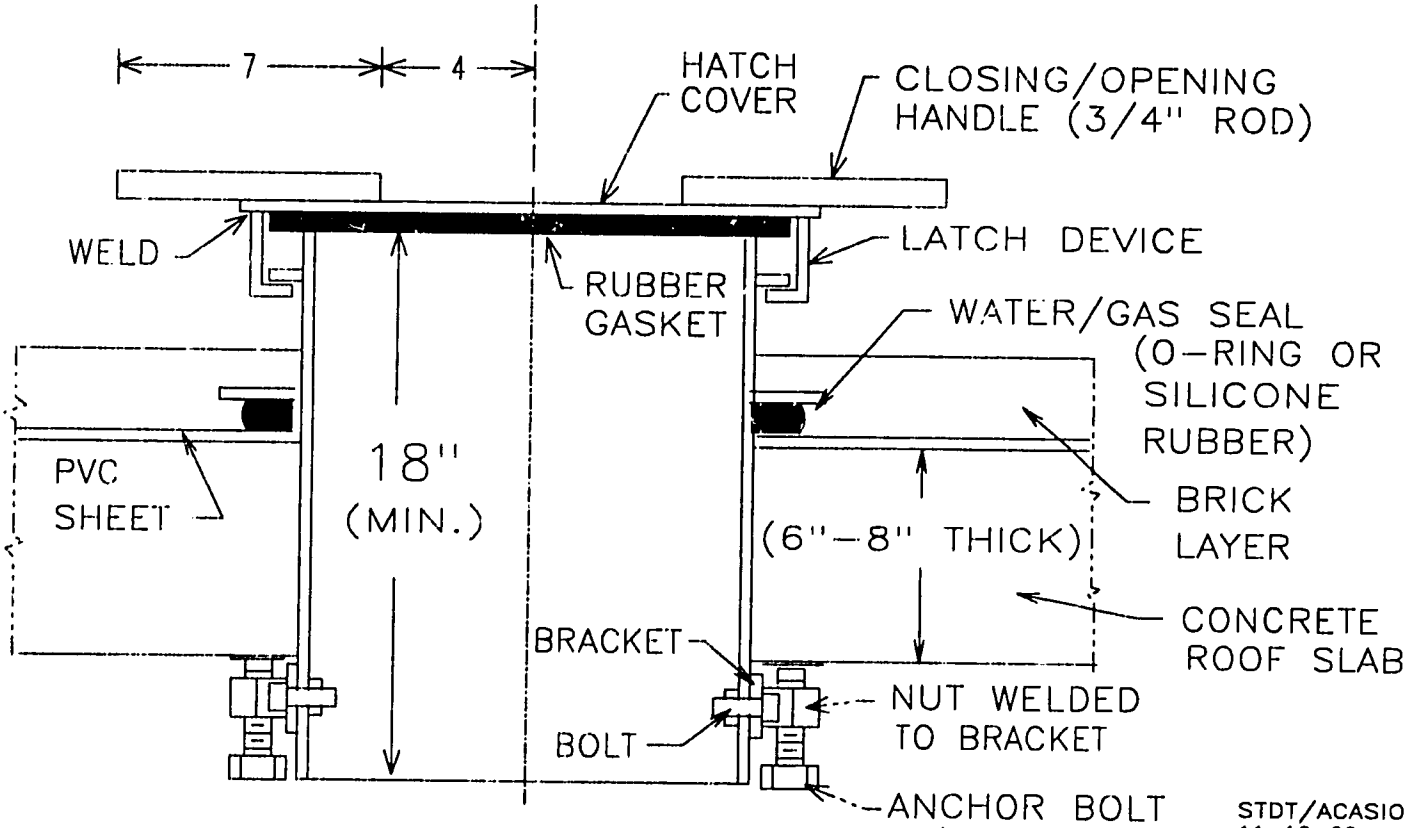

SECTION A-A

STDT/ACASIO
11-10-90
11-13-90

STORAGE TECHNOLOGY DEVELOPMENT AND TRANSFER PROJECT

MOBILE GRAIN PUMP DESIGN

PLAN VIEW

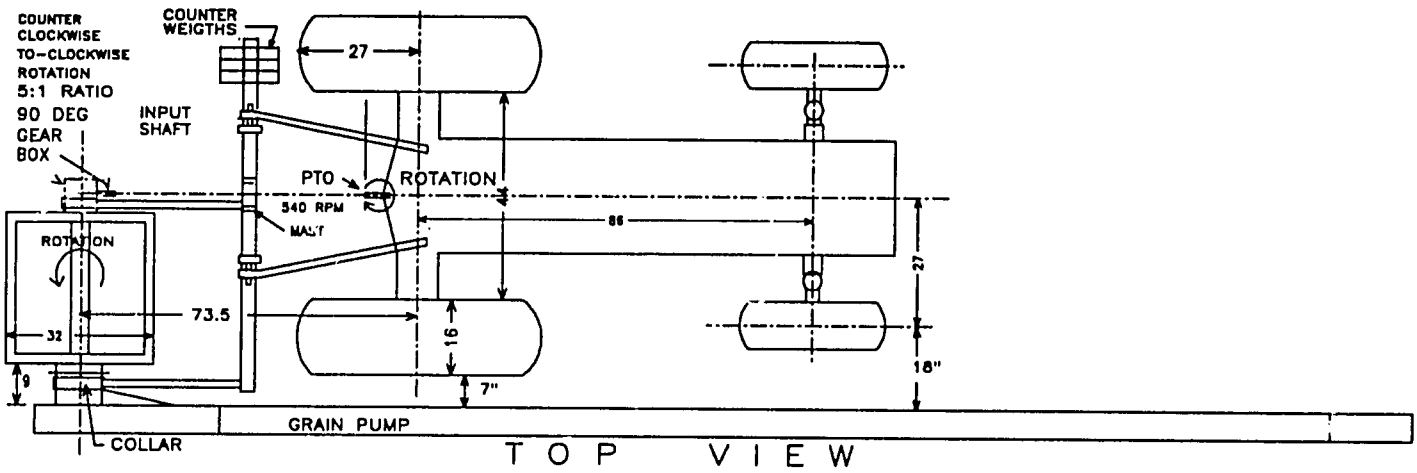

DESIGN DATA:

GRAIN PUMP HP=7.5
PTO OUTPUT HP=65
PTO RPM=540
GRAIN PUMP RPM=125-130
GRAIN PUMP LENGTH= 25'

7-30-90
8-03-90
11-3-90
11-11-90

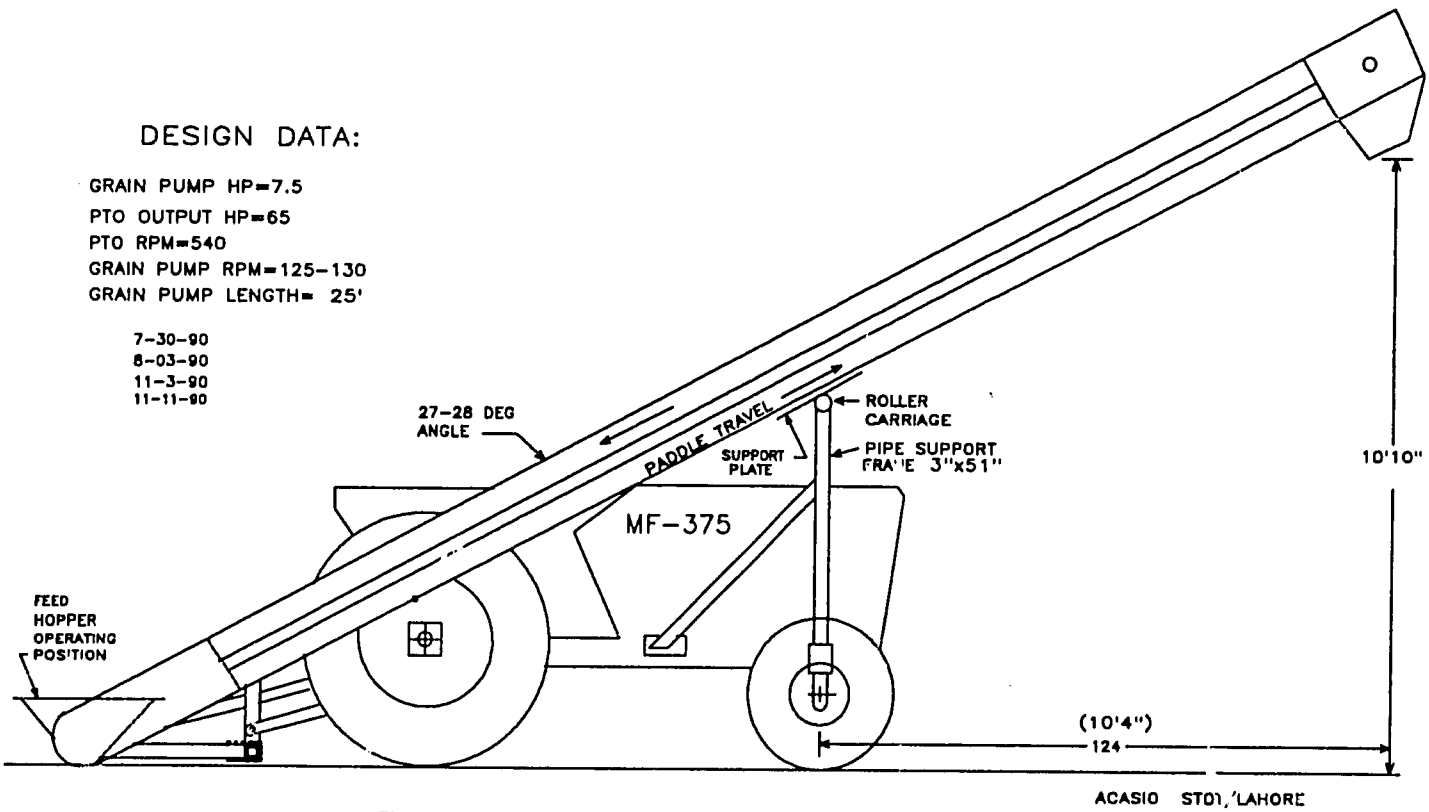

ELEVATION VIEW

41

STORAGE TECHNOLOGY DEVELOPMENT & TRANSFER PROJECT
ASSP/USAID PAKISTAN
KANSAS STATE UNIVERSITY
LSU–TYPE DRIER

FILENAME: LSUTYPEE.DC2

7–5–92

(OPTION E)

15 MT HOLDING CAPACITY
CENTRALIZED HEATING SYSTEM
WITH A COOLING SECTION
10.68 MT DRYING SECTION
3.56 MT COOLING SECTION

REVISED:
7–11–32
8–10–92
9–11–92
9–13–92

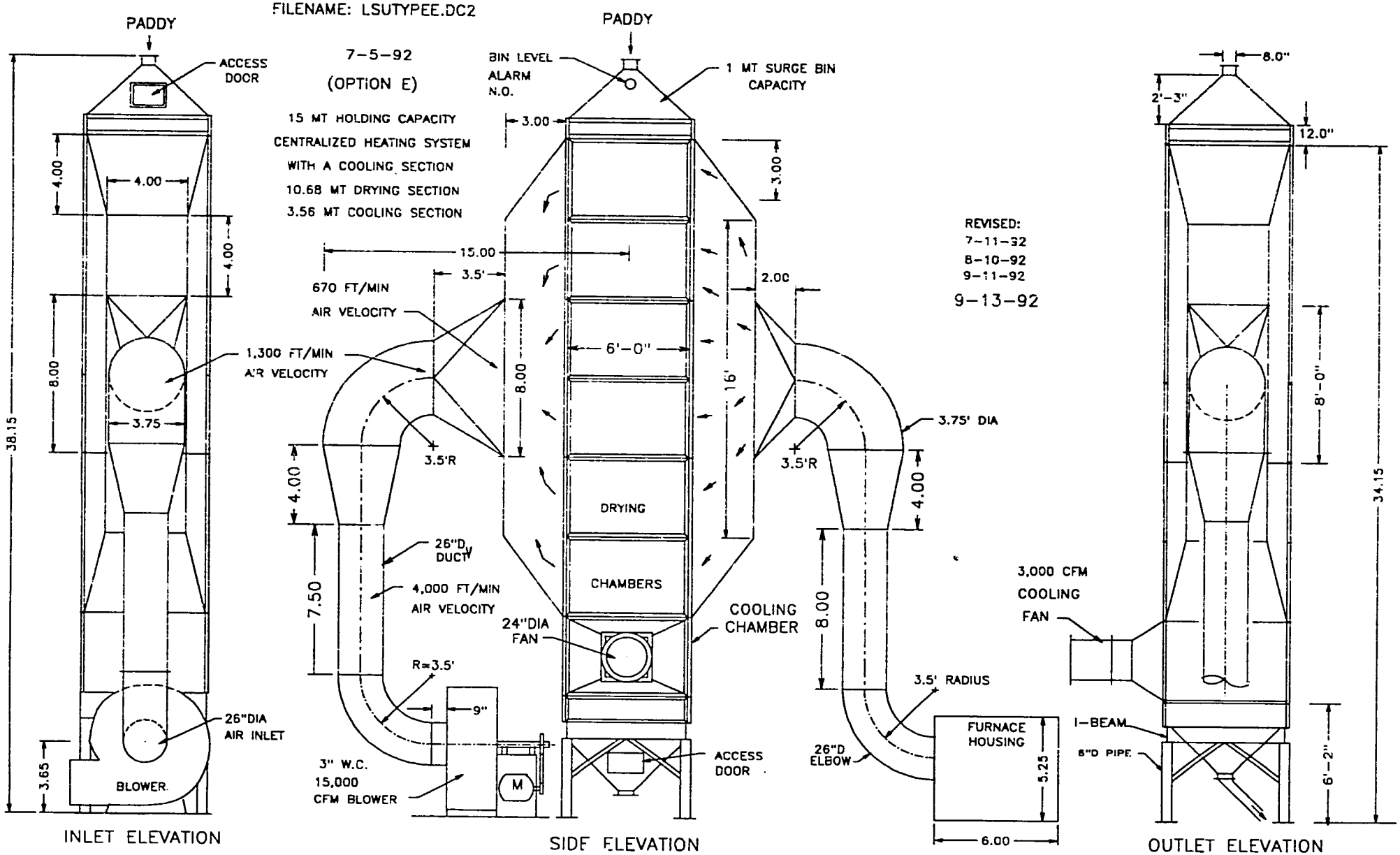

42

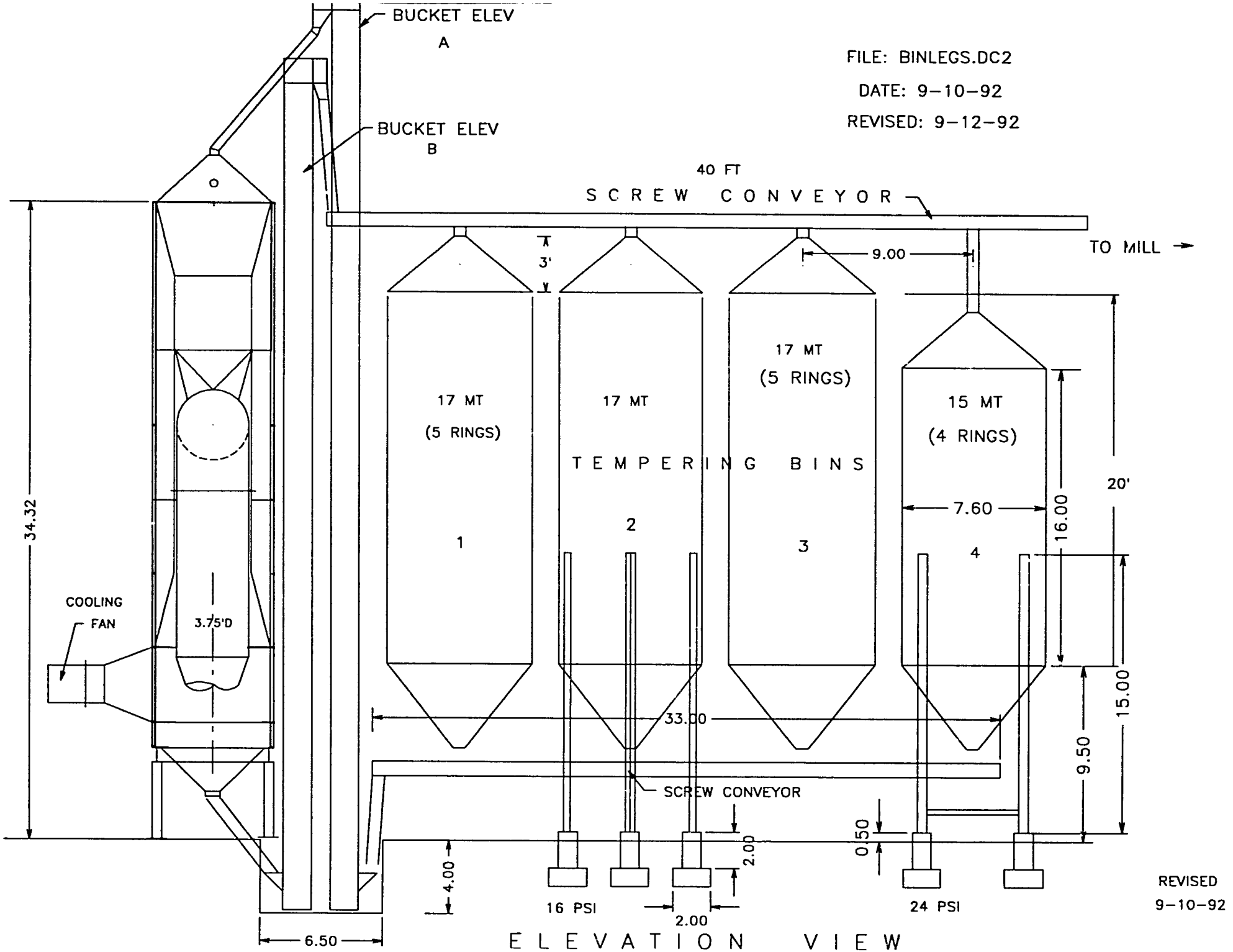
BUCKET ELEV
A
BUCKET ELEV
B
FILE: BINLEGS.DC2
DATE: 9-10-92
REVISED: 9-12-92
40 FT
SCREW CONVEYOR
TO MILL
3'
9.00
17 MT
(5 RINGS)
1
17 MT
2
17 MT
(5 RINGS)
3
15 MT
(4 RINGS)
4
TEMPERING BINS
20'
7.60
16.00
15.00
9.50
34.32
COOLING
FAN
3.75'D
33.00
SCREW CONVEYOR
0.50
2.00
4.00
16 PSI
2.00
24 PSI
6.50
ELEVATION VIEW
REVISED
9-10-92

42

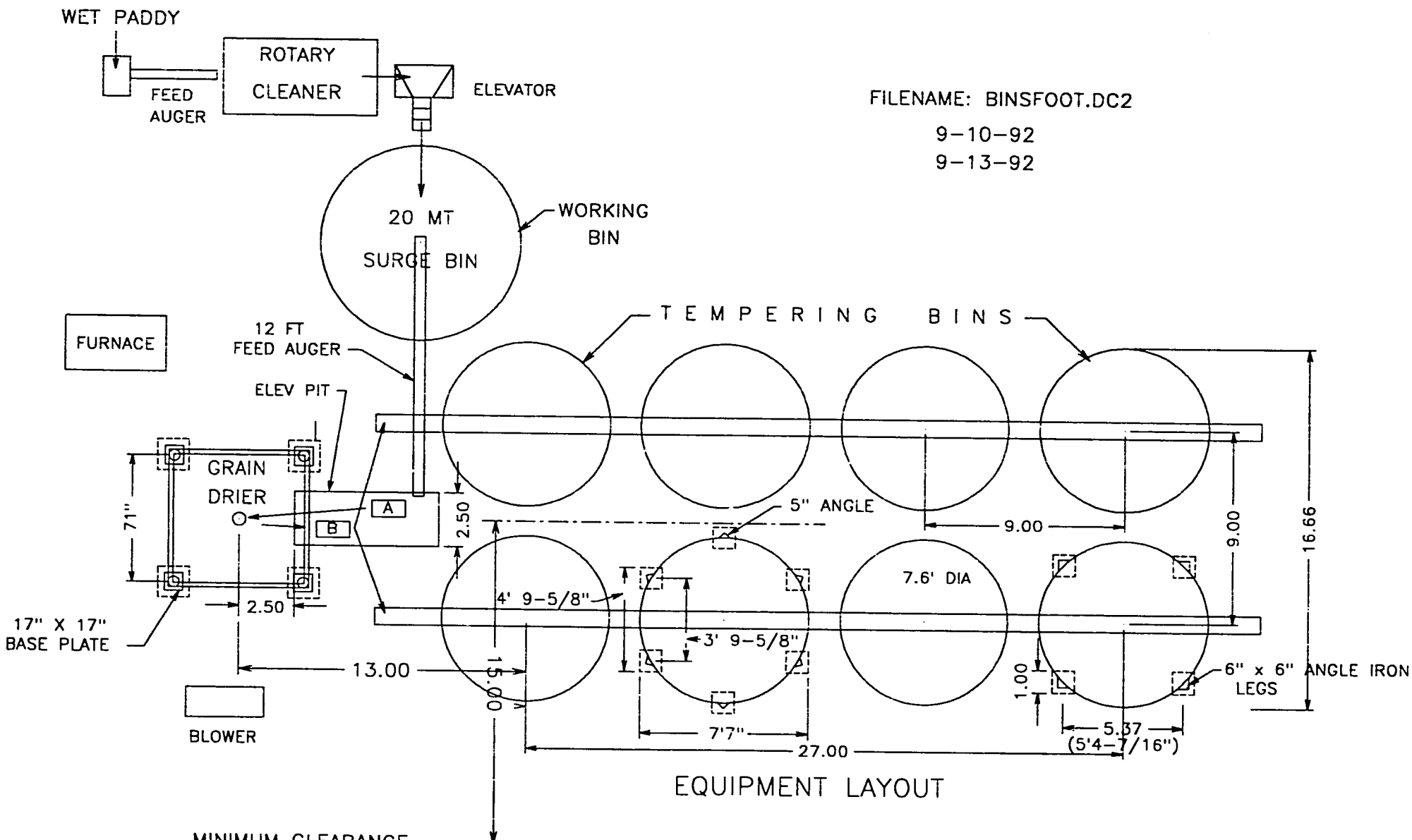
WET PADDY
FEED AUGER
ROTARY CLEANER
ELEVATOR
FILENAME: BINSFOOT.DC2
9-10-92
9-13-92
20 MT SURGE BIN
WORKING BIN
FURNACE
12 FT FEED AUGER
ELEV PIT
TEMPERING BINS
GRAIN DRIER
A
B
71"
2.50
5" ANGLE
9.00
9.00
16.66
7.6' DIA
4' 9-5/8"
3' 9-5/8"
17" X 17" BASE PLATE
2.50
13.00
15.00
1.00
6" x 6" ANGLE IRON LEGS
BLOWER
7'7"
5.37
(5'4-7/16")
27.00
EQUIPMENT LAYOUT
MINIMUM CLEARANCE

44

The completed grain dryer is now in operation. A trained operator has been hired and additional staff is being trained. Further refinements include the addition of a husk burner and additional fixed conveyors and safety devices.

The small grain pump/sweep auger combination is an efficient and practical means of turning and aerating high moisture paddy to reduce moisture levels prior to final drying in the grain dryer. Grain handling equipment can find year around use in Pakistan.

Annex VI

Publications

STDT Reports

Review of Feasibility of Bulk Wheat Handling and Storage in Pakistan, Consultants Report (October 1986)

Bulk wheat Handling and Storage Pilot Project in Pakistan (October 1987)

Impact of Fair Average Quality Procurement Procedures and No Loss Policy on Pubic Sector Storage of Wheat (December 1988)

Development Activities in the Postharvest Wheat Sector of Pakistan (May 1990)

Integrated Pest Management in Hexagonal Bins (October 1990)

Wheat Quality and Wheat Pricing (September 1991)

Integrated Pest Management of Bagged Grain in House-Type Godowns (September 1991)

Proceedings - Bulk Wheat Handling and Storage Conference, Lahore, Pakistan, June 17-19, 1991 (October 1991)

Refresher Course on Fumigation Technology, Karachi, Pakistan, October 21-24, 1991 (December 1991)

Converting a PASSCO-Type Godown for Bulk Storage (January 1992)

Design of a LSU-Type Paddy Drier (March 1992)

Proceedings of Seminar/Workshop on Grain Storage Management Research and Training (March 1992)

Insect Pest Management of Wheat Stored in Open Bulkheads, (August 1992)

Calibration of Moisture Meters for Rough Rice Using the Oven Standard Method (August 1992)

Introduction of Bulk Wheat Handling Systems in Pakistan (December 1992)

Insect Distribution and Control in Wheat-Filled Silos (December 1992)

Feed Grain Marketing in Pakistan (June 1992)

Grain Handling, Storage, and Marketing Training Manual (December 1992)

Previous Page Blank

STDT Training Manuals

Grain Grading, Handling, and Marketing of Cereal Grains (1989)

Stacking in Godowns, published in Urdu (1990)

Pest Control in Stored Grain, published in Urdu (1990)

Principal Stored Grain Insects, published in Urdu (1990)

Inspection, Housekeeping, and Godown Management, published in Urdu (1990)

Research Reports

Development of Integrated Pest Management Protocols Interim Report (PMRI Report 5, 1989)

Evaluation of Moisture Meters for Use in Food Handling Agencies In Pakistan (PMRI Report 6, 1989)

Development of Resistance in Beetle Pests of Stored Grains Against Phosphine and Contact Insecticides in Pakistan (PMRI Report 7, 1989)

Persistence of Permethrin, Primiphos methyl, Chloropyriphos Methyl Insecticides in Wheat Stored Under Simulated Environmental Conditions (Pakistan Journal of Scientific and Industrial Research, 1991)

A Simple Technique to Determine Optimal Phosphine Dosage for Grain Fumigation (Pakistan Journal of Zoology, 1991)

Papers

Role of Socioeconomics in Postharvest Issues (paper presented to Integrated Pest Management Training of Trainers Conference, PARC, 1989)

Bulk Handling and Storage of Grain: A Pakistan Experience (paper presented at the 13th Asean Technical Seminar on Grain Postharvest Technology, 1990)

A Low Cost Method for Determining Phosphine Dosage for Resistant Stored-Grain Insect Pests - A Managerial Perspective (paper presented at the 14th Asean Technical Seminar on Grain Postharvest Technology, 1991)

Importance of Grain Grading (paper presented at the Seminar/Workshop of Grain Storage Management Research and Training, 1992)

Raw Materials Handling and Storage (paper presented at the American Soybean Association Feed Technology Workshop, 1992)

Feed Grain Marketing in Pakistan (paper presented at the American Soybean Association Feed Technology Workshop, 1992)

Introduction of Bulk Grain Handling in pakistan (paper presented at the 15th ASEAN Seminar on Grain Postharvest Technology, 1992)

Other

Insect Resistance, the Next Wheat Crisis (The Econogram, 1989)