PN-ABN-262
ISN 80782

ARAB REPUBLIC OF EGYPT
MINISTRY OF AGRICULTURE & LAND RECLAMATION
AGRICULTURAL RESEARCH CENTER
NATIONAL AGRICULTURAL RESEARCH PROJECT

1988 ANNUAL REPORT MACHINERY DEVELOPMENT PROGRAM THE AGRICULTURAL MECHANIZATION RESEARCH INSTITUTE

BY

A. F. EL SAHRIGI AND A. U. KHAN

NARP PUBLICATION NO. 28

PUBLISHED IN JUNE, 1990

USAID PROJECT 263-0152

TABLE OF CONTENTS

	Credits	Page
Foreword	Dr. Ahmed Momtaz	iii
Preface	Dr. Ahmed F. El-Sahrigi	iv
I. Acknowledgments	Dr. Amir U. Khan	v
II. Summary	Dr. Amir U. Khan	1
III. Introduction and Program Strategy	Dr. Ahmed F. El-Sahrigi Dr. Amir U. Khan	2
IV. Machinery Development Projects Design Concepts and Technical Direction Overall Technical Supervision	 Dr. Amir U. Khan Eng. A. Hammam	
A. Improvement of the I.T. Trade Reaper	Eng. Y. Sharobeem Eng. El-Kholy	3
B. Adaptation of the IRRI 1.2 m Reaper	Eng. Moustafa Amin Eng. Y. Sharobeem Eng. El-Kholy	6
C. Development of the Tanta Balaadi Thresher	Dr. Amir U. Khan Eng. Ibrahim El Kersch Eng. Ahmed Osama	9
D. Improvement of the IRRI-PAK Multicrop Thresher	Eng. Magdi A. Bayoumi Eng. Abdel Mohsen	13
E. Adaptation of the IRRI-TH8 Thresher	Eng. Hanafi A. Radwan Eng. Abdul Moniem	17
F. Evaluation of the Helwan Machine Tool Co. Thresher	Eng. Hanafi A. Radwan	20
V. Drafting and Drawing Support	Eng. Horya Abdul Ghani Eng. Madyha Saber	23
VI. Work Plan 1989	Dr. Amir U. Khan Eng. Atef Hamam	23
VII. Figures in numerical order		23
VIII. Tables in numerical order		43

ABBREVIATIONS

AMRI Agricultural Mechanization Research Institute
ARC Agricultural Research Center
CRS Catholic Relief Service, Cairo
Fed Feddan (0.42 ha)
HMT Helwan Machine Tool Co.
HP Horsepower
IRRI International Rice Research Institute
ITT I.T. Trade Co.
NARP National Agricultural Research Project
PTO Power Takeoff
RMC Rice Mechanization Center, Meet El-Diba
R.P.M. or rpm Revolutions per minute
RRI Rice Research Institute, Sakha
RRTC Rice Research and Training Center, Sakha
U.S. United States of America
W. With

FOREWORD

This report documents the initiation of an important activity under the National Agricultural Research Project (NARP) that will have long-lasting and significant impacts on Egyptian agriculture. It builds on similar activities initiated in the Philippines under the International Rice Research Institute (IRRI) that already have had an important impact on rice-growing areas of the world, particularly in Southeast Asia. Adaptations were required for Egypt because small farmers in the North Delta grow both rice and wheat, and chopped wheat straw (tibn) is an important livestock feed following the wheat harvest. These farmers cannot afford to own both wheat machines and rice machines. Details are given here on how rice equipment developed elsewhere was modified to handle both rice and wheat harvests and to produce good quality tibn from the wheat straw. Further improvements have been made in 1989 and will be described in later reports.

Credits for each section of the report are shown in the table of contents.

Dr. Ahmed Momtaz
Director General, NARP

PREFACE

Experience in many developing countries indicates that agricultural machines available from the industrialized countries are often not sufficiently tailored to meet local needs. Such equipment must be modified or redesigned to suit local farming and manufacturing requirements. Some farming operations in the developing countries are such that appropriate equipment is not available at all. For such operations, development of new machines is the only recourse. With increasing mechanization of agriculture, the need for machinery design, adaptation and development has become critical in Egypt.

There is little doubt that widespread mechanization of Egyptian agriculture will necessitate a commensurate development in the local production of demand oriented farm machines. Indigenous design and development of farm machines is an excellent approach for stimulating growth in the local production of agricultural machines. The Agricultural Mechanization Research Institute (AMRI) is placing a major emphasis on machinery design and development. With the establishment of an Agricultural Machinery Development Section at AMRI, we are confident that the Institute will play an active role in developing and commercializing many useful farm machines in the country.

Dr. Ahmed F. El-Sahrigi
Director, Agricultural Mechanization
Research Institute

ACKNOWLEDGEMENTS

This is the first annual report of the Machinery Design Section of the Agricultural Mechanization Research Institute (AMRI). This section was established in early 1988 with support from the NARP program under its objectives of upgrading and improving the research capabilities of the ARC affiliated Institutions.

The encouragement provided by Dr. Ahmed Momtaz, Director General, ARC and NARP, and Dr. Ahmed F. El-Sahrigi, Director, AMRI, were highly instrumental in the establishment of the section. Dr. El-Sahrigi placed a high priority on this project and facilitated its activities at every step. A number of other AMRI colleagues helped on the different machinery development projects. Mr. Ahmed El-Behery worked closely with the NARP Agricultural Mechanization Specialist and assisted the machinery development efforts on a day-to-day basis. His knowledge of local mechanization practices and his wide contacts with researchers and manufactures were of utmost help.

A staff of ten young agricultural and mechanization engineers was assembled at AMRI for the machinery development program. They worked most diligently and productively on the different machinery development projects. The engineers put in long hours in the field under rather difficult conditions during the two harvesting seasons. The enthusiasm exhibited by the AMRI engineers, which was motivated primarily by their desire to gain machinery design and development experience, was most encouraging.

The Staff of the AMRI workshop helped in the modification of the second IRRI reaper. Messers Tanta Motors Co., Tanta, cooperated with the AMRI on the development of the AMRI-Tanta All Crop Thresher. The Company spent its own resources on the fabrication and modification of the prototype machines. Eng. Hesham Abou Frikha of Tanta Motors not only helped on the fabrication of the prototype machine but also contributed many useful ideas and suggestions.

The different machines were field tested at two locations 1) The Rice Mechanization Center (RMC), Meet El-Diba in the wheat season and 2) The Rice Research and Training Center (RRTC), Sakha, in the rice season. We sincerely appreciate the assistance provided by Eng. Ahmed Osama, Eng. Moustafa Abbas and Eng. Moustafa El-Kholy of the RMC and of Dr. M. Ballal, Dr. Fawzi Naeem and Dr. Ahmed Sarafy during the season for field evaluation and improvement of machines. Access to the facilities of these two centers was a critical factor in our efforts to develop appropriate machines for Egyptian farming conditions.

Finally I would like to express my special thanks to Mrs. Zizi Khalil Shedid who most willingly and ungrudgingly typed the numerous edited drafts of this report.

Dr. Amir U. Khan
Agricultural Mechanization Advisor
National Agricultural Research Project

1988 ANNUAL REPORT
MACHINERY DEVELOPMENT PROGRAM
THE AGRICULTURAL MACHINERY RESEARCH INSTITUTE

SUMMARY

An Agricultural Machinery Development Program was established at the Agricultural Mechanization Research Institute (AMRI) during 1988. This program is patterned after the agricultural machinery development program of the International Rice Research Institute (IRRI) in the Philippines which has been quite successful in developing local production of appropriate farm machines in many Asian countries.

An engineering design office with a staff of ten agricultural and mechanical engineers was established in AMRI. This staff is now receiving intensive hands-on training on the design and development of farm machines. Four AMRI engineers were sent to IRRI in May 1988 for training on the design and production of agricultural machines. Additional AMRI engineers are now being sent abroad for training in machinery design, drafting and industrial extension work.

The current focus of the AMRI Program is on the development of simple reapers and threshers for local production by small metal working shops in the country. Six machinery development projects were started during the year, two on reapers and four on threshers.

A 2.2-m wide tractor-mounted reaper from Pakistan and a 1.2-m self-propelled IRRI reaper from the Philippines were tested and modified for harvesting wheat and paddy in Egypt. A combination beater-axial-flow thresher was developed using the basic threshing drum of the traditional wheat threshers popular in Egypt. The traditional drum was modified such that it could be used as a beater type machine for wheat threshing and could be converted to an axial flow machine for threshing paddy. An air screen cleaning system was also added to the machine.

The new hybrid beater-axial-flow machine exhibited a highly satisfactory performance for threshing both wheat and paddy crops. Additional prototype machines are now being fabricated by Tanta Motor Co, Tanta for more extensive tests and evaluation during the 1989 wheat and paddy threshing seasons.

The IRRI-PAK multicrop thresher and the IRRI-TH8 paddy thresher were tested and modified to suit local requirements. Work was also started on testing locally manufactured Turkish wheat threshers with the eventual goal of converting these machines for threshing paddy.

A number of cooperative machinery development projects have been planned for 1989 with local machinery manufacturers. Hopefully these will lead to early introduction of appropriate locally manufactured farm machines in Egypt.

INTRODUCTION AND PROGRAM STRATEGY

The Agricultural Mechanization Research Institute (AMRI), being the principal institution for agricultural mechanization research in Egypt, is expected to play a significant role in introducing agricultural mechanization in the country. Recent experiences in India, Pakistan, Thailand and the Philippines have demonstrated that small scale production of farm machines is a critical factor in mechanizing small farm holdings. In Egypt, a lack of availability of simple low cost farm machinery designs has seriously hampered progress of local machinery manufacture and the mechanization of small farm agriculture. We believe that efforts on the design and development of demand oriented farm machines can significantly help in establishing local farm machinery production and in accelerating the mechanization of small farm holdings in the country.

Farm machinery production in Egypt is mostly undertaken by small private workshops which use rather simple tools and production technology in manufacturing. These firms are not in a position to devote resources for new machinery design and development. The AMRI can help such small scale machinery producers by providing appropriate machinery designs and technical assistance. Most small farm machinery manufacturing shops are located in the rural towns. Their growth will not only help in the mechanization of small farm agriculture but will create new employment opportunities in the rural areas.

With the above objectives in mind, a commercial style machinery development program was organized early this year in AMRI with assistance from the NARP Project. A Small Design Section (Figure 1, p.26) was established and a team of 10 engineers was assembled for design and development of machines. Additional design and drafting equipment, testing instruments and prototype fabrication equipment have been ordered through the NARP project and are expected to arrive some time during 1990.

The ultimate focus of AMRI's machinery development program is on establishing local production of the demand oriented farm machines rather than on primarily designing and developing new machines. This distinction is essential to ensure that the benefits of the AMRI research and development efforts eventually reach the end users, the farmers.

The style of machinery development which is practiced in most public engineering research institutions is generally not conducive for successful commercialization of machines. For this reason, the AMRI machinery development efforts are being patterned after the machinery research and development programs in industry. In order to facilitate commercial production, it was further decided to work cooperatively with selected local manufacturers in the development and production of demand oriented farm machines.

The key elements of the AMRI machinery development program are: a) Assessment of farmer's operational needs and machinery market de-

mands, b) Design, development and evaluation of the newly developed machines for at least two cropping seasons under realistic farm conditions, c) Provision of design and technical assistance to manufacturers in developing local production. Figure 2 shows the machinery development sequence that AMRI is following in developing machines for commercial production.

Preliminary discussions with farmers and machinery manufacturers have indicated an urgent need for machines for harvesting and threshing wheat, paddy and other major cereal crops which are popularly grown in Egypt. The AMRI machinery development program is currently focusing on these areas and has initiated two reaper and six thresher development projects. This report describes the progress achieved on these projects during 1988.

MACHINERY DEVELOPMENT PROJECTS

A. IMPROVEMENT OF THE I.T. TRADE REAPER

Harvesting cereal grain crops is a difficult operation for farmers in Egypt. In 1982 a 2.2-m wide tractor front-mounted reaper was developed in Pakistan under the IRRI-PAK Agricultural Machinery Program. This reaper was based on a vertical reaper concept that was originally developed in China. This is a simple machine which can be mounted on the front of standard 30-60 HP tractors equipped with three point hydraulic lifts. This reaper was well accepted by farmers and over 2000 of these machine were manufactured in Pakistan during its first two years of introduction, 1983-1985. Similar Chinese type vertical reapers have also started to gain wider acceptance in India.

In 1986 the Catholic Relief Service (CRS) in Cairo imported a vertical reaper from Pakistan and tested it for harvesting wheat and paddy in Egypt. This machine encountered many problems in harvesting paddy; however its performance on wheat was encouraging. In 1987 the CRS ordered eleven units of this machine from a local manufacturer, Messrs. I.T. Trade Co. (ITT), Mattria, Cairo for sale to farmers. So far only a few of the locally produced machines have been sold by CRS and most of these have encountered problems in the field.

Since this reaper is simple and looks promising for Egypt, the AMRI acquired a locally-made reaper for tests and improvements. The experience gained with this machine during the 1988 wheat and rice harvesting seasons in the Kafr El-Sheikh area and some recommendations for design improvement are included in this report.

MACHINE SPECIFICATIONS

Type	Tractor front-mounted, 2.2-m wide, Chinese type vertical reaper
Manufacturer	I.T. Trade Co., Mattarya, Cairo
Machine model	1986 ITT/CRS

Overall dimensions	Length	4100 mm
	Width	2430 mm
	Height	740 mm
Cutting width	2200 mm	
Use recommendations	Wheat, paddy and barley harvesting	
Power source	Standard 35-65 HP tractors (NASR HP Diesel Tractor was used in our tests)	
Power transmission system	Tractor rear PTO shaft connected through two B section V-belts to reaper drive shaft	
Reaper lift	Standard tractor three point hydraulic lift arms connected to reaper with steel cables and pully arrangement	

MACHINE DESCRIPTION

The 2.2-m wide machine is mounted on the front of standard tractors (Figure 3). It cuts and delivers the crop to the right hand side of the tractor in well oriented windrows. The reaper comprises three major components, 1) an oscillating cutter bar with eight divider shields, 2) a crop feeding system with seven star wheels and 3) a crop transport system with three lugged belts which deliver harvested plants to one side of the machine.

The main reaper shaft is driven from the tractor PTO shaft through two B section V-belts. A long propeller shaft, mounted under the full length of the tractor, transmits power from the rear of the tractor to the front mounted reaper through a set of universal joints and a telescopic shaft. The cutter bar drive link is connected to an eccentric pin mounted on the front end of the drive shaft reaper pulley to drive the oscillating cutter bar. The crop conveying belts are driven from the reaper main shaft through double V-belts mounted in a quarter turn position.

Seven of the crop divider shields are equipped with rotating star wheels for feeding crop to the conveyor belts. The machine has three flat conveyor belts with riveted metal lugs. The middle belt lugs engage with star wheel prongs to transfer power from the belt to the star wheels. The middle conveyor belt thus serves two purposes, one to provide power for feeding the crop to the conveyor belts and the other to transport the crop side ways. For this reason it is more heavily loaded than the two other belts.

After the star wheels feed the crop to the conveyor belts, the crop is held against the conveyor belts by steel wire springs while it is being transported side ways in a vertical position by the lugged belts. The crop is

finally ejected on the right hand side of the machine and falls perpendicular to the machine travel direction in neat windrows. The crop in the windrows has all of its panicles at one end which facilitates collecting, bundling and transport.

The I.T. Trade reaper was tested at the Rice Mechanization Center (RMC), Meet El Diba, and the Rice Research and Training Center (RRTC), Sakha, along with two self propelled reapers that were developed at IRRI in the Philippines (Figures 4 and 5).

Major Field Problems (Wheat Season)

The major problems encountered with the I.T. Trade machine during the 1988 wheat harvesting season were as follows:

(1) Excessive slippage and frequent jamming of the crop conveying belt.
(2) The conveyor belt tensioning arrangement was inconvenient to adjust in the field.
(3) The crop divider on the left side of the machine did not separate the swath well, resulting in dragging of crop around the conveyor belt.
(4) The left lifting cable interfered with the steering link arm.
(5) The crop did not drop exactly perpendicular to the travel path.

The following additional problems were encountered during the rice harvesting season:

(1) The V-belts between the PTO pully and the reaper pully had a tendency to twist whenever the load increased.
(2) The reaper drive V-belt was difficult to adjust.
(3) Paddy straw wrapped around the conveyor belt pullys at the crop outlet side.
(4) The eccentric pin driving the cutter bar broke loose from the pully.

Design Modifications

* During the wheat season, entangling of crop on the lugs of the conveyor belt at the left hand side of the machine was a problem. Two dividers bars were installed on the machine which solved this problem.

* Conveyor belt slippage: Frequent stretching of the long conveyor belts makes it difficult to maintain sufficient belt tension for adequate transmission of power. This problem is most serious with the second conveyor belt, which is subject to much higher loads. The metal back-plates of the lugs come in contact with the metal surface of the pully which further increases belt slip-page. Whenever the crop was heavy, excessive slippage of the middle belt and jamming of the conveying mechanism occurred. A number of solutions, such as increasing the conveyor belt pully diameters,

cutting grooves on conveyor belt drive pullys for accommodating lug back plates, knurling of pully surfaces, lining of pullys with rubberised surfaces, etc., will be tried in 1989 to overcome this major problem.

* The arrangement for tensioning the conveyor belts is awkward. Since belts must be adjusted frequently until fully stretched, a simpler belt tensioning system will be developed.

* The cutter bar rocker arm drive pin welded on the drive pully is too weak and will be strengthened.

* Frequent wrappage of paddy crop around the conveyor belt pullys (Figure 6) at the crop delivery end is a problem. Ejection of crop from between the belt-lugs is poor. Ejector guards were tried to positively push crop out of the lugs (Figure 7) with some success. Improved ejectors will be tested in 1989.

* The left hand lifting cable comes in contact with the tractor front wheel and interferes with proper steering. Modification will be made to relocate this cable.

* Better matching of the tractor forward travel speed and the reaper speed is needed to minimize jamming of the machine. Different drive ratios will be tested to optimize the two speeds after the conveyor-belt slippage problem has been minimized.

TEST RESULTS The results of the tests carried out on the I.T. Trade reaper and two other reapers at the RRTC, Kafr El-Shiekh Governorate, during the 1988 paddy season are given in Tables 1 and 2, p.44.

B. ADAPTATION OF THE IRRI REAPER Currently farmers with small farm holdings harvest their wheat, rice and other crops manually. Many machines have been tried for harvesting cereal grain crops on such holdings but none of these have gained much acceptance among farmers. An analysis of the current harvesting practices, and discussions with farmers and manufacturers, indicated an urgent need for simple reapers which could cut and lay crop in windrows for convenient handling and transport to threshers. Such reapers must be low in cost and suitable for production by small metal working shops.

This report describes the testing and adaptation of a 1.2-m self-propelled reaper which was developed for small farm use by the International Rice Research Institute (IRRI) in the Philippines. An earlier 1.0-m wide version of the IRRI machine, with rubber conveyor belts, was imported into Egypt by the Rice Research Institute, Sakha (RRI). A few units of this early model were fabricated by a local manufacturer, Messers I.T. Trade Co.,

Cairo. These machines have been successfully used by the RRI for nearly five years for harvesting rice.

Two units of the latest model of the IRRI reaper (1.2-m wide with crop conveying chains) were imported in 1987 by the AMRI. This report describes the experience gained with the 1.2-m wide machines in the Sakha, Meet El-Diba area during the 1988 wheat and rice harvesting season.

MACHINE SPECIFICATIONS

Type	1.2-m self-propelled Chinese type reaper
Manufacturer	Poying Welding Shop, Los Banos, Laguna, Philippines
Overall dimensions	Length 2450 mm Width 1430 mm Height 600 mm
Cutting width	1200 mm
Use recommendations	Paddy, wheat and barley harvesting
Conveying mechanism	Chain with metal lugs
Engine	Air cooled gasoline, 5 HP

MACHINE DESCRIPTION

This IRRI reaper consists of a light weight walking type self-propelled unit with two metal wheels. The unit is powered with a 5-HP air cooled gasoline engine. A 1.2-m wide cutter bar is mounted on the front of the unit. The machine cuts the crop and conveys it in vertical orientation to the right hand side of the machine where it is dropped on the ground in a windrow with the panicles falling away from the machine.

The reaping mechanism (Figure 8) consists of a cutter bar with crop dividers, fitted with star wheels which help to guide and feed the harvested crop to two side delivery roller chains equipped with metal lugs. The lugs on the conveyor chain drive the star wheels by engaging with the prongs of the star wheels. The star wheels feed the crop to the conveying chain. A series of wire springs keep the harvested crop pressed against the conveyor chain as it is conveyed side ways by the chain lugs. Crop is ejected out of the conveyor chain on the right hand side of the machine where it falls in windrows with the panicles falling away from the machine (Figures 9 and 10).

PRELIMINARY ADAPTATION OF THE IRRI MACHINE

On the basis of experience gained with the earlier version of the IRRI machine, a number of modifications were carried out on the 1.2-m IRRI machine before the 1988 wheat harvest. These modifications were done in several stages and are summarized below:

(1) The machine was originally designed to cut the paddy crop at a higher level than that desired by farmers in Egypt. Wheat straw is used as fodder and consequently farmers prefer to harvest it close to the ground. The cutter bar of the IRRI machine was mounted on a thick square box frame which did not permit getting too close to the ground. The box frame was replaced with a thinner section box which reduced the crop cutting height.

(2) The hitching between the reaper and the power tiller was not convenient for adjusting the cutter bar attack angle. A new three point hitch arrangement, with two fixed lower links and one adjustable top link, was developed. This arrangement permits adjustment of the cutter bar angle with respect to the ground surface.

(3) The IRRI machine was equipped with two cage wheels with steel lugs which created excessive vibration. The wheels were replaced with small diameter rubber tired wheels, size 435 x 180 cm, which were similar to the ones used on the Kubota reapers.

(4) The star wheels did not rotate freely due to interference with the divider covers. Adding a washer between the divider cover and star wheels reduced this interference.

Problems Encountered in the Field

(1) Frequent jamming of the conveying chain due to wrappage of crop around the star wheel at the crop delivery end was a problem. A sloping sheet metal ejector guide was installed to minimize this problem.

(2) With thick heavy growth, crop was not conveyed well, resulting in accumulation of crop on the chain. It was felt that the forward travel speed of the machine was too high for satisfactory cutting and conveying. The machine forward travel speed was 4.7 km/hr, which was also high for convenient walking of the operator in the field. After considerable experimentation, the machine forward travel speed was reduced by 40% and the reaper speed was increased by 30% to achieve satisfactory performance. The following size pullys were needed to achieve the above speeds:

Pully type	Diameter	
	Inches	Equiv. cm
Engine	3.5	9
Transmission input	16.0	41
Reaper drive	7.0	18
Reaper driven	3.5	9

The travel speed of the modified machine with rubber tired wheels on concrete surface is 2.8 km/hr.

TESTS RESULTS Three different reapers were tested at the RRTC, Sakha, and the RMC, Meet El Diba, in Kafr El-Sheikh Governorate. The results of the comparative tests are given in tables 1 and 2.

RECOMMENDATIONS FOR FURTHER WORK The IRRI reaper works well with a low density crop. It can harvest paddy at 4.8 km/hr in the tropical rice producing countries. Under Egyptian conditions, however, crop growth is too dense and the machine has difficulty in handling such crops. Improvements are needed to prevent jamming of crop in the conveying mechanism. The drive ratio between the forward travel and reaper cutting speed needs further study. Interference between the star wheels and the conveyor chain lugs and wrappage of crop on the conveying chain are problems which still need further attention. The following modifications should be tried in the 1989 crop harvesting season:

(1) Replacement of the 5-HP engine with a 6-8 HP engine

(2) Modifying the drive belt clutch mechanism to prevent creeping of the machine when the clutch is disengaged

(3) Optimization of the machine forward travel and the reaper cutting speeds

(4) The imported rubber wheels are too costly and are not available locally. New metal wheels need to be developed with spiral lugs to reduce vibrations during travel. Such wheels would be cheaper and could be manufactured locally.

C. TANTA BALAADI THRESHER

In most irrigated areas of the semi-arid and arid developing countries, wheat or barley are popularly grown in rotation with paddy, beans or other cereal grains. Wheat and barley straw is widely used in such countries for animal feed. Tenderized straw or hay is popularly known as "tibn" in Egypt or "bhoosa" in India and Pakistan. Since wheat and barley straw is brittle at harvest time, it can be easily tenderized by the severe beating action of special beater type threshers that are popular in countries such as Egypt, Turkey, Pakistan, India, Bangladesh, etc. The beater type wheat threshers do not have a separate outlet for straw in the concave. Straw is retained between the drum and concave until throughly chopped and pulverized before it is ejected through the small perforations in the concave. Generally the size of the concave perforations control the degree of fineness of the tibn (bhoosa).

Paddy rice is a crop with highly fibrous straw which cannot be chopped or tenderized easily. For this reason beater type threshers cannot be used for threshing paddy. Similarly sunflower is another crop with cobs which are difficult to pulverize and cannot be threshed with beater type threshers. In recent years, axial flow threshers, which have a separate

straw outlet in the concave, have gained much popularity in the Asian countries for threshing rice, sunflower, etc. In such machines, only grain and fine impurities pass through the small concave perforations whereas straw or cobs are ejected from the large straw openings. Figure 11 illustrates the flow of threshed material (grain and straw) in the two types of threshers.

Farmers generally do not have the resources to purchase or hire separate machines for threshing wheat and paddy. Since wheat is a more difficult crop to thresh, mechanical threshing of wheat has gained popularity in countries such as Egypt, India, Pakistan, Turkey, etc. Paddy however continues to be threshed manually or by treading under animals or tractors. This requires much labor and results in excessive grain losses. Timely completion of threshing is also difficult as it is the busiest time for farmers. For these reasons all-crop threshers, which could thresh both paddy and wheat and also make tibn or bhoosa from wheat straw, could find a large market in the arid and semi-arid developing countries.

Historical Development of Threshers in Egypt

During the early stages of mechanization, simple tractor PTO powered beater type threshing drums gained much popularity in Egypt for threshing wheat. These threshers consisted primarily of a single threshing drum (Figure 12) with flat radial knives rotating in a perforated semicircular concave. Crop was fed at the upper end of the drum and the threshed grain and chopped bruised straw fell through the concave perforations. This machine did not have any mechanisms to separate grain from the tibn. It was however very simple and easy to fabricate by local shops.

About five years ago, new beater type wheat threshers started to be imported from Turkey. The Turkish wheat threshers also had a beater type threshing drum and concave but had the added feature of a built-in screen/air separating and cleaning system. The Turkish threshers have now gained widespread popularly in Egypt and are being locally manufacturerd. A large number of the old beater type threshing drums however continue to be used in the country.

The main reason for the rapid popularly of the Turkish wheat threshers was their ability to separate and clean grain from tibn. The Turkish wheat threshers are rather heavy and bulky, weighing around 1300 kg, and sell for LE 5500 to 6000 (roughly 2150 U.S. dollars). These machines can only be used for threshing three crops, wheat, barley and beans. Threshing of the other crops such as paddy, soybean, sunflower, etc., is still a serious problem for Egyptian farmers.

The Machinery Development Program of the AMRI is now devoting special attention to the development of universal threshers for all the major cereal crops grown in Egypt. In order to establish specific criteria for appropriate threshers for Egyptian conditions, a brief market study was conducted in the Nile Delta and a set of design specifications was

developed. These specifications are presented in Table 3. The AMRI engineering team is now being guided by this set of criteria in the development of appropriate threshers for Egypt.

One of the main conclusions of the market study was that improvement of existing beater type threshing drums by the addition of grain cleaning mechanisms and adding paddy threshing capabilities would be widely accepted by farmers. Such an approach will not only provide a multicrop thresher but would also result in substantial savings for farmers who already own beater type threshing drums. It was therefore decided to try to convert the convential beater type wheat threshing drum for axial flow threshing of paddy. This offered exciting possibilities for developing a single universal thresher for almost all the cereal crops that are grown in Egypt.

The Axial Flow Thresher Concept

In the axial flow machines, Figure 11, threshed material is spiralled between the threshing drum and the concave for a number of times. This provides longer crop retention in the machine as compared with conventional threshers. Longer duration threshing at lower impact levels results in more through threshing and less grain damage. Use of the peg tooth type threshing drums in the axial flow paddy threshers minimizes the need for close drum concave clearances and this also reduces grain damage. After threshing, the crop continues to spiral through the separating section of the concave where grain is separated out of the straw. While moving spirally, threshed material is subjected to centrifugal force which facilities grain-straw separation through the concave. The axial flow concept thus eliminates the need for costly straw walkers and bulky grain separating and cleaning mechanisms that are popularly used with conventional threshers.

Since the facilities for prototype fabrication at AMRI are still not well developed, selected manufacturers were approached to cooperate in the development of a universal threshing machine. It was felt that manufacturers would also provide many practical ideas and useful suggestions in the development of such a machine as they have a better understanding of the market. Manufacturers would also be willing to fabricate the prototype machines free of costs to AMRI. Since commercialization of machinery designs originating from public research institutions is a major problem, early involvement of manufacturers in machinery development will also expedite commercialization.

Messers Behera and Co., Alexandria, a public sector company, and Messers Tanta Motors Co., Tanta, a private sector company, are two leading firms who were manufacturing beater type threshing drums in Egypt. These firms were elected for cooperative thresher development programs by AMRI. After three months of cooperative work with Behera and Co. it was felt that progress was too slow for catching the 1988 wheat threshing season. It was therefore decided to focus AMRI's efforts on the development of an all-crop thresher with Tanta Motors Co. for testing in

the 1988 wheat and paddy seasons. This report describes the progress on installing an air-screen cleaning system for the beater type wheat threshing drum and on incorporating axial flow threshing features for threshing paddy.

Design and Development Activities

Wheat Threshing Season

For the 1988 wheat season an air-screen cleaner was designed and installed under the wheat threshing drum (Figures 13-14). The cleaner has a flat oscillating screen mounted on four links. The links are at a 70-degree angle with the horizontal which helps to kick and move the material over the flat screen. Two centrifugal blowers are installed below the screen to provide a blast of air for removing chaff and lighter impurities as grain falls through the screen. The air is controlled by shutters on the blower inlets. Air from the blowers is directed partly through the screen which helps to fluidize the material flowing on top of the screen. Grain falling through the screen drops on the grain pan, which is also mounted on four links with a slope opposite to that of the screen. The pan link angles are designed such that clean grain is kicked in an opposite direction to the movement of the threshed material over the screen. Clean grain moves over the pan and is delivered to the rear of the machine through a sloping grain spout.

Paddy Threshing Season

A number of design modifications were made to the beater type wheat threshing drum to convert it for axial flow operation (Figure 15). The major modifications were:

(1) Addition of a bar type paddy concave next to the perforated wheat concave.

(2) Provision of a door on the paddy concave to block it completely when threshing wheat.

(3) Installation of a set of louvers with adjustable angles of 75 to 90 degrees from the drum axis in the drum cover to vary degree of axial movement of crop material.

(4) Installation of a door to partially block the feed opening for feeding crop at one end of the threshing drum when threshing paddy.

(5) Opening of a straw outlet in the concave at the opposite end from the feed opening and installation of a door to close the straw outlet while threshing wheat.

With the above modifications, it was possible to convert the beater type wheat threshing drum to an axial flow paddy threshing mode in the following four steps:

Adjusting the louver angle to the 75-degree setting
Opening the straw thrower outlet door

Opening of the door on the paddy concave
Blocking part of the feed opening by the feed opening door

Tests indicate that the modified machine can function well in a beater threshing mode for wheat and can be quickly converted to an axial flow mode for threshing paddy. This convertible machine was repeatedly tested and improved for threshing wheat and paddy (Figures 16 and 17) at the RRTC, Sakha. The threshing performance obtained with paddy is given in Table 4. Additional improvements are being incorporated and the machine will be further evaluated and improved during the 1989 harvest seasons.

D. IMPROVEMENT OF THE IRRI-PAK MULTICROP THRESHER

Some years ago a multicrop axial flow thresher was developed by the IRRI-PAK Program in Pakistan for threshing paddy and wheat. This machine had fodder (tibn or bhoosa)-making capabilities. This thresher (Figure 18) was powered from 35-60 HP tractor PTO shafts and had many innovative design features. One unit of the IRRI-PAK multicrop thresher was imported into Egypt in 1981 by the RRI, Sakha. This machine has been used successfully for threshing paddy and beans for the last six years at the RRI. A second machine was recently imported by the AMRI under the NARP program for testing and evaluation in the country (Figure 21).

MACHINE SPECIFICATIONS

A) GENERAL

Type	Tractor PTO powered throw-in type axial flow thresher
Manufacturer	IRRI, Los Banos, Laguna, Philippines
Machine model	IRRI-PAK PTH-30
Use recommendations	Wheat, paddy, barley, sunflower and other small cereal grain crops
Overall Dimensions	
Length	400 cm
Width	190 cm
Height	175 cm
Weight	1445 kg
Power source	35 to 65 HP tractors (A Ford 60-HP tractor was used in tests)
Power transmission	Tractor PTO shaft connected to the system threshing drum shaft through three C section V belts

B) THRESHING DRUM

Type	Spike tooth
Drum diameter	66.8 cm
Drum length	Total: 154 cm (41 cm for threshing, 16 cm for separating and 16 cm for straw throwing)
Threshing pegs, No. and size	84, Size 7.5 cm long x 1.87 cm diameter
Straw chopping knives, No. and size	90, Size 125 cm long x 3.75 cm wide 0.625 cm thick

Rated drum speeds

Crop	Drum revolutions/minute	Drum peripheral velocity (meters/minute)
Wheat	600-700	1259-1469
Paddy	450-550	944-1154
Sunflower	350-400	734-839
Soybean	400-500	839-1049

C) CONCAVE

Type and material	Bar type, round steel bars, 6.25 mm diameter
Space between bars	Threshing section, 6 mm Separating section, 9 mm Straw thrower section, 15 mm
Concave area	Threshing 24 x 41.25 = 1031 cm^2 Separating 37 x 96.25 = 3561 cm^2 Straw threshing 25 x 16.25 = 406 cm^2

D) GRAIN CLEANING SYSTEM

Type	Air screen asperating-type cleaner
Screen	Flat oscillating perforated sheet
Screen size (upper)	14.700 cm^2 (245 cm long, 60 cm wide)

Screen hole sizes	Upper, 20 mm diameter circular holes Lower, 12 mm diameter circular holes
Screen slope	15 degrees
Winnowing fan	Centrifugal aspirating fan with two suction inlets
Fan size	Diameter 87.5 cm, width 30 cm
Blower blades	Four blades radially mounted
Suction adjustment	Sliding shutters on both aspiration ducts

E) FEEDING TRAY

Shape	Funnel shaped with 15-degree sloping bottom
Width, wider end	62 cm
Width, narrower end	49 cm
Length	80 cm
Feeding height from ground	125 cm

MACHINE DESCRIPTION

The IRRI-PAK Axial Flow Thresher (Figures 19 and 20) has three major components: (1) the threshing drum-concave assembly, (2) the oscillating screen assembly and (3) the aspiration fan and suction duct assembly. It has a 152.5-cm long threshing drum rotating in a semicircular concave. The threshing drum cover has 10 spiral louvers which move the threshed material along the axis of the threshing drum. The drum concave assembly has three separate sections: (1) for threshing, (2) for separating grain from straw and (3) for ejecting straw out of the machine. The threshing portion has round pegs on the drum and smaller clearance in the concave bars to permit longer retention of crop for complete threshing. The central separating section has bars spaced further apart on the concave to quickly separate grain from straw. Straw chopping knives are arranged spirally in this section on the drum to chop and bruise straw for tenderizing. The third section has straw throwing paddles on the drum to eject the threshed straw out of the machine.

The oscillating screen assembly consists of an almost horizontally placed upper screen with 16 mm diameter holes to separate large chaff and grain. A second parallel screen with 9 mm diameter holes is mounted 10 cm below the upper screen to provide additional separation. A sheet metal pan with 2 mm diameter holes is installed below the second screen to

remove fine dust. The whole screen assembly is mounted on four links and is oscillated at 340-350 rpm, with a 19 mm stroke from an eccentric. The screen mounting links make a 55 to 62.5° angle with the horizontal to provide sufficient kick to the grain for movement on the almost horizontal screen. As the material moves over the screen, grain drops onto the grain pan where it moves towards the rear of the machine for aspiration.

The aspiration fan and duct assembly consists of a four bladed fan, mounted directly on the threshing drum shaft. The fan is enclosed in a housing with two suction ducts, the front and the rear. The front duct picks the larger straw pieces moving over the upper screen. The rear suction duct is divided into two suction spouts, one to pick up small chaff flowing over the second screen and the other to pick up light airborne impurities from grain as it flows over the pan to the grain delivery spout. Air vents with control louvers are provided on the front and rear suction ducts to adjust the degree of suction at the spouts.

The thresher has a simple power transmission system. Power from the tractor is fed to the thresher counter shaft through a connecting PTO shaft. The counter shaft drives the threshing drum shaft with three B-section belts. The pullys on the counter shaft and the threshing drum can be interchanged to provide the 600-700 and 450-550 rpm threshing drum speeds needed for threshing wheat and paddy respectively.

The oscillating screen assembly is driven independently from the thresher counter shaft through V-belts to maintain a constant screen oscillation, irrespective of the threshing drum speed. The aspirator fan is mounted at the rear of the machine directly on the threshing drum shaft. This simplifies the thresher design and minimizes service problems associated with fan drives.

PRELIMINARY TESTS AND MODIFICATIONS

(1) The machine was tried for threshing sunflower. Its flat feeding table was suitable for feeding crops such as wheat and paddy but did not have enough slope for proper feeding of crops such as sunflower. A funnel shape, with a 15-degree bottom slope (Figure 22), worked well for feeding sunflower. Preliminary tests with sunflower however indicated a need for greater air suction to improve cleaning quality.

(2) Tests conducted with paddy rice indicated excessive grain being lost with straw. To minimize this grain loss, the concave bar spacing in the part of the separating section was increased from 10 mm to 20 mm (Figure 23) which minimized the grain loss with straw.

(3) During the preliminary tests, some grain was flowing over the small screen mounted on the grain spout. The screen holes were increased from 11 mm diameter to 20 mm diameter on part of this screen which solved the problem (Figure 24).

(4) The results of the threshing tests conducted on paddy and soybean are given in Tables 5, 6, 7 and 8.

E. ADAPTATION OF THE IRRI-TH8 THRESHER

In Egypt, mechanical threshing of paddy is not yet popular. Paddy is threshed either manually by beating against some objects or by driving animals or tractors round and round over crop spread on the ground. While treading paddy crop under animals or tractors is not an efficent method, it is popular as farmers do not have to purchase special machines for threshing paddy.

Postharvest losses in paddy production are generally high in Egypt. These have been estimated to range from 10 to 22%. Introduction of efficient paddy threshers can save a substantial amount of labor and grain losses in the country. For this reason, testing, evaluation and manufacturing of simple threshers is being given a high priority by the AMRI.

Some years ago, the IRRI in the Philippines developed a range of axial flow rice threshers which have become popular in the South and Southeast Asian countries. A few of the IRRI threshers were imported into Egypt by the RRI, Sakha. These machines have been successfully used for threshing rice at the RRI. The model IRRI-TH8 thresher (Figure 25(A)), which is the most popular IRRI thresher, was selected for extensive testing and adaptation under Egyptian conditions.

MACHINE SPECIFICATIONS

A) GENERAL	Type	Engine powered throw-in type axial flow thresher
	Manufacturer	Poying Welding Shop, Los Banos, Manila, Philippines
	Machine model	IRRI-TH8
	Overall dimensions	
	Length	190 cm
	Width	150 cm
	Height	178 cm
	Use recommendation	Paddy threshing
	Weight	465 kg
	Power source	10 HP air cooled gasoline engine
B) THRESHING DRUM	Type	Spike tooth, open cage

	Drum diameter	39.4 cm
	Drum length	111 cm
	Number and size of spike	96 round pegs, 12 mm diameter, 5.7 cm long
	Rated drum speed	550 - 600 rpm
c) *CONCAVE*	Type	Bar-type circular concave with round steel bars, 5.4 mm diameter spaced 15.6 mm apart
D) *GRAIN CLEANING SYSTEM*	Type	Air-screen blower-type cleaner, with two screens
	Screen size	32 m^2 perforated sheet screen with 12 mm round holes
	Air blowers	Dual centrifugal type Blower diameter 31.5 cm Blower width36.0 cm each
	Air control	Adjustable shutters on all four blower intakes
E) *FEED OPENING*	Size	30 cm wide, 20 cm high
	Feeding height from ground	124 cm

MACHINE DESCRIPTION

The IRRI-TH8 axial flow thresher consists of a long threshing drum with a full length semicircular concave. The concave is made from 5.4 mm diameter round bars spaced 15.6 mm apart. The concave has three sections: one for threshing, one for separating and one for straw throwing. The threshing portion of the concave is fitted with a bank of stationary counter pegs, to provide more aggressive threshing action. The whole concave assembly is bolted to the thresher frame for easy removal and repair. The thresher concave has a feed opening at one end and a straw thrower outlet on the other end. The drum cover has six spiral louvers which move the threshed material axially during threshing. As the crop moves axially between the drum and the concave, preliminary separation of the grain and straw occurs at the concave. By the time, the threshed material reaches the straw outlet, all grain has been separated out of the straw. Straw is finally ejected out of the straw outlet.

Grain mixed with some small straw pieces which drop from the concave are separated at the oscillating screens. The screens are mounted on four links and are oscillated with a 30 mm long stroke through a belt and crank assembly at a speed of 350 strokes per minute.

The portion of the upper screen assembly, directly under the concave, is of solid corrugated sheet. This prevents passage of short straw pieces that fall from the concave in a vertical orientation. The solid portion collects the falling material and lays it flat before it moves over the oscillating screen. As the grain drops through the screens, light airborne impurities are removed by the winnowing action of the two air blowers. Clean grain finally drops into an auger which transports it to the grain outlet.

The machine received from the Philippines had two flat screens which oscillated in opposite directions and had an auger to transport grain to the rear of the machine. The double screen cleaning system was complicated and costly to produce. The following modifications (Figures 25 and 26) were carried out at AMRI to simplify the original design and reduce its costs:

(1) The second screen with the mounting links, auger and wind board were replaced with a simple oscillating grain pan with a sloping spout. This performed well for collecting and delivering grain to the rear of the machine.

(2) A counter shaft was mounted in place of the auger shaft to drive the screen and grain pan at 350 oscillations per minute in opposite directions.

Summary of Results

The results of the five threshing tests are given in table 9. The following were the main findings:

(1) A maximum paddy threshing output of 984 kg/hr was obtained at a threshing drum speed of 700 rpm. Average threshing output of 1 ton/hr can be easily achieved by the machine, especially with the short IRRI varieties.

(2) The grain cleaning efficiency ranged for 98.7 to 98.9%.

(3) The total grain losses ranged from 2.0 to 2.5%. Minimum loss was observed at the 550 rpm threshing drum speed.

(4) Excessive slippage of the screen drive belt was observed. When the threshing drum speed was increased from 500 to 700 rpm (140%), the screen speed increased from 300 to 365 or only 120%.

(5) The separation loss, i.e., grain going out with straw from the straw outlet, was generally very low (0.07 to 0.12%).

(6) The blower-screen loss was much higher (2.0 to 2.5%). Reducing the screen drive belt slippage and better air control will reduce this loss.

(7) Wrappage of straw on the threshing drum and engine overloading were observed when threshing wet paddy.

CONCLUSIONS AND RECOMMENDATIONS

Threshing output of the IRRI-TH8 thresher with paddy ranged from 672 to 984 kg of grain per hour with 98 to 99% cleaning purity. This was a satisfactory performance. The optimum threshing drum speed was found to be 620 rpm. The machine however had some design and fabrication defects which need the following modifications:

(1) Belt tensioners for the screen drive and fans should be added.

(2) Grain spills over one side of the grain spout (Figure 27). The slope of the grain spout needs to be increased to 15% to improve grain flow and eliminate spillage.

(3) Air control shutters are poorly fabricated and are not effective. These need to be redesigned.

(4) Threshed grain and some straw accumulates on top of the screen (Figure 26) as material does not move aggressively over the screen. Increasing the slope of the screen, modifying the screen mounting link angles, and directing part of the air blast through the screen could improve the movement of material.

(5) Wrappage of straw occurs on the threshing drum shaft at the feed end (Figure 28). A straw flinger is needed.

F. EVALUATION OF THE HELWAN MACHINE TOOL CO. TURKISH THRESHER

Mechanical threshing of wheat has gained widspread popularly in Egypt. About five years ago wheat threshers from Turkey started to be imported in the country. These threshers have beater type threshing drums which are similar to the conventional threshing drums. These machines also have aspiration type air screen systems for separating and cleaning grain from tibn. The imported Turkish machines have gained rapid popularity during the last few years and some local firms have started production in Egypt. This report discusses the results of tests conducted on an early production model of the Turkish thresher manufactured in Egypt by The Helwan Machine Tool Co. (HMT) (Figure 29).

MACHINE SPECIFICATIONS

A) GENERAL

Type	Turkish wheat thresher
Machine model	HMT/1987

	Manufacturer	Helwan Machine Tool Company, Helwan
	Overall dimensions	
	Length	2300 mm
	Width	2090 mm
	Height	2350 mm
	Use recommendations	Wheat, beans, alfalfa, sesame and barley threshing
	Weight	1300 kg
	Power source	35-65 HP tractor PTO shaft belt pully
	Manufacture's claimed output	Wheat - 1000 kg/hr
B) THRESHING DRUM	Type	Beater
	Drum diameter	675 mm
	Drum length	1180 mm
	Rated drum revolutions	450 - 850 rpm
	Knives	44 knives 290 mm long x 8 mm thick
E) FEED OPENING	Length	Full drum length - 1180 mm
	Width	420 mm
C) CONCAVE	Type	Perforated sheet metal, 3 mm thick
	Concave perforations	20 mm diameter circular holes for beans 12-14 mm diameter circular holes for wheat, barley, sesame and alfalfa
D) AIRSCREEN CLEANER	Screen hole size	Wheat and barley - 6-8 mm diameter holes Beans - 14 mm diameter holes Alfalfa - 3 mm diameter holes Dirt - 3 mm diameter holes
	Aspirating fan details	Diameter, 50 cm Width, 30 cm

F)	GRAIN BAGGER	Type	Pneumatic elevator with cyclone separator
		Fan details	Diameter, 45 cm Width, 8 cm
G)	LABOR REQUIREMENTS		Total crew - four men One for feeding Two for handling crop One for bagging and transporting grain

DISCUSSION OF RESULTS AND CONCLUSIONS

Tests were conducted during the 1988 wheat harvesting season at the RMC farm at Meet El-Diba. The machine could not be operated for too long as the pneumatic grain elevator could not transport grain when threshing at full capacity (Figure 30). Test data on the preliminary trials conducted on the machine is given in Table 10.

The output of the machine is satisfactory but some aspects need improvement. These are summarized below:

(1) The bagging system does not function well because of insufficient air blast from the fan. The fan diameter needs to be increased.

(2) The tibn was very fine, as straw is excessively pulverised and powdered. This consumes much power. Increasing the concave hole size can increase tibn size and reduce powdering of straw.

(3) There was too much blow back of wheat straw from the feed opening which is injurious for the operator. Reducing the feed opening width can minimize this problem.

RECOMMENDATION FOR FUTURE WORK

(1) Test the machine more thoroughly with different concave holes (14 and 20 mm) and at different drum and fan speeds to establish optimum operational parameters.

(2) Survey farmers who used these machines during the 1988 season to assess the problems encountered and to evaluate design weaknesses.

(3) Study the design difference between the popular Al-Shams Turkish thresher made by Tanta Motors Co. and the HMT thresher.

(4) Prepare an economic analysis of the machine and develop breakeven points for economic operation.

DRAFTING AND DRAWING SUPPORT

A small engineering drafting group has been organized in the AMRI machinery development section for providing drawing and drafting support to machinery development projects which are being undertaken outside the section. Two engineers are being trained in engineering drafting practices. Limited drafting support was provided to the following NARP supported AMRI projects

(1) Development of machinery for harvesting and threshing oil crops for use on small farms.

(2) Development of machinery for harvesting tuber and bulb crops with emphasis on potato and onions.

Preliminary engineering drawings of a prototype sunflower thresher and a potato digger were prepared. The drafting group also assisted the multicrop harvester and thresher development projects that are currently being undertaken in the Machinery Development Section.

WORK PLAN 1989

REAPER DEVELOPMENT

There are still many technical problems with the I.T. Trade and IRRI reapers which need resolution. These two machines will be further tested and improved during the 1989 wheat and rice harvesting seasons. Cooperative work will be started with at least one manufacturer to fabricate a few units of the improved tractor mounted reaper for more extensive testing in the country.

THRESHER DEVELOPMENTS

Efforts to develop universal all crop threshers will continue to receive major attention from the program. A number of prototype units will be procured of the Tanta Motors All Crop Thresher for more extensive tests, evaluation and demonstration on different crops.

Work on adapting the IRRI-PAK thresher for improved tibn making will be continued. This machine has demonstrated excellent performance on rice. It will be evaluated for threshing the other popular Egyptian crops.

The IRRI-PAK and TH8 threshers will be further modified for dual mode operations, axial flow for rice and beater type for wheat. A locally manufactured diesel engine will be mounted on this machine and thresher performance will be evaluated on a variety of crops.

A cooperative all crop thresher development project will be started with M/S Mabrouk and Co. using an aspiration systems for grain cleaning.

This company has shown keen interest in manufacturing such a machine.

The Helwan Machine Tool Co. has started the production of Turkish type wheat threshers. They have expressed a desire to convert their thresher for threshing paddy. Another manufacture, M/S Gabr and Co of Tanta, who is also manufacturing Turkish threshers would like to convert their machine for paddy and other crops. The beater type Turkish threshers would be modified for axial flow operations for threshing rice, sunflower and maize.

M/S Behera and Company, Alexandria, with whom AMRI had started its first cooperative thresher development project in 1988 and which was discontinued, has requested assistance in improving their wheat thresher. Work will be to assist Behera and Co. on thresher development and on any new projects that may be mutually agreed upon.

FIGURES IN NUMERICAL ORDER

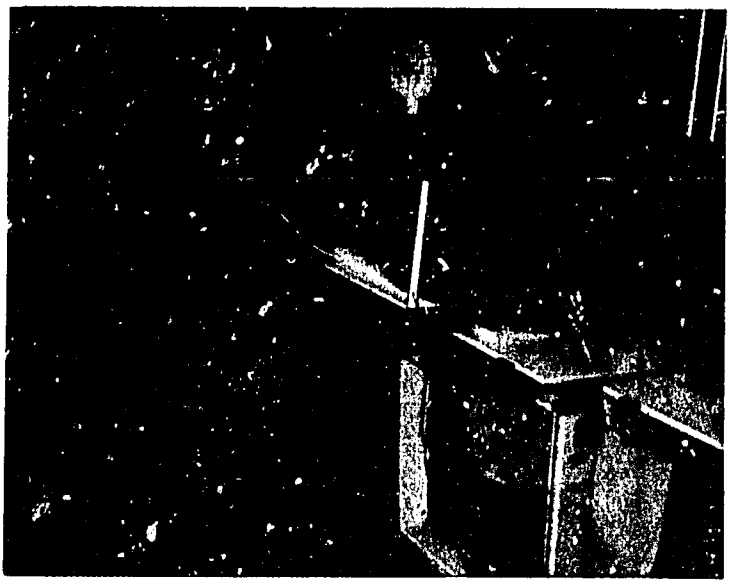

Fig 1. Recently established engineering Design Office at AMRI.

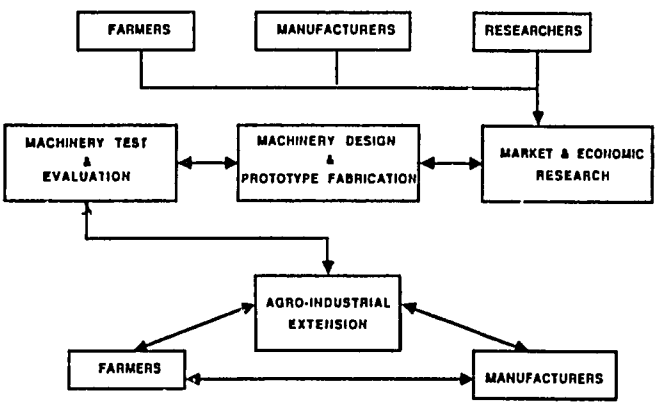

Fig 2. Proposed machinery development Sequence in the Agricultural Mechanization Research Institute.

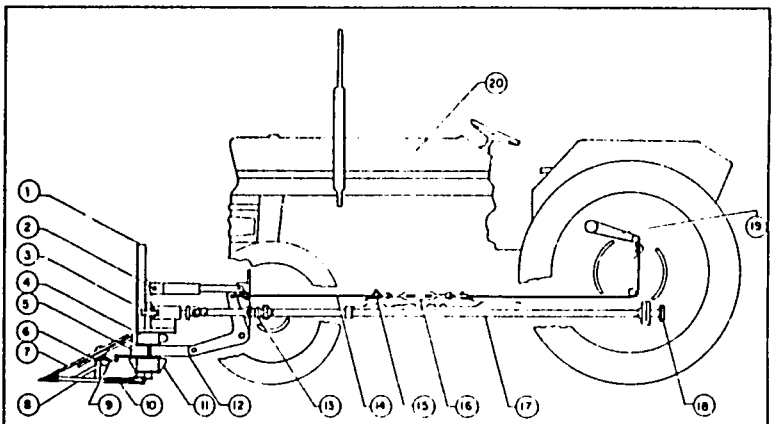

1	Super structure	6	Star wheel	11	Lugs and flat belt	16	Turn buckle
2	Upper telescopic link	7	Header shield	12	Lower link	17	Main drive shaft
3	V-groove pulley	8	Header	13	Universal joint	18	Counter pulley
4	Flat pulley	9	Spring	14	Wire rope	19	Tractor link
5	Deflector	10	Cutter bar and guard	15	U-clamp	20	Tractor

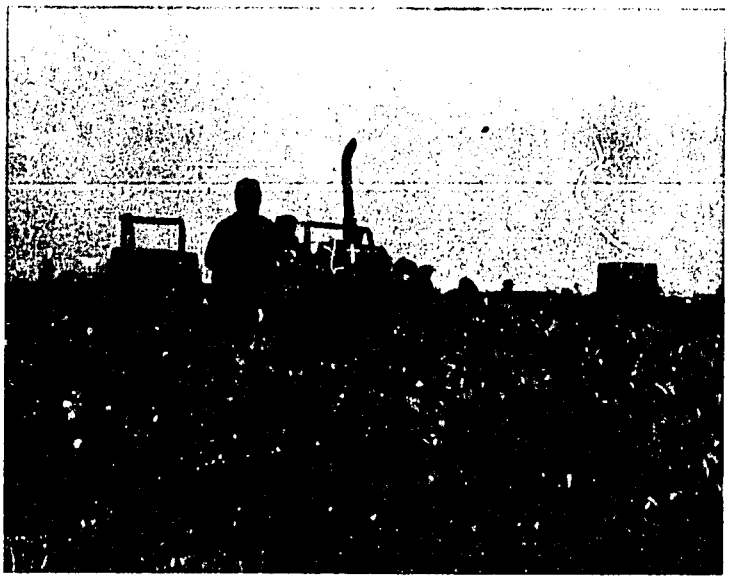

Fig 4. Harvesting wheat with the I.T. Trade reaper.

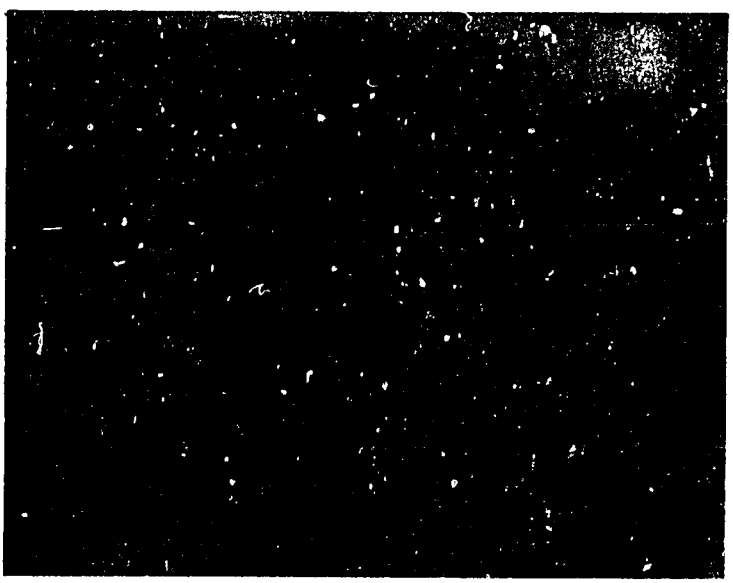

Fig 5. Rear view of the I.T. Trade Reaper showing harvested paddy crop.

Fig 6. Paddy straw wrapped around the conveyor shaft near crop outlet.

Fig 7. Ejector guards tested for positive ejection of conveyor belt lugs.

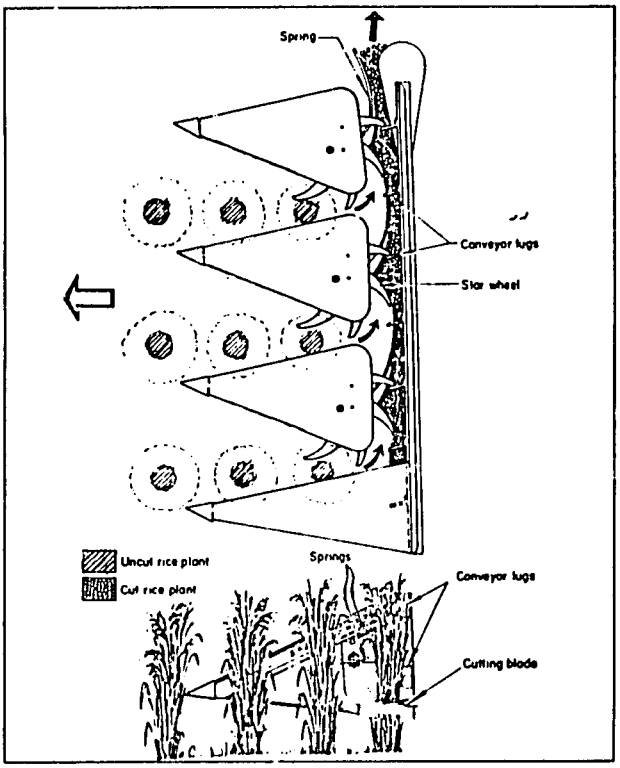

Fig 8. Major components of the reaping mechanism of the IRR self propelled reaper.

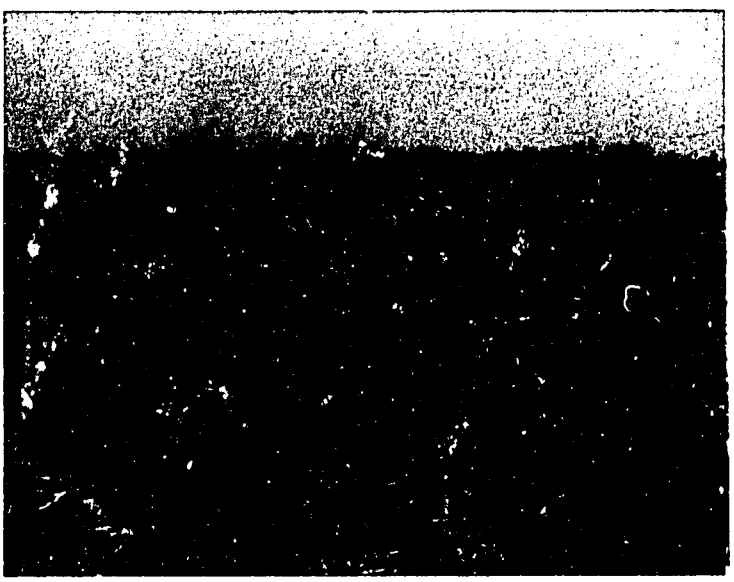

Fig 9. The IRRI reaper being tested for harvesting wheat.

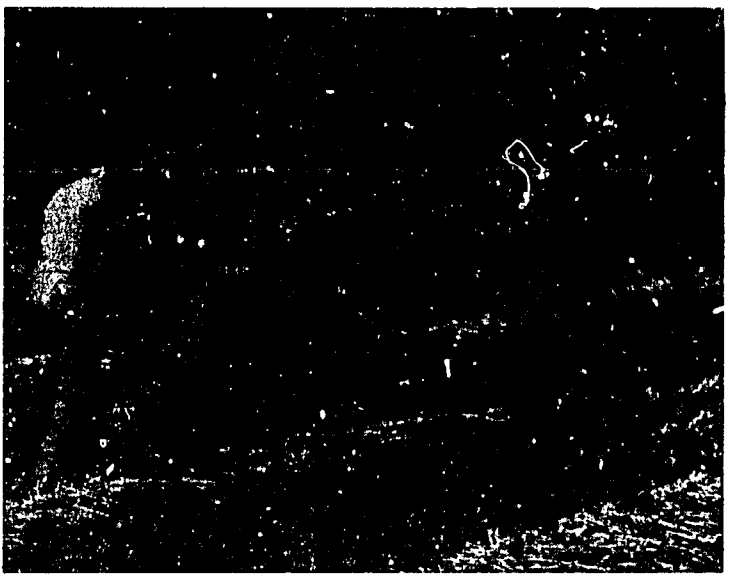

Fig 10. The IRRI reaper being tested on paddy crop.

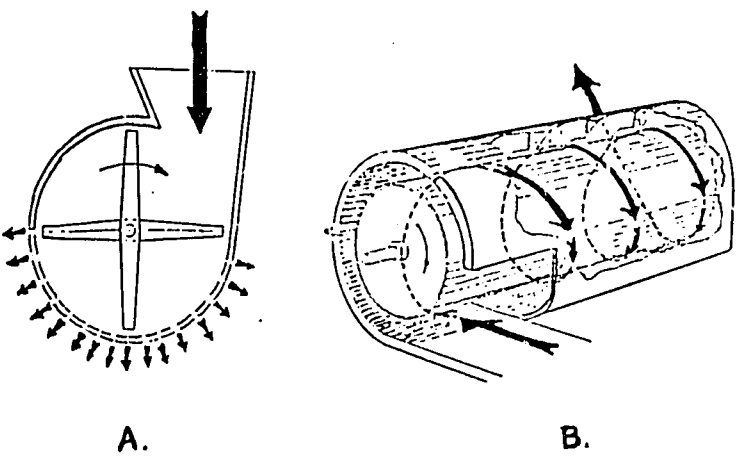

Fig 11. Movement of Crop through a) Beater type wheat thresher and b) Axial flow type paddy threshers.

Fig 12. The Beater type wheat threshing drum popular in Egypt.

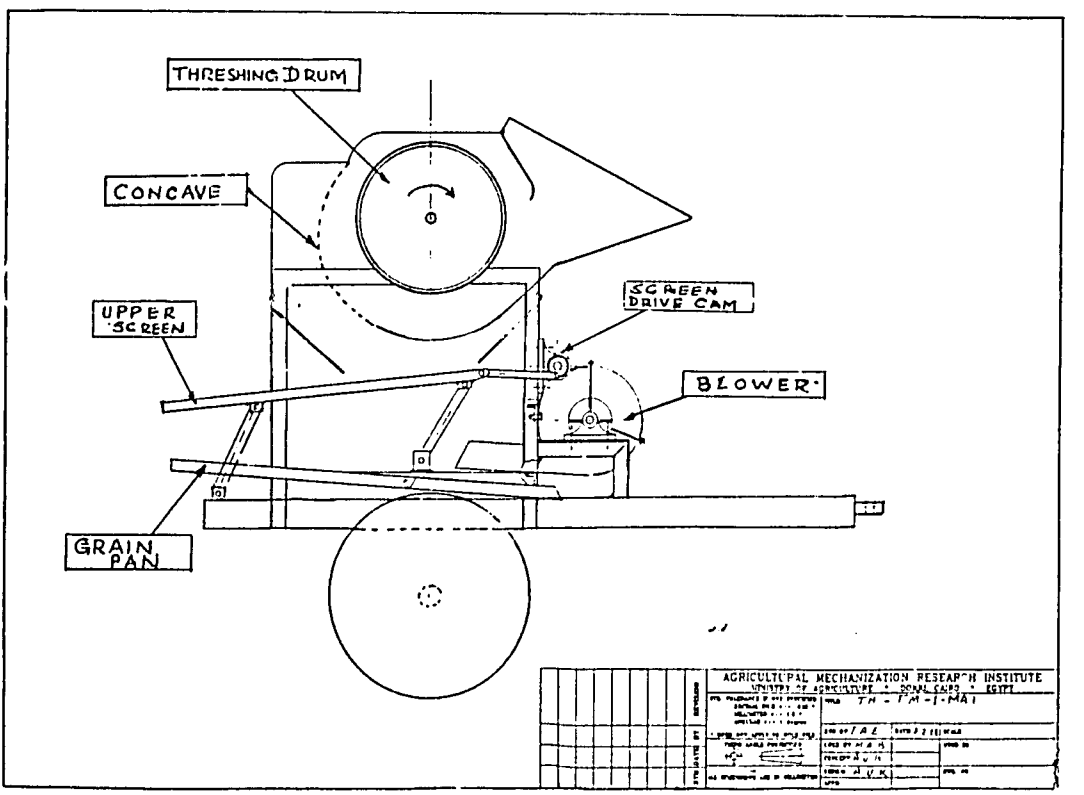

Fig 13. Schematic drawing of the beater type wheat threshing drum with newly developed air screen cleaner.

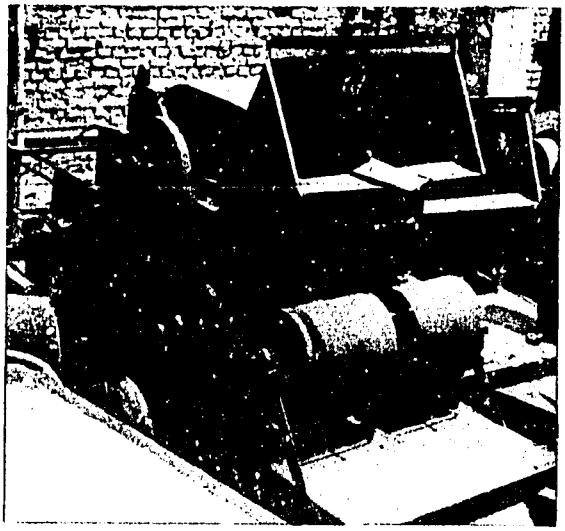

Fig 14. The Tanta Motors company wheat threshing drum equipped with the newly developed air-screen cleaning system.

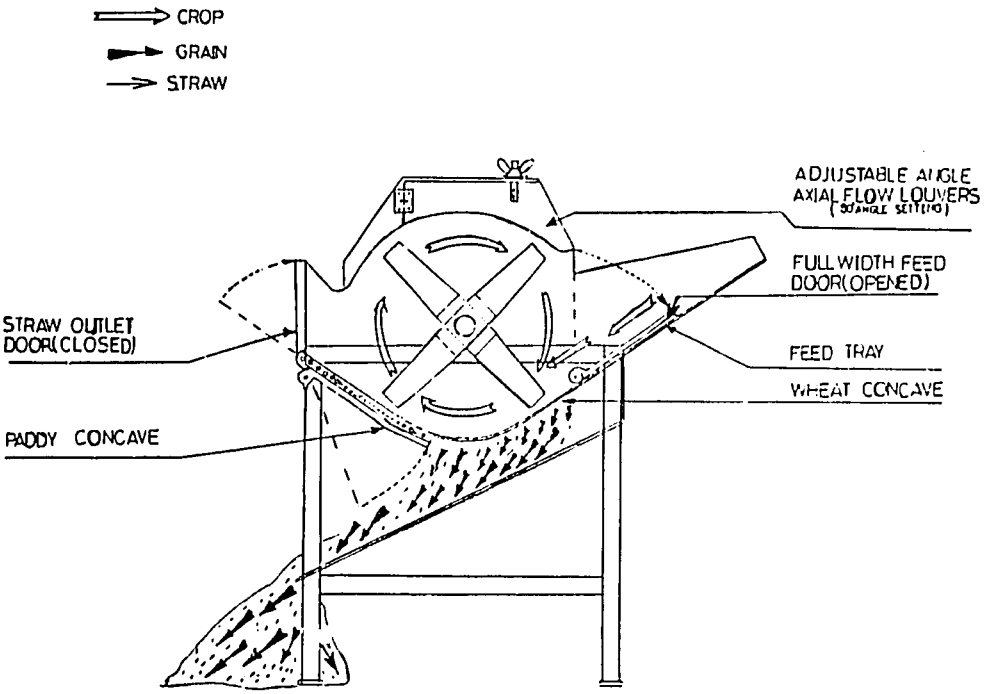

WHEAT THRESHING MODE(BEATER)

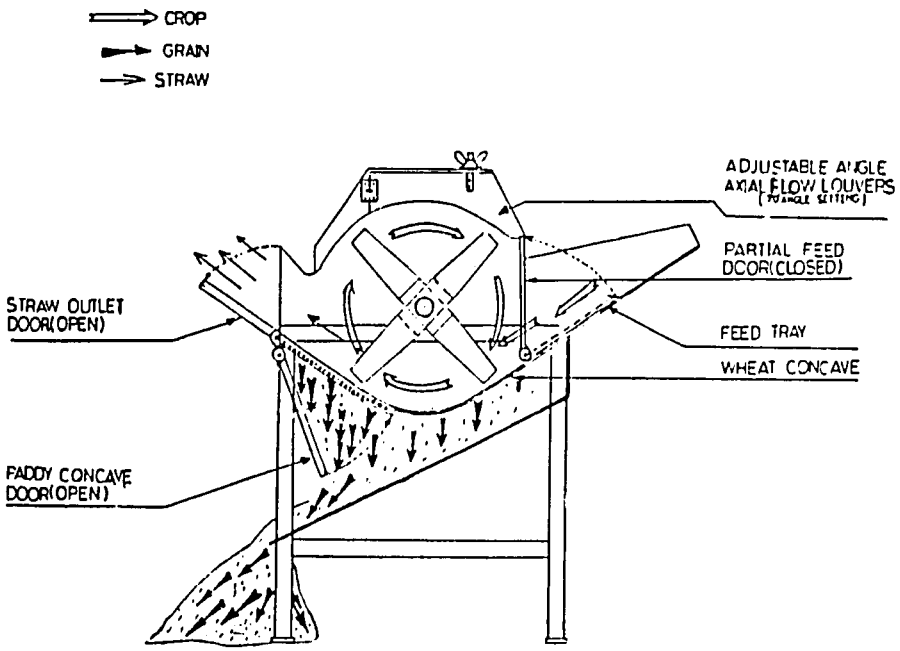

PADDY THRESHING MODE(AXIAL FLOW)

Fig 15. Schematic drawing of a convertible beater type wheat threshing drum modified for axial flow paddy threshing operating.

Fig 16. The Beater type wheat thresher being tested for threshing wheat in the Field.

Fig 17. The beater type thresher being tested for threshing paddy; note paddy straw coming out of straw outlet.

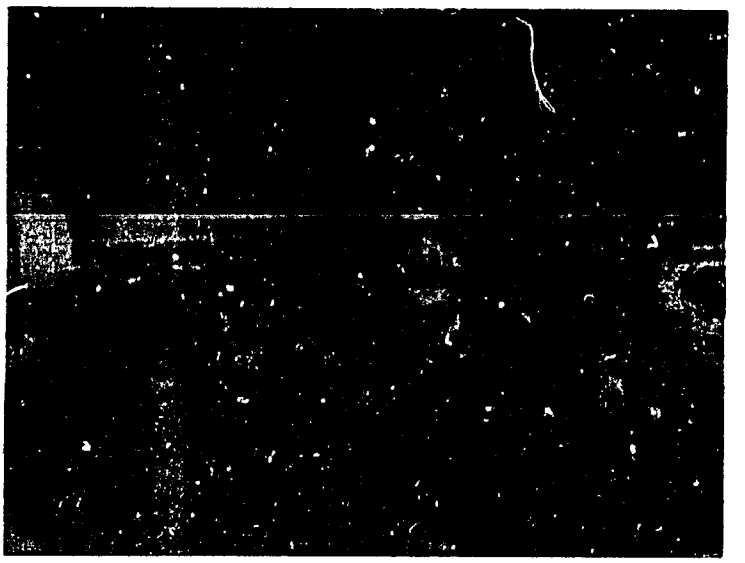

Fig 18. The IRRI-PAK multicrop thresher being used for threshing in Pakistan.

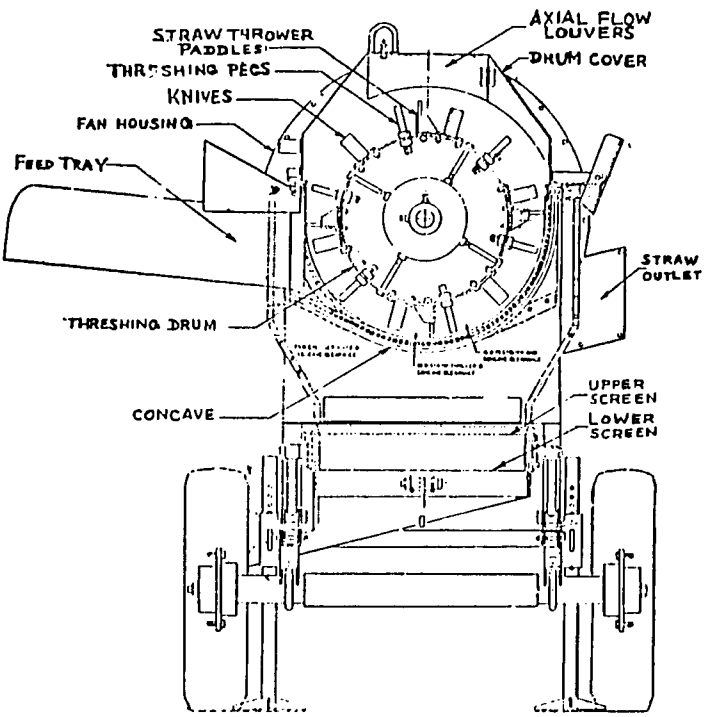

Fig 19. End view drawing of the IRRI-PAK threshing showing major components.

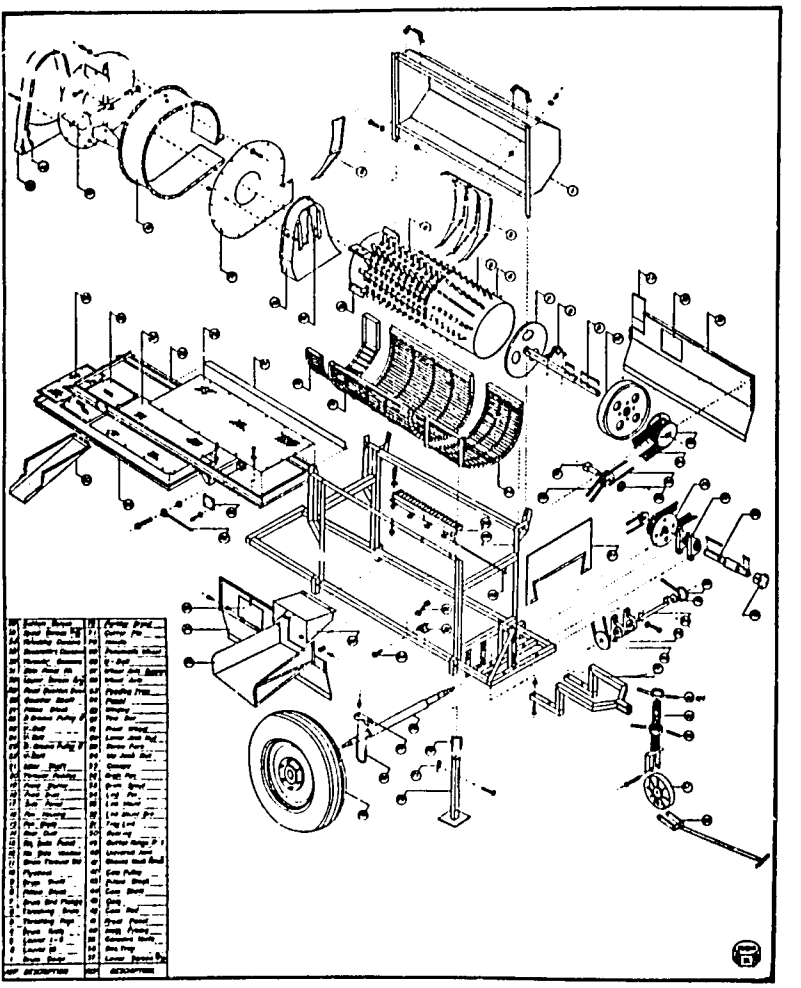

Fig 20. Exploded view of the IRRI-PAK thresher.

Fig 21. The IRRI-PAK thresher being used for threshing paddy in Egypt.

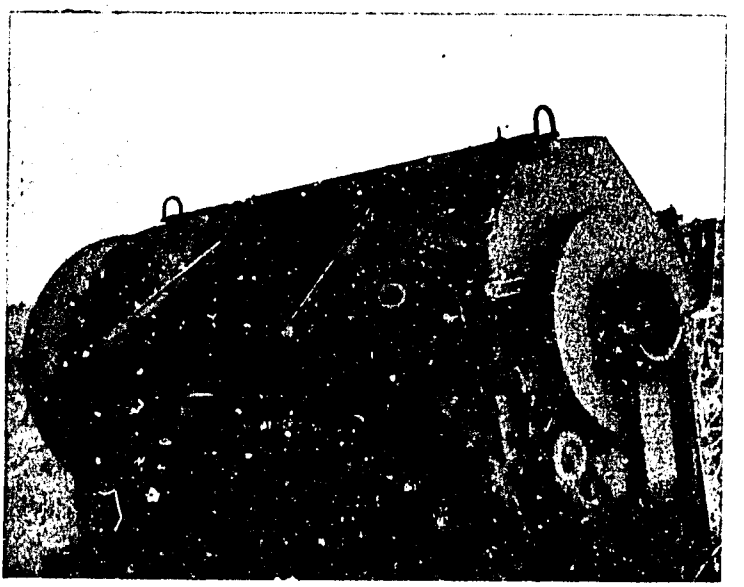

Fig 22. The IRRI-PAK thresher feeding tray modified for sun-flower threshing.

Fig 23. Modified concave bar spacing (20mm) of the IRRI-PAK threshers for high capacity paddy threshing.

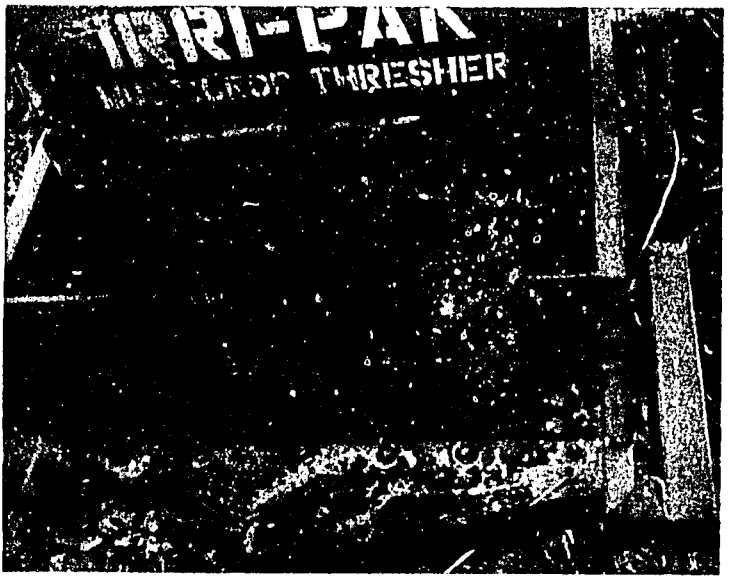

Fig 24. Modified screen on grain spout with 20mm diagonal holes on the IRRI-PAK thresher.

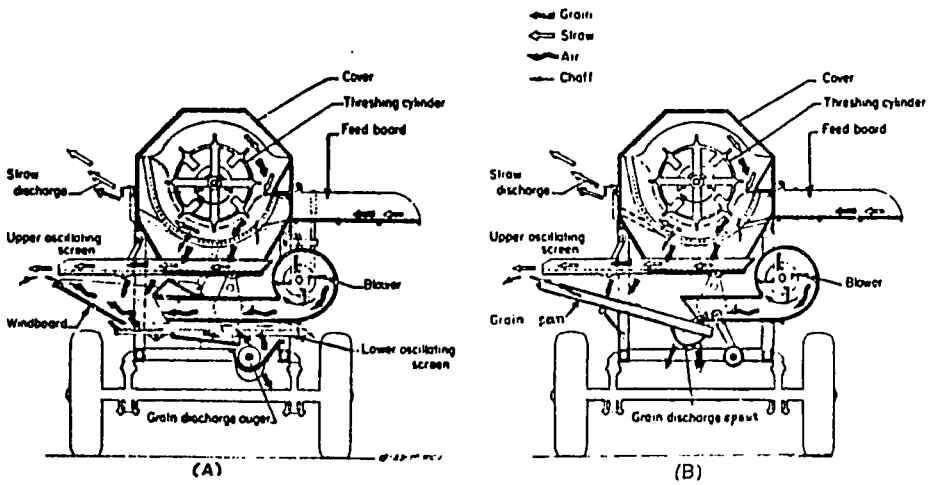

Fig 25. The IRRI TH-8 paddy thresher (A) original IRRI machine with two screen and an auger (e) modified AMRI machine with single screen and no auger.

Fig 26. The IRRI TH-8 paddy thresher being tested at Sakha on paddy.

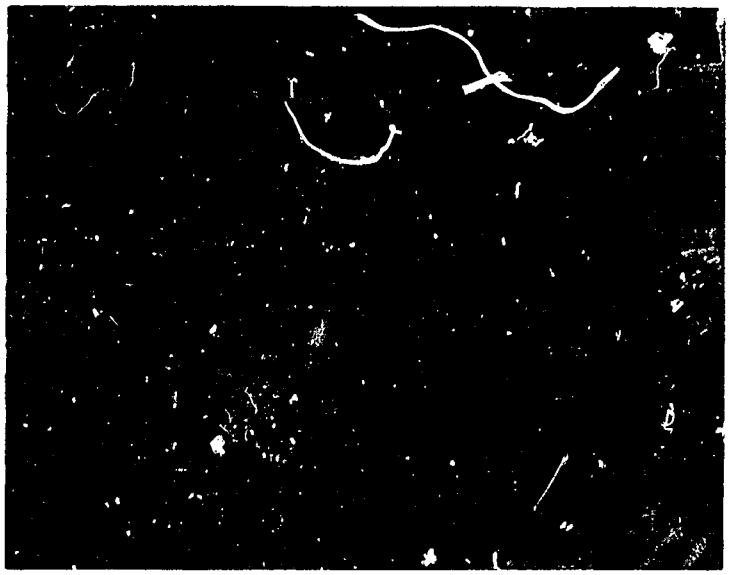

Fig 27. Grain spilling over the side of the grain spout of the modified IRRI-TH-8 paddy thresher.

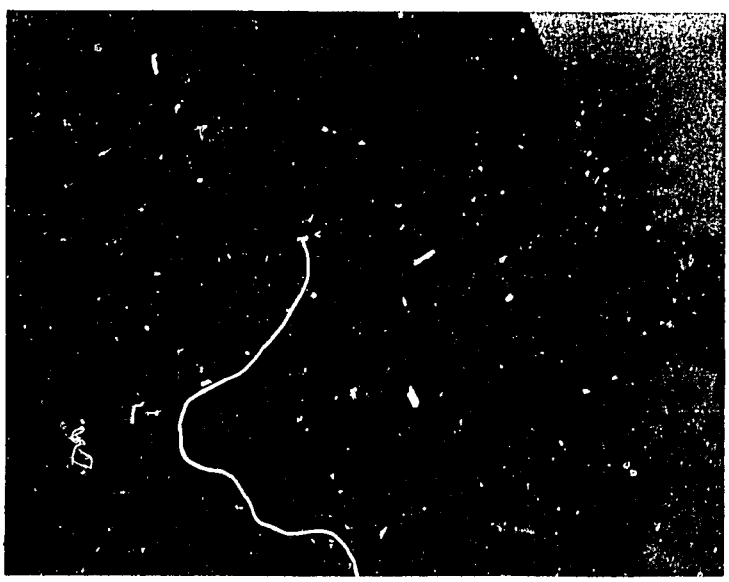

Fig 28. Straw wrappage on threshing drum shaft of the IRRI TH-8 thresher.

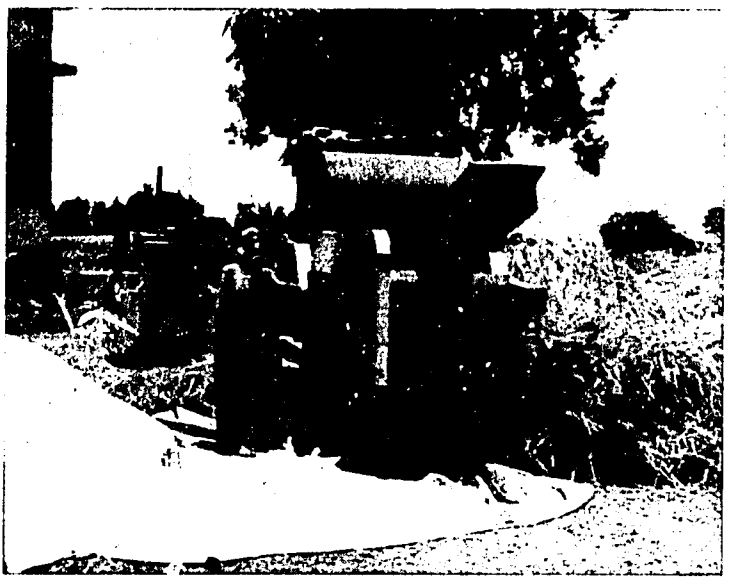

Fig 29. The Turkish beater type wheat thresher manufactured in Egypt by the Helwan Machine Tool Co. Helwan.

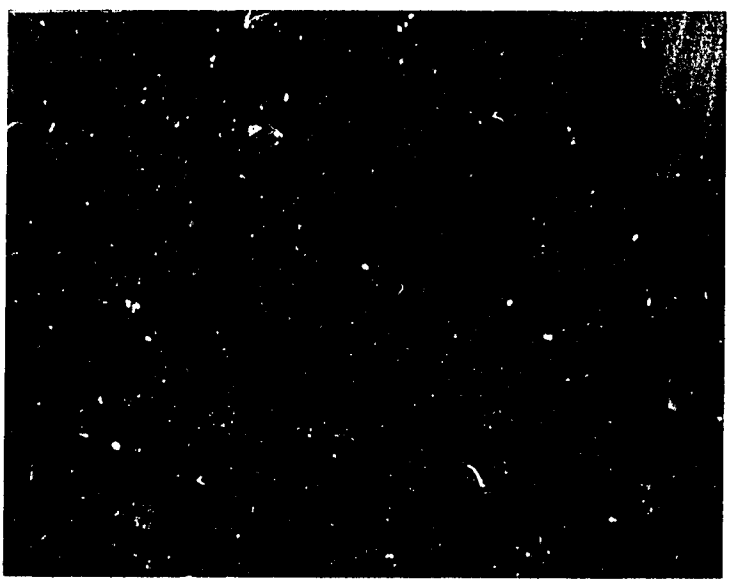

Fig 30. Blocked grain conveying system of the Helwan Machine Tool Co thresher due to inadequate air flow.

TABLES IN NUMERICAL ORDER

Table 1. Comparative field tests of three reapers on paddy

Crop variety: Giza 1181
Average plant height: 80.6 cm

No. of plants/m sq. : 350
Grain yield, kg/fed: 4250

Item	Unit	IRRI/ITT Kher 1 Self propelled 1 m	IRRI Self propelled 1.2 m	I.T.T Tractor mounted 2.2 m
Cutting height	cm	7	9.5	8.8
Field travel speed	km/hr	1.6	2.4	1.7
Cutting swath width	cm	100	120	220
Theoretical field capacity	fed/hr	0.9	1.1	1.1
Actual field capacity	fed/hr	0.38	0.68	0.8
Field efficiency	%	42.0	61	71.4
Reaping rate	hrs/fed	2.6	1.47	1.25

Table 2. Paddy harvesting losses with the three reapers

Crop variety: Giza 1181
Average plant height: 80.6 cm

No. of plants/m sq. : 350
Grain yield, kg/fed: 4250

Loss		IRRI/ITT Kher 1 m	IRRI 1.2 m	ITT 2.2 m
Preharvest (1)	gm/m sq.	0.5	0.5	0.5
Machine & shattering (2)	gm/m sq.	0.4	0.5	0.5
Windrowing (3)	gm/m sq.	3.7	3.77	7.02
Total	gm/m sq.	4.6	4.77	8.02
Percent loss	%	0.45	0.47	0.79

(1) "Preharvest Loss" refers to grains and panicles that fell on the ground due to natural forces like wind. These were collected at two randomly selected 1 m sq. areas from each test field.

(2) "Machine Shattering Loss" refers to ears and grain dropped on the ground due to the machine's cutting operation.

(3) "Windrowing Loss" is grain lost during the dropping of the crop in a windrow. A 1-m wide plastic sheet was spread along sides of the machine travel path to collect the crop falling in the windrow. Windrowing losses were measured by carefully removing the crop from the windrow and collecting loose grain and panicles left on the plastic sheet.

Table 3. Design specification of multicrop threshers for Egyptian conditions

ESSENTIAL FEATURES

1 MUST INCORPORATE BALADI THRESHER-TYPE DRUM CONCAVE ASSEMBLY

2 MUST BE CONVERTIBLE FROM BEATER TO AXIAL FLOW TYPE OPERATIONS

3 MUST THRESH MAJOR EGYPTIAN GRAIN CROPS: WHEAT, PADDY, BEANS, SOYBEAN, SUNFLOWER, ETC.

4 MUST HAVE WHEAT THRESHING WITH TIBN-MAKING CAPABILITY

5 THRESHING OUTPUT: WHEAT 0.75 TON/HR, PADDY 1.25 TON/HR

6 POWERED WITH 60 HP TRACTOR PTO BELT OR SHAFT DRIVE

7 THRESHING CREW NOT TO EXCEED FOUR PERSONS

8 MAXIMUM PERMISIBLE THRESHING GRAIN LOSS: 2%

9 GRAIN CLEANING EFFICIENCY : 98% OR BETTER

10 MACHINE PRICE TO FARMERS: £E. 4000 TO 4500

11 MUST BE EQUIPPED WITH PNEUMATIC GRAIN BAGGER

12 MAXIMUM SET-UP TIME: 20 MINUTES

DESIRABLE FEATURES

1 EASY TO MANUFACTURE BY SMALL WORKSHOPS

2 CAPABLE OF SHELLING CORN

3 EASY TO REPAIR AND MAINTAIN

4 WORKING LIFE: 8 -10 YEARS

5 FEEDING BY OPERATOR STANDING ON GROUND

6 WEIGHT NOT TO EXCEED 800 KG

7 EXTRA LONG FEED TRAY FOR SAFETY

8 QUICK OPENING DRUM COVER FOR CLEANING

9 PNEUMATIC WHEELS FOR RAPID ROAD TRANSPORT

10 STABILIZING LEGS FOR RIGID OPERATION

UNDESIRABLE FEATURES

1 LOOSE COMPONENTS WHICH COULD GET LOST

2 UNPROTECTED BELTS

3 POOR BALANCE FOR TOWING

4 SHARP EDGES AND CORNERS

5 TO WIDE A VARIETY OF BOLTS AND FASTENERS

6 USE OF CHAINS FOR DRIVING COMPONENTS

Table 4. Performance of Tanta Motors Baladi beater-type wheat thresher modified for threshing paddy

Date: Oct. 18, 1988
Crop: Paddy, local variety
Cut paddy length: 130 cm

1TM/1H

Straw/grain ratio: 2.5:1
Grain moisture level: 8%

Exp. No.	Drum R.P.M	Screen R.P.M	Test Duration (Sec.)	Grain Output (Kg)	Threshing Output (Kg/hr)	Total Damaged Grain	Straw with Grain at Outlet (%)	Clean Grain Output (%)	Grain Cleaning Efficiency (%)	Whole Grain Loss from straw outlets (%)	Grain Loss from Fan Outlet (%)	Unthreshed Grain
1	590	370	150	45	1080	0	0.2	99.8	99	0.02	0.30	0
2	600	370	120	38	1140	0	0.1	99.9	99.9	0.12	0.25	0
3	595	365	120	41	1230	0	0.15	99.85	99.85	0.15	0.20	0
4	590	370	120	36	1140	0	0.10	99.9	99.9	0.17	0.22	0

Table 5. Threshing performance of the IRRI-PAK thresher (blue machine) on paddy

Straw/grain ratio: 2.5:1
Grain moisture: 27%

Exp. No.	Drum R.P.M.	Screen R.P.M.	Test Duration (Sec)	Grain Output (Kg)	Threshing Output (Kg/hr)	Total Damaged Grain (%)	Straw with Grain at Outlet (%)	Clean Grain Output (%)	Grain Cleaning Effici-ency (%)	Whole Grain Loss from Straw Outlets	Grain Loss from Fan Outlet (%)	Untrheshed Grain
1	450	145	143	340	330	1.33	1.7	96.97	98.93	0	1.26	0
2	500	135	160	380	360	1.60	0.66	97.74	99.34	0	1	0
3	550	115	172	390	375	1.5	1.0	97.5	99.0	0	2.5	0
4	600	110	172	410	400	2.0	0.75	97.19	99.25	0	4.85	0

Table 6. Threshing performance of the IRRI-PAK thresher (blue machine) on paddy

Date: Oct. 27, 1988
Crop: Paddy, Giza
Cut paddy length: 130 cm

Straw/grain ratio: 2.25:1
Panicle length: 19 cm
Grain moisture: 25%

Exp. No.	Drum R.P.M.	Screen R.P.M.	Test Duration (Sec)	Grain Output (Kg)	Threshing Output (Kg/hr)	Total Damaged Grain (%)	Straw with Grain at Outlet (%)	Grain Cleaning Efficiency (%)	Whole Grain Loss from Straw Outlet (%)	Grain Loss from Fan Outlet %	Unthreshed Grain
1	500	370	85	11.00	466	1.00	3	97	0.15	0	0
2	475	350	60	10.8	648	0.99	3	97	0.51	0	0
3	450	340	60	10.25	615	1.00	3	97	0.00	0	0

Table 7. Threshing performance of the IRRI-PAK thresher (blue AMRI machine) on paddy

Date: Nov. 10, 1988
Crop: Paddy, Hyv — Grain Moisture 11%
Cut paddy length: 69 cm — Straw/grain: 4.1: 1

Exp No.	Drum R.P.M	Screen R.P.M	Test Duration (Sec)	Grain Output (Kg)	Threshing Output (Kg/hr)	Total Damaged Grain (%)	Straw with Grain at Outlet (%)	Clean Grain Output (%)	Grain Cleaning Efficiency (%)	Grain Loss From Straw Outlet (%)	Grain Loss from Fan Outlet (%)	Unthreshed Grain (%)
1	450	340	120	42	1260	0.14	2.38	97.48	97.60	0.71	0.26	0 0
2	500	360	120	46	1380	0.19	2.57	97.24	97.40	0.41	0.37	0 0
3	475	350	120	55	1650	0.16	2.90	96.94	97.10	0.03	0.25	0 0

Table 8. Threshing performance of the IRRI-PAK thresher (green IRRI machine) on soybeans

Date: Sept. 20, 1988
Crop: Soybeans

Exp. No.	Drum R.P. M.	Screen R.P.M.	Test Duration (Sec.)	Grain Output (Kg)	Threshing Output (Kg/hr)	Total Damaged Grain (%)	Straw with Grain at Outlet (%)	Clean Grain Output (%)	Grain Cleaning Efficiency (%)	Whole Grain Loss from Straw Outlet (%)	Grain Loss from Fan Outlet	Unthre-shed Grain
1	460	330	45	8.50	680	3.17	0.36	96.47	99.64	1.26	0	0
2	400	305	47	10.75	825	1.38	5.17	93.45	94.83	1.47	0	0
3	500	360	37	9.00	876	9.90	0	90.10	100.00	1.05	0	0

Table 9. Threshing performance of the modified IRRI-TH8 thresher on paddy

Straw/grain ratio: 1.4:1 Test duration: 5 min. each
Cut paddy length: 110 cm Crop/moisture content: From 19 to 21% dry basis

Test No	Drum Speed R.P.M	Fan Speed R.P.M.	Output		Separation loss		Blower/Screen Loss		Total Loss		Cleaning Efficiency %
			kg/5 min.	Ton/h	Kg	%	Kg	%	Kg	%	
1	500	690	56	0.672	0.0390	0.07	1.120	2.00	1.159	2.02	98.78
2	550	720	62	0.744	0 0496	0.08	1.260	2.10	1.309	2.10	98.87
3	600	890	73	0.876	0.0584	0.08	1.779	2.30	1.837	2.35	98.88
4	620	930	80	0.960	0.0960	0.12	1.880	2.35	1.976	2.41	98.9
5	700	1100	82	0.984	0.0660	0.08	1.965	2.48	2.031	2.54	98.89

Table 10. Test results of the Helwan Machine Tool Co. thresher on wheat

Crop Condition:

Straw/grain ratio	1.4:1
Panicle length, cm	11.3
Cut paddy length, cm	81
Average straw stem diameter, mm	3.75
Grain moisture content, dry basis, %	12

Test Data:

Test duration, minutes	60
Threshing drum speed with load, rpm	796
Blower speed with load, rpm	2160
Screen oscillations with load, osc/minute	275
Threshed grain output, kg/hour	477
Threshing output at 14% moisture level, kg/hour	488
Threshing efficiency, %	100
Grain damage, %	3
Grain cleaning efficiency, %	94.40

PUBLICATIONS

- *Quarterly Report*
  (November - December, 1986) 1

- *Quarterly Report*
  (January - March, 1987) 2

- *Implementation Workshop - Proceedings*
  February 9-17, 1987 3

- *Quarterly Report*
  (April - June, 1987) 4

- *Life of Project Plan*
  (September, 1987) 5

- *Implementation and Financial Plan, Fiscal Year 1987-1988*
  (September, 1987) 6

- *Manual for Grant Research Under NARP*
  (October, 1987) 7

- *Manpower Development & Training Plan*
  (November, 1987) 8

- *Quarterly Report*
  (July - September, 1987) 9

- *Annual Report - 1987*
  (May, 1988) 10

- *Implementation & Financial Plan FY 1988-1989*
  (August, 1988) 11

- *List of Approved Proposals Under the Research Support System*
  (December, 1988) 12

- *Work Plan for the NARP Research Grants Program Part A: For Non-ARC Agricultural Research Institution in Egypt*
  (December, 1988) 13

- *Procedures for Grant Research Under NARP At Non-ARC Agricultural Research Institutions in Egypt*
  (December, 1988) 14

- *Quarterly Report*
  (July - September, 1988) 15

- *Quarterly Report*
(October - December, 1988) 16

- *Reporting Results Workshop Proceedings and Preparation Guides for Research Proposals and Progress and Technical Reports*
(May, 1989) 17

- *Quarterly Report*
(January - March, 1989) 18

- *NARP Annual Report FY 1988-89 and Implementation and Financial Plan for the Research Component FY 1989-90*
(August, 1989) 19

- *Technology Transfer Component, Implementation and Financial Plan*
(August, 1989) 20

- *Technology Transfer Component, Life of Project Plan*
(August, 1989) 21

- *Quarterly Report*
(July - September, 1989) 22

- *Report of the Technology Transfer Workshop*
(December, 1989) 23

- *Steering Committee Seminar Report*
(January, 1990) 24

- *Quarterly Report* 25
(October - December, 1989)

- *Planning Workshop* 26
(March, 1990)

- In-Country Training
(April, 1990) 27

DISTRIBUTION

NO.		
6	Dr. Ahmed Momtaz	Director General, NARP; Director, ARC; Director, Research Component
1	Dr. Yehia Hassan	Chairman, Foreign Agricultural Projects Committee
1	Acc. Abdel Bari Hassan	Steering Committee Member; Head, Financial and Administrative Affairs Sector, MOA
1	Dr. Abdel Salam Gomaa	Steering Committee Member; Deputy Director, ARC; Director, Seed Component; Supervisor, Cotton Research Institute
1	Dr. Abdullah Nassib	Steering Committee Member; Deputy Director for Extension and Training, ARC; Director, Technology Transfer Component
1	Eng. Ali Nashaat	Steering Committee Member; Secretary General, ARC
1	Dr. Bakir Oteifa	Steering Committee Member
1	Eng. Farouk Afifi	Steering Committee Member
1	Dr. Fawzi El Sharawi	Steering Committee Member; Deputy President, Ain Shams University
1	Dr. M.H.A. Sharafeldin	Steering Committee Member; Director, New Initiatives Component; Supervisor, Animal Production Research Institute
1	Dr. Osman El-Kholei	Steering Committee Member; Director, Agricultural Policy Analysis Component; Supervisor, Agricultural Economics ResearchInstitute
1	Eng. Abdel-Razik Badawy	Head, General Organization fo Land Reclamation
1	Dr. Abdurabbo Ismail	Deputy Director, FCRI
1	Dr. Adel Abo El-Naga	Deputy Director APRI; Member, TTR, ARC
1	Dr. Adel El-Beltagi	Head, Central Administration for Minister's Office for Land Reclamation, MOA
1	Eng. Adel Ezzi	Chairman, Principal Bank for Agricultural Development and Credit
1	Dr. Ahmed Abdel Halim	Director, Central Laboratory for Statistics
1	Dr. Ahmed Abdel-Rahim	NARP News
1	Dr. Ahmed El-Sahrigi	Director, Agricultural Mechanization Research Institute
1	Dr. Ahmed Nour	Director, Sugar Crops Research Institute

1	Dr. Akila Salleh	Director, Central Laboratory for Food and Feed
1	Dr. Alaa Eldin Z. Bondok	Head, Central Administration for Minister's Office for Agriculture, MOA
1	Eng. Aly Rashad	Offshore Procurement Director
1	Eng. Aly Salem	Chairman, Construction Working Group
1	Dr. Fawzy Mahrous	Director, Rice Research and Training Center
1	Eng. Fouad Abo-Hedb	Chairman, West Nubaria Company
1	Dr. Galal Moawad	Director, Plant Protection Research Institute
1	Dr. Hosny El-Sawah	Director, Animal Health Research Institute
33	Dr. Ismail Darrag	Head, Central Administration for Agricultural Research Stations
1	Dr. Kamla Mansour	Director, Horticulture Research Institute
1	Dr. M. Sabry Tawfik	Director, Animal Reproduction Research Institute
1	Dr. M. Shafie Sallam	Director, Agricultural Extension and Rural Development Research Institute
1	Dr. Mahmoud Barkouky	Head, ADS Project
1	Eng. Mohamed Dessouki	Head, Agriculture Development Sector, MOA
1	Eng. Mohamed El-Akad	Head, Agricultural Museum; Member, TTR ARC
1	Dr. Mohamed Khalifa	Head, Central Administration for Pest Control, MOA
1	Dr. Mohsein Al-Didi	NARP News
1	Dr. Mohsein El-Gindy	Senior Researcher, Pesticides Central Lab; Member, TTR, ARC
1	Dr. Moukhtar Sattour	Director, Plant Pathology Research Institute
1	Dr. N. El-Mowelhi	Director, Soils & Water Research Institute
1	Eng. Ragaa Abdel Hady	Director, Egyptian National Agricultural Library (ENAL)
1	Dr. Rashad Abo-El-Enein	Director, Field Crops Research Institute; Member, TTR, ARC
1	Dr. Sayed A. Salama	Director, Veterinary Serum & Vaccine Research Institute
1	Dr. Yeldez M. Ishaq	NARP News
√ 1	Dr. Amir Khan	Agricultural Mechanization Advisor
1	Dr. Bill Gregg	Seed Technology Advisor
1	Ms. Coleen Brown	Deputy Chief of Party/Training and Manpower Development Advisor
1	Mr. Cory Wengreen	Administrative Services Advisor

1	Mr. Don Esslinger	Technology Transfer Advisor, Central Level
1	Dr. Edward Spratt	Project Manager, International Rice Research Institute
1	Dr. Gordon Beckstrand	Team Leader, CID, On-Farm Research and Demonstration Advisor
1	Dr. Jack Law	Project Manager, SDSUF
1	Mr. Odis G. Kendrick	Sr. Research Management Advisor
1	Mr. Paul Day	Technology Transfer Advisor, Governorate Level
1	Prof. Richard Foote	Research Grants/Publications Coordinator
1	Dr. Willis McCuistion	Interdisciplinary Research Advisor
6	Mr. Ken Lyvers	Director, Office of Agriculture, USAID
2	Dr. Earl Kellogg	Executive Director, CID
2	Dr. H. Matteson	Project Director, NMSU/CID/NARP
20	ARC Libraries	Office of Director General
6	Ministry of Agriculture	