PN-ABN-183 C8-205

# FINAL REPORT

Submitted to the Office of the Science Advisor
U.S. Agency for International Development

# FARMER DRIVEN ELECTROSTATIC LOW VOLUME SPRAYER


Principal Investigator:

PROF. CHANDRA P. GUPTA

Co-Investigator:

PROF. GAJENDRA SINGH

Asian Institute of Technology
Bangkok, Thailand

Collaborator:

DR. GEDALYAHU MANOR
Technion Institute of Technology
Haifa, Israel



Project Number: C8-205

Grant Number: 936-5544-G-00-8057-00


A.I.D. Grant Project Officer:

MR. PETER H. DEINKEN

CC: CDIE + BOST ID

Project Duration:

September 1, 1988 - December 31, 1992

# FINAL REPORT

Submitted to the Office of the Science Advisor
U.S. Agency for International Development

# FARMER DRIVEN ELECTROSTATIC LOW VOLUME SPRAYER


Principal Investigator:

PROF. CHANDRA P. GUPTA

Co-Investigator:

PROF. GAJENDRA SINGH

Asian Institute of Technology
Bangkok, Thailand

Collaborator:

DR. GEDALYAHU MANOR
Technion Institute of Technology
Haifa, Israel



Project Number: C8-205

Grant Number: 936-5544-G-00-8057-00

A.I.D. Grant Project Officer:

MR. PETER H. DEINKEN

Project Duration:

September 1, 1988 - December 31, 1992

## TABLE OF CONTENTS


| Section | Description | Page |
|---|---|---|
| 1. | EXECUTIVE SUMMARY | 1 |
| 2. | RESEARCH OBJECTIVES | 2 |
| | 2.1 Rationale | 2 |
| | 2.2 Innovative Aspect | 3 |
| | 2.3 Objectives of the Project | 3 |
| 3. | METHODS AND RESULTS | 3 |
| | 3.1 The Spinning-disc Unit | 4 |
| | 3.2 Electrostatic Charging Systems | 4 |
| | 3.2.1 Methods of Charging the Spray | 4 |
| | 3.2.2 Selection of Best Charging System | 6 |
| | 3.3 High Voltage Power Supply | 6 |
| | 3.4 Electrostatic Low Volume Sprayer | 7 |
| | 3.5 Droplet Charge | 8 |
| | 3.6 Droplet Size | 10 |
| | 3.7 Field Sprayer Simulator Laboratory | 11 |
| | 3.8 Laboratory Experiments | 11 |
| | 3.9 Field Experiments-AIT, Bangkok | 13 |
| | 3.9.1 Swath | 13 |
| | 3.9.2 Field Capacity | 13 |
| | 3.9.3 Deposition Characteristics | 14 |
| | 3.9.4 Drift Characteristics | 15 |
| | 3.10 Field Experiments-IIT, Haifa, Israel | 17 |
| | 3.11 Cost Analysis | 17 |
| 4. | IMPACT, RELEVANCE AND TECHNOLOGY TRANSFER | 19 |
| 5. | PROJECT ACTIVITIES/OUTPUTS | 20 |
| | 5.1 Meetings Attended | 20 |
| | 5.2 Published Papers | 20 |
| | 5.3 Papers Presented in Meetings | 21 |
| | 5.4 Patents | 21 |
| | 5.5 Brochure | 21 |
| 6. | PROJECT PRODUCTIVITY | 22 |
| 7. | FUTURE WORK | 22 |
| 8. | LITERATURE CITED | 22 |

# 1. EXECUTIVE SUMMARY

The project aimed to develop a low-cost, lightweight, hand-held electrostatic low volume sprayer (ELVS) suitable for small-farm holders in developing countries. The sprayer combines the principles of Controlled Droplet Application (CDA) and electrostatic charging to improve spraying efficiency. CDA emphasizes applying the correct and uniform size of droplets to use minimum volume and dose to achieve effective control. Electrostatically charged spray drops get attracted to the plant target and hence deposition is increased.

The sprayer consists of a spinning-disc with an induction-type electrostatic charging system, mounted into a PVC pipe handle. The induction charging method was used because it has a low power requirement, i.e., only 0.7 watt. The position, size and material of the charging electrode were optimized to give the best droplet charging performance. A 3.1 mC/kg spray charge was attained at 5000 rpm disc speed and 25 mL/min liquid flow rate. Eight size D batteries fitted inside the sprayer's carrying handle provide power for the 3 watt DC motor that spins the disc and a 3 kV power supply which charges the spray droplets. When the sprayer is used continuously, the batteries should last at least 6 hours. Disc speed can be controlled by the operator to produce the correct droplet size for a particular target. Droplet size (vmd) ranges from 109 to 183 $\mu$m depending on the disc speed and flow rate. Droplet size is reduced by 1 to 10% due to electrostatic charging.

The ELVS's field spraying capacity is higher than that of the conventional knapsack-type hydraulic nozzle sprayer (HNS), i.e., 0.12 - 0.16 ha/hr vs. 0.08 ha/hr. The reasons are: less water hauling time (20 li/ha is required for the ELVS while about 200 li/ha for the HNS), less frequent refilling of liquid tank, and less resting time. The ELVS also gives chemical deposits of 3.9 times higher for rice and 1.5 times higher for soybean plants than those given by the HNS. This could mean a reduction of at least 50% of the recommended chemical application rate. Electrostatic charging also reduced spray drift by 16%. Hence, hazards due to the operator's exposure to toxic chemicals are reduced. Although the initial cost of the ELVS is twice higher than the HNS, the overall spraying cost is lower because of its lower requirements for labor and chemicals.

# 2. RESEARCH OBJECTIVES

## 2.1 Rationale

Chemical application plays an important role in reducing crop losses due to insect pests, diseases, and weeds which are estimated to reach at least one third of the potential crops in the Third World countries (Jeyaratnam, 1985). Chemical pesticides are highly effective, and relatively simple and quick to apply. However, spraying pesticides involves too much wastage. According to Himel (1982), it is "the most inefficient industrial process in worldwide use". The increasing cost of chemicals coupled with the need to minimize chemical contamination of the environment leads to an urgent need to improve the efficiency of spray application.

Proper selection and use of equipment for pesticide application has a direct effect on application efficiency. Small farmers in developing countries use knapsack-type hydraulic sprayer for spraying pesticide. Because of the irregular breakup of liquid, this sprayer produces spray drops having a very wide range of sizes from less than 50 $\mu$m (commonly called as mist) to greater than 1 mm (as large as rain drops). The numerous fine droplets (less than 100 $\mu$m) are very susceptible to drift while the bigger drops (greater than 300 $\mu$m) are likely to bounce or roll-off the plants. With this system, a large volume of spray mixture is needed to achieve the effective coverage on the crop. Carrying a large volume of water in the field makes spraying a very strenuous task. In some countries, spraying may be limited to the rainy seasons only when clean water is available. Major improvement of the existing sprayer, or development of completely different spraying equipment is necessary to minimize chemical wastage, increase application efficiency, and reduce drudgery in spraying.

An important key to an efficient spray application is the production of sprays with a narrow range of droplet sizes and of appropriate sizes for the targets (Matthews, 1977). This concept known as Controlled Droplet Application (CDA) could reduce wastage by reducing the drift-generating size and by eliminating formation of bigger drops that simply drip or roll-off the plants. CDA can be achieved with the use of a spinning disc sprayer. This sprayer produces five times as many droplets per liter as the fan jet hydraulic nozzle (Cauquil, 1987). The ratio of volume median diameter (vmd) and number median diameter (nmd) is the determinant of spray droplet uniformity. With increase in the uniformity of droplets, this ratio approaches to unity. The spinning disc sprayer gave a vmd-nmd ratio between 1.2 to 1.6 (Dante and Gupta, 1991) while that of a typical flat fan hydraulic nozzle gave between 2.5 to 6.0 (Bode et al., 1983).

Specific droplet size can be achieved easily by varying the rotational speed of the spinning disc. Thus, when spraying is needed to control insects, evenly sized droplets of approximately 100 microns in diameter can be used or when spraying is needed to control weeds, a much larger droplet size of approximately 250-300 microns can be used. Because bigger drops are significantly reduced, CDA results in the reduction of the liquid needed for spraying. Instead of using about 200 li/ha as for hydraulic nozzle sprayers, spinning disc sprayers require about 20 li/ha (Low Volume or LV application). An application rate of 1 li/ha or less (Ultra Low Volume or ULV application) can be achieved with a spinning disc sprayer using higher disc speeds producing very fine drops.

Electrostatic charging is another technique that could improve spray application efficiency. This involves imparting of an electrical charge to the spray droplets to create an electric field between the spray cloud and the grounded plant target. The generation of an electric field causes attraction of the

spray droplets to the plants. Thus, electrostatic charging gives extra force which aids the spray drops in reaching the target (Miller, 1987). It also alters the trajectories of the spray drops making it possible for drops to deposit on the undersides of the leaves and stems (Matthews, 1988). The theory of electrostatic charging of pesticide spray has long been established and examined thoroughly by authors such as Bowen et al., 1952, Law, 1983, and Bailey, 1986. Law and Lane (1981) reported at least 2- to 7-fold increases in deposition efficiency onto various biological target surfaces using an electrostatic sprayer versus the conventional hydraulic-nozzle sprayer. Law and Bowen (1966) observed about 3.8 times average increase in deposition on the undersides of leaves due to charging.

## 2.2 Innovative Aspects

The hand-held spinning disc sprayer introduced in the 1960's is now becoming a popular spraying device particularly in cotton (Mabbett, 1990). This equipment is lightweight, convenient to carry, requires less water, and could be more effective than hydraulic nozzle sprayers under field conditions. However, in some spraying situations such as insecticide applications where droplets of about 100 microns or less are required, the spinning disc sprayer still presents drift hazards. To minimize drift, electrostatic charging is incorporated to aid the deposit of fine drops onto the intended plants target. Spraying efficiency is improved by using a combination of the spinning disc (CDA principle) and electrostatic charging.

## 2.3 Objectives of the Project

The main objective of the project was to develop and test a hand-held electrostatic low-volume sprayer (ELVS) for small farm use. The specific objectives were:

a) to select a suitable charging system for the proposed electrostatic sprayer,

b) to develop a suitable charging unit based on the charging method selected,

c) to compare the performance of the proposed electrostatic sprayer with other commercially available hand and shoulder carried sprayers in the laboratory and under field conditions, and

d) to analyze the cost of using the proposed sprayer and compare it with the cost of using other commercially available sprayers.

# 3. METHODS AND RESULTS

The development of the electrostatic low volume sprayer had five phases:

a) Modification of a commercially-available spinning-disc sprayer to incorporate three methods of electrostatic charging of spray drops, i.e., induction, corona, and contact charging, and its mounting on a carrying frame to complete the fabrication of the hand-held sprayer.

b) Design and fabrication of a suitable high voltage power supply unit and voltage regulator for the DC motor to allow control of disc speed.

c) Selection of suitable electrostatic charging method and determination of the optimum design and operating parameters of the sprayer.

d) Laboratory evaluation of the sprayer to determine the effect of different operating parameters on charging efficiency, droplet size, spray distribution pattern, deposition efficiency and deposition pattern.

e) Field testing to compare the operation, deposition, and drift characteristics of the electrostatic sprayer with the conventional knapsack-type hydraulic-nozzle sprayer.

## 3.1 The Spinning-disc Unit

A low cost and lightweight ASPEE (American Spring and Pressing Works Pvt. Ltd., Bombay, India) spinning disc unit was used. It consists of a plastic disc, 3 watt DC motor, plastic motor housing, and a 1.1 liter plastic spray container. The disc has a diameter of 88 mm with grooved internal sides and with 180 teeth on the periphery to improve the droplet formation. It is rotated at 4000 to 5000 rpm by an electric motor powered by a 6 volt DC power supply. The liquid is gravity fed from the spray liquid container to the disc via a plastic tube. Liquid flow to the disc is regulated through stainless steel discs with a small hole at the center. These stainless steel discs give liquid flow rates of 25, 50, and 75 mL/min.

## 3.2 Electrostatic Charging Systems

### 3.2.1 Methods of Charging the Spray

Three methods of liquid spray charging have been used successfully in electrostatic pesticide spraying, namely; induction, contact and corona charging methods (Law, 1978; Hussain and Moser, 1986; Matthews, 1989). Charging by induction is accomplished when a liquid sheet passes near a charged electrode. Theoretically, an electric field between the conducting liquid sheet and electrode occurs causing charges to move around them in order to maintain the liquid at the ground potential. The liquid sheet becomes charged to the opposite sign of the electrode. By Gauss' law, the liquid charge is proportional to the electrode voltage.

In corona charging, a very high DC potential is connected to a pointed conductor. Due to this intense potential, dielectric breakdown of the air immediately surrounding the pointed part of the conductor results. This dielectric breakdown causes the emission of a large number of ions both positive and negative. Ions having opposite potential to the electrode become neutralized while those with similar potential are repelled and ionize the zone around the pointed conductor. When spray droplets pass through this ionized zone, they become charged to the sign of the discharged electrode. The amount of charge imparted to the spray-droplet is dependent upon the droplet's dielectric constant, its surface area, and the electrical characteristics of the gaseous discharge (Cobine, 1958).

Contact charging occurs when a high potential is directly connected to the spray liquid. Charge transfer by conduction to the spray liquid can then be effected. This charging system requires relatively large power and good insulation as the whole bulk of liquid is at elevated voltage. The charge imparted to the liquid depends heavily on the electrical capacity of the liquid and voltage strength (Hussain and Moser, 1986).

The following describes how induction, corona and contact charging methods were incorporated into a spinning disc sprayer.

Induction Charging System. Induction charging systems had a common problem of electrode wetting (Marchant and Green, 1982). Because the induction electrode carries charges of opposite sign to those of the spray, the spray drops are attracted towards the electrode. Wetting of the electrode causes a short circuit in the high voltage unit. Marchant (1985) described a simple but very effective method of removing liquid from the induction electrode. This consists of rotating the electrode along with the spinning-disc. Hence, charged drops that are attracted back to the electrode spin off by the rotation of the electrode. Another design consideration was the selection of the best position of the induction electrode relative to the spray liquid. Law (1978) found more effective spray charging when the electrode was close to the spray droplet production zone. In the spinning-disc sprayer, droplets are formed at the periphery of the disc hence the best position of the induction electrode should be just below the periphery of the spinning disc.

Based on these considerations, the spinning-disc with an induction charging system was designed and fabricated (Fig. 1). The shaft of the ASPEE motor was extended by fitting an 8-mm diameter PVC rod fitted inside an aluminum pipe. A ball bearing supported the extended motor shaft. Two modifications were made on the original ASPEE disc. First, a hole was bored at the central part to allow an aluminum hub to be fitted. Second, a PVC disc with most of its central part cut (primarily to reduce its weight) was glued on the bottom of the atomizing disc. This disc holds the induction electrode made of aluminum. The high voltage feed runs from the bearing to the aluminum pipe covering the motor extension shaft, next to the aluminum hub of the spinning-disc, and then finally to the induction electrode via a copper wire.

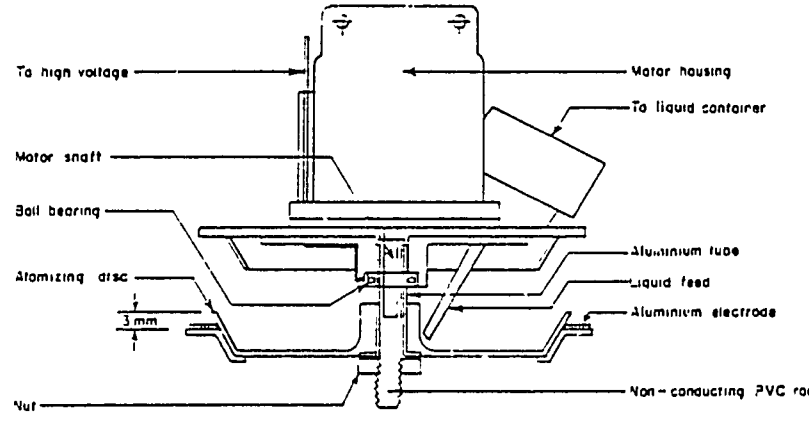


Fig. 1. A spinning-disc with an induction-type charging system

Corona Charging. To produce a corona discharge, 0.5 mm diameter tailor's needles were used as electrodes. Six needles were partially embedded in a PVC disc having the same size and shape as the atomizing disc. One end of these needles was connected to the nut at the center of the PVC disc while the pointed end extended to the periphery of the PVC disc. The PVC disc was mounted below and on the same shaft as the atomizing disc (Fig. 2). High voltage potential connects the ball bearing supporting the extended motor shaft and hence the conducting nut of the PVC disc where the needles are connected. A grounded counter electrode in the form of an aluminum ring was installed about 25 mm above the atomizing disc

Contact Charging. Incorporating contact charging required very few modifications to the original spinning disc unit. An aluminum plate was fixed inside the liquid straining unit so that flowing liquid would come into contact with it (Fig. 3). Connection of the high voltage power supply to the aluminum plate caused a charge transfer to the liquid, hence, charging the liquid.

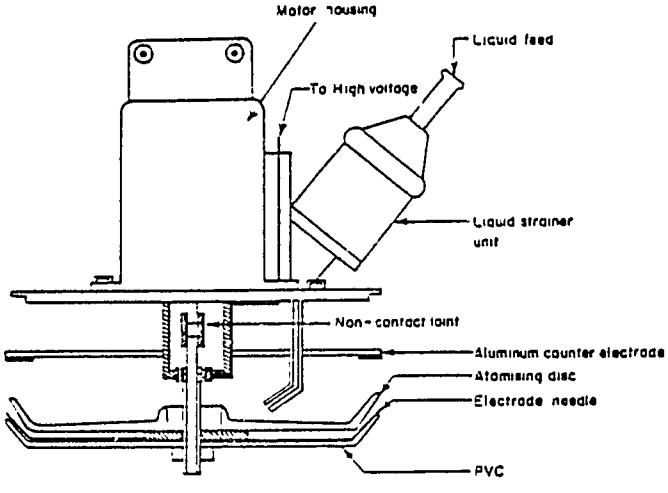


Fig. 2. A spinning-disc with corona charging system.

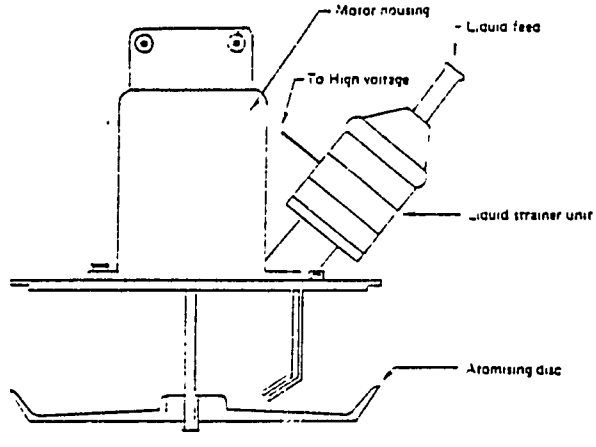


Fig. 3. A spinning-disc with contact charging system.

### 3.2.2 Selection of Best Charging System

There were two criteria for selecting the best charging system; (1) spray charge-to-mass ratio, and (2) the charging system power requirement. The ratio of spray charge to spray mass is a very useful indication of how well a particular charging system is working, which in turn may be used to assess the deposition efficiency of a particular electrostatic sprayer. The power requirement is related to the power consumption and the size of the high voltage power supply. The size of the high voltage unit had be small enough to fit into the handle of the hand-held sprayer.

The three charging methods showed very distinct differences in charging performance. The contact charging system requires relatively high current that exceeds the maximum available from the 30 kV high voltage power supply unit i.e. 300 $\mu$A. Thus, extensive performance test of this method could not be made, hence, this method was immediately eliminated from the test. There was little success in the application of corona charging to the spinning disc sprayer. At a 50 ml/min flow rate, corona charging occurred at 7 kV giving a spray cloud current of about 300-400 nA (about 0.5 mC/kg). Law (1978) obtained a deposition improvement due to electrostatic charging from a pneumatic-type nozzle with a minimum spray charge of 0.8 mC/kg. Further increase in electrode voltage was not possible as the current requirement exceeded the capacity of the high voltage power supply unit.

Induction charging demanded a remarkably low power requirement, only 0.72 watts at 3 kV electrode voltage. It gave about 1.5 mC/kg at 50 ml/min and 3500 rev/min. This represents a 3-fold higher value than that achieved with corona charging at 7 kV electrode voltage. Hence, the induction method was selected for use in the electrostatic spinning-disc sprayer.

## 3.3 High Voltage Power Supply Unit

Two US-made high voltage power supply units, one with a capacity of 30 kV and the other 3 kV, were used in testing the three electrostatic charging systems. The 30 kV power supply was used in the corona and contact charging systems where higher voltage was needed, while the 3 kV power supply was sufficient in the induction charging system. Since these high voltage power supplies are relatively expensive, their use in the hand-held electrostatic sprayer make it unaffordable for the intended users,

i.e., small-farm holders. Development of a low-cost high voltage power supply is essential to bringing down the total cost of the electrostatic sprayer.

The Electronic Division of Thailand Institute of Science and Technological Research (TISTR) has collaborated with the project in developing a low-cost and locally-made 3 kV power supply unit. They were able to design and fabricate one unit with operating characteristics and performance similar to that of the US-made power supply. However, it is too big to fit into the sprayer handle. There were problems in making it smaller. Firstly, some electronic parts had to be imported from abroad which increases the total cost of the unit. Secondly, it was technically difficult to assemble very tiny electronic parts.

The Israel Institute of Technology (IIT), Haifa through the project's collaborator, Dr. G. Manor, has developed a "C" battery size power supply which provides up to 4.0 kV. The cost of these power supply units is US$ 22 each in lots of 1000 pieces or more, and US$ 40 each when smaller quantities are purchased. To test this unit, voltage and current output and input were monitored over a wide range of disc speed and liquid flow rate. Output voltage from the power supply was proportional to the input voltage. A maximum output voltage of about 4.0 kV was obtained at 12 V DC input and a minimum output of about 1.3 kV at 3 V DC input. However, the output voltage became unstable when the input voltage was below 6 V DC. The power consumption of the induction charging system using the IIT-developed high voltage unit was only 0.70 watts.

## 3.4 Electrostatic Low Volume Sprayer

The hand-held electrostatic low volume sprayer consists of a spinning-disc with an induction-type electrostatic charging system which is connected to a carrying handle (Fig. 4) The handle is a 3.8 cm (1.5 inch) diameter PVC pipe connected to a 2 cm (0.8 inch) aluminum pipe. The PVC pipe contains eight 1.5 volt dry cells (size "D"), a high voltage power supply, and a voltage regulator. The dry cells powered both the high voltage power supply and the motor. The power switch for the DC motor and high voltage power unit as well as the disc speed control knob can be found at the midpoint of the carrying frame. The sprayer weighs 3.1 kg with fully loaded spray liquid container. The spray liquid and the batteries account for most of the weight. Since these weights are well-balanced between both ends, the sprayer is very convenient and light to carry.

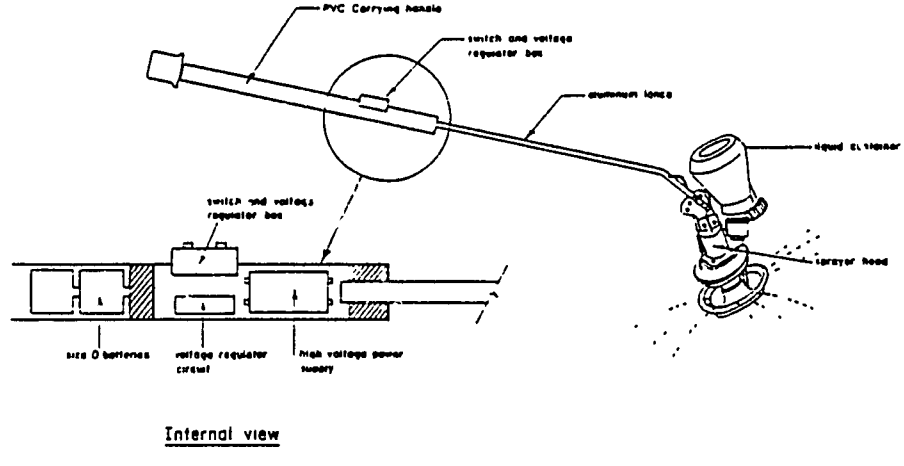


Fig. 4. The hand-held electrostatic low volume sprayer.

The voltage in the dry cells decreases as power is used, but by resting the batteries repolarization occurs and voltage partially recovers. A total of six hours of spraying (Fig. 5) should be possible before the voltage drops to about 3.5 volts when one set of batteries (8 size D dry cells) is used and the sprayer

is run continuously for 40 mins, i.e. spraying time before refilling a 1 liter liquid container when the liquid flow rate is 25 mL/min, and then rested for 15 mins, i.e., approximate time for refilling, and then run again until the next refilling. If spraying is done intermittently for not longer than 2 hours a day, the total life of the battery could be increased considerably.

By adjusting the disc speed control knob, input voltage to the DC motor can be varied between 2 to 7 volts and disc rotational speed between 1000 to 6000 rpm (Fig. 6). Disc speed should be adjusted depending on the type of application. For example, for herbicide application a disc speed of between 2000 to 3000 rpm is recommended. For insecticide application, a disc speed higher than 4000 rpm should be used.

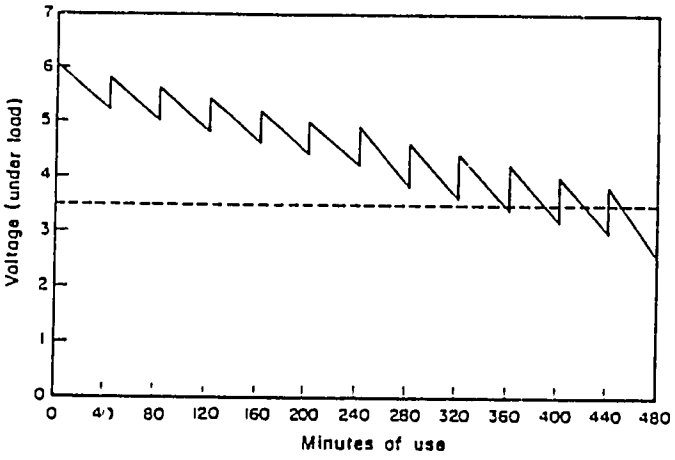


Fig. 5 Reduction of input voltage to the DC motor with minutes of use.

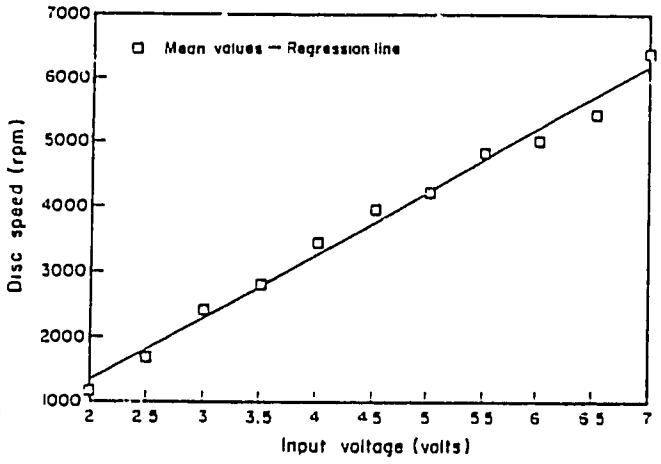


Fig. 6. Input voltage to the motor vs. disc speed.

## 3.5 Droplet Charge

Figure 7 shows the set-up used to measure the spray cloud current. An aluminum cylindrical cup, 75 cm in diameter and 50 cm in height, intercepted all the charged spray from the sprayer. As the charged spray entered the cup, an equal and opposite charge flowed from earth to electrically balance the charge residing in or on the cup. Current in the cup was measured by an electrometer (Model 614 from Keithley Instruments). To ensure that no induced charges were created on the aluminum cup from some external sources, a grounded circular screen was placed outside the cup. The ratio of spray current to liquid flow rate gives the charge-to-mass ratio in mC/kg.

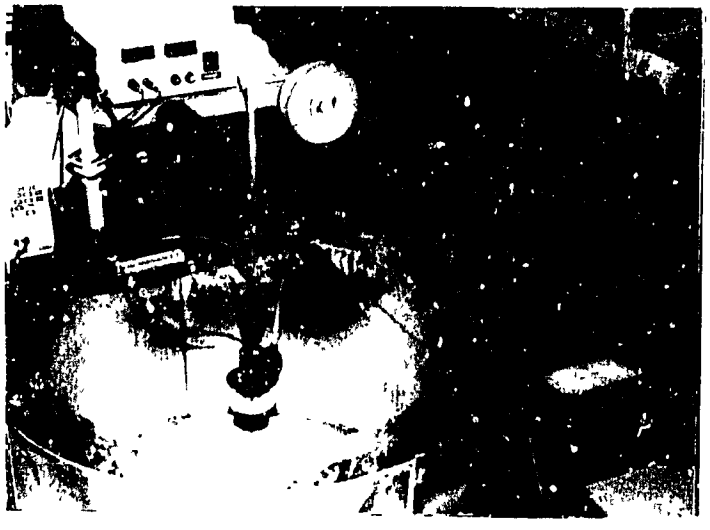

Fig. 7. Experimental set-up for measuring spray cloud current.

In addition to the power requirement, the spray charge-to-mass ratio was the main basis for determining the optimum design and operating parameters of the induction-type electrostatic sprayer. Design and operating parameters considered were: electrode-liquid gap, electrode material, electrode surface area, electrode voltage, disc speed, and liquid flow rate. Results showed that increasing the electrode-liquid gap reduces the charge-to-mass ratio and increased the voltage levels at which dielectric breakdown of the air surrounding the electrode occurs. A very close gap ($\leq$ 1 mm) was detrimental to the charging process as dielectric breakdown occurred at very low electrode voltage and hence produced low spray charging performance. Electrode material and surface area had little effect on the charging efficiency. Aluminum gave better performance than zinc and brass. Small-size electrodes provided better charging performance than larger-area electrodes.

Results also showed that increasing the electrode voltage also increased the spray charge-to-mass ratio proportionally up to 4.0 kV which then gradually fell (Fig. 8). Peak charging could be observed at electrode voltages between 3.5 to 4.5 kV. A higher spray charge-to-mass ratio was obtained at lower liquid flow rates, i.e., 25 mL/min. At 4000 rev/min disc speed, a spray charge of up to 2.1 mC/kg was obtained at 25 mL/min. This charge was reduced to 1.0 mC/kg when the flow rate increased to 75 mL/min. Contrary to the effect of flow rate, disc rotational speed has a positive effect on the charge-to-mass ratio (Fig. 9). More efficient charging was achieved at higher disc speeds than at lower disc speeds. The increased number of finer droplets produced when disc speed is increased results in a greater surface area of the spray exposed to the charging electrode. Consequently, higher charging efficiency could be expected.

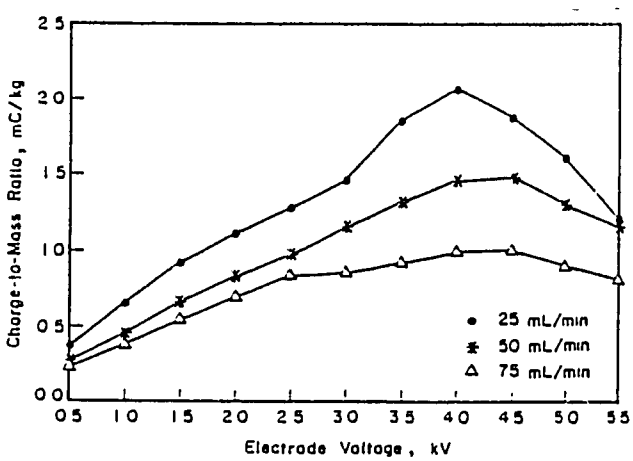


Fig. 8. Effect of electrode voltage and liquid flow rate on charge-to-mass ratio at 4000 rpm disc rotational speed

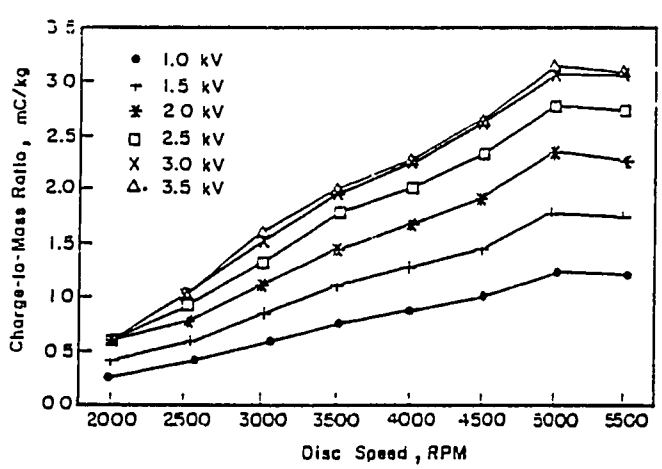


Fig. 9. Effect of disc speed on charge-to-mass ratio at different electrode voltages.

Optimum charging performance up to 3.1 mC/kg spray charged by the induction-type charging system was attained at the following levels of the parameters:

| | |
|---|---|
| Electrode-liquid film gap | = 3 mm |
| Electrode material | = Aluminum |
| Size of electrode ring | = 8 mm |
| Electrode voltage | = 3.5 kV |
| Disc speed | = 5000 rpm |
| Liquid flow rate | = 25 mL/min |

## 3.6 Droplet Size

Droplets were collected using a magnesium oxide coated glass slide prepared by burning a 6 cm long strip of magnesium ribbon below a glass slide. To collect the droplets, the glass slide was placed on a flat surface about 50 cm below the sprayer. The sprayer moving at 0.2 m/s sprayed fluorescent solution onto the glass slide. A Fleming particle size analyzer (Fig. 10) was used to measure droplet size and distribution. Droplet size was expressed in volume median diameter (vmd) and number median diameter (nmd).

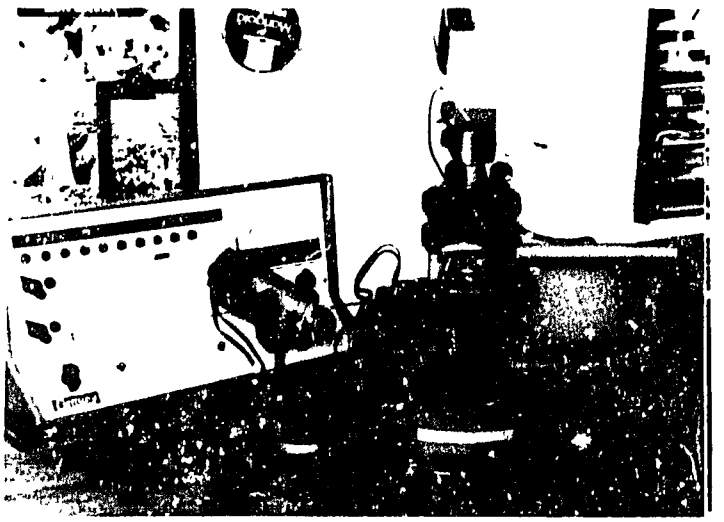

Fig 10. The Fleming Particle Size Analyzer for droplet size measurement

Droplet size (vmd) obtained from the electrostatic spinning disc sprayer ranged from 109 to 183 $\mu$m (Table 1). Droplet size was reduced by 1 to 10% due to electrostatic charging. The droplet spectrum uniformity expressed in the vmd/nmd ratio ranged from 1.33 to 1.92. This corresponds to a very uniform droplet spectrum compared to that of a typical flat fan hydraulic nozzle which ranged from 2.5 to 6.0 (Bode et al., 1983).

**Table 1.** Droplet sizes produced by the electrostatic spinning disc sprayer.

| Flow rate (mL/min) | Disc speed (rpm) | nmd[1] | vmd[2] | vmd/nmd |
|---|---|---|---|---|
| 25 | 2000 | 117 | 183 | 1.56 |
| | 3000 | 111 | 154 | 1.38 |
| | 4000 | 90 | 126 | 1.39 |
| | 5000 | 81 | 118 | 1.46 |
| 50 | 2000 | 115 | 177 | 1.54 |
| | 3000 | 103 | 153 | 1.48 |
| | 4000 | 90 | 119 | 1.33 |
| | 5000 | 80 | 111 | 1.39 |
| 75 | 2000 | 108 | 175 | 1.62 |
| | 3000 | 99 | 145 | 1.47 |
| | 4000 | 88 | 116 | 1.32 |
| | 5000 | 76 | 109 | 1.42 |

[1] number median diameter, [2] volume median diameter

## 3.7 The Field Sprayer Simulator Laboratory

An enclosed chamber 15 m long x 2.4 m wide x 2.6 m high was used as laboratory to facilitate fundamental research on spray application equipment. The laboratory (Fig. 11) consists of a sprayer carrying frame, sprayer track, target table, motor and cable arrangement, and a control station. The sprayer carrying frame holds a spinning disc sprayer, high voltage power supply unit, DC power supply, and spray liquid. This frame can be moved along a 10-m sprayer track through a motor-driven cable at 0.2 m/s (3 km/hr) to simulate a field sprayer. The control station consisted of switches to operate the laboratory sprayer. The operations include running of the spray carrying frame and providing power to the spinning disc sprayer. Both artificial and living plants could be arranged on the target table to simulate real field conditions.

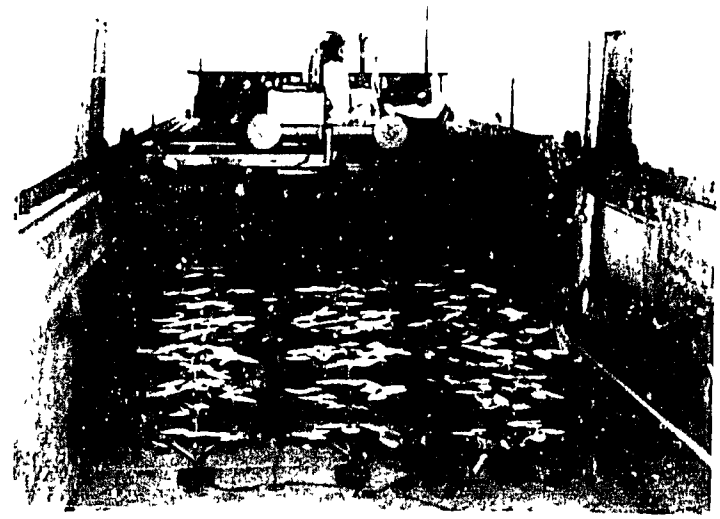

Fig. 11 The field sprayer simulator laboratory.

## 3.8 Laboratory Experiments

Two sets of artificial targets, one modeled as a rice plant and the other as a soybean plant, were constructed to allow repeatable laboratory deposition experiments. Dimensions of the rice-modeled targets were based on average plant height, total leaf surface area and approximate shape of a 63-day old rice plant. These targets were mounted vertically on the target table and spaced at 50 cm x 50 cm. The second type of target, i.e., six-level aluminum targets modelled as soybean plants, were constructed mainly to determine whether electrostatic charging could improve the uniformity and penetration of spray deposits on the plants. To measure deposition on front and backside of the leaves, two aluminum leaves of the same size and shape were clipped together and attached to the stem. Nine artificial plants were positioned in three parallel rows at 50 cm distance on either side to simulate actual field arrangement.

A 2.0 g fluorescent dye (Fluorescein-Natrium reinst from MERCK) diluted into 1 L de-ionized water was used as spray liquid throughout the test. The electrical resistivity of the fluorescent solution measured at 24°C and viscosity were 133.4 Ω-cm and 2 mPa-sec, respectively. Fifteen minutes after spraying the targets, three sample leaves from each level of the plants were removed and put into a plastic container containing 400 mL de-ionized water. The concentration of tracer was quantified using a Sequoia-Turner Model 450 Digital Fluorometer. The deposition efficiency (D) is the percentage of total tracer collected on the targets along the spray width to the total tracer sprayed by the sprayer.

On rice-modelled targets, deposition efficiency increased linearly with spray charge-to-mass ratio. A maximum of two-fold increase in deposition efficiency due to electrostatic charging was achieved. On soybean-modelled targets, charging resulted in 1.6-to 2.0-fold increase in deposition efficiency over uncharged spray application from spinning disc sprayer (Table 2).

**Table 2.** Relative increase in deposition efficiency in soybean-modelled targets with electrostatic charging (2.5 kV electrode voltage).

| Disc speed (rpm) | Flow rate (mL/min) | Deposition Efficiency (%) Uncharged | Charged | Charged/ Uncharged |
|---|---|---|---|---|
| 3000 | 25 | 40 | 75 | 1.9 |
| | 50 | 32 | 64 | 2.0 |
| | 75 | 33 | 55 | 1.7 |
| 3500 | 25 | 42 | 76 | 1.8 |
| | 50 | 38 | 64 | 1.7 |
| | 75 | 39 | 62 | 1.6 |
| 4000 | 25 | 53 | 94 | 1.8 |
| | 50 | 45 | 86 | 1.9 |
| | 75 | 42 | 79 | 1.9 |

Figure 12 illustrates the effect of electrode voltage on the deposition efficiency for 3000 and 4000 r/min disc speeds. Deposition efficiency increased linearly with electrode voltage up to an optimum value at 2.5 kV. There was either no or little change in the deposition efficiency when the electrode voltage was further increased from 2.5 to 3 kV. Although the charge-to-mass ratio still increased linearly up to about 3.5 to 4.5 kV, the data suggests that deposition efficiency would not considerably increase further with electrode voltage beyond 2.5 kV.

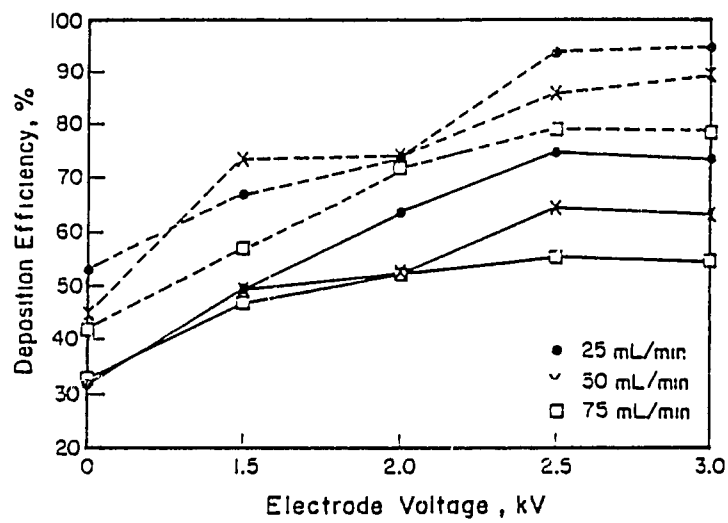


Fig. 12. Effect of electrode voltage on deposition efficiency at different flow rates for 3000 (solid line) and 4000 (dashed line) rpm disc speed.

The deposition efficiency of both charged and uncharged spray increased as rotational speed increased. Increase in deposition efficiency was expected since droplet size decreases linearly with disc rotational speed (Marchant, 1985). Increasing flow rate had an adverse effect on deposition efficiency. Deposition efficiency decreased from 40% to 32% as flow rates increased from 25 to 50 mL/min. The slight increase in deposition efficiency as flow rate increased from 50 to 75 mL/min was found insignificant at $P < 0.01$ level. It was found that as flow rate is increased from 25 to 50 mL/min the total deposition on the target also increased.

The greater proportion of this deposition increase was found at the upper parts of the target and only a very small proportion was obtained by intermediate and lower parts. The data showed that the first two top levels received about 71% of the total deposition for uncharged application and 55% for charged application. Deposition of the last two bottom levels accounted for only 12% of total deposition for uncharged and 18% for charged application. No leaf underside deposition was noted for uncharged spray

application. For charged spray application, leaf underside deposition was observed only at the first two top levels of the target and accounted only between 4 to 10% of the total deposition.

## 3.9 Field Experiments-AIT, Bangkok

### 3.9.1 Swath Width

To determine the swath width, a lath with filter papers stapled to it was placed across the direction of travel of the operator. Wind speed was recorded as 0.7 to 2.0 m/s and the nozzle height was maintained at 30 cm. A graph such as shown in Fig. 13 was prepared to show the deposition density (ng. of tracer materials per unit area) collected in the filter papers at different distances from the sprayer head. Results showed that spray width extended from about 1.2 m upwind up to about 4.4 downwind. Taking a 0.5 m overlap on the upwind and 1.0 m on the downside side, the swath width of about 4.0 m could be used. Swath width is very sensitive to changes in wind speed and nozzle height. As these parameters increase, the swath width is expected to increase as well, but the deposition density along the swath width decreases.

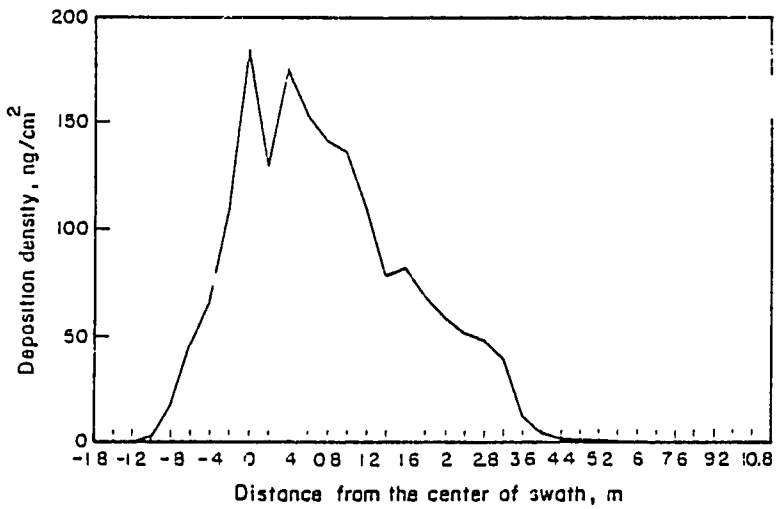


Fig. 13. Chemical deposits (ng/cm²) across the direction of spraying.

### 3.9.2 Field Capacity

Field capacity is a function of travel speed, swath width, and time for refilling, chemical mixing, adjustment of disc speed and maintenance, etc. When spraying with the ELVS, the operator, who could hardy see the spray, had a tendency to walk slowly to assure sufficient coverage on the plant. The travel speed was found to be very slow ranging between 0.8 to 1.0 km/hr as compared to 1.2 to 1.4 km/hr for the HNS. However, a mean droplet density of 27 drops per $cm^2$ was observed even at 1.5 km/hr in the case of ELVS. This indicates that sufficient spray coverage could be achieved at higher travel speeds.

Table 3 gives the time needed to perform different activities to spray one hectare of insecticide in a rice field using the ELVS at different flow rates and the HNS. Swath width and travel speed are the same for either sprayer, hence, the actual spraying is the same. The ELVS at 75 mL/min needs only 20 li of water to spray while the HNS needs as much as 200 li. With the assumed time of 10 mins to haul 15 li of water to the field, a total of 2.2 hours are required for hauling water for the HNS and only 14 mins for the ELVS. More time is also needed for the preparation and mixing of spray solution in the HNS since a large volume of water is involved and more refilling of the liquid tank is required. Spraying with the HNS is also strenuous for the operator and hence more rest time is needed.

**Table 3.** Time (mins) needed to spray one hectare of rice field using the electrostatic low volume sprayer (ELVS) and the knapsack hydraulic nozzle sprayer (HNS).

| Activity | ELVS at different flow rates (mL/min) 25 | 50 | 75 | HNS at 620 (mL/min) |
|---|---|---|---|---|
| Actual spraying | 267 | 267 | 267 | 267 |
| Hauling of water (10 mins per 15 li) | 5 | 10 | 14 | 133 |
| Preparation/chemical mixing | 29 | 58 | 82 | 117 |
| Turning time | 30 | 30 | 30 | 30 |
| Resting (5 min/refill for ELVS) (15 min/refill for HNS) | 35 | 70 | 100 | 210 |
| Total time (min) | 366 | 435 | 493 | 757 |
| Total time (hr) | 6.1 | 7.3 | 8.2 | 12.6 |

### 3.9.3 Deposition Characteristics

When spraying with the electrostatic spinning-disc sprayer, the operator held the sprayer with the disc positioned 30 cm above the crop (Fig. 14). The operator moved perpendicular to the wind direction and away from the spray drift, covering five rows in rice plants and two rows in soybean plants. For spraying over tall corn plants, the sprayer was held at about 45 degrees to the horizontal plane facing the sides of the plants and was moved through an arc of 90 degrees up and down each plant along the near side of the row. The operator walked at a distance of 1 m from the base of the plants. For the standard hydraulic nozzle sprayer, the operator swung the nozzle lance across the field covering five rows of rice plants and two rows of soybean plants. In corn plants, the nozzle was held 0.5 m from the plants and was moved up and down each plant while the operator moved along the row.

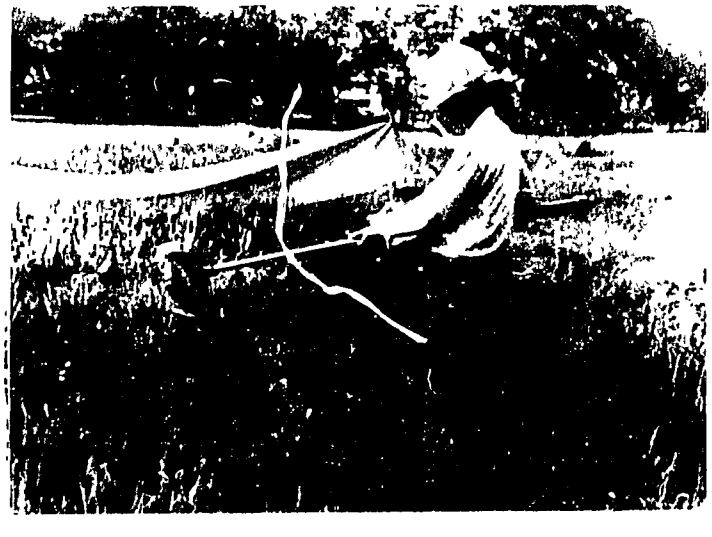

Fig. 14 Field spraying with the electrostatic low volume sprayer.

To measure spray deposition over plant leaves, three different deposition samples were used:

a) Entire leaf or leaf cuts. Sizes of these samples include 100 mm long rice leaf, whole leaf of soybean, and about 60 x 60 mm leaf in corn trials. For these samples, the tracer deposition of the entire leaf, front and undersides was measured.

b) Gummed label papers were stuck on the front and underside of leaves to quantify leaf front and underside deposition. Sizes of the label papers were: 10 x 20 mm in rice, 19 x 38 mm in soybean, and 20 x 30 mm in corn.

c) Water-sensitive paper (Ciba Geigy, 25 x 75 mm) was used to quantify droplet density. These samples were stapled on the plant leaves in soybean and corn trials and placed horizontally on iron stands in rice trials.

A 2.0 g fluorescent dye diluted into 1 L de-ionized water was used as spray liquid throughout the test. The fluorescent tracer concentration was quantified using a Sequoia-Turner Model 450 Digital Fluorometer. Deposition was expressed in terms of amount of tracer deposit per unit leaf area (total of top and bottom surfaces) based on a 1000 g/ha tracer application rate.

Table 4 summarizes the deposition characteristics from different spray application methods. The crop and the location where the leaf samples were taken, i.e, top, middle and bottom parts of the plant are shown in the first column. Chemical deposits denotes the amount of fluorescent tracer collected on the leaf samples divided by the tracer application rate. It is expressed as nanogram of tracer per $cm^2$ of leaf surface area (total of upper and underside) divided by nanogram of tracer discharge by the disc/nozzle per hour. Droplet density is expressed in drops per $cm^2$ of the water sensitive paper.

In rice and soybeans, charged spray application significantly improved chemical deposits at any elevation of the plant over uncharged spray application. In rice, chemical deposits from charged spray were 1.6 and 3.9 times higher than uncharged sprays from spinning disc and hydraulic nozzle sprayers, respectively. A 1.5-fold increase in chemical deposits due to charging was obtained in soybeans. In corn plants, charged spray application did not show a statistically significant ($P < 0.01$) change in chemical deposits over uncharged spray applications. Failure of the electrostatic sprayer to improve deposition was attributed to the difficulty of directing all the spray onto the sides of the corn canopy. During spraying, the disc was held at about 45 degrees to the horizontal plane facing the near side of the canopy. Less than half of the spray discharged from the disc could be directed to the canopy while the rest was mainly deposited on the ground. In addition, as the disc was positioned too close to the canopy, droplets emitted from the disc immediately hit the plant surfaces before electrostatic and gravitational forces came into effect.

One of the advantages of electrostatic spraying is the ability of charged sprays to deposit into partially hidden parts of the plants, thus, increasing the spray coverage. In contact insecticide application, spray deposition on the undersides of leaves where most insects are stationed is very important for satisfactory insect control. Results from the field trials revealed that charging provided up to a 2-fold increase in underside deposits in soybeans but showed insignificant effect on underside deposits for rice and corn plants.

### 3.9.4 Drift Experiments

Drift trials were conducted in a 75 x 100 m flat area covered with short grass. Filter papers (9 cm diameter) were used as drift collectors. Each collector was affixed to a 9 x 9 cm piece of plywood and placed over a 0.45 x 20 m cloth perpendicular to the spraying line and parallel to the wind direction. The farthest upwind collectors were put 20 cm outside the swath. Five passes of the sprayer were made for each measurement. The spray solution was the same as in the deposition experiments. Drift is total

**Table 4.** Comparison of charged and uncharged spray application methods on three field crops.

| Crop/Location | Chemical deposits on plant leaves ($ng/cm^2$)[1] | | | Chemical deposits on undersides of leaves (%)[2] | | | Droplet density on water sensitive paper ($drops/cm^2$) | | |
|---|---|---|---|---|---|---|---|---|---|
| | ELVS[3] | SDS | HNS | ELVS | SDS | HNS | ELVS | SDS | HNS |
| Rice | | | | | | | | | |
| Top | 501 | 309 (1.6)[4] | 143 (3.5) | 36 | 42 | 30 | 137 | 80 | –[5] |
| Middle | 356 | 235 (1.5) | 91 (3.9) | 27 | 34 | 13 | 57 | 55 | 44 |
| Bottom | 298 | 190 (1.6) | 60 (5.0) | 26 | 27 | 9 | 48 | 22 | 18 |
| **mean** | **385** | **245 (1.6)** | **98 (3.9)** | **30** | **34** | **17** | **81** | **52** | |
| Soybean | | | | | | | | | |
| Top | 439 | 291 (1.5) | 231 (1.9) | 18 | 12 | 2 | 132 | 64 | 50 |
| Middle | 291 | 264 (1.1) | 199 (1.5) | 23 | 8 | 3 | 95 | 46 | 40 |
| Bottom | 211 | 86 (2.4) | 206 (1.0) | 2 | 0 | 0 | 74 | 33 | 37 |
| **mean** | **314** | **214 (1.5)** | **212 (1.5)** | **14** | **7** | **2** | **100** | **48** | **42** |
| Corn | | | | | | | | | |
| Top | 104 | 91 (1.1) | 159 (0.6) | 7 | 10 | 6 | 37 | 12 | – |
| Middle | 115 | 144 (0.8) | 128 (0.9) | 16 | 12 | 9 | 47 | 33 | – |
| Bottom | 130 | 101 (1.3) | 88 (1.5) | 14 | 8 | 7 | 51 | 25 | – |
| **mean** | **116** | **112 (1.0)** | **125 (0.9)** | **12** | **10** | **7** | **45** | **23** | |

1. Based on 1000 g/ha chemical tracer application rate.
2. Expressed as a percent of the sum of upperside and underside leaf deposits on label paper deposition samples.
3. Application method codes:
   ELVS = Electrostatic Low Volume Sprayer (Charged Spray Application)
   SDS = Spinning Disc Sprayer (Uncharged Spray Application)
   HNS = Hydraulic Nozzle Sprayer (Uncharged Spray Application)
4. The number in parenthesis represents the ratio of deposits of charged spray over uncharged spray.
5. Droplets could not be counted because too many drops were overlapping.

chemical deposits collected outside a predetermined swath width (1.5 m) expressed as a percent of the total chemical deposits on all collectors. Drift, therefore, includes not only those chemicals deposited outside the spray width but also those chemicals which could not be collected because they remain airborne beyond the farthest drift collector.

Drift was measured at different atomizing disc heights above the ground, i.e., 30, 50 and 70 cm for both charged and uncharged spray applications. Twenty-nine percent drift reduction was attained at 70 cm disc height while 4% at 30 cm height (Fig. 15). As expected, drift increases with atomizing disc height for both charged and uncharged spray applications.

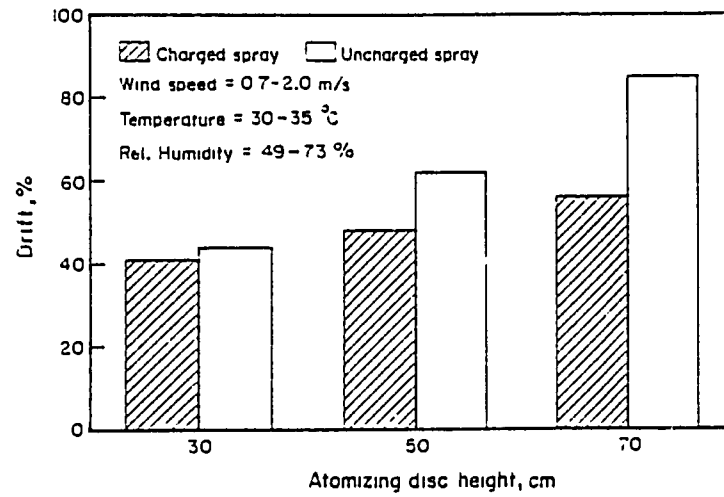


Fig. 15. Effect of electrostatic charging on drift at different disc height.

## 3.10 Field Experiments-IIT, Haifa, Israel

Comparative performance of uncharged and charged spray application using the ELVS was determined in two separate tests. The first test was conducted in a tomato greenhouse and the other in the field with 0.2 to 0.3 m tall common mallow. In the greenhouse, the tomato plants (2.5 m tall) were planted in pots which were arranged in rows. Sample pots for charged spray application were electrically connected to the ground. The performance parameters were leaf droplet density and coverage. Droplet density was determined with the aid of a water sensitive paper. Leaf area covered with the spray was estimated using 0-5 grades. The spray solution contained a fluorescent tracer.

The following conclusions were made: a) the charged spray application using the ELVS had significant advantage over the uncharged spray application in terms of area and quality of spray coverage on the leaves; b) the ELVS performed better than an uncharged spinning disc sprayer in high and narrow canopy and in short plants; c) spray droplets from the ELVS have poor penetrating ability, as a result only the leaf's surface facing the spray receives a spray coating; and, d) more pest control tests have to be done to examine the sprayer's efficiency.

## 3.11 Cost Analysis

One of the major rice pests is rice stemborer *Scirpophaga incertulas*. Among the recommended insecticides for this pest is Azodrin (Monocrotophos). Usually 2-4 sprays of Azodrin per cropping season are required. This section compares the annual cost of spraying this insecticide on a one hectare rice field using the electrostatic low volume sprayer (ELVS) and the knapsack hydraulic nozzle sprayer (HNS). Assumptions with regard to the method and rate of spraying are as follows:

| | | |
|---|---|---|
| a) | swath width | = 1.5 m for both ELVS and HNS |
| b) | travel speed | = 1.5 km/hr |
| c) | daily labor rate | = 120 Baht per 8-hour day |
| d) | no. of cropping seasons per year | = 2 |
| e) | no. of spraying per season | = 4 |

In Table 5, the annual cost of sprayer, labor, chemical, and battery for spraying insecticide in rice field using the ELVS and HNS are presented and taken into account. The estimated market price (25 baht is approximately US$ 1.0) of the ELVS has the following breakdown:

| | | | |
|---|---|---|---|
| a) | spinning-disc unit | | = 400 Baht |
| b) | carrying handle and lance | | = 200 |
| c) | high voltage power supply | | = 550 |
| d) | voltage regulator circuit | | = 50 |
| e) | labor | | = 500 |
| | | Subtotal | = 1700 |
| | | 15% profit | = 255 |
| | | Total | = 1955 or approx. 2000 Baht |

The labor and battery costs were based on the total time needed to spray one hectare and the actual spraying time for each sprayer. The chemical dosage for the ELVS was taken as half of the recommended rate. This was based on the field trial results that showed chemical deposits increased at least 50% with electrostatic charging. The calculations in Table 5 show that the most economical method of spraying is by using the ELVS operated at the lowest liquid flow rate, i.e., 25 mL/min. This could be attributed mainly to the reduction in labor cost for hauling water and chemical application rate.

**Table 5.** Annual cost (Baht) of using electrostatic low volume sprayer and knapsack hydraulic nozzle sprayer.

| Cost classification | ELVS at different flow rates (mL/min) 25 | 50 | 75 | HNS at 620 (mL/min) |
|---|---|---|---|---|
| Fixed cost | | | | |
| sprayer cost depreciated over 2 yrs. | 1000 | 1000 | 1000 | 500 |
| Variable costs | | | | |
| Labor cost | 1098 | 1314 | 1476 | 2268 |
| Chemical cost | | | | |
| Azodrin 56% EC, rate=300 cc/ha cost = 0.3 baht/cc | 360 | 360 | 360 | 720 |
| Battery cost | | | | |
| 1 set battery = 1 ha spraying | 320 | 320 | 320 | - |
| Total cost | 2778 | 2994 | 3156 | 3308 |

## 4. IMPACT, RELEVANCE AND TECHNOLOGY TRANSFER

Electrostatic charging has been used in western developed countries to increase spray deposition on plants, minimize the hazard of drift, and reduce the amount of chemical active ingredient to be used. Electrostatic charging systems have been developed for use mainly in tractor-mounted sprayers which use an electrostatic pneumatic nozzle sprayer in the U.S. (Law, 1978) and an electrostatic spinning-disc sprayer in U.K. (Marchant, 1985). The Electrodyn is a hand-held electrostatic sprayer which is being used in cotton plantations in Africa. However, this sprayer can be used only with a specially-made oil-based formulation as a spray solution.

The development of a low-cost, hand-held electrostatic low volume sprayer can make advanced technology available to the small farmers in the developing countries. It offers more efficient and safe pesticide application and reduction of chemical application rate. It is also very light to carry and requiring only about 20 li of spray volume per hectare as compared to about 200 li/ha in conventional spraying. Developing countries have now an alternative technology that could replace the traditional high-volume, inefficient, and strenuous hydraulic nozzle spraying.

Spraying toxic chemicals has led to health disorders and even deaths. At least three quarters of all deaths from pesticide poisoning occur in the developing countries (Guide to Pesticides, International Agricultural Development, May/June 1992). One reason could be attributed to the equipment being used. Most farmers in developing countries use a knapsack hydraulic nozzle sprayer for pesticide application. This sprayer produces numerous fine drops or mist that could be inhaled by the operator and deposited into the operator's body. With the new electrostatic low volume sprayer, production of fine and driftable droplets is avoided. In fact, this sprayer emphasizes applying the correct and uniform size of droplets for efficient and safe pesticide application. Electrostatically charged spray drops get attracted to the plant target and hence minimize the operator's contamination.

Excessive use of chemical pesticide in developing countries is also a major concern as it not only drains foreign exchange but also causes environmental pollution. The development of the electrostatic spinning-disc sprayer is very significant in this respect as it could greatly reduce wastage of chemicals during spraying. It may also reduce the chemical application rate by half which means a great reduction in the importation of chemical pesticides to the developing countries.

The project has also resulted in the establishment of a spraying laboratory at the Asian Institute of Technology. It provides strategic and fundamental studies in pesticide spraying using various types of nozzles, different nozzle operating conditions and types of plant targets (artificial and real). Other essential equipment such as a Fluorometer for quantification of chemical tracers in deposition experiments and an Electrometer for measurement of spray charge in electrostatic spraying have also been acquired. The technical specifications of the laboratory as well as the methodologies used in spraying experiments have been published in a technical journal.

The first prototype of the electrostatic low volume sprayer was demonstrated to farmers in Thailand through the Department of Agriculture. Testing was also done in Israel through the collaborating institution, the Israel Institute of Technology (IIT), Haifa. Results of their test also showed more additional deposition advantages with the use of the electrostatic sprayer. Also, ten prototypes are now ready for testing in Asian countries, such as: the Philippines, India, Sri Lanka, and Pakistan. Information brochure with technical drawings of the new sprayer will be sent to institutions and individuals in the developing countries.

The sprayer can be easily constructed in any developing country. It is mainly made of molded plastic. The high voltage power supply unit however is not commercially-available in most developing countries. However, IIT, Haifa had developed a high-voltage power supply unit small enough to fit inside the carrying handle of the sprayer. It costs only US$ 22.00 for large orders.

## 5. PROJECT ACTIVITIES/OUTPUTS

### 5.1 Meetings Attended

The Principal Investigator attended the following meetings:

1. XXVth Annual Convention Meeting of the Indian Society of Agricultural Engineers, January 1989.

2. 1989 International Summer Meeting of the American Society of Agricultural Engineers (ASAE), June 1989.

3. 1990 International Summer Meeting of the American Society of Agricultural Engineers (ASAE) held at Columbus (Ohio) on June 24-27, 1990.

4. International Agricultural Engineering Conference and Exhibition at the Asian Institute of Technology on December 3-6, 1990.

5. 1991 International Winter Meeting of the American Society of Agricultural Engineers (ASAE) in Hyatt Regency Chicago, 151 E. Wacker Drive, Chicago, Illinios on December 17-20, 1991.

6. International Agricultural Mechanization Conference at Beijing, China on October 16-20, 1991. During this meeting, the Principal Investigator demonstrated the use of the electrostatic spinning-disc sprayer. The demonstration attracted a large crowd of visitors who were interested in its technical details.

7. International Workshop on Small Sprayers, sponsored by IRRI and funded by ADB, Manila, held at Bombay, India on November 18-20, 1991. During the workshop, the Principal Investigator demonstrated the performance of newly developed electrostatic low volume sprayer. Many delegates showed interest to adopt this sprayer in their respective countries.

### 5.2 Published Papers

1. Dante, E.T. and C.P. Gupta. 1991. Deposition studies on an electrostatic spinning disc sprayer. Transaction of the American Society of Agricultural Engineers 34(5): 1927-1934.

2. Gupta, C.P.; Singh, G.; Muhaemin, M. and E.T. Dante. 1992. Field performance of a handheld electrostatic spinning-disc sprayer. Transaction of the American Society of Agricultural Engineers (in press).

3. Muhaemin, M.; Gupta, C.P. and E.T. Dante. 1992. Optimizing design parameters of electrostatic spinning disc sprayer. Indonesian Journal of Agricultural Engineering Research (Jurnal Teknik Pertanian) 2(1): 20-31.

4. Hadi, S. and C.P. Gupta. 1992. Computer program for insecticide application to rice crop. Paper accepted for publication in the Transaction of the American Society of Agricultural Engineers.

## 5.3 Papers Presented in Meetings

1. Gupta, C.P., G. Singh, and M. Parameswarakumar. 1989. Charging system for hand-held electrostatic spinning disc sprayer. Presented during the International Summer Meeting of the American Society of Agricultural Engineers (ASAE), June 1989. ASAE paper no. 89-5011.

2. Gupta, C.P. and M. Parameswarakumar. 1989. Electrostatic charging of agricultural spray droplets-a review. Presented during the XXVth Annual Convention Meeting of the Indian Society of Agricultural Engineers, January 1989.

3. Ganapathy, S. and G. Singh. 1990. Development of an electrostatic sprayer. Presented during the International Summer Meeting of the American Society of Agricultural Engineers, June 1990. ASAE paper no 90-1022.

4. Hadi, S. and C.P. Gupta. 1990. Computer program for insecticide application to rice crop. Presented during the International Summer Meeting of the American Society of Agricultural Engineers, June 1990. ASAE paper no. 90-1059.

6. Dante, E.T. and C.P. Gupta. 1990. Deposition studies on an electrostatic spinning disc sprayer. Presented during the International Agricultural Engineering Conference to be held at AIT on December 1990.

7. Dante, E.T. and C.P. Gupta. 1990. Optimization of design parameters for electrostatic spinning disc sprayer. Presented during the 1990 International Winter Meeting of the ASAE, Hyatt Regency Chicago, Chicago, Illinois, U.S.A.

8. Gupta, C.P. and R.B. Alamban. 1991. Development of knapsack electrostatic double spinning disc sprayer. ASAE Paper No. 915532. Presented during the 1991 International Winter Meeting of the ASAE.

## 5.4 Patent

1. For patenting the electrostatic spinning-disc sprayer in Israel, correspondence between AIT, Bangkok and IIT, Haifa is in progress.

## 5.5 Brochure

1. Electrostatic Low Volume Sprayer for Small Farmers. A brochure showing the technical specifications, operating procedures, and technical drawing of the ELVS.

## 6. PROJECT PRODUCTIVITY

The project accomplished all the proposed objectives.

## 7. FUTURE WORK

1. Efforts should be continued to reduce the cost of high voltage power supply.

2. Further field testing of the electrostatic spraying using various types of liquid chemical formulations in different countries in Asia.

3. Extension work to promote the use of the electrostatic sprayer among small-farm holders in developing countries.

4. Work must be done to promote commercialization of the electrostatic sprayer.

## 8. LITERATURE CITED

Bailey, A.G. 1986. The theory and practice of electrostatic spraying. Atomisation and Spray Technology 2:109-125.

Bode, L.M.; Butler, B.J.; Pearson, S.L. and Bouse, L.F. 1983. Characteristics of the Micromax rotary atomizer. Trans. of the ASAE 26:999-1004.

Bowen, H.D.; Hebblethwaite, and Carleton, W. 1952. Application of electrostatic charging to the deposition of insecticides and fungicides on plant surfaces. Agricultural Engineering 33(6):347-350.

Cauquil, J. 1987. Cotton-pest control: A review of the introduction of ultra-low-volume (ULV) spraying in sub-saharan French speaking Africa. Crop Protection 6(1):38-42.

Cobine, 1958. Gaseous Conductors Theory and Engineering Applications. Dover Publications Inc., New York.

Dante, E.T. and C.P. Gupta. 1991. Deposition studies on an electrostatic spinning disc sprayer. Trans. of the ASAE 34(5): 1927-1934.

Himel, C.M. 1982. Analytical systems for pesticide spray transport and impingement. ASAE Paper No. 821001.

Hussain, M.D. and Moser, E. 1986. Some fundamentals of electrostatic spraying. AMA 17:39-45.

Jeyaratnam, J. 1985. Health problems of pesticide usage in the Third World. British Journal of Industrial Med. 42:505-506

Law, S.E. 1978. Embedded electrode electrostatic induction spray-charging nozzle: theoretical and engineering design. Trans. of the ASAE 21(6):1096-1104.

Law, S.E. 1983. Electrostatic pesticide spraying: concept and practice. IEEE Transactions on Industry Applications IA-19(2):160-168.

Law, S.E. and Bowen, H.D. 1966. Charging liquid spray by electrostatic induction. Transaction of the ASAE 9(4):501-506.

Law, S.E. and Lane, M.D. 1981. Electrostatic deposition of pesticide spray onto foliar targets of varying morphology. Transactions of the ASAE 24(6):1441-1448.

Mabbett, T.H. 1990. Insect pests of cotton set the agenda. Agriculture International, May: 2-3

Marchant, J.A. and Green, R. 1982. An electrostatic charging of spray produced by hydraulic nozzles. Journal of Ag. Engng. Res. 27:309-319.

Marchant, J.A. 1985. An electrostatic spinning disc atomiser. Trans. of the ASAE 28(2):386-392.

Matthews, G.A. 1977. CDA-Controlled Droplet Application. PANS 21(2):213-225.

Matthews, G.A. 1982. Pesticide application methods. Longman, Inc. New York.

Matthews, G.A. 1988. The attack of the charged brigade. New Scientist:55-57.

Matthews, G.A. 1989. Electrostatic spraying of pesticide: a review. Crop Protection 8:3-15.

Miller, P.C.H. 1987. Spray application technology. Agricultural Engineer. 77-84.