PN-AEM-920

41

ICDS FOOD PROCESSING PLANT FEASIBILITY STUDY

JUDSON M HARFER AND G RICHARD JANSEN

Executive Summary

OBJECTIVES

The objectives of this study are to provide the MOSWW and USAID with a feasibility study of alternative approaches to the design of RTE supplementary food processing plants to serve anganwadis in the USAID/ICDS assisted districts of PanchMahals in Gujarat and Chandrapur in Maharashtra State and to make recommendations on the design and equipment of the food processing plants and the needed food products

PROCEDURES

To accomplish these objectives briefings were held at USAID/India with Ms Mary Ann Anderson, Nutrition Officer, the USAID personnel, CARE personnel, UNICEF personnel and Mr M S Dayal and Mr P L Gupta, Secretary and Under Secretary respectively at the MOSWW

Following these briefings an intensive eight day trip to visit food processing plants in India was undertaken This included the Godhra site for a proposed plant, the AMUL plant at Anand, the Sukhada plant at Thane, the MARKFED godown for the proposed plant at Chandrapur, the REFROW plant in Hyderabad, CFTRI and an Energy Food plant in Mysore On return to New Delhi, a visit was made to the Gurgaon Panjeeri plant Based on all information and data obtained in these visit many documents supplied by USAID, and discussions with a number of other groups of individuals, conclusions are drawn and recommendations made

RTE FOODS IN INDIA

Comments on several of the plant visits as follows The AMUL plant at Anand produces Balamul via an expensive pressure cooking, roller drum drying process Grinding is carried out on a pin mill and non fat dry milk, vitamins and minerals are blended in The final product is a fine flour, quite soluble and very satisfactory as an infant cereal Plant sanitation in other operations at AMUL is very good but the baby food plant was not operating due to a labor dispute

The other end of the spectrum was the Sukhada plant at Thane in this process Title II soy fortified bulgur wheat (SFBW) is heated less than two minutes in open pan ovens and mixed with previously heated Title II soyblen oil and local jaggery The resulting blend is hand sieved to remove lumps and bagged The process is highly labor intensive with 48 open pan ovens and 270 workers Hygienic practices were not satisfactory at this plant, and because of the large number of manual steps involved it is highly likely that the product contains a high level of microbial contamination Because of an inadequate roasting procedure, this product cannot be considered precooked

Two much more adequate roasting/grinding/mixing plants were also visited, an Energy Food plant at Mysore and a Panjeeri Plant at Gurgaon In both, cereal and pulse components are adequately roasted in oil fueled or electric roasters followed by grinding and mixing The processes differ, however In the Panjeeri plant, the major ingredients are SFBW, CSM or local wheat and gram flour No vitamins and minerals are added and so only the products made from CSM would be satisfactory from this point In the Energy Food plant, groundnut or soybean cake, vitamins and minerals are also added Another difference is that in the Panjeeri Plant, wheat and gram are roasted together whereas in the Energy Food plant the cereal, pulse and oilseed cake component are roasted separately Both products are judged satisfactory for use in the ICDS program However, it is not clear whether or not these roasted products would be fully satisfactory for infant feeding

The REPRON food plant at Hyderabad is making a weaning and RTE food on a Wenger X-175 extruder in a CARE/UNICEF donated plant The process is highly automated using totally indigenous wheat and soybeans Following, grinding on a pinmill, sugar, nonfat dry milk, vitamins and minerals are added RTE snack foods are also being made in this plant using a slightly different formulation This plant is producing very good products satisfactory for use in the ICDS program The weaning food is a finely ground product that readily gelatinizes in warm water It is judged to be satisfactory for use in feeding infants

ALTERNATIVE PROCESSING SYSTEMS

A thorough analysis was made of three different proposals for the production of RTE weaning foods in India These were two roasting/grinding/mixing technologies which were being proposed by Mixi-Therm and Repron and one low-cost extrusion cooker (LEC) process being proposed by Kaira District Cooperative Milk Producers Union Ltd

It was found that all the necessary equipment for the roasting/grinding/mixing technologies proposed were being manufactured in India Moreover, these systems are currently being successfully operated in India The energy efficiency of the roasting process is however poorer than with the LEC processing system

The LEC processing system would require importations of the extruders and several key pieces of grain processing equipment It seems appropriate to initially, import this equipment until local manufacturers can begin producing the equipment

Labor requirements were highest for the roasting processes The higher labor input meant that the roasted products were more susceptable to contamination Skill requirements for labor were judged similar for all systems

The loss of electrical power would be the most critical for the LEC processes where the material in the extruder would have to be

removed quickly after the power outage to prevent invoking intensive cleanup procefures

The roasting processes do not produce a soluble product capable of making an instant gruel by adding water The LEC process can make such products which have been found suitable for feeding infants 6 mos to 3 yrs/ In addition, the LEC process can make shaped finger foods in great variety to increase the acceptability of the food with older children and mothers The dry powder from the roaster can be flavoured and served as ladoos for variety Acceptability studies need to be performed to document the suitability of the various products

All systems were very cost effective in their production of RTE foods Capital costs were Rs 8 25 x 10^5/MT for roasted Panjeeri to Rs 1 2 x 10^6/MT for extruded foods. The ingredient costs using indigenous inputs for the three processes ranged between 79 to 85% of the finished packaged product costs which indicates the cost effectiveness of all processes

Current full product costs without any profit were estimated for products from the various systems Product costs were dependent upon actual ingredients used to a large extent Energy food had the lowest ration cost at Rs 0 52/80g, while Panjeeri was the highest at Rs 0 67/80g This apparently large difference is due to different ingredient costs

Perhaps, the processing costs per ration produced on each system is the most relevant These were about Rs 0 10/80g with no significant differences among the three systems

PROCESSING PLANTS

The proposed processing site at Chandrapur in the MARIFED godown under construction was examined The 17500 ft^2 site looks potentially suitable but details on lavatory, laboratory, locker,

canteen and office space need to be finalized before the site is accepted Sufficient power, water and access are available to the site

The Godhra site appears well situated for a processing plant The major problem to be resolved is the total land area available for the plant.

The $228,000 budgeted item with ICDS financial plan for processing plants is insufficient An additional $319,000 will be required to establish a 15MT/d plant at Chandrapur and a 22MT/d at Godhra

CONCLUSIONS

Based on the plant visits and detailed analysis of the alternative processing systems the following conclusions are made Both extrusion and roasting/grinding/mixing are appropriate technologies for the production of weaning and RTE foods for use in the ICDS program and both have similar estimated processing costs The advantages of an extrusion process are that it produces a precooked cereal type product that makes smooth "instant" gruel suitable for feeding infants, there is little handling of materials thus producing a hygienic product and it is capable of producing RTE foods in a great variety of shapes, sizes, tastes and textures The major disadvantages are the extruders are not currently made in India and the process is more sensitive to power failures

The advantages of a roasting/grinding/mixing process are that all needed equipment is currently being made in India and roasted products are traditional and familiar foods in India The disadvantages are that the process is not capable of making a precooked cereal type product that makes smooth "instant" gruels suitable for feeding infants, the many separate steps involved provide more opportunity for microbial contamination and the process has little versatility in producing RTE foods with a great variety of sizes and shapes

The MARKFED godown in Chandrapur is generally suitable for the installation of an RTE plant. The Godhra site has the necessary infrastructure to support an RTE plant but land availability remains in question The 15MT/day proposed plant at Chandrapur is estimated to cost Rs 2,300,000 and the 22MT/day plant at Godhra Rs 4,200,000 Both estimates exclude building costs The $228,000 set aside for processing plants in the ICDS financial plan is $319,000 no short of the amount required

Other conclusions are that hygienic practices in the food plants visited were generally not adequate and need to be improved, little systematic study has been done to assure the acceptability of food supplements currently need in the ICDS Program, and current vitamin and mineral fortification of ICDS food supplements is less extensive than would be desirable The Protein Foods and Nutrition Development Association of India represents individuals and firms with substantial expertise in food processing that it would be desirable to utilize in the ICDS program Based on discussions with several engineering firms, the capability exists in India to manufacture extruders if the patent licensing situation can be resolved and a market assured

RECOMMENDATIONS

The following recommendations are made An extrusion plant is proposed for the Godhra site and a roasting/grinding/mixing plant for the Chandrapur site Decisions need to be made promptly on what clientele groups are to be served by each plant and what products are to be manufactured Specific design criteria should be developed for these plants The actual design accepted for each location should be based on evaluation of competitive bids made against specific design criteria Comparable data should be obtained from both plants on capital costs, operating costs, product quality and acceptability Shortcomings in the Chandrapur and Godhra plant sites need to be overcome before plants are authorized Additional funds in the amount of $319,000 need to be added to the budget for food processing plants in the ICDS financial plan

ICDS FOOD PROCESSING PLANT FEASIBILITY STUDY

JUDSON M. HARPER AND G. RICHARD JANSEN[1]

TABLE OF CONTENTS

1 0 Objectives

2 0 Approach to Assigned Work

3 0 RTE and Weaning Food Plants in India
- 3 1 General Considerations
- 3 2 Balahar
- 3 3 SEV
- 3 4 Balamul
- 3 5 Sukhada
- 3 6 Panjeeri
- 3 7 Repron Weaning Food
- 3 8 Energy Food

4 0 Food Supplement Needs for ICDS Program
- 4 1 Acceptability
- 4 2 Food Safety
- 4 3 Nutritional Value
- 4 4 Flexibility in Product Characteristics
- 4 5 Ingredients (Title II and Indigenous)
- 4 6 Shelf Life
- 4 7 Product Specifications and Quality Control

5 0 Processing Systems
- 5 1 Systems Study
- 5 2 Comparison of Processing Systems
- 5 3 Cost Comparisons
- 5 4 Discussion
- 5 5 Proposed Processing Sites
- 5 6 Equipment Expenditures

6 0 Conclusions

7 0 Recommendations

8 0 References

Appendices

A Itinerary for Plant Visits

B Names of Individuals Contacted

C Detailed Cost Analysis

1 The authors are respectively Vice President for Research (JMH) and Professor and Head, Food Science and Human Nutrition Department (GRJ), Colorado State University, Fort Collins, Colorado

1.0 Objectives

The objectives of this study are to provide the Ministry of Social and Women's Welfare (MOSWW), Government of India (GOI) and the United States Agency for International Development (USAID) with a) a feasibility study of alternative approaches to the design of Ready-to-Eat (RTE) supplementary food processing plants to serve anganwadis in the USAID/ICDS (Integrated Child Development Services) Assisted districts, Panch Mahals in Gujarat, and Chandrapur in Maharashtra, and (b) recommendations on the design and equipment for the food processing plants and the food products that can best meet the ICDS Project needs

To meet the objectives of the assignment the following specific tasks assigned by USAID were completed

1 The past history of ready to eat (RTE) and weaning food products in India including Balahar, SEV, Balamul, Sukhada, Panjeeri, Energy Food, and Matruahar has been reviewed

2 The food supplement needs in ICDS including ingredients, acceptability, safety, nutritional value, flexibility in product characteristics, shelf life, and quality control have been reviewed

3 A whole array of types of weaning and RTE food processing plants currently functioning in India were visited

4 Based on the above considerations the advantages and disadvantages of each type of processing system have been discussed and appropriate conclusions drawn

5 Taking into account such factors as cost, acceptability, safety and nutritional quality of the products, raw materials used, plant design and installation time, maintenance, availability of local equipment and other factors recommendations are made in this report as to which type(s) of processing system will best meet the needs of the ICDS under specified conditions

2.0 APPROACH TO WORK ASSIGNMENT

The assigned work was completed in three phases : (1) pre in-country reading, (2) plant and other visitations in India; and (3) data analysis and report writing.

2 1 Pre In-Country Reading Assignments

A number of documents supplied by USAID were read prior to the visit to India These included the USAID Project Paper on the ICDS, the proceedings of a workshop on weaning foods held at the College of Home Science, Andhra Pradesh, Agricultural University in Hyderabad July 1-2, 1983, and specific preliminary information on the various proposals for weaning and RTE food processing plants based on either extrusion or roasting/grinding/mixing technology and to be implemented in either Gujarat or Maharashtra State

2 2 Plant and Other Visitations in India

The visit to India commenced with a briefing at USAID conducted by Ms Mary Ann Anderson, Nutrition Advisor Also present were other USAID personnel and CARE personnel Meetings were then held with Ms Connie Johnson, Mr Menon and Dr Sam Dalal at UNICEF, and with Mr M S Dayal, Mr Qureshi, and Mr K L Gupta, Secretary, Deputy Secretary, and Under Secretary respectively at the MOSWW

Following these briefings an intensive eight day trip to visit food processing plants in India was undertaken The detailed itinerary for this trip is shown in Appendix A Facilities in four states were visited Briefly these included, but were not limited to the Godhra site for a proposed weaning food plant, the AMUL RTE and Weaning Food Plant at Anand, the Sukhada processing plant at Thane, the MARKFED godown for a proposed plant in Chandrapur, the REPRON food plant in Hyderabad, the Central Food Technological Research Institute

(CFTRI) and an Energy Food plant in Mysore run by the Karnataka State Agro Corn Products Ltd. Discussions were also held with representatives of the Department of Health and Family Welfare, Gujarat State, Gujarat Agro Industries Corporation, National Dairy Development Board, Anand, Protein Foods and Nutrition Development Association, UNICHEM Laboratories, Patel Brothers Services and Engineering, and Mixi-Therm Engineers. Visits were made to several Anganwadis in Chandrapur and Mysore On return to New Delhi a visit was made to the Gurgaon Panjeeri plant and a briefing was held with Mr Douglas Atwood and his staff at the headquarters of CARE-India

The names of all individuals contacted on the work assignment are provided in Appendix B

2 3 Data Analysis and Report Writing

This phase was completed in New Delhi All information and data obtained in the consultancy were analyzed and appropriate conclusions and recommendations were made based on this data analysis

3 ' RTE AND WEANING FOOD PRODUCTS IN INDIA

3 1 General Considerations

We have discussed elsewhere (1) the important role centrally processed supplementary food might play, together with breastfeeding, in improving maternal and infant health in less developed countries (LDCs) The potential advantages of centrally processed supplementary foods in improving maternal and child health specifically in India are discussed in the AID Project Paper for the ICDS program (2), and the proceedings of the workshop on weaning foods held at the College of Home Science, Andhra Pradesh Agricultural

University, Hyderabad (3). The limitations of supplementary feeding have been discussed by Beaton and Ghassemi (4), and Orr (5).

India has had a long and intensive experience with supplementary feeding and CFTRI has been a world leader in the development of food supplements based on blends of cereals and pulses This review is not intended to be a comprehensive review of this vast effort An excellent summary of supplementary foods for combating child malnutrition in India up to 1977 may be found in a review by UNICEF (6) This report will consider centrally processed RTE and weaning foods in use in India since 1977 with major emphasis on the products produced at the plant sites visited

3 2 Balahar

Balahar (children's food) was developed in the mid 1960's The concept was to extend the use of Title II commodities such as Corn Soya Milk (CSM) or Soy Fortified Bulgur Wheat (SFBW) with locally milled cereals, pulses and oilseed cakes In keeping with the general philosophy at the time the protein level of Balahar was high (21/) and little attention was paid to either fat content or calorie density of these products

According to discussions with CARE personnel, production of Balahar essentially ceased by 1981 A number of factors appear to have contributed to the termination of Balahar production The input of locally milled cereals, pulses and oilseeds was disappointingly low The raw nature of the blends led to poor shelf life, a requirement that they be cooked necessitating cooking equipment and fuel, and a low calorie density of cooked gruels prepared from Balahar Specific information was not obtained during this consultancy on the acceptability of these products or the actual use level by any age group The Balahar experience is briefly included

in this report primarily because it suggests the potential advantages which centrally processed pre-cooked supplementary foods, whether processed by roasting/grinding/mixing, or extrusion technology, might have for the ICDS Program.

3 3 SEV

SEV was a RTE snack type food prepared in the CARE REPRON food plant in Hyderabad, via forming extrusion of noodles made from CSM and water followed by deep fat frying The process has been terminated and little information was obtained about this product The process lead to a higher than desirable level of fat in the product with resultant problems of cost and shelf life In addition SEV was used in school feeding The priority for the ICDS program currently is children 6 months to 6 years, especially those 6 months to 3 years and pregnant and lactating women SEV is not a suitable food for the 6 months to 3 years age group

3 4 Balamul

Balamul represents a variety of formulations of RTE and weaning foods produced by the AMUL Cooperative in Anand, Gujarat Ingredients include milk, cereals, and legumes, and the products are fortified with vitamins and minerals

Two types of weaning foods are made One is called Balamul, cereal with milk This product made from cereals, legumes and milk, and fortified with vitamins and minerals is marketed commercially in tins It supplies 20g protein, 3 5g fat and 380 kilocalories per 100 grams A low cost version of this product is made available for government institutional weaning foods under the name Balamul, Special Weaning Food This product apparently is similar to the commercial product, although it contains somewhat less protein (16g/100g)

12

both these weaning foods are made by a relatively expensive roller drum drying process Full fat soy flour is first produced using a Wenger look alike extruder made by AMUL from a Wenger X-25 prototype The full fat soy flour and wheat flour are cooked in pressure cookers and then roller drum dried The dried product is ground to a fine flour on a pin mill and then blended with non-fat dry milk, vitamins and minerals to produce a precooked instant cereal comparable to imported products such as Cerelac

In addition to the weaning foods, RTE snack foods with a variety of shapes, sizes, textures, colors and tastes are made from extruded blends of cereals and legumes fortified with vitamins and minerals Unfortunately because of a labor dispute, the AMUL plant was not operating, and so it was not possible to see the actual production of Balamul Information on the specific formulations used in making Balamul was requested but not received prior to writing this report

5 Sukhada

Sukhada is a sweetened cereal legume blend made from 60 parts SFEW (CARE Title II), 10% soybean oil (CARE Title II), and 30 parts jaggery (local input) The product is being produced in a plant in Thane run by the Maharashtra State Marketing Federation (Marketfed) and distributed to anganwadis throughout Maharashtra The production target for Sukhada is estimated by CARE at 1,500 MT/month Production appears to be in the neighborhood of 50 MT/day

The process used to produce Sukhada is highly labor intensive with 27 workers employed at the plant over 3 shifts The plant utilizes 48 open concave pan ovens over a flame and 48 sieves for breaking up the lumps in the final product resulting from the use of jaggery SFEW is first ground to 20-60 mesh in a roller grinder The jaggery is heated in the

oil in one pan while the ground SFBW is heated in an adjacent pan. This step was timed at less than 2 minutes. The oil-haldi mixture is then added to the heated bulgur and mixed vigorously with paddles for less than a minute. The blend is then weighed and sieved by hand to break up lumps. The sieved product is then bagged in 20 kg bags by hand.

It is not possible using this process to adequately precook the bulgur, because of the short contact time and the inefficient method of heat transfer. The sieving is done by workers by hand without gloves or hairnets. Product from the floor was observed to get back into the final product. The lavatory facilities provide insufficient toilets and sinks and no soap or towels for hand washing. In summary, Sukhada as produced at the Thane plant cannot be considered a precooked product. Because of the large number of manual steps involved and the generally poor sanitary practices at the plant, it is highly likely that the product contains a high level of microbial contamination. However, no data were obtained on this latter point since no microbiological tests are routinely performed on the product.

2. Panjeeri

Panjeeri is also a sweet cereal/legume blend similar in composition to Sukhada. We observed Panjeeri as made in a roaster/grinder/mixer plant at Gurgaon that was designed by Multi-Therm Engineers. The process is quite different from the process described above used to make Sukhada.

Three formulations of Panjeeri are being made in the Gurgaon plant. Two of these are made from CARE commodities, or commodities supplied by the World Food Program. The third formulation is based totally on indigenous cereals and legumes. The CARE and WFP formulations are 72% soy fortified bulgur, 20% sugar, and 8% soybean oil or 65 CSM, 25 sugar and

10% oil. The formulation for indigenous ingredients is 45% wheat flour, 20% gram flour, 25% sugar and 10% groundnut oil. No vitamins and minerals are added to any of the formulations. The final product is examined for quality by visual inspection only. Production is in the order of 100MT/mo.

Ingredients include CSM, SFBW, soyabean oil, and locally purchased wheat flour, gram flour and groundnut oil. The SFBW is preground in a chucky stone mill.

In the process the CSM, SFBW or mixture of wheat and gram flour is hand loaded into a roaster heated to approximately 210° C by thermal fluid heated by an oil heated boiler system. After roasting 30 minutes for CSM, or 60 minutes for local wheat and gram flour, the mixture is dumped into a blender and mixed for 5-10 minutes with sugar and oil. It is then dumped into trays for cooling. It is then loaded into 20 kg bags by hand. Completeteness of roasting is apparently determined by a taste test by the operator. The quality of the final product is monitored by visual inspection.

PEPSON Weaning Food

A precooked weaning food is being produced in an extrusion plant based on a Wenger X-175 extruder. All the equipment in the plant was imported and donated by UNICEF. The building was donated by CAFE.

The process is highly automated using totally indigenous wheat and soyabeans. The whole wheat is ground using a vertical mill with the hulls removed by aspiration. The ground endosperm is mixed with previously extruded full fat soy flour and extruded on a Wenger X-175 extruder. Following cooling, the extrudate is ground on a pin mill and blended with

vitamins and minerals, sugar and nonfat dry milk. The final product is placed in 20 kg polypropylene lined bags using an automatic filler and scale.

The formulation of this weaning food is 650 kg wheat, 200 kg soyabeans, 170 kg sugar, and 50 kg nonfat dry milk. Vitamin A, thiamin, riboflavin, niacin and ferrous sulfate (each at 20-25% RDA/serving) are also added. This weaning food is judged to be highly satisfactory for feeding infants 6 months to 2 years of age.

A RTE snack food is also produced in the plant. The formulation for the snack food is 650 g wheat flour, 10 g Bengalgram, and 100 g defatted soy flour. Following extrusion, rather than being ground in a pinmill, the extrudate is enrobed with 5% spices and 5% oil.

Monthly production at the FERRCN Food Plant is estimated to be 500 MT RTE snack food and 150 MT weaning food. Some experimental work has also been done at the plant to press the weaning food into small tablets (5g) and with plans to sell them in the commercial market in 25% tins (net weight). The goal would be to undersell by Rs. 5 a current commercial product called Threptin being marketed by Raptakas Brett and Co. Ltd. at Rs. 71.275 tin (net weight).

7.8 Energy Food

Energy Food is the generic name given to cereal/legume blends precooked by roasting/grinding/mixing technology and developed at the Central Food Technological Research Institute (CFTRI) in Mysore. Four such plants are being operated in Karnataka by the Karnataka State Agro Corn Products Ltd., with an additional plant being developed. The name "Energy Food" undoubtedly reflects the de-emphasis on protein and increased emphasis on calories that developed in the 1970s, especially at the National Institute of Nutrition (NIN) in Hyderabad

The ingredients used in these plants vary somewhat but are all indigenous to India. The cereal component is either wheat, maize or rice, and this is blended with gram flour, and groundnut cake or soybean cake. Selected vitamins and minerals are added. A typical formulation is described by CFTRI as 60 parts wheat, 10 parts Bengalgram, 10 parts edible groundnut flour, and 30 parts jaggery. More recently soybean cake is replacing groundnut cake in most formulations. Vitamins and minerals are added. The compositon of Energy Food stated by CFTRI is as follows (per 100g): protein 16.7g, fat 6.7g, minerals 2.1g, crude fibre 1.8g, carbohydrate 66.7g, energy 394 cal., calcium 1.8g, phosphorous 0.8g, iron 6.0mg, vitamin A 1500 I.U., thiamin 0.6mg, riboflavin 0.8g, niacin 6.0mg, vitamin B12 0.4ug, and folic acid 0.001 mg. From the materials provided to us on the process and ingredients used, it is not clear where the 6.7% fat in the final product comes from.

The process is a fairly complicated one involving the separate roasting and grinding of each of the cereal, pulse and legume components. Roasting of cleaned and destoned cereals or pulse is carried out until a desired color and aroma develops. The jaggery is broken into small bits, mixed with calcium carbonate and some wheat flour and passed through multimill to get a coarse flour. All ingredients are blended together. The capacity of the Energy Food Plants in Karnataka supported by UNICEF is estimated at 10 MT per 12 shifts each.

4 FOOD SUPPLEMENT NEEDS FOR ICDS PROGRAM

The attributes of the food supplements needed in the ICDS Program will be discussed under the headings of acceptability, safety, nutritional value, flexibility in product characteristics and shelf life. Possible ingredients that might be used to meet these requirements are considered. Finally, final product specifications are suggested along with quality control procedures needed to meet these specifications.

4.1 Acceptability

It is obvious that food supplements must be acceptable to the target group. Food that is not consumed has zero nutritional value. Although lip-service is often paid to this important consideration, it is disappointing how little real effort is made to insure product acceptability. On our visit to all the food processing plants described in section 3.1 we were unable to obtain any systematically collected data dealing with product acceptability nor do any procedures appear to be in place to obtain such information.

Product acceptability is likely to vary with target group. Without definitive data it is difficult for us to establish parameters of acceptability. These must be determined systematically in the Indian context. A few general comments may be made, however.

For 6 months to 2 year old infants, a cereal gruel would appear to be the most satisfactory way to provide the supplement. A precooked product of fine enough grind has the advantage over an uncooked or partially cooked product in that it will gelatinize by mixing with warm (previously boiled water, require no cooking facilities and produce a gruel of increased calorie density (i.e. more calories per 100 ml of gruel). An extruded product is very capable of meeting this requirement, whereas a roasted product is much less able to breakdown the starch structure to this extent. Therefore, as discussed further in section 5.1 and in view of the importance placed on this age group in the ICDS Program, the choice of processing systems will depend on the acceptability of roasted and ground vs extruded precooked supplements as reliably determined for this age group, and the importance placed on producing a product suitable for this age group.

For older preschool children (2-6 years) feeding the supplements as moistened round balls, or as RTE snack foods

becomes more possible The importance of variety in product characteristics (i e shape, taste, texture, aroma) becomes more important in order to relieve monotony Such variety also is of obvious importance in supplements provided to pregnant or lactating women In these cases, if the supplement is taken home, a flour could be used since mothers can easily incorporate a composite flour into local recipes For mothers and mothers to be, considerable attention needs to be paid to local tastes and customs One also needs to be concerned with the use of the supplement as food for the entire family

It cannot be emphasized too much that the acceptability of food supplements to be used in the ICDS Program needs to be ascertained in the target population by systematic investigation, and not from anecdotal and random comments

4 2 Food Safety

Any food intended for human use should be produced under hygienic conditions This is particularly and crucially true for foods intended for infants and young children (i e the priority groups in the ICDS Program Good manufacturing practice for human food will include, but not be limited to the following considerations

The food plant should have windows and doors screened Ideal construction of the building should minimize if not totally prevent the entry of insects Waste materials should be removed from the plant site and properly disposed of

Plant workers coming into close contact with food products, as in many of the labor intensive food plants in India, should wear clean gloves, hats, shoes, and aprons Rags used in cleaning equipment should be clean Product or ingredients coming into contact with the floor should be discarded Workers should be subjected to periodic health inspections

Adequate toilet facilities should be provided for workers of both sexes. These facilities should include soap, water, and clean towels.

Incoming ingredients should be inspected and found to be free of insect infestation and rancid, bitter, musty, sour and other undesirable or foreign tastes and odors. Attention should be given to proper plant fumigation procedures as needed to prevent or minimize insect infestation. Floors should be kept clean of dirt, including ingredients, products and trash in general.

An individual with knowledge and experience in food sanitation should be assigned by management the responsibility of making sure that the above practices are followed by frequent and unannounced inspections. Tests for microbial contamination on the final product should also be carried out routinely.

4. Nutritional Issues

The CCT has established the following requirements for food supplements to be used in the ICDS Program (2.7) for 6 months to 6 year old children 700 kcal and 16g protein day, for severely malnourished children (grades III and IV) 800 kcal and 20g protein day, pregnant and nursing women 500 kcal and 20g protein/day. These are minimal requirements. In our opinion, as discussed below, food supplements used in the ICDS should be fortified with a broad spectrum of vitamins and minerals.

The nutritional specifications for a food supplement will vary with the intended use. When weaning foods are used as supplements to breast milk, the unsupplemented diet of the child, i.e. breast milk, is of high nutritional value, and well digestible. Therefore the complementary food needs only to be nutritionally balanced and does not need to make up

nutritional deficiencies In contrast when the supplementary food is being used to supplement the 'family pot' diet being consumed by either 1-6 year old children or pregnant or nursing mothers, a higher nutritional value of the supplement is needed The reason is that the home diet in India among the target populations in the ICDS Program is typically very high in cereals and low in pulses and animal food Therefore it is not well digested, and is deficient in protein, vitamins and minerals Since the food supplements proposed for ICDS need to meet all these requirements, including the height enea nutritional requirements of a severely malnourished child, the nutritional specifications should reflect these needs, and not merely the need for a complementary food fed to a fully breast fed and not malnourished infant

4.1 Energy and Fat

As discussed above, the calorie levels for food supplements in the ICDS Program are established by the GOI It is desirable that the specified level of calories be supplied in the smallest weight or volume of food possible, i e in an energy dense form Since fat supplies more than twice the food energy per unit weight as either protein or carbohydrate, fat should be present in the weaning food at least at a 4 level and preferably at a level of 6-8% This will not only increase the calorie density of the product, but also will supply ample quantities of essential fatty acids as long as vegetable oils, not including cocoa or palm oil are used

When the weaning food is to be served as a gruel or porridge, the number of calories per unit volume of the gruel becomes important Both sugar and nonfat dry milk increase the calorie density

of gruels, since they do not increase the viscosity of the gruel during preparation Extrusion under low moisture and high shear conditions also increases the calorie density of cereal based gruels as does post extrusion treatment with an amylolytic enzyme (1)

4 - 2 Protein

The ICDS minimum for protein of 100/300 kcal means that 17% of the calories in the food supplement should be supplied by protein For comparison CSM or ICSM each supply 20% of calories in the form of protein Since these products are commonly consumed with sugar, the actual protein level as consumed may not be greatly higher than specified by the GCI for the ICDS Program

Nevertheless, the importance of protein quality in improving growth or lactation, even if food energy is not supplied in fully adequate amounts should not be underestimated (8, 9) The protein level specified for the ICDS Program is a minimum that should be fully met

The GCI standard for protein does not speak to the issue of quality At the level of protein specified, protein quality of the level of casein is desirable (i e a protein efficiency ratio of 2 1 - 2 5 compared to casein at 2 5 A rule of thumb for making sure that this occurs is that half of the protein in the mixture should be supplied by the cereal component, and half by the pulses and/or oilseed component

4 - 3 Fibre

The maximum allowable level for crude fibre in PL 480 Title II blended foods ranges from 2 0 - 2 5% (10). Based on a review of digestibility studies on a variety of cereal/pulse blended foods carried out in infants and preschool children (10), and in consideration of ingredients available in India a maximum allowable crude fibre level of 2 5% is recommended. A general recommendation is to dehull the pulse or oilseed component. Use of whole, and adequately cleaned and destoned wheat, rice, and corn is acceptable, but sorghum and millets should be dehulled to remove tannins that reduce protein digestibility.

4 3 4 Vitamins and Minerals

Centrally processed blended foods lend themselves readily to fortification with vitamins and minerals in a cost-effective way. At present, the fortification strategy being used for the processed foods reviewed in section 3 0 above is very limited. No vitamins and minerals are being added to Sukhadi or Panjeeri. Vitamin A, thiamin, riboflavin, niacin and iron are added to the REFRESH weaning food. In the case of energy food, for information supplied on the composition of the finalproduct, more complete profiles of vitamins and minerals are added including calcium, iron, vitamin A, thiamin, riboflavin, niacin, vitamin B_{12}, and folic acid.

We believe that the fortification strategy being followed for energy food is the correct one except that we recommend fortification also with

zinc, iodine, pyridoxine, pantothenic acid, vitamin D, alpha-tocopherol and ascorbic acid The amounts of vitamins and minerals recommended are listed in Table 1

The diets of the target populations of the ICDS are known to be very heavily cereal based The availability of pulses, never high for these groups, is believed to have declined in recent years Although it is not possible for us to estimate the nutrient composition of the typical diets consumed by ICDS participants it is highly likely that they are deficient in many vitamins and minerals A centrally processed blended food is a cost-effective way to deliver vitamins and minerals to a target population We have estimated the cost of the fortification mix shown in Table 1 at $400/MT or 48 paise/kg (1

The fortification specifications listed in Table 1 are, in the main, the same as those for blended foods (i e CSM ICSM, WSB) in the Title II program There are several recommended changes however The required level of ascorbic acid has been doubled to improve the absorption of iron (11) The ascorbic acid should be coated to improve storage and cooking stability It is also recommended that the vitamin B_{12} level be reduced by 5 The current Title II specification of 4 mg/MT supplies 1 mg/200 kcal supplement The WHO FAO requirements for 1-3 year old and 4-6 year old children are 0 5 ug/d and 1/5 ug/d respectively Based on recent work in which vitamin A fortification has been shown to reduce child mortality, consideration should be given to even a higher level of vitamin A than specified in Table 1

The USDA specifies 20 kg/MT of tricalcium phosphate in blended foods as a source of calcium and available phosphorous. The high level of tricalcium phosphate, which is beyond nutritional requirements, is recommended to inhibit insect larvae growth during transportation and storage. An alternate formulation of dibasic calcium phosphate and calcium carborate is recommended for local manufacture of these blended foods, as long as good manufacturing and storage practices are adhered to. If nonfat dry milk is added to the formulation it would be possible to drop the dibasic calcium phosphate and add only ground limestone as a calcium source.

4.4 Flexibility for Product Characteristics

As discussed in section 4.1, different segments of the target population have different requirements, in terms of product form, taste, texture, etc. It is desirable that the processing system(s) selected have the capacity for making blend instant ready to eat products suitable for making gruels, beverage shaped RTE snack or finger foods with a variety of tastes and textures suitable for use by older children, pregnant or nursing women, or a composite flour suitable for pregnant or nursing women to incorporate into home recipes.

4.5 Shelf Life

The shelf life of a product depends on the composition of the product, how it is processed, how it is packaged, and how it is stored. The food supplements required for the ICDS Program should have a shelf life of at least 6 weeks and preferably 3 months under typical storage conditions in India.

4.6 Ingredients (Title II and Indigenous)

Title II currently supplies a large share of the ingredients going into the ICDS Program. The goal is eventually to switch totally to local manufacture of the food supplements from indigenously grown food crops using equipment manufactured in India. This would appear to be an attainable goal.

Table 2 lists potential ingredients for the ICDS food supplements of either Title II or indigenous origin. Clearly a considerable number of formulations may be made from these ingredients that meet the specifications listed in Table 1. The exact formulations used will depend on cost and availability of ingredients, financial resources, local taste and texture preferences and other factors. Any formulations that meet the specifications listed in Table 1 and are shown to be acceptable would be satisfactory from a nutritional point of view.

4.7 Product Specifications and Quality Control

Generalized product specifications are listed in Table 1. Undoubtedly no single set of specifications will be appropriate in all circumstances, but these are presented as a good starting reference point, based on considerable experience with blended foods used in the Title II program.

In addition to those specifications listed in Table 1, attention needs to be paid to particle size distribution, especially for products intended to be used as ladoos or precooked cereal gruels. For this use, extruded blends should be 40-80 mesh and roasted blends 60-100 mesh (U.S.). The roasting procedure produces a less soluble product, and thus requires finer grinding. Even with finer grinding the roasted product will not make a satisfactory precooked gruel. It will however make ladoos satisfactorily.

TABLE I

PROPOSED SPECIFICATIONS FOR FOOD SUPPLEMENTS

Percentage Analysis	Minimum	Maximum
Moisture %		10
Protein (N x 6.25)	17 %	
Fat %	6.0	
Crude Fiber		2.5
Total Bacteria per/g [1]		50,000
Nitrate in ppm		20
Bulk Density (g/cc)		0.55

Mineral Premix	mg/MT
Monobasic Dibasic Calcium Phosphate	6.0
Calcium Carbonate or Ground Limestone	6.0
Zinc Sulfate Hydrated	0.04
Ferrous Fumarate or Sulfate	0.46
Iodized Salt (17/12	0.5
TOTAL	19.0

Vitamin Antioxidant Premix	Amounts/MT
Thiamin Mononitrate	2.8 g
Riboflavin	3.8 g
Pyridoxine Hydrochloride	1.6 g
Niacin	50.0 g
Calcium D-Pantothenate	28.0 g
Folacin	2 g
Vitamin B12	2.0 mg
Vitamin A Palmitate	16.5 x 10⁶ I.U.
Vitamin D Palmitate	2.0 x 10⁶ I.U.
Alpha-Tocopheryl Acetate	75,000 I.U.
Butylated Hydroxyanisole	20.0 g
Butylated Hydroxytoluene	22.0 g
Ascorbic Acid	8.0 g
Soy Flour or Starch q.s.	1.5 kg
TOTAL	1.5 kg

1. The moisture level of a RTE finger or snack food should be less than 4%.

2. Approximately half of the protein should be supplied by the oilseed and or pulse components. Protein efficiency ratio should be 2.0 - 2.5 (casein 2.5).

3. Tests for Enterobacteriaceae Salmonella E. Coli and Coagulase positive Staphylococci should be negative.

TABLE 2

POTENTIAL INGREDIENTS FOR ICDS FOOD SUPPLEMENTS

Table 1	Indigenous
Soy fortified bulgur	Wheat
Soy fortified cornmeal	Maize
Soy fortified sorghum grits	Sorghum
Soy fortified wheat flour	Millet
Peanut oil	Rice
Soybean oil	Various pulses/beans
Nonfat dry milk	groundnut cake
Whole wheat	soybean cake
Whole corn	Soybean flour defatted
Whole rice	soybeans
Bulgur	groundnut oil
	sugar
	jaggery
	vitamin premix
	mineral premix

Quality control procedures need to be set up to monitor compliance with the specifications listed in Table 1. The chemical and physical tests used should be standardized methods such as those of the Official Methods of the Association of Official Analytical Chemists (AOAC), the American Association of Cereal Chemists (AACC) or the American Oil Chemists Society (AOCS). The microbiological methods are described in: (1) Berge's Manual of Determinative Bacteriology, 8th Edition, Williams and Wilkins, Baltimore 1974, (2) Manual of Clinical Microbiology, 2nd Edition, American Society of Microbiology 1974, or (3) Biochemical Tests to Identify Medical Bacteria, Wilkins and Wilkins, Baltimore 1976.

The degree of sampling needed to ensure compliance will depend on the quality and consistency of the manufacturing practices. At a minimum, sampling should occur twice a shift. The sampling should be carried out randomly and unannounced. Final product needs to be labelled with date and batch number or in the case of a continuous process with date and shift. If specifications are not met, improvements need to be made and sampling needs to be carried out more often until specifications are re-established.

5 PROCESSING SYSTEMS

5.1 Systems Study

Two types of basic processing systems were studied in detail. These were the roasting/grinding/mixing type and the low cost extrusion type. Both systems process a variety of cereal and legume grains to manufacture ready-to-eat (RTE) food products for weaning foods and supplemental foods.

5 1 Energy Food

The roasting/grinding mixing systems examined had two basic configurations. Figure 1 illustrates the system which was developed by CFTRI and being proposed by PEPROK. The resulting product is called Energy Food and consists of mixtures of separately roasted cereal (wheat), peanut cake and gram flour. The roaster for the wheat is of the sand roaster type where the wheat is mixed with heated sand which increases heat transfer rate and uniformity. The problem with these roasters is the difficulty in removing all the sand from the product and their poor thermal efficiency due to the heat being applied to only the outside of the drum. All three roasted components are then blended in proper proportions (6 1 1) along with jaggery (2 2) and vitamin/mineral mixture to form the final product. The process is essentially batch oriented and requires considerable manual labor input.

5 1 2 Panjeeri Sukhada

Figure 2 illustrates the Panjeeri or Sukhada process and represents another roasting/grinding mixing technology. The process studied is the proposal made by M/s-Therm Engineers which is an automated version of the hand roasting process. The roaster can only handle powdered inputs which means ingredients can only be in the more expensive flour form.

To allow the system to handle whole grains, grain cleaning and grinding equipment would have to be supplied as a preprocessing step.

FIGURE 1

ROASTING GRINDING/MIXING
ENERG FOOD - RTE WEANING FOOD

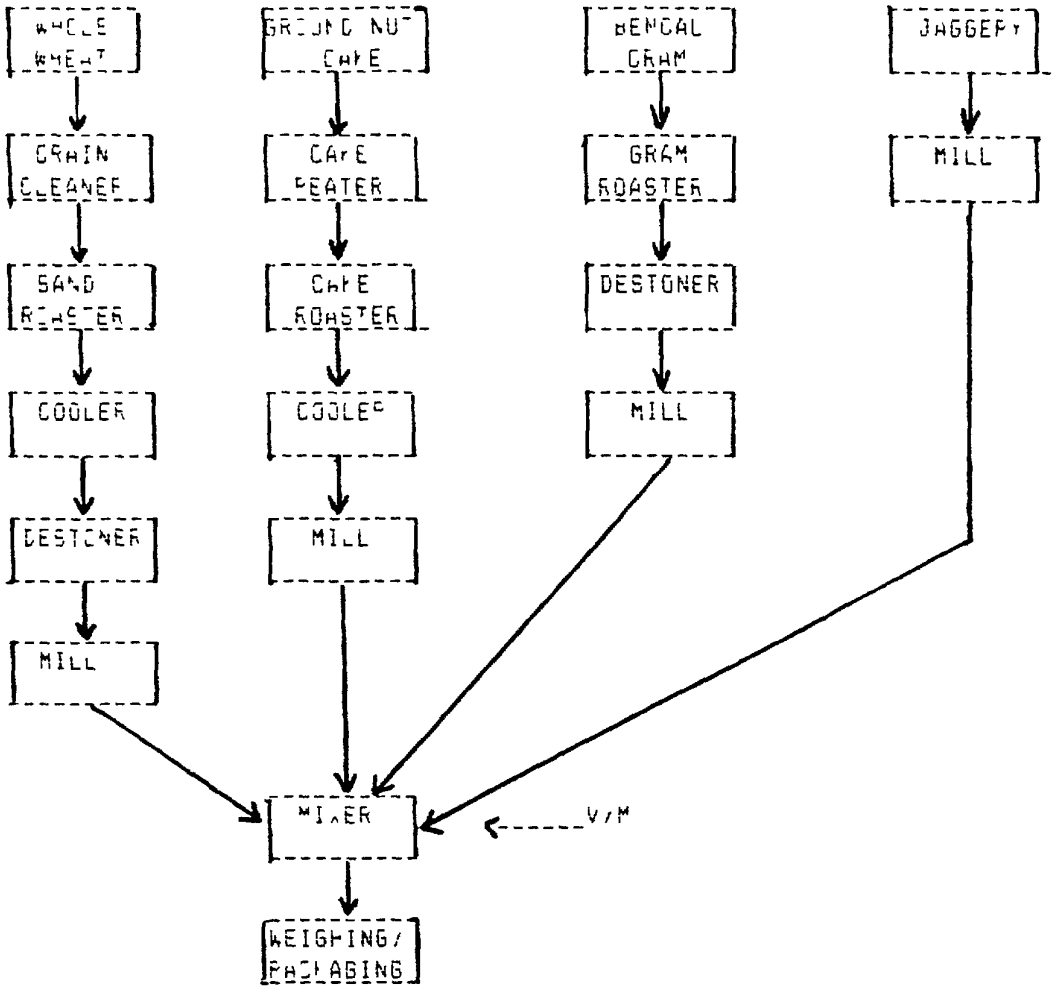

CAPACITY 4 MT/SHIFT

FIGURE 2

PANJEERI OF SUPRADI - RTE WEANING FOOD MIXI-THERM ENGINEERS

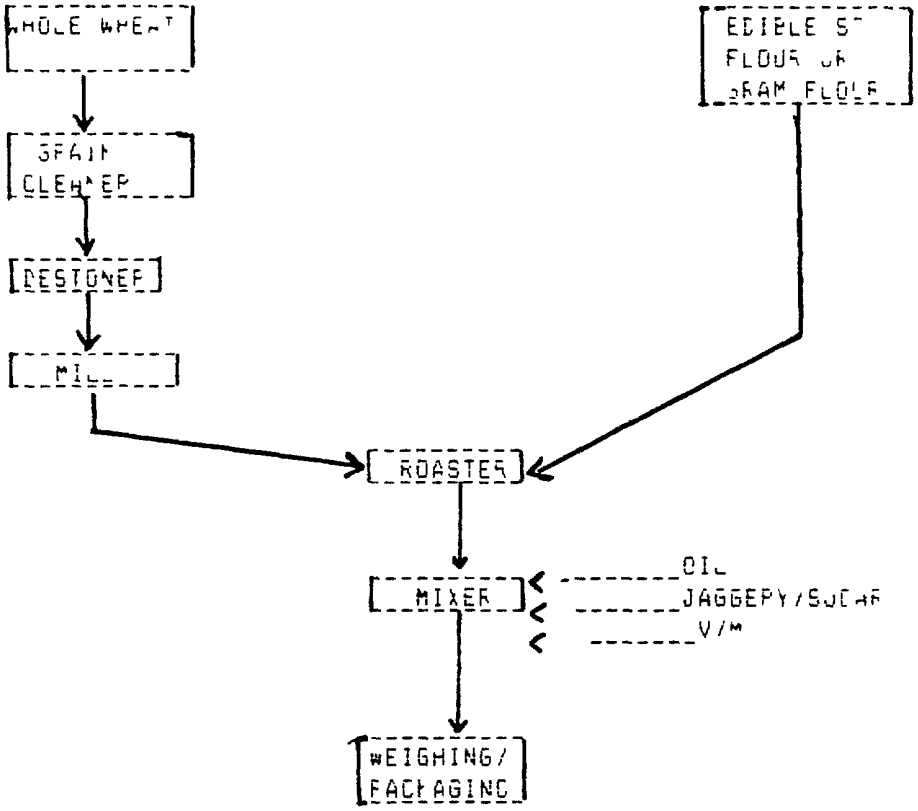

CAPACITY 8MT SHIFT

FIGURE 3

EXTRUSION (LEC) PROCESSING - RTE WEANING FOOD
- EXPANDED NUTRITIOUS FOOD

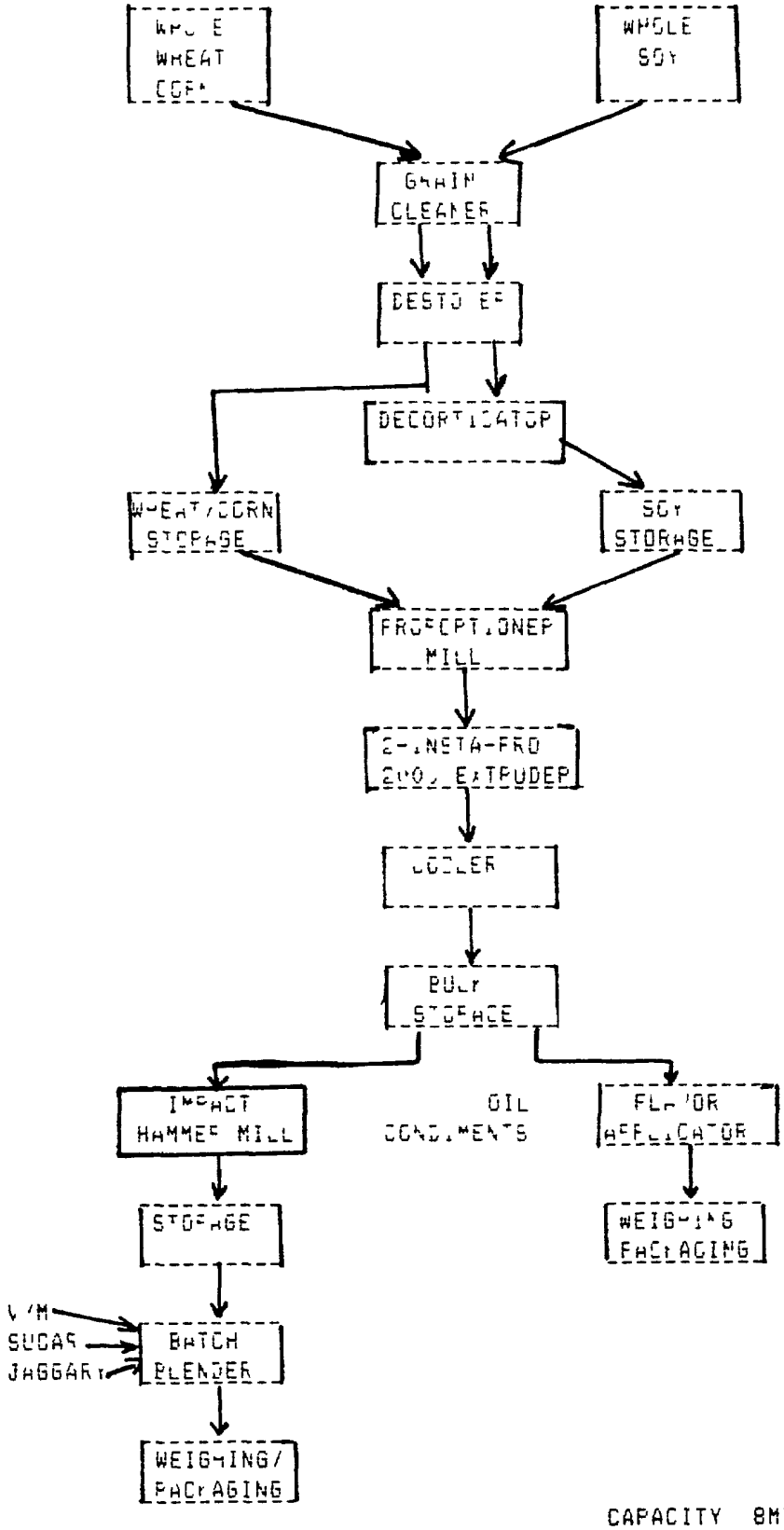

Heating of the roaster and mixer is done with high therm oil which is first heated in a boiler and circulated through the jackets in the equipment The equipment is very rugged and of continuous duty capability Following roasting of wheat and gram flour (45 20) in the jacketed roaster with an internal ribbon mixer for agitation for approximately 5 minutes and a temperature of 210°C, the batch is dumped into a sigma blade mixer containing oil and sugar (10 25) and blended until uniform This mixture is dumped in a cooling trays and stirred by hand until cool and capable of being packaged

5 1 LEC (Low-Cost Extrusion Cooker)

The Panch District Cooperative Milk Producers Union Ltd is proposing a LEC based process to produce RTE foods at a Godhra site The block diagram of the process is shown in Figure 3 Raw cereal grains in the form of grits are mixed with soybeans (85 15) and extruded in an Insta-Pro model 2C extruder at about 150°C to accomplish complete cooking Following extrusion, cooling is accomplished by contacting the product with air and the cooled product ground in a hammer mill To complete the product, the ground extruded material is mixed with sugar and vitamin/mineral premix in a blender

5 2 Comparison of Processing Systems

All three alternative RTE food processing systems are potentially suitable to manufacture products for the ICDS Program in India Each processes raw ingredients under low moisture conditions so as to minimize processing costs associated with extensive moisture removal Since the

p oducts are always kep dry, there is little chance of spoilage during processing and reduced chances for product contamination

E en though the three sys ems meet the overall criteria o the FTE Food processes, it is desirable to discriminate among the op ions based on the careful examination of unique systems characteristics This comparison is done in Table 2 Each fea ure is rated on the basis of 10 to 1 with 10 being the highest rating In addition, a discussion is given to just y the rating

5 2 1 Engineering Features

Currently the roasting grinding mi ing systems utilize equipment which is indigenous to India To put the extrusion system into operation the extruder and possibly some of the grain pretreatment equipment would ha e to be imported This could be done on an initial basis to allow time for Indian manufacturers to obtain licenses and manufacture all the equipment in India wi h s equipment is relatively simple and it appears Indian manufacturing capabilities are sufficient should the interest and mar et e ist for equipment manufacture

All systems are maintainable in the conte t of the Indian operating environment In all mixing/grinding processes, machine components need to be rebuilt or replaced periodically The extrusion system probably has the highest maintenance costs but they are well within reason and the capabilities found in India

TABLE 3

COMPARISON OF ALTERNATIVE RTE FOOD PROCESSING SYSTEMS
10 HIGHEST RATING 1 LOWEST RATING

	ENERGY FOOD REPRON CFTRI		ENERGY FOOD MIXI-THERM ENG		EXTRUSION GODHRA	
1.0 ENGINEERING FEATURES						
1.1 Indigenous Equipment	1	All manufactured in India	9	All manufactured in India with possible exception of clearing dehulling system	5	As proposed cleaning dehulling system, extrusion and size reduction equipment would required importation Currently India does not manufacture extruders and proportioner mills
1.2 Maintenance	8	Routine maintenance on a weekly basis Mills are highest mainterance items requiring replacement of screens and hammers on 6-12 mo basis	9	Very heavy duty equipment requiring very little maintenance Mills highest maintenance items requiring replacement of screens	7	Extruder must susceptable to wear Screw and barrel must be rebuilt by hard surface welding after 1000-1500h of operation Mills will require replacement of internal parts on a 6-12 mo basis
1.3 Economy of scale	4	Little economy of scale because system made up of many small machines Systems design from 1-10MT/shift	8	Scaleable with larger Systems designs from 5 to 10 MT/shift	8	Scaleable with larger extruders System designs from 4 to 4 MT/shift
1.4 Thermal efficiency		Large and roaster has thermal efficiency of [illegible] Electrical roasters have about a 50% thermal efficiency	6	High therm oil heating system has overall thermal efficiency of about 60	9	Extruders convert nearly all electrical energy to heat with about 90% efficiency

BEST AVAILABLE COPY

		ENERGY FOOD REPRON/CFTRI		ENERGY FOOD MIXI-THERM UNIT		EXTRUSION GODHRA
1 0	ENGINEERING FEATURES					
1 5	Energy cost	4 Highest using a mixture of electrical and liquid fuel	9	Lowest with most energy from liquid fuel	5	All energy from electricity
1 6	Labor intensity	10 Highest due to the batch nature of the process and little automation	8	Batch process requiring labor to move product	5	Continuous process with less hand operation
1 7	Skill level	8 All systems require the presence of mechanics and electricians, skilled operations and quality control personnel	8	All systems require the presence of mechanics and electricians,skilled operations and quality control personnel	8	All systems require the presence of mechanics and electricians, skilled operations and quality control personnel
1 8	Power outages	6 When power fails material in roaster will burn and be lost	10	Motor generator set will supply power during outage	5	Extrusion die must be quickly removed and extruder turned by hand to free screw otherwise extensive clean-up difficulty will arise
1 9	Loss	5 Some moisture loss during cleaning/ grinding and roasting Estimate loss at 8%	7	Moisture loss during roasting Estimate loss at 5%	7	Water added to extruder which reduces loss Estimate loss at 5%
1 10	Sanitation	6 Increased hand operation increases chance for contamination Dry cleaning of equip is required	7	Cooling requires contact with operators otherwise sanitation is good Wet cleaning of equipment and cooling carts can lead to sanitation problems	9	Little contact by operators with product Dry clean-up procedures employed
1 11	Experience in India with plant	8 5 plants commissioned	8	3 plants commissioned	5	2 wet extrusion plant commissioned LEC plant components only have been tested experimentally
1 12	Time to commission	10 9-12 mo	10	9-12 mo	5	15-18 mo

BEST AVAILABLE COPY

		ENERGY FOOD MERRON/CFTRI		ENERGY FOOD MIXI-THERM UNIT		EXTRUSION GODHRA
2 0 PRODUCT FEATURES						
2 1 Variety of ingredients	8	Grain inputs limited to whole kernels rather than broken pieces Roasting of soybeans needs to be demonstrated	8	All inputs must be milled before roasting Roasting of soybeans needs to be demonstrated	10	Can handle all ingredients including whole soybeans and broken grains
2 2 Flexibility	5	Limited to powdered foods that will require moistening to produce a large size finger food Flavourings added in form of powders	5	Limited to powdered foods that will require moistening to produce a large size finger food Flavourings added in form of powders	10	Can make both a granulated powdered RTE product as well as finger foods coated with flavouring
2 3 Functionality	6	Roasted ingredients have limited solubility and therefore cannot produce a smooth gruel Solubility improved by finer grinding (60-100 mesh) which is expensive	5	Roasted ingredients have limited solubility and therefore cannot produce a smooth gruel Solubility improved by finer grinding (60-100 mesh) which is expensive	8	Extrusion partially dextrinizes starch which increases it solubility making it possible to make a smooth instant gruel from material ground to 40-60 mesh for use in the supplemental feeding of 6 mos to 2 years infants
2 4 Acceptability	5	No quantitative studiesn on 6 mos to 6 yrs Ladoo and dry granular form apparently acceptable with older children Limited finger food capability but tableting may be able to form a product	5	No quantitative studies with children 6 mos to 6 years Ladoo and dry granular form apparently acceptable with older children Limited finger food capability but tableting may be able to form a product	8	No quantitative studies with children 6 mos to 6 yrs Ladoo, granular form and flavoured expanded pieces form various formulation apparently acceptable

BEST AVAILABLE COPY

		ENERGY FOOD REPRON/CFTRI		ENERGY FOOD MIXI-THERM UNIT		EXTRUSION GODHRA
1 0	ENGINEERING FEATURES					
2 5	Stability	6 3 mos stability on formulation with sugar or jaggery	6	3 mos stability on formulation with sugar or jaggery	6	Finger foods require drying to moistures less than 4% for acceptability and stability Granulated food stable for 6 mos
2 6	Fortification	10 Can be fortified by mixing in powdered V/M premix	10	Can be fortified by mixing in powdered V/M premix	10	Can be fortified by mixing in powdered V/M premix
2 7	Density	10 Quite dense leading to efficiencies in producing and transported	10	Quite dense	7	Granulated product about 25% less dense than roasted product Expanded finger food has about 50% of the density of ground flour leading to increased packaging and transportation costs

BEST AVAILABLE COPY

[illegible] because [illegible] units consist of a composite of smaller processing units. [illegible] thermal efficiency [illegible] the lowest [illegible] roasters used have limited [illegible] area. The lowest [illegible] cost [illegible] product occurs in the Panjee process which uses a lower cost liquid fuel source with reasonable energy efficiency.

All systems require a mixture of labor skills [illegible] operating. The Energy Food Process is the most labor intensive and also has the greatest potential to product contamination from handling.

Loss of electrical power causes serious disruption to any of the processes. The Panjee process eliminates the problem by providing a standby generator. Since it has the smallest electrical load, this standby approach is most [illegible] applied here. When power fails on the Energy Food or extrusion systems, the product in the roasters extruder is lost. More importantly, it is essential that the extruder be [illegible] turned immediately [illegible] the [illegible] it will be difficult to clean and restart.

Currently the greatest amount of experience in [illegible] exists with the roasting grinding mixing systems. Although high moisture extruders have been operated successfully in Anand and Hyderabad for [illegible] years, roasting systems could probably be commissioned in [illegible] months while extrusion systems would likely require 15-18 months to commission due to the need to [illegible] some equipment.

BEST AVAILABLE COPY

[illegible] Product Features

[illegible] increase the adaptability of the HTF processing systems. It is desirable for them to be able to process a whole range of raw ingredients. Extrusion is judged the most flexible in this regard by a narrow margin. Extrusion can handle both broken grains, which are often less expensive, and whole soybeans. The roaster being proposed probably can handle whole soy but this is yet to be demonstrated.

There are basic differences in the roasting and extrusion processes which yield substantially different products [illegible]. Extrusion cooks under both high temperature and shear with the result that the starch and protein molecules are severely disrupted which increase their solubility. Roasting merely heat denatures the starch and protein without unfolding or molecular disintegration so the material has very low solubility. The resulting molecular differences in the two products have profound effects on their functional properties and uses. The ground extruded product can be made into a smooth gruel by adding one part extruded base to two parts water. When roasted product is used in a similar manner, the food will settle out of solution and not make a suitable gruel. Unless the roasted product is ground very fine using an expensive impact pin mill, the product water mixture is [illegible] gritty. The impact of roasting on digestibility in the infant is unknown. Research has shown that enzyme digestion is less for roasted products than extruded products, perhaps indicating a lesser digestibility.

The acceptability of roasted products as a weaning food for 6 months to a year old children has not been determined. There are contradictory anecdotal comments on acceptability. An objective test needs to be

BEST AVAILABLE COPY

performed to better determine acceptability and digestibility issues so that the effectiveness of products made using each approach can be properly determined.

Any [illegible] food product [illegible] sugar/jaggery have limited shelf life because the sugar/jaggery quickly picks up moisture. In the rainy season this may be 2 months maximum which is marginally acceptable. Extruded finger foods need to have moistures less than 4 [illegible] if they are to be acceptable making their shelf life less than three months.

Density of the product is important to control to minimize packaging and transport costs. The roasting technologies have an advantage here. Packaging costs for extruded finger foods will be about 5 [illegible] more than the powdered version. If tableted roasted products are used as finger foods, their ability to resist break-up during shipping needs to be determined.

5.7 Cost Comparison

The individual proposals by PERRCH, CFTRI, Mini-Thermal Engineers and Kaira District Cooperative Milk Producers (Goonna) were carefully examined to try and make valid cost comparisons. Since each proposal dealt with a different formulation and varying cost elements and factors were considered, it made a valid comparison very difficult. To overcome some of these difficulties a so called normalized cost was developed for each proposal which contained the same cost elements and prices. Because the same formulation could not be used on each proposal it is not possible to make direct product cost comparisons on individual rations and so the processing cost was given for each system without ingredients included.

BEST AVAILABLE COPY

CAUTION - BECAUSE OF THE MANY ASSUMPTIONS WHICH HAD TO BE MADE, INTERPRETATION AND COMPARISONS OF THE COST NUMBERS PRESENTED NEED TO BE DONE WITH EXTREME CARE. THERE IS PROBABLY NO SIGNIFICANCE IN THE SMALL DIFFERENCES BETWEEN MOST COSTS PRESENTED ON TABLE 4.

Table 4 summarizes the results of the analysis of the costs obtained from the various proposals. All the data are presented as 000's of Rs/MT to make the comparisons easier. Detailed backup for the figures are in Tables 1, 2, and 7 in the appendix C.

The Panjeeri system has the lowest capital costs at about Rs [illegible] 5/MT because it is the simplest and perhaps shows the greatest economy of scale. No difference in capital costs exists between Energy Food and Extruded Food which had capital costs of about Rs 1.2 [illegible] /MT.

All products had most of their cost in the raw ingredients used. These ranged between 77 and 85% of the finished product cost. Another way of interpreting this number is that all the systems produced RTE precooked packaged food very cost-effectively. Panjeeri had the highest ingredient cost (Rs [illegible] 78/MT) since it used premilled flours and more oil. Energy Food had the lowest ingredient cost (Rs [illegible]) because it used no oil in the final formulation. On a kcal basis, these ingredient costs would be nearly equal because of the energy added by the oil.

The cost of an 8 g ration (approximately [illegible] of RTE) and produced from local ingredients was the same for extrusion and Energy Food at about Rs [illegible] 55/8 g. On a kcal basis, extrusion would show a slight advantage. Panjeeri is the most expensive cost [illegible] Rs [illegible] 67/8 g.

Processing costs for each of the systems were nearly identical at approximately Rs [illegible] 11/8 g ration. It should be emphasized

BEST AVAILABLE COPY

43

TABLE 4

CAPITAL COSTS	RS/MT/DAY	LEC PROPOSED	%	LEC NORMALISED	%	PANJEERI PROPOSED	%	PANJEERI NORMALISED	%	ENERGY FOOD PROPOSED	%	ENERGY FOOD NORMALISED	%
LAND BUILDING & EQUIPMENTS	RS/MT	10001		1137	-	498	-	897	-	763	-	1169	-
MANUFACTURING COSTS													
INGREDIENTS	RS/MT	6198	72	5629	81	6427	87	7078	85	3892	73	5176	77
LABOR & DIST	RS/MT	302	04	272	04	263	04	335	04	657	12	448	07
UTILITIES	RS/MT	91	01	123	02	76	01	77	01	230	04	177	03
PACKAGING	RS/MT	606	07	420	06	222	03	339	04	476	09	428	06
REPAIRS & MAINTENANCE	RS/MT	95	01	91	01	22	00	83	01	38	01	49	01
DEPRECIATION	RS/MT	83	01	79	01	41	01	59	01	57	01	68	01
FINANCIAL EXPENDITURES	RS/MT	1216	14	356	05	312	04	386	04	--	-	352	05
TOTAL	RS/MT	8591	100	6970	100	7363	100	8357	100	5344	100	6698	00
	RS/806	69		56		59		67		43		54	
	Rs/806 W/O INGREDIENTS	19		11		08		10		12		1	

* ALL FIGURES ARE 000 s RS/MT

BEST AVAILABLE COPY

[illegible] these processing costs merely cover actual costs and contain no operating or profit margin. They may also have underestimated the cost of distributing the product which can be quite variable based on location.

5.4 Discussion

An analysis of the various proposed RTE processes leads to the conclusion that all processes studied are capable of producing nutritious foods at attractive costs.

The selection of a specific process must therefore depend upon the suitability of the food for the target population. [illegible] appears [illegible] trusion has potential advantages in the acceptability area because of the solubility of the product allowing the production of an instant drink and its ability to make a wide variety of flavored and shaped products suitable for the whole range of recipients. Its principle disadvantage lies in the need to import the pieces of equipment including the extruder. Importation could be done expeditiously for initial plants while Indian manufacturers could [illegible] the manufacture of this equipment for subsequent plants.

Roasting grinding mixing is a demonstrated technology [illegible] and the products, although [illegible] variety appear acceptable to older children. An objective test needs to be run to determine how well they serve the weaning food needs for 6 months to 2 year old children. The roasting grinding mixing technology is fully indigenous and has the advantage of rapid replication and commissioning.

5.5 Proposed Processing Sites

5.5.1 Chandapur Godown

An inspection was made of the MAH FED godown at Chandapur slated for use as a RTE food processing factory. When inspected the building had a

supporting pillars and the roof truss system in place approximately [illegible] 4 [illegible] the brick and mortar wall between the supporting pillars was complete. Roof, windows, doors, floors, roadway around building, eletrical service to building including lighting and power distribution, office, laboratory, [illegible] and change [illegible] were yet to be added. Construction began in February 1985 with promised completion by September 1985.

Building features appeared suitable for eventual use as a processing plant. Outside dimensions are 175 ft x [illegible]. The plan calls for a divider down the middle to create two 875 ft² areas.

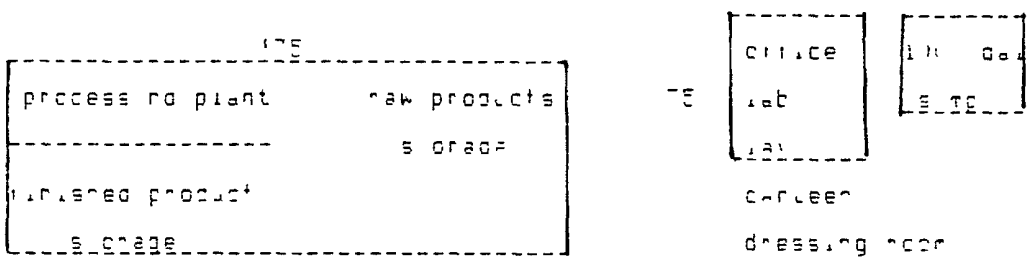

Roof has 20 clearance from the floor and 75 [illegible] at ridge between girders. Processing area of 4725 ft² would accommodate a plant producing 10 MT shift of either roasted or extruded RTE food. Raw material storage of 875 ft² is sufficient for 7 days supply of approximately 5 MT and finished product storage of 4775 ft² for 15 days or 250 MT of finished product.

Interior design will include cement floors throughout. In the processing area there will be tiles on walls up to 7 meters which will allow wash down during clean

up. All interior partitions will be floor to roof to allow sealing off of individual plant sections. Exterior openings will have both glazing and screen where ventilation will be provided by fans yet to be designed and installed. Each of these areas can be sealed to allow fumigation. Rat protection consists of an exterior ledge around the building. Precaution must be taken to minimize entry through door openings.

Major power stations exist at Chandrapur and a 11 KVA transformer is adjacent to the plant. Plans call for bringing 8 KVA line to the plant which would be sufficient for roasting/grinding milling option but inadequate for extrusion. Additional plant power is apparentally available if desired. Power outages were claimed to be the maximum of two a day of the duration of less than 5 min. (while we were eating lunch power was out and had been out for over an hour).

Details of office, lab, lavatory and locker building were very vague. They plan 700 ft^2 which is inadequate for the task. They are not able to give more details until design of factory is finalized.

Water supply for plant consisted of a tube well and cistern (1,000 gal). Plans call for a septic tank with outside drainage in a natural waterway.

Cost of godown and modifications was slated for Rs. [illegible] x 10^5 or Rs. 514 ft^2 or Rs. 51 m^2. This is a very high price although it includes land, water, electricity, roads and building.

A question exists as to the capabilities of the processing plant personnel which would be assigned to the Chandrapur site. People with food processing experience were not available and would have to be hired.

5.5.7 Godhra Site

The Godhra site in Panch Mahal District was on the property being used by Kaira District Cooperative Dairy Producers Union Ltd. located there. Initial plans called for a building 1 M x 50M which would not be adequate. The proposed plan shows 1500m² which would be roughly satisfactory where 1800m² would be better. No mention was made of the availability of additional land requirement at the Panch Mahal site to accomodate the larger building. The additional land question needs to be resolved before the site can be unkategorically approved. The Godhra site appears have all the necessary infrastructure to adequately support a [illegible] food factory. These include water, sewer, electrical capacity (direct to power station) and roads. The dairy operation located there appears to be well run, practicing sanitation of a food processing standard and have a number of personnel with food processing management experience.

5.6 Equipment Expenditures

Based on an evaluation of the proposals, equipment costs for a 22 MT day plant in Godhra and a 15 MT day plant in Chandrapur are as follows:

5.6.1 Chandrapur, Maharashtra - Roasting and Grinding/Mixing plant to be located in Markfed godown
capacity 15 MT day
raw material storage in bags 7 mo or 1125 MT
finished product storage 1/2 mo or 188 MT
equipment costs Rs [illegible]
installation costs Rs [illegible]
Rs [illegible]

5.6.2 Godhra, Gujarat - LED (extrusion) plant
capacity 22 MT day
raw material storage 7 mo or 1650 MT
finished product storage 1/2 mo or 275 MT
equipment costs Rs [illegible]
installation costs Rs [illegible]
Rs [illegible]

Currently the budget in the ICDS for equipment is $[illegible], or about $[illegible], short of the projected costs

6 [illegible]

6.1 [illegible] extrusion and roasting/grinding milling are appropriate technologies for the production of weaning and RTE foods for use in the [illegible] program.

6.2 The estimated processing costs are similar in the two systems.

6.3 The advantages of an extrusion process are: (1) it is capable of producing a precooked cereal type product that makes smooth instant gruels suitable for feeding infants; (2) there is [illegible] handling of material as it [illegible] from raw ingredients [illegible] packaged product [illegible]; and (3) it is capable of producing RTE snacks and [illegible] with a great variety of shapes, sizes, textures and flavors.

6.4 The main disadvantages of the extrusion process are: [illegible] extruders are not currently made in India and the process is more sensitive to power failures.

6.5 The advantages of a roasting and grinding milling process are: (1) all needed equipment is currently being made in India and (2) roasted products are traditional and familiar foods in India.

6.6 The disadvantages of a roasting grinding milling process are: (1) it is not capable of producing a precooked cereal type product that makes smooth instant gruels [illegible] for feeding infants; (2) the many separate steps involved in the process provide [illegible] for [illegible] contamination; and (3) [illegible] can be added to the product [illegible] the process has [illegible] in producing RTE foods with a great variety of sizes and shapes.

6.7 Based on discussions with engineers from Patel Bros. and Mini-Therm, the capability exists in India to manufacture extruders if the patent liscensing situation can be resolved and a market assured.

6.8 The MARKFED godown listed at Chandrapur is generally suitable for the installation of an RTE food processing plant.

6.9 The plant site visited at Godhra and the necessary infrastructure to support a RTE food processing plant. Land availability for an expanded plant facility remains in question and needs to be resolved before a plant is authorized.

6.10 Funds for 15MT day RTE food processing in Chandrapur are estimated to be Rs. 2.7 [illegible] and a 22MT day plant at Godhra to be Rs. 4.2 [illegible].

6.11 The $225,[illegible] set aside for processing plants in the IODS financial plan is $722 [illegible] short of the amount required.

6.12 Hygienic practices in the food plants visited were generally not adequate and need to be improved.

6.13 Little systematic study has been done to assure the acceptability of food supplements currently used in the IODS Program based on the sites visited.

6.14 Vitamin and mineral fortification of food supplements currently used in the IODS Program at the sites visited is less extensive than would be desirable.

6.15 The Protein Foods and Nutrition Development Association of India represents individuals and firms with substantial expertise in food processing. It would be beneficial to utilize this expertise to the greatest extent possible in food processing for the IODS Program.

7.1 RECOMMENDATIONS

7.1 Additional funds in the amount of $7[illegible], [illegible] need to be added to the budget for food processing plants in the ICDS financial plan.

7.2 Shortcomings in the Chandrapur and Godhra plant sites need to be overcome before plants are authorized. These are 1) Chandrapur-space for laboratories, lorries, facilities, laboratories, office and 2) Godhra-adequate land to build at least a 15 [illegible] plant facility.

7.3 The proposed plant for the Godhra site should be based on extrusion and for the Chandrapur site on roasting, grinding, milling technology.

7.4 Specific plant design criteria need to be developed for plants in Gujarat and Maharashtra States. A decision needs to be made about the products to be manufactured at each site and which clientele group is to be reached.

7.5 Based on specific plant design criteria, bidding specifications for the actual plants need to be developed with the assistance of consultants so that formal bids can be received, evaluated and construction can begin.

7.6 The actual plant design accepted for each location should be based on evaluation of competitive bids made against specific design criteria.

7.7 Comparable data should be obtained from both plants on capital costs, operating costs, product quality and acceptability.

7.8 Existing sanitation standards for food manufacturing plants in India should be assembled, dessiminated to all concerned parties, and enforced in all existing and future RTE plants.

7.9 An individual with knowledge and experience in plant sanitation should be appointed by the supervising authorities of the USAID ICDS Program to visit plant sites and enforce hygienic standards.

7.10 Quality control standards and procedures need to be established for all present and future ICDS plants.

7.11 A food technologist, knowledgeable and experienced in quality control, should be appointed by the supervising authorities of the USAID ICDS Program to visit plant sites and enforce quality control standards.

7.12 Each plant site should employ a food technologist with knowledge and experience in quality control and the technology being used at that plant.

7.13 The expertise in the private sector related to food processing and equipment manufacturing needs to be involved in the ICDS Project.

7.14 Assistance should be provided to equipment manufacturers in obtaining licenses and/or manufacturing rights from foreign companies for extrusion, milling and grain cleaning equipment appropriate to RTE food manufacture.

7.15 A study on the acceptability needs to be carried out with both energy food and food extruded or an instant extruder particularly in regard to 5 months to 2 year old children.

7.16 A comparison of weaning food made by roasting cereal and pulse together vs. separately needs to be carried out.

7.17 Current and future manufacturers of RTE products should set up procedures to obtain systematic and reliable data on a continuing basis from women workers knowledgeable about child feeding practices at the Anganwadis concerning product acceptability, use and possible product improvement.

7.10 The use of indigenous whole soybeans and/or edible soybean [illegible] ingredients in weaning and [illegible] foods needs to be [illegible] pursued.

7.[illegible] [illegible] complete vitamin and mineral fortification [illegible] should be added to food supplements currently in use in the [illegible] program.

8.1 REFERENCES

1. Harper, J. M. and Jansen, G. R. - Production of Nutritious Weaning Foods in Developing Countries By Low-Cost Extrusion Technology. Food Reviews International 1, 27-97 (1985)

2. Project Paper - India Integrated Child Development Services (786-0476). USAID/India June 1983

3. Report of a Workshop on Weaning Foods, College of Home Science, Andhra Pradesh Agricultural University, Hyderabad-July 1-2, 1987

4. Beaton, G. H. and Chassemi, H. American J. Clin. Nutrition 35 4 Supplement p 864 (1982)

5. Cox, E. The Contributions of New Food Mixtures to the Reduction of Malnutrition. A Second Look FAO Food and Nutrition 3 2, 2-1 (1977)

6. Supplementary Foods for Combating Child Malnutrition in India. UNICEF, New Delhi - November 1977

7. CDS - Working Guide - AFE Data and Minutes of Social and Women's Welfare, Government of India, April 1985

8. Jansen, G. R. - 'Importance of Protein Quality in Human Nutrition' H. L. Wilke, D. L. Hopkins and D. H. Waggle Eds. Academic Press, N.Y. 1979 page 149

9. Sampson, D. A. and Jansen, G. R. - Protein and Energy Nutrition During Lactation. Ann. Rev. Nutrition 4, 47 (1984

10. Jansen, G. R. - A Consideration of Allowable Fiber Levels in Weaning Foods. UNU Food and Nutrition Bulletin 2 4, 78-47 (198

11. Morck, T. A., Lynch, S. R., Sulkie, B. S. and Cook, J. D. - Iron Availability from Infant Food Supplements. Am. J. Clin. Nutrition 34, 267-2674 (1981

54

APPENDIX A

SCHEDULE FOR USAID ASSISTED ICDS
FOOD PROCESSING PLANTS FEASIBILITY STUDY

Drs G Richard Jansen and Judson M Harper
Colorado State University

JUL [illegible] TUESDAY-6 [illegible] A M	Delhi - Arrival PA#66
	Maurya Sheraton Hotel
9 A M - 12 P M	USAID - Briefing by Offices of Health & Nutrition (HN) and Food for Development (FFD) - Ashok Anne # 152[illegible]
2 [illegible] P M	Mrs Connie Johnson, Mr Menon UNICEF Dr Sam Dalal recently retired
[illegible]	Mr M S Dalal Joint Secretary Ministry of Social and Women's Welfare (MSSW
	Mr [illegible] Gupta Under Secretary, USAID ICDS Project Manager
	Maurya Sheraton Hotel
[illegible] WEDNESDAY 5 [illegible] A M	U S Embassy car will pick up Jansen and Harper at Maurya Sheraton Hotel and take to Airport
	Delhi to Ahmedabad via IC 461
	[illegible] to 7 25
	D A A Contractor, Joint Director (ICDS), Department of Health Family Welfare
	Gujarat Agro Industries Corporation Mr Dave
	Drive to Godhra
P M	See AMUL Godhra Dairy Plant Facility
	Drive to Anand
	Night Halt - NDDB Guest House, Anand
	Dinner with L M Sud, Secretary of Health Family Welfare C Fernandez Deputy Secretary and Dr A A Contractor Joint Director

AUGUST 1 THURSDA	A M	See AMUL FTC and Weaning Food Plant, V H Shah Modar Complex, Anand and discuss Godhra Proposal
	P M	See Dr A A Chotani, Executive Director, NDC [illegible]
		Drive to Baroda
		Express Hotel
AUGUST 2 FRIDAY	A M	Baroda to Bombay via IC 142
		07 5[illegible] - 09 1[illegible]
		Drive to Trane to see Sikhada Processing Plant, Silo Dal Mill MARKFED
	[illegible] P M	Protein Foods Nutrition De Association, Mr [illegible] Nagarsekar
	4 [illegible] P M	UNICHEM Laboratories Ltd Am Ltd Mod
		Ambassador Hotel
AUGUST 3 SATURDA	-11 A M	Mr F Subrahmanyam, Secretary, Rural Development Department, CARE, and MARKFED
	-2 [illegible] P M	Patel Brothers Services & Engineering Private Ltd Pesi Patel
	4 [illegible] - P M	M[illegible] Engineers, Ramesh Tekchandane
		Ambassador Hotel
AUGUST 4 SUNDAY		FREE
		Bombay to Nagpur via IC 129
		19 2[illegible] - [illegible]
		Radhika Hotel
AUGUST 5 MONDAY	- A M	Drive to Chandrapur (4 hours)
		See MARKFED Godown and Building for Proposed Plant

- P M	Drive to Nagpu
	Nagpur to Bomba via IC 17
	21 05 to 22 2'
	Flara Airport Hotel
AUGUST 6 TUESDAY	Bombay to Hyderabad via IC 119
	7 01 to 8 1
	See Hyderabad REPRON Food Plant, Dr Mallikharjuna Rao, Food Technologist
	Hyderabad to Bangalore via IC 4
	14 5 - 15 5
	Drive to Mysore
	Lalitha Mahal Palace Ho e
AUGUST 7 WEDNESDAY - A M	Central Food Technolog Research Institute, Dr V H Potty, Head, Technology Utilization Discipline and Mr N Subramanian Area Coordinator Oilseeds Technolog Discipline
	See Energy Food Plant
	Drive to Bangalore
	Bangalore to Delhi via IC 81
	18 2 to 22 05
	Maurya Sheraton Hotel
AUGUST 8 THURSDAY 8 00 AM	Drive to Gurgaon-See Parveen Plant (I T Srinivasan, CHFE will meet at Maur a Sheraton Hotel with Carl
11 AM	CHFE/India Headquarters Douglas Atwood, Robert Coberly, and others
AUGUST 8 - 14	Prepare report and present to FCSWW and USAID
	Re ise as needed
	(Dr Harper departs Aug st 11)

PA MAR ch 8 1 85 SCHEDULE

APPENDIX B

Individuals Contacted During Consultancy

USAID/India

Mr. Mark Ann Anderson, Nutrition Officer, HN
Mr. Harry Houck, FFD
Ms. Christine Anamczyk, FFD
Mr. J. F. Chedy, FFD
Mr. Kotwaney
Mr. Samresh Sengupta, HN

John Snow Incorporated

Mr. [illegible]

CARE India

Mr. Douglas Atwood, Director
Mr. Robert Coberly, Asst. Director
Mr. Joseph Steele, Deputy Director
Mr. K. T. Srinivasan, Deputy Asst. Director
CARE India Senior Staff Members
Mr. T. P. Sadashivan, CARE/Ahmedabad
Mr. [illegible] Chopra, CARE/Andhra Pradesh
Mr. P. K. Mohapatra, CARE/Gujarat
Mr. P. Viswas, CARE/Gujarat

Ministry of Social and Women Welfare

Mr. M. S. Dalal, Joint Secretary
Mr. [illegible] Gupta, Under Secretary

UNICEF

Dr. Sam Dalal
Mrs. Connie Johnson
Mr. Menon

GUJARAT

Mr. L. M. Sood, Secretary, Health and Family Welfare
Dr. A. A. Contractor, Joint Director ICCS Project
Dr. H. L. Mahavati, Asst. Director, Health
Mr. Christine Fernandes, Deputy Secretary
Mr. P. M. Panchal, Training Officer, Government of Gujarat
Mr. Ashwin P. Dave, Agro Industries Corporation
Dr. J. C. Patel, Asst. Director, Godhra
Dr. P. N. Shah, DHO, Godhra
Mr. M. P. Kataria, PO, Godhra
Mr. Prafull Parmar, EIO, Godhra
Mr. Harshad Shah, CDPO, Godhra
Mr. Babubhai K. Patel, Chairman, Panch Mahals, Godhra

GUJARAT (cont)

Mr. [illegible] Mathur, General Manager, Panch Mahals Dairy, Godhra
Mr. [illegible] Shah, Managing Director, Amul Dairy, Anand
Mr. [illegible] G. Shah, Assistant Manager, Quality Control, Amul Dairy, Anand
Mr. [illegible] Jayas, Assistant General Manager, Amul Dairy, Anand
Mr. [illegible] Sadashivan, CARE/Gujarat
Mr. [illegible] Mohapatra, CARE/Gujarat
Mr. Patel, Chairman, Panch Mahal Cooperative Producer's Union
Dr. [illegible] Chakraborty, Director, Applied National Dairy Development Board Research, Anand
[illegible] Chotani, Executive Director, National Dairy Development Board Oilseeds and Vegetable Oil Wing

MAHARASHTRA

Mr. [illegible] Jaafar, Additional Managing Director, MARKFED
Mr. [illegible] Joint Director, [illegible], MARKFED
Mr. [illegible] Salunke, Manager Production and Distribution, MARKFED
Mr. Acharya, MARKFED
Mr. Rowan, Godown In-charge, MARKFED
Dr. [illegible] Patel, Factory Manager, MARKFED, Thane
Mr. [illegible] Sivaramanyam, Secretary, Rural Development, Govt. of Maharashtra
Mr. P. B. Desai, Deputy Secretary, Rural Development Department, Government of Maharashtra
Mr. Ashok Basak, Managing Director, Maharashtra Sachivalar
Mr. [illegible], District Manager, Thane District
Mr. P. M. Prasade, District Information Officer, Thane
Mr. N. S. Srivasan, CARE Maharashtra
Mr. Hosing, CARE/Maharashtra
Mr. [illegible] Mutinya, CARE Maharashtra
Mr. Pes Patel, Patel Brothers Engineering
Mr. Ramesh Tekchandane, Mini-Therm Engineers
Dr. [illegible], Executive Secretary, Protein Foods and Nutrition Development Association of India, PFNDAI
Mr. M. L. Badam, PFNDAI
Dr. R. [illegible], PFNDAI
Mr. [illegible] S. Rochkhanawala, PFNDAI
Mr. Prakash M. Sarat, PFNDAI
Mr. [illegible] S. Mohan, PFNDAI
Mr. Sri [illegible] Modi, PFNDAI
Mr. S. [illegible] V. Rao, PFNDAI
Mr. R. D. Shenoi, Hindustan Copper Products Ltd., PFNDAI
Mr. Nalin [illegible] Vissangi, Indian Plastics & Chemicals Pvt. Ltd., PFNDAI
Dr. V. M. Adhikari, Roche Products Ltd., PFNDAI
Dr. D. V. Rege, UDCT
Mr. [illegible], District Marketing Officer, Agriculture Produce Market Committee, Faun Nagri, Chandrapur
Mr. S. Y. Pote, Deputy Manager, Agriculture Produce Market Committee

ANDHRA PRADESH

Dr. Mallikharajune Rao, Food Technologist, REPPON Food Factory, Hyderabad
Dr. K. Mallikharan Rao, Managing Director, REPPON Food Factory, Hyderabad
Mr. V. K. Chopra, CARE Andhra Pradesh

KARNATAKA

Dr. [illegible], Head Technology Utilization, CFTRI, Mysore
Dr. [illegible], Coordinator, Oilseeds Technology, CFTRI, Mysore
Mr. [illegible] Ramakrishnan, Managing Director, Karnataka State Agro-Corn Products Limited, Mysore
Dr. [illegible], Technology Discipline, CFTRI, Mysore
Dr. [illegible], CFTRI, Mysore

[illegible]

Mr. [illegible], Plant Manager, Gurgaon
Mr. [illegible], Manager, Panjeen Plant

APPENDIX C

TABLE 1

CAPITAL COSTS

SYSTEM LEC - GUJHRA PROPOSAL
CAPACITY 2 [illegible] MT PR 55 MT/YR [illegible] SH F S DA [illegible] DA YR

		AS PROPOSED			NORMALIZED		
					ACRES		COST RS 000
1	LAND AND BUILDINGS						
1 1	LAND (Amount Cost				1		100
1 2	SITE DEVELOPMENT	-					25
				COST RS			COST RS
1 3	BUILDING (Area Cost)	m²	Rs/m²	000 s	m²	Rs/m²	000
	RAW MATERIAL STORAGE				1000	10 0	1
	PROCESSING				4 0	100	40
	FIN SHEET PROD STORAGE				15	1 0	15
	OFFICE	150	150	225	75	15 0	112 5
	LABORATOR				5	180	90
	LOCKER ROOM				50	180	90
	LAVATOR				5	180	90
	CANTEE				50	15	75
	TOTAL	150		225	1825		20 7 5
				RS			RS
2 0	PROCESSING EQUIPMENT			000 S			000 S
	PREPROCESSING			152			897
	HEAT TREATMENT			100			1420
	GRINDING BLENDING			5 0			545
	PACKAGING			107			118
	LABORATORY			-			70
	SPARE PARTS			-			-
	ELECTRICAL			25			25
	GENERATOR			-			-
	TOTAL			[illegible]			[illegible]
3	INSTALLATION 10			787			787
4 0	ENGINEERING CONSULTANTS 15 BUILDING/EQUIPMENT			-			[illegible]
5 0	TOTAL CAPITAL COSTS			RS 6620			RS 75 7

MANUFACTURING COSTS/YR

SYSTEM [illegible] - CODHRA PROPOSA
CAPACITY [illegible] MT HR [illegible] MT [illegible], [illegible] FTS/DAY, [illegible] DAY [illegible]

1.0 INGREDIENTS/YR	AS PROPOSED			NORMALIZED		
	MT	PRICE RS/MT	COST RS	MT	PRICE RS/MT	COST R
	[illegible]		[illegible]	[illegible]		[illegible]
CORN				4284	28[illegible]	11995
CORN FLOUR	4284	7200	137[illegible]9			
SOY				1464	30[illegible]	4792
DFSP	76[illegible]	50[illegible]	7800			
OIL	7[illegible]4	17[illegible]	119[illegible]9			
SUGAR	72	8[illegible]	57[illegible]	1440	8[illegible]	11520
[illegible]	142	26[illegible]	7[illegible]92	284	26[illegible]	7384
CONDIMENTS	172	15[illegible]	198			
SUB TOTAL		RS	4[illegible]9		RS	7529[illegible]
[illegible] INGREDIENTS 1			95			
TOTAL INGREDIENTS COSTS		RS	4[illegible]		RS	7715

2.0 LABOR	NO	RS/MO	COST RS	NO	RS/MO	COST R
			[illegible]			[illegible]
2.1 PRODUCTION						
SUPERVISOR	7	15[illegible]	54	7	7	1[illegible]
MECH ELEC	6	150[illegible]	1[illegible]9	6	150[illegible]	1[illegible]8
SKILLED	3	15[illegible]	54	7	75[illegible]	[illegible]
SEMI-SKILLED	9	1[illegible]	1[illegible]9	9	5[illegible]	54
UNSKILLED	15	1[illegible]	18	15	[illegible]	54
ABSENTEEISM	7	10[illegible]	84	7	75	6[illegible]
2.2 ADMINISTRATION						
MANAGER	1	7[illegible]	7[illegible]	1	7	7[illegible]
SUPERINTENDENT		25[illegible]	7	1	250	7
ACCOUNTING	1	15[illegible]	18	6	15[illegible]	1[illegible]
SECURITY	-	-	-	7	5	1[illegible]
2.3 QUALITY CONTROL						
FOOD TECH	7	25[illegible]	9[illegible]	7	250	9
ASSISTANT	-	-		7	100	7
TOTAL ALL WAGES		RS	762		RS	7[illegible]
2.4 PERQUISITES ON WAGES 70%			228			-
2.5 DISTRIBUTION COSTS						
RS [illegible] MT			594			5[illegible]
2.6 OVER HEADS						
TAXES AND INSURANCE 5% CAP COST			71[illegible]			77
ADMINISTRATIVE COST			1[illegible]			1[illegible]

3.0	UTILITIES	AMT	RS/AMT	COST RS 000 s	AMT	RS AMT	COS F 000
	7.1 ELECTRICITY	7 KWH/MT	0.7 KWH	6	40 KWH/MT	70/KWH	8
	7.2 WATER		-		200 CAL/MT	10/100 GA	17
	7.3 FUEL		-		-	-	-
	TOTAL UTILITY			600			817
4.0	PACKAGING						
	SIZE	10 KG			25KG		
	TYPE	PAPER W/HDPE LINER			WOVEN HDPE W HDPE LINER		
		NO	PRICE	COST RS 000 s	NO	PRICE	COST 00
	BAG	5600	5/BAG	2800	265000	8 BAG	2120
	LINER	56000	1.2 LINER	672	265000	1.5 LINER	400
	MISC			558			55
	TOTAL PACKAGING			4			2770
5.0	REPAIRS & MAINTENANCE			624			6
6.0	DEPRECIATION						
	BUILDING 5%			117			[illegible]
	EQUIPMENT 10%			437			421
7.0	FINANCIAL EXPENSES						
	INTEREST ON CAPITAL 00			662			750
	INTEREST ON WORKING CAP 15%			1904			1606
	CONTINGENCY			5561			-
8.0	TOTAL COST 00 s Rs			56707			4691
	RS MT			8591			697
	RS/BOC			RS 69			RS 5
	RS 8 G W O INGREDIENTS			RS 0.19			RS 1

TABLE 2

CAPITAL COSTS

SYSTEM ENERG FOOD - REPROC CFTRI
CAPACITY 0.5 MT HR 76 MT/YR, 7 SHIFTS DAY 700 DAY/YR

		AS PROPOSED			ORMALIZED		
		ACRES		COST RS 000's	ACRES		COST RS 000's
1.0	LAND AND BUILDINGS						
1.1	LAND (Amount Cost	2		200	1		10
1.2	SITE DEVELOPMENT			50			25
1.3	BUILDING (Area Cost	m²	Rs m²	COST 000's	m²	Rs m²	COST 000's
	RAW MATERIAL STORAGE	108	65	7	25	[illegible]	55
	PROCESSING	648	65	420	65	10	65
	FINISHED PROD STORAGE	216	65	14	8	1000	8
	OFFICE	71	1600	114	75	1500	112
	LABORATORY	54	160	86	5	1800	9
	LOCKER ROOM				60	1800	108
	LAVATOR	19	160	29	6	1800	108
	CANTEEN	54	160	86	4	1500	60
	TOTAL	1169		946	1565		758
2	PROCESSING EQUIPMENT			RS 000's			RS 000's
	PREPROCESSING			14			140
	HEAT TREATMENT			770			--
	GRINDING BLENDING			410			55
	PACKAGING			--			
	LABORATORY			-			-
	SPARE PARTS			-			15
	ELECTRICAL			10			1
	GENERATOR			-			-
	TOTAL			135			141
3	INSTALLATION 10			2			14
4	ENGINEERING/CONSULTANTS 15 BUILDING & EQUIPMENT			-			55
5	TOTAL CAPITAL COSTS			RS 2746			RS 4[illegible]

MANUFACTURING COSTS

SYSTEM ENERGY FOOD - REPROCESSED
CAPACITY [illegible] MT/ [illegible] MT [illegible] PRODUCTS/DAY, [illegible] DAYS/YR

		AS PROCESSED			NORMALIZED		
		MT	PRICE RS/MT	COST RS	MT	PRICE RS/MT	COST RS
		000'S					
1.0	INGREDIENTS/YR						
	WHEAT	2268	250	567	2268	250	567
	GROUND NUT CAKE	378	500	189	378	500	189
	GRAM FLOUR	378	6000	2268	378	6000	2268
	CHICORY	828	400	3312			-
	SUGAR				828	800	662
	[illegible]	24	700	17	24	700	17
	SUB TOTAL		RS	1401		RS	1403
	MISCELLANEOUS INGREDIENTS 1%			14			
	TOTAL INGREDIENTS COSTS			1415			1417
2.0	LABOUR	NO	RS/MO	COST RS/MT	NO	RS/MO	COST RS/MT
2.1	PRODUCTION						
	SUPERVISOR	1	1000	1	1	1000	1
	MECH ELEC	18	600	18	18	600	18
	SKILLED	1	600	18	1	600	18
	SEMI-SKILLED					500	
	UNSKILLED	15	400	6	40	400	16
	MISCELLANEOUS				9	750	7
2.2	ADMINISTRATIO						
	MANAGER	1	2000	24	1	1000	12
	SUPERINTENDENT	2	1500	36	1	2500	30
	ACCOUNTING	8	600	58	8	1200	115
	SECURITY	5	500	30	5	500	30
2.3	QUALITY CONTROL						
	FOOD TECH	2	1000	24	2	2500	60
	ASSISTANT	2	400	10	2	1000	24
	TOTAL WAGES		RS	924		RS	1000
2.4	PERQUISITES ON WAGES 1%			9			10
2.5	DISTRIBUTION COSTS						
	RS 6 PT			144			144
2.6	OVER HEADS						
	TAXES AND INSURANCE 5 CHG COST			50			50
	ADMINISTRATIVE COST			50			50

3 (	UTILITIES	AMT	PS AM	COST ('000's)	AMT	PS AM	COST ('000)
	3 1 ELECTRICITY	25 UNITS MT	5/UNIT	450	250 KWH/MT	0 7/KWH	27[illegible]
	3 2 WATER			18	200 GAL MT	1 10 GAL	8
	3 3 FUEL	25 UNIT MT	4 L	[illegible]	25L/M	4 L	[illegible]
	TOTAL UTILITIES			828			678
4 (	PACKAGING						
	SIZE	25-1 KG HDPE BAGS			25KG		
	TYPE	HDPE OUTER BAG			WOVEN HDPE W/T		GAGE HDPE LINE
		NO		COST ('000's)	NO		COST ('000)
	BAG	144	8 BAG	1152	144	8 BAG	1152
	LINER	[illegible]	[illegible] BAG	54[illegible]	144	[illegible] LINER	2[illegible]6
	MISC						[illegible]
	TOTAL PACKAGING			1692			1547
5 (	REPAIRS MAINTENANCE			--			176
6 (	DEPRECIATION						
	BUILDING 5%			5[illegible]			88
	EQUIPMENT 10			155			155
7 (	FINANCIAL EXPENSES						
	INTEREST ON CAPITAL 1			-			421
	INTEREST ON WORKING CAP 15%			[illegible]			848
8	TOTAL COST			1[illegible]			2411
	RS MT			RS 5747			RS [illegible]
	RS 8 [illegible]			RS [illegible] 47			RS [illegible] 5
	RS/S [illegible] W O I GREDIENTS			RS [illegible]			RS 1

TABLE 7

CAPITAL COSTS

SYSTEM [illegible] THERM [illegible]
CAPACITY [illegible] 625 M [illegible] SHIFTS/[illegible] DAY YR

1	LAND AND BUILDINGS	AS PROPOSED			NORMALIZED		
					ACRES		COST RS
1.1	LAND (Amount Cos	-			1[illegible]		100
1.2	SITE DEVELOPMENT	-					20
1.3	BUILDING Area Cos			COST RS			COST RS
		m²	Rs m²	[illegible]	m²	Rs m²	[illegible]
	RAW MATERIAL STORAGE	[illegible]	150	[illegible]	[illegible]	[illegible]	[illegible]
	PROCESSING	10	15	18	2[illegible]	1000	2[illegible]
	FINISHED PROD STORAGE	100	15[illegible]	[illegible]	5[illegible]	[illegible]	5
	OFFICE				5[illegible]	15	9
	LABORATORY	8	15[illegible]	[illegible]	50	18[illegible]	[illegible]
	LOCKER ROOM				5	19	9
	LAVATORY				[illegible]	18[illegible]	[illegible]
	CANTEEN				5[illegible]	15[illegible]	[illegible]
	TOTAL	50		[illegible]	[illegible]		[illegible]
				RS			RS
2.1	PROCESSING EQUIPMENT			[illegible]			[illegible]
	PREPROCESSING			[illegible]			[illegible]
	HEAT TREAT			[illegible]			[illegible]
	GRINDING BLENDING			475			475
	RAD AGING			[illegible]			
	LABORATORY			-			
	SPARE PARTS			-			
	ELECTRICAL			1[illegible]			1[illegible]
	GENERATOR			1[illegible]			[illegible]
	TOTAL			[illegible]			194
3	INSTALLATION 1[illegible]			[illegible]			[illegible]
4	ENGINEERING/CONSULTANTS 15% BUILDING EQUIPMENT			-			[illegible]
5	TOTAL CAPITAL COSTS			RS [illegible]			RS [illegible]

MANUFACTURING COSTS

SYSTEM [illegible]
CAPACITY [illegible] DAY YR

[illegible]	AS PROPOSED			[illegible]		
	[illegible]	[illegible] RS/MT	[illegible]	[illegible]	[illegible] RS/MT	[illegible]
WHEAT FLOUR	2025	2900	5875	2025	290	5875
[illegible]	[illegible]	550	[illegible]	90	5500	495
OIL	45	17000	765	450	17000	765
SUGAR	[illegible]	8	[illegible]	1100	8000	[illegible]
[illegible]				107	[illegible]	[illegible]
SUB TOTAL		RS	27475		RS	[illegible]
[illegible] YIELD [illegible] INGREDIENTS 95				95%		
TOTAL INGREDIENTS COSTS			2892			7185

2 LABOR

	NO	RS/MO	COST RS 000	NO	RS/MO	COST RS 000
2.1 PRODUCTION						
SUPERVISOR	[illegible]	[illegible]	[illegible]	[illegible]	[illegible]	[illegible]
MELH/ELEC	[illegible]	15	54	[illegible]	15	54
SKILLED	6	750	54	6	75	54
SEMI-SKILLED	18	500	108	18	50	108
UNSKILLED	2	700	[illegible]	21	[illegible]	[illegible]
ABSENTEE SM	-			10	75	[illegible]
2.2 ADMINISTRATION						
MANAGER	1	[illegible]	[illegible]		[illegible]	[illegible]
SUPERINTENDENT	[illegible]	25	[illegible]	[illegible]	25	[illegible]
ACCOUNT	[illegible]	10	[illegible]	[illegible]	15	[illegible]
SECURITY	[illegible]	5	[illegible]	[illegible]	[illegible]	[illegible]
2.3 QUALITY CONTROL						
FOOD TECH	-	-	-	[illegible]	[illegible]	[illegible]
ASSISTANT	-	-	-	[illegible]	[illegible]	[illegible]
TOTAL ALL WAGES			592			[illegible]
2.4 PERQUISITES ON WAGES [illegible]			-			-
2.5 DISTRIBUTION COSTS RS 9 /MT			4[illegible]5			4[illegible]5
2.6 OVERHEADS						
TAXES AND INSURANCE [illegible] CAP COS			[illegible]			[illegible]
ADMINISTRATIVE COST			[illegible]5			75

7.0	UTILITIES	AM	RS/AMT	COST RS 000's	AM	RS AM	COST 000's
7.1	ELECTRICITY	5 KWH MT	75 KWH	170	5 KWH/MT	[illegible] /KWH	68
	[illegible]	-	-	-	[illegible] GA /MT	[illegible]	[illegible]
	[illegible] FUEL	15 MT	[illegible]	17	15 MT	4 [illegible]	[illegible]
	TOTAL UTILITY			74[illegible]			74[illegible]
4.0	PACKAGING						
	SIZE	2[illegible]			2[illegible]		
	TYPE	WOODEN HDPE BAG			WOVEN HDPE W[illegible]	GUAGE HDPE LINER	
		NO	PRICE	COST RS 000's	NO	PRICE	COST R 000's
	BAG	25	4 BAG	1[illegible]	2[illegible]	5/BAG	1[illegible]
	LINER	-	-	-	2[illegible]	1.5 LINER	-
	MISC	-	-	-			[illegible]
	TOTAL PACKAGING			1[illegible]			52[illegible]
5.0	REPAIRS MAINTENANCE			1			[illegible]
6.0	DEPRECIATION						
	BUILDING 5			4			51
	EQUIPMENT 1[illegible]			145			[illegible]
7	FINANCIAL EXPENSES						
	INTEREST ON CAPITAL 1			2[illegible]4			40[illegible]
	INTEREST ON WORKING CAP 15			118[illegible]			[illegible]
8	TOTAL COST			[illegible]			[illegible]
	PR [illegible]			[illegible]			[illegible]
	RS 8 [illegible]			[illegible]			[illegible] 67
	RS [illegible] INGREDIENTS			[illegible]			1[illegible]

[illegible] 85 HARPSTAB

BEST AVAILABLE COPY