PN-ABM-903

A SEMINAR IN TELECOMMUNICATIONS POLICY AND REGULATION

Presented by

Dale N. Hatfield
James H. Alleman
Robert R. Bruce

On Behalf of the U.S. Department of State
Bureau of International Communications and
Information Policy

with the support of

U.S. Agency for International Development

September, 1991

TABLE OF CONTENTS

Outline of Seminar v

Introduction vii

Module I: Elements of a Modern Telecommunications Infrastructure 1

Module I: Summary Paper 3

Module I: Slides With Notes 21

Module II: Economic Policy and Regulatory Framework 77

Module II: Summary Paper 79

Module II: Slides With Notes 85

Module III: Legal Framework and Rules 155

Module III: Summary Paper 157

Module III: Overview of Presentation 187

Module III: Slides 207

OUTLINE OF SEMINAR

- Introduction

- Module I - Hatfield

  Elements of a Modern Telecommunications Infrastructure

- Module II - Alleman

  Economic Policy and Regulatory Framework

- Module III - Bruce

  Legal Framework and Rules

Source: HAI

INTRODUCTION

- Purpose of Seminar

- Introduction of Presenters:

  Dale N. Hatfield

  James H. Alleman

  Robert R. Bruce

Source: HAI

MODULE I

Elements of a Modern Telecommunications Infrastructure

ELEMENTS OF A MODERN TELECOMMUNICATIONS INFRASTRUCTURE

Dale N. Hatfield
Hatfield Associates, Inc.

Background Notes Prepared for
a Series of Seminars on
Telecommunications Policy and Regulation
Sponsored by the U.S. Department of State

September 12, 1991
Revised December 1991

 Previous Page Blank

I. Introduction

This paper is intended to accompany the outline on Elements of a Modern Telecommunications Infrastructure prepared for A Seminar in Telecommunications Policy and Regulation sponsored by the U.S. Department of State with the support of the U.S. Agency for International Development. The purpose of this paper and the corresponding portion of the seminar, is to (1) provide a technical framework for the balance of the presentations, (2) arrive at some common terminology for the technology involved and (3) illustrate some specific issues of public policy that are raised by past and future technological changes. With regard to the latter point, the primary purpose is not to focus on some of the larger policy issues associated with privatization and the regulatory processes, but rather to focus on more narrow issues that are raised by technological and marketplace changes.

It should also be emphasized, by way of introduction, that this portion of the seminar is not intended as an engineering course or briefing. Rather, the intent is to discuss the types of technologies and services that are necessary to support a modern economy and to relate them to the policy and regulatory issues that must be addressed.

This paper follows the same general outline used in the presentation itself. It is divided into six sections. Section II, which follows, discusses the basic elements of a telecommunications network from a generic point of view. Section III, then, discusses the elements of a modern public telephone network, while Section IV reviews the elements of a modern public data network. Section V discusses cable television systems. The next section, Section VI, discusses some major underlying technological trends, and Section VII takes note of certain other technologies that can play an important role in the modern telecommunications infrastructure. Related policy issues are illustrated in each section.

II. Basic Network Elements (Generic)

The basic elements of any telecommunications network consist of a source where the information resides or is generated and an information sink where it is consumed or delivered. The source(s) and sink(s) are connected together by links and nodes.

The transmission links transport the information and the nodes switch the information from one link to another on the way from the source to the sink. The routing that takes place at the node can involve circuit switching, message switching, packet switching, or permanent (or relatively permanent) connections. With unswitched or dedicated connections, the communications capacity (bandwidth) is available full time, and there are no delays (beyond normal propagation delays) in transitting the network. These dedicated connections may be referred to as private lines when provided to an

end user. Of course, the links themselves can be carried on a variety of different transmission media including fiber optic cable, satellites, coaxial cable, or twisted-pair (copper) cable. The elements or modules of a network can be arranged in different ways leading to different network topologies and architectures.

III. Elements of a Public Telephone Network

A public switched telephone network can be divided into four parts: the customer premises equipment/inside wiring portion, the local distribution portion, the metropolitan area or regional network portion, and the intercity or long haul portion. These different portions represent somewhat natural divisions in terms of their economic and technical characteristics and the differences are significant from a public policy standpoint because different policies may be appropriate for the different portions.

The customer premises equipment (CPE) and inside wiring portion of the network can range from a basic telephone and simple inside wiring in a residential setting to a large private branch exchange (PBX) switch with extensive cabling and highly featured telephone sets in a business or government setting.

Two basic public policy issues arise in conjunction with the provision of CPE/inside wiring. These two sets of issues are:

1. Whether CPE/inside wiring should be provided on a monopoly or competitive basis and, if the latter, under what terms and conditions.

2. Whether entrepreneurs (i.e., third parties not necessarily affiliated with the telephone operator or TO) should be allowed to provide PBX-based services on a profit-making basis and, if so, under what terms and conditions.

With regard to issue one, the clear trend throughout much of the world is to allow for the free market, competitive supply of CPE/inside wiring. Issue two raises questions surrounding what is sometimes referred to as the provision of shared tenant services. In providing shared tenant services, an entrepreneur acquires a PBX and provides services to an apartment building or apartment complex, to an office building or office complex, and/or to a collection of individual residences in a development. In the most basic form, the providers use their PBXs (and associated "inside wiring") to switch calls among their customers and to provide them with access to the telephone network for both local and long distance calling.

By making the investment in a PBX and associated inside wiring, the shared tenant service provider reduces the investment required by the telephone operator in two fundamental ways. First, the franchisee's handling of calls among his or her customers would

reduce the switching load on the TO's Central Office. Second, because it is very unlikely that all of the franchisee's customers will want to make calls into the TO-provided portion of the network simultaneously, the number of lines (trunks) between the customers and the Central Office can be reduced.

As discussed in later parts of the seminar, it may be possible to expand the shared tenant service concept to help encourage private sector investment and more rapidly increase telephone penetration while allowing the TO to concentrate its attention on the backbone or basic network. If this is pursued, it is important that the prices for interconnection with the TO operated portion of the network be set correctly to encourage efficient investments.

The local loop or access portion of a public switched telephone network consists of three segments. The first, the feeder portion, runs between the Central Office and an interconnection point (sometimes referred to as the Feeder-Distribution Interface or FDI point) in a particular part of the local exchange area served by the Central Office. Typically, the feeder portion of the network consists of a collection of twisted-pair copper wires within a large cable. These cables, which emanate from the Central Office, usually run along major streets and thoroughfares.

The second segment, the distribution portion, consists of smaller cables which connect to the feeder at the FDI, run down side streets and alleys, and terminate in locations (e.g., a pedestal) near the individual subscribers. The final connection to the subscriber is made with twisted pair cables called drops or service wires. The drops or service wires are terminated on the customer's premises at a Network Interface (NI) or Demarcation Point. Thus there are four "natural" interface points within the loop -- at the Central Office, the Feeder Distribution Interface Point, the Pedestal, and the Network Interface.

Under certain circumstances, if the number of individual circuits and/or distances justify it, multiplexing systems are used to reduce the number of physical pairs required in the feeder portion of the loop. Such multiplexing systems are often referred to as "pair-gain" systems. The associated electronic equipment located in the outside plant is called a Remote Terminal (RT) and the corresponding equipment in the Central Office is called the Central Office Terminal. In some situations, optical fiber transmission systems are used in the feeder portion of the loop instead of -- or in conjunction with -- pair-gain systems. An all-fiber feeder may be used, for example, to serve a large office building or factory which requires a large number of individual circuits or broadband digital facilities. Fiber in the feeder portion of the loop is also used to serve areas very distant from the Central Office. In these cases, pair gain systems may also be used beyond the hub to reach an RT nearer the subscribers.

To the extent that the public switched telephone network exhibits natural monopoly characteristics, it probably stems from the local loop or access portion of the network. (The term natural monopoly and its implications for public policy are discussed in a later portion of the seminar.) Despite the possibility of natural monopoly characteristics, it may be possible to allow entrepreneurs (such as the shared tenant service providers mentioned above) to construct a portion of the local loop plant.

The metropolitan or regional portion of the network consists of the COs, the interoffice trunks for connecting them, and, if justified on economic grounds, one or more tandem switches for routing calls between COs within the area. A tandem switch may also be used to route traffic to and from the long haul or inter-city portion of the network. In a modern telephone network, the interoffice trunks are typically fiber optic based except in less densely populated areas where microwave transmission systems may be employed.

In the U.S., the place or switch at which the long haul carrier receives traffic from -- or delivers traffic to -- the local carrier is called the carrier's point-of-presence (POP). The divestiture of the local Bell Operating Companies from AT&T split the local/metropolitan portion of the network from the long haul portion of the network on the local exchange side of the POP. With some exceptions, all local exchange carriers are required to provide access to and from the local network for competing long haul carriers on a non-discriminatory, equal access basis. In the U.S., competition is also emerging to provide the links from the POPs to large customers and directly to the Central Office switches operating by the local exchange carriers.

Thus, some of the basic policy issues involved are whether competition should be allowed in the provision of long haul services and/or in local exchange services and, if not the latter, where the boundary between monopoly local and competitive long haul services should be drawn. It is probably safe to conclude that competitive pressures will arise in the long haul portion of the network first because economies of scale may not be as great and because those competitive pressures will grow downward toward the CO as traffic volumes increase.

Before addressing the elements of public data network, it is useful to address the basic advantages and disadvantages of the circuit switching that is traditionally employed in the public switched telephone network. In circuit switching, once the call is set up, it appears to the end user like there is a "pair of wires" directly connecting the two conversing parties together. Thus, there is negligible transmission delay once the call is set up, and this is a major advantage of circuit switching. On the other hand, with traditional circuit switching, only a fixed increment of bandwidth or capacity is available and the channel is not effi-

ciently used when the traffic is "bursty" as it often is when it is coming from a computer terminal. Also, the whole process of setting up a call incurs a significant amount of time and overhead that is especially troublesome when only short messages need to be sent as in certain telemetry applications.

IV. Public Data Networks

Data networks also consist of the same general elements discussed above -- i.e., a portion on the customers' premises, an access portion, a metropolitan or regional area portion, and a long haul portion. Within a building or campus-like environment, data communications is often carried on a local area network (LAN). There are numerous types of LANs, and it is beyond the scope of this paper and the seminar to discuss the different types in detail. LANs can be used for the interconnection of personal computers, for the sharing of printers or other peripherals, to provide access to minicomputers or mainframes, and to provide higher level services such as electronic mail and work group scheduling.

One common type of LAN is called a token ring. As the name suggests, in a token ring, the nodes are attached to a common transmission media with the nodes in turn connected by links organized in a ring configuration. In the token ring network, like other LANs, the information is carried from node to node in individually addressed packets or frames. The transmission media itself can be coaxial cable, fiber optic cable, or twisted-pair cable. In a token ring network, a special packet called a token constantly circulates around the ring from node to node. If the token is marked "free," a node that receives it is allowed to transmit its message or a portion of its message. When a node wants to transmit, it waits for a free token, marks the token busy, and attaches the addressed packet or frame of information which then moves around the ring from node to node until it arrives back where it started. Along the way, each node reads the address and pulls off and processes any packet addressed to it. When the packet arrives back at the originating node, the information packet is removed, the token is marked idle, and the token continues to circulate around the ring indicating the network is idle and is available for use by another node.

Since LANs initially were used primarily to link computers located on a customer's premises, and since they did not proliferate until after the introduction of competition and deregulation of CPE, they have not historically been regulated in the U.S. Policy and regulatory issues associated with LANs include whether or not they should be supplied on a competitive/deregulated basis. As LANs proliferated, there was an increased need to link them with private (dedicated) lines. Specialized nodes on the LAN were used to interconnect them. As the number of LANs increased still further and as the speeds at which they operated went up, local and

long-haul carriers came under increased pressure to provide switched, high speed, low delay (low latency), services to interconnect them on an "as needed" basis. Generally speaking, these requirements go beyond the traditional packet switching discussed in the paragraph which follows.

Interconnecting computers, terminals, and other data-oriented devices over a wider area can also be accomplished using the public switched telephone network which was described above. If the network (or, even more likely, the access line) is analog rather than digital, then a modem is required. However, using the public switched telephone network for carrying is inefficient and often error prone. Because it is based upon circuit switching, it is not efficient for the handling of bursty data even if it is an all-digital network. In packet switching, in contrast, the bursty information is divided up into collections of bits (packets). These packets are individually addressed and move through the network from node to node in a store and forward fashion. Errors in transmission are detected and corrected on each link so that only error-free packets are delivered.

The links in the network thus carry interleaved packets from different users, thereby increasing the utilization of the lines. Note that when a terminal is not sending information, it does not consume network capacity (except, perhaps, on the access link). In addition to efficient channel utilization (compared to circuit switching) and error control within the network, packet switching also has the advantages of fast call set up time, high availability because of the distributed routing/alternative routes, efficient handling of terminals and other devices that operate at different speeds, and delay but not "blocking" of messages.

The disadvantages of packet switching include delay, since there is no real time connection as in the case of circuit switching and, typically, slow speeds. The low speed results, in part, from the processing (e.g., error correcting) that must occur at each node. Traditional packet switching is not suitable for voice because of the absolute delays and the unpredictability of that delay (jitter).

Public policy issues associated with public packet networks include whether they should be provided on a competitive basis and whether or not they should be regulated. If regulation is placed on the public data network offering, there are very difficult issues as to how to separate regulated communications offerings from data processing or other "enhanced" services that may depend upon or be combined with communications services. As circuit switched digital service offerings expand, there is also the issue of whether regulation should be limited to packet switched data as opposed to circuit switched data. This becomes an issue with circuit switched data because it may be impossible for the regu-

lator to know whether voice or data is being transmitted via the circuit switched digital service.

V. Cable Television Networks

Cable television networks are often times not considered a part of a country's telecommunications infrastructure, since they are usually employed to distribute broadcast programming over a rather limited geographic area and are not well configured to carry two-way voice and data traffic. However, networks are being proposed and gradually put into service which provide voice, data, image and video traffic on an integrated basis. Thus, there is some blurring of the distinctions between networks used for the mass media and networks used for telecommunications. These integrated networks will be discussed in a little more detail in a subsequent section.

A traditional cable television network utilizes coaxial cable as the transmission media. The coaxial cable itself has a relatively large bandwidth (about 1 GHz), but it is subject to relatively high attenuation (loss). The network is laid out in a tree-and-branch topology. The television signals from various sources (e.g., from over-the-air broadcasts, satellite transmissions, or via microwave radio from other locations) are collected at the headend and then fed into the coaxial cable network. The capacity of the cable is divided into channels on a frequency division multiplexed basis. Note that the frequencies used inside the cable are the same as those used for a host of over-the-air services, but the coaxial cable confines the internal signals and prevents the external signals from causing interference to them.

Because the signals get weaker due to the losses in the cable, the broadband set of channels must be boosted or amplified at regular intervals. It is the noise and distortion that is produced by these analog amplifiers that limits the capacity of the cable television network -- not the cable itself. Note also that in a cable television system using a tree and branch architecture, the same set of signals is available everywhere in the system. Therefore adding a subscriber is simply a matter of tapping into the cable; there is no need to run a separate new path to the headend. The only switching that occurs takes place at the subscriber's television set or convertor. The network itself is not switched.

The advantages of the cable television network architecture include its efficiency in delivery of different copies of identical signals on a "one-to-many" or broadcast basis, plus the ease of adding subscribers mentioned above. The disadvantages of the architecture include a lack of security stemming from the fact that all signals are available everywhere and an "upstream" or return path noise build-up problem that limits its usefulness for two-way, one-to-one services.

As a mass media or broadcast-like service, cable television raises the same host of issues that are often associated with broadcasting. The relevant issues associated with the telecommunications area, however, are those that involve the inter-relationship between cable television services and public telecommunications services. In particular, should telephone operators be allowed to provide cable services (and, if so, to what extent and under what terms and conditions), and should cable television operators be allowed to provide telecommunications (i.e., non-entertainment) services.

VI. Underlying Technological Trends

In Sections II through V, the basic technologies associated with public switched telephone networks, public data networks, and cable television networks were briefly reviewed. The purpose of this section of the paper is to describe some of the underlying technological trends that are impacting on these networks and to comment on some of the policy issues that are generated as a result.

A. Conversion to All Digital Networks

One of the most fundamental and all-encompassing trends in telecommunications is the movement toward all digital networks. The trend toward systems employing both digital switching and digital transmission is propelled by a host of advantages associated with digital systems and the development and refinement of supporting technologies. In a digital system, of course, the analog signals are converted to digital signals for transmission/switching. The principal advantage of digital transmission systems is that the signal is regenerated along the transmission path rather than amplified as is the case of analog transmission. By careful system design, the digital signal received at the information sink can be identical to the one produced at the source.

According to a standard textbook in the area (Bellamy), the other advantages of digital systems include ease of multiplexing, ease of encryption, ease of signaling, use of modern (i.e., digital "chip") technology, ease of performance monitoring, operability at low signal-to-noise or signal-to-interference ratios, economies associated with integration of switching and transmission, and ease of accommodating diverse services.

At one time, the principal disadvantage of digital systems was that they required more bandwidth than corresponding analog systems. However, with recent advances in signal processing and associated devices, and by utilizing "higher-level" (i.e., more complex) modulation it is now feasible to reduce the required bandwidth sufficiently to overcome this disadvantage. Accordingly, modern public and private networks use digital techniques in all

but the subscriber access portion of the network and, as will be discussed later, the use of digital techniques (e.g., digital multiplexing) is spreading into the distribution portion of the network as well.

A key policy issue associated with the conversion to all digital public networks is the rate at which the conversion is made. This decision may be particularly difficult where recently installed, well-maintained analog systems are providing adequate voice services, and the introduction of digital systems cannot be justified based upon cost reductions. The problem is further exacerbated by the perception -- if not the fact -- that digital upgrades tend to benefit business users more than they do residential users, creating tensions between the two user groups. This issue is currently a fairly contentious one in the U.S. and in developing countries as well. More specifically, there is sharp debate over whether digital-based services should be provided on an overlay basis, on a replacement basis, or by some combination of the two. As mentioned earlier, when all signals -- voice, data, image, and video -- are encoding into a digital bitstream, it makes it difficult to differentiate among different services for regulatory or pricing purposes.

B. Separation of Signaling from Transport

From a logical perspective, the public switched telephone network consists of two sub-networks -- one devoted to actually carrying the conversation or user information from one point to another, and one devoted to carrying the signaling associated with setting up and taking down individual calls and performing other related functions. Traditionally, the signaling information was carried on the same trunks (transmission circuits) as the user information (per trunk signaling) which created a number of speed and other limitations. In modern telephone networks, both local and long haul, the signaling information is being separated from the individual trunks and carried on a separate signaling network that is used in common. This separate signaling network operates like the packet switched network described earlier. There are a host of advantages to this arrangement, which is referred to as common channel signaling. These include faster call set up times and the ability to offer advanced services, especially when computer processing power is used in conjunction with the signaling network to create a so-called intelligent network as described later. Some of the policy issues associated with the conversion to common channel signaling are discussed in later subsections in conjunction with other developments.

C. Switch Software Unbundling

Modern stored program controlled digital switches are composed of two parts. The switching matrix where the actual connections are made between incoming and outgoing lines and processors and the

associated data storage devices which actually control the switching operations. In early versions of stored program controlled switches, the various parts of the switch were so tightly coupled that a whole new software program had to be introduced in order to create even a simple new service. The trend today, however, is to separate the service creation or application level software from the lower level software and hardware functions that are associated with controlling the actual switching matrix. This separation has a number of advantages including faster service creation and lessening the dependence of the TO on the equipment manufacturer.

This development is occurring in both PBXs used in private networks and in the switches used in the public switched telephone network. By interfacing the PBX, for example, with a regular computer system, greatly increased functionality can be created. For example, in a brokerage business, the switch can send the calling number identification (which can be readily made available with common channel signaling) to the attached processor. The attached processor can look up the number in a data base and ascertain which customer is calling. It can then call up information on the customer from the data base and display it for the agent at the same time it is instructing the switch to route the call to the agent. This marriage of computers and switches in the PBX arena is one of the hottest areas of development in the U.S. It is putting pressure on carriers to offer similar services employing their own switches, and to provide the signaling and other information necessary for private users to do similar things themselves.

When accomplished in the public switched telephone network, these types of services tend to further blur the distinctions between communications and data processing services with all of the attendant policy and regulatory issues associated with such blurring. There are also issues of privacy that are raised in conjunction with the use of the calling number, and these are currently being hotly debated in the U.S. Finally, all of the issues associated with preventing the local carrier from using its monopoly power to cross subsidize and discriminate in favor of its own integrated services remain.

D. Private Digital Networks

Operators of private networks have combined digital PBXs, digital multiplexing equipment, digital access and cross-connect equipment, and related equipment to create all-digital networks using digital private line services obtained from carriers. These modern digital networks carry voice, data, image, and video teleconferencing traffic and serve the specialized needs of many businesses.

Policy and regulatory issues surrounding private networks include balancing the possible loss of revenues from public networks with the need to allow private companies to create

efficient and effective networks to meet their own needs. Other issues include the pricing of private line facilities necessary to create such networks, the price and other terms and conditions associated with accessing the public switched networks from the private networks, and the utilization of non-carrier provided transmission facilities (e.g., private microwave systems).

E. Integrated Services Digital Network

As noted briefly earlier, digital transmission and switching facilities are clearly the technology of choice except in the subscriber access portion of the network. Telephone companies on a worldwide basis, however, are moving in the direction of upgrading local loop and switching facilities to permit the offering of digital services directly to the premises. The collective name for these developments is the Integrated Services Digital Network, and it provides for multiple conversation or information channels to the home or office as well as a common channel suitable for both signaling and customer data. Without ISDN, it is not unusual to find that a large customer may be subscribing to multiple services, each with different loops, interfaces, signaling protocols, operating and maintenance procedures and so forth. ISDN standards provide for a common interface, common operating procedures/protocols, etc., so that ISDN compatible devices can easily be "plugged in" to the network and efficiently share facilities. It also allows capacity to be added without requiring a visit to the customer locations.

Although a substantial amount of effort has gone into the development of ISDN, services have been slow to develop due, in part, to its being technology driven, not market driven. The policy issues associated with ISDN are similar to some of the issues identified earlier, namely, how fast should it be deployed and who should pay for the deployment if the primary beneficiaries are businesses and other large institutions?

F. The Intelligent Network Concept

The intelligent network concept is a natural extension of the advances in switching and in signaling discussed earlier. In the intelligent network concept, computer processors and associated data bases are placed in the network where they can be accessed from the signaling channel. In a typical application, calls are briefly suspended after the called number has been dialed and the calling and called number are forwarded via the common channel signaling network to the processor. The processor and associated data base are programmed to take different actions depending upon the two numbers. For example, if the number dialed is a ten-digit number beginning with 800, the call can be routed on a toll free basis to a particular number on the network. In other words, the processor translates the number. More sophisticated services allow the forwarding decision to be changed based upon where the call

originates, the time-of-day, or information entered by the caller after the original number is dialed.

The intelligent network can be used as the basis for personal number calling wherein the network keeps track of the location of the subscriber and routes the call not to a fixed location, but to a portable telephone carried by the subscriber or to a selected telephone on the fixed network. Intelligent networks are also important because they allow the public carrier to create virtual or software defined networks that recreate many of the features of a private network. Policy issues include the familiar problems of dealing with the boundary between communications and data processing, privacy, and a host of interconnection and interface questions.

G. Telephone Company Fiber-in-the-Loop

Another major trend is in the direction of introducing fiber optic systems into the local loop as both a cost saving strategy and to increase the bandwidth available. Currently, in the U.S. at least, it is conceded that fiber can only be cost justified in the feeder portion of the access network. The balance of the distance to the subscriber is composed of traditional twisted-pair cables. There are intense efforts underway to decrease the costs of the technology so that the fiber can be extended to the pedestal or curb. The ultimate goal is fiber-to-the-home. In the meantime, in the U.S., large buildings, office complexes, etc. are often directly served by fiber facilities. Fiber-to-the-home would allow telephone companies to offer cable television services in competition with the local cable company and this raises a host of issues as noted earlier.

H. Open Network Architecture

In the U.S., the Open Network Architecture (ONA) concept is being driven by three factors: (1) the regulators' desire to ensure that the local exchange telephone companies do not use their monopoly power to discriminate in favor of their enhanced services that depend upon that monopoly, (2) the regulators' desire to encourage the development of enhanced services that utilize the local exchange network, and (3) the telephone companies' desire to decrease there dependence upon switch vendors for new software and new services. The basic concept behind ONA is fairly straightforward: it calls for the telephone company to provide interconnection to their basic network to competitive suppliers of enhanced (e.g., information) services in a manner that is comparably efficient both technically and economically to the way they provide interconnection to their own enhanced service operations.

For example, if the telephone company provides a "stutter dialtone" to warn its own voice messaging subscribers that they have a message waiting and charges one cent each time the feature

is invoked, then they must do the same for a competitive supplier of voice messaging service. Likewise the quality of the connection between the switch and the voice messaging machines must be comparable whether the connection is internal or external to the network. The U.S. concept of ONA also requires the telephone companies to unbundle their basic networks into basic building blocks to enable competitors (and their own enhanced service operations) to pick and choose among the elements on an "a la carte" basis.

I. Cable Television System Deployment of Fiber

Cable television companies are also deploying fiber in their networks. Typically, this involves running fiber out to a point near the subscriber and continuing the balance of the distance using conventional coaxial facilities. By reducing the number of analog amplifiers between the headend and the subscriber, numerous advantages accrue to the cable company. There is less noise and distortion produced because of the reduction in the number of amplifiers, greater bandwidths can be achieved because there are fewer amplifiers, reliability is improved because there are fewer amplifiers in the cascade between the headend and the subscriber, and special programming can be provided on a more selective basis. The architecture produced by introducing fiber in this manner also lends itself much better to the provision of two-way services, and many cable operators in the U.S. are taking advantage of this by testing various telecommunications markets. Hence, just as telephone company provision of cable services raises certain policy issues, so does cable provision of telecommunications services.

J. Advances in Multiplexing

Multiplexing involves the combining of more than one conversation or signal or a common transmission facility such as a radio transmitter or a lightwave in a fiber optic system. While multiplexing increases the cost of the electronic equipment used at each end of a link, it can decrease the total cost by eliminating the need to construct separate facilities for each of the independent signals. The tradeoff must be made on a case-by-case basis.

In the digital world, a common way of multiplexing is called time division multiplexing (TDM). In the traditional form of TDM, the total capacity of the channel in terms of bandwidth is divided up into fixed length time slots which are then shared on a rotating basis by multiple input signals. In TDM, there is a fixed relationship between a particular input signal and a particular time slot in the repeated group (frame) of such time slots. While this form of multiplexing can be much more efficient than providing separate facilities for each input channel, it is rigid in terms of the increments of capacity that can be provided, and capacity is wasted if there is no activity on a particular input channel

because, for example, a user is not speaking or a terminal is not sending characters at the moment.

More advanced multiplexing schemes are based upon packetizing the information and individually identifying the packets as described earlier. In this manner, variable capacity services can be provided, since it is a relatively straightforward procedure to simply use more of the available time on the channel for a particular input. It also allows more efficient use of the channel since inactive sources do not consume capacity. By taking advantage of the superior quality of fiber optic facilities and moving error detection/correction out of the network, and by taking other steps to increase the speed at which packets are handled within the network, the delay through the network can be reduced to the point where it is acceptable for voice transmission. This may eventually make it feasible to handle voice, data, and image traffic efficiently on a common network.

Once again, this development tends to blur the line between voice and data transmission, and, when utilized in conjunction with digital compression techniques, intensifies the competitiveness of private networks which may employ such technology from the "edges" of the network.

K. Advances in Digital Signal Compression

Not only are technologists developing transmission systems with broader bandwidth and more efficient multiplexing schemes, they are also finding ways to decrease the number of bits that must be sent to convey a voice conversation or a television picture. These methods are referred to as compression techniques, and are made possible by rapid advances in digital signal processors and more efficient algorithms (processes). When employed, they have the effect of significantly increasing the capacity of a transmission facility and, hence, accelerate the trend toward digital systems.

L. Metropolitan Area Networks

Traditionally, local exchange networks have been organized in hierarchical fashion with the Central Office connected in a star-like configuration to a tandem switching office. Likewise, customers have been connected to the Central Office by local loops arranged as a star. The problem with a star network in either the interoffice or loop part of the network is that there is only one way to get from the customer to the Central Office or from the Central Office to the tandem switch and/or the long-haul network. With the increased amount of traffic that is being carried on single links due to the deployment of fiber optic systems, and the increased criticality of the information being carried, telephone companies are showing interest in ring-type topologies which can

automatically provide an alternative route in the event of a failure.

Because certain customers, e.g. large financial institutions, are so dependent upon their communications facilities, telephone companies must adopt appropriate strategies to reduce outages and this has produced increased interest in what are called self-healing rings by both the carriers and their customers. Also, the circuit switched network or dedicated private lines may not be an efficient way of interconnecting multiple LANs in a metropolitan area, and the rings can be used effectively for that purpose as well.

M. Broadband Switching

The rapid advances in broadband transmission systems have tended to outstrip the ability to switch very high-speed bit streams. The ultimate objective, of course, is to handle even very high-speed information within a common switch in order to offer an integrated broadband network. Thus voice, data, image and video traffic would be carried and switched on an integrated basis, and the capacity would even be extended to individual residences through the deployment of fiber in the loop. As before, this raises numerous policy issues concerning the provision of television services on telephone facilities, the speed at which such technology should be deployed, and the role of the alternative carriers in providing broadband services.

N. Wireless Access

While there has been much discussion about broadband fiber to the home over the last few years, more recently there has been increased interest expressed in the possibility of using radio or wireless means to provide narrowband access to the local network. The public's interest in wireless communications is demonstrated by the fact that, in the U.S., over 30 million cordless telephones are in use, and by the rapid growth in cellular mobile radio. One possible wireless configuration is to eliminate the distribution cable/drop portion of the local loop and substitute a telephone company provided radio port for accessing the feeder portion of the network. This configuration provides the advantage of portability to the customer, offsets the costs of an expensive portion of the network, eliminates the need for dedicated facilities to each home, and speeds service provision.

The use of radio technology even raises the possibility of competition with the local loop and, in the U.S. and elsewhere, entrepreneurs as well as cable television companies are also experimenting with providing wireless services. The possibility of wireless loops raises a large number of policy and regulatory issues, but also presents the possibility of rapid provision of service in countries with limited infrastructures. The policy

issues include spectrum allocation, interconnection, whether competition should be allowed and, if so, under what terms and conditions.

VII. Other Technological Developments Worth Noting

Although the focus in this paper has been on traditional public voice and data networks and cable television systems, there are a host of other technologies that have an important role to play in a modern telecommunications infrastructure. These include Very Small Aperture Terminal (VSAT) satellite networks, "wireless cable" systems which utilize microwave transmissions instead of coaxial cable, trunked mobile radio systems for providing dispatch type communications, packet radio systems for certain data applications, cellular mobile radio systems, personal communications services/networks (PCS/PCNs), and wireless PBXs and LANs.

MODULE I

Elements of a Modern Telecommunications Infrastructure

Purpose:

1. Provide the technical framework for the remainder of the seminar
2. Arrive at some common terminology for the technology involved
3. Illustrate some policy issues raised by past and future technological developments

Source: HAI

Previous Page Blank

OUTLINE OF MODULE I

Elements of a Modern Telecommunications Infrastructure

A. Basic Network Elements

B. Elements of a Public Telephone Network

C. Elements of a Public Data Network (Packet Switched)

D. Elements of Private Voice Data Network (Typical)

E. Elements of a Cable Television System

F. Underlying Technological Trends

G. Other Technologies Worth Noting

H. Critical Policy Issues from a Technological Perspective

Source: HAI

Basic Network Elements (Generic)

Source: HAI

Basic Network Elements
Links and Nodes

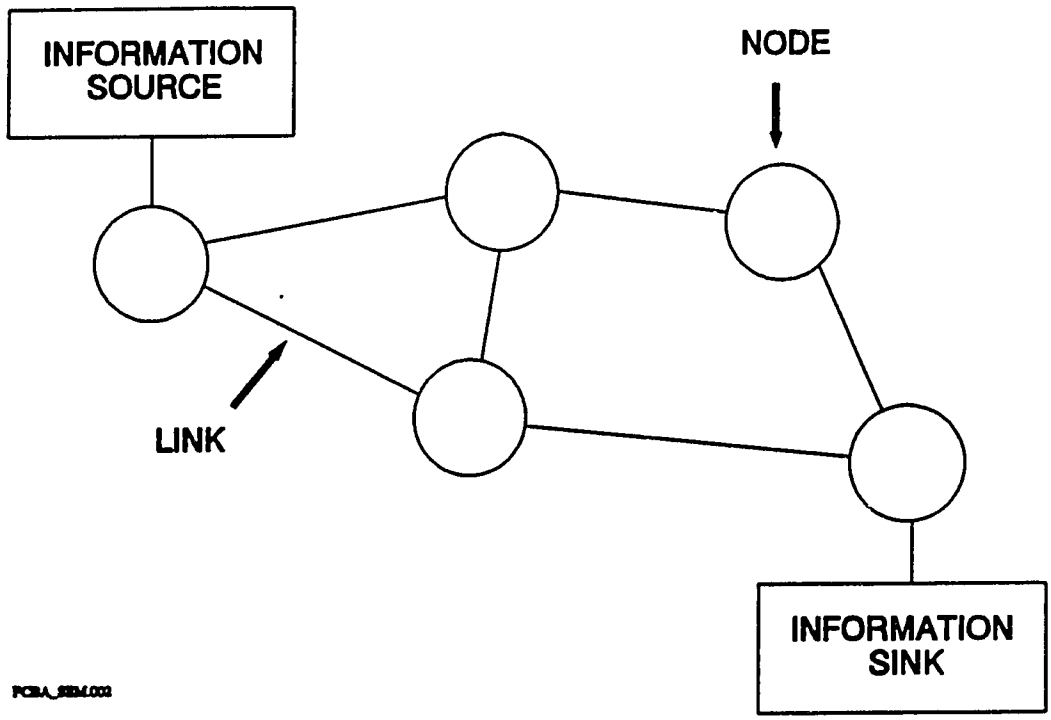

Basic Network Elements
Links and Nodes

1. Illustrates basic elements of a telecommunications network although analogous elements exists for transportation networks as well.

2. Basic elements include the information source where the information is generated or resides, the information sink where the information is consumed or delivered, the transmission links which carry the information from one point to another, and the nodes where the information being transported is routed or switched from one link to another on the way to the destination (the information sink).

3. The routing that takes place at the node can involve circuit switching, message switching, packet switching or relatively permanent connections (cross-connects).

4. The links can be of any variety of transmission media including fiber optic cable, satellites, coaxial cable, or twisted-pair (copper cable).

5. The elements that comprise a telecommunications network can be arranged in different ways leading to different network topologies or architectures.

Basic Network Elements
Dedicated Versus Switched Connections

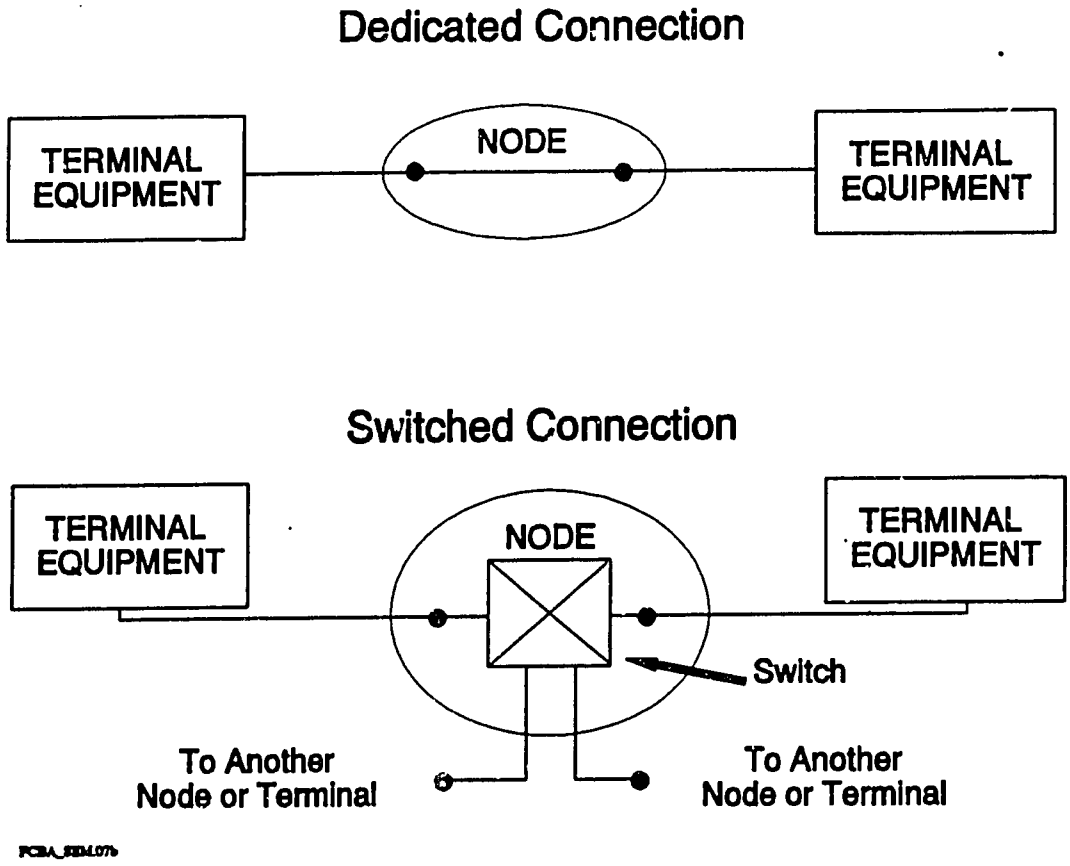

Basic Network Elements
Dedicated Versus Switched Connections

1. Similar to previous illustration except information source and information sink have been replaced with terminal equipment.

2. Illustrates dedicated (unswitched) versus switched connections.

3. With dedicated connection, the capacity (bandwidth) is available full time and there are no delays (beyond normal propagation delays) transitting the network.

4. Dedicated connections may be referred to as private lines.

Elements of a Public Telephone Network

Source: HAI

Previous Page Blank

Elements of a Public Switched Telephone Network
Overview

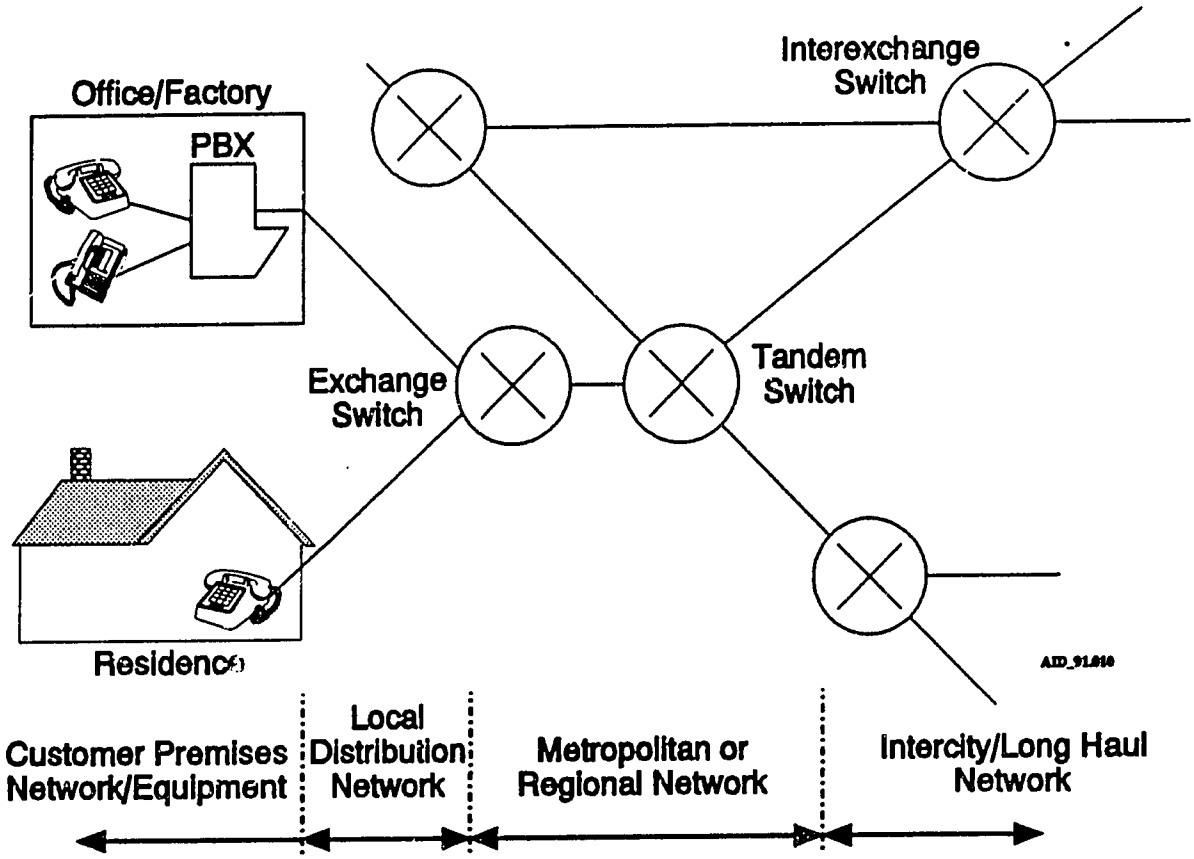

Elements of a Public Switched Telephone Network
Overview

1. Illustrates four portions of a public switched telephone network: customer premises network/equipment portion, local distribution portion, metropolitan area or regional network portion, and the intercity or long haul portion.

2. Somewhat natural divisions from a technical and economic standpoint.

3. Significant from a public policy standpoint because policies may be appropriate because of different economic/technical characteristics.

Elements of a Public Switched Telephone Network
Customer Premises Equipment and Inside Wiring

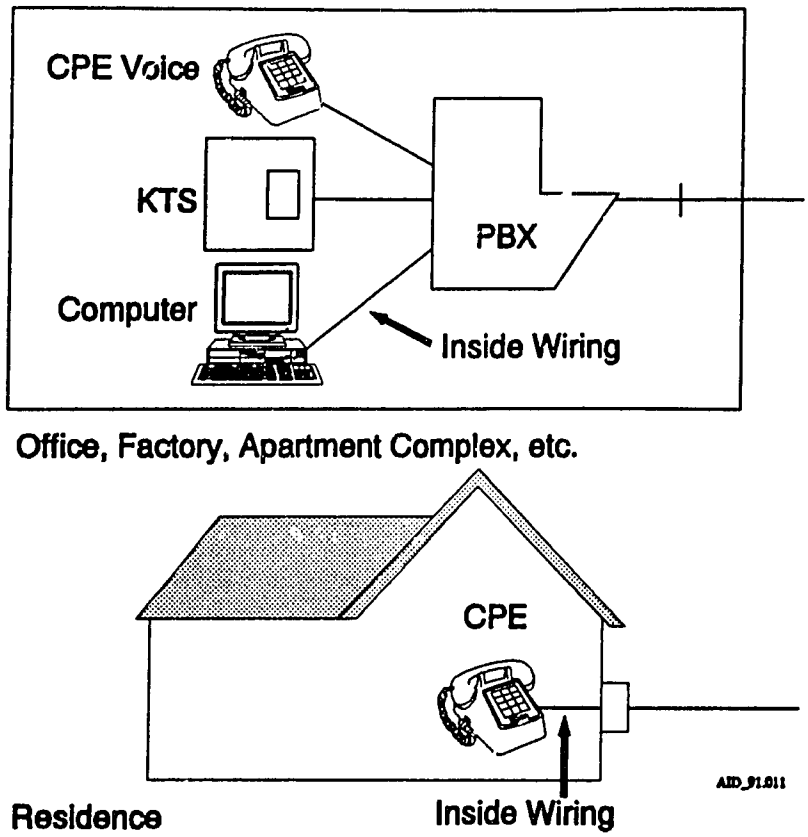

Elements of a Public Switched Telephone Network
Customer Premises Equipment and Inside Wiring

1. Illustrates customer premises equipment (CPE) and inside wiring portion of the network.

2. Can range from simple telephone and simple inside wiring in a residential setting to a large private branch exchange (PBX or PABX) switch with extensive cabling for inside wire and highly featured telephone sets in a business or government setting.

3. Raises two basic sets of public policy issues:

   a. Whether CPE/inside wiring should be provided on a monopoly or competitive basis and, if the latter, on what terms and conditions.

   b. Whether entrepeneurs (third parties) should be allowed to provide PBX-based services on a profit or not-for profit basis and, if so, under what terms and conditions.

4. Point 3.b raises the issues surrounding what are sometimes referred to as "shared tenant services;" such services may involve the resale of local and long distance services offered by telecommunications carriers.

Elements of a Public Switched Telephone Network
Local Loop/Access Portion

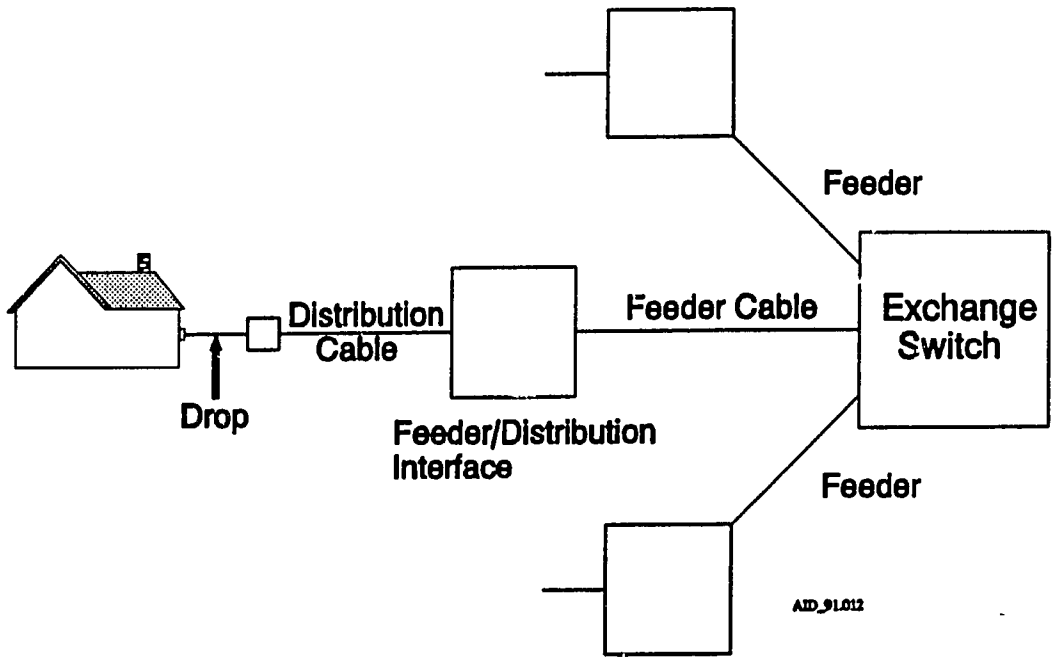

Elements of a Public Switched Telephone Network
Local Loop/Access Portion

1. Illustrates local distribution or access portion of the network (the portion between the customer and the central office).

2. Basic elements include the feeder cable, distribution cable, and the service wire or drop with interconnection between wire pairs possible at the feeder/distribution interface and at the pedestal.

3. To the extent that the public switched telephone network exhibits natural monopoly characteristics, it probably stems from the local loop or subscriber access portion of the network.

Elements of a Public Switched Telephone Network
Metropolitan or Regional Portion

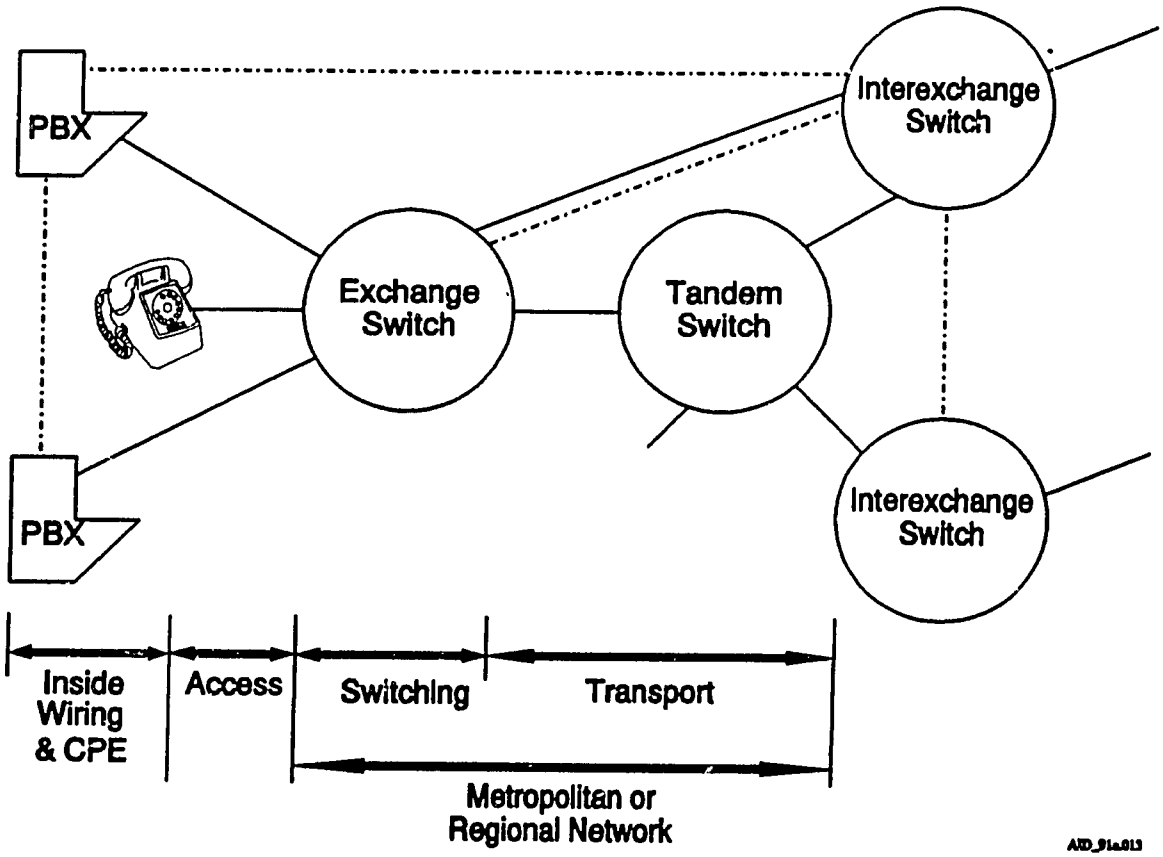

Elements of a Public Switched Telephone Network
Metropolitan or Regional Portion

1. Illustrates the metropolitan or regional portion of the network -- shown in the context of the access and interexchange portions.

2. Exchange switch used to make connections between subscribers and between subscribers and the long haul portion of the network.

3. In larger metropolitan areas, a second or tandem level of switching may be employed to route calls between exchanges in the area or between exchanges and the long haul portion of the network.

4. Note that the two interexchange switches shown may belong to different carriers if competition in long haul services is allowed.

Elements of a Public Switched Telephone Network
Metropolitan or Regional Portion (Cont'd)

5. In the U.S., the place at switch the long haul carrier receives traffic from or delivers traffic to the local carrier is called the carrier's point-of-presence or POP; divestiture split the network on the local exchange network side of the POP.

   Using U.S. terminology, the metropolitan network is composed of switching and transport as shown.

7. In the U.S., competition is emerging to provide the links shown with dotted lines; typically they utilize fiber optic systems to provide the dedicated links shown.

8. Public policy issues include whether or not competition should be allowed in local transport and, if so, under what terms and conditions (e.g. the terms and conditions of interconnection with the provider of local switching and access).

9. Even broader issue -- if you want to distinguish between local and long distance services for policy/regulatory purposes, where do you draw the line?

Elements of a Public Switched Telephone Network

Notes on Circuit Switching

- Advantages

  Negligible transmission delay once call is set up

- Disadvantages

  Only fixed increment of bandwidth available

  Inefficient channel utilization for "bursty" traffic

  High call set up overhead for short holding-time traffic

Source: HAI

Previous Page Blank

Elements of a Public Data Network

Source: HAI

Elements of a Public Data Network
Packet Switched Network

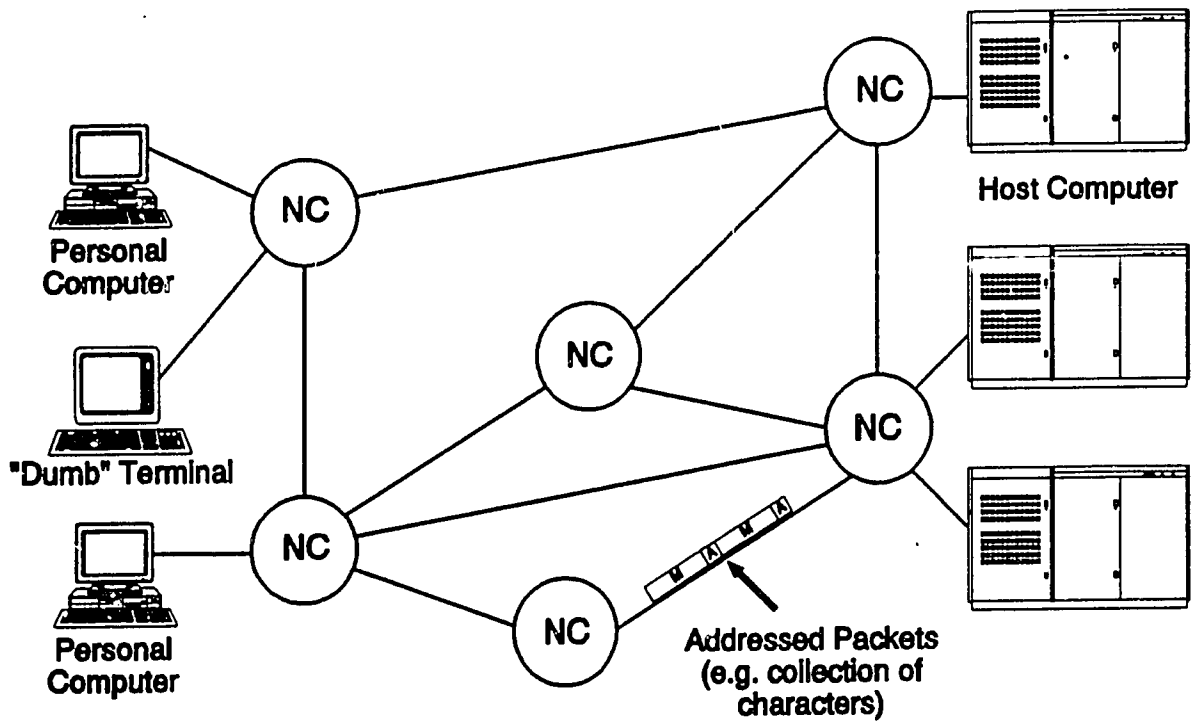

Elements of a Public Data Network
Packet Switched Network

1. Note that public data services can be provided on a circuit switched basis using the public switched telephone network; such use requires the use of modems if the network is not an all digital network.

2. Recall that handling "bursty" data traffic on a traditional circuit switched basis is inefficient regardless of whether the network is analog or digital.

3. In packet switching, the bursty information is divided up into collections of characters (packets); these packets of information are individually addressed and move through the network from node to node in a store and forward fashion.

4. The links in the network thus carry interleaved packets from different subscribers thereby increasing the utilization of the lines with other advantages as shown on the next slide.

Elements of a Public Data Network
Packet Switched Network (Cont'd)

5. Note that a terminal does not consume capacity if it is not sending information.

6. Public policy issues in public data networks include the following:

   a. Whether or not competition should be allowed in the provision of public data networks and services.

   b. Whether on not the competition, if allowed, should be limited to packet switched data as opposed to circuit switched data.

   c. If competition is allowed, the extent to which the services should be regulated.

Elements of a Public Data Network

Notes on Packet Switching

Advantages and Disadvantages of Packet Switching

- Advantages
  - Efficient Channel Utilization
  - Fast Call Set Up Time
  - High Availability Because of Distributed Routing/Alternative Routes
  - Efficient Handling of Different Speeds
  - Delay But "No Busy Signal"
  - Error Control in Network
- Disadvantages
  - Delay - No "Real Time" Connection
  - Typically Low Speeds

Source: HAI

Previous Page Blank

Elements of a Public Data Network
Local Area Network

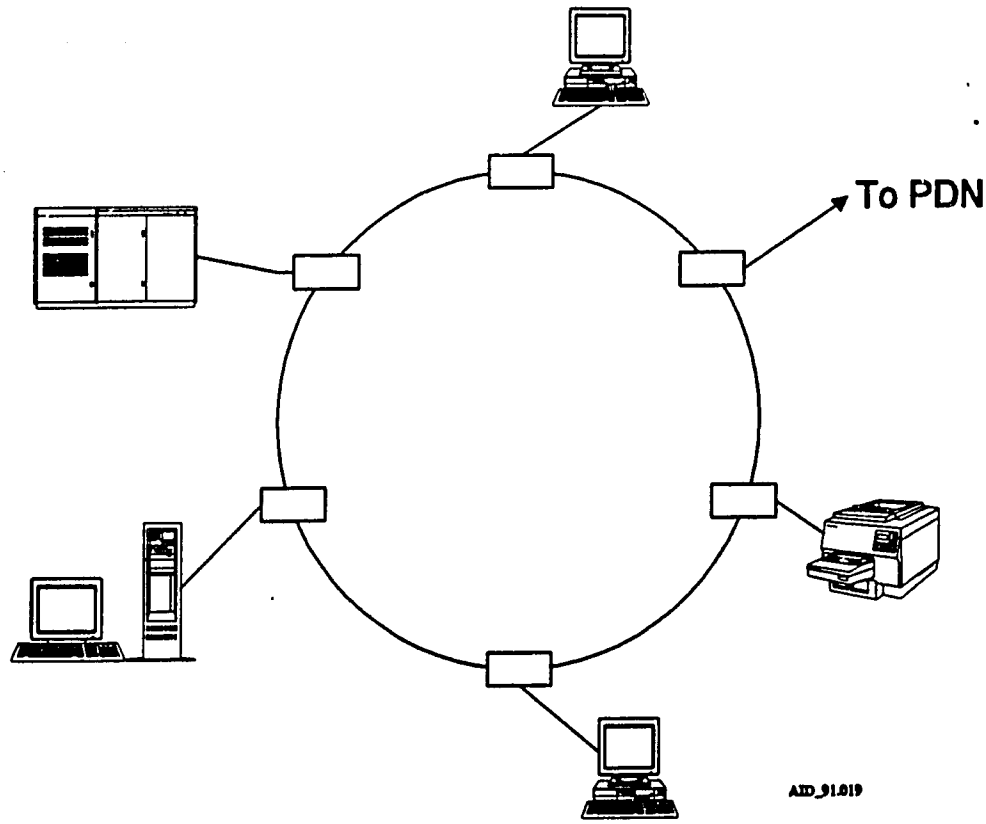

Elements of a Public Data Network
Local Area Network

1. Within a building or campus-like environment, data communications is often carried on a local area network (LAN).

2. Two common types of LANs are Ethernets and Token Rings; a token ring network is illustrated; once again the information is carried from node to node in individually addressed packets or frames; the transmission media can be coaxial cable, fiber optic cable, or twisted pair cable.

3. In a token ring network, a special packet called a token constantly circulates around the ring from node to node; if the token is marked free, a node that receives it is allowed to transmit its message; when a node wants to transmit, it waits for the free token, marks the token as busy, and attaches the addressed packet or frame of information which then moves around from node to node until it arrives back where it started; along the way each node reads the address and pulls off and processes any packet that is addressed to it; when the packet arrives back at the originating node, the information packet is removed, the token is marked idle, and the token continues to circulate around the ring indicating the network is idle and available for use by another node.

Elements of a Public Data Network
Local Area Network (Cont'd)

4. As illustrated in the figure, the LAN can be used to interconnect personal computers, for printer sharing, to provide access to minicomputers and mainframes, and to provide higher level services such as electronic mail (E-mail).

5. Public policy issues associated with LANs are similar to those presented by CPE and inside wiring discussed in conjunction with the public switched telephone network; in countries like the U.S. the rapid growth in the number of LANs and the increasing speed at which they operate has put significant pressure on carriers to provide high speed, low delay (low latency) services to interconnect them (i.e., services that go beyond traditional packet switching).

Elements of a Cable Television Network

Source: HAI

BEST COPY AVAILABLE

Elements of a Cable Television Network
Traditional One-Way, Tree, and Branch Network

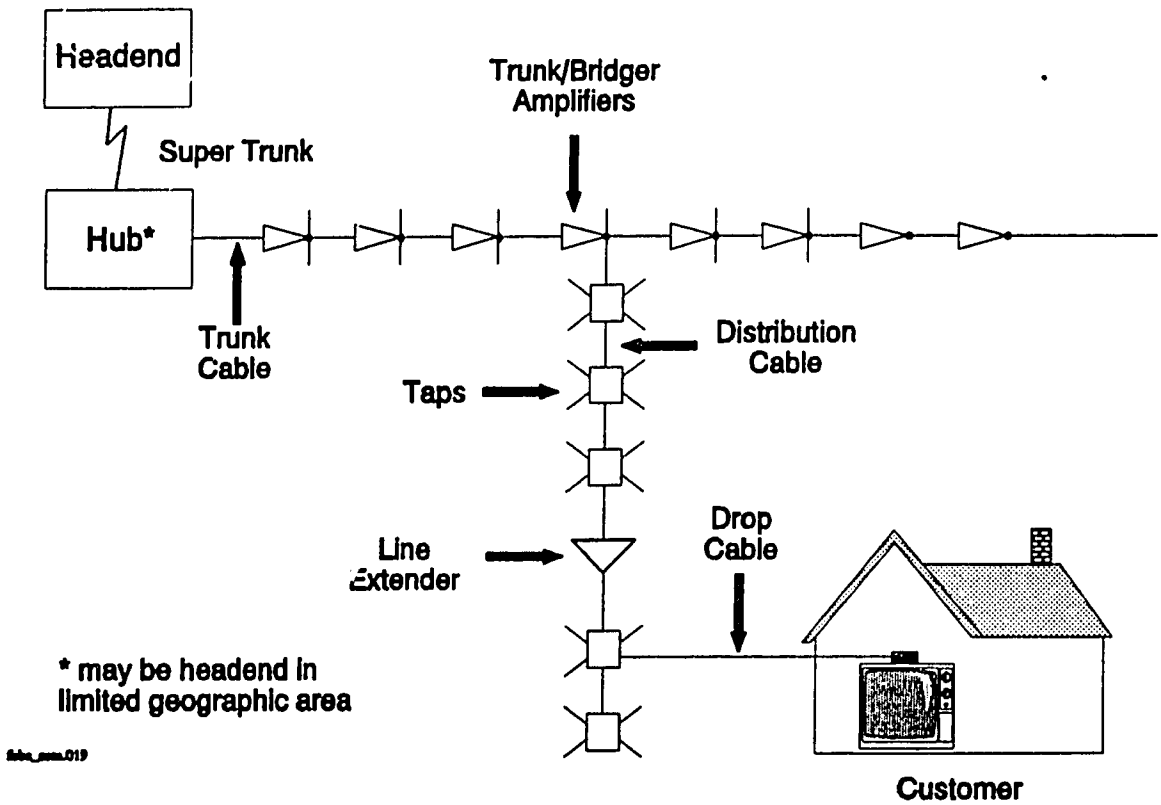

Elements of a Cable Television Network
Traditional One-Way, Tree and Branch Network

1. Illustrates a traditional cable television system which utilizes coaxial cable as the transmission media; coaxial cable has a very wide bandwidth (up to 1 GHz or so) but is relatively lossy.

2. In a traditional system like the one illustrated, television signals are collected from various sources at the headend (i.e., from over-the-air broadcasts, satellite transmissions, or via microwave radio from other locations); the capacity of the coaxial cable is divided into 6 MHz wide channels on a frequency division multiplexed basis and the signals are inserted into these channels at the headend.

3. Note that the radio frequencies used inside the cable are the same as those used for a host of over-the-air services, but the coaxial cable confines the internal signals to the cable and prevents external signals from causing interference to them.

Elements of a Cable Television
Traditional One-Way, Tree and Branch Network (Cont'd)

4. Because of the signals get weaker due the losses in the cable, the broadband set of channels must be boosted or amplified at regular intervals as shown; it is the noise and distortion produced by these amplifiers that limits the capacity of a cable television system -- not the cable itself.

5. Note also that in a cable television system using the tree and branch architecture, the same set of signals is available everywhere on the system; therefore adding a subscriber is simply a matter of tapping into the cable; there is no need to run a separate new path back to the headend.

6. The only switching that occurs takes place at the subscriber's television set or convertor; the network itself is not switched.

7. Some of the major advantages and disadvantages of the traditional cable television architecture are noted on the next slide.

8. As a mass media or broadcasting-like service, cable television presents a whole host of public policy issues; perhaps the most complex and contentious set of policy issues in the U.S. and elsewhere are associated with the interrelationship between cable television networks and the public switched telephone network; in particular, should telephone companies be allowed to provide cable television services (and, if so, to what extent) and should cable television operators be allowed to provide telecommunications (i.e., non-entertainment) services?

Elements of a Cable Television Network

Notes on the Architecture

- Advantages and Disadvantages
  - Advantages:

    Effective for "One-to-Many" Services, i.e. Broadcasting

    Ease of Adding Subscribers
  - Disadvantages:

    "Upstream" Noise Buildup

    Ineffective for "One-to-One" Services

    Lack of Security

Source: HAI

BEST COPY AVAILABLE

Underlying Technological Trends

Source: HAI

INTERNATIONAL PRODUCT ENGINEERING

Underlying Technological Trends

Conversion to All Digital Networks

- Advantages:
  - Signal Regeneration
  - Ease of Multiplexing
  - Ease of Encryption
  - Ease of Signaling
  - Use of Modern Technology
  - Performance Monitorability
  - Operability at Low Signal/Noise or Signal/Interference
  - Integration of Switching and Transmission
  - Accommodation of Other Services

- Disadvantages:
  - Larger Bandwidth Requirements
  - Critical Timing
  - Need for Analog to Digital Converters

Underlying Technological Trends
Conversion to All Digital Networks

1. Major trend is conversion to all digital networks because of the advantages shown on the slide.

2. Policy issues involve such questions as the pace at which the conversion should occur and whether the conversion should be done on an overlay basis or through direct replacement (or on some combination of the two).

Underlying Technological Trends
Separation of Signaling from Transport

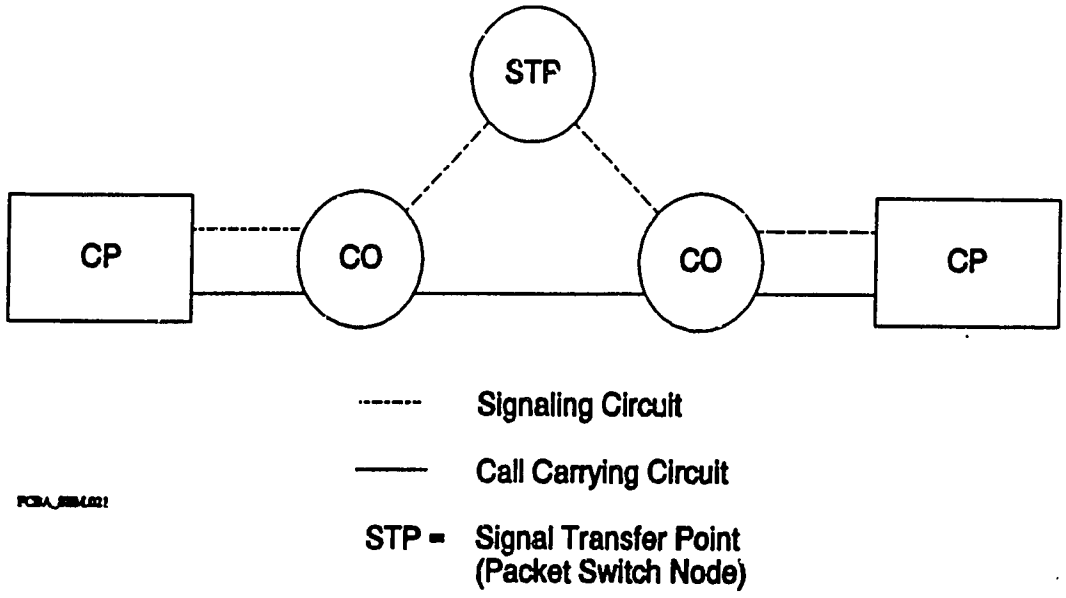

Underlying Technological Trends
Separation of Signaling from Transport

1. The PSTN consists of two logically separate networks -- the part that carries the actual voice signal itself -- the conversation network, and the part that carries information in setting up and taking down calls - the signaling network.

2. Many improvements in the PSTN are associated with improvements in the signaling part of the network and involve actual separation of the conversation and signaling networks -- e.g., voice conversations handled on a circuit switched basis but signaling handled on a separate common channel utilizing packet switching.

3. Examples of improvements with common channel signaling include "look-ahead" and the ability to toggle between two calls.

Underlying Technological Trends
Separation of Signaling from Transport (cont'd)

4. Even more sophisticated services are possible when computer processors and data banks are introduced in the signaling network to create "Intelligent Networks."

5. Policy issues that arise include reliability, privacy, and interconnection concerns.

Underlying Technological Trends
Switch Software Unbundling

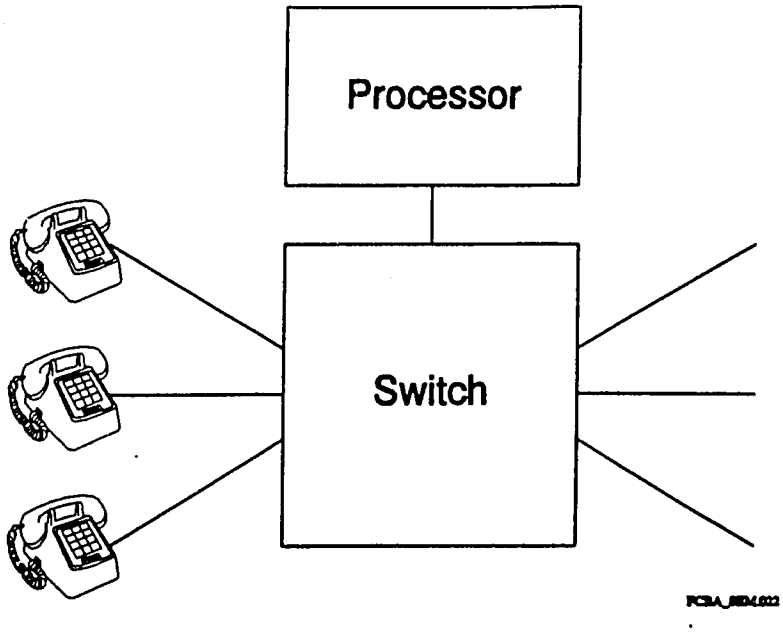

Underlying Technological Trends
Switch Software Unbundling

1. Switches (both PBXs and the switches used in the PSTN) are composed of two parts -- the processor which actually controls the switching and the switching matrix where the actual connections are made between circuits.

2. In early versions of the switches, the processor and switch elements were so tightly integrated or interwoven that the customer could not change the switch software (e.g., to create a new service) -- it had to be done by the switch manufacturer; that is, there was no separation of the application program from the operating system.

3. By separating switch control or "application" software from lower level switching functions, it allows the PBX customer or carrier to develop its own specialized applications without depending upon original manufacturer; the PBX, for example, can be linked to external workstation computer and different screens of information can be delivered to an agent depending upon the identity of the calling party; this is one of the hottest areas of development in the U.S.

4. Policy issues that arise include privacy concerns, where to draw the line between regulated (reserved) communications activities and unregulated (open) data processing activities, how to prevent monopoly carriers from cross-subsidizing or discriminating in favor of their own data processing activities, and how to define the switch-computer host interface.

Underlying Technological Trends
Private T1/E1 Network

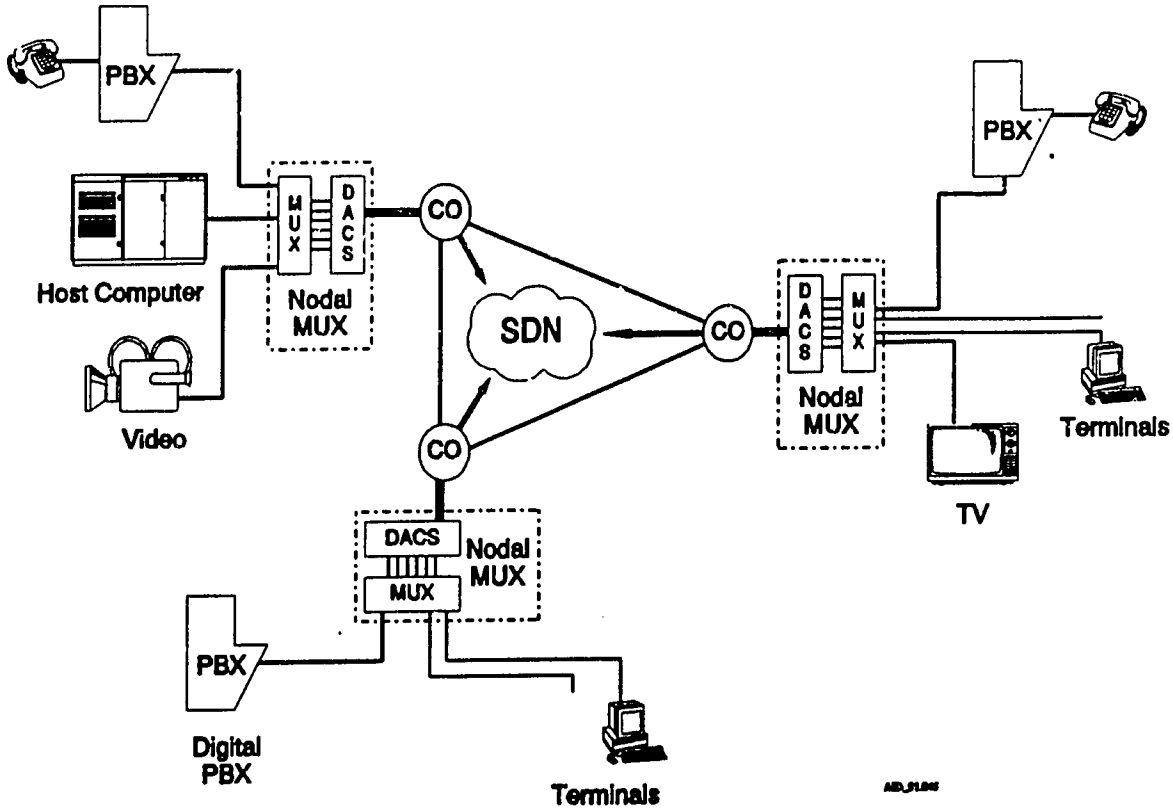

Underlying Technological Trends
Private T1/E1 Network

1. Large companies and public institutions create own internal, private, all-digital networks using privately procured PBXs, digital multiplexers, cross-connects, etc. -- meet own specialized needs.

2. The actual transmission facilities may be leased from the carrier or constructed by the institution (e.g., using a microwave system).

3. Policy issues that arise include possible loss of business to the public carrier (versus the cost on upgrading the network beyond the needs of the ordinary consumer), availability and pricing of dedicated private lines that determine the feasibility of specialized private networks, and the prices and terms and conditions associated with interconnecting private networks with the PSTN.

Underlying Technological Trends
Integrated Services Digital Network

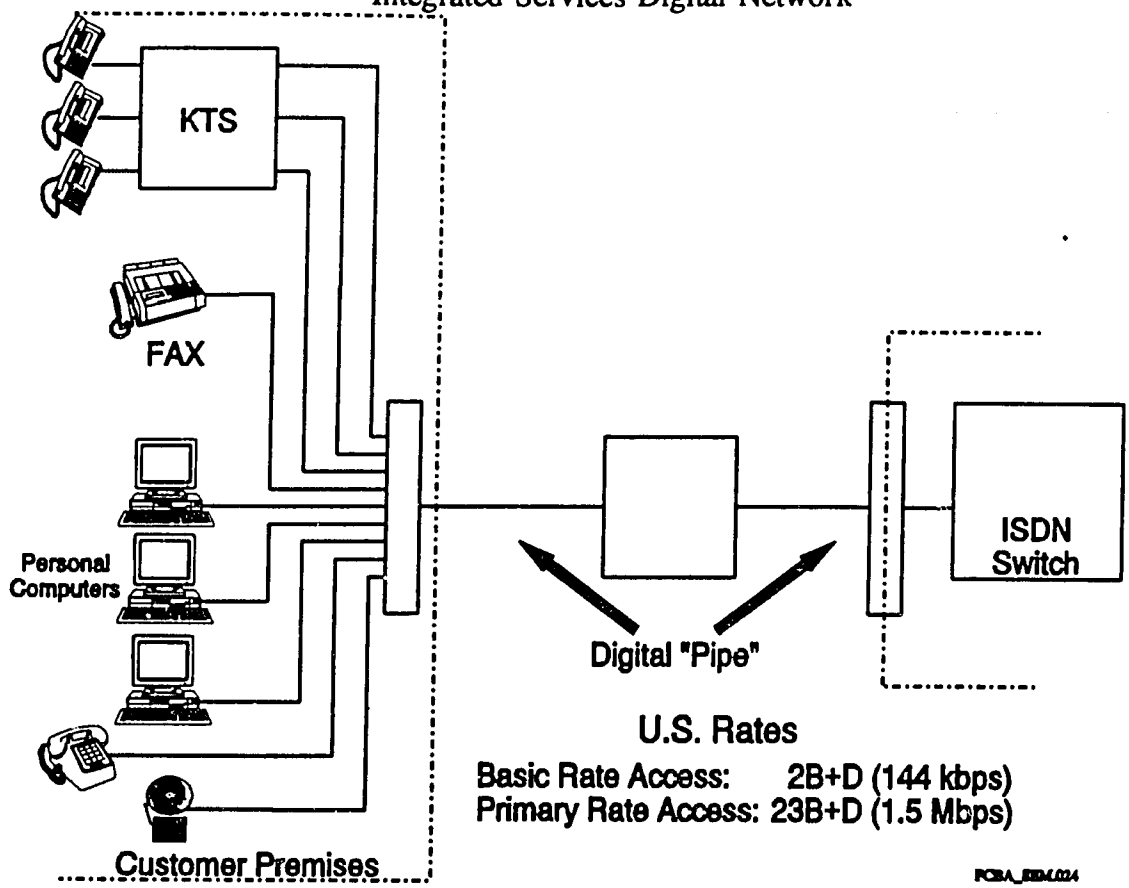

Underlying Technological Trends
Integrated Services Digital Network

1. Digital transmission and switching facilities are clearly the technology of choice except in subscriber access portion of the network.

2. Telephone companies on a worldwide basis, however, are moving towards upgrading local loop and local switching facilities to permit the offering of digital services directly to the customers' premises; collective name for these developments is Integrated Services Digital Network.

3. Provides multiple conversation/information channels plus a separate signaling channel suitable for both signaling and some customer data.

4. The technology has been slower to develop than expected -- technology, not market driven?

5. Policy issues that arise include questions of how fast should the technology be deployed and who should pay for the upgrading of the network if the primary beneficiaries are businesses and other large institutions.

Underlying Technological Trends
The Intelligent Network Concept

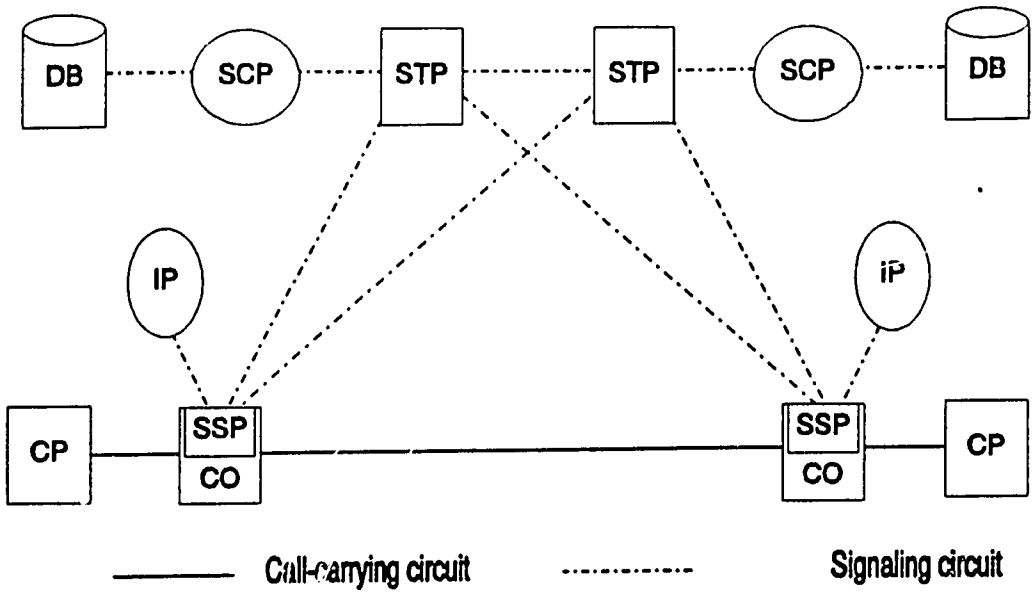

CP	=	Customer Premises	SCP	=	Service Control Point
CO	=	Central Office Switch	DB	=	Database
SSP	=	Service Switching Point	IP	=	Intelligent Peripheral (Processor)
STP	=	Signal Transfer Point		-	Advanced Intelligent Network (AIN)/SCP
				-	ISDN Service Node (SN)

Underlying Technological Trends
The Intelligent Network Concept

1. The Intelligent Network concept is a natural extension of the advances in switching, signaling, and access described earlier.

2. In the IN concept, computer processors and associated data bases are placed in the network where they can be accessed from the signaling channel.

3. Typically uses calling and called numbers plus other information (e.g., time of day) to handle calls in specialized ways -- to route calls on a toll-free basis or to route to a particular location depending upon time-of-day and/or originating location; virtual or software defined networks.

4. Will play a key role in future network developments -- personal number calling and personal communications services.

5. Once again the policy issues include questions about the dividing line between regulated and unregulated activities, privacy, and interface/interconnection issues.

Underlying Technological Trends
Telephone Company Fiber-in-the-Loop (FITL)

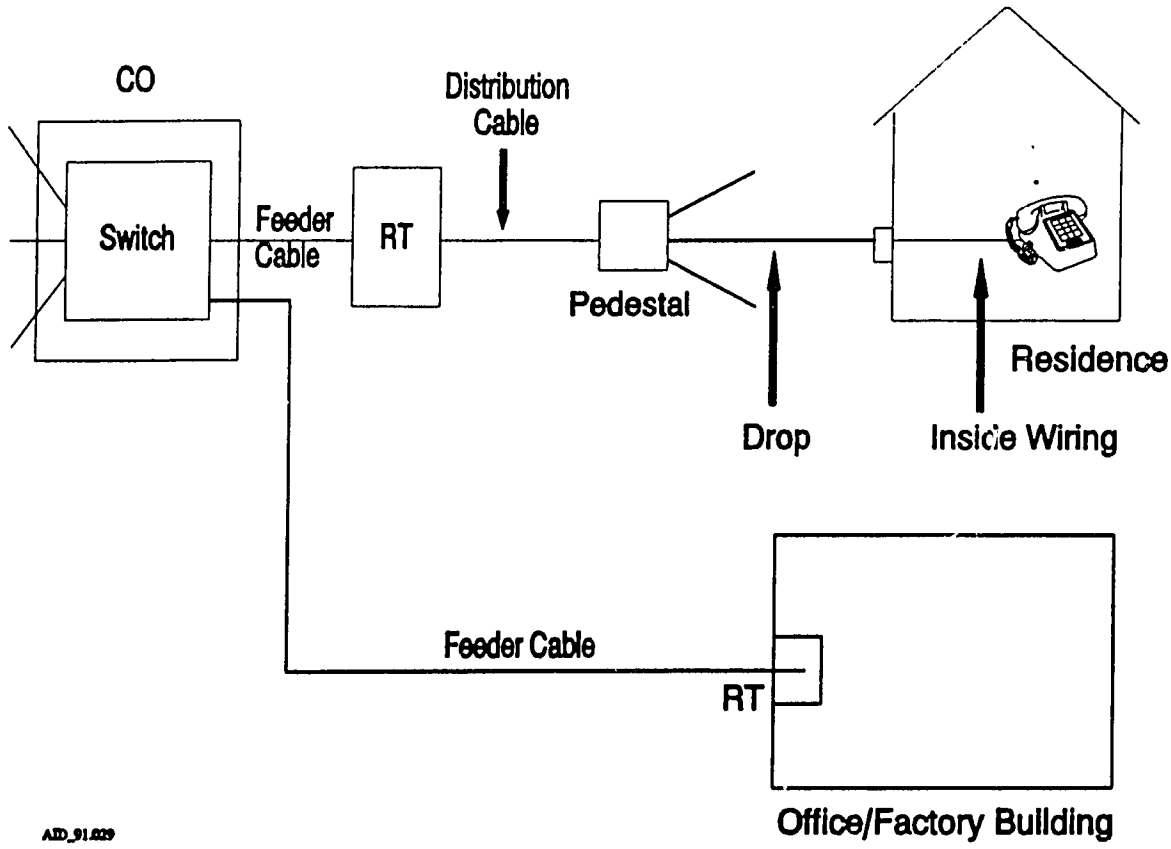

Underlying Technological Trends
Telephone Company Fiber-in-the-Loop (FITL)

1. Another major trend is toward higher capacity/larger bandwidth facilities -- i.e., fiber optic systems; already used extensively in inter-office portion of the network.

2. In local telephone company terms, translates into Fiber-in-the-Loop (FITL); generally conceded (in U.S. at least) that currently can only be cost justified in the feeder portion of the loop with balance using conventional twisted-pair copper; Fiber-to-the-Curb takes fiber a step closer.

3. Trend toward fiber directly to large buildings, office parks, and similar locations.

4. Fiber-to-the-Home (FTTH) and possibility of providing entertainment video services raises a host of policy issues as noted earlier.

Underlying Technological Trends
Open Network Architecture (ONA)

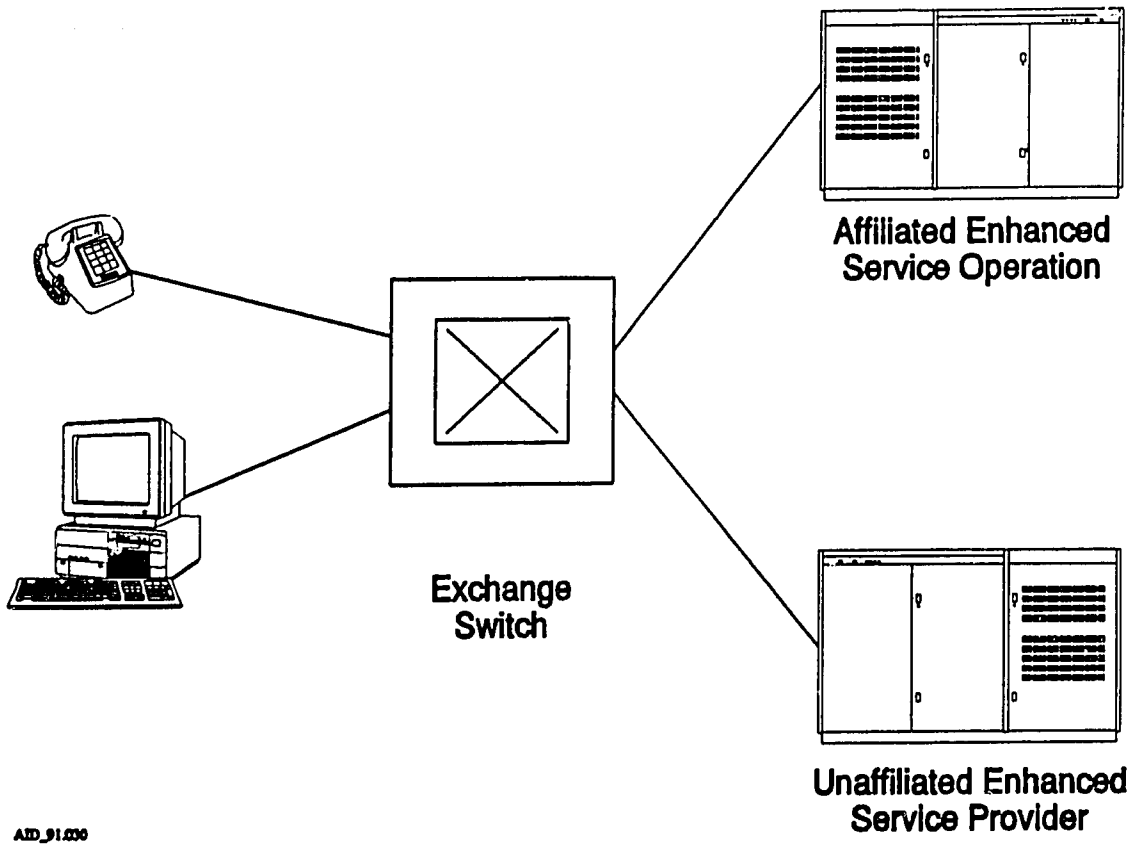

Underlying Technological Trends
Open Network Architecture (ONA)

1. Concept of Open Network Architecture (and related concept of Open Network Procedure in Europe) driven by (1) regulator's desire to prevent abuse of telephone company market power, (2) the regulator's desire to encourage the development of enhanced services, and (3) the telephone companies' desires to decrease their dependence upon switch vendors for new software/services.

2. Basic concept fairly straightforward: calls for the telephone company to offer interconnection to their basic network to competitive suppliers of enhanced (e.g., information) services in a manner that is comparably efficient both technically and economically to the interconnection they provide their own enhanced service operations.

3. Examples -- voice storage and retrieval, sports scores, etc.

Underlying Technological Trends
The Common ONA Model

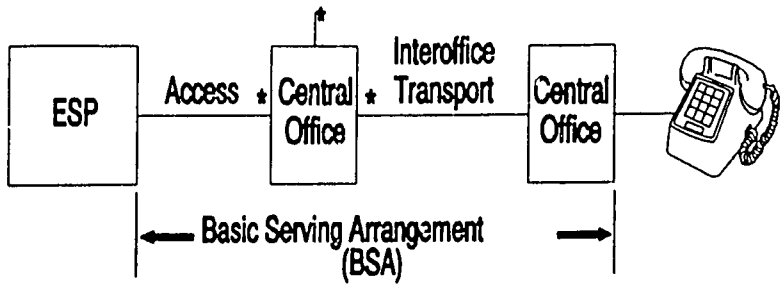

* Points of Possible Additional Unbundling

- BSAs:
  - Circuit Switched Serving Arrangement
  - Packet Switched Serving Arrangement
  - Dedicated Access Serving Arrangement
  - Dedicated Network Access Link
- BSEs (Examples):
  - DID Trunk Queuing
  - Calling Number Delivery
  - Answer Supervision
  - Conditioning
- CNS (Example):
  - Call Forward on Busy/No Answer

Underlying Technological Trends
The Common ONA Model

1. Common ONA Model as approved by regulators in the U.S. includes four types of Basic Serving Arrangements (BSAs) and a large number of Basic Service Elements (BSEs) that are associated with particular BSAs; the BSEs can be obtained from the telephone company on an unbundled basis.

2. Significant policy debate over degree of unbundling and pricing of BSAs/BSEs.

Underlying Technological Trends
Cable Television Company Deployment of Fiber

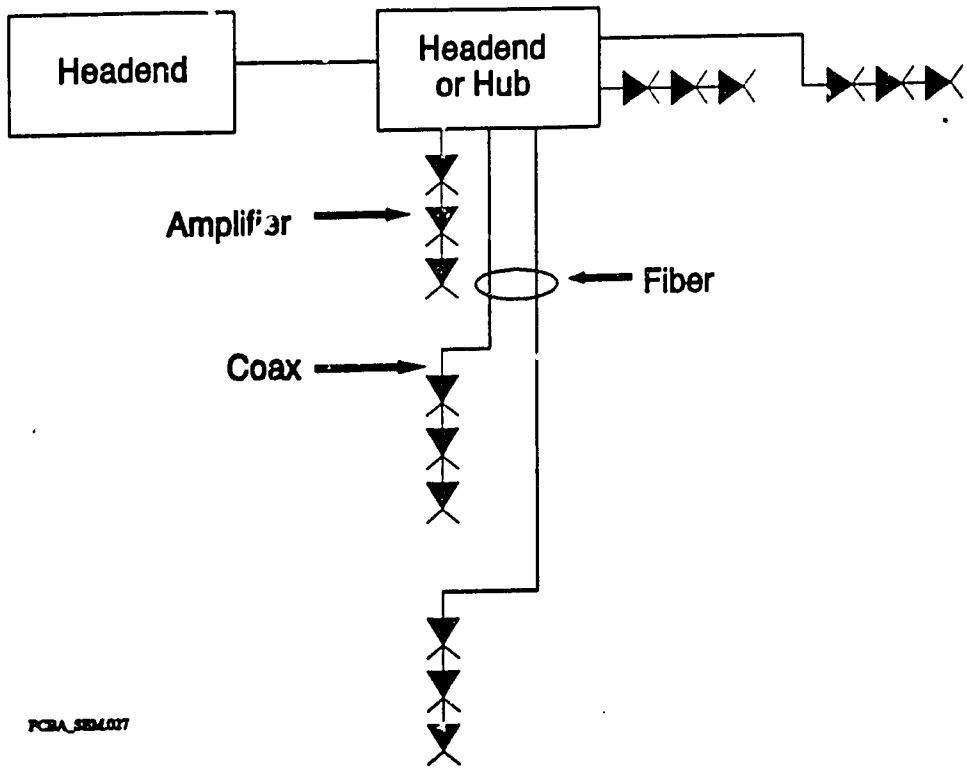

Underlying Technological Trends
Cable Television Company Deployment of Fiber

1. Cable television companies also deploying fiber in their networks to a point nearer their subscribers.

2. Advantages include reduced noise and distortion, improved reliability, greater bandwidth due to fewer amplifiers, and increased ability to provide two-way services.

3. Note that, similar to developments in telephone company deployment, this brings fiber closer to the subscriber and, in addition, results in more "star-like" configuration that facilitates two-way, point-to-point services.

4. Creates attendant policy issues relating to what services cable television companies should be allowed to provide (e.g., in competition with the local telephone company).

Underlying Technological Trends
Advances in Multiplexing

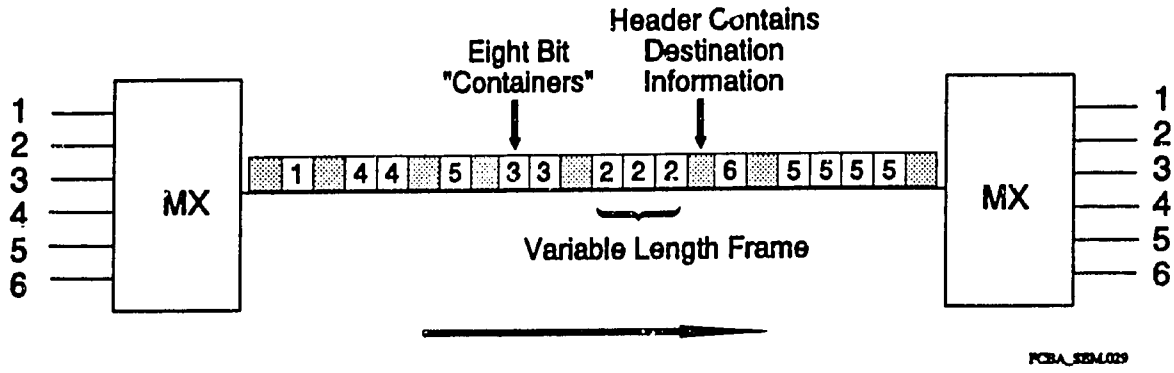

Underlying Technological Trends
Advances in Multiplexing

1. Multiplexing involves combining more than one conversation/signal on a common transmission facility such as a radio transmitter or a lightwave in a fiber optic system.

2. While multiplexing increases the cost of the equipment used at each end of a transmission link, it can reduce the total costs by eliminating the need to construct additional transmission facilities for each independent signal.

3. In the digital world, a common type of multiplexing is Time Division Multiplexing (TDM); in the traditional form of TDM, the capacity of the channel is divided up into fixed length time-slots or frames which are then shared on a rotating basis by multiple input signals; this is referred to as the Synchronous Transfer Mode (STM).

4. While the STM form of multiplexing can be significantly more efficient than constructing individual facilities for each input signal, it is rigid in terms of the increments of capacity that can be provided, and capacity is wasted if a particular input channel is not active.

Underlying Technological Trends
Advances in Multiplexing (cont'd)

5. More advanced forms of multiplexing are based upon packetizing the information and individually identifying each packet or frame; in this form of multiplexing (which is referred to as Asynchronous Transfer Mode), variable capacity can be provided since certain input channels can be assigned more frames or timeslots in a dynamic way; efficiency is also improved since inactive input channels do not consume transmission capacity.

6. Goal is to accomplish the multiplexing fast enough to transmit voice, data, and video on an integrated basis; recall in traditional packet networks, the delays incurred make them unacceptable for voice; some of the related techniques are known as frame relay, fast packet, and cell relay.

7. Resulting policy issues are associated with the further blurring of voice, data, and video services and intensified competition between private and public networks.

Underlying Technological Trends

Advances in Digital Signal Compression

- Compression Methods
  - Numeric Compression
  - Redundancy Removal
  - "Irrelevancy" Removal

Underlying Technological Trends
Advances in Digital Signal Compression

1. Not only are the electronic transmission "pipes" gaining in capacity (e.g., with the introduction of fiber) and multiplexing techniques improving, but scientists and engineers are finding ways of reducing the number of bits that have to be sent to represent particular signals -- called compression.

2. Slide indicates three of the techniques used to compress signals; such compression will, for example, allow the transmission of a high-definition television signal utilizing significantly less capacity (i.e., with a lower bit rate and/or reduced bandwidth).

Underlying Technological Trends
Metropolitan Area Networks (Interconnected Rings)

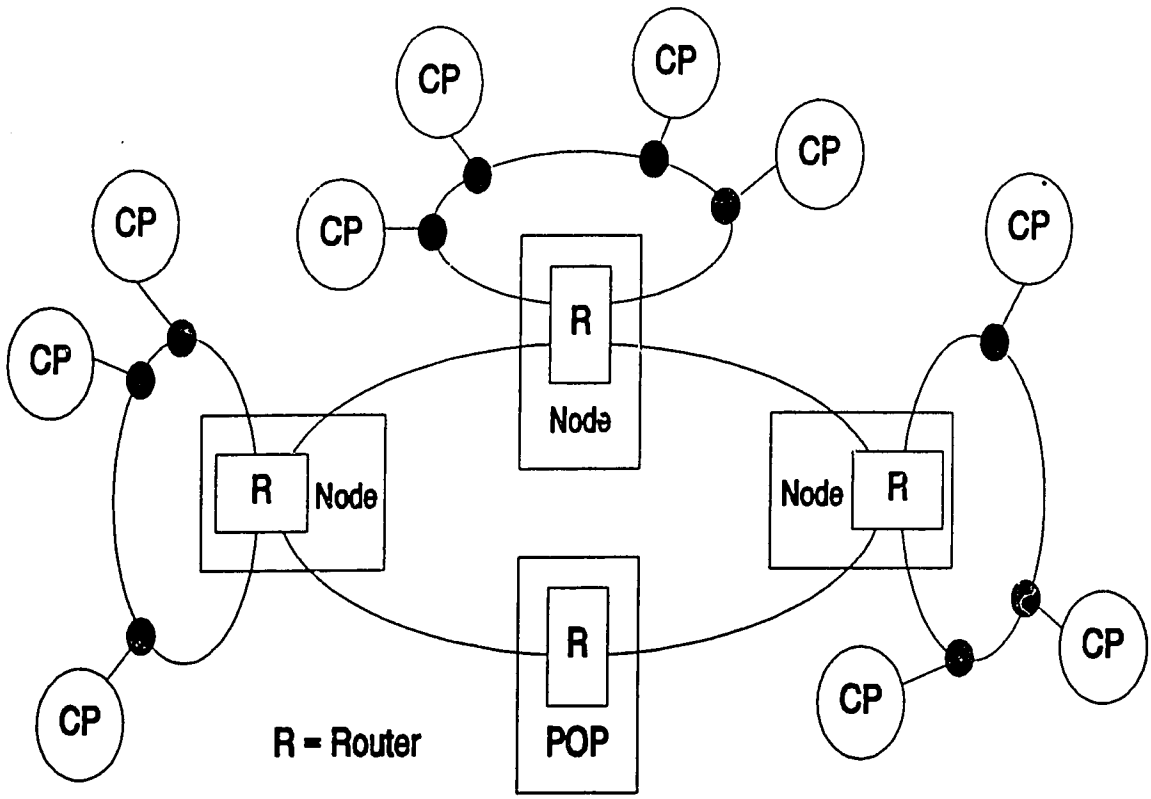

PCN06

Underlying Technological Trends
Metropolitan Area Networks (Interconnected Rings)

1. As illustrated earlier, local exchange telephone networks have traditionally been organized in a hierarchical fashion with the Central Office connected in a star-like configuration to tandem and toll/trunk switching offices; likewise, individual customers are connected to the Central Office via loops configured in a star topology.

2. A general problem with this star configuration is that it is vulnerable to failures in the links between the customer and the Central Office and between the Central Office and tandem or toll offices.

3. For this reason, telephone companies are showing an interest in moving away from the traditional, hierarchical, star-configuration and moving to ring topologies which can automatically provide an alternate route in the event of a failure.

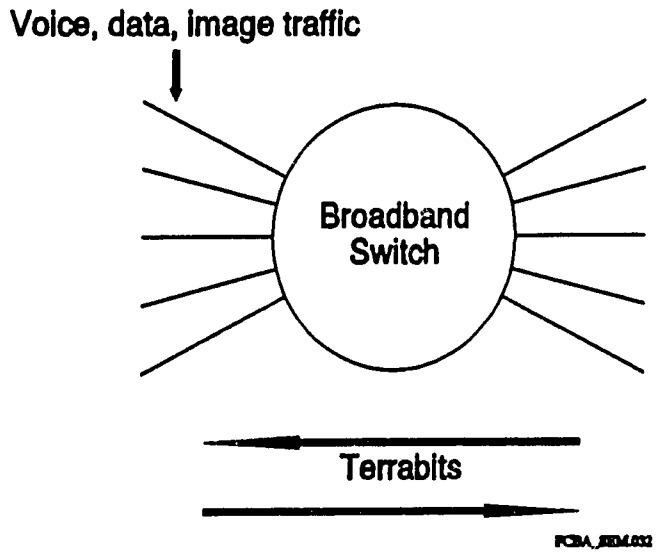

Underlying Technological Trends
Broadband Switching

1. The ultimate goal is to not only transmit voice, data, and image (video) traffic on a common transmission "pipe", but to switch it as well, in order to create a switched, broadband network.

2. That requires the development of broadband switching -- not just broadband transmission/multiplexing.

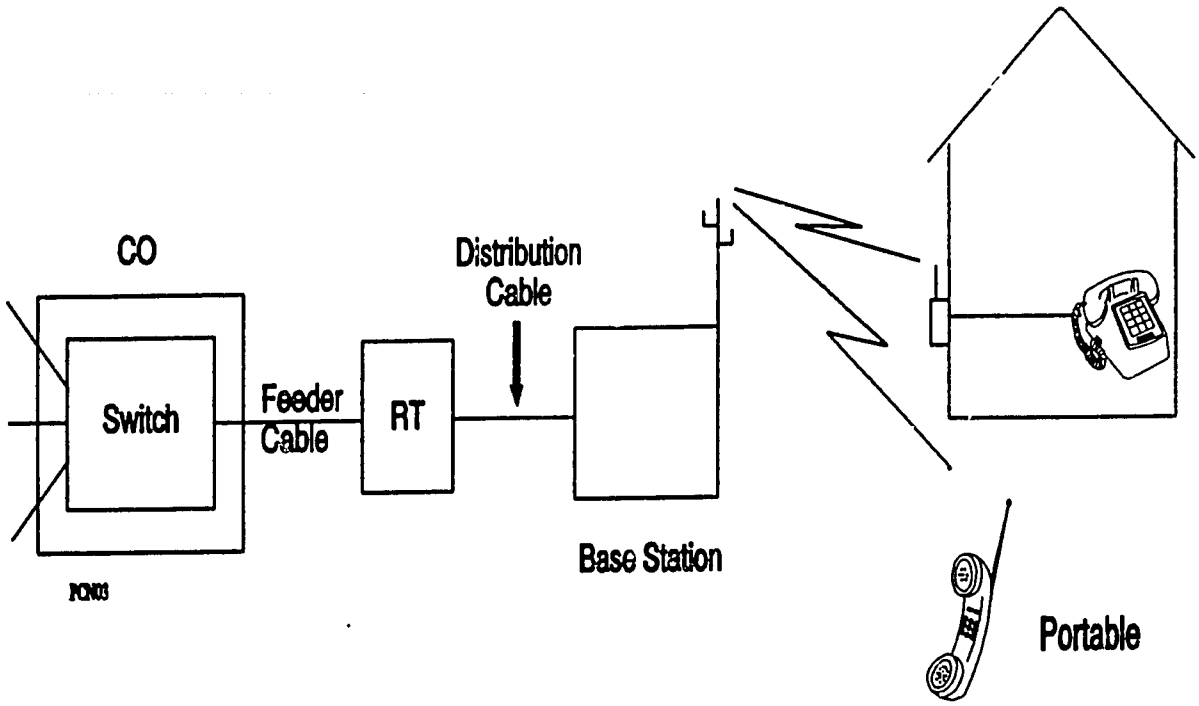

Underlying Technological Trends
Wireless Access

1. Lot of discussion in recent years about broadband fiber to the home, but more recently there has been considerable interest shown in the possibility of using radio or "wireless" techniques to provide narrowband access to the local exchange network.

2. The subscriber would benefit from advantages associated with cordless telephones and the carrier would benefit by offsetting the costs of the expensive part of the local loop and gaining the advantages of trunking in a part of the network that currently requires dedicated facilities on a one wire-pair per household basis.

3. Use of radio technology raises the possibility of local exchange competition since the same technology is available to cable television companies, alternative access providers and to ordinary entrepreneurs as well.

4. The possibility of such competition in turn raises a host of public policy issues including finding the necessary spectrum, determining who can compete, and the terms and conditions associated with interconnecting with the existing local telephone company.

Underlying Technological Trends

Some Observations, Speculation and Caveats Regarding Future Developments

- Tradeoffs in Level or Degree of Integration
- The Role of Analog Transmission
- Where Should the Intelligence Be?
- Alternative Visions of the Future From a Technological Perspective

Source: HAI

Other Technologies Worth Noting

Source: HAI

PRECEDING PAGE BLANK NOT FILMED

Other Technologies Worth Noting

VSAT Networks

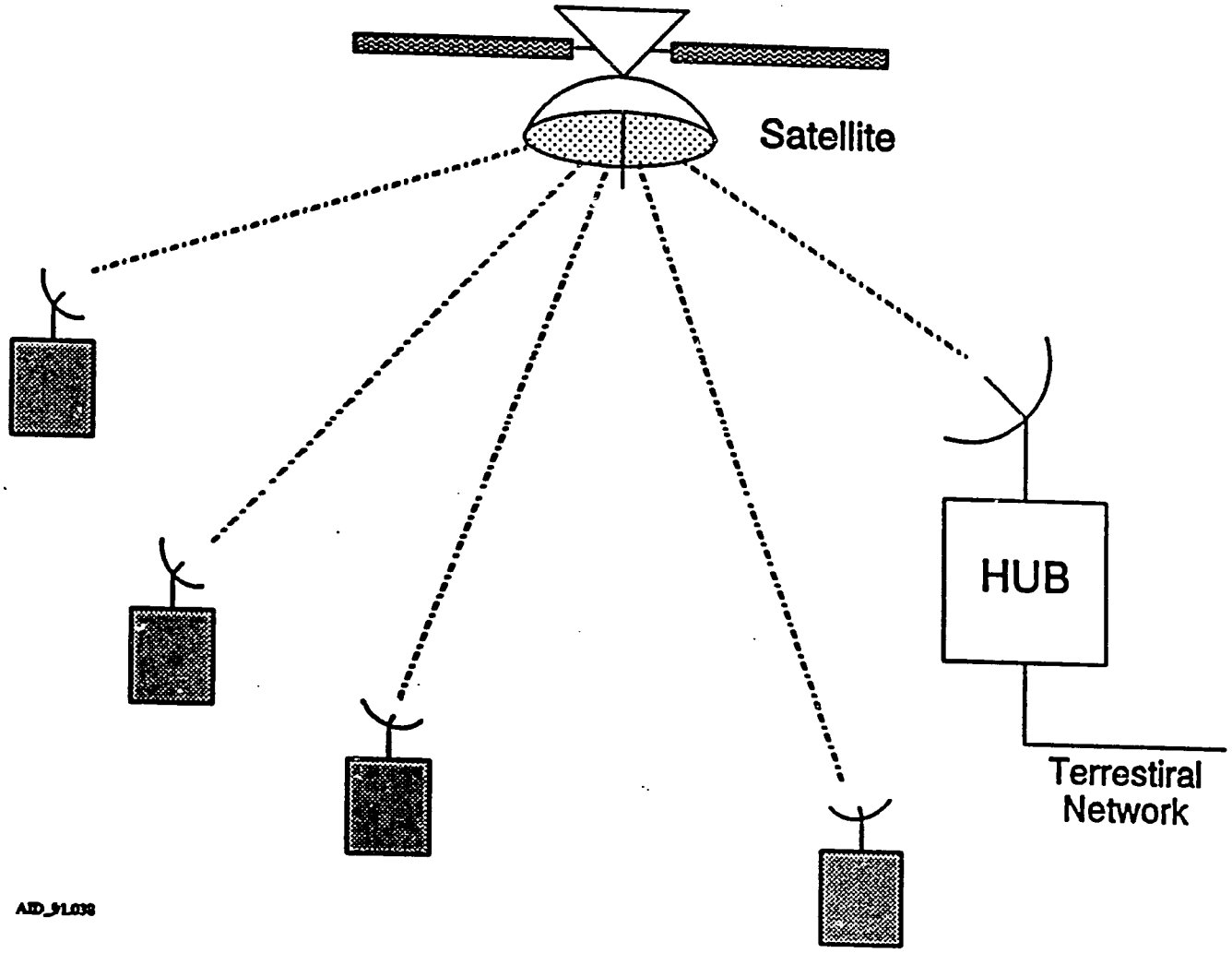

Very Small Aperature Terminals (VSATs)

Source: HAI

Other Technologies Worth Noting

"Wireless Cable"

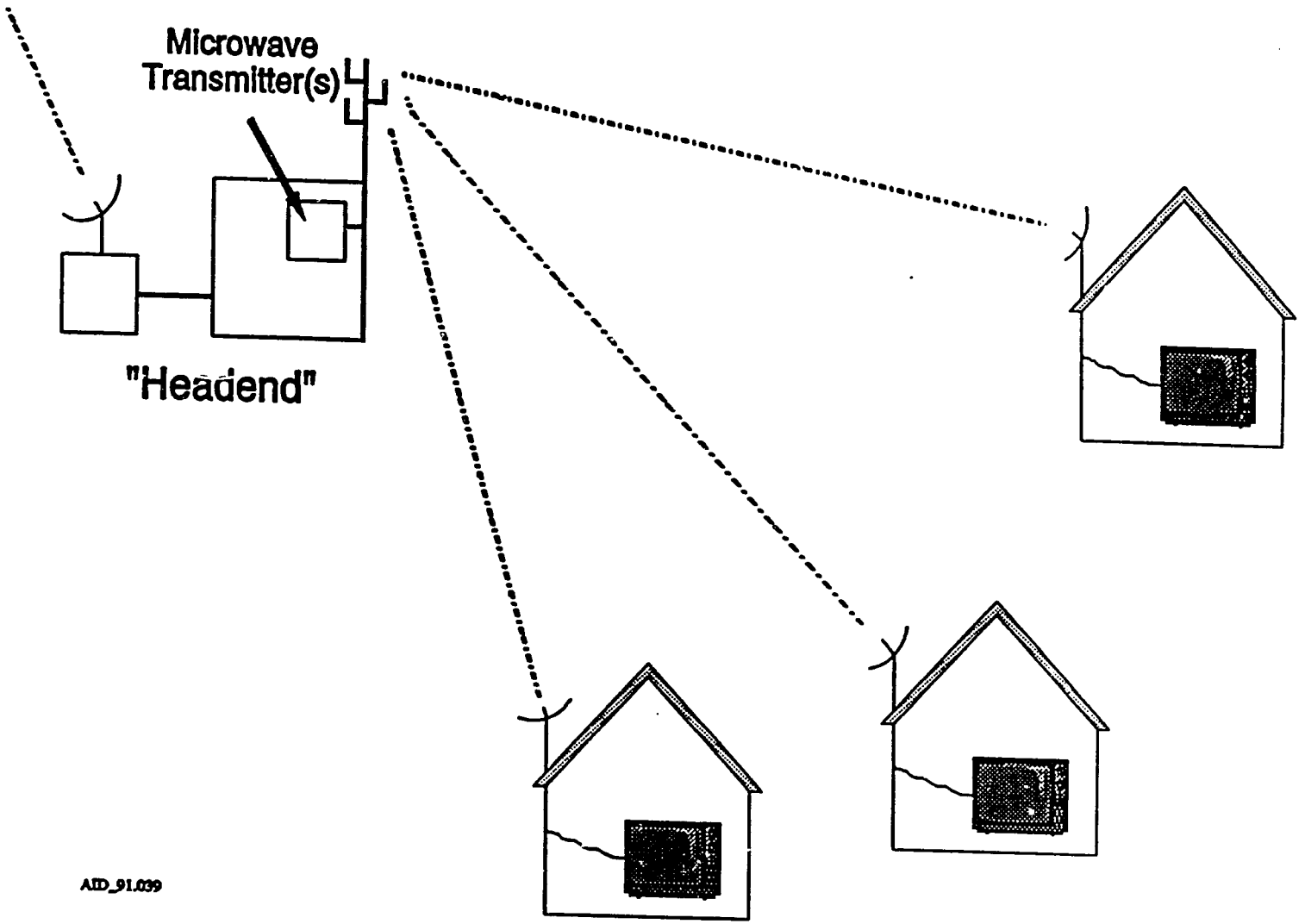

Source: HAI

Other Technologies Worth Noting

Trunked Mobile Radio Systems

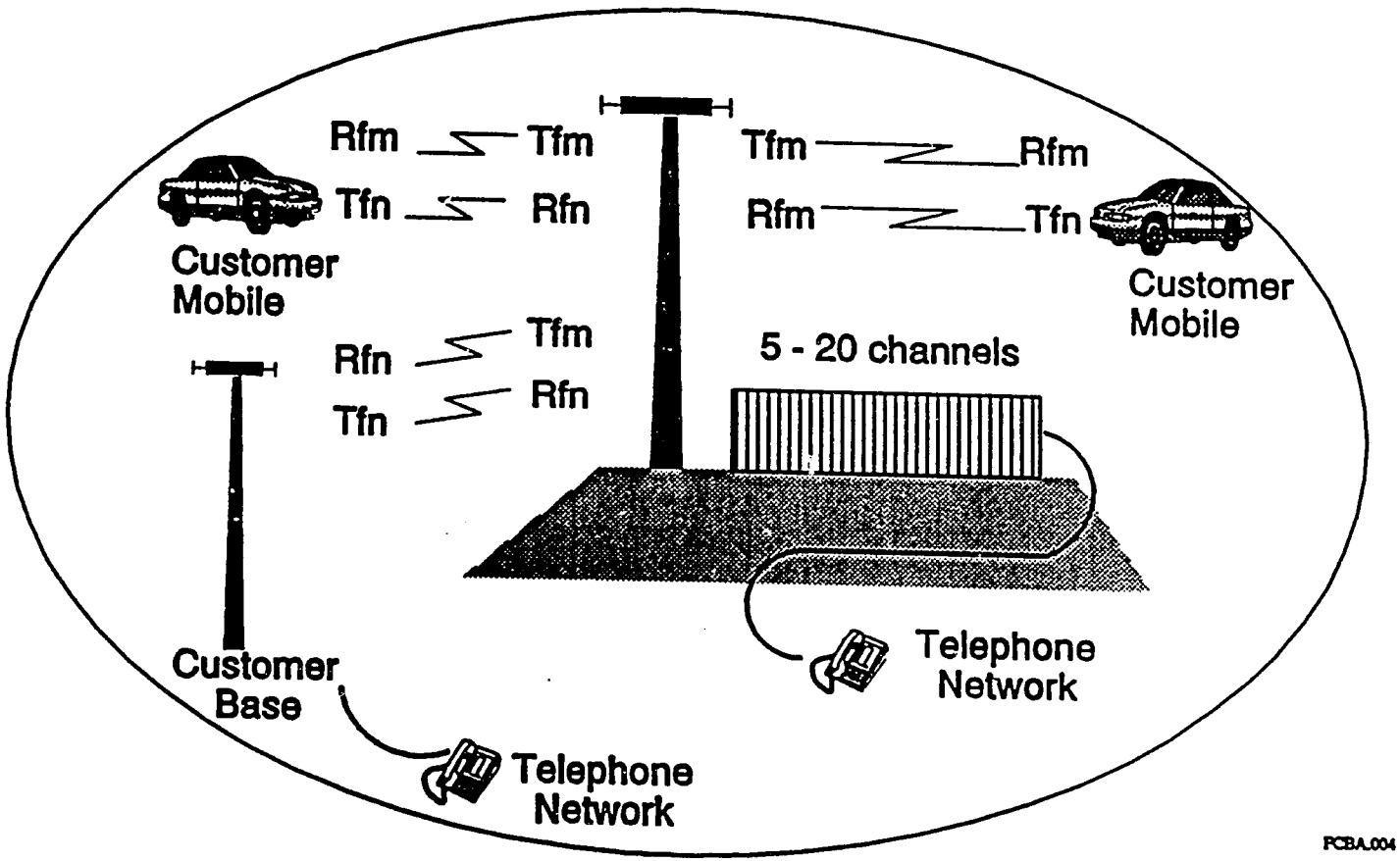

Source: HAI

Other Technologies Worth Noting

Packet Radio Systems (Fixed and Portable)

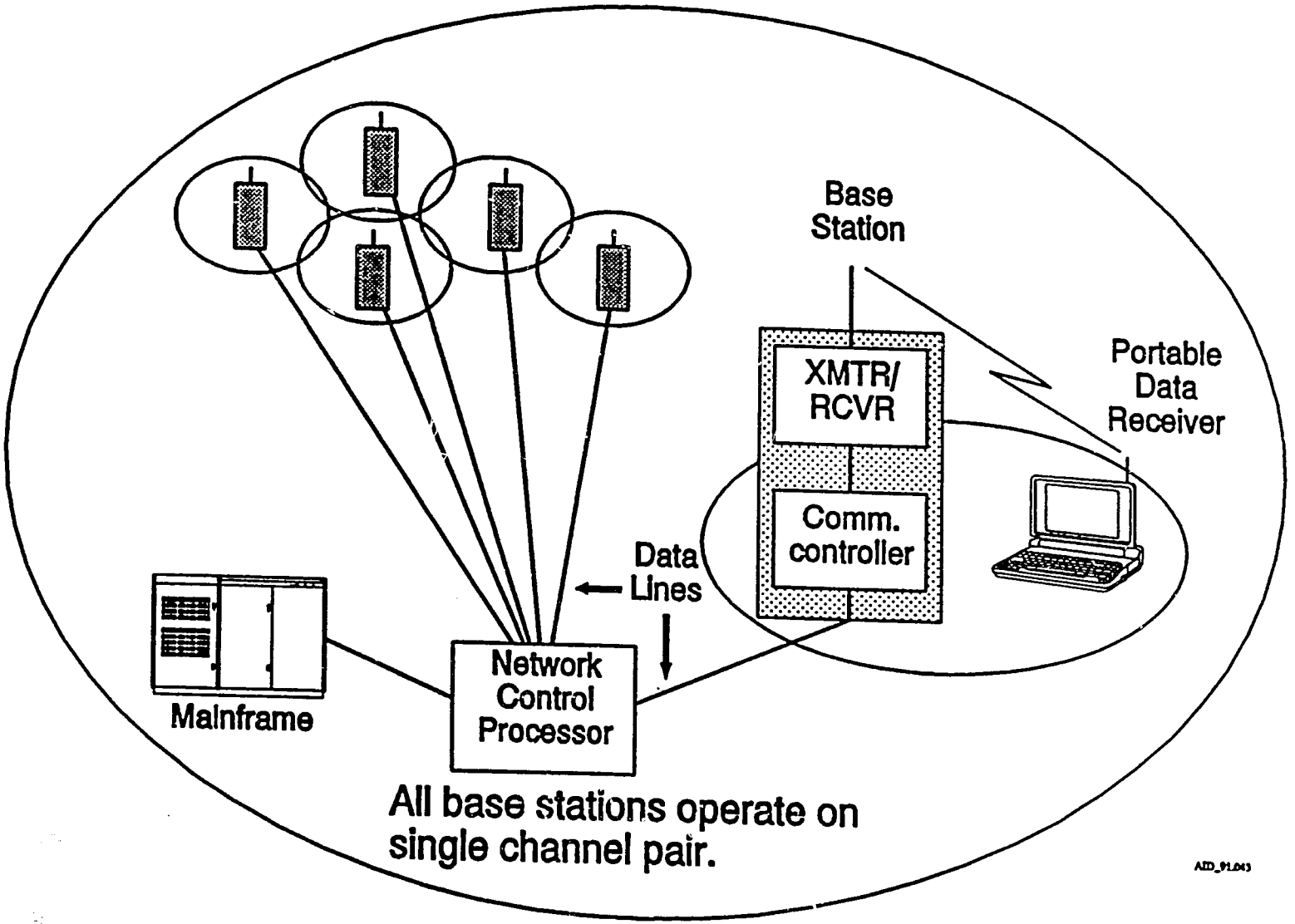

Source: HAI

Other Technologies Worth Noting

Cellular Mobile Radio

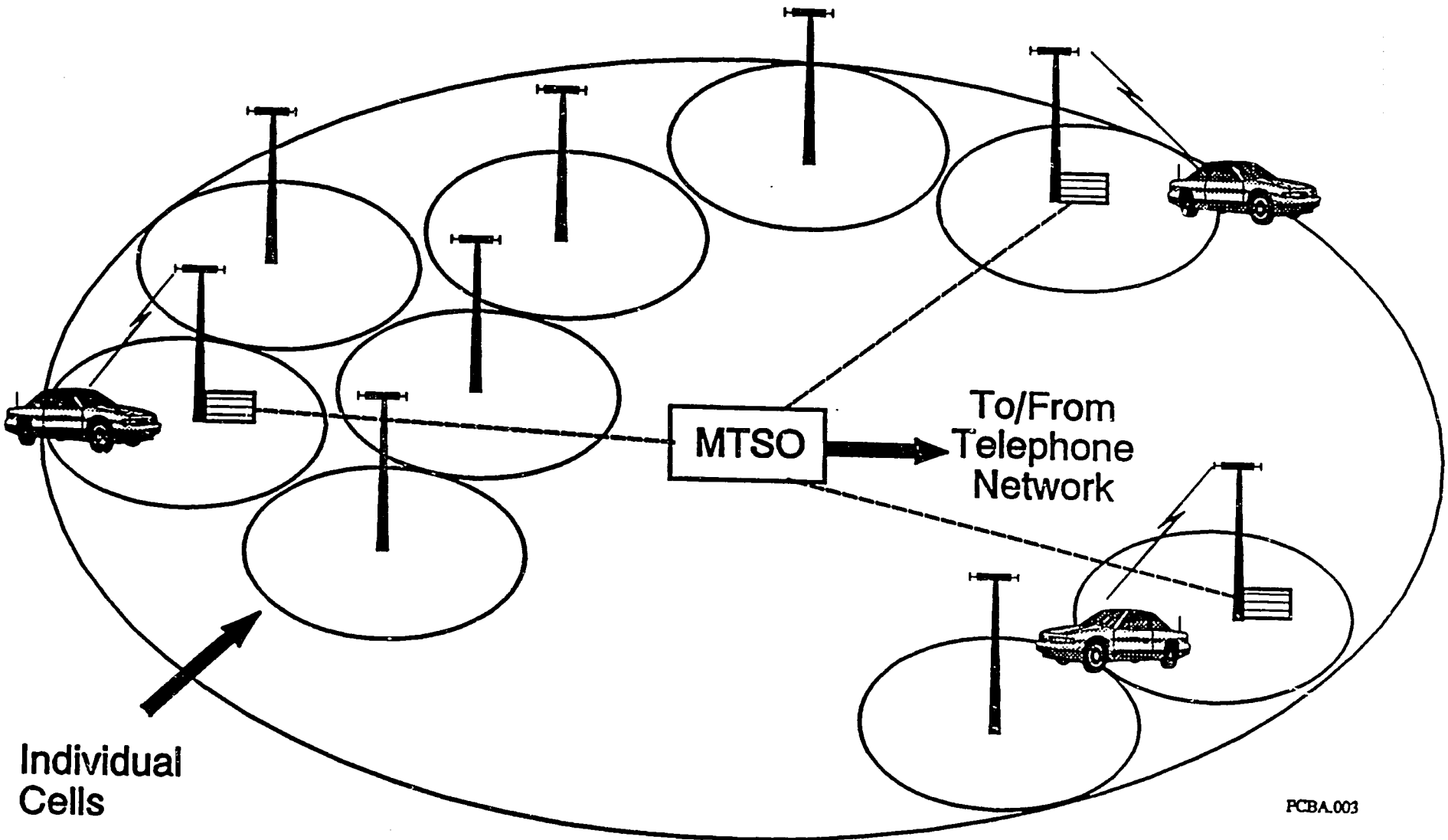

Source: HAI

Other Technologies Worth Noting

Personal Communications Services/Networks

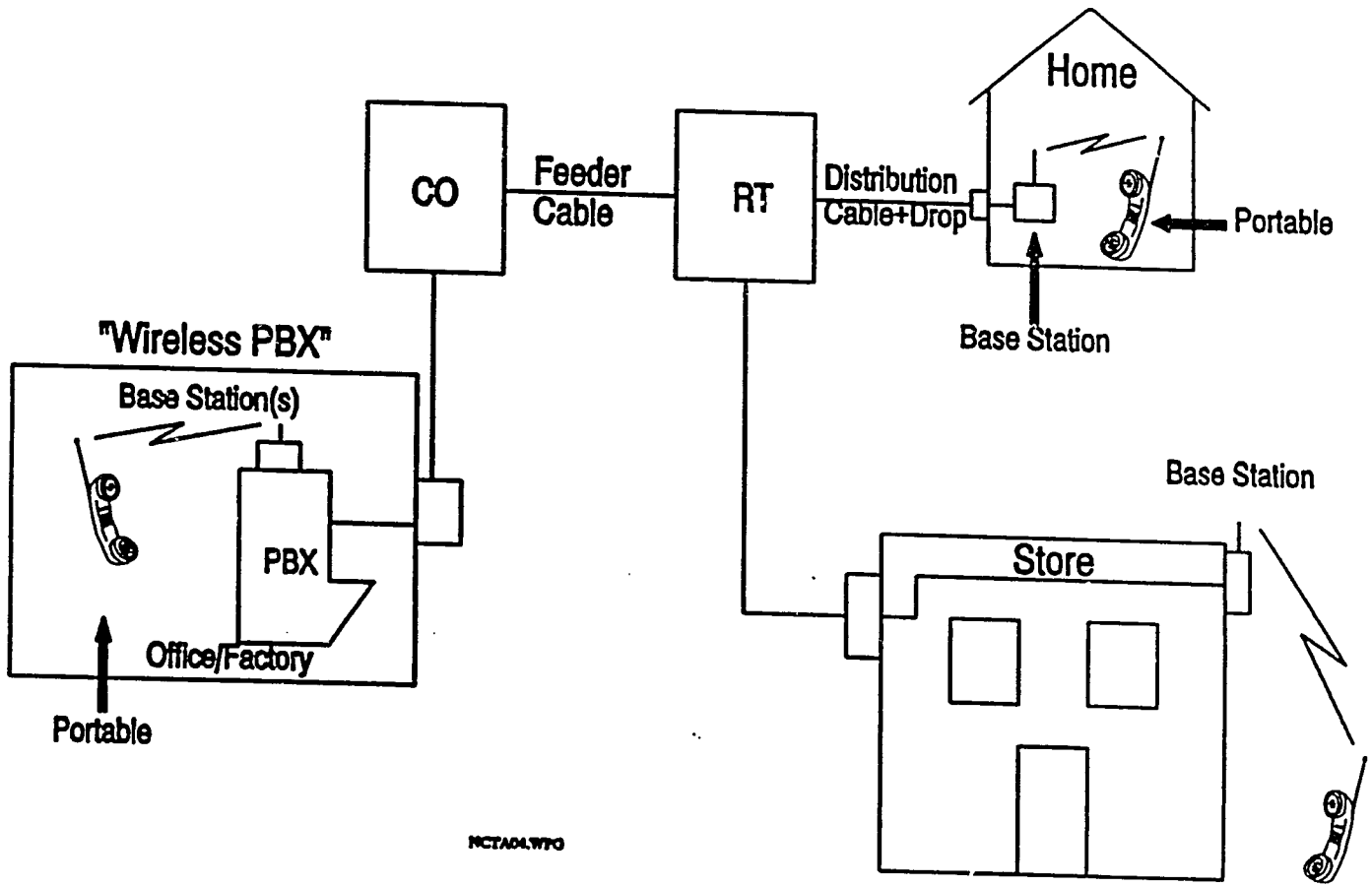

Source: HAI

Other Technologies Worth Noting

Wireless PBXs and LANs

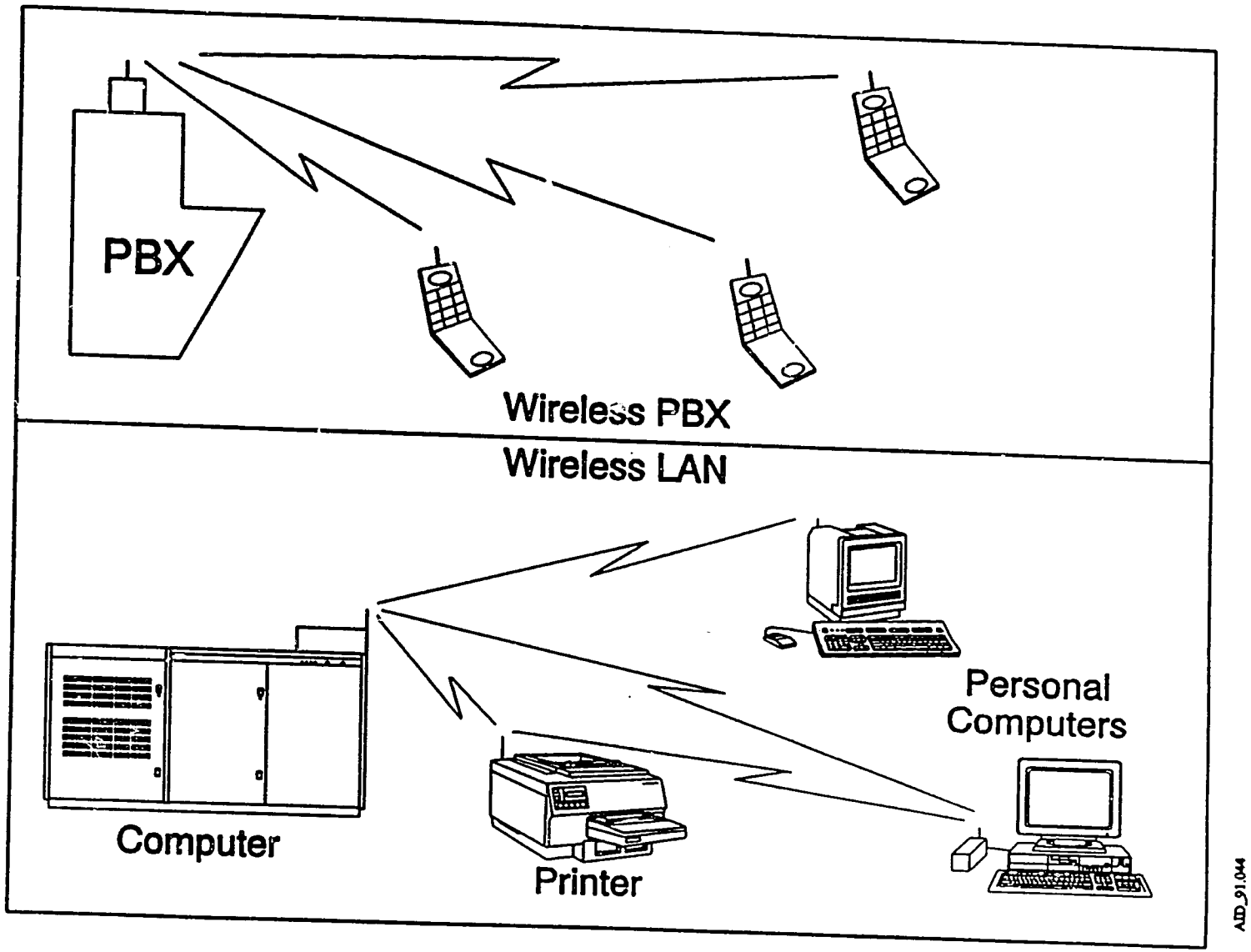

Source: HAI

MODULE II

Economic Policy and Regulatory Framework

TELECOMMUNICATIONS ECONOMICS:

A GUIDE TO POLICY OPTIONS

SUMMARY

Economic Efficiency

Economic efficiency leads to optimal resource allocation in the society i.e. resources are used in the most optimal manner. A desirable goal is to obtain economic efficiency in the telecommunications industry.

Economic Efficiency is obtained by:

- Telephone prices based on (marginal) cost causality:

  Fixed costs should be charged at a fixed price -- not usage sensitive prices

  Usage sensitive costs should have usage sensitive rates.

- Defining Telephone service correctly.
- Avoiding Cross-Subsidies.
- Targeted Subsides are preferred to Service Subsidies, if used at all.
- Subsides should not be financed through the rate structure, but directly by government.
- Competition is the most important tool in the control of a "monopoly."

Regulation/Control of a Monopoly

- Rate of Return Regulation is not best regulatory mechanism, in general.
- Incentive Regulation -- Price changes tracking the exogenously determined consumer price index with an allowance for total factor productivity is preferred form of regulatory control.
- No Entry Restrictions (after a transition period) should be imposed.

  Economies of Scale and Scope will deter entry, if the price structure is "correct"

  The market will correct inappropriate pricing structures, via entry of new firms.

  Controlled entry, e.g. duopoly in the UK long distance market, is not competition as refereed to above.

- Control of the Telephone system should be separated from the operation of the system, irrespective of ownership.

Copyright 1991 James H. Alleman

Previous Page Blank

Ownership

- Ownership determines incentives for managers.
- Privatization, in general, provides better incentives to management from the point of view of the society.

Other Issues

- Electromagnetic Spectrum is a scare resource, in the same manner as any other resource, and, therefore should be sold or leased -- not "given away."

DISCUSSION

The goal of this module is to developed an understanding the concepts of economic as applied to the telecommunications industry. Specifically, how economic efficiency is obtained through the pricing process, the market system, and how it can be distorted by monopolies and cartels as well as means of improving it through regulatory action, introduction of competition or other actions.

The most meaningful lesson is that the economy represent a finite resource which can only expand in one direction at the expense of another direction (as we say in English: "There is no free lunch.") Economic efficiency addresses how we can best utilize the scare resources of the society in the most meaningful manner as measured by consumers preferences and producers capabilities.

While the module will discuss the micro-economic policy issues, the macro economic policy issues is briefly addressed and remains an underlying concern. At the end of the module, the reader will be expected to apply the fundamental tools of economics to the policy issues of the telecommunications industry. While a particular policy issue may not have an "correct" answer, the trade off in terms of economics impacts should be clearer after an understanding of this module.

Demand

Definition of Telecommunications Services: The definition of the various telecommunication services is critical to the correct analysis of costs and its role in the pricing of telecommunication services. ***Subscriber access*** is the ability to make a call of any type, and generally its cost is fixed and invariant with usage. It represents the connection from the home or office to the telephone companies central office. However, the usual manner telephone service is defined is by "local" and long distance. This is incorrect, and seriously distorts the price structure and, hence the allocation of resources.

The demand for subscriber access is a derived demand and only exits because of the ability to use the system -- it is derived from the individual's desire to make and receive telephone calls.

The individual demands can to aggregated into the market demand curves. Telephone service has the property, however, that it is more valuable to each and every subscriber if additional subscribers join the network. This is know as the network externality and will be discussed in a few moments.

Subscribers Access Market: The market for subscriber access is unique in that as more subscribers are added, the value of the service is increased. The reason is straight forward -- as additional subscribers are

Copyright 1991 James H. Alleman

added to the network, each person has additional individuals they can now call. This is know as the network externality. It is used, inappropriately, to rationalize the subsidization of exchange service. As discussed below, this is inefficient and alternative methods can achieve the same result more efficiently and at a lower cost.

Cost/Production Analysis:

Fixed versus Variable Costs: A general rule for obtaining economic efficiency is to price fixed costs (usage invariant) with fixed prices. This is, in general, not done in the telephone industry, but the fixed cost is bundled in the various usage charges.

The fixed cost of concern is the subscriber's access or loop, discussed above. In general, the cost of connecting the subscriber line to the central office is fixed and invariant with usage. No matter how much or little the subscriber uses the system, the cost of this part of the system does not vary with the usage, but yet, in virtually all countries around the world, the monthly rental charge does not reflect this cost. Efficiency could be improved if did.

Relevant Costs: For the economic/management perspective, the relevant cost are the prospective (future) costs. Monies which have been spent are irrelevant for decisions about the level of investments and expenses in the future. That is not to say that the plant in place is not important when considering the new plant additions, but rather the cost of this "old" plant should not be considered. The relevant consideration should be: Will additions to plant be matched by additional revenues to cover both the plant cost and additional expenses incurred?

One relevant cost which is ignored by virtually all counties is the cost of electromagnetic spectrum. Spectrum is a valuable resource which is "given away," although it is clear that it is quite valuable. In the United States, many millionaires have been made by winning the "spectrum lottery", that is after having obtained a spectrum allocation, the "winners" are able to sell the business at many times the value of the other assets of the corporation. The residual represent the value the spectrum added to the enterprise. In the U.S. it is estimated that the government has given away billion of dollars worth of spectrum.

Joint and Common Costs: Joint and common costs are those cost incurred in the production of two or more products or services. An example would be the transmission of long distance and international call over the same facilities. The joint nature of the costs means that, however the costs are divided between services, the division is arbitrary. Because it is arbitrary, it is inappropriate to make pricing decisions only one of the services based on the allocation of these costs. It is more appropriate to base the price decision on the cost of the set of services which have a joint and/or common cost.

Accounting costs: Accounting costs can be very deceptive, since accounting cost, in most cases, involve arbitrary allocations of joint and common costs which can be allocated in a variety of ways as demonstrated in the *Primer on Telecommunications Pricing*, Appendix A. The utilization of capital over time is accounted for by depreciation. Many methods for this allocation are advocated -- all are arbitrary -- and none is necessarily right or wrong. Thus, caution is advised when examining these costs.

Integration of Cost and Price Analysis:

As indicated through out this document and empathize here, prices should be "marginally cost-based" in order to obtain economic efficiency. If they are not, the society is not obtaining the maximum amount of output as measured by individual willingness to pay.

Copyright 1991 James H. Alleman

In the best of all possible worlds, prices would be equal to marginal costs. This would provide the most efficient allocation of resources. Unfortunately, due to economies of scale and scope (see below), the firms would not be able to cover their costs if this were to obtain and they would eventually be forced out of business. To solve this dilemma a "second best" approach has been developed, known as *Ramsey Pricing*. In it simplest form, it states that the deviation of price from its associated marginal cost should be inversely proportional to its demand. The ideal is that those services that are most inelastic should be have their price raised more, since they will not lose as much consumers' surplus (and will not reduce their consumption as much) as the services which are elastic (or less inelastic).

If the firm exhibits economies of scale and scope, marginal cost pricing would costs the firm more than the revenue it would obtian. As indicated earlier, this is the point that the society would maximize or optimize its use of resources in the society.

In the single product case, the second best solution is to price at the point where price is equal to the average cost intercepts the demand curve -- it maximizes the consumers' surplus while still allowing the firm to cover its costs. It is the simple case of the Ramsey Pricing discussed above.

Equity Considerations:

Universal service is the promotion of high market penetration for exchange access. In the United States, universal service was promoted by pricing the service to all consumers below its cost. This was to account for the subscribers access externality discussed earlier. However, it is an inefficient method to accomplish the stated purpose. If it is desired to bring particular subscribers into the market who would not otherwise enter the market at the full cost, the better method is to target the subsidy to these potential consumers. If for example, the aim is to bring in the ten percent of families who are below the poverty line, then these families should be provided with the subsidy, not the other ninety percent of the consumers, as is done with a service subsidy.

Thus, a targeted or user subsidy is preferred, if a subsidy is provided by the firm. Other questions to address are: Why should the only the telephone service be subsidize? Should the telephone company provide the subsidy?

Role of Competition:

One of the principle methods for allocations of scarce resources is to allow the competitive market place to flourish. If a need is perceived or resources are used ineffectively, the market -- individuals or firms -- will seize upon these opportunities to correct the imbalance -- any firm or individual! Rather than a central authority ensuring that needs are meet, each person can take advantage of opportunities as they become available. This creates incentives for efficiency on the part of the firms in the market. If they become to sloppy, high cost or are not meeting the needs of the customers, the firms realizes that others may enter to take these markets away from them. The threat of entry -- not just the entry itself -- gives the firm incentive to be efficient.

Theory of Monopoly:

Definition: Under the old definition of a "natural" monopoly, all that was required was a economies of scale or declining average total costs. This implied that one firm could produce a produce or service cheaper than two firms who together produced the same amount. The new definition expands the idea of economies of scale to the multi-product (or multi-service) context. In the new definition, the firm must provide a set of products or services less than any other set of firms. Loosely speaking, the products must exhibit product specific economies of scale and economies of scope. Economies of scope occur if the joint production of, say

Copyright 1991 James H. Alleman

two goods, can be provided by one firm cheaper than two separate firms each producing the one of the goods. In other words, one firms can produce a set of goods (two or more) than can be produce by any other combination of firms producing the same set of goods. This firm is said to have a sub-additive production function.

Monopoly Issues: Monopolies price above marginal cost. In addition to pricing to make excessive profits, the monopolist constraint the amount of output it provides (in order to maintain its high price.) Because the firm is a monopoly, it may become sloppy in the manner in which it runs it business -- this is referred to as X-inefficiency. Since it is a monopoly, no market forces drive the firm to the most efficient means of production, X-inefficiency, gold-plating or over investment in capital may occur.

Economic policy should not allow *de jure* monopolies only *de facto* monopolies, because then the monopoly can not hide behind regulatory or legislative barriers to exclude competition if the conditions change, costs become too high or demand is not being met.

Input Distortion: Telecommunications is an intermediate product to all business -- some to a significant degree, the monopoly price distorts these firms supply function and the whole society losses output as indicted in the graph. In the United States it was estimated that the inappropriate price structure of the Bell System prior to divestiture cost the society a loss of over one Billion dollars (1983 dollars) a year (year after year).

The Economics of Regulation:

Control of a monopoly is essential, particularly if the monopoly controls essential products or services. This section reviews various methods of the regulation.

Rate of Return Regulation: The most common form of monopoly control (where the monopoly is not government owned and controlled) is rate of return (or rate base) regulation. The regulators concur with the magnitude and type of investments and expenditures of the firm and control the return on investment capital of the firm. This combination of factors determines the total cost of the firm as defined by the regulators and is known as the revenue requirement.

While rate of return regulation has initial appeal, several problems occur in practice:

- Determining the capital stock is not easy.
- Determining the "correct" rate of return is also difficult
- The firm is incented to over-capitalize and cross subside competitive markets. (Know as the Averch-Johnson effect.)
- The rate structure is not always addressed in this process.

Provision of Essential Service: While many industries argue they should be protected because they are "natural" monopolies, extreme caution should be used before granting such protection. If the firm is truly "natural" monopoly, as we saw above, it does not need protection of any kind, unless its price structure is inappropriate. And, as we have also seen, if the price structure is not correct, inefficiencies result. Thus, the monopoly can improve efficiency if it moves to the appropriate price structure and not need regulatory or legislative protection.

The economic literature indicates that the best method of controlling monopolies is to allow competition to enter the monopolist market. It is the threat of this competitive entry which drives the monopolist to the least cost production and the correct price structure. Competition is the preferred regulatory instrument. The threat of competition forces desired behavior on the monopoly.

Copyright 1991 James H. Alleman

Incentive Regulation: A relatively new method of regulation is know as incentive or (price cap) regulation. The idea of this method is to allow the firm to have a certain amount of price flexibility within services, but it can not raise the weighted average of its rates by more that the consumers' price index (CPI) less a factor for total factor productivity (TFP) gains. The firm, thus, is incented to do at least as well as the CPI - TFP. If it does better, it is allowed to keep the gain. It can be shown that the TFP can be determined outside the firm and the regulatory context. Thus, the standard is based on exogenous factors. The regulator only acts as a monitor in insure the firm follows the rules. This form of regulation appears to be desirable, however, in its practice, it has not followed this ideal form.

Cautions and Failures: However, certain caution are advived. In my view, the division the cellular market in the U.S. into two carriers (a duopoly) was not and is not successful. Only allowing two carriers in the United Kingdom market has not been as successful as it could have been. Competition means anyone can enter the market. Controlled duopoly is not the same.

The Theory of Privatization:

While the paper has not been able to dwell on privatization, the underlying thrust has been an assumption that the privatized firms are more desirable than government operated enterprises. The incentive structure produces better results for the consumers of the good or service and the society is unequivocally better off.

The benefits of privatization are in the efficiency of the work force, the enterprises sensitivity and responsiveness to the market and its customers. This brief overview of economic and regulatory theory has suggested the means by which the monopolies -- know as the telephone companies -- can be controlled when they are privatized. Privatization, alone, is not a panacea, but must be implement with a firm control on the undesirable elements of the monopoly. We hope this summary will serve as a guide to this end.

Copyright 1991 James H. Alleman

TELECOMMUNICATIONS ECONOMICS:

A GUIDE TO POLICY OPTIONS IN THE

TELECOMMUNICATIONS SECTOR IN EASTERN EUROPE

OVERHEADS

James H. Alleman

University of Colorado
&
PNR & Associates

September 21, 1991

PNR & ASSOCIATES
Suite 4
4840 Riverbend Road
Boulder, CO 80301

The Economics of Telecommunication:
A Focus on Telephony

Copyright 1991
James Alleman

Previous Page Blank

Agenda

- Economic Theory
- Case Study
- The Economics of Regulation
- Theory of Privatization

Telecommunications Economics

Economic Efficiency

Demand Analysis

Cost/Production Analysis

Integration of Cost and Price Analysis

Equity Considerations

Role of Competition

Theory of Monopoly

International Settlements: An Application

Copyright 1991 James H Alleman

The Basics: Supply and Demand

Resource Allocation

Theory of the Firm

Welfare Analysis

The Role of Competition

Economic Efficiency

Economic efficiency leads to optimal resource allocation in the society i.e. resources should be used in the most optimal manner. A desirable goal is to obtain economic efficiency in the telecommunications industry.

Economic Efficiency is obtained by:

Telephone prices based on (marginal) cost causality:

Fixed costs should be charged at a fixed price -- not usage sensitive prices

Usage sensitive costs should have usage sensitive rates.

Defining Telephone service correctly.

Avoiding Cross Subsidies

Targeted Subsides are preferred to Service Subsidies, if used at all.

Subsides should not be financed through the rate structure, but directly by government.

Competition is the most important tool in the control of a "monopoly"

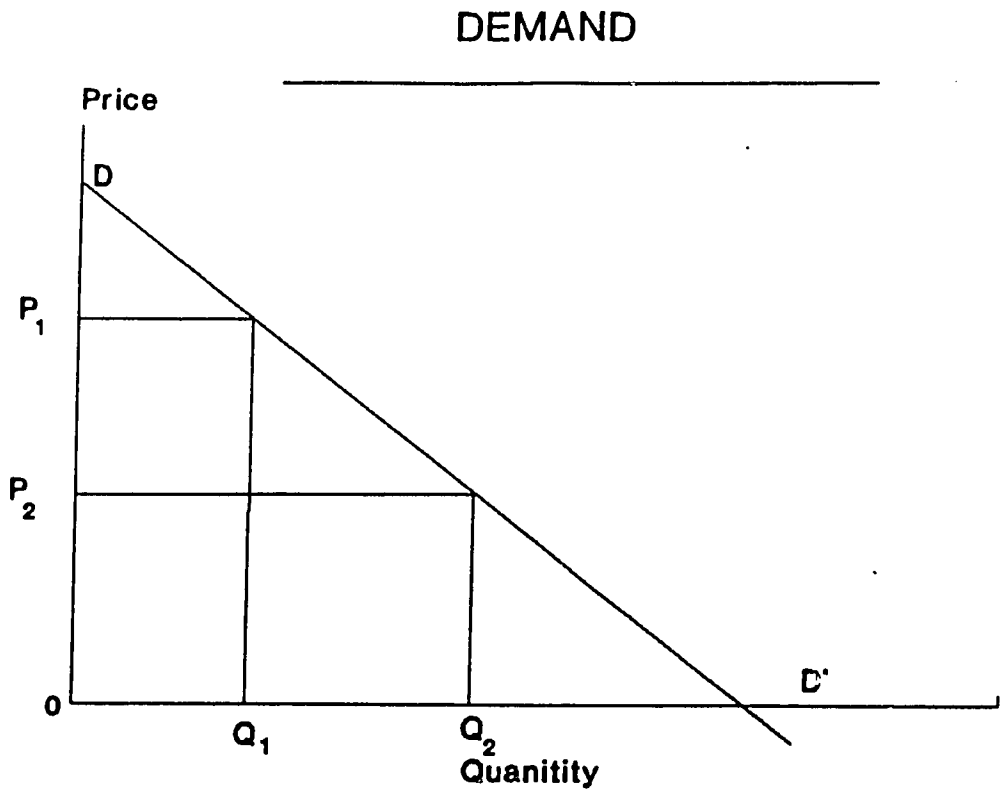

Demand:

The demand curve expresses the relationship between price and quantity of the service (or good) sold. It represents what the consumer is willing to pay at various prices.

Consumer Surplus

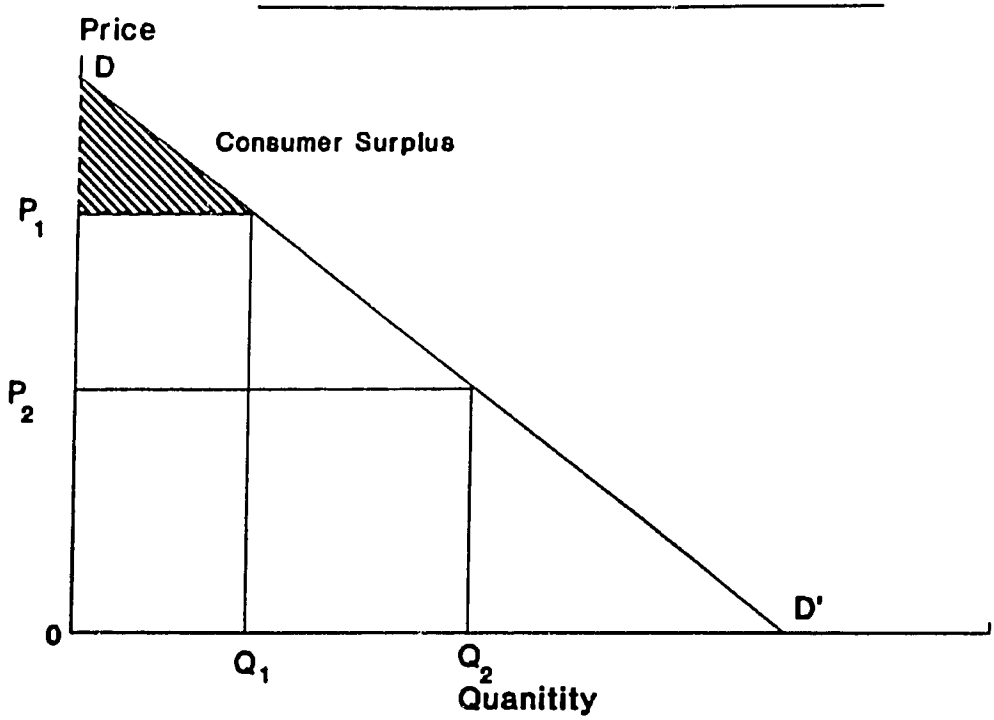

Consumer Surplus:

The triangular area above the demand curve represents the "extra" value a consumer receives because of the price is P_1. Changes in consumers' Surplus are important because it measures the value of a variety of policy alternatives.

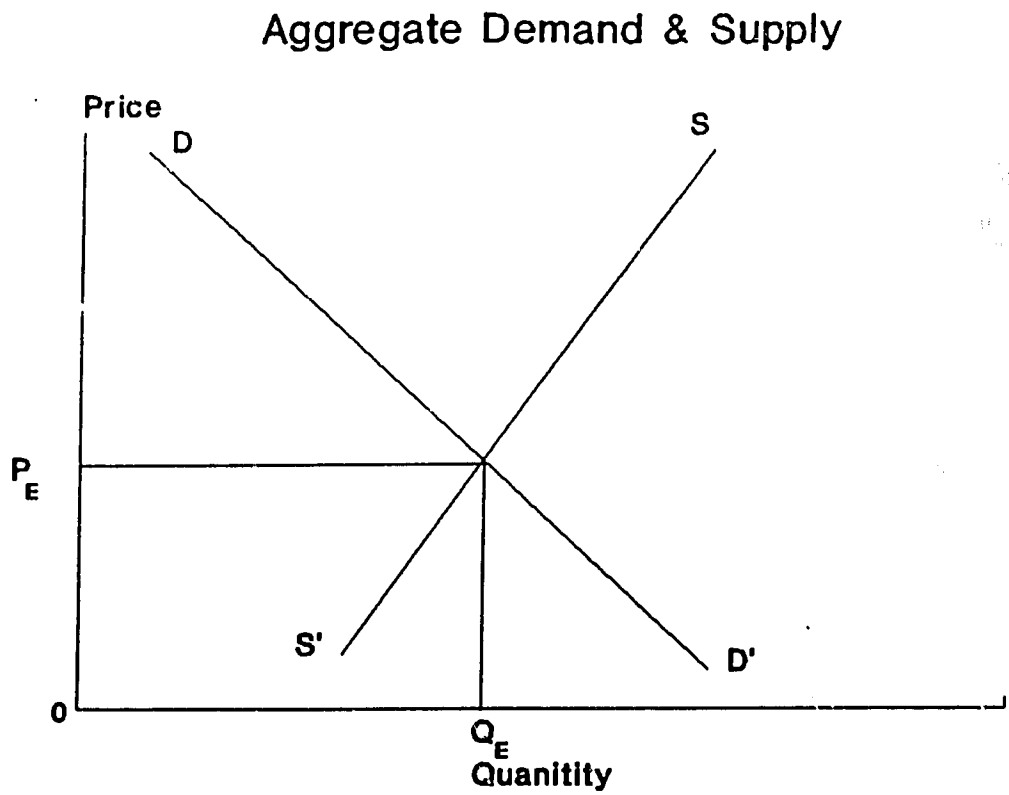

Aggregate Demand & Supply:

The individual demand curves can be aggregated (summed up) to indicated the total amount consumers are willing to pay. The supply curve, on the other hand, represents the amount the producers are willing to provide at various prices. Voluntary exchange will result in all parties being satisfied.

Equilibrium is reached at the price P_E with Q_E of the service being sold.

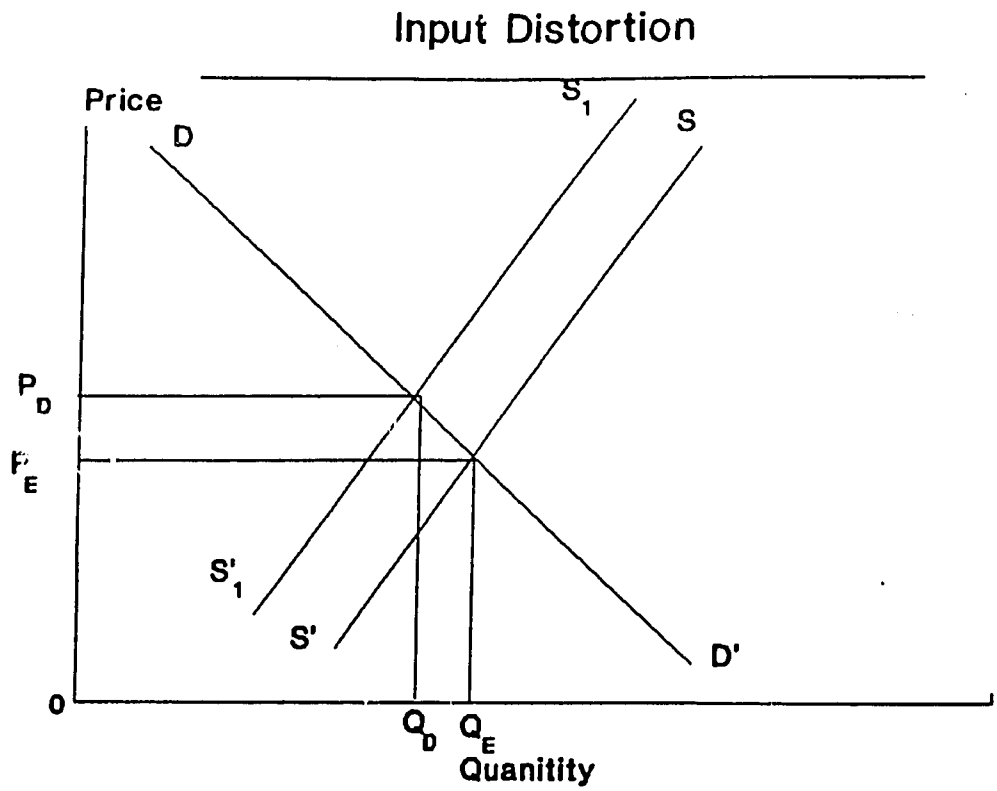

Input distortions:

Input distortions can be product by a variety of "market failures." This has the impact of shifting the supply curve upward and to the left, reducing the amount of goods and service available to the society and results in a welfare loss. The particular case we will examine later is that distortion caused by monopoly pricing.

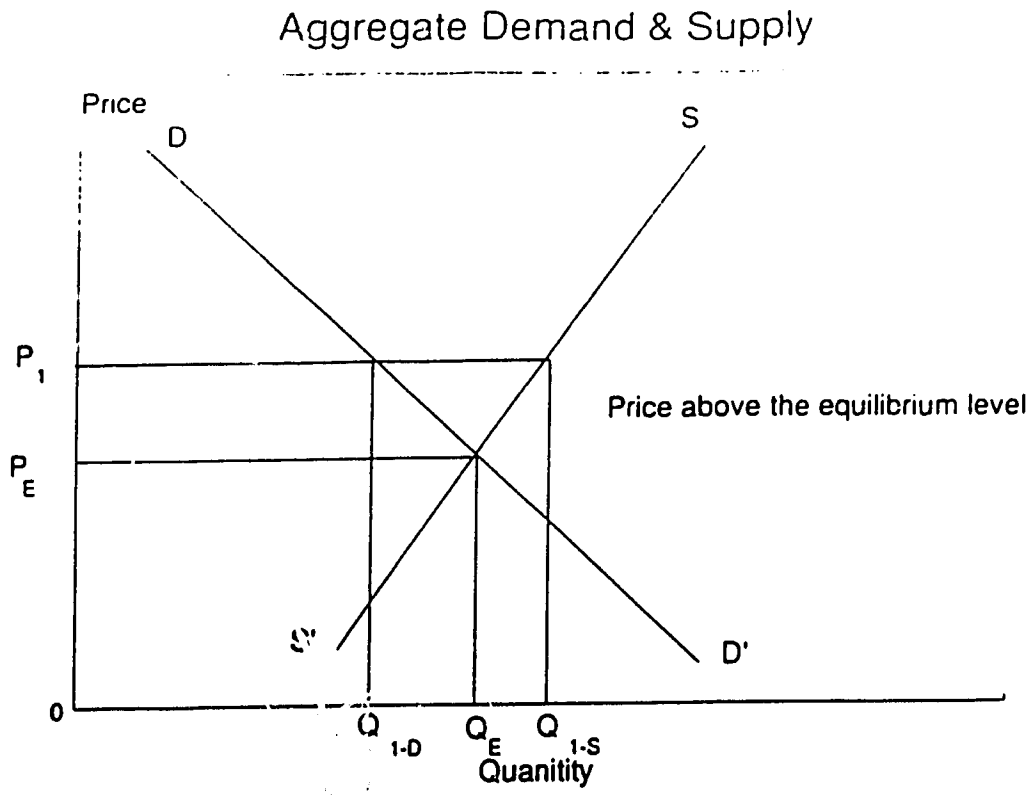

Aggregate Demand & Supply (2):

If the price is too high, consumers will not purchase all that supplier will want to provide. Therefore, in the case of a free market, suppliers can bid down the price -- remove inventories, etc., in order to sell their service. The reduction in price will be reached at P_E.

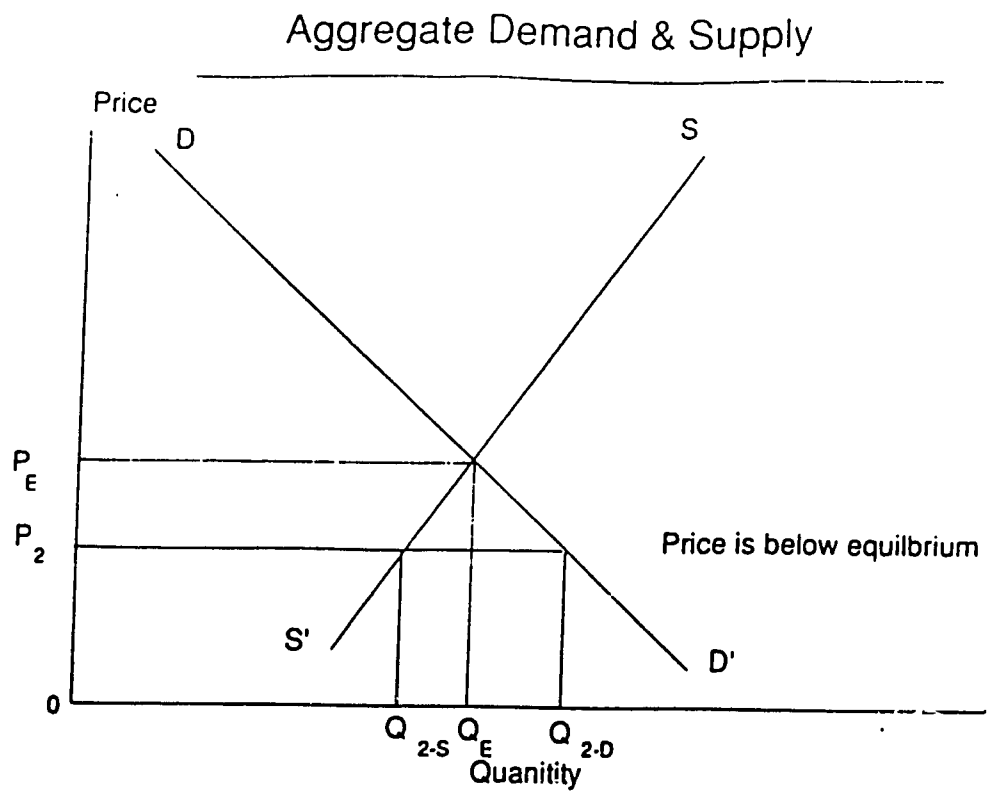

Aggregate Demand & Supply (3):

Conversely, if the price is too low, the consumer will not have sufficient service available to them, and they will bid up the price. In both cases, the price will settle at P_E.

Demand Analysis
The Demand for Telecommunications

Defining the Service/Product

Subscriber Access, Individuals

Usage Demand, Individuals

Externalities

Market Demand

Demand Analysis:

The definition of the various telecommunication services is critical to the correct analysis of costs and its role in the pricing of telecommunication services. *Subscriber access* is the ability to make a call of any type, and generally its cost is fixed and invariant with usage. It represents the connection from the home or office to the telephone companies central office. However, the usual manner telephone service is defined is by "local" and long distance. This is incorrect, and seriously distorts the price structure and, hence the allocation of resources.
The demand for subscriber access is only because of the ability to use the system -- it is derived from the individual's desire to make and receive telephone calls.

The individual demands can to aggregated into the market demand curves as indicated earlier. Telephone service has the property, however, that it is more valuable to each and every subscriber if additional subscribers join the network. This is know as the network externality and will be discussed in a few moments.

Copyright 1991 James H. Allemen

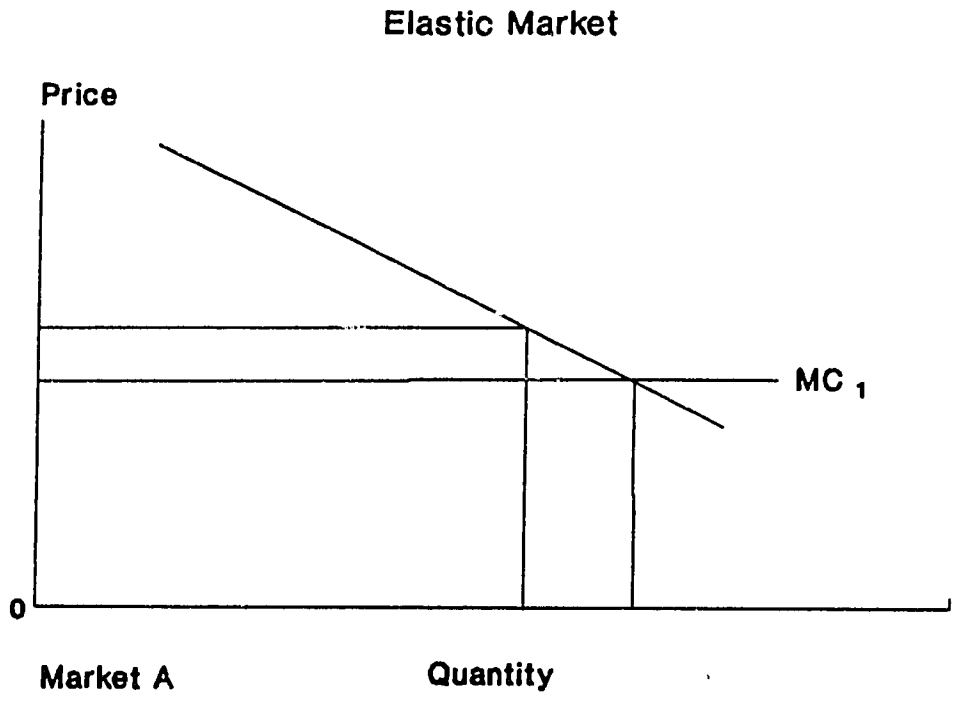

Elastic Market:

The salient features of demand curves are their sensitivity to price changes. If demand is elastic, a decrease in price will raise the total revenue produced (the area represented by the rectangle formed by the price quantity lines.)

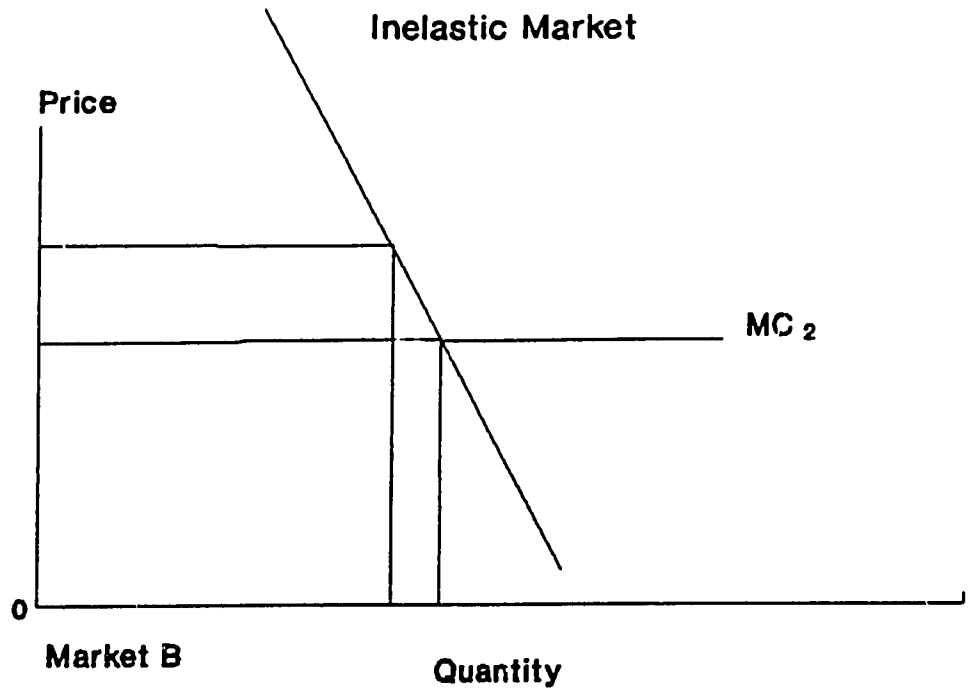

Inelastic Market:

The opposite situation occurs if a market is inelastic, namely, a price decrease will produce a decline in revenue. The comparison of these two cases is shown in the next slide.

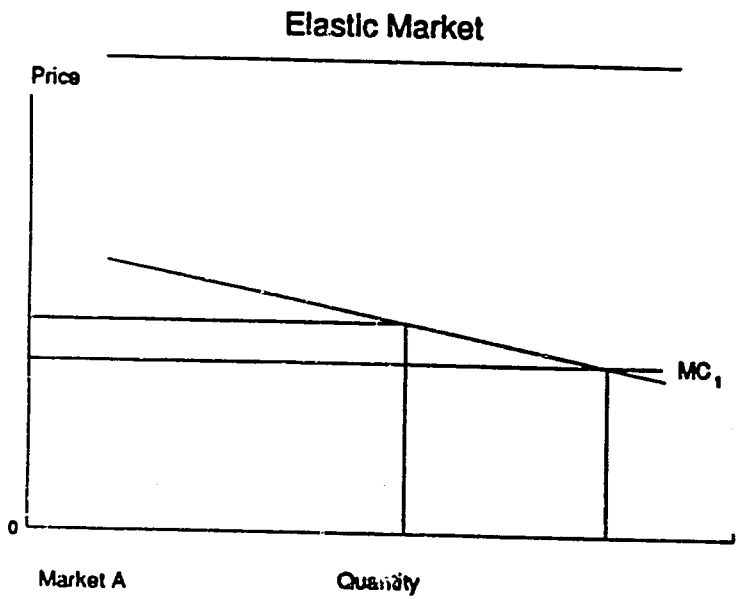
Elastic Market
Price
MC 1
0
Market A
Quantity

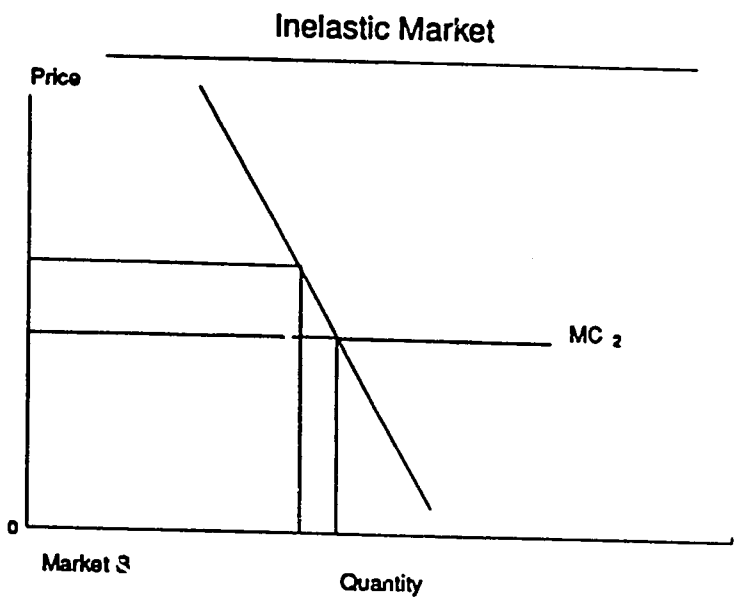
Inelastic Market
Price
MC 2
0
Market B
Quantity

Elasticity

$$E = \frac{\% \ dQ}{\% \ dP}$$

$$= \frac{d \ln P}{d \ln Q} = \frac{dQ}{dP} \cdot \frac{P}{Q}$$

or
the percentage change in quantity
divided by the percentage change in price

Elasticity:

The formal definition of the price elasticity is the ratio of the percentage change in quantify to the percentage change in price. Although price elasticities are always negative, due to the downward sloping demand curve, some people will discuss the price elasticity as positive numbers. We will avoid this practice.

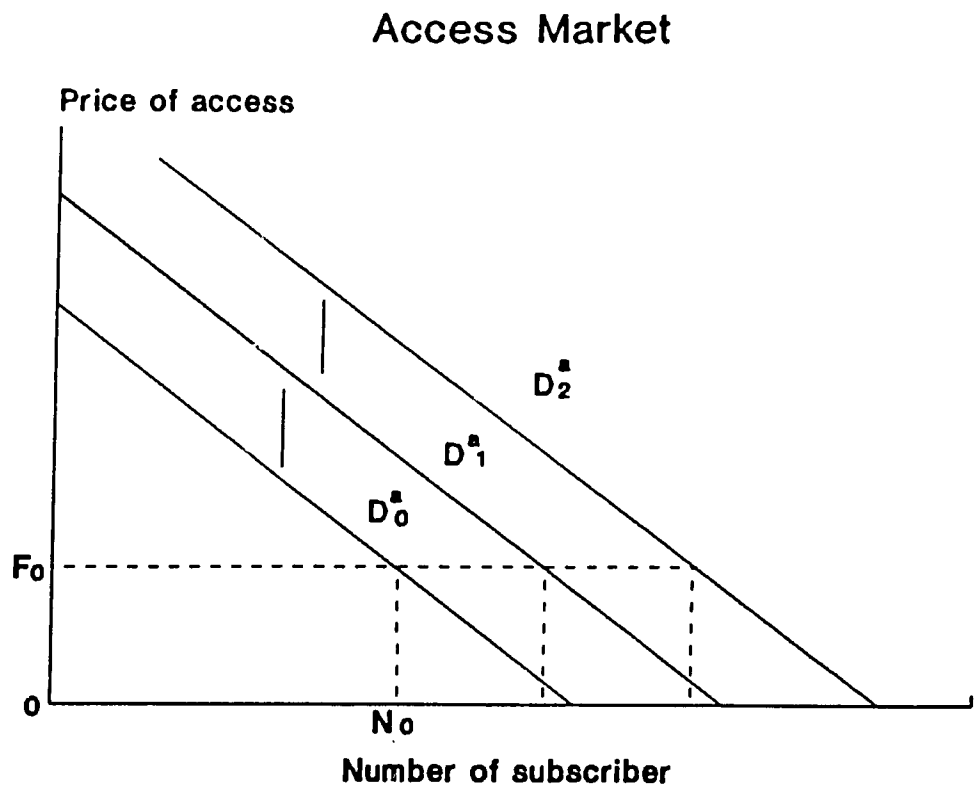

Access Market:

The market for subscriber access is somewhat unique in that as more subscribers are added, the value of the service is increased. The reason is straight forward -- as additional subscribers are added to the network, each person has additional individuals they can now call. This is know as the network externality. It is used, inappropriately, to rationalize the subsidization of exchange service. As discussed below, this is inefficient and alternative methods can achieve the same result more efficiently and at a lower cost.

The effect of this externality is illustrated by the outward shift of the demand curve.

Cost/Production Analysis

Fixed versus Variable Costs

Relevant Telecommunications Costs

Irrelevant Telecommunication Costs

Cost/Production Analysis (1 & 2):

Fixed versus Variable Costs: A general rule for obtaining economic efficiency is to price fixed costs (usage invariant) with fixed prices. This is, in general not done in the telephone industry, but the fixed cost is bundled in the various usage charges.

The fixed cost of interest is the subscriber's access or loop, discussed above. In general, the cost of connecting the subscriber line to the central office is fixed and invariant with usage. No matter how much or little the subscriber uses the system, the cost of this part of the system does not vary with the usage, but yet, in virtually all countries around the world, the monthly rental charge does not reflect this cost. Efficiency could be improved if did.

Relevant Costs: For the economic/management perspective, the relevant cost are the prospective (future) costs. Monies which have been spent are irrelevant for decisions about the level of investments and expenses in the future. That is not to say that the plant in place is not important when considering the new plant additions, but rather the cost of this "old" plant should not be considered. The relevant consideration should be: Will additions to plant be matched by additional revenues to cover both the plant cost and additional expenses incurred?

One relevant cost which is ignored by virtually all counties is the cost of electromagnetic spectrum. Spectrum is a valuable resource which is "given away," although it is clear that it is quite valuable. In the United States, many millionaires have been made by winning the "spectrum lottery", that is after having obtained a spectrum allocation, the "winners" are able to sell the business at many times the value of the other assets of the corporation. The residual represent the value the spectrum added to the enterprise. In the U.S. it is estimated that the government has given away billion of dollars worth of spectrum.

Relevant Telecommunications Costs
- Prospective (Future) Costs
- Joint/Common Costs Problem
- Spectrum "Costs"

Irrelevant Telecommunication Costs
- Historic Costs
- Sunk Costs
- Beware of Accounting Costs

Joint and Common Costs: Joint and common costs are those cost incurred in the production of two or more products or services. An example would be the transmission of long distance and international call over the same facilities. The joint nature of the costs means that, however the costs are divided between services, the division is arbitrary. Because it is arbitrary, it is inappropriate to make pricing decisions only one of the services based on the allocation of these costs. It is more appropriate to base the price decision on the cost of the set of services which have a joint and/or common cost.

Irrelevant Costs: As indicted above, historical costs should not be a consideration in management decisions. Sunk costs are the same as historic costs.

Accounting costs: Accounting costs can be very deceptive, since accounting cost, in most cases, involve arbitrary allocations of joint and common costs which can be allocated in a variety of ways as demonstrated in the *Primer on Telecommunications Pricing*, Appendix A. The utilization of capital over time is accounted for by depreciation. Many methods for this allocation are advocated -- all are arbitrary -- and none is necessarily right or wrong. Thus, caution is advised when examining these costs.

The Role of Costs in Pricing

Marginal Cost Pricing

Ramsey Pricing

Other Alternatives

Integration of Cost and Price Analysis:

As indicated through out this document and empathize here, prices should be "marginally cost-based" in order to obtain economic efficiency. If they are not, the society is not obtaining the maximum amount of output as measured by individual willingness to pay.

In the best of all possible worlds, prices would be equal to marginal costs. This would provide the most efficient allocation of resources. Unfortunately, due to economies of scale and scope (see below), the firms would not be able to cover their costs if this were to obtain and they would eventually be forced out of business. To solve this dilemma a "second best" approach has been developed, known as ***Ramsey Pricing***. In it simplest form, it states that the deviation of price from its associated marginal cost should be inversely proportional to its demand. The ideal is that those services that are most inelastic should be have their price raised more, since they will not lose as much consumers' surplus (and will not reduce their consumption as much) as the services which are elastic (or less inelastic).

Average Cost vs. Marginal Cost

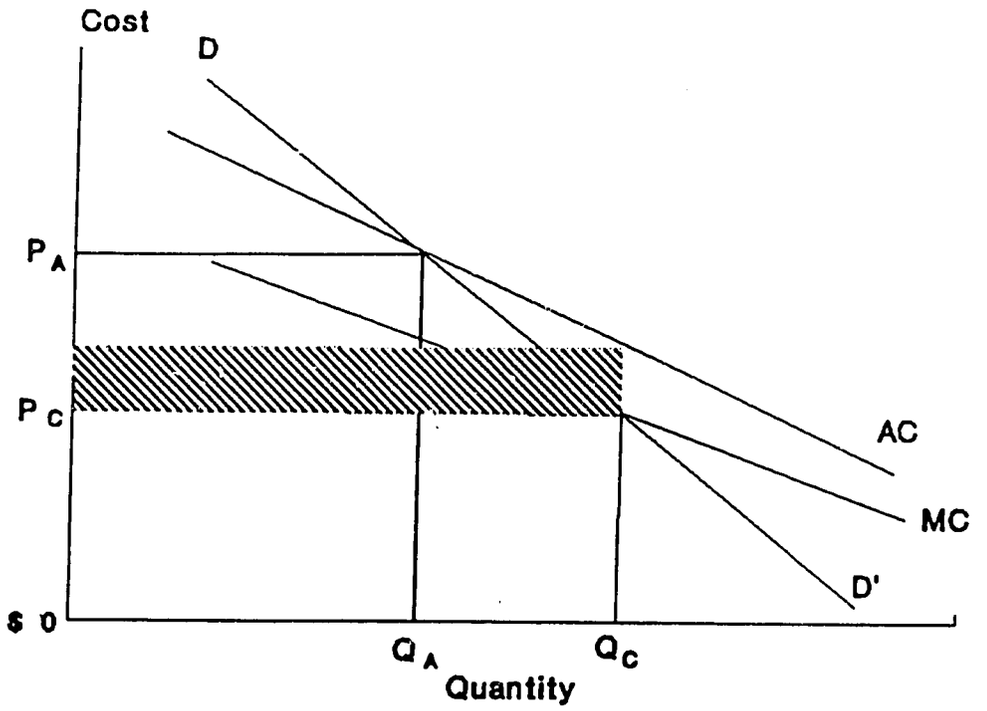

Average Cost versus Marginal Cost:

Marginal cost pricing would only allows the firm to earn P_c*Q_c (the rectangular area), but it costs the firm the C_c*Q_c to produce this quantity. As indicated earlier, this is the point that the society would maximize or optimize its use of resources in the society. The loss is represented by the rectangular area bounded by the dotted lines. The declining average cost curve is the result of economies of scale.

In this single product case, the second best solution is to price at the point where price is equal to the average cost intercepts the demand curve -- it maximizes the consumers' surplus while still allowing the firm to cover its costs. It is the simple case of the Ramsey Pricing discussed above.

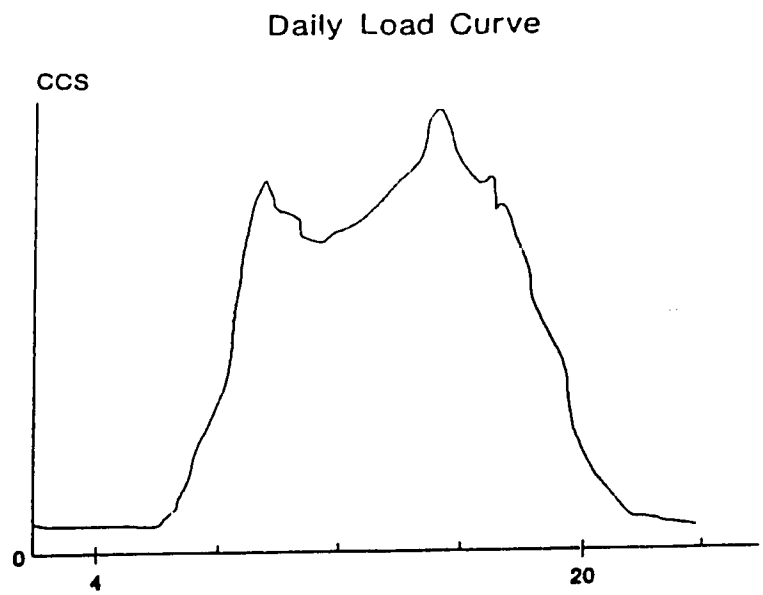

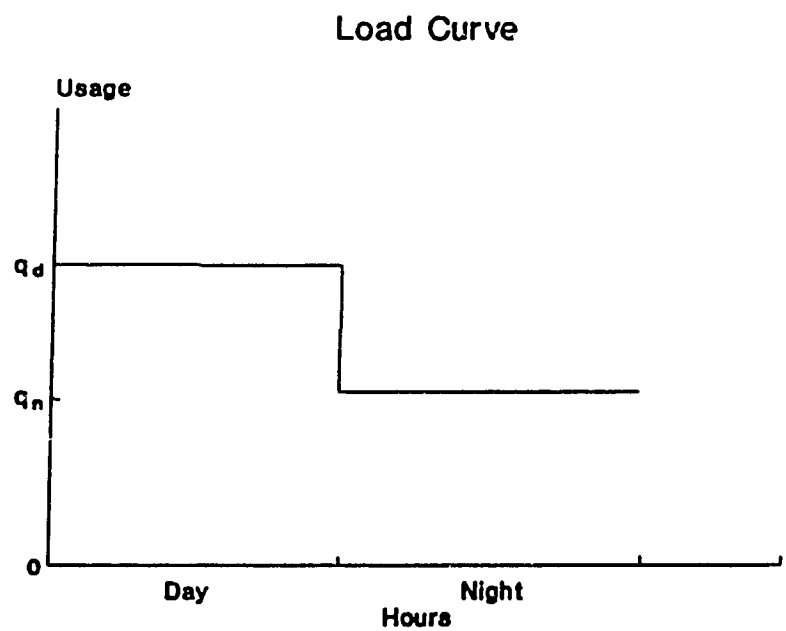

Daily Load Curve & Load Curve:

The next two slides illustrate, respectively, a typical telephone traffic load curve and the characterization of the daily load curve to illustrate the a simple two period pricing in the next two graphs.

Average Cost Pricing

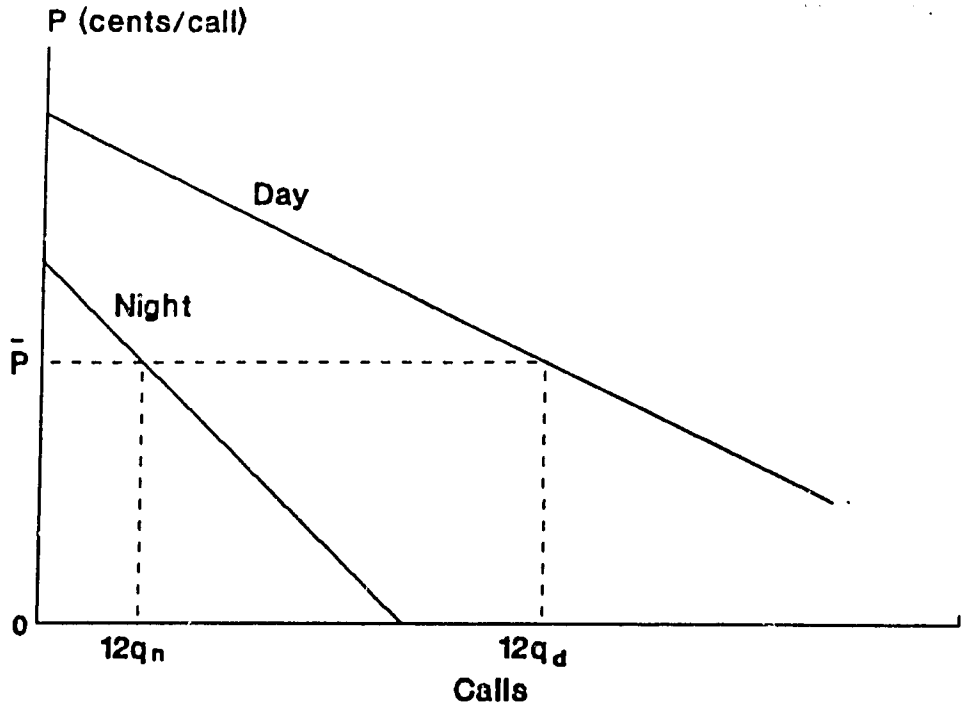

Average Cost Pricing:

If the firm prices at average cost over two periods for the case in which investment is required to meet the peak load, but averaged over both periods, more efficient pricing can be obtained. This practice generates an implicate cross subsidy exist between the day users and night users, with the night users subsidizing the heavier-using, day traffic consumers. If the day call demand were the same as the night, addition investment would not be required.

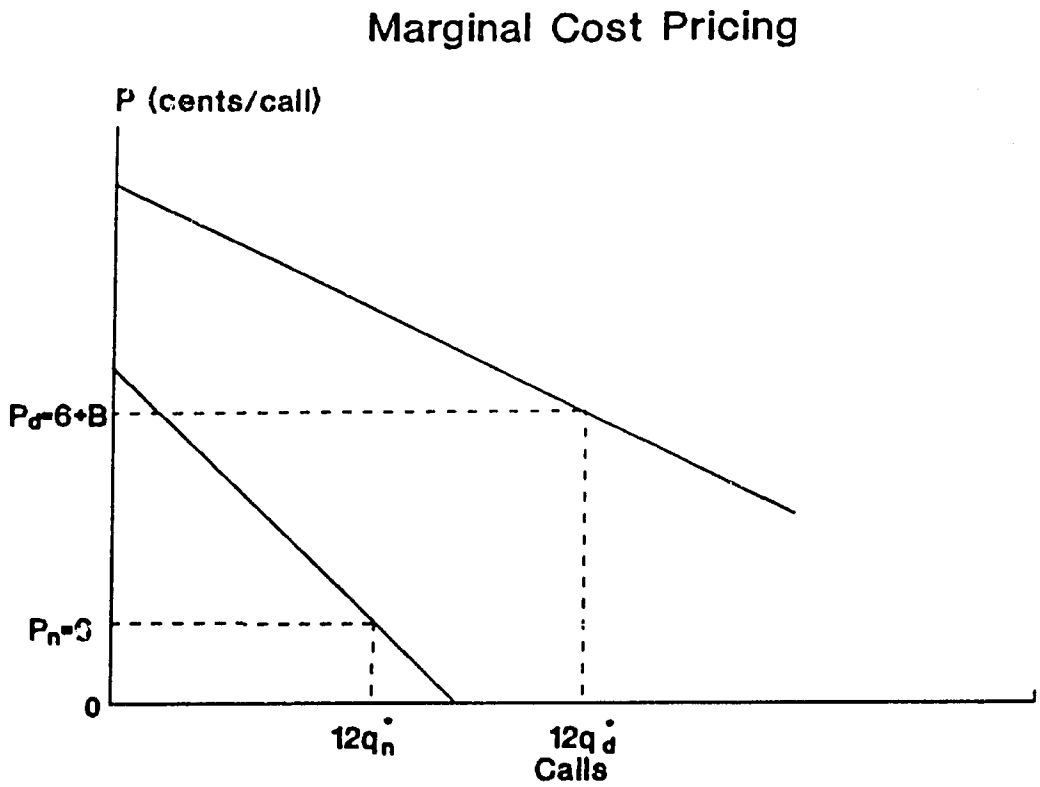

Marginal Cost Pricing:

This graph represent the price the two periods based on their respective costs. The night consumers are not covering any of the extra investment required to provided to meet the day consumers demand. The subsidy is eliminated. The marginal cost of the investment for the day demand is covered by the day consumers.

Equity Considerations

Universal Service

User Subsidy versus Service Subsidy

Equity Considerations:

Universal service is the promotion of high market penetration for exchange access. In the United States, universal service was promoted by pricing the service to all consumers below its cost. This was to account for the subscribers access externality discussed earlier. However, it is an inefficient method to accomplish the stated purpose. If it is desired to bring particular subscribers into the market who would not otherwise enter the market at the full cost, the better method is to target the subsidy to these potential consumers. If for example, the aim is to bring in the ten percent of families who are below the poverty line, then these families should be provided with the subsidy, not the other ninety percent of the consumers, as is done with a service subsidy.

Thus, a targeted or user subsidy is preferred, if a subsidy is provided by the firm. Other questions to address are: Why should the only the telephone service be subsidize? Should the telephone company provide the subsidy?

The Theory of Privatization

Necessary and Sufficient Conditions

Benefits of Privatization

Trade-Offs

The Theory of Privatization:

While the seminar has not been able to dwell on privatization, the underlying thrust has been an assumption that the privatized firms are more desirable than government operated enterprises. The incentive structure produces better results for the consumers of the good or service and the society is unequivocally better off.

The benefits of privatization are in the efficiency of the work force, the enterprises sensitivity and responsiveness to the market and its customers. This brief overview of economic and regulatory theory has suggested the means by which the monopolies -- know as the telephone companies -- can be controlled when they are privatized. Privatization, alone, is not a panacea, but must be implement with a firm control on the undesirable elements of the monopoly. We hope this summary will serve as a guide to this end.

Role of Competition

Allocation of Scarce Resources

Incentive for Efficiency

Discipline of the Threat of Entry

Role of Competition:

One of the principle methods for allocations of scarce resources is to allow the competitive market place to flourish. If a need is perceived or resources are used ineffectively, the market -- individuals or firms -- will seize upon these opportunities to correct the imbalance -- any firm or individual! Rather than a central authority ensuring that needs are meet, each person can take advantage of opportunities as they become available. This creates incentives for efficiency on the part of the firms in the market. If they become to sloppy, high cost or are not meeting the needs of the customers, the firms realizes that others may enter to take these markets away from them. The threat of entry -- not just the entry itself -- gives the firm incentive to be efficient.

Theory of Monopoly

Definition

Pricing Practices

Constraint of Output

X-Inefficiency

Sustainability of a Monoply

De jure versus *de facto* Monopolies

Theory of Monopoly:

The first slide in this series outlines those to come.

Old: Economies of Scale

New: Sub-additivity

Definition:

Under the old definition of a "natural" monopoly, all that was required was a economies of scale or declining average total costs. This implied that one firm could produce a produce or service cheaper than two firms who together produced the same amount. The new definition expands the idea of economies of scale to the multiproduct (or multiservice) context. In the new definition, the firm must provide a set of products or services less than any other set of firms. Loosely speaking, the products must exhibit product specific economies of scale and economies of scope. Economies of scope occur if the joint production of, say two goods, can be provided by one firm cheaper than two separate firms each producing the one of the goods. In other words, one firms can produce a set of goods (two or more) than can be produce by any other combination of firms producing the same set of goods. This firm is said to have a sub-additive production function.

Pricing Practices

Constraint of Output

X-Inefficiency

Monopoly Issues:

The pricing practices of a monopoly are illustrated in the following graph. In addition to pricing to make excessive profits, the monopolist constraint the amount of output it provides (in order to maintain its high price.)
Because the firm is a monopoly, it may become sloppy in the manner in which it runs it business -- this is referred to as X-inefficiency. Since it is a monopoly, no market forces drive the firm to the most efficient means of production, X-inefficiency, gold-plating or over investment in capital may occur.

Monopoly

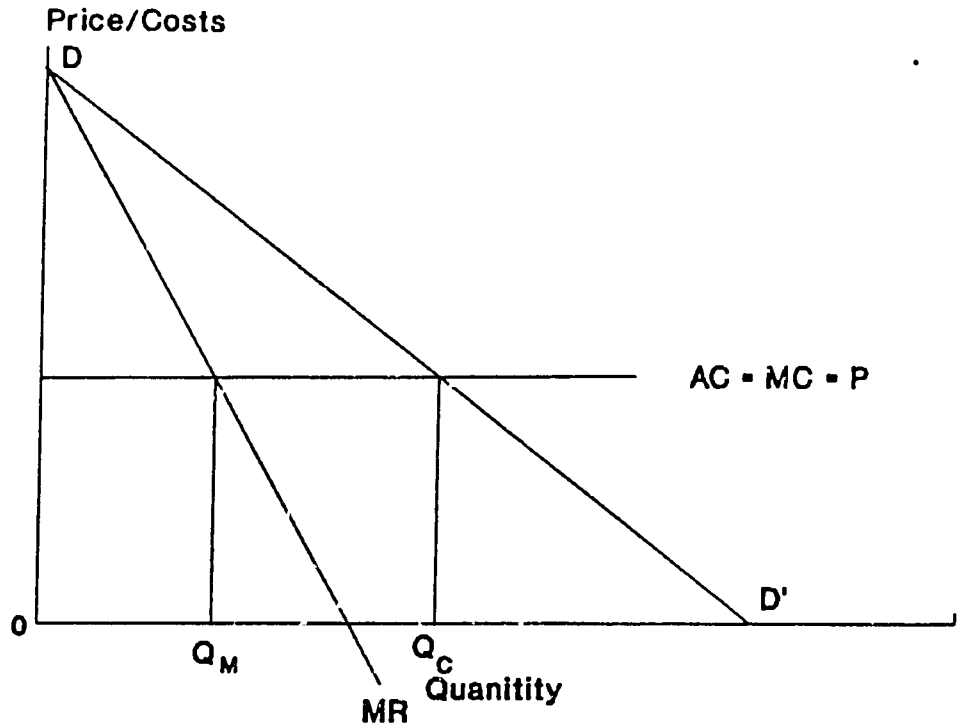

Monopoly:

This diagram shows the amount the price of the product is raised above it cost, indicated by the constant average and marginal cost curve labeled AC=MC. P_c represent the price which would be charged if the firm priced as if it were in a competitive market. It illustrates the amount of both the price rise above the competitive level and the amount of output constrained by the monopolist from the competitive level.

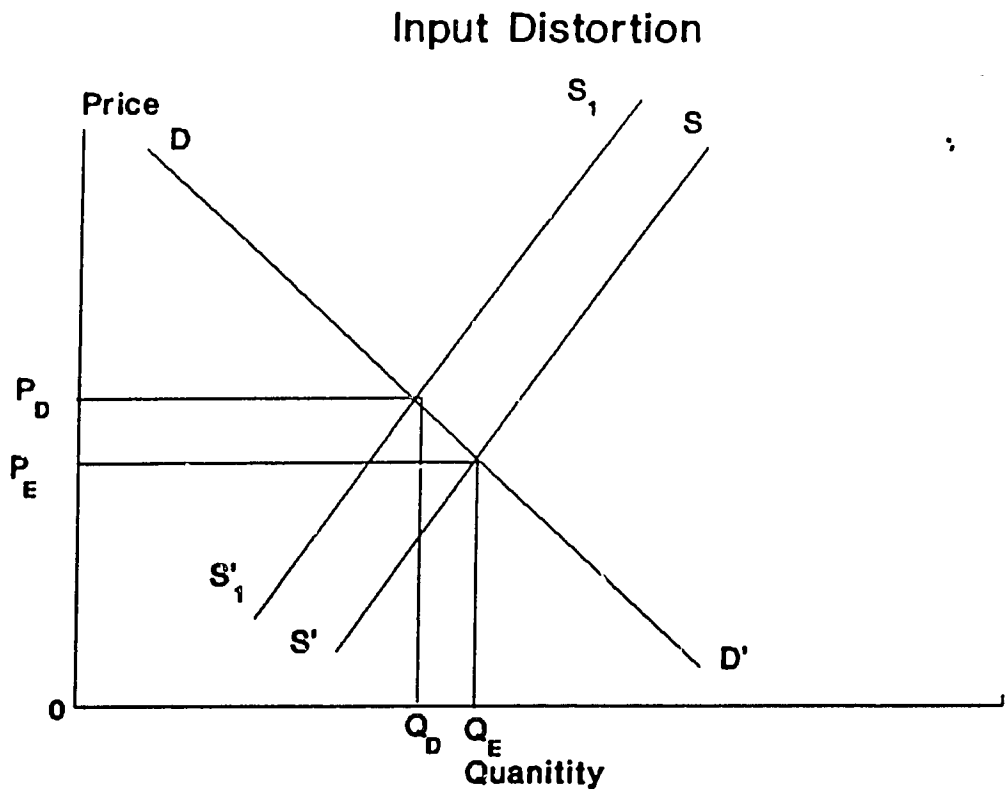

Input Distortion:

If telecommunications is an intermediate product, which it is to all business -- some to a significant degree, the monopoly price distorts these firms supply function and the whole society losses output as indicted in the graph. In the United States it was estimated that the inappropriate price structure of the Bell System prior to divestiture cost the society a loss of over one Billion dollars (1983 dollars) a year (year after year).

Sustainabliity of a Monopoly

De jure versus de facto Monopolies

If Economies of Scale and Scope existed, why would a firm want (or need) to keep out competition?

Monopoly Issues:

It has been argued that some monopolies, although they meet all the characteristics of a natural monopoly would not be sustainable. This seems to be an exceptional case (shown in the next slide), and has not been demonstrated empirically. Economic policy should not allow *de jude* monopolies only *de facto* monopolies, because then the monopoly can not hide behind regulatory or legislative barriers to exclude competition if the conditions change, costs become too high or demand is not being met.

An example of nonsustainable natural monopoly

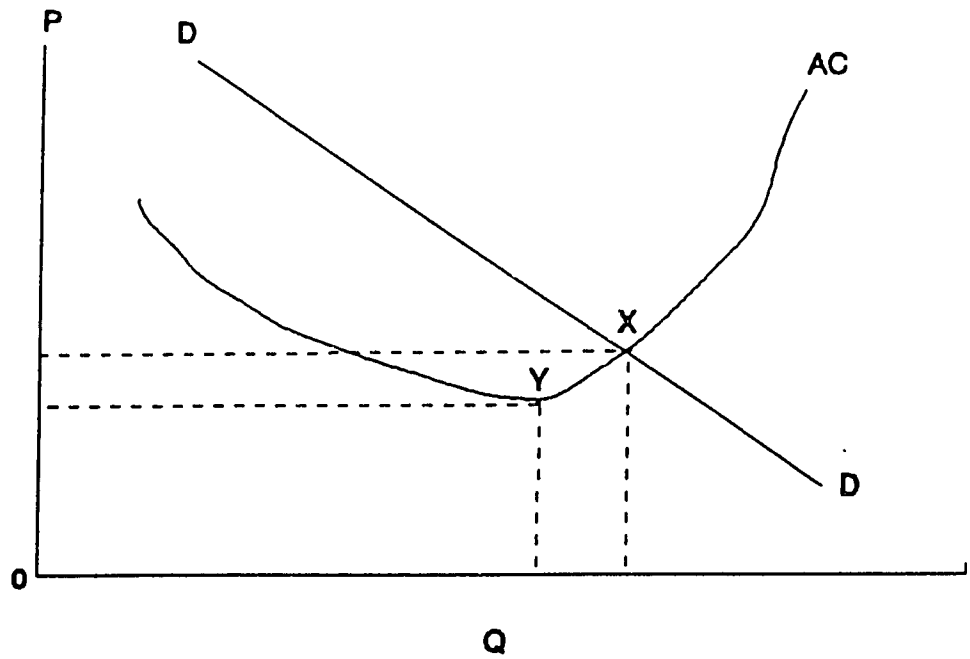

An example of a nonsustainable natural monopoly:

This figure demonstrates the rare case of an unsustainable natural monopoly.

International Settlements: An Application

Background/Definitions

The Role of Prices

A Two Country Simulation Model

International Settlements: An Application

This and the following slides on the international settlements process are self explanatory.

INTELSIM

International Center for Telecommunications Management

- 121 - Previous Page Blank

The Deficit Grows Larger

The deficit has been growing at an accelerated rate for the last decade.

International Telephone Trade Deficit

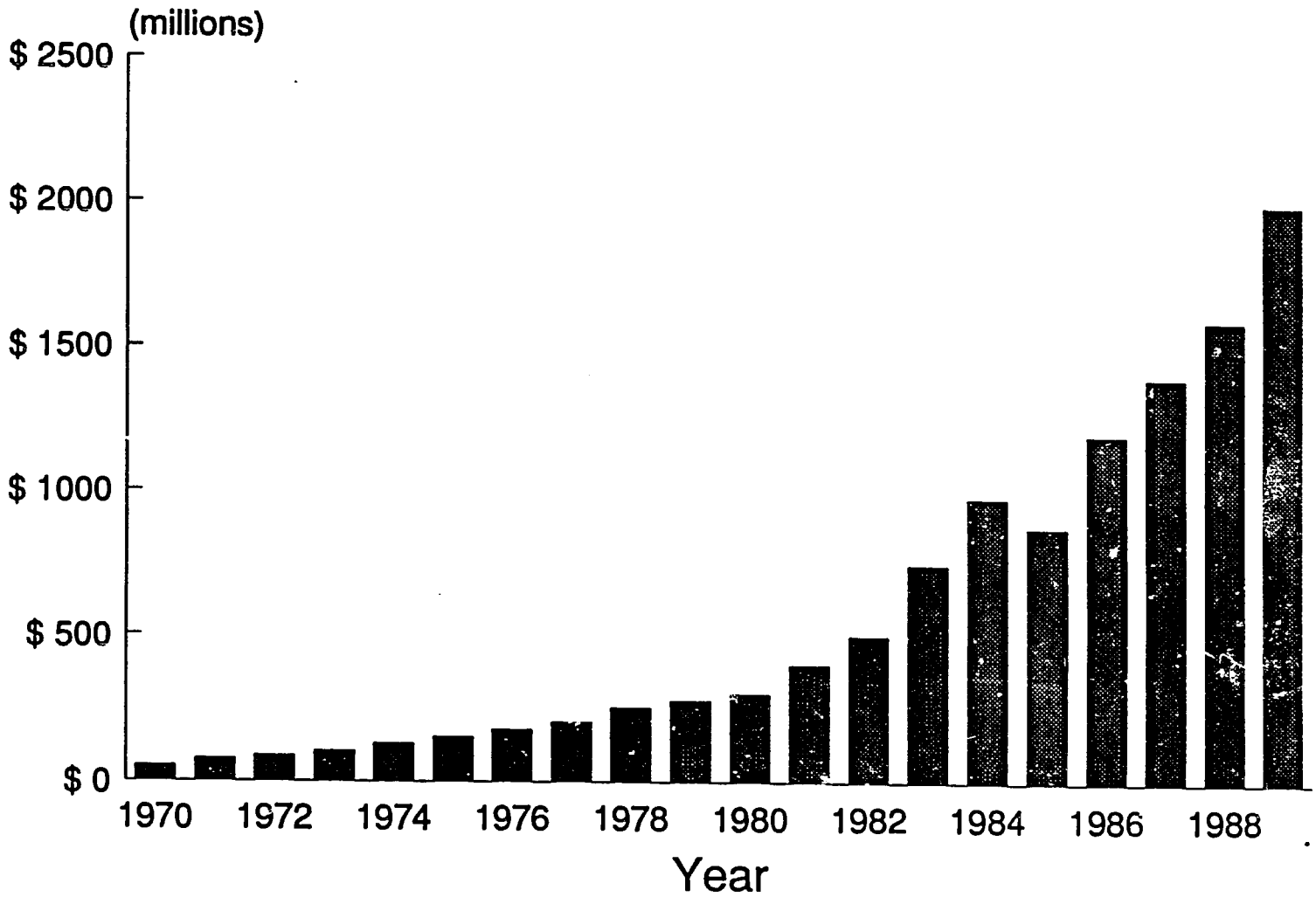

Data excludes Canada and Mexico.
Source: Balance of Payments Deficit

Developed Countries Gain

- Countries receiving the largest shares are NOT the developing countries.

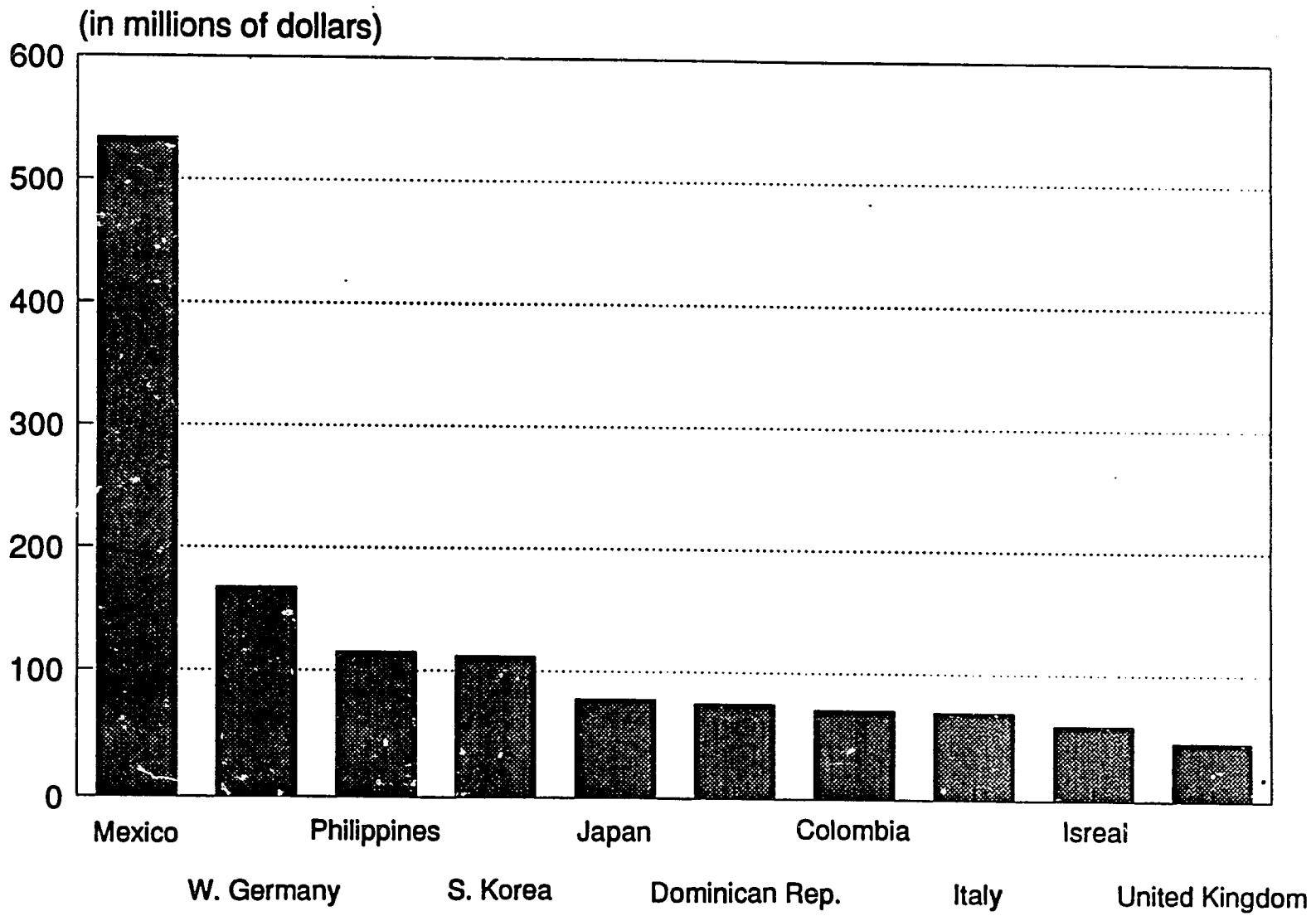
(in millions of dollars)
600
500
400
300
200
100
0
Mexico
W. Germany
Philippines
S. Korea
Japan
Dominican Rep.
Colombia
Italy
Isreal
United Kingdom

TELECOMMUNICATIONS REVENUES

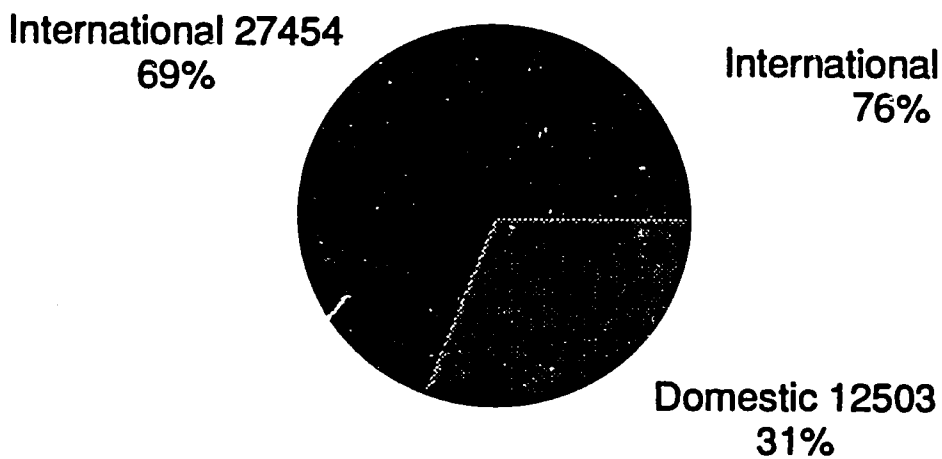

Jordan (1985)

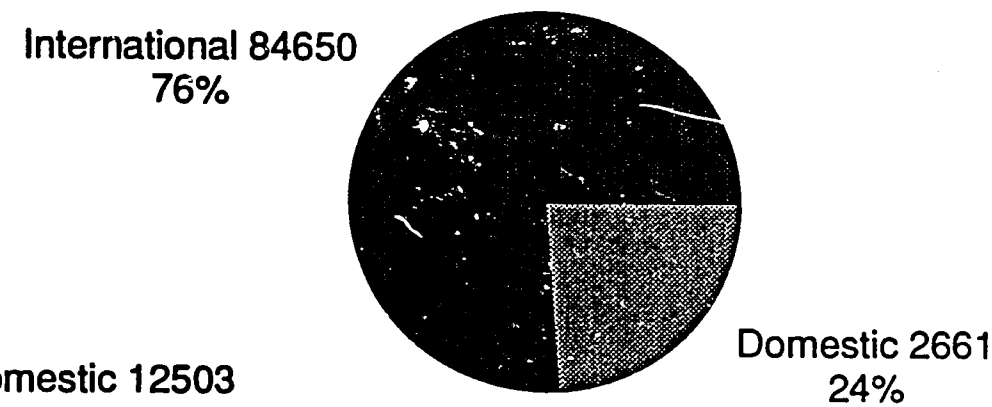

CODETEL (1986)

Source: TCC & CODETEL
(in local currency)

Percentage of PTT's Revenues from U.S. Settlements

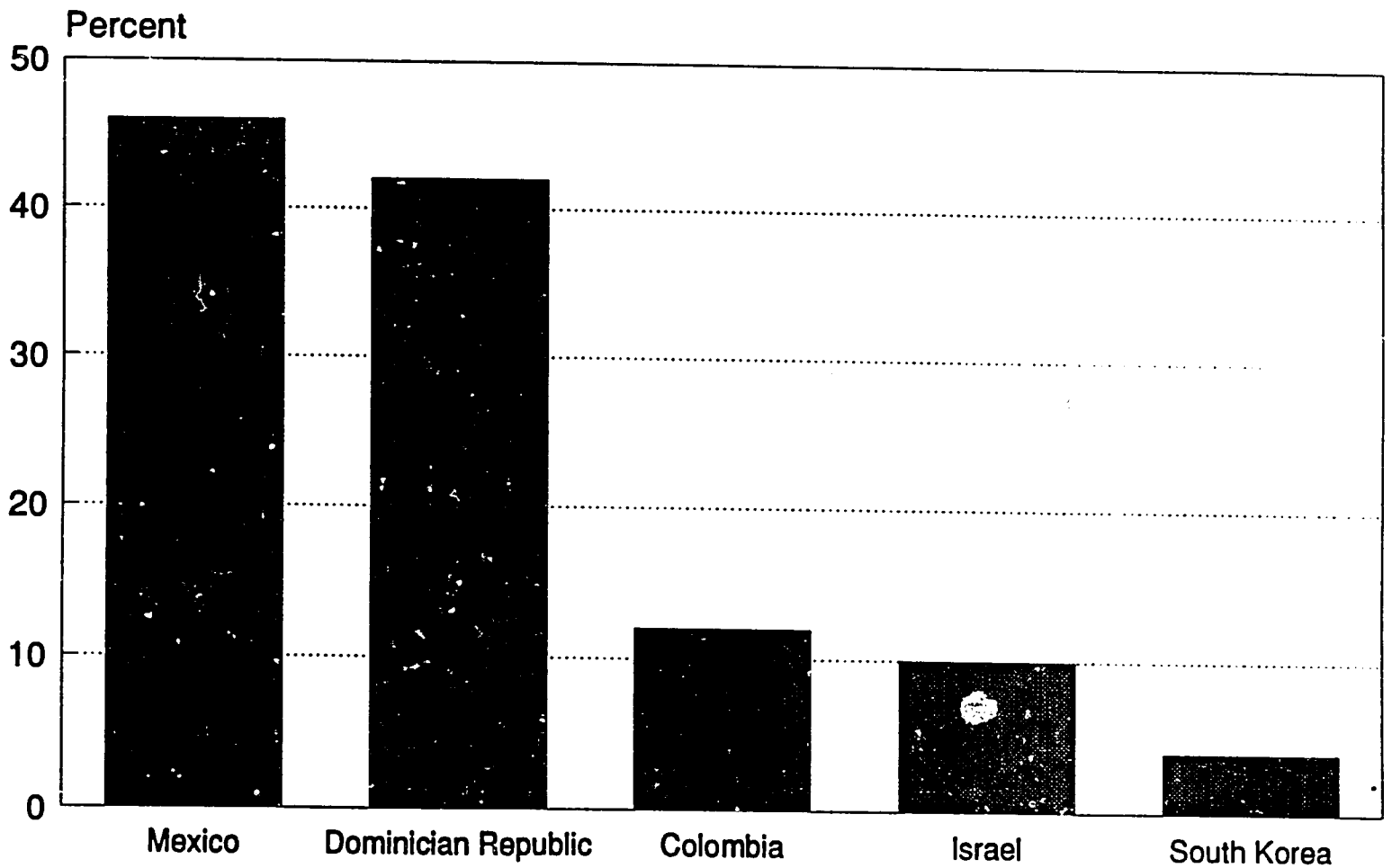

Source: GTE, FCC, & ITU Data

The rates charged for international service have very little to do with the costs of providing the service.

Much of this money that flows to the PTT via the settlements process does not remain with the telephone sector.

Different Rates

It is the asymmetry in the rates between the U.S. and the rest of the world which creates the imbalance, i.e., in most countries an international call is more expensive than in the U.S.

The percentage difference in prices between the U.S. and ROW and the corresponding percentage difference in traffic illustrates this relationship.

The percentage difference in prices between the U.S. and ROW and the corresponding percentage difference in traffic illustrates this relationship.

Percentage Difference in Prices and Minutes, Selected Countries

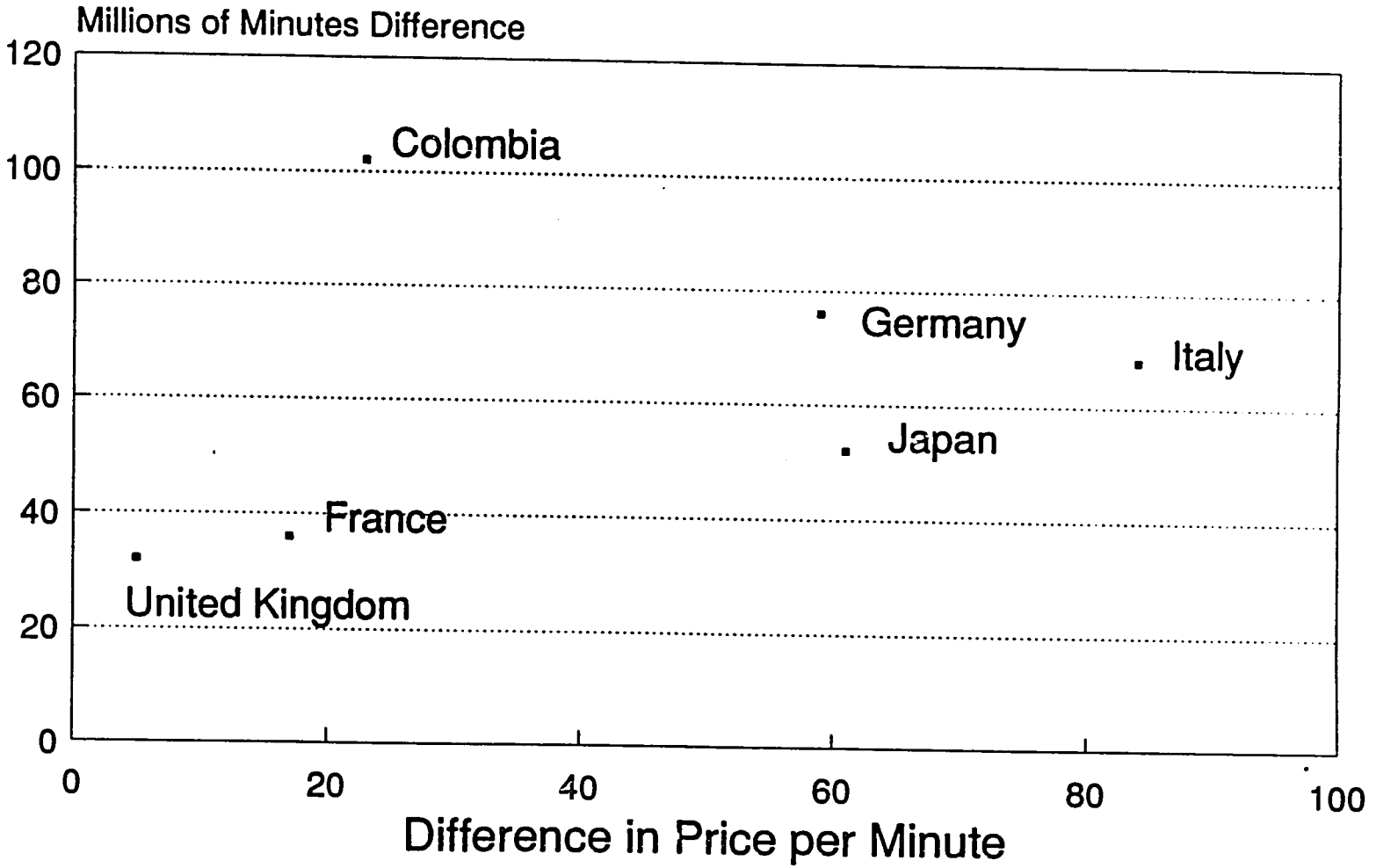

Source: FCC

Percentage Differences in Prices and Minutes, Selected Countries

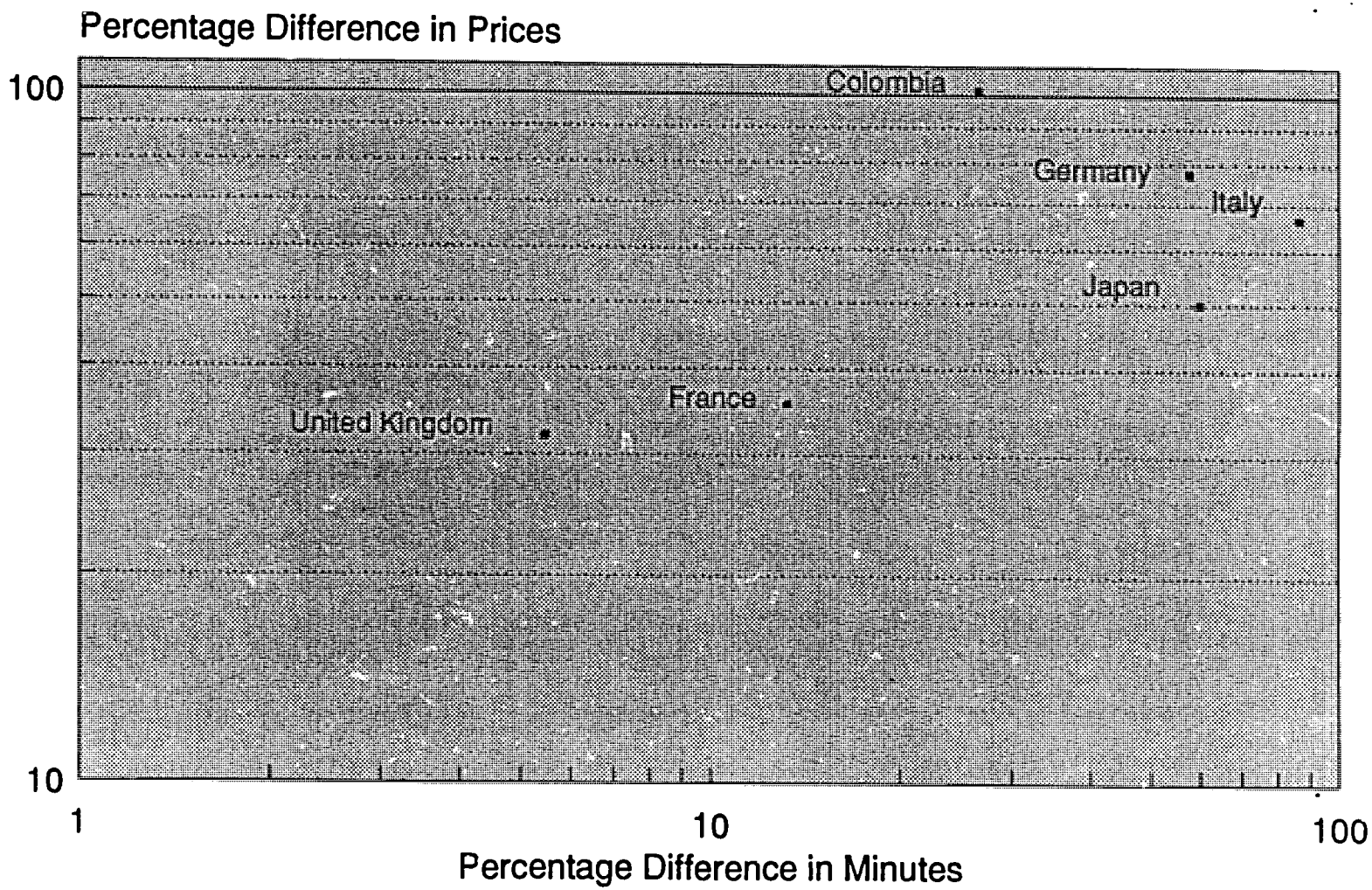

Source: FCC

Summary of Demand Studies

- Overall demand elastic
- Becoming more elastic
- U.S. originating traffic accelerating
- U.S. terminating traffic growing slower

Simulations

The changes shown are in profits for each country's carrier, the consumer surplus (CS), the benefits for each country (the sum of the change in profits and consumer surplus) and the global benefits.

Simulations

The international settlements process can be modeled. For example, the following chart shows a decrease in the price charged by the Rest of the World (ROW) of ten percent.

Scenario 1
Ten Percent Reduction in ROW Price

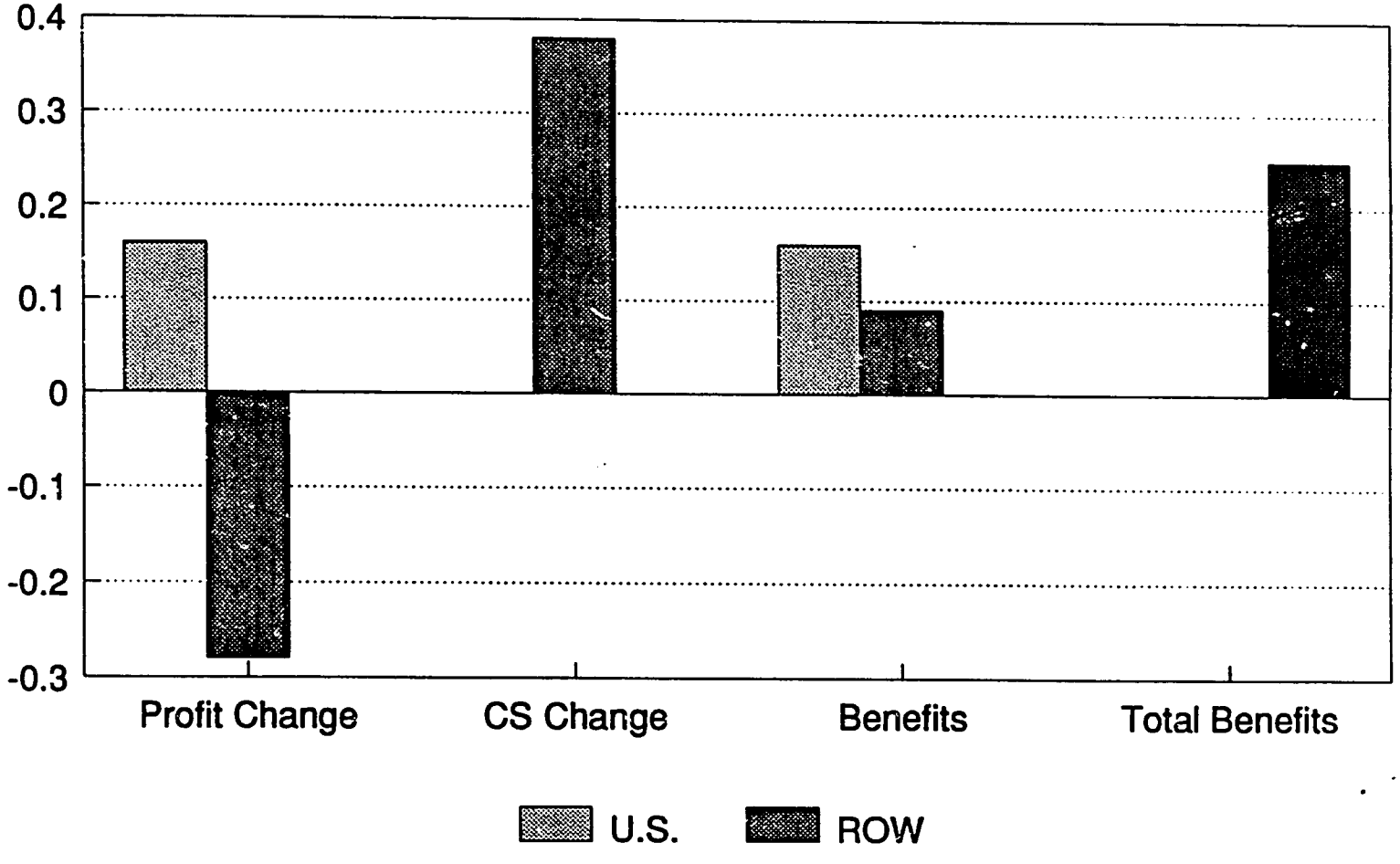

Simulations

The following chart shows another scenario. An increase in the settlements ratio -- the so-called Sixty/Forty Settlement -- would require that the US pay sixty percent of the accounting rate, but only receive forty percent of any surplus.

Scenario 2
Sixty/Forty Settlement

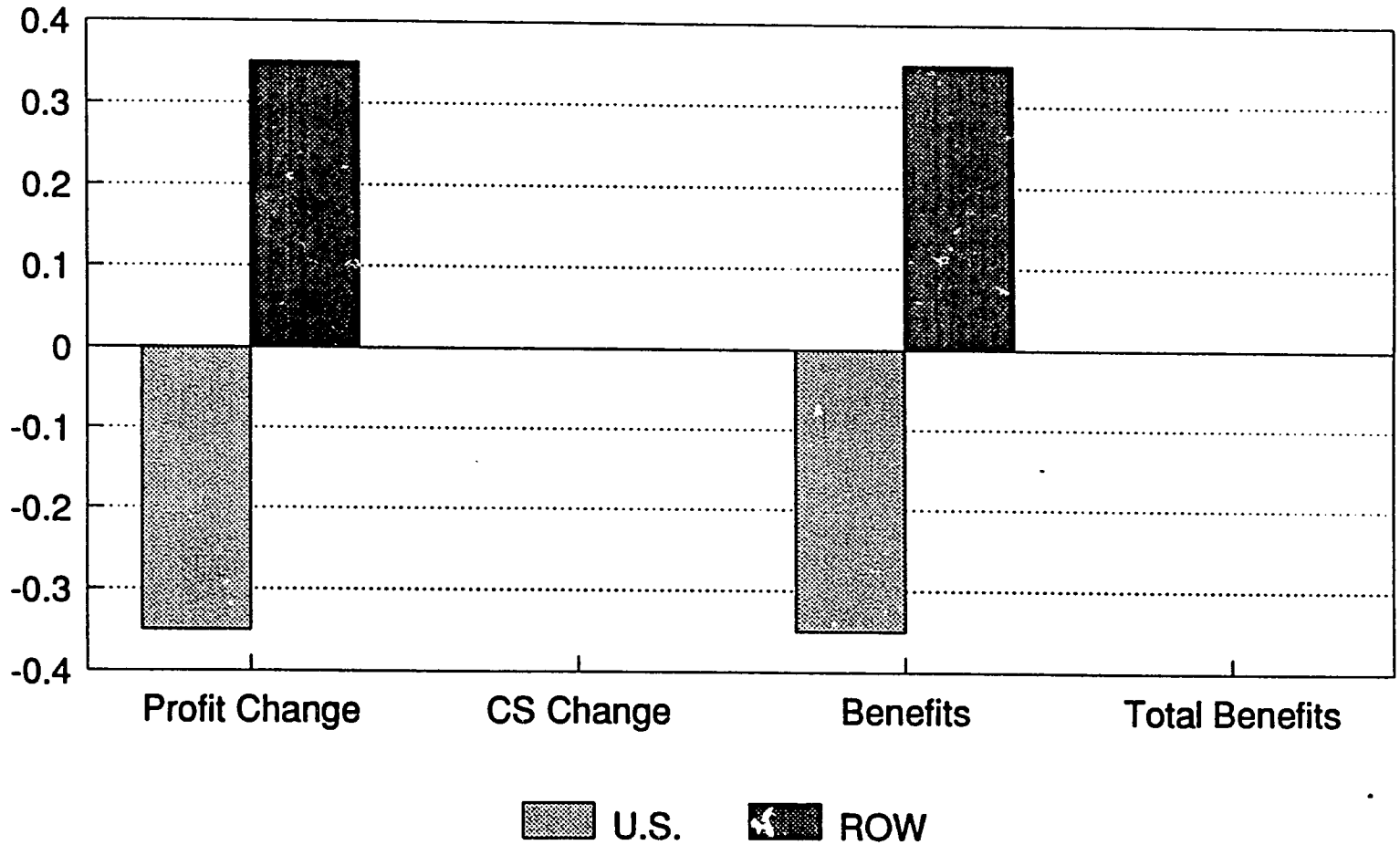

Simulations

The following chart shows a ten percent decrease in the accounting rate.

Simulations

In the last chart and the next chart, the change in profits also represents the change in the deficit. These changes only accrue benefits to the carriers, a pure wealth transfer.

Scenario 3
Ten Percent Reduction in Accounting Rate

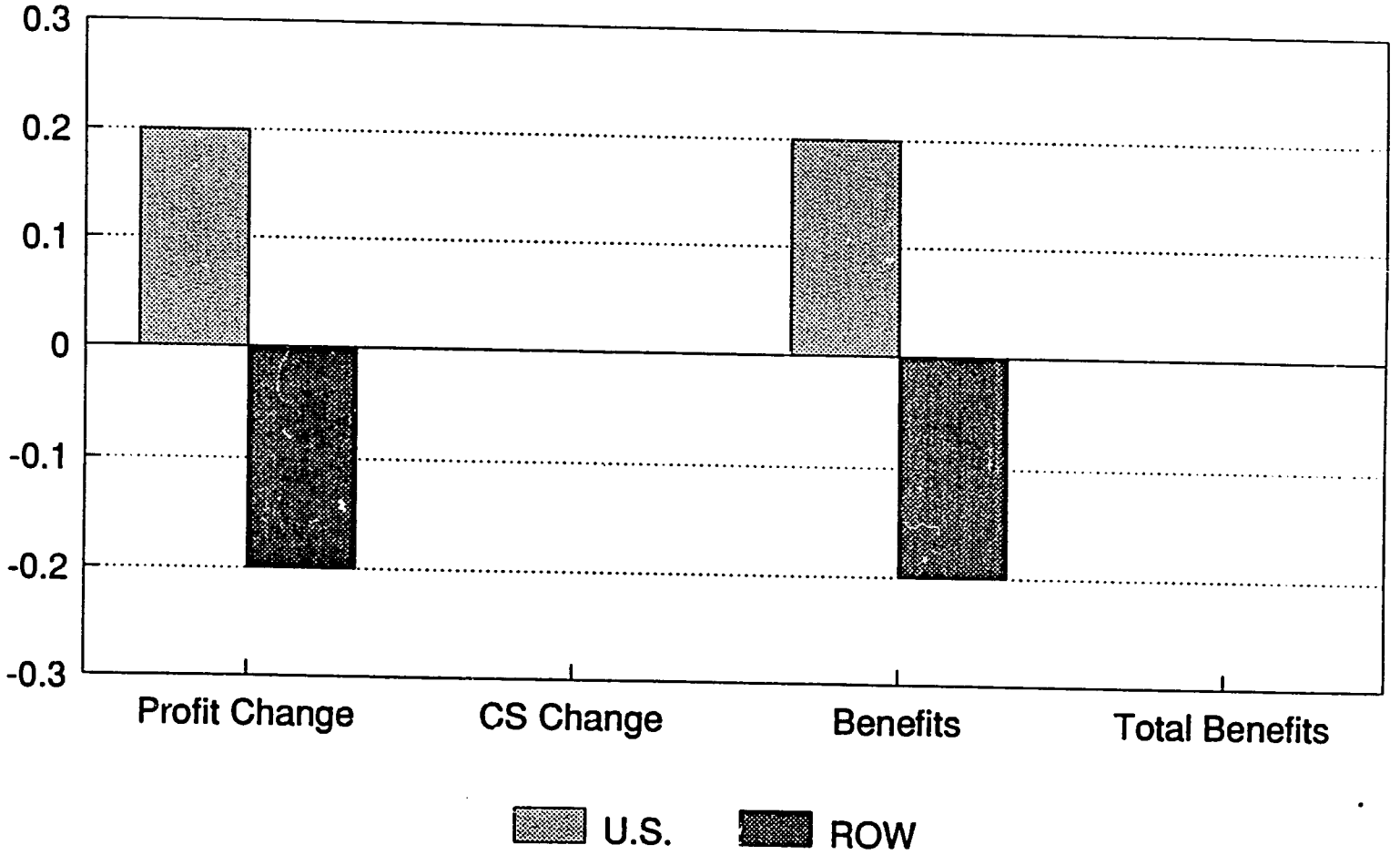

Simulations

The following chart shows a ten percent decrease all prices.

Scenario 4
Ten Percent Reduction in All Prices

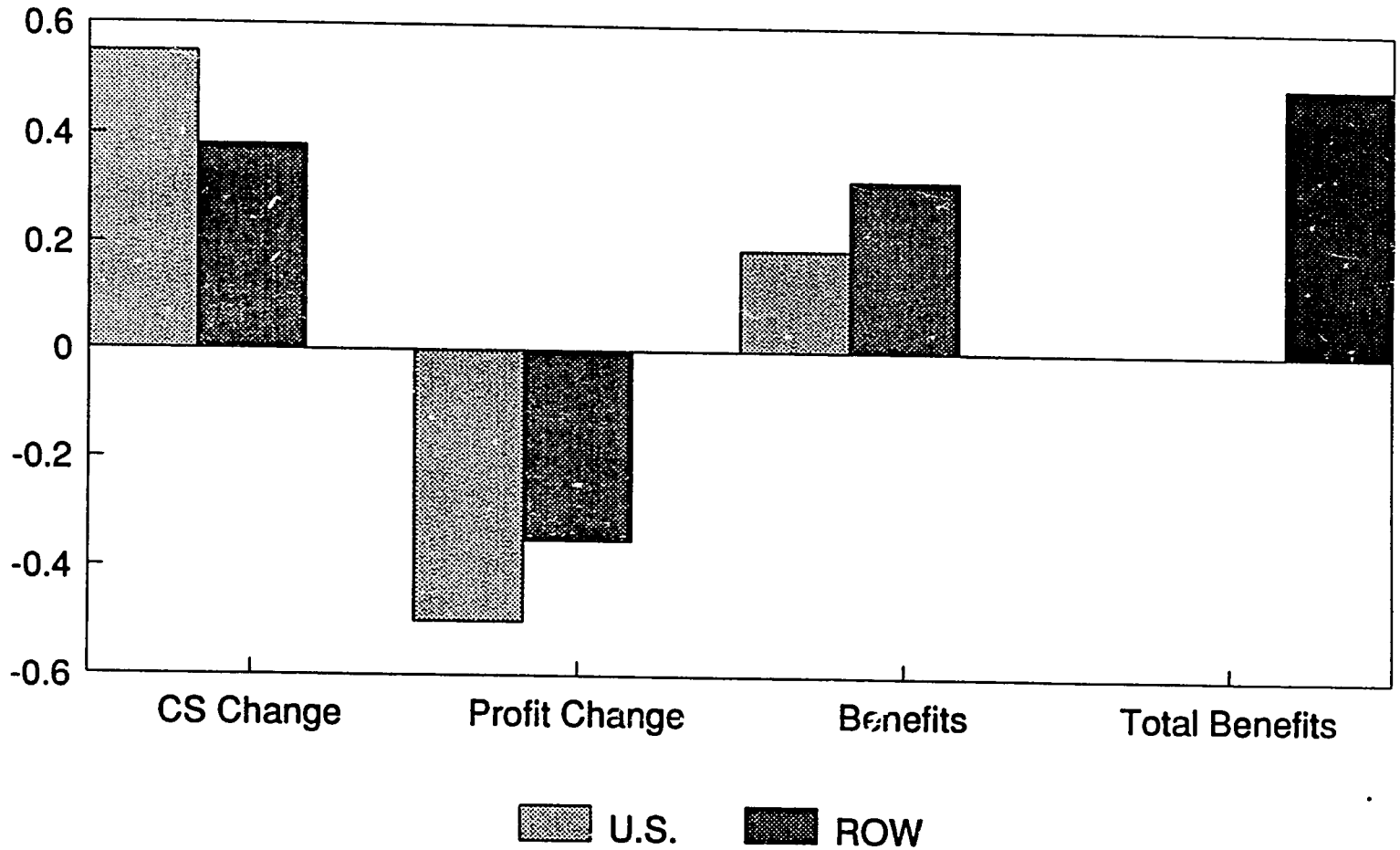

The Economics of Regulation

Rate of Return Regulation

Provision of Essential Services

Alternative Regulatory Methods

Case Studies

Candidates for Competitive Provision

The Economics of Regulation:

Control of a monopoly is essential, particularly if the monopoly controls essential products or services. The next set of slides examines various methods for the regulation. In addition, we will briefly refer to case studies, which are more thoroughly covered in Mr. Bruce's module.

Rate of Return Regulation

Benefits

Disadvantages

- Determining Capital
- Determining the Rate of Return
- Averch-Johnson Effect
  - Over Utilization of Capital
  - Cross Subsidy Effects
- Rate Structure Not Addressed

Rate of Return Regulation:

The most common form of monopoly control (where the monopoly is not government owned and controlled) is rate of return (or rate base) regulation. The regulators concur with the magnitude and type of investments and expenditures of the firm and control the return on investment capital of the firm. This combination of factors determines the total cost of the firm as defined by the regulators and is known as the revenue requirement.

While rate of return regulation has initial appeal, several problems occur in practice:

- Determining the capital stock is not easy.
- Determining the "correct" rate of return is also difficult
- The firm is incented to over-capitalize and cross subside competitive markets. (Know as the Averch-Johnson effect.)
- The rate structure is not always addressed in this process.

Provision of Essential Services

Are the Conditions "Truly" Monopolistic?

Review of the Conditions

Guidance from Sustainability

Provision of Essential Service:

While many industries argue they should be protected because they are "natural" monopolies, extreme caution should be used before granting such protection. If the firm is truly "natural" monopoly, as we saw above, it does not need protection of any kind, unless its price structure is inappropriate. And, as we have also seen, if the price structure is not corre t, inefficiencies result. Thus, the monopoly can improve efficiency if it moves to the appropriate price structure and not need regulatory or legislative protection.

The sustainbility literature indicates that the best method of controlling monopolies is to allow competition to enter the monopolist market. It is the threat of this competitive entry which drives the monopolist to the least cost production and the correct price structure.

Competition as a Regulatory Tool

Franchising

Incentive (Price Cap) Regulation

Alternative Regulatory Methods:

As indicated above, competition is the preferred regulatory instrument. The threat of competition forces desired behavior on the monopoly. The tool of competition may be used in the context of other forms of regulation.

Another method used to control monopoly is to only authorize one provider through the offering of a license or franchise. This is, usually, an attempt to capture the monopoly profits for the franchising body and to impose requirements on the firm which it would not undertake in a free market situation. This method, too has its difficulties.

A relatively new method of regulation is know as incentive or (price cap) regulation. The idea of this method is to allow the firm to have a certain amount of price flexibility within services, but it can not raise the weighted average of its rates by more that the consumers' price index (CPI) less a factor for total factor productivity (TFP) gains. The firm, thus, is incented to do at least as well as the CPI - TFP. If it does better, it is allowed to keep the gain. It can be shown that the TFP can be determined outside the firm and the regulatory context. Thus, the standard is based on exogenous factors. The regulator only acts as a monitor in insure the firm follows the rules. This form of regulation appears to be desirable, however, in its practice, it has not followed this ideal form.

Copyright 1991 James H. Alleman

Case Studies: Application of the Theory

Deregulation of the Long Distance Market

Open Network Architecture (ONA)

Cautions and Failures

Deregulation of the Long Distance Market

The USA Market

The UK Market

The Japanese Market

Long Distance

International

Deregulation of the Long Distance Market:

As Mr. Bruce demonstrates so well, the long distance market in the United States has been successfully deregulated with desirable results. Many competitors have entered (and left) the market and prices have fallen significantly.

In the UK, only two firms were allowed to operate, with less desirable consequences.

The Japanese have now allowed for several carriers in its international market which resulted in a significant drop in the price of the service. The government was not as successful in the domestic market were it tended to constrain competitive. entry.

Open Network Architecture is an attempt to do the same thing at the exchange level.

Cautions and Failures

Duopoly Fallacy:

- Cellular Telephone in the USA
- UK Experience?

Extended Area Service in the USA

Alternatives to the Exchange Network

Cautions and Failures:

However, certain caution and failure to be examined. In my view, the division the cellular market in the U.S. into two carriers (a duopoly) was not and is not successful. Only allowing two carriers in the United Kingdom market has not been as successful as it could have been. Competition means anyone can enter the market. Controlled duopoly is not the same. This is the duopoly fallacy.

Candidates for Competitive Provision

Terminal Equipment

Cellular Mobile

Paging

Exchange Service

Long Distance

LANS/MANS

Enhanced Services

Candidates for Competitive Provision:

This list of markets speaks for itself. The reader can use the tools we have developed in this seminar to judge for himself or herself if these markets can be provided competitively.

MODULE III

Legal Framework and Rules

Previous Page Blank

STRUCTURE OF THE REGULATORY PROCESS AND POLICY OPTIONS FOR GENERATING INVESTMENT CAPITAL IN THE TELECOM SECTOR OF EASTERN EUROPE

Robert R. Bruce
Debevoise & Plimpton

A Background Note prepared
for a Series of Seminars on
Telecommunications Policy and Regulation
sponsored by the U.S. Department of State

September 11, 1991

Previous Page Blank

Issues Raised by the Structure
of the Regulatory Process and Policy
Options for Generating Investment Capital

I. Introduction

This introductory paper is intended to accompany and annotate the outline on Legal Framework and Rules prepared for the Seminar in Telecommunications Policy and Regulation sponsored by the U.S. Department of State (hereinafter "the Outline").

This paper reviews two of the diverse themes covered by the Outline that warrant further discussion and analysis. It focuses, in particular, on policy options facing governments, telecom operators and users, and the public generally, especially in Eastern Europe, concerning (1) the structure of the regulatory process and (2) mechanisms for generating investment capital to rebuild the telecom infrastructure of Eastern Europe. The paper explores, in particular, the nexus between regulatory policy and procedure, on the one hand, and the generation of new sources of investment capital.

Some of the issues raised below are discussed in further detail in various discussion papers that are appended to the Outline.

II. Issues Concerning the Regulatory Process

A. Scope and Structure of the Regulatory Process

The initial section of the Outline focuses on the structure of the regulatory process in the United States and in other industrialized countries.

Policymakers in countries introducing market reforms should recognize that structuring a regulatory process involves more than merely creating a regulatory body. It requires establishing a mechanism through which other affected governmental entities -- departments, ministries, and national legislative bodies -- can have a voice in formulating national telecom policy.

It is increasingly important, especially in countries developing their telecom infrastructure, to ensure that telecom policy becomes a vehicle for facilitating national economic growth and development. Broader participation in the formulation of telecom policy will often minimize the tendency of telecom officials or regulators to focus on protecting the interest of the established provider of telecom services. Rather, such broader participation will ensure that telecom policy is more geared toward the needs of users of telecom services -- especially in emerging industry sectors dependent on such services -- so that users will have access to

facilities and services necessary to compete in a global economy.

Government ministries with responsibility in the areas of finance, competition, trade, national security or foreign policy may all make important contributions to the telecom policymaking process. For example, competition and trade officials often play a vital role in promoting open markets and a competitive environment that attract new foreign investment and make existing service providers more efficient.

The relationship of the regulatory body with legislative bodies -- and even with the executive branch of the state -- must be carefully defined. Overall, the objective of policymakers should be to create a regulatory process that strikes a balance between two sometimes conflicting objectives. The regulatory process must be responsive to changing policies and political pressures, but it must also afford regulators the independence and autonomy to make hard -- and politically unpopular -- judgments, especially concerning price reform.

In the United States, there are various ways through which legislative bodies can influence the regulatory process. Hearings to confirm regulatory appointees and oversight hearings are two of the more

prominent means by which legislators can register their views and those of their constituents. Yet, the day-to-day responsibility for making policy rests in the hands of regulatory officials.

Similarly, although the executive branch in the United States (and, for example, in Canada, the U.K. and Australia) influences the regulatory process, the main regulatory body also enjoys a degree of autonomy and independence from the executive branch of government. The President appoints FCC commissioners (who cannot all be of the same political party) for a fixed term of years, and such appointments must be confirmed by the Senate. The President cannot remove such appointees except for real abuse of public trust and personal wrongdoing; mere policy differences are not a sufficient basis for removal from office.

The consequence of all these factors is that telecom policy in the United States is responsive to overall changes in policy or political direction. In general, however, it is substantially kept above the day-to-day tugging and hauling of partisan politics.

The independence and autonomy of the regulatory process may well be essential to the process of introducing market reforms.

In Eastern Europe, such market reforms may require politically unpopular price increases that are seemingly at odds with political reforms aimed at making government more responsive to the public. However, if government policymakers or officials of telecom organizations are seen as unresponsive to elected officials, they may be viewed as suspect carry-overs from the old authoritarian and undemocratic regime.

The dilemna facing telecom operators in Eastern Europe is clear. They need to regain the confidence of the public that they can effectively meet and serve the needs of consumers. However, if telecom operators are not insulated to some significant degree from political pressures, they may be unable to make hard judgments to raise prices or allocate investments in order to create an environment for stable long-term growth.

Though there are inevitably many different ways to approach the structuring of regulatory bodies either as independent entities or as part of the ministry of communications, there may be real advantages in countries with a strong tradition of central planning to creating separate independent regulatory bodies. Real independence of a regulatory body from a ministry of communications may accelerate the process of

differentiating the role of regulating a market from that of overseeing the operations of an important publicly owned firm. Breaking the mold of past interventionist policies that centralized key investment and business decisions in political hands should be one of the critical objectives of any effort to restructure national telecom policies in Eastern Europe.

There are often inherent conflicts in the role of a Minister as "chairman of the board" of an important state enterprise and his role as chief regulator of an important industry sector. These conflicts can be removed or minimized through a variety of measures. Privatization of a state-owned telecom entity is one sure route, of course. Creating separate specialized bodies in a ministry -- to regulate and manage a state-owned telecom entity -- and delegating ministerial authority to such bodies are other avenues. Alternatively, a minister of communications could assign the responsibility of overseeing the operation of state-owned assets to a state holding company or to another ministerial body. Vesting authority in a truly independent regulator is another option.

Thus, policy questions concerning the structure of the regulatory process are extraordinarily important

and sensitive. While the EC Green Paper's insistence on separating regulatory and operational responsibilities is accepted as conventional wisdom, it does not address such critical questions as (1) whether the regulatory process should be independent or not, (2) whether the regulatory entity should consist of a single member or collegial body, (3) the extent to which regulators should be insulated if they remain within the telecom ministry, (4) how regulators should interact with other executive bodies and policymakers, or (5) how regulators should interact with legislative bodies.

The answers to these difficult issues will obviously vary from country to country. Differing administrative traditions and political realities will shape the type of regulatory process that actually emerges. Though there is clearly no single right outcome or optimal structure, it must be stressed that the structure of the regulatory process will substantially affect the outcome of the policymaking process.

B. The Essential Role of Transparency in the Regulatory Process

An essential element of the American regulatory process is its openness and transparency. Transparency is ultimately a guarantee against arbitrary and unprincipled decisionmaking.

In practical terms, a transparent regulatory process is one that affords an opportunity to interested parties and the public at large to offer views and opinions concerning the wisdom and lawfulness of various proposed regulations. In the United States, such views are offered either in written comments or through informal face-to-face presentations. An opportunity to comment, of course, requires regulators to announce in advance their proposed policies or regulations.

Another aspect of an open or transparent regulatory scheme is that regulatory bodies are required to prepare written explanations of the factual and legal bases for their decisions or policy determinations. Dissatisfied parties can seek reversal or modification of a regulatory determination. Depending on the decision being challenged, they can seek redress either through the responsible regulatory officials or through some other "process of appeal" to a court or cabinet committee.

Such openness and procedural safeguards in a regulatory process afford important barriers against arbitrary or unprincipled decisionmaking. Equally important, consultation with affected interests can ensure that the practical insights and concerns of

entrepreneurs and consumers will be taken into account in the decisionmaking process.

An open regulatory process will also facilitate national regulators in taking into account emerging policies and regulations in other countries. For example, many new regulatory entities are springing up at the national level within the European Community. Coordinating the decisions of twelve independent and autonomous regulatory bodies could be a formidable task. Indeed, it may be impractical to have to rely alone on the EC's oversight powers to ensure consistent policy initiatives on a Europe-wide basis. Thus, it may be valuable to encourage an active dialogue and exchange of information among regulators within Europe -- and indeed in a wider circle of countries as well.

When advice and comment is sought from interested parties at the national level, emerging regulatory bodies throughout Europe might find it worthwhile to seek the comments and views of their regulatory counterparts in Europe and beyond. Regulators should seek, moreover, to exchange on a systematic basis their respective national regulatory decisions and policy determinations. In this way, the process of establishing

a dynamically evolving but consistent set of regulatory initiatives might be accelerated.

C. Need for Incremental Decisionmaking

Another important element of the American regulatory process is its incremental approach to articulating regulatory policy.

American regulatory policy has evolved over the years from a rather broad and general legislative mandate contained in the Communications Act of 1934. The Act delegated to the FCC the responsibility to develop policies and regulations in response to changing technological and economic developments. Thus, even without substantial legislative amendments, the Communications Act, which was drafted at a time the telecom sector was virtually dominated by a single carrier, still has served as a basis for framing guidelines for the highly competitive industry structure that exists today in the United States.

American telecom regulation has thus been based on a very pragmatic, ad hoc, and procedurally oriented approach. In contrast, countries with civil law traditions have often focused greater attention on formulating detailed rules and regulations that address

comprehensively existing and potential industry structure and competitive scenarios.

It is easy, however, to exaggerate the differences between the regulatory approaches of civil law countries and those following the Anglo-Saxon proceduralist tradition. There is no a priori reason, for example, why countries with a civil law tradition cannot, and should not, focus attention on developing a regulatory framework based on general principles and procedures for applying these principles in specific cases.

Incremental or ad hoc approaches to devising regulatory norms may end up being a pragmatic way to develop legal frameworks for industry sectors where technological and economic forces are restructuring markets and the potential for competition.

D. Need for Dispute Resolution Capabilities

Far more important than creating new regulatory bodies may well be the process of establishing the capability to resolve on an ad hoc basis the difficult disputes that arise in the transition to a market-driven structure for the telecom industry.

For example, regulators must be able to create mechanisms by which established telecom carriers provide essential facilities and services -- especially local

exchange services -- to new competitors, value added service providers, and to users. Interconnection issues should be resolved, as a general matter, through good-faith negotiations among the affected parties, and regulators should establish a framework of principles applicable to such negotiations. For the disputes that are certain to arise from such negotiations, an effective mechanism for resolving such disagreements must be instituted.

For example, one option for resolving controversies over interconnection is through arbitration. Each party could designate its own representatives who in turn could select a disinterested third arbiter. Alternatively, the regulatory body could select such a disinterested third party.

Reliance on flexible and innovative dispute resolution procedures could minimize the need for creating an unwieldy new regulatory agency. In fact, utilization of such procedures could permit establishment of regulatory bodies headed by a single member who can be vested with the responsibility to appoint arbitration or advisory panels to assure a diversity of perspectives.

E. Issued Faced by New Regulatory Bodies

Any new regulatory body will require experts with legal, technical, and especially economic backgrounds. If regulators are to adopt policies that are intended to remedy imperfections in the performance of markets, they must be able to analyze and understand the complex dynamics of competitive markets. Moreover, the most difficult transitional issues with which regulators must wrestle are likely to concern the restructuring of tariffs that may not have historically provided adequate revenues to cover the costs of local exchange service. Quite typically, revenues required for investment in infrastructure have been generated by international and interexchange tariffs that are fixed at levels well in excess of the cost of such services.

These tariffs must be restructured because they provide an incentive for "uneconomic entry" by providers of interexchange and international services. Moreover, pressures for reductions in international rates are growing. Telecom providers will find themselves unable to generate adequate investment capital for new local infrastructure through existing price structures.

Regulators will be tempted to hope that any potentially adverse effects of competition in the national

market can be avoided by maintaining the traditional monopoly role of telecom operator as a provider of facilities and switched voice services. However, pressures will grow from large users to obtain access to efficiently priced communications services that are essential to assure the competitiveness of such users in international markets.

In addition, the emergence of full scale competition in some major industrialized countries will drive down the cost of international circuits. The downward pressures on prices in countries where competition has not been restricted will inevitably exercise a gravitational pull on the pricing of international services in neighboring countries where restrictions on competition remain in place.

Major changes in tariff structure will spawn major disputes among carriers and their customers -- and ultimately regulators will be called upon to become involved. With the introduction of unrestricted competition, disputes will also arise over the extent to which new entrants should support the provision of universal service through access charge mechanisms.

In most countries where telecom carriers have been government owned, there is no experience or expertise

concerning how to go about rate regulation. Typically, carriers have maintained cost accounting systems on a functional basis and are unable to assess the profitability of different lines of their business. Neither carriers or regulators have made serious efforts to develop cost accounting systems or cost allocation principles -- either for business-related or regulatory purposes.

Emerging new regulators may be very wary about taking on the burdens of traditional rate regulation. As was the case in the United States, they might well conclude that allowing competitive entry in key sectors of the telecom industry is a useful and effective way to develop benchmarks for the performance of an establish telecom service provider.

It has certainly been the hope of officials heading new regulatory bodies in Europe that the burdens and complexity of the American regulatory process can be avoided. However, the experience of the U.K. and Australia in introducing competition on a large scale demonstrates that there are no short-cuts around some of the very difficult issues with which American regulators have had to wrestle over the past two decades.

III. Options for Generating Investment Capital for New Telecom Infrastructure

The Outline offers an overview of options for generating investment captial for new telecom infrastructure; it also examines some potentially novel ways of attracting private investment in the telecom sector.

A. An Overview of the Policy Options

The challenges faced by telecom operators center around generating new investment capital by removing legal or regulatory burdens as well as by pursuing some new policy initiatives.

One set of measures involves removing burdens of the past. These measures include:

- Removing obligations to subsidize postal activities;
- Eliminating the ability of the Finance Ministry to make ad hoc assessments with respect to telecom profits in order to offset temporary budgetary needs in other sectors, thereby rendering long-range planning impossible;
- Modifying the traditional view that the telecom sector should be a cash cow, generating resources necessary to support other societal needs, and adopting the view that higher levels of investment in telecom

infrastructure are essential to stimulate national economic growth;

- Allowing the telecom provider direct access to domestic and international capital markets;
- Removing any burden that the telecom provider become a vehicle of industrial policy by obtaining essential equipment only from domestic manufacturers;
- Lifting tight controls on telecom pricing that maintain local tariffs at artificially low levels and prevent telecom operators from generating through internally generated cash flow resources necessary for new infrastructure;
- Adopting policies calculated to assure adequate depreciation of existing equipment and to provide incentives for cost reductions through a price cap mechanism that prevents prices from falling behind inflation rates; and
- Separating the role of overseeing the state's investment stake in a telecom provider from its role as a regulator through a variety of measures including transferring control over the telecom operator to a special holding company and creating a truly independent regulatory process.

Policymakers can also consider additional options for encouraging more efficient operations and increased levels of investment. For example, they can:

- Encourage the decentralization of telecom operators and the development of profit centers on a line of business basis;
- Provide incentives for managers on a line of business basis to reduce costs and increase revenues
- Develop internal transfer prices within a telecom operator and provide incentives for managers to contract out for services and facilities whenever costs can be reduced;
- Encourage joint ventures with outside suppliers, especially for the provision of various ancillary services including cellular, paging, and value added offerings; and
- Create opportunities for new private investors to participate in the ownership and operation of the telecom operator and bring new management skills and disciplines into a public company.

B. Beyond the Green Paper: Creating New Opportunities for Private Investors

Policymakers may also have to recognize that there are severe limitations on the capabilities of

existing state enterprises to mobilize investment resources and oversee the installation of major new infrastructure. Most private investors will be entirely unwilling to put new money into essentially unreformed telecom ministries. For this reason, it may be necessary to pursue market-driven policies to attract new foreign exchange and investment capital resources, especially from telecom users.

In most cases, telecom organizations in Eastern Europe have been subject to tighter and more centralized controls than traditional PTTs in Western Europe. They may be in fact less capable than their Western European counterparts of being easily converted into effective vehicles for constructing new infrastructure. Many face a grave crisis of public trust because of their entanglements with the old regime and their difficulties in delivering services to meet consumer needs.

In fact, the slow implementation of new regulatory mechanisms in many Eastern European countries may create a policy vacuum that enterprising investors seek to exploit. Other state-owned public utilities -- railway companies or power utilities -- are being encouraged by outside investors to become investors in the telecom sector. Moreover, cellular systems being

installed to meet pressing requirements for telephone service may emerge as effective rivals of traditonal telephone companies.

Thus, it may not be realistic or desirable for telecom policymakers in Eastern Europe to adopt a restrictive policy toward facilities-based competition. Responding to pressing public needs may necessitate a more "disorderly" approach to encouraging new entry and new investment than is anticipated by the EC Green Paper which focuses primary attention on liberalizing the provision of services rather than on promoting facilities-based competition. Moreover, a very rivalrous and competitive environment may accelerate the pace of institutional reform within telecom organizations in Eastern Europe.

C. Need for Unconventional Approaches to Constructing New Infrastructure

The emerging market structures in Eastern Europe may also be very much influenced by opportunities created by new technologies and by enormous public pressures rapidly to meet consumers' needs for telephone service.

When infrastructure must be rapidly expanded in a very short period of time by institutions weakened by a tradition of central planning, it may not be desirable to think about building new telephone plant the way it has been constructed in the past. In fact, new technological

developments -- as well illustrated by other presentations at the regulatory seminar -- make it possible to envision constructing lines to customers not from the central office outward but from the customer premise inward. For example, various radio-based distribution services make it feasible to develop local switching nodes to collect traffic on a decentralized basis and deliver it to central office switching facilities.

The dire state of the existing infrastructure may dictate a decentralized approach to rebuilding the telephone network. There may be many advantages to strategies that multiply the number of potential providers of service and increase incentives for entrepreneurs to install new services.

One keen Hungarian telecom expert recently noted the parallels between efforts to reconstruct the center of Budapest at the end of the Second World War and the challenges facing those who would rapidly expand telephone service in that country. He pointed out that Hungarians took on responsibility for clearing rubble from the roads in front of their houses and that only with this surge of small-scale and individual enterprise could the larger-scale and collective efforts of Hungarians become

effective. Similarly, a well-focused initiative to put many individual entrepreneurs to work might be a promising way to rebuild the telephone networks of Eastern Europe.

D. Option for Encouraging "Franchising" Arrangements by Telecom Operators:

Telephone companies could establish a "franchising" program to encourage small firms to construct new local telephone plant. These entrepreneurs would not operate as independently licensed local companies. Instead, they would operate utilizing the existing license of the telephone company. Indeed, the agreement between the telecom operator and its "franchisees" might provide that the telecom operator would have an option to acquire its franchisees in the event that plans for privatization proceed.

Allowing the telephone company an option to acquire its "franchisees" in the future minimizes the risk that the telecom operator would be "balkanized" and reduced to a group of uncooperative contentious small-scale companies. The telecom operator -- or an outside firm brought in to establish such a franchising company -- would have responsibility for setting standards and assuring the smooth provision of service on an integrated basis. It would also retain control over the billing mechanisms within the franchising scheme.

In establishing such a scheme, policymakers would have the option of permitting new tariffing schemes over facilities installed by franchisees. For example, calls could be billed on an individual basis utilizing calling and called party number identification rather than on the basis of pulses. In this way, it might be possible with new rate structures to better recover the cost of local networks and to stimulate higher interexchange and international calling volumes.

Establishing a demarcation between a telecom operator's existing "retail" services that are provided directly to customers and those that are offered on a "wholesale basis" through intermediaries could provide important incentives for the construction of new networks. Centralized state-run companies have not offered incentive-based compensation, nor have they developed the marketing and business skills that will be needed in the future. A web of small-scale, entrepreneurially oriented firms might be better than any business school course in training the new cadres of managers needed for the future.

The creation of a franchising scheme could create attract opportunities for new investors -- either in establishing the franchising scheme or in running franchisees. These new investments would be smaller scale

and less risky than a direct investment in a former state-run company. They would not, however, be an alternative to eventual full-scale privatization of a telecom operator.

Instead, such an initiative could be seen as laying the groundwork for privatization. It would generate a group of indigenous entrepreneurs who, in exchanging the stock of franchisees for stock in the telecom operator, could become a significant part of the governance structure of a restructured telecom operator. This plan could be an avenue for rewarding a telecom operator's employees not for their past years of service with the company but for their future contributions to its growth.

More importantly, by stimulating the growth of new connections and revenues, the implementation of a franchising scheme would improve the prospects of the telecom operator to attract investment. Investors will ultimately prefer to base their decisions on trends concerning emerging new income streams than on evaluations of the "black box" that telecom operators' current accounts now generally represent.

E. Other Approaches to Privatization: Privatization of Assets

Another technique for encouraging new private investment may be to identify more limited options for encouraging private investment than selling shares in the telecom operator.

Telecom operators in Eastern Europe have, of course, been actively involved in attracting new investors in joint ventures for the provision of cellular services or other activities ancillary to their core telephone business. It might be useful, however, to create investment opportunities in the development of major urban switching centers or in an overlay network for business users.

Such opportunities could be created through the utilization of a separate entity to own infrastructure facilities -- transmission lines and switching plant -- and lease them to the telecom operator. The lease arrangement might provide investors with a "kicker" that would relate lease payments to the operating results of the business unit in which leased assets were utilized. The result would be what might be described as a type of "bottom up" privatization.

Investors would require many assurances and guarantees. They might be more interested, for example,

in an investment in new facilities utilized in an overlay network where prices for business users -- both local and international -- were set at "international levels". Investors would also need to know in very clear terms the regulatory and legal framework applicable to such facilities leasing arrangements. Indeed, the negotiation of these understandings might well accelerate the process of overall sectoral reform.

Efforts to create new investment opportunities in the telecom operator through "privatizing its assets" would offer an opportunity for investors and the telecom operator to gain experience in accessing capital markets. Privatization would thus occur in stages. Investors in "packages of assets" might have, for example, the option to exchange their interest in such limited investment vehicles for shares in the telecom operator once it is privatized.

An initiative to privatize assets might also operate quite successfully in tandem with a franchising initiative. For example, in order to accommodate new traffic loads generated by franchisees, the telecom operator might have to construct, for example, a "ring network" to collect traffic generated by franchisees.

Such a network might be separately capitalized by private investors or by such investors and a group of franchisees.

Many of the details of such a scheme for attracting new investment need to be refined. However, they offer some new and promising avenues for new investment and warrant careful assessment in the context of the experience of different countries in Eastern Europe.

IV. Conclusion

As the foregoing discussion hopefully makes clear, regulation should not be seen as an end in itself or simply as a pared down approach to central planning. Rather, it should serve to redress imperfections in the functioning of marketplace forces. Where prices can be set or investment decisions made autonomously by firms without demonstrable adverse consequences for the public, regulators should not interfere.

One of the other important objectives of regulators should be to restructure pricing. Prices must correspond to the costs of providing services and should generally reflect price levels and structures prevailing in market economies. Only then will steady and reliable sources of investment capital be available to telecom operators.

Regulation can facilitate the emergence of competition necessary to meet the needs of users and to ensure efficiency on the part of existing telecom operators. The conditions for competition must be fair both for new entrants and for the established service provider. Without such safeguards and regulatory oversight, new investment cannot be attracted.

Regulation should not only make it easy for new entrants to provide services and for users to invest in their own networks. It should also encourage existing operators to adopt innovative approaches to attracting new investment capital. It should not necessarily require, for example, that franchisees building out local networks be licensed and regulated as local telephone companies. It should not regulate as a telephone company entities that lease facilities to telecom operators.

In sum, one of the critical objectives of a regulatory scheme is to create a stable climate that will attract new and innovative investment in telecom infrastructure.

OVERVIEW OF PRESENTATION

I. REGULATORY PROCESS

- U.S. Experience and Examples From Other Countries
- Key Regulatory Issues

II. INSTITUTIONAL REFORM AND SECTORAL RESTRUCTURING

- Experience of U.S. and Other Countries
- Linkages Between Institutional Structure and Financing Infrastructure
- New Financing Techniques

Previous Page Blank

TELECOM POLICYMAKING PROCESS

DIFFERENT ENTITIES WITH INTEREST IN TELECOM POLICY

- Ministry of Communications
- Regulatory Body
- Ministry of Finance
- Ministry of Economic Affairs
- Ministry of International Trade
- Entities Concerned with Competition Policy
- Ministry of Foreign Affairs

DIFFERENT STRUCTURES FOR REGULATORY BODIES

INDEPENDENT ENTITIES	ENTITIES PART OF MINISTRY
Oftel (U.K.)	Federal Republic of Germany
Ausstel (Australia)	France
FCC (U.S.)	Japan
CRTC (Canada)	Netherlands
	Finland
	Italy*

* Italy has yet to establish a separate regulatory body

OVERVIEW OF REGULATORY PROCESS: SOME KEY OBJECTIVES

- Transparency and Openness
- Predictability for Telecom Providers and/or Investors
- Policy Outcomes That Are Not Arbitrary or Capricious
- Supplementing Role of Market Forces -- Regulations That Are Minimum Necessary to Emulate Results of Free Market
- Pragmatic Responses to Needs of Telecom Operators and/or Other Sector Participants
- Responsiveness to International Developments and Economic Conditions

ALTERNATIVE APPROACHES TO THE REGULATORY PROCESS

Creating New Institutional Mechanisms
versus
New Dispute Resolution Procedures

Regulatory Body

Ad Hoc Arbitration Procedures

(Involving telecom operator, users, competitors)

STRUCTURE OF REGULATORY FRAMEWORK

NEED FOR FLEXIBILITY AND PREDICTABILITY

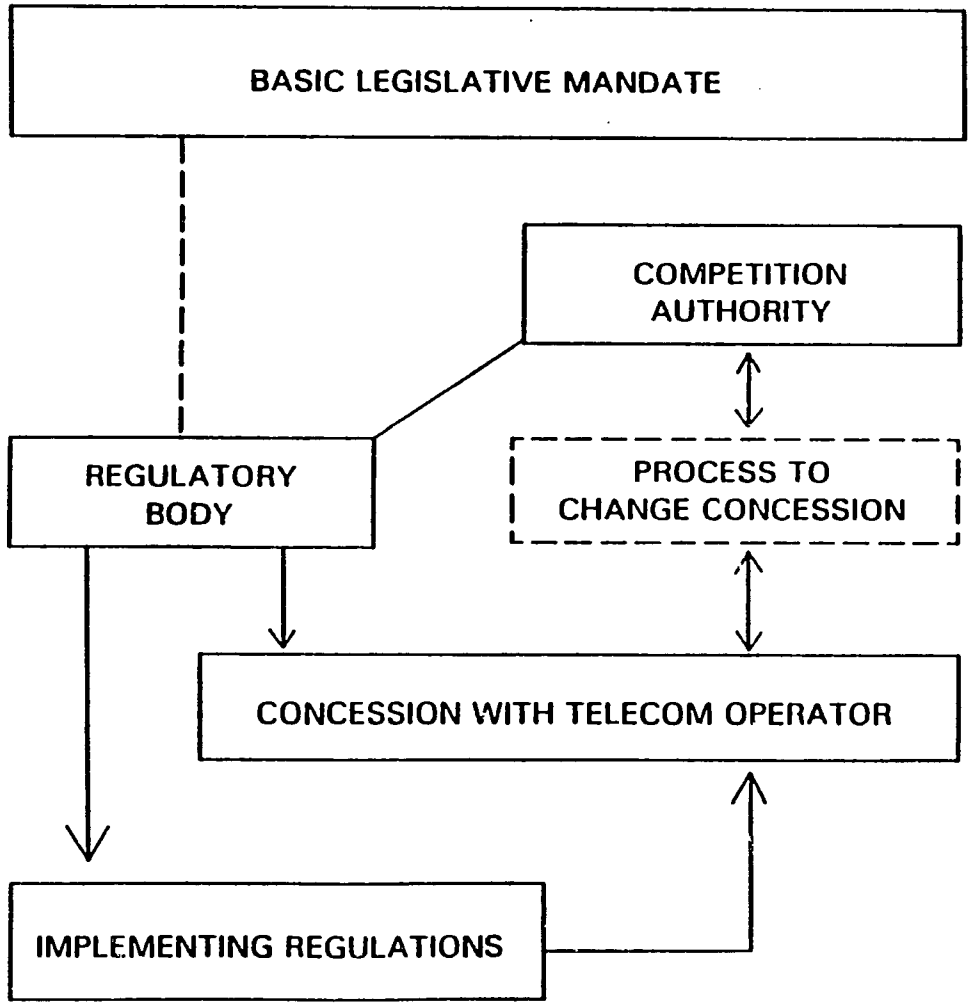

SCOPE OF TELECOM REGULATORY ISSUES

Issues Relating to Data Protection, Data Security, Ownership and Control of Software	• Data Security Issues (Versus State, Network Security, User Security) • Data Protection (Restrictions on Collection and Use of Telephone Company Data Bases -- Especially Commercial Data From ISDN Network Activities) • Competition Issues Related to Access to Telco-Produced Data • Intellectual Property Issues
International Trade/Telecom Issues	• GATT • Bilateral Agreements • Regional Agreements (Treaty of Rome, ETA, NAFTA)
Traditional Telecom Regulatory Issues	• Entry Regulation • Pricing Issues • Interconnection • Spectrum Allocation and Assignment • Ownership Requirements on Private and/or Foreign Investors

PRICING ISSUES
FACED BY EMERGING REGULATORY BODIES

- Rate Rebalancing Process (With Other Entities Such as Finance Ministries)
- Price Cap -- or Ongoing Rate-Regulation (Tied to Concession for Telecom Operator)
- Interconnection Pricing Including "Contribution" for Universal Service Obligations
- Pricing Regulation (if any) of New Entrants
- Competitive Responses by Established Entrants: Standard for Predatory Pricing
- "Asymmetry" Between Established Entrants and New Entrants
- "The Level Playing Field": Differing Perspectives of New and Established Entrants

INTERCONNECTION ISSUES

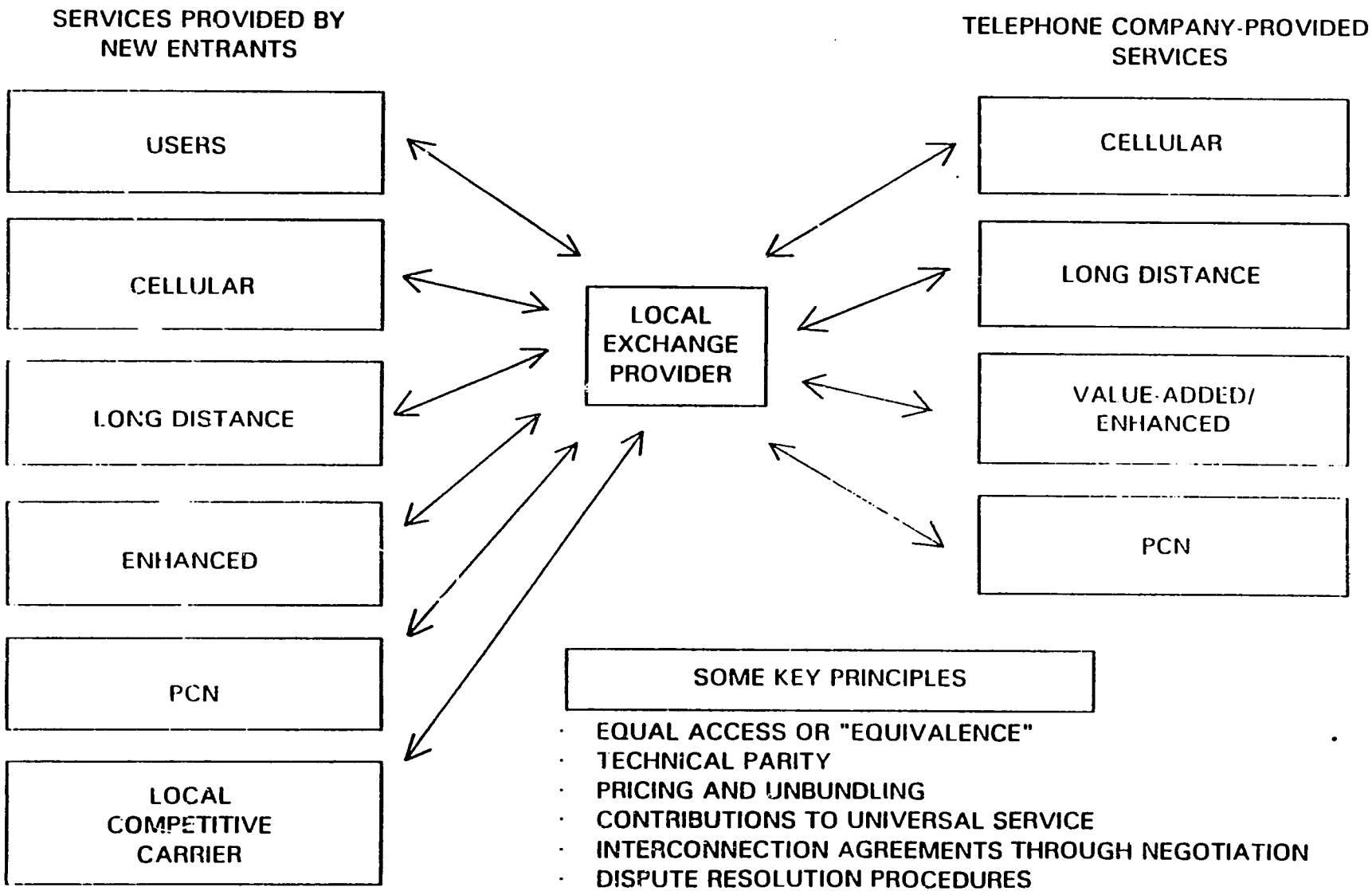

SOME KEY PRINCIPLES

- EQUAL ACCESS OR "EQUIVALENCE"
- TECHNICAL PARITY
- PRICING AND UNBUNDLING
- CONTRIBUTIONS TO UNIVERSAL SERVICE
- INTERCONNECTION AGREEMENTS THROUGH NEGOTIATION
- DISPUTE RESOLUTION PROCEDURES

OVERVIEW OF PART II

INSTITUTIONAL REFORM AND SECTORAL RESTRUCTURING

- Reasons for Sectoral Reform
- Some General Principles
  - -- Services vs. Facilities
  - -- Competitive vs. Monopoly Services
  - -- Other Boundary Lines
- Experience of Other Countries
  - -- U.S, Japan, EC, Germany, Netherlands, Finland, Australia
- Privatization
- New Techniques for Introducing Private Investment
- Overview of Sectoral Reform Options

DISTINCTIONS BETWEEN COMPETITIVE AND MONOPOLY SERVICES

MONOPOLY	U.S.	Local Exchange?
	FRG	Switched Voice and Infrastructure (except satellites)
	EC	Switched Voice, Packet Switching (on transitional basis)
COMPETITIVE	U.S.	Virtually All Services and Facilities
	Japan	Virtually All Services and Facilities (except switched voice services by resellers)
	Australia	Evolving Toward Fully Competitive Duopoly; All Services Competitive Except Restrictions on Pure Resale
	U.K.	Virtually All Services and Facilities After 1991 White Paper (except restrictions on international resale)
	FRG	Virtually All Services (Except Switched Voice Services) and Satellite Facilities (where switched voice services can be offered between eastern and western Germany)

DIFFERING REGULATORY DISTINCTIONS BETWEEN SERVICES AND FACILITIES

Services	Type II	JAPAN
	Basic and Enhanced	U.S.
	Nonreserved (with exception of switched voice services)	EC
	Competitive and Mandatory	FRG
Facilities/ Basic Infrastructure	Type I	JAPAN
	Reserved (with exception of satellites)	EC, FRG
	Public Telecom Operator (PTO)	U.K.
	Basic Services	U.S.

DISTINCTIONS BETWEEN CORE SWITCHING AND LOCAL SWITCHING

- Possible Boundaries for Telecom Infrastructure
- Different Purposes for Establishing Boundaries
  - -- Establishing Scope of Telecom Monopoly Over Services
  - -- Establishing Scope of Exclusive Role of State as Source of Financing

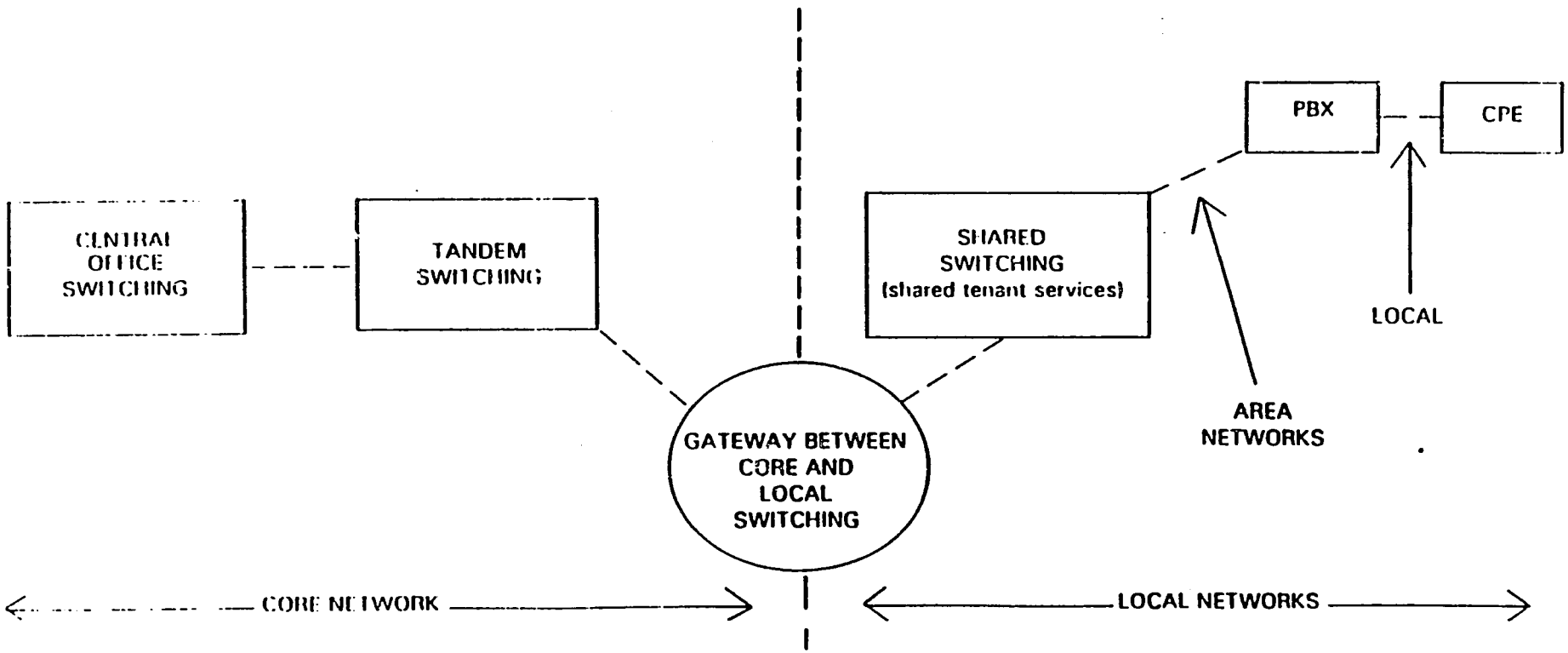

LINKAGES OF STRUCTURAL CHANGES AND NEW SOURCES OF FINANCING

SOURCES OF FINANCING IN CENTRALIZED VERSUS MARKET SETTING

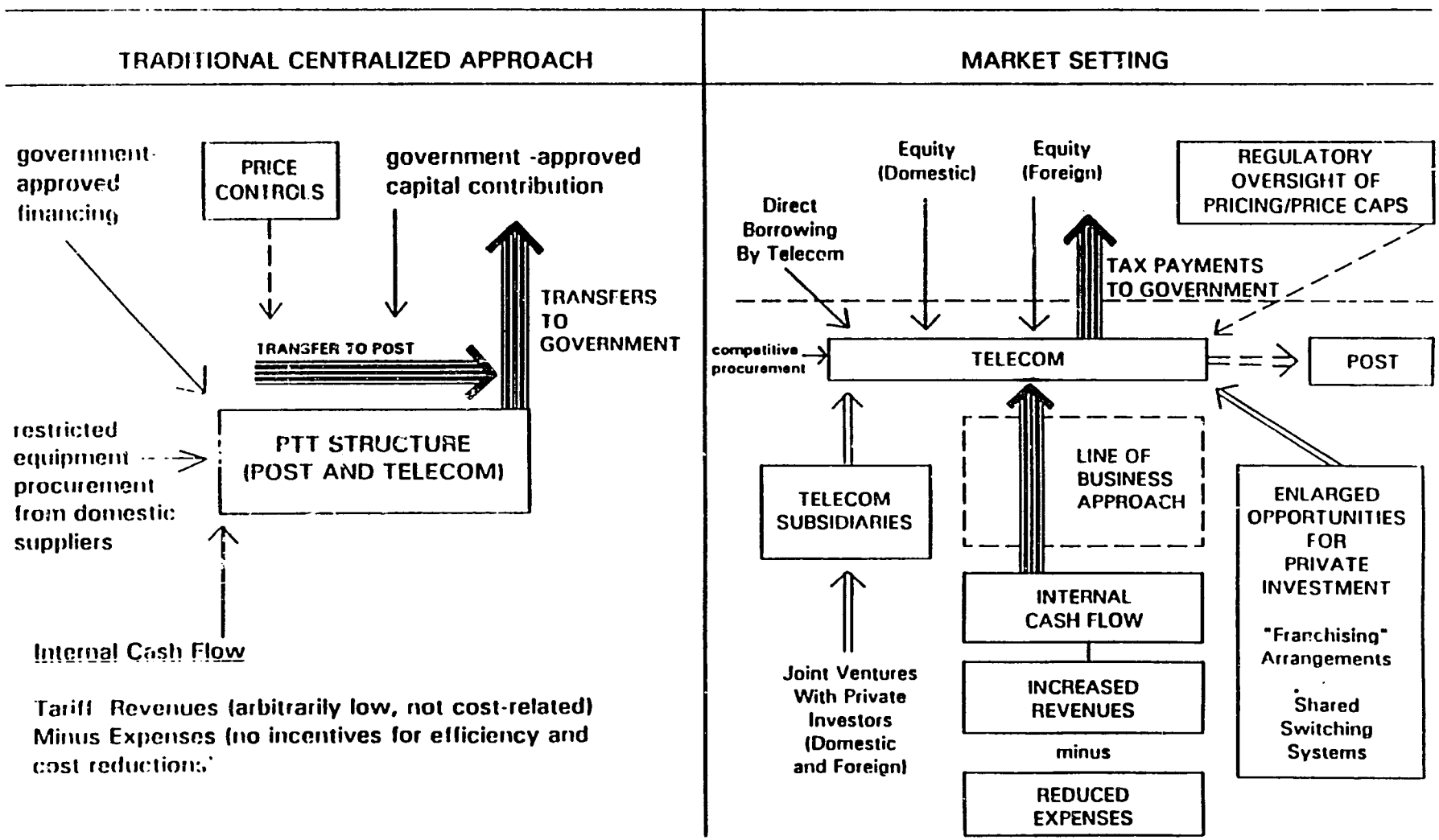

EVOLVING INSTITUTIONAL AND SECTORAL STRUCTURES REFORM AS A NONSEQUENTIAL PROCESS

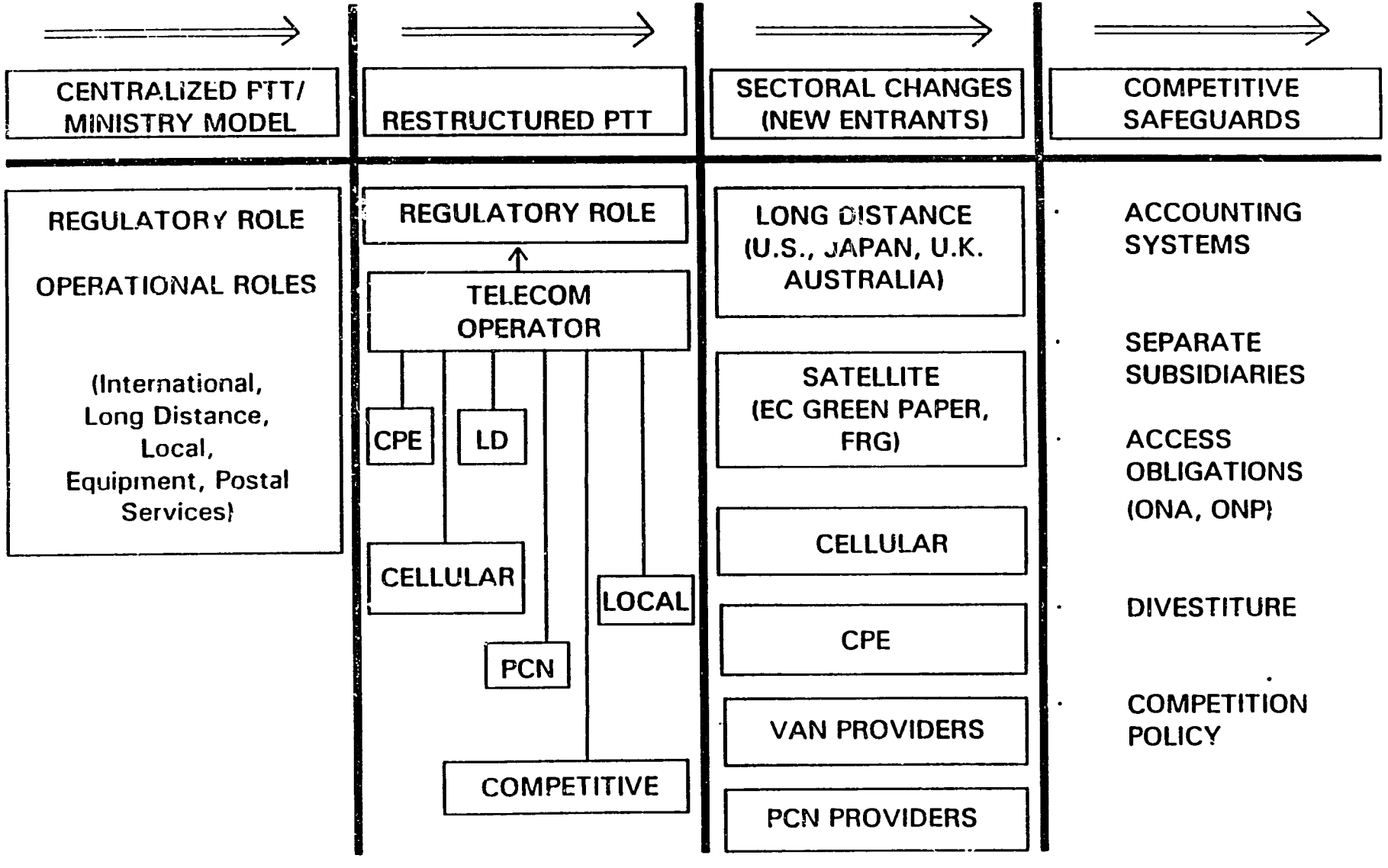

NEW MODEL FOR COOPERATIVE DEVELOPMENT OF TELECOM INFRASTRUCTURE

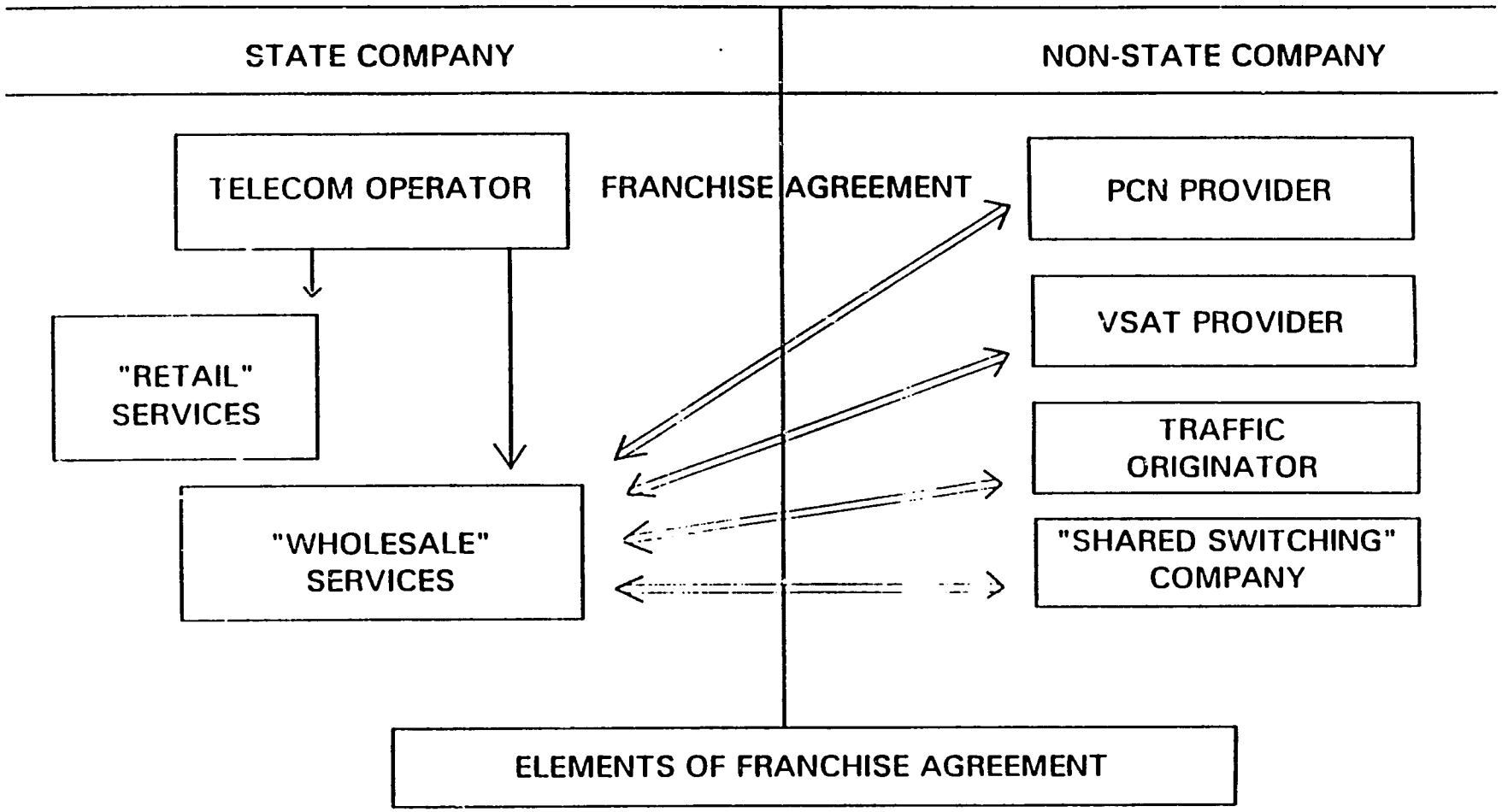

- DIVISION OF REVENUES
- PROVISION FOR "DIFFERENTIATED" PRICING
- TECHNICAL STANDARDS
- INTERCONNECT OPTIONS
- FRANCHISEE BUSINESS PRACTICES -- PRICES, WAGES

NEW MODEL FOR CONSTRUCTING TELECOM INFRASTRUCTURE:

DEVELOPING INFRASTRUCTURE AND INITIATING INSTITUTIONAL REFORM
VIA CONTRACTUAL OR FRANCHISE AGREEMENTS BETWEEN THE
TELECOM OPERATOR AND INDEPENDENT TRAFFIC ORIGINATORS

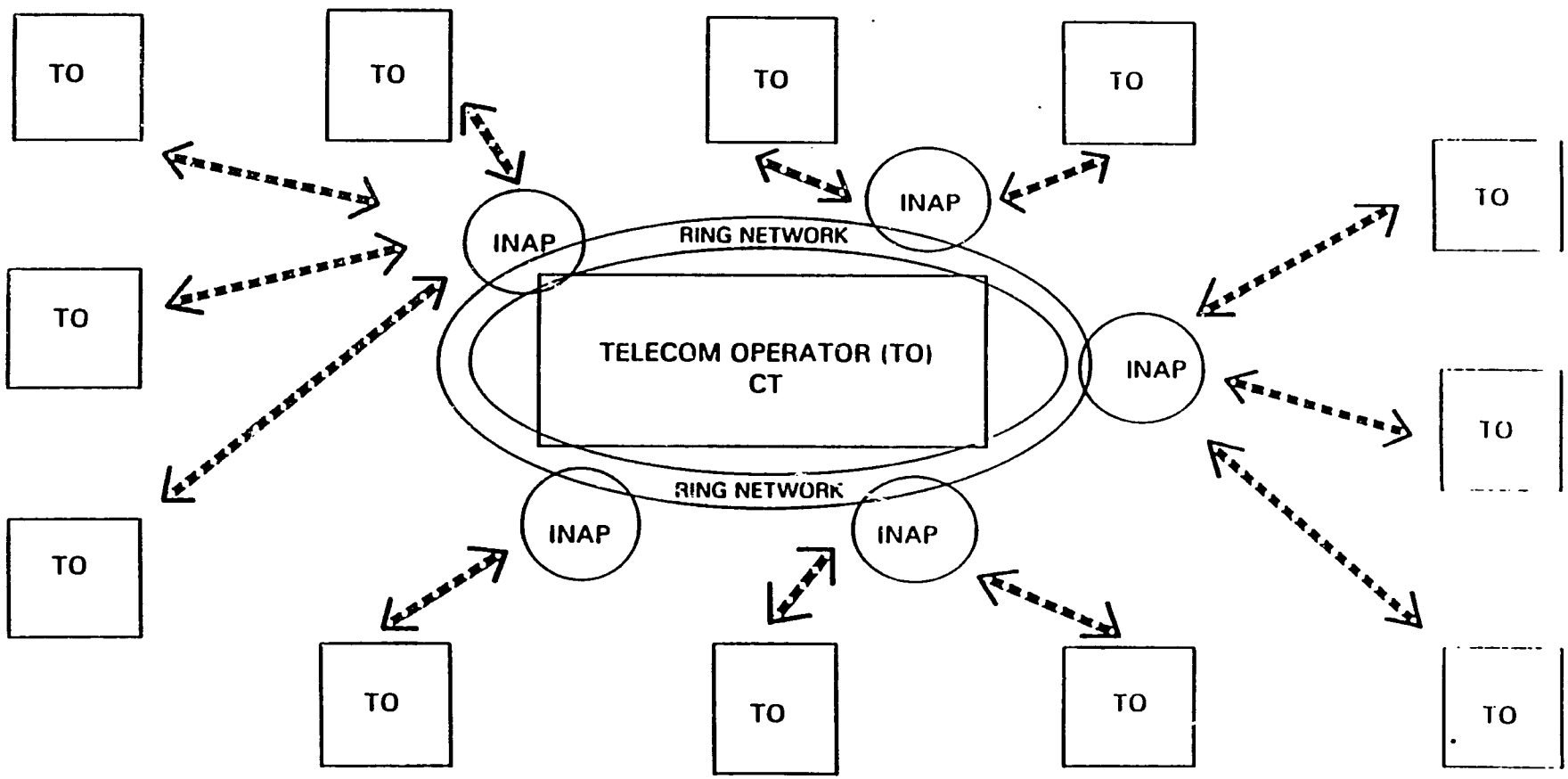

- FRANCHISE WITH BUY-OUT OPTION BETWEEN TO AND TELECOM OPERATOR
INAP - INTELLIGENT NETWORK ACCESS POINT
TO - TRAFFIC ORIGINATOR

ADVANTAGES OF NEW FRANCHISING MODEL

- Incentives for Managers
- Scheme to Introduce Private Investment and Begin Privatization Process
- Pricing "Differentiation"
- Model for Institutional Reform
- Permits Reintegration Into Telephone Company
- Incremental Approach -- Possible to Start in Parallel to Traditional Privatization Process
- Attraction for Domestic and Foreign Investors

ASSET-BASED FINANCING SCHEME (PARALLELS TO TECHNIQUE UTILIZED BY FRANCE TELECOM IN '70'S)

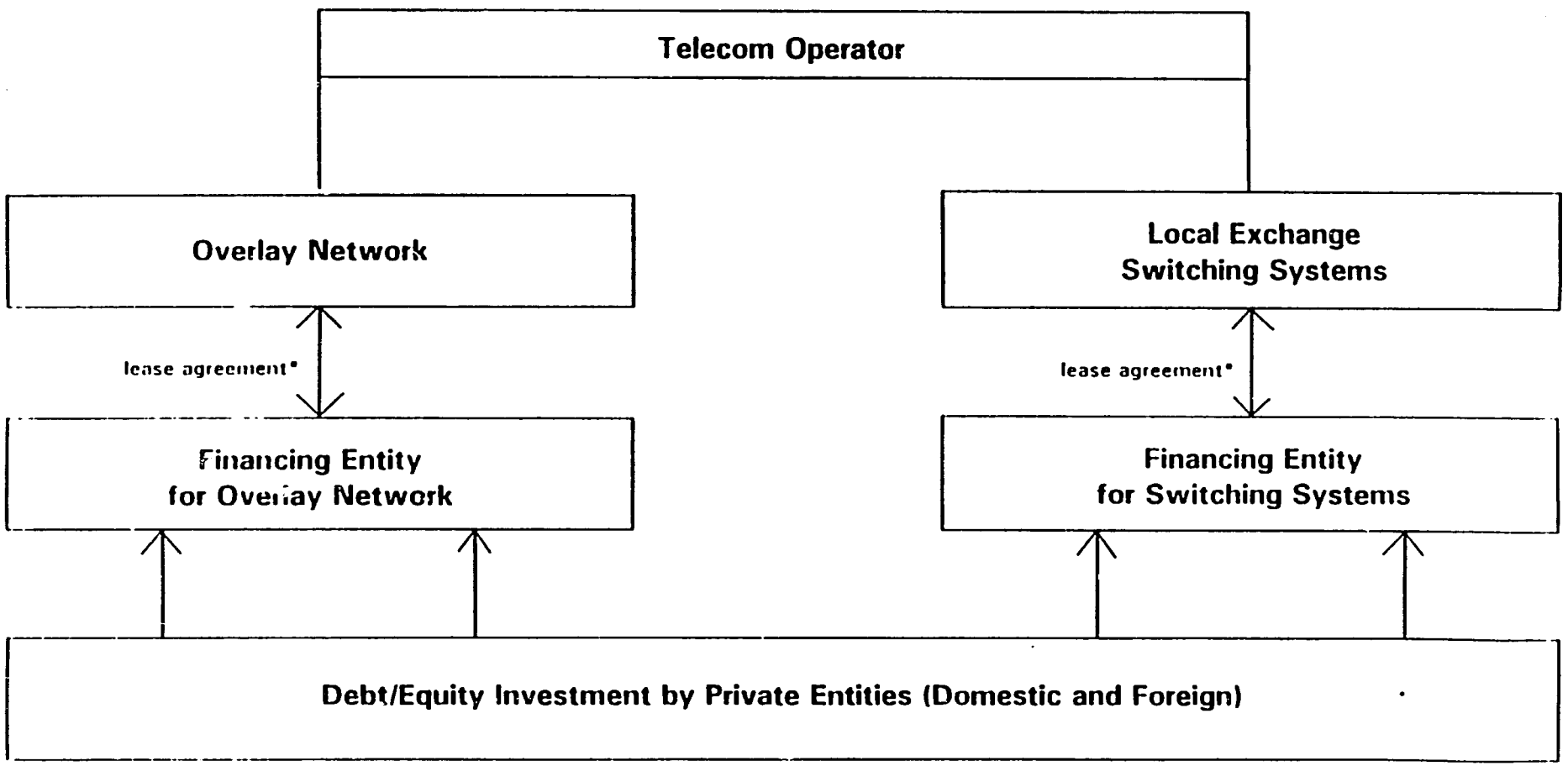

* with provision for "kicker" based on the operator's performance

Telecommunications Policies and Structures: An Overview of the Experience of the United States and Other Industrialized Countries

An Outline for a Seminar on Options for Restructuring and Reforming Telecommunications Policy

Robert R. Bruce
Jeffrey P. Cunard
Lothar A. Kneifel

Debevoise & Plimpton
Washington, D.C.
July, 1991

Previous Page Blank

OVERVIEW OF PRESENTATION

- U.S. regulatory process, procedures, and policies
- Regulatory trends and developments in other industrialized countries
- Common policy issues faced in reforming and restructuring telecom policy
- Privatization as a policy option: some long issues to be faced
- New techniques for introducing private investment in the telecom sector

Previous Page Blank

U.S. Regulatory Process, Procedures, and Policies

Previous Page Blank

THE U.S. TELECOM POLICY PROCESS

- Interaction of different institutions: Congress, Executive Branch, Courts, FCC, state, and local regulators
- Crucial Executive Branch Agencies: Commerce (NTIA, ITA), Justice, State, USTR, Defense, Executive Office of the President including OMB
- Special role of federal district court Judge Harold Greene overseeing the Modified Final Judgment (MFJ) ending AT&T antitrust case
- Role of federal courts of appeals in reviewing FCC decisions
- State public utility commissions (PUCs) oversee local rates and provision of service subject to preemption by FCC
- Municipalities, counties, sometimes states, regulate cable TV
- Preeminence of the FCC in establishing regulatory framework for domestic and international communications
- Increasing role of executive branch (NTIA, State, and USTR) in setting international telecom policy priorities
- Highly complex and open structure results in balancing differing policy interests and perspectives

OVERVIEW OF U.S. POLICYMAKING INSTITUTIONS

- Congress
- Department of Justice
- Department of Commerce -- NTIA and ITA
- United States Trade Representative
- State Public Utility Commissions
- Federal Communications Commission
- Courts

ROLE OF CONGRESS

- Many different roles in influencing policy
- Adoption of amendments to Communications Act of 1934: flexibility and continuity of original legislation
- Impact on the regulatory process of legislative consideration of amendments
- Role of oversight hearings by various Senate and House Committees and Subcommittees
- Impact of the appropriations process on FCC
- Informal influence of members of Congress: limits on legislative intervention in regulatory process

ROLE OF THE DEPARTMENT OF JUSTICE

- Intervention before the FCC with views on competition policy and its impact on FCC regulation
- Antitrust enforcement activity: two major antitrust cases against AT&T and oversight of mergers, industry structure, competitive practices in the telecom industry
- Enforcement of the Modified Final Judgment (MFJ)
- Representation of the FCC in judicial challenges to FCC decisions in federal courts: special role of the FCC and potential for conflicts between the FCC and Justice

ROLE OF UNITED STATES TRADE REPRESENTATIVE (USTR)

- Conduct of investigations and negotiations involving Omnibus Trade Bill
- Coordination of U.S. negotiating position in bilateral trade talks with EC, Japan, Korea, Taiwan, and other important telecom partners
- Development of U.S. negotiating position in GATT involving application of principles for trade in services to the telecom sector -- drafting of Telecom Annex
- Formulation of U.S. position in U.S.-Canada Free Trade Talks and North American Free Trade Agreement
- Coordination with Department of State, FCC, and NTIA concerning IVAN Agreements

ROLE OF DEPARTMENT OF STATE

- Coordinator of U.S. international policy initiatives
- Role in instructional process for Intelsat and Inmarsat
- Leading role in preparations for and representation at all ITU and regional telecommunications conferences
- Development of U.S. position concerning special arrangements for the provision of international value added services
- Role in integrating U.S. international telecom policy with overall U.S. international political, economic, trade, and national security policies

ROLE OF THE FCC:
STRUCTURE OF FCC DECISIONMAKING

- Five member commission headed by a chairman with appointments by President and confirmation by Senate
- Commissioners all have a number of staff assistants
- FCC divided into bureaus with responsibilities for such areas as mass media regulation, private services, common carrier regulation
- Common Carrier Bureau has a staff of over three hundred lawyers, economists, and engineers
- Bureaus prepare recommended decisions that are considered by the Commission usually in public meetings
- FCC acts through notices of inquiry, notices of proposed rulemaking, as well as adjudicatory proceedings
- Industry interests and public have a major role in shaping FCC decisions through informal comments, written presentations, intervention in decisionmaking process

ROLE OF STATE PUBLIC UTILITY COMMISSIONS

- Under Section 2(b) of the Communications Act jurisdiction over intrastate rates and services is reserved to the states
- State jurisdiction is subject to preemption by the FCC based on criteria delineated in FCC and court decisions
- Some responsibilities are shared with FCC through federal-state joint boards as provided in Section 410 of Communications Act with FCC having the last word
- Trend toward increasing voluntary coordination of federal and state regulations concerning open network architecture (ONA) initiatives -- especially ONA-related pricing issues
- Primary oversight of local exchange rates and services and intrastate interexchange services
- Increasing focus on new techniques such as price cap regulation for overseeing local exchange services
- Substantial innovation at state level including ending control over rates and services by radio-based carriers
- State commissions are often sensitive to local consumer and political pressures
- Proposals for restructuring the federal-state regulatory framework: difficulties of recasting historic balances of authority between federal and state jurisdiction

THE FCC's REGULATORY PROCEDURES AND POWERS

- Communications Act of 1934
- The Decisionmaking Process
- Role of Common Carrier Bureau
- Flexible, Ad Hoc Approach to Decisionmaking
- Ensuring "Nonarbitrary" FCC Decisions

ROLE OF THE COURTS

- Federal Appellate Courts hear challenges to FCC decisions
- Federal district court (U.S. District Judge Harold Greene) has jurisdiction over consent decree ending antitrust suit against AT&T

FCC DECISIONMAKING PROCESS

- FCC staff, carriers, or users identify potential policy issues
- Common Carrier Bureau staff proposes that Commission issue a Notice of Inquiry (NOI) or Notice of Proposed Rulemaking (NPR)
- Commission votes to release NOI or NPR with specified comment period -- 30 to 90 days, for example
- Interested parties offer written and oral comments on public record
- Interested parties offer reply comments based on comments of other parties
- Common Carrier Bureau prepares a recommended decision for the Commission
- Commission votes on the proposed decision -- after period for informal consultation open to interested parties but followed by insulation of Commission prior to decision
- Interested parties seek reconsideration or judicial review

COMMUNICATIONS ACT OF 1934: AN OVERVIEW OF ITS STRUCTURE

- Title I: Definitions of wire and radio communications, common carriage; delineation of scope of FCC and state jurisdiction; definition of scope of FCC "ancillary powers"
- Title II: Sections 201 (interconnection and services), 202 (discrimination), 203 (tariff filings and review), 205 (prescription of rates), 208 (complaints), 214 (certificates)
- Title III: Oversight of spectrum allocation and licensing, foreign ownership restrictions, sanctions

FLEXIBLE, AD HOC APPROACH TO DECISIONMAKING

- FCC operates under broad authority of Communications Act of 1934, as amended
- Communications Act accords leeway to the FCC to refine and adapt regulation to the realities of the market
- Transition from monopoly to competitive structure implemented without major amendments to the Act
- Communications Act is not a detailed blueprint for the future
- FCC fills in details, adopts new policies, resolves disputes
- Step-by-step or evolutionary process is facilitated by focus on open procedures for policy-making and dispute resolution
- Sharp contrast with more rigid approach often followed under civil law where issues are resolved in detail and in advance
- Flexibility is crucial in technology-driven environment where changes in market structure require new policies and raise new controversies

ROLE OF COMMON CARRIER BUREAU

- Center of initiative on telecom and telephone matters
- Headed by a Bureau chief and staff with a number of crucial divisions
- Policy division sets overall strategy
- Tariff division focuses largely on RBOC access tariffs, implementation of price cap regulation, some AT&T tariff issues
- Facilities division deals with authorization of new infrastructure especially based on Title III radio licenses
- International division oversees international tariffs, services, settlements process and coordinates with other administrations
- Economics and accounting division deals with issues involving uniform systems of accounts, accounting standards and safeguards, depreciation issues

A REVIEW OF U.S. REGULATORY POLICY

- Competition in Facilities
- Competition in Services
- Price Regulation, Competitive Safeguards, and Foreign Ownership Restrictions
- Federal State Jurisdiction
- International Services

ENSURING "NONARBITRARY" FCC DECISIONS

- Checks and balances in decisionmaking process
- Opportunity for comment by affected parties before FCC decisions
- Role of "expert" staff of Common Carrier Bureau balanced by policy-oriented and political input of five Commissioners
- Independence of FCC from direct control of the executive branch
- Oversight of the FCC by Congress
- Ability to challenge FCC decisions in federal appellate courts

Competition in Facilities

--Deregulation of Interexchange Services

--Impact of MFJ

--Satellite Services

--Cellular Services

--Cable-Telephone Relationship

--Competition in Local Facilities

KEY DEFINITIONAL ISSUES IN U.S. REGULATION

- Definition of a "common carrier" under Communications Act
- Distinction between "basic" and "enhanced" services in the FCC's Computer II and III proceedings
- Distinction between a "private carrier" and a "common carrier" -- Specialized Mobile Radio Service (SMRS) versus traditional mobile or cellular service, single-customer offerings by AT&T
- Key criteria under NARUC decision: offering to general public on indifferent basis and need to regulate
- Distinction between provision of "facilities" and "communications services" -- FCC decisions that provision of satellite transponders is not a common carrier service and that provision of fiber optic cable provided to carriers did not require FCC authorization
- Distinction between "carriers" and "customers"
- Distinction between "dominant" and "nondominant" carriers -- regulation is focused on providers of "bottleneck" or "essential" services
- Differences in regulatory treatment follow from differences in classification
- Regulation is relied on only where competitive or market pressures are inadequate

DEREGULATION OF INTEREXCHANGE SERVICES

Forbearance from Regulating Resellers

- In 1982 the FCC introduced forbearance from applying the tariff filing requirements of § 203 and the entry and exit requirements of § 214 to all resellers and to specialized common carriers

Forbearance from Regulating Non-Dominant Carriers

- In 1984, FCC extended forbearance to all remaining domestic non-dominant carriers, subjecting non-dominant carriers to streamlined Title II regulation
- Dominant carriers are carriers that possess market power, defined as "the ability to control price in the marketplace"
- Non-dominant carriers are carriers that do not possess market power
- The FCC regulates virtually all domestically-owned carriers as non-dominant except AT&T and the Regional Bell Operating Companies (RBOCs)

Forbearance from Regulating International Carriers

- Non-dominant international carriers are also subject to streamlined regulation
- International carriers in which a non-U.S. telecommunications entity has a 15% or greater ownership interest are defined as dominant
- Domestically-owned U.S. international carriers that are dominant do not receive streamlined regulation

DEREGULATION OF INTEREXCHANGE SERVICES

Forbearance Versus Definitional Approach

- FCC has two bases for refraining from regulating under Title II
- Forbearance approach: FCC can refrain from imposing regulations if the forbearance effectuates the Communication Act's goals
- Definitional approach: the FCC can refrain from regulation by limiting the definition of the term "common carrier"
  - The Act defines "common carrier" as an entity engaged as a common carrier for hire

CONSEQUENCES OF DEREGULATION AND DIVESTITURE: IMPACT ON STRUCTURE OF U.S. TELECOM PRICING

- Competitive entry in specific sectors such interexchange services creates incentives for cost-based pricing
- Established carrier like AT&T motivated to eliminate embedded subsidies of local services by interexchange services
- Divestiture and line-of-business restrictions in MFJ necessitate steps by RBOCs to recover costs of local services fully
- Potential for competitive entry and bypass requires local carriers in low-cost areas to eliminate cross subsidies of high-cost areas and carriers
- Subsidies for low-income subscribers and high-cost areas must be more targeted and transparent
- Incentives are created for development of new technologies likely to reduce cost of services
- Services are unbundled and offered on nondiscriminatory basis

IMPACT OF THE MODIFIED FINAL JUDGMENT

- U.S. District Judge Greene has enormous power to influence the structure of regulation and competition in the U.S.
- Congress is scene of ongoing confrontation among RBOCs, AT&T, and interexchange carriers and others over whether MFJ should be modified or its enforcement should be shifted to FCC
- MFJ imposes restrictions on RBOC involvement in major lines of business -- interexchange services, information services, manufacturing
- Judge Greene has under active consideration a proposal to modify the current restriction on RBOC participation in information services
- Congress is actively considering proposal to ease restriction on RBOC involvement in manufacturing
- Judge Greene has granted waivers permitting RBOCs to invest in foreign carriers being privatized (in Mexico and New Zealand) in order to permit RBOC involvement in international services
- Judge Greene has granted waiver in connection with RBOC investment in competitive Japanese international carrier IDC involving 10% equity stake

SATELLITE SERVICES

Deregulation of Satellite Transponders

- FCC allows sale of individual transponders on a non-common carrier basis
- FCC does not license owners of transponders who do not own or operate satellites
- Transponders are not radio stations; only satellites as a whole are radio stations
- Transponders do not involve common carrier service because they are not held out to the public on an indifferent basis
- FCC deregulated transponder sales to further flexible and open domestic satellite policy
- FCC may prohibit sale if insufficient transponders are available on a common carrier basis

SATELLITE SERVICES

Domestic Regulation - The "Open Skies" Doctrine

- "Open skies" policy allows private companies to construct, launch and operate domestic communications satellites
- FCC processes applications by orbital slot
- FCC approves applications only where there is strict adherence to licensing standards
- Comparative hearings are not used to choose among applications for the same orbital slot
- FCC has not imposed many technical standards because it believes the private sector is better equipped to choose the best technology and implement new technologies

CELLULAR SERVICES

Regulatory Framework

- Federal Jurisdiction: FCC mandates a two-carrier market structure and controls technical standards
- Two commercial cellular systems (called A and B allocations) are allowed in each market
- RBOC Involvement through separate subsidiaries
- State Public Utility Commissions may require initial certification and filing of annual reports, and may set rates and charges
- Interconnection Guidelines - to permit completion of calls to and from the landline network
  - Interconnection upon reasonable demand
  - Local Exchange Carriers must provide cellular service providers with terms equivalent to that provided to the carrier's cellular affiliate
  - Good faith negotiations
  - Cost-based Rate-setting
  - Mutual billing

SATELLITE SERVICES

Deregulation of Receive-Only Earth Stations

- Most C-band and Ku-band receive-only earth stations are subject to optional licensing
- Licensing is not required because the threat of interference to or from these earth stations is small
- FCC will assure interference-free operation if an operator gets a license

Very Small Aperture Terminals ("VSATs")

- FCC will issue single license for an entire network of transmit/receive VSAT earth stations
- To qualify for a single license, a VSAT network must consist of identical (or groups of identical) Ku-band earth stations

International VSAT Issues

- Non-common carriers can own and operate transmit/receive earth stations that access INTELSAT for transmission of INTELNET and IBS services
- FCC uses simplified licensing procedures for VSATs

CELLULAR SERVICES

Private Systems as Cellular Equivalents

- Digital Cellular Services, while allowing more efficient spectrum use, raise difficulties with conversion, are more expensive
- Personal Communications Systems (PCS), cordless mobile units that can communicate with a base station, are lighter and more portable, require smaller cells and use digital technology
- Personal Communications Networks (PCN): cordless digital radiotelephone networks that are self-contained but can be connected to landline networks
- Areas of difficulty in implementing PCS and PCN include spectrum allocation, jurisdictional disputes, and technical standards

CELLULAR SERVICES

Frequency Allocation

- 1970 - FCC allocates 75 MHz of UHF Spectrum
- 1974 - FCC decreases allotment to 40 MHz; 20 MHz to each market participant
- 1986 - FCC allocates an additional 10 MHz to cellular systems

Licensing

- Initial License term of 10 years
- Licensees are selected through comparative hearings in largest thirty markets, through lottery in remaining markets
- Transferability: license may be transferred following system construction, but FCC has been liberal regarding pre-construction transfers

RELATIONSHIP OF CATV AND TELEPHONE INDUSTRIES IN THE UNITED STATES

- Telephone companies are foreclosed from being providers of CATV services except in rural areas
- Telephone companies can provide transmission services to CATV operators
- Restrictions are included in the Communications Act, FCC regulations, the MFJ
- Telephone companies are seeking to overturn restrictions in the Congress, before the FCC, and Judge Greene
- New options for collaboration between the CATV and telephone industries may emerge -- but U.S. is now committed to having separate networks for cable and telephone services

CELLULAR SERVICES

Resale

- Cellular providers are required to sell capacity on a wholesale basis to resellers
- Safeguards necessary to assure nondiscriminatory treatment of resellers unaffiliated with cellular provider
- Resellers facilitate the marketing of cellular service
- States oversee wholesale tariffs provided to resellers
- Long-term role of resellers in cellular market
- Cellular resellers and shared tenant service providers as mechanism potentially useful in countries with underdeveloped infrastructure

Competition in Services

--Resale and Sharing

--International Resale

--Enhanced Services and ONA

--Intelligent Networks

Previous Page Blank

LOCAL COMPETITION

- Recent FCC proposal on local network competition would mandate nondiscriminatory local exchange carrier interconnection with competitive access providers, resulting in more competition in local loop
  - Proposal would also reduce access charges for competitive access firms
  - Proposal would require large local exchange carriers to permit rivals to install switching equipment on or near their premises
- Technologies that can bypass local network
  - Cable Television Systems have high bandwidth, two-way fiber networks, suitable for transporting telecommunications services
  - Digital Transmission Systems and Digital Electronic Message Service
  - Local area microwave delivery of digital data transmission
  - Cellular Systems potentially serve as an alternative to local wire-line service, particularly in rural areas
  - FM Subsidiary Carrier Authorization consists of the sidebands of the mainchannel frequency licensed to FM radio stations, used for paging and one-way data transmission
  - Specialized Mobile Radio Service
  - Local Area Networks employ coaxial cable for high-speed data transmission between machines
  - Shared Tenant Services
  - Satellite Services are useful for high volume customers; teleports bring the communications of numerous customers to a central earth station facility

RESALE

International Resale

- FCC permits, but does not require, resale and shared use of U.S. international telecommunications services
- In connection with its review of international settlement arrangements, FCC has proposed eliminating carrier restrictions on resale and shared use of U.S. international telecommunications services
- Alternatively, FCC has proposed eliminating such restrictions only with respect to countries implementing cost-based international accounting rates
- Rationale is to promote lower, more cost-based international accounting and collection rates

RESALE

Domestic Resale and Sharing

- Resale and sharing of otherwise idle circuit capacity lowers costs for users
- Unlike most countries, United States permits unlimited resale and sharing of domestic transmission facilities
- FCC in 1976 held that AT&T could not prohibit resale and shared use of services other than MTS and WATS
  - FCC hoped resale and shared use would promote competition and reduce need for oversight
  - FCC saw increased potential for new and innovative service arrangements
  - FCC ruled that resale constituted common carriage subject to regulation, but that shared use did not
- FCC in 1980 permitted resale and shared use for MTS and WATS services
  - In 1982, FCC decided to forbear regulating resellers
- Effect of permitting resale and shared use has been dramatic:
  - Competitive service providers in interexchange market could extend reach of own transmission networks by reselling AT&T's circuits
  - Unrestricted resale has resulted in market-based pricing and service; price differentials between MTS and WATS have narrowed

EVOLUTION OF ENHANCED SERVICE REGULATION

FCC's Computer I Decision (1971)

- Established regulatory boundary between Data Processing and Communications

FCC's Computer II Decision (1980)

- Distinguished between Basic Transmission Services and Enhanced Services
- Required carriers to use separate transmission facilities and separate corporate entities to provide basic and enhanced services ("structural separation")
- Required that enhanced service providers affiliated with AT&T and RHCs obtain facilities and services on same terms and conditions as unaffiliated entities

DEVELOPMENT OF SHARED TENANT SERVICES IN U.S.

- Common use within a residential complex or office of PBX or special switch that is connected to switched network
- PBX or switch available on partitioned or unpartitioned basis
- Shared services arguably increase efficiency of use of access trunks (estimates of 10-50% fewer lines)
- FCC declined to preempt state regulation of shared tenant services
- States have sometimes attempted to impose geographic limits on service, restrictions on number of lines, or establish measured service rates or special trunk access tariffs for shared tenant services
- Local exchange carriers often guaranteed access by state regulation to subscribers in a residential complex served by a shared tenant service
- Implications of shared service systems as technique to meet unfulfilled demand for service in countries developing their telecommunications infrastructure

OPEN NETWORK ARCHITECTURE ("ONA")

The ONA Model

- ONA involves unbundling of BOCs' basic services into separate "building blocks," called Basic Service Elements ("BSEs")
- Enhanced service providers obtain access to these various unbundled BSEs through Basic Serving Arrangements ("BSAs")
- End user may also obtain Complementary Network Services ("CNSs"), which are optional, unbundled basic service features in order to receive or utilize an enhanced service
- Ancillary Network Services ("ANSs") may be useful to enhanced service providers

EVOLUTION OF ENHANCED SERVICE REGULATION

FCC's Computer III Decision (1986)

- Replaced structural separation requirements of Computer II with "non-structural safeguards"
- Nonstructural safeguards include:
  - Comparably Efficient Interconnection ("CEI"), enabling unaffiliated service providers to have access to network comparable to that provided by AT&T and RHC to affiliated enhanced service providers
  - Strict cost accounting regulations requiring separation of costs of regulated telephone service from costs of unregulated activities
  - Open Network Architecture (ONA) - Unbundling of network capabilities

Open Network Architecture (ONA) Model

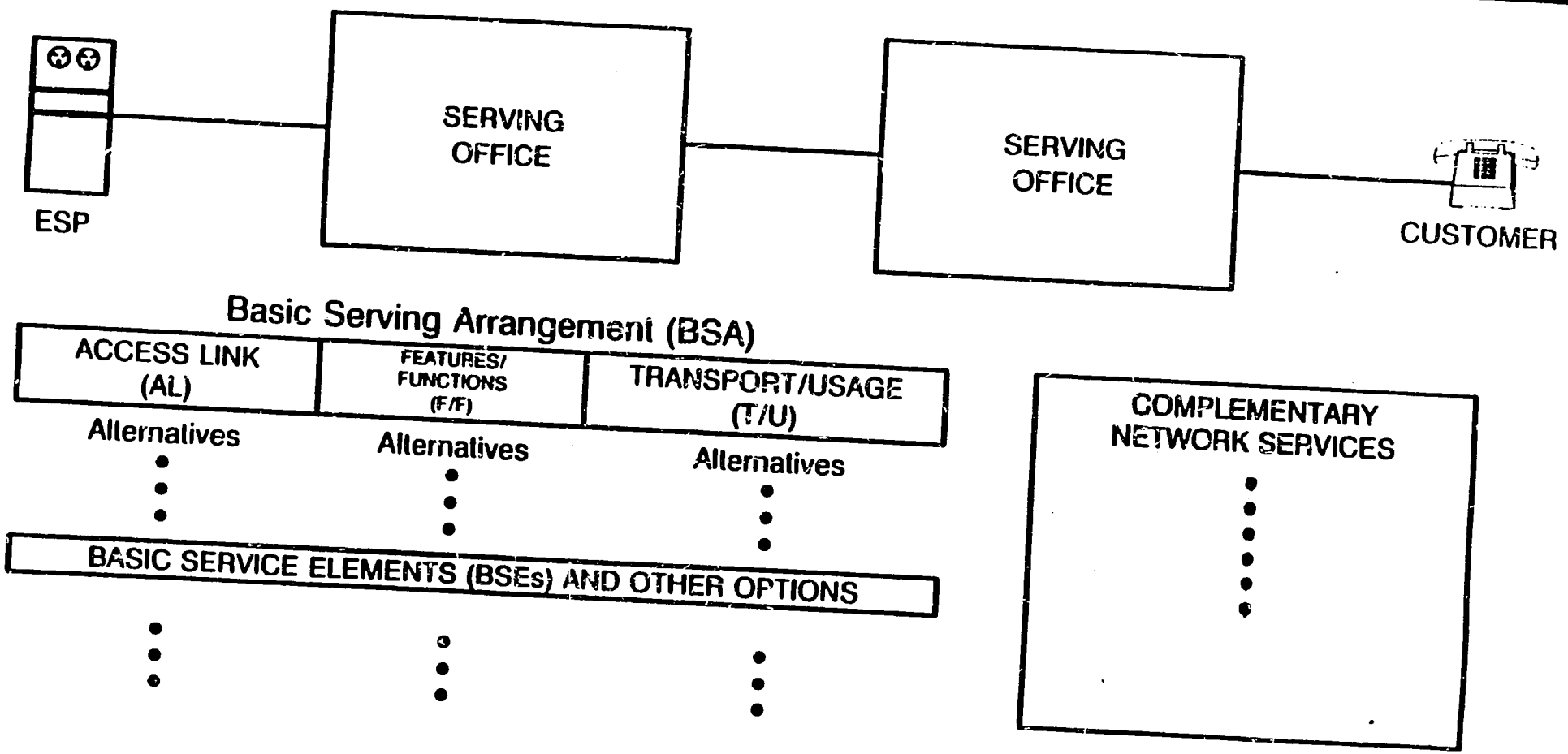

OPEN NETWORK ARCHITECTURE ("ONA")

Elements of ONA

- Basic Serving Arrangements consist of:
  - access link (connection between enhanced service provider and local network serving office)
  - features/functions component (provides enhanced service provider access to desired network functions)
  - transport/usage component (switched or dedicated connections that provide the link to customer's serving office or premises)
- Examples of Basic Service Elements ("BSEs"):
  - Calling Number Identification
  - Call Distribution with Queue
  - Network reconfiguration
  - Call forwarding
- Complementary Network Services ("CNSs") are used predominantly by end user rather than service provider. CNSs include:
  - Call forwarding
  - Speed dialing
- Ancillary Network Services include:
  - billing
  - collection
  - Network management

OPEN NETWORK ARCHITECTURE ("ONA")

Purposes of ONA

- Increase opportunities for enhanced service providers to have flexible and economical access to the regulated networks of the BOCs
- Serve as a nonstructural safeguard to prevent discrimination by the BOCs against competing enhanced service providers
  - In theory, ONA will reduce need for FCC regulation of BOCs by producing technological safeguards against anticompetitive activity
  - ONA, therefore, may offer an important reason for relaxing or eliminating the MFJ's line-of-business restrictions on the RHCs

OPEN NETWORK ARCHITECTURE ("ONA")

Development of ONA

- Development of ONA left to the industry
- Each RHC filed ONA plan covering the BOCs that it owns (concern that seven different ONA plans would not work together)
- FCC directed BOCs to revise initial ONA plans, to achieve greater uniformity in nomenclature, technical characteristics, availability, and deployment of ONA services
- In 1990, FCC approved the amended ONA plans of the BOCs, declining to mandate absolute uniformity in the offerings
- FCC continues to oversee development of ONA

OPEN NETWORK ARCHITECTURE ("ONA")

Contrast with European Community Approach

- European Commission has rejected unbundling as a strategy for expanding access to the basic network
- 1987 Green Paper on the Development of the Common Market for Telecommunications Services and Equipment proposed standardized network interfaces and access arrangements that is called Open Network Provision ("ONP")
- ONP involves standardizing a limited set of standard network functions and interfaces, not comprehensively unbundling PTT networks

OPEN NETWORK ARCHITECTURE ("ONA")

Jurisdictional Issues

- Unbundling of the BOCs' networks raises difficult federal-state jurisdictional issues
- FCC and the states have been struggling over tariffing ONA capabilities
- Federal tariffs apply to BSEs that are integral to end-to-end interstate communication, but states are free to establish their own tariffs for intrastate ONA services
- Co-existence of federal and state tariffs for similar access capabilities will assure a migration of the levels of non-cost-based state tariffs toward the price levels of ONA capabilities subject to FCC tariffs
- FCC established the federal-state joint conference on ONA issues in order to foster federal/state coordination on ONA matters
  - In May 1991, conferees agreed that enhanced services should not be regulated, but failed to resolve differences on federal-state jurisdictional issues
  - Consensus on tariff issues was determined to be unobtainable

INTELLIGENT NETWORK ARCHITECTURE

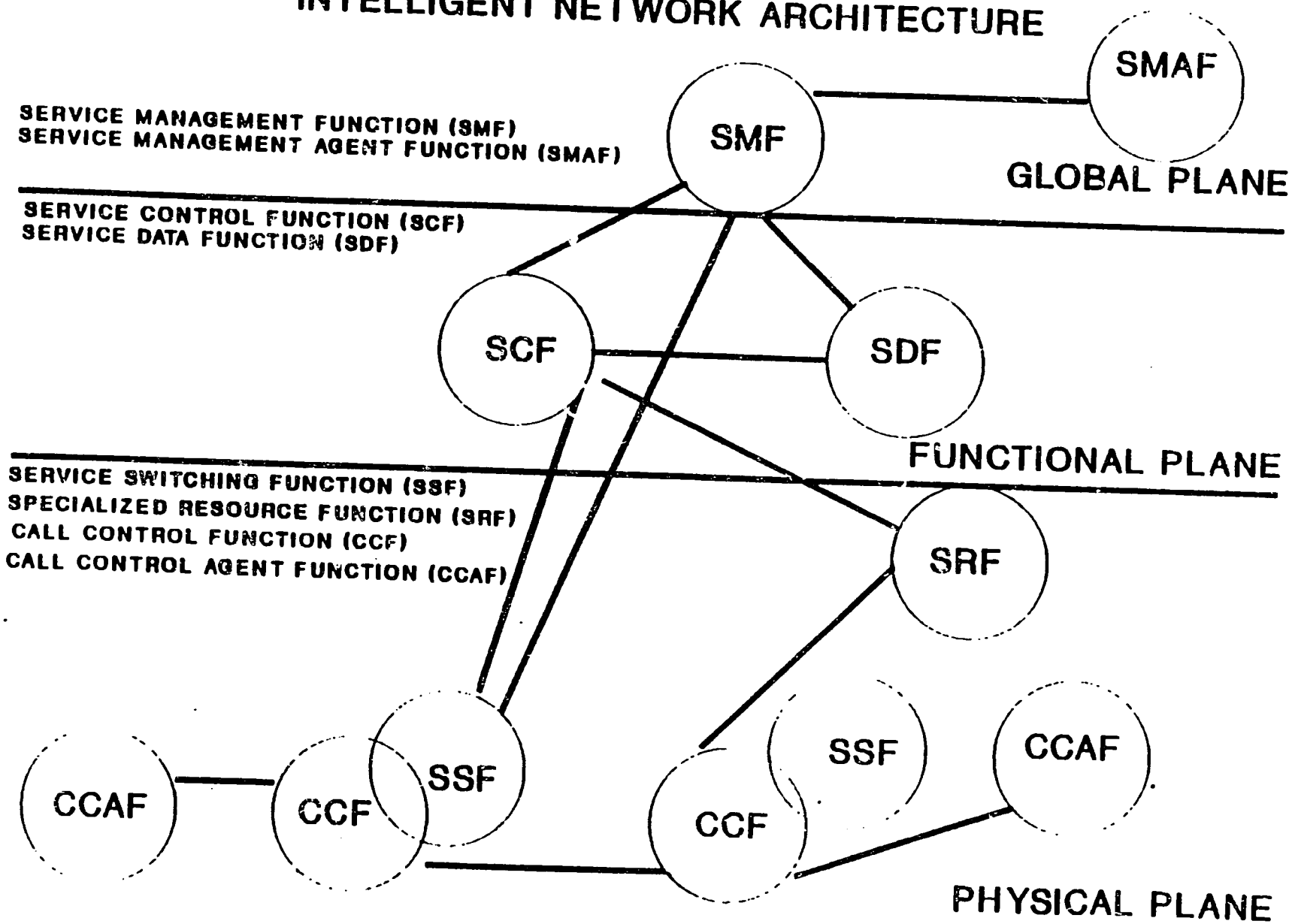

FUTURE TRENDS IN U.S. REGULATION: EMERGENCE OF "INTELLIGENT" NETWORKS

- Capability to control the operation of telecom networks migrates to "level" above switching and transmission facilities
- Telecom network is "programmed" like a distributed processing system
- New generation of interconnection issues emerges -- not merely "physical" but "software" interfaces
- Control of network infrastructure by "new entrants" -- operators of PCN or other services
- Control of network infrastructure by carriers outside national regulatory jurisdiction
- Impact on incentives of carriers to invest in and own network infrastructure
- Separation of "facilities," "operations," and "services"
- New arrangements for investment in facilities -- international and domestic approaches converge

IMPLEMENTATION OF PRICE CAP REGULATION

- Concerns about traditional rate of return regulation -- incentive for overinvestment and inefficiency
- Price cap regulation sets cap on prices with adjustment for inflation, offset exogenous costs reflecting productivity gains and flow-through of exogenous costs -- Cap = P x (price index - productivity factor)
- FCC differentiates between price caps for interexchange carrier AT&T and local exchange carriers -- AT&T price cap introduced first effective July 1, 1989
- AT&T's services are divided into three "baskets" with separate caps -- residential, 800 services, other business
- Price caps have a floor and ceiling -- price changes outside FCC-set bounds must be on 45 or 90 day prior notice to FCC
- Price caps for local exchange service also raise difficult issues concerning the number of "baskets"
- Implementation of price complicated by the de-averaging or "de-pooling" of local access charges
- FCC implemented price caps for local exchange services effective July 1, 1991

Price Regulation, Competitive Safeguards and Foreign Ownership Restrictions

--Price Cap Regulation

--Access Tariffs

--Universal Service Obligations

--Accounting Safeguards

--Foreign Ownership

Previous Page Blank

FCC APPROACH TO ACCESS TARIFFS

- Access issues first confronted as a result of decision to permit facilities competition in the long distance field
- Initial controversies are resolved in FCC tariff proceedings but also through negotiations among AT&T and new entrants
- FCC established requirement of nondiscrimination -- insisting on comparable technical arrangements and access to network features for new entrants
- Prior to AT&T divestiture, the FCC proposed that AT&T and its long distance competitors should interconnect through equivalent tariffing arrangements
- MFJ added requirement for equal access augmenting FCC regulation
- Now with pressure from AT&T and new competitors, RBOC tariffs are very closely scrutinized by the FCC with respect to rates of return earned
- Large local exchange carriers have pressed for access tariffs aligned to cost to offset risk of bypass
- FCC has permitted "de-averaging" of local access tariffs

CRUCIAL ISSUES IN PRICE CAP IMPLEMENTATION

- Which prices are to be capped? Need to establish proper set of prices subject to price cap regulation
- Application of price cap to local exchange versus interexchange services
- Establishing the number of separate "price cap baskets"
- Safeguards to prevent cross-subsidization and predatory responses
- Need for basic cost accounting and allocation systems
- Periodic review of the results of price cap regulation -- benchmarks for retention or refund of profits
- Complexity of price cap versus traditional rate of return regulation

ACCOUNTING SYSTEMS AND STANDARDS

- Uniform System of Accounts allocates costs and revenues against specific lines of business; increases accuracy of accounting and prevents cross-subsidization
- System requires separation of revenues/costs attributable to federal and state jurisdiction
- FCC approval required for capitalization of AT&T's and RHCs' competitive subsidiaries
- AT&T and RHCs must file Cost Allocation Manuals as non-structural accounting safeguard against cross-subsidization and misallocation of capital costs
  - Manuals must distinguish among costs attributable to offering of basic services and enhanced services, and joint and common costs
  - Ensures that costs attributable to unregulated activities are not improperly ascribed to regulated monopoly activities
- Transactions between BOCs and their affiliates must be recorded at market price from price list or tariff. If market price is not so determinable, assets transferred from carrier to unregulated affiliate must be recorded at higher of net book cost or fair market value; assets transferred in the other direction must be recorded at the lower of net book cost or fair market value

UNIVERSAL SERVICE

- Access Charges distribute non-traffic sensitive costs; are primarily allocated between subscribers and interexchange carriers
- Subscribar Access Charges were phased in between 1982 and 1987; current cap for residential subscribers is $3.50
- "Lifeline Plans" reduce telephone bills for eligible customers by waiving access charges
  - funded through Access Charges paid by other customers and taxes on intrastate inter-LATA toll calls
  - FCC sets parameters, States administer
  - State programs vary - keyed to income level, age, status as "needy"
- Link-Up America program subsidizes fees for connection to the network
- Universal Service Fund subsidizes high-cost local exchange carriers

FOREIGN OWNERSHIP

Scope of Restrictions on Foreign Ownership

- Foreign government may not hold radio license
- Foreign person or entity may not hold common carrier radio license
- Foreign ownership of stock of corporation holding common carrier radio license may not exceed 20 percent
- Foreign ownership of parent of corporation holding a common carrier radio license:
  - Foreign share may not exceed 25 percent
  - Parent may not have foreign officer or partner
  - FCC may waive these restrictions if such would serve the public interest
- If FCC may find de facto foreign control of a common carrier radio licensee even if statutory limits are complied with

FOREIGN OWNERSHIP

Restrictions on Foreign Participation in the U.S. Telecommunications Market

- Few restrictions on foreign participation
- Restrictions (§ 310) apply to broadcast and common carrier radio station licenses (and aeronautical en route and aeronautical fixed radio station licenses)
  - common carrier microwave radio licenses
  - common carrier radio licenses
  - broadcast television and radio licenses

Federal-State Jurisdiction

--Federal Pre-emption of State Regulation

--Federal-State Joint Boards

--Need for Reassessment

FOREIGN OWNERSHIP

Foreign Participation or Ownership That Is Not Restricted

- Investment other than equity
- Communications that do not require broadcast or common carrier radio station licenses
- Telecommunications or other services provided solely through wire line facilities, including fiber optic cables, even if services constitute common carriage
- Cable television systems, including ancillary radio station licenses
- Networks that distribute television or radio programming
- Satellite master antenna television systems
- Satellite transponders
- Subscription broadcasting services
- Direct broadcast satellite services
- "Private carriage" of telecommunications services, where services are provided in a way that would not be considered "common carriage"
- Foreign carriers are free to lease, resell and provide common carrier services

FCC-STATE JURISDICTIONAL ISSUES

Why the Jurisdictional Controversy Arises

- FCC-State jurisdictional battles arise when the distinction between intrastate and interstate elements of communications facilities becomes difficult to determine
- Many elements of communications facilities are used both for intrastate service and for interstate service
- Increasing complexity of common carrier communications systems has provoked significant debate about precisely what a "carrier" is and when a carrier's service is purely "intrastate"
- FCC and states have fought over the definition of a common carrier
- FCC often has gained power to regulate by successfully arguing that an intrastate service is inseparable from interstate communications for purposes of regulation
- States have sought to segregate interstate and local components of a service in order to retain jurisdiction over the local components

FCC-STATE JURISDICTIONAL ISSUES

The "Dual" System of Regulation

- Communications Act that empowers the FCC creates a dual system of regulation
- States have power to regulate intrastate communications services
  - Section 2(b)(1) of Title I of the Act gives states exclusive jurisdiction over certain aspects of intrastate communications regulation
  - States' authority is limited primarily to regulating intrastate common carriers - local telephone services
  - States can also regulate some aspects of cable television systems, mainly franchising
- FCC has power to regulate interstate communications services and, sometimes, intrastate services
  - Title II of the Communications Act gives the FCC regulatory power over all "interstate and foreign communication by wire and radio"
  - Title II of the Act contains an explicit grant of jurisdiction to the FCC
  - The FCC has the power to preempt state regulation in areas that the states have jurisdiction to regulate

FCC-STATE JURISDICTIONAL ISSUES

History of the FCC-State Jurisdictional Controversy

- Until recently, the FCC role in preempting state regulation was not seriously challenged
- When the FCC began deregulation, issues began arising where states retained or imposed regulations that the FCC found counterproductive to the introduction of private competition
- The Computer II proceeding and FCC ancillary jurisdiction:
  - In the Computer II proceeding, the FCC allowed enhanced services to be provided without regulation as non-common carrier services by AT&T
  - The FCC was found to have the power to allow enhanced services without regulation because of FCC's ancillary jurisdiction

FCC-STATE JURISDICTIONAL ISSUES

Constitutional Basis for FCC-State Jurisdictions

- The dual regulatory system is consistent with the federal scheme of government in the U.S.
- Under the Constitution, the federal government is given the exclusive power to regulate interstate commerce (which includes interstate communications)
- Power over intrastate commerce is retained by the states because it is not specifically delegated to the federal government
- The reach of the federal government's interstate commerce power is very long
- Under the U.S. Constitution, a federal law or policy properly adopted by the federal government prevails over (or "preempts") a conflicting state law or regulation

FEDERAL-STATE JOINT BOARDS: COORDINATING NATIONAL TELECOM POLICY

- Under Section 410 of the Communications Act the FCC must convene a federal-state joint board consisting of a panel of FCC and state commissioners to deal with cost allocations between federal and state jurisdiction
- Four state commissioners participate with three FCC commissioners but the FCC has final word
- Joint boards have been utilized to deal with sensitive issues such as setting access charge structure
- More recently, a joint borad has addressed questions of jurisdiction over tariffing services available under FCC's ONA initiative
- State regulators have been very innovative and open to updating state regulation
- Inconsistent state regulation can exact a high price on telephone companies in integrated global economy
- Need to focus on future allocation of jurisdictional responsibility given globalization of the telecom sector
- Federal experience of U.S. may be useful in countries where allocation of responsibility between central and local authorities is emerging as an important issue

FCC-STATE JURISDICTIONAL ISSUES

History of the FCC-State Jurisdictional Controversy

- In 1986, the Supreme Court reversed and FCC decision preempting state regulation of depreciation rates and practices for intrastate services. Louisiana Public Service Comm'n v. FCC, 476 U.S. 355 (1986). The decision noted that FCC could preempt state regulation only in areas "where it was not possible to separate the interstate and the intrastate components of the asserted FCC regulation"

- Court of Appeals' review of the Computer III proceeding also limited the FCC's jurisdiction

  - The Ninth Circuit narrowed the FCC's ability to preempt state regulation on the basis that it frustrates the goals of the Communications Act. California v. FCC, 905 F.2d 1217, 1242-1245 (9th Cir. 1990). The Court held that FCC has burden of demonstrating that the FCC action is narrowly tailored to preempt only such state regulations as would negate valid FCC regulatory goals

OVERVIEW OF FCC REGULATION OF INTERNATIONAL TELECOM SERVICES

- FCC authorizes construction of new transatlantic cables and satellite services under Section 214 and under Title III where satellite services are involved
- FCC has authority over international common carrier services
- FCC authority over "international private carriers" is unresolved
- FCC exercises no authority over the provision of international enhanced services
- FCC has demonstrated growing concern over "bypass" of international settlement arrangements through resale of international circuits and direct connection of private lines to switches in the U.S.
- FCC has become increasingly active in response to disparities between U.S. and overseas collection and settlement rates for international services
- Department of State, FCC, NTIA, and USTR have collaborated in negotiation of agreements for provision of international value-added networks (IVANS) -- with Japan, U.K., Hong Kong, and other countries

International Services

--International Settlements

--Private International Satellite Services

--Private International Cable Systems

--Evolving International Framework

INTERNATIONAL SETTLEMENTS

Definitions

- "International settlements" refers to the accounting system that allocates between the various service providers the costs of maintaining international common carrier services on non-private lines
  - In 1988, the U.S. had an international settlement deficit of U.S. $2 billion
- International Accounting Rate is the basis for payments between international carriers for the provision of international telecom services

FCC OVERSIGHT OF INTERNATIONAL SETTLEMENTS

- FCC Further Notice of Rulemaking in May 1991 to oversee international settlements
- Common Carrier Bureau to study calling rates, progress in negotiating accounting rate reductions by 1/1/93
- FCC to develop procedures for dealing with egregious cases
- Pressures will be strong to reduce foreign end calling rates and settlement rates
- Foreign carriers will have to compensate through realignment of national tariffs, particularly local exchange tariffs
- New settlement arrangements -- including more flexibility for end to end services -- are likely to emerge

INTERNATIONAL SETTLEMENTS

Impact On Pricing and Spill-Over Internationally

- FCC is most concerned about countries that the U.S. believes have no need for subsidization but that retain advantages for their nationals through higher costs to U.S.-based persons
- FCC recognizes the need for subsidies to developing countries
- Pressures will be strong to reduce foreign end calling rates and settlement rates
- Foreign carriers will have to compensate reduced international revenues through realignment of national tariffs, particularly local exchange tariffs
- New settlement arrangements -- including more flexibility for end to end services -- are likely to emerge in the future

INTERNATIONAL SETTLEMENTS

FCC Settlements Policies and Proceedings

- FCC Further Notice of Rulemaking in May 1991 to oversee international settlements
- Common Carrier Bureau to study calling rates, progress in negotiating accounting rate reductions by 1/1/93
- FCC to develop procedures for dealing with egregious cases
- New ISP seeks to balance international accounting rates between U.S. and foreign service providers, and maintain uniform settlement agreements for international record carriers on parallel international routes
- Revised ISP attempts to tie international accounting rates to cost of service
- The FCC's objectives in the ISP are:
  - universal service,
  - prevention of uneconomic bypass,
  - encouragement of network efficiency,
  - elimination of unjust discrimination or unlawful preferential rates
- FCC revised the 1986 ISP for two main reasons:
  - to reduce the massive U.S. settlement deficit, and
  - discourage "whipsawing"

PRIVATE SATELLITE SYSTEMS

Current U.S. Regulations and Policies

- In 1984, President Reagan declared that separate international communications satellite systems were in the U.S. national interest
- Private international communications satellites can offer a variety of services, such as intracorporate communications and some video services
- Private systems cannot interconnect with the PSTN
- Private systems cannot provide services on a common carrier basis
- FCC retains these restrictions because of INTELSAT treaty obligations

Interconnection with the PSTN

- FCC is moving towards allowing private satellite systems to interconnect with the PSTN
- Both FCC and the executive branch are considering redefining INTELSAT obligations to allow international private satellite service to interconnect with the PSTN

PRIVATE INTERNATIONAL CABLE SYSTEMS

- It has become harder to differentiate carrier-provided and private systems
- Private cables can offer private and common carrier services
  - FCC reasoned that private cables would promote competition in the provision of international facilities and stimulate technology and service development
- Private cables can set prices according to market demand whether the capacity is used to provide common carrier services or not
- FCC controls the diversion of common carrier service from regulated cables to private cables

EVOLVING NEW INTERNATIONAL FRAMEWORK: ROLE OF FCC, ITU, GATT

- Uruguay Round discussions raise questions concerning application of trade in services principles to telecom sector
- Proposed telecom annex would deal only with value added services not with the provision of basic services
- Novel questions arise about the impact of GATT on future role of IVAN negotiations and on Article IX agreements under WATTC regulations
- Discussions about open network architecture (ONA), EC approach to open network provision (ONP), and comparable Japanese initiatives may prove too complex for GATT or ITU
- Need for discussions separate from trade talks about future evolution of regulatory arrangements and policies around the world
- Need for more direct contacts among national regulatory officials

PRIVATE SATELLITE SYSTEMS

Long-Term Impact On Intelsat and Its Role

INTELSAT is under pressure from two fronts:

- private cable systems that are not so private anymore
- private satellite systems that are not so private anymore

INTELSAT recognizes that competition in interconnected services will happen

INTELSAT is rethinking its facilities investments on the theory that it will have to restructure to remain competitive if private systems are allowed to interconnect with the PSTN

Article 14D of INTELSAT Agreement requires INTELSAT approval of private satellite systems; applicant must show system's activities will not cause "significant economic harm" to INTELSAT

- This requirement has been eliminated for private satellite systems below 30 36-MHz transponders and not interconnected with PSTN

UNITED KINGDOM

Entry in Facilities

- Privatization of British Telecom
- Entry of Mercury
- Duopoly policy
- Proposal for open entry in facilities, at least domestically, in U.K. Government White Paper

Class Licenses for "Value-Added Services"

- No individual authorization
- Recent liberalization

Resale restriction removed in 1989

- International resale to be permitted, where reciprocal

Impact of changes

- Drop in BT prices
- New Mercury fiber optic trunk
- U.K. as telecommunications "hub" for Europe

Overview of Recent Developments in Other Countries

JAPAN

Transformation of NTT

- Unlimited, regulated entry in facilities (Type I carriers)
- Price regulation of New Common Carriers
- Limited entry in facilities-based international carriers

Distinction among tiers of "Value-Added" Services (General and Special Type II businesses)

Purity of "Horizontal" distinction between facilities and services eroded

- No domestic voice resale
- Breakdown of distinction in international services

Relationship between dominant and new entrants

- NCC negotiation for access to NTT network
- Type II providers want equivalent access to NTT facilities and sale of NTT Data

UNITED KINGDOM

Key to development of competition

- OFTEL is a strong, independent regulatory authority
- Political will to implement changes

Future issues

- Renewed attention being paid by OFTEL to interconnect issues, to increase efficiencies and reduce cross-subsidies
- Expansion of Mercury market share
- Emergence of new technologies

JAPAN

Reappraisal of Structural Arrangements

- Consequences of competitive entry in domestic and international sectors of the Japanese market
- Need for more formal and transparent regulation
- Reassessment of NTT's role and separation of domestic and international sectors
- Revisiting regulatory distinctions: Type I and Type II international carriers, IVANs and customers
- "Facilities" versus "Services" distinction: new look at the concept of "infrastructure"

JAPAN

Future Issues

- Dissatisfaction with continued dominance of NTT
- Further review of NTT status after divestiture proposal was postponed
- NTT to implement competitive safeguards and sell NTT mobile subsidiary
- Advocates of divestiture within NTT
- Need for more formal and transparent regulation
- Revisit regulatory distinctions in international environment between carriers/IVANS/customers

Impact of changes

- Three major terrestrial NCC competitors to NTT, but with small market shares
- Major inroads on some international routes by international NCCs
- Price drops in both domestic and international services
- Development of business-like orientation within NTT and KDD
- Over 900 Type II providers, mainly of services targeted at particular industry sectors

THE NETHERLANDS

Transformation of PTT into state-owned company in January 1989

- Continued monopoly in facilities and "basic" services
- Need to cut back on PTT's remaining monopoly in light of EC approach to "reserved services"
- Strategic thinking for customer orientation and "hubbing" in Europe

Unlimited entry in services

- No entry restrictions or other regulation of "value-added" services

FRANCE

Continued France Telecom monopoly in infrastructure and telephone services

- Consistent with European Community approach
- France Telecom not privatized, but transformed to state-owned corporation in July 1990
- Competitive spurs provided by subsidiaries offering different services

Gradual liberalization of "Value-Added" Services

- Driven by information suppliers
- Simple declaration for most services (Category I); authorization for others (Category II)

Continual change in regulatory authority charged with overseeing sector: movement from Ministry, to independent authority, back to Ministry

EUROPEAN COMMUNITY

Broad, targeted approach

- Relationship between telecommunications sector and economic growth
- Concern with global "competitiveness"
- Tie together the Single Market

Competition authorities work with regulatory-sectoral specialists within the European Commission

- Combination of individual case approach -- attack on monopolies or anticompetitive practices -- with efforts to establish rules for the sector
- Involvement of European Court of Justice

1987 Green Paper

- Open all telecommunications services to competition except for infrastructure and switched voice telephone services
- Provision of telecommunications equipment liberalized
- Movement to liberalize satellite services

FEDERAL REPUBLIC OF GERMANY

Viewed as a conservative and traditional environment

- Transformation of Deutsche Bundespost: Deutsche Telekom as a separate subsidiary
- Deutsche Telekom monopoly over infrastructure and public switched voice telephony

Unlimited competition in other services

- All other services open to competition and free from regulation; minimal notification procedure
- Deutsche Telekom can compete across-the-board in offering services; some services are "mandatory"

Separation of operational and regulatory responsibility, with regulatory authority in Ministry

RESTRUCTURING IN EUROPE: PRESSURES ON GREEN PAPER CONSENSUS

- Challenges to key elements of the EC Green Paper
- Pressure to widen scope of the EC Services Directive
- Need to expand scope of the ONP Initiative: Coping with open network architectures and access issues
- Pressures to permit facilities-based competition: EC Satellite Green Paper and Hermes Project
- Need to sharpen debate about the future role of emerging regulatory bodies
- EC consensus: the right option for Eastern Europe?

EUROPEAN COMMUNITY

Open Network Provision

- Establish harmonized technical, regulatory and tariff interfaces with networks for the provision of Community-wide services
- Future of ONP and its impact on market still unclear

Relationship between European Commission and the Member States

- Cooperative and adversarial at times
- Member States to implement Commission directives
- Devolution of regulatory authority to Member States

Challenge to monopoly on infrastructure in United Kingdom and other Member States

Common Issues Faced in Reforming Telecom Policy

Previous Page Blank

RESTRUCTURING IN SMALLER INDUSTRIALIZED COUNTRIES: SOME NOVEL INITIATIVES

PTT and private telephone companies in Finland: facilities-based competition in 1991 and prospects for competition in switched voice services

- Local cooperatives and national PTT
- National PTT transformed from government [illegible] to public corporation
- Independent national carrier, Datatie, formed by local companies competes with PTT in leased line, private network services and, possibly, interexchange cellular services

New Zealand: balancing privatization and unrestricted approach to new entry

- The great experiment -- open entry in facilities and services -- in a smaller economy
- No telecommunications-specific regulation: Ministry of Commerce oversight
- Privatized Telecom New Zealand acquired by American carriers (whose share is to be reduced to minority interest)
- New long distance competitor -- Clear Communications

Australia: merging Telecom Australia and OTC and opening unrestricted duopolistic competition based on Aussat and new Australian and foreign investors

Implications: (1) competition in small markets, (2) possibility of balancing privatization and open entry

Relevance of unconventional models for restructuring

APPROACHES TO DEFINING SERVICE-BASED COMPETITION: THE DISTINCTION BETWEEN "BASIC" AND "ENHANCED" OR "VALUE-ADDED" SERVICES

- Difficulty in drawing boundary lines
- Notion of deregulating or opening up to competition a certain class or type of services
- Basic/enhanced dichotomy in the United States and Canada -- technological distinction
- "Reserved" and "Not Reserved" -- regulatory distinction in European Community
- "Open to the public" or "closed" -- focus on economic impact, a distinction new in France
- Type I versus Type II: Japanese Approach
- VADS License in U.K.
- Dutch Approach: Ad Hoc Distinction

PRESSURE FOR DEREGULATION

Economic pressures

- Pricing that diverges from costs
- Cross-subsidization
- Rate rebalancing
- Incentive to make up shortfall from drop in international tariffs

Trade and competitiveness

- Rivalries among administrations
- Desire to become "hubs" for regional or transcontinental traffic

Technological

- National and regional satellite services press terrestrial tariffs
- Emergence of "private" facilities: fiber optic cables and satellites

AVOIDING OVERBREADTH IN LICENSING

- Japanese IVAN Regulation: No distinction between "Users" and "Carriers"
- Overbreadth inhibits innovation by users
- Dutch scheme minimizes licensing of all entries
- Prior Approval versus Notification: French Value Added scheme, Japanese regulation for Domestic Type II Entities

DEFINING THE SCOPE OF FACILITIES COMPETITION

- Complete Open Entry: United States (terrestrial, satellite-based, private carriers)
- "Virtual" Open Entry: Japan (DDI, Telaway, Nihon Telecom, JCS)
- Full Duopoly with Option for Unrestricted Entry: U.K.
- Options for Limited Facilities Competition: Canada (Telesat, CNCP); Australia (Aussat); Germany (satellite-based options); Finland (Dataway); Mexico (Telmex, Telecom, parastatals); India (National Railway, ONG)
- Restrictions on Facilities Competition: Netherlands, France, Spain, Italy, other EC member countries

SEPARATING REGULATION AND OPERATIONS

- Independent regulatory commissions: U.S. and Canada (important role of policy entities: NTIA, DOC)
- Oftel in U.K. and Austel in Australia
- Separate Regulatory Units within Telecom Ministry: France and Federal Republic of Germany
- Need for Dispute Resolution Procedures Rather than New Institutional Units

COMPETITIVE SAFEGUARDS

- Comparably Efficient Interconnection (CEI) and Open Network Architectures in the U.S.
- Accounting Safeguards
- Separate Subsidiaries for Major Lines of Business Activity
- Disclosure of Technical Information
- Protection against Misuse of Customer Proprietary Information
- Options for Different Mixes of Safeguards

TELECOM POLICYMAKING IN DECENTRALIZED POLITICAL CONTEXT: A VIEW

European Commission

- EC authority to issue directives under Article 90 has been upheld by European Court of Justice but scope of authority is not clear
- Political realities require EC to proceed in consultation with the Council of Ministries and under authority of Article 100
- Green Paper has required separation of operations and regulation and created new national regulatory bodies
- EC must take into account view of national regulators now emerging
- EC authority under Article 85 and 86 to enforce competition law obligations
- EC directives must be implemented by Member States
- Authority over radio licensing is in hands of Member States but new EC coordinating mechanisms and evolving

TELECOM POLICYMAKING IN DECENTRALIZED POLITICAL CONTEXT: A COMPARATIVE VIEW

U.S.

- FCC jurisdiction over interstate services and all spectrum allocation and licensing
- Preemption where state authority negates federal authority
- Formal mechanism for consultation with state PUCs through joint boards
- Informal consultations among FCC and states
- Municipal authority over cable
- Need for reassessment given globalization of sector

Canada

- CRTC has less authority than FCC to preempt
- Recent court decisions have strengthened hand of federal authorities in Canada
- Deregulation has been slowed by need for negotiation and consultation
- Negotiation has played a more important role than in U.S.
- Telecom jurisdictional issues entangled in overall political debate
- CRTC authority over radio licensing

INITIATING PROCESS OF SECTORAL REFORM

- Assemble committee of key agencies: Telecom, Finance, Planning, International Trade
- Undertake analysis of sectoral performance
- Focus on needs of key users -- Domestic and International
- Identify initial set of policy initiatives
- Develop mechanisms for implementation and dispute resolution
- Develop network of contacts to support reform process -- within region and beyond
- Focus on both PTT modernization and sectoral development
- Avoid excessive emphasis on privatization per se

DEVISING POLICYMAKING MECHANISMS IN A DECENTRALIZED CONTEXT: KEY ISSUES

- Need to assure integrated market and regulatory policy through harmonization, mutual recognition arrangements, or preemption
- Need to minimize the cumulative burden of regulation
- Decentralization of political authority can potentially conflict with deregulation and development of market mechanisms

Privatization as a Policy Option: Issues to be Faced

KEY OPTIONS FOR COUNTRIES DEVELOPING THEIR TELECOM INFRASTRUCTURE

- Separate three different policy options: (1) Privatization, (2) "Corporatization," (3) Liberalization
- Rebalance pricing in line with cost of service
- Focus on separating different lines of business: Local Exchange, Interexchange, and Other Services
- Assess economic relationship with State: tax policy, dividends, payments for service, etc.
- Separate entrepreneurial and regulatory/policy roles
- Increase orientation toward users
- Allow users leeway to develop specialized networks
- Encourage joint ventures for new services
- Explore options for new infrastructure investment
- Assess new technologies for multiline services

PRIVATIZATION IN THE TELECOM SECTOR: OTHER THRESHOLD ISSUES

- Status and conversion of debt or loans to the telecom entity
- Treatment of other transfer payments to government, e.g., dividends, taxes (corporate, excise, etc.)
- Accounts receivable from other government agencies
- Status of labor agreements and staffing levels
- Representation of government on board (if any) of telecom entity: transfer of responsibilities from Ministry of Communications to other ministries
- Clarifying role of government in approving investment and other business plans
- Review of organizational structure
- Verifying and validating accounting systems and revenue information

PRIVATIZATION IN THE TELECOM SECTOR: SPECIAL ISSUES TO BE CONFRONTED

- Telecom sector traditionally subject to regulation: tariffs, competitive entry, spectrum licensing
- Threshold need to separate regulatory and entrepreneurial roles
- Need to shift operational roles from governmental ministry into corporate entity -- either public or mixed entity
- Sectoral reform may require introduction of competition and possible "divestiture" of certain PTT functions such as local exchange and interexchange services
- Complex new competitive arrangements must be structured and new regulations promulgated
- Despite overall economic viability of sector, pricing must be restructured, i.e., local exchange increased, interexchange decreased
- Need for investment plan to deal with backlog of demand through improved self-financing or other means
- Fundamental issues must be faced prior to, or concurrent with, privatization process
- Key issue: potential conflict between government role in reforming sector and in selling assets

SELLING THE PTT: SOME FINANCING ISSUES

- Amount of securities to be placed privately
- Jurisdictions where securities will be placed and varying disclosure and other regulatory issues
- Terms and conditions of private placements
- Amount of securities to be offered publicly
- Jurisdictions where securities will be offered and varying disclosure and other regulations applicable
- Types of securities to be sold
- Rights of existing shareholders as buyers or sellers

TRANSFERING CONTROL OF TELECOM ENTITY: OPTIONS FOR NEW OWNERSHIP STRUCTURES

- Public offering of shares: questions of feasibility
- Establishing a market in shares: Impact of shares held by users
- Possible linkage of rapid phase-in of price increases and subscriber share ownership: cooperatization
- Employee stock ownership plans: mechanisms and relationship with unions
- Retention of "golden share" by the government: defining control in corporate as opposed to regulatory terms
- Sale of "control block" of shares: linking domestic and foreign investors in a package
- investment by foreign telecom entities: "ITT problem"
- Possible mechanisms of linking operational expertise and passive foreign investors
- Avoiding cross-ownership problems where some divestiture is planned

PARTIAL PRIVATIZATION OPTIONS
PRIVATIZING "OVERLAY" NETWORK

- Financial viability may depend on price reform which is difficult to implement across-the-board
- New pricing and management practices could be implemented for an "overlay" network serving largest users of telecom services
- One option may be to create separate subsidiary for overlay network or other profitable activities and increase private investment sector-by-sector
- New relationship can be established with respect to local exchange and interexchange services
- Competitive ground rules might be more liberal

"BOTTOM UP" PRIVATIZATION: RELIANCE ON LEASING ASSETS

- Create a separate entity for financing infrastructure
- Utilize to attract new Investment on exchange-by-exchange or region-by-region basis
- Entity would obtain financing and plan facilities but could take on other operational roles
- Telecom entity would continue to provide services through facilities leased from new entity
- New entity could take on increase operational roles and eventually could involve into operating entity
- Such financing strategy is not inconsistent with "top down" approach to privatization and could accelerate private sector investment
- Option might facilitate foreign direct investment
- Foreign investment in financing entity might be "taken out" by domestic investors at a time certain based on "downstream" PTT share price

NEW COOPERATIVE OR FRANCHISING ARRANGEMENTS BETWEEN TELECOM OPERATORS AND NEW PROVIDERS

- Allowing new entities to build out "ends" of the network
- Different access configurations: VSAT, small PBX, Telepoint services
- Division of revenues between PTT and new entities
- Specializing tariff options
- Establishing franchise terms
- Different structures for new service providers: cooperatives, individual operators, hybrids
- Options for buy-out: scenarios for privatization
- Developing entrepreneurial capabilities
- Services in rural and urban areas
- Differences between franchising and licensing new carriers

New Techniques for Introducing Private Sector Investment: "Franchising" and Leasing "Privatized" Assets to Operator

Previous Page Blank

NEW COOPERATIVE OR FRANCHISING ARRANGEMENTS BETWEEN TELECOM OPERATORS AND NEW PROVIDERS

- Allowing new entities to build out "ends" of the net .ork
- Different access configurations: VSAT, small PBX, Telepoint services
- Division of revenues between PTT and new entities
- Specializing tariff options
- Establishing franchise terms
- Different structures for new service providers: cooperatives, individual operators, hybrids
- Options for buy-out: scenarios for privatization
- Developing entrepreneurial capabilities
- Services in rural and urban areas
- Differences between franchising and licensing new carriers

NEW FINANCING MECHANISM: LEASING INFRASTRUCTURE FROM NEW FINANCING ENTITIES

- Technique similar to that utilized in France in 70's: Coditel publicly held, owns assets, leases them to operator
- Create financing entity to own assets for local exchange, interexchange, or international services
- Financing entity owned by foreign or private investors including consortia of operators and institutional investors
- Lease payments based in part on operating results
- Financing entities can evolve into operating entities
- "Bottom up" privatization or "mirror" privatization
- Transition to privatization through sale of shares of telecom operator

BENEFITS OF NEW FINANCING TECHNIQUES AS TRANSITIONAL MEASURES

- Develop technical and institutional infrastructure
- Create small scale, attractive investment options
- Generate track record in capital markets
- New services and new sources of cash flow make PTT more attractive in potential investors
- Franchising new operators and creating new financing entities facilitate overall plan for institutional reform and eventual privatization