PN-ABM 396
79415

Progress Report No.3

MONITORING AND CONTROLLING THE SALT GRADIENT IN THE SOLAR PONDS

A Research Project
Grant No. 936-5544-G-00-8041-00

Submitted by
Surachai Limyingcharoen
Jumlong Limtragool
Supatra Anutrakulchai
Withaya Thonket

Faculty of Engineering
Khon Kaen University
Khon Kaen 40002
Thailand

BEST AVAILABLE DOCUMENT

MONITORING AND CONTROLLING THE SALT GRADIENT IN THE SOLAR PONDS

profect profile

Country	Thailand
Grant No.	936-5544-G-00-8041-00
Program	U.S.-Israel CDR Program
Project Title	Monitoring and Controlling the Salt Gradient in the Solar Ponds
Project Leader	Surachai Limyingcharoen
Organization	Faculty of Engineering, Khon Kaen University, Khon Kaen 40002, Thailand
Co-Investigators	Jumlong Limtragool Supattra Anutrakulchai Withaya Thonket
Israeli Collaborators	Yehuda Taitel Arkady Tsinober
Authorized Officer	Anukul Jintarax, Vice - President for Research Affairs, Khon Kaen University
Total Project Budjet	US $200,000
Project Duration	June 1988 to December 1992
Reporting Period	June 1989 to November 1989

BEST AVAILABLE DOCUMENT

Contents

		Page
1.	Background	1
2.	Objectives:	1
3.	Materials and Methods:	2
4.	Results/Discussion:	5
5.	Collaboration with Israeli Investigators	14
6.	Workplan for the Next Period:	15
7.	Annex 1 solar Radiation Meter	17
8.	Annex2: Report from Israeli Collaborators	25

BEST AVAILABLE DOCUMENT

1. Background

Salt gradient solar ponds is an alternative approach to harness solar energy in the region where salt, water, and sunshine are plentiful.

The physical and chemical processes in the solar pond interact with the environment where the solar pond is located. There is a need to identify the dominant external effects and the extent of these effects on the performance of the solar pond in order that appropriate operational control action can be developed.

Salt gradient solar pond technology is relatively new. The conditions in the pond are extreme for commercially available instruments which are used to monitor its operating conditions. This results in an additional requirement to develop appropriate measuring instruments which are low cost and robust enough to withstand such conditions.

This project began its activities in June 1988. The construction of two salt gradient solar ponds with a surface area of 50 squaremeters each has been planned. Necessary solar pond accessory equipment has been designed and built.

2. Objectives

2.1 Overall objective and specific objectives

This research study is an attempt to study the effects of external disturbances, expecially the tropical meteorological conditions, on the top interfacial boundary of the salt gradiet solar pond. Results of the research should help answer the question "To what extent do the tropical weather conditions affect the upper interfacial boundary of the salt gradient zone of the solar pond?".

The overall aim of the project is to develop a simple procedure for solar pond operation for less developed countries in the tropical area. This will give

BEST AVAILABLE DOCUMENT

LDC's with an additional energy alternative with great potential for future development.

Specific objectives are the followings:

i) To develop electronic hydrometer for monitoring solar ponds conditions.

ii) To identify major factors affecting the top interfacing boundary of the salt gradient in solar ponds.

iii) To develop appropriate procedure for solar pond operation in such a way that the effects of external disturbances on the salt gradient are minimised.

2.2 Objectives for this period (June 1989 - November 1989)

2.1 Solar pond construction.

2.2 Continuation on the design and construction of solar pond accessory equipment and installation of measuring instruments.

2.3 Solar pond filling and salt gradient establishment.

2.4 Continuation on the design and construction of electronic hydrometer.

3. Materials and Melthods

3.1 Solar Pond Construction.

Invitations for construction cost quotations were sent to 6 potential building contractors. Only one contractor turned up to verbally quote the contruction cost. The quoted price was 780,000 bahts excluding pond insulation and lining which was considered too high. The quotation was not accepted.

Four more building contractors were approached. The lowest cost of 740,000 bahts was obtained from Khon Kaen P. Panich Ltd. Part. The construction began in June 1989 and was due to finish in October 1989. However, The solar Ponds were found to leak and the building contractor was called to repair up the leaks.

BEST AVAILABLE DOCUMENT

3.2 Continuation on the design and construction of the accessory equipment and installation of measuring instruments.

Solar radiation measuring instrument was built by a fourth year electrical engineering student as a senior project. A small photovoltaic panel was use as a solar radiation sensor. The photovoltaic sensor gives out a short circuit current as a function of incident radiation. The current was then converted to voltage by a shunt resistor. This voltage was then amplified to an appropriate voltage range to enable interfacing with a data logging device. Temperature conpensation circuit was also employed to keep the error of the measurement due to change in operating temperature to a minimum. A prototype had been completed and tested. An improved version which will employ better electronic components was planned.

The construction of salinity probes was carried out by another group of two fourth year students. This was also set up as another senior project. A method similar to the one used in measuring soil resistivity was used. A constant current source was built to inject a current through a pair of electrodes. Another pair of electrodes were placed between the current electrodes. The potential difference of the latter pair of electrodes. was measured to obtain the conductivity of the salt brine. The conductivity of the brine was used to indicate the salinity of the brine. This piece of instrument had not been completed yet.

Thermocouple wires were purchased and were installed during the solar pond construction for measuring the temperatures underneaths the solar ponds' bottom. This installation was made to enable the detection of heat loss due to underground water flow.

3.3 Solar pond filling and salt gradient establishment.

The work on solar pond filling and salt gradient establishment was not possible due to the leakage of the solar pond lining material.

BEST AVAILABLE DOCUMENT

3.4 Continuation on the design and construction of electronic hydrometer.

Pressure transducers model MPX 2010 DP, MPX 2050 DP and MPX 10 DP were examined. The transducers were connected to an amplifier to increase their sensitivity (see figure 1). Experiments were carried out to determine potential problems.

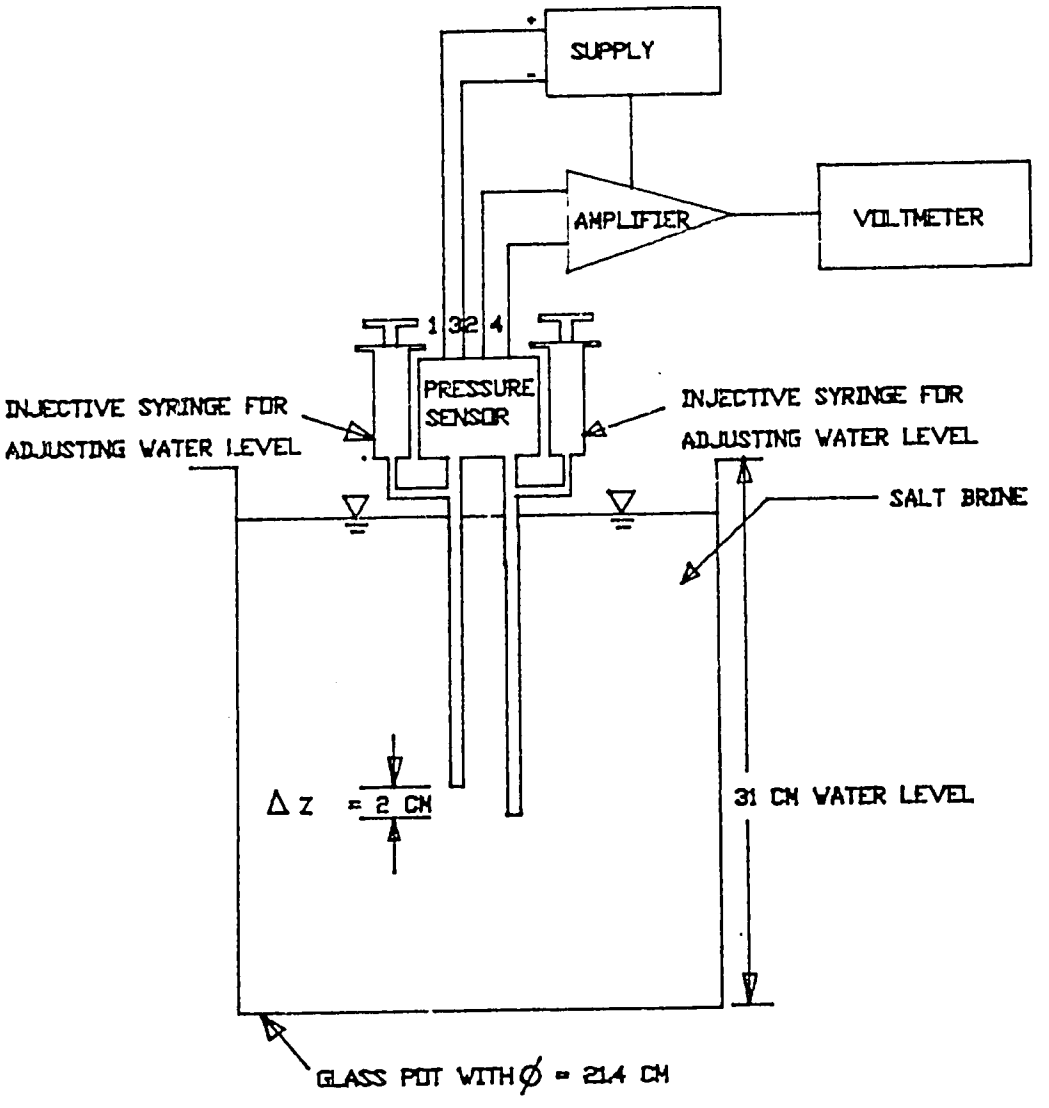

Figure 1. Field trial of pressure sensors

BEST AVAILABLE DOCUMENT

4 Result /Discussion

4.1 Solar Pond Construction

Photographs of various phases of construction are shown as follows

Photo 1. Earth was partially removed for placing the foundation of the solar ponds' side walls

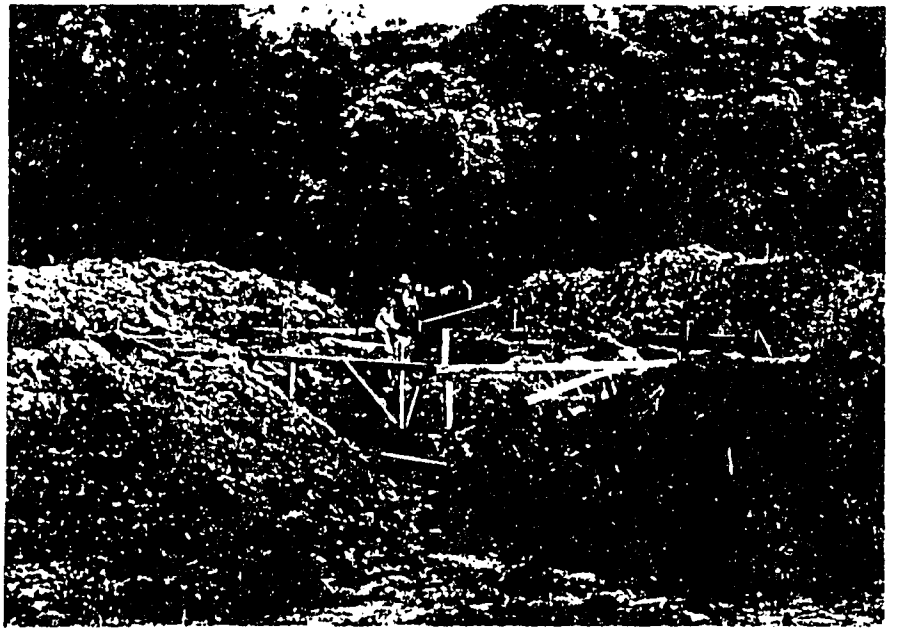

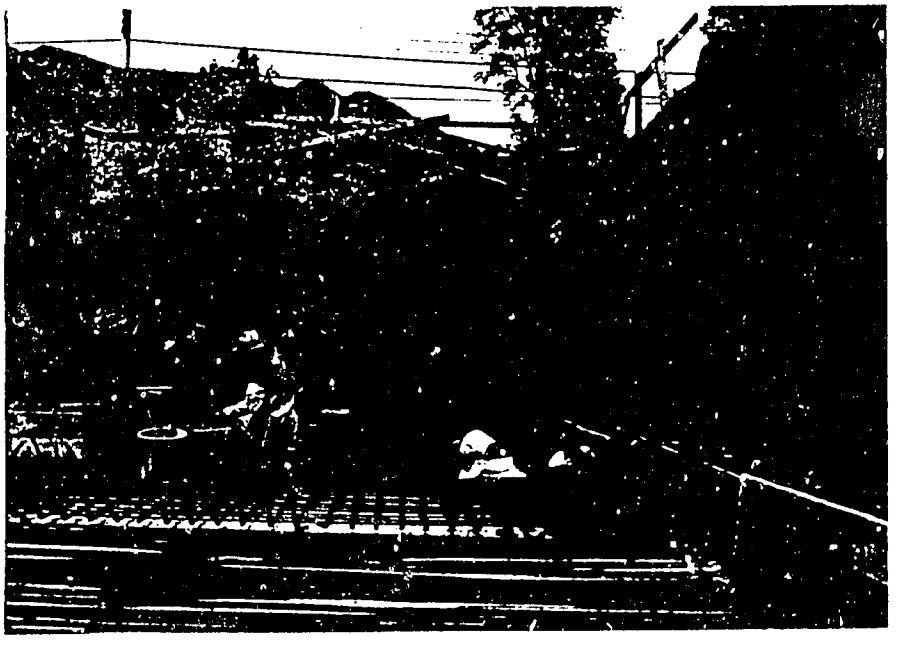

Photo 2. Steel reinforcement for side walls foundation was installed

BEST AVAILABLE DOCUMENT

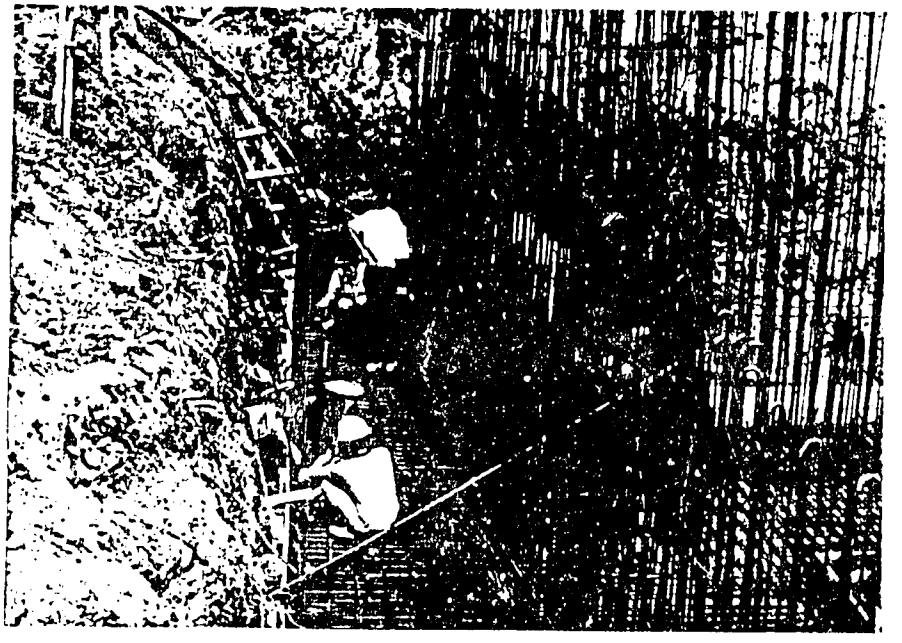

Photo 3. Steel reinforcement for the side walls of the solar ponds was formed.

Photo 4. Construction forms for the side walls were erected.

BEST AVAILABLE DOCUMENT

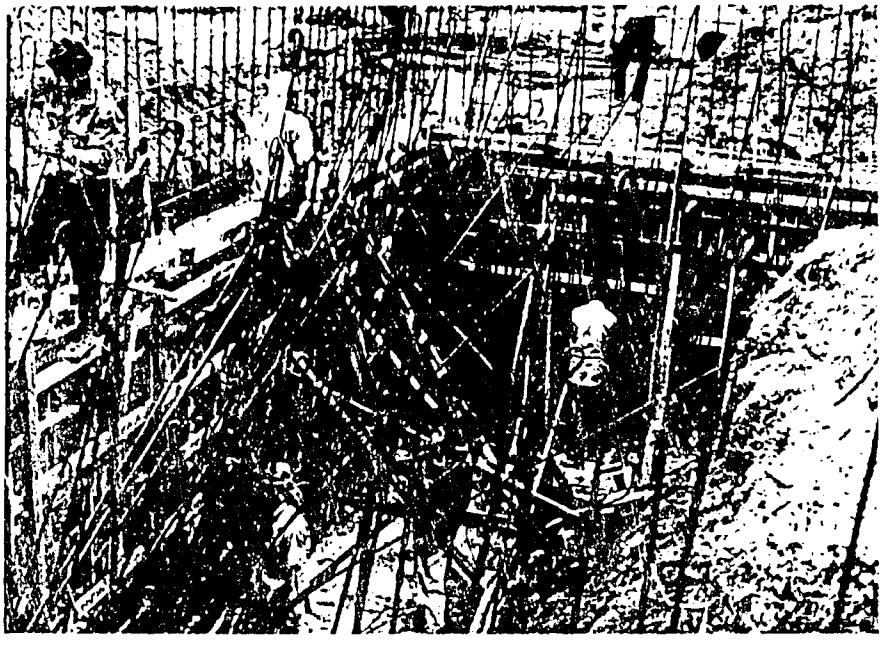

Photo 5. Concrete casting.

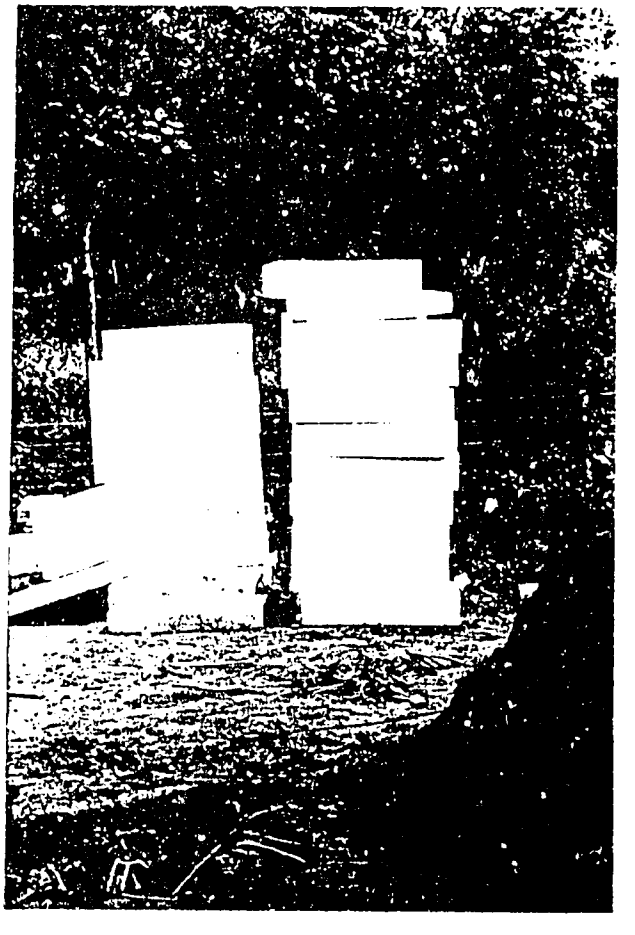

Photo 6. Polystyrene foams for side wall thermal insulation.

BEST AVAILABLE DOCUMENT

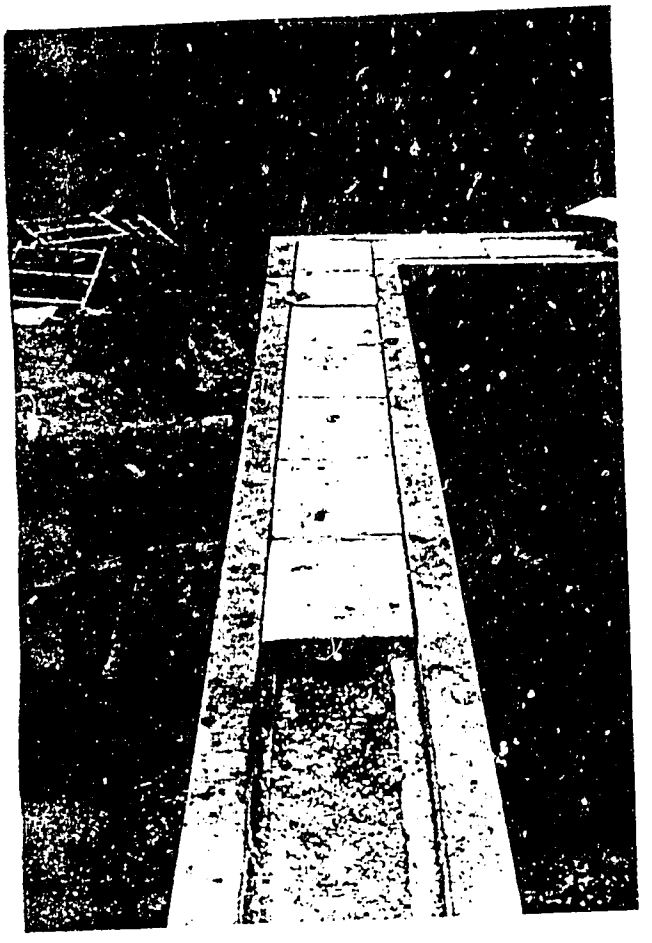

Photo 7. Sidewall with insulation installed.

Photo 8. Drainage system underneath the ponds' bottom.

BEST AVAILABLE DOCUMENT

Photo 9. Installation of thermocouples.

Photo 10. Preparation of lining material.

Photoh 11. Installation of liner.

BEST AVAILABLE DOCUMENT

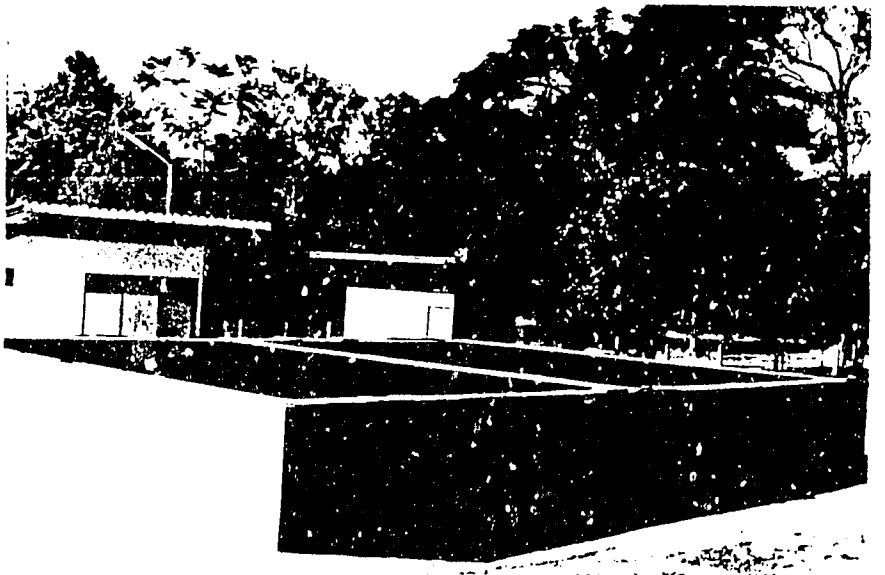

Photo 12. Solar ponds with liner installed.

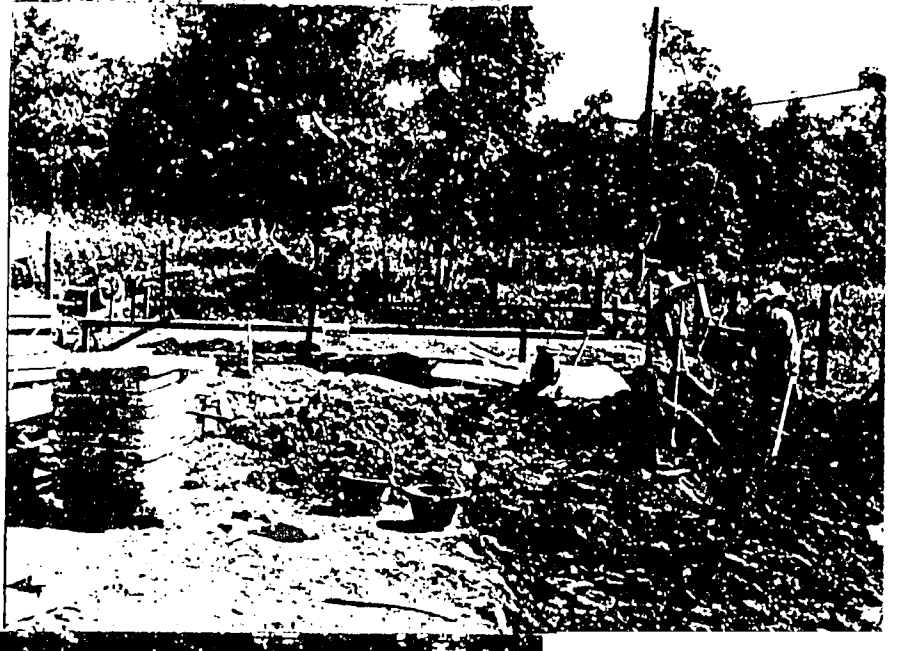

Photo 13. Earth preparation for evaporating pan.

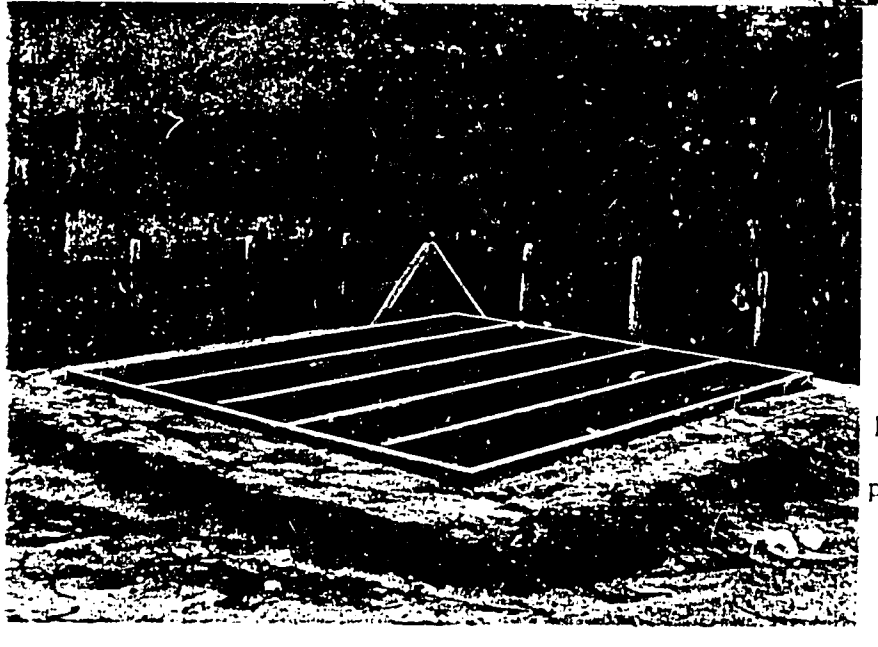

Photo 14. Evaporating pan structure.

BEST AVAILABLE DOCUMENT

Photo 15. Evaporating pan with liner installed.

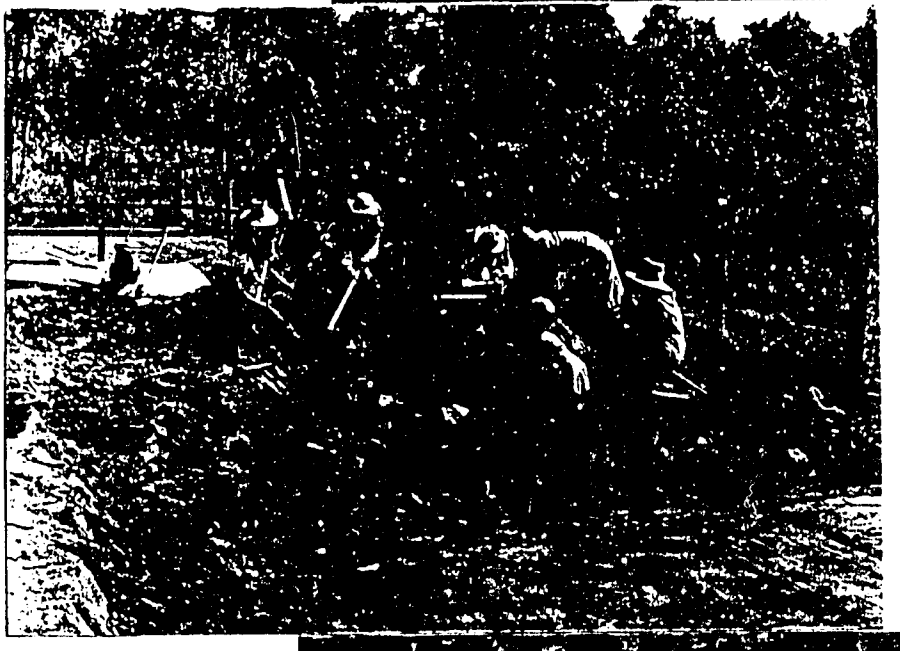

Photo 16. Earth preparation for brine mixing and storage pond.

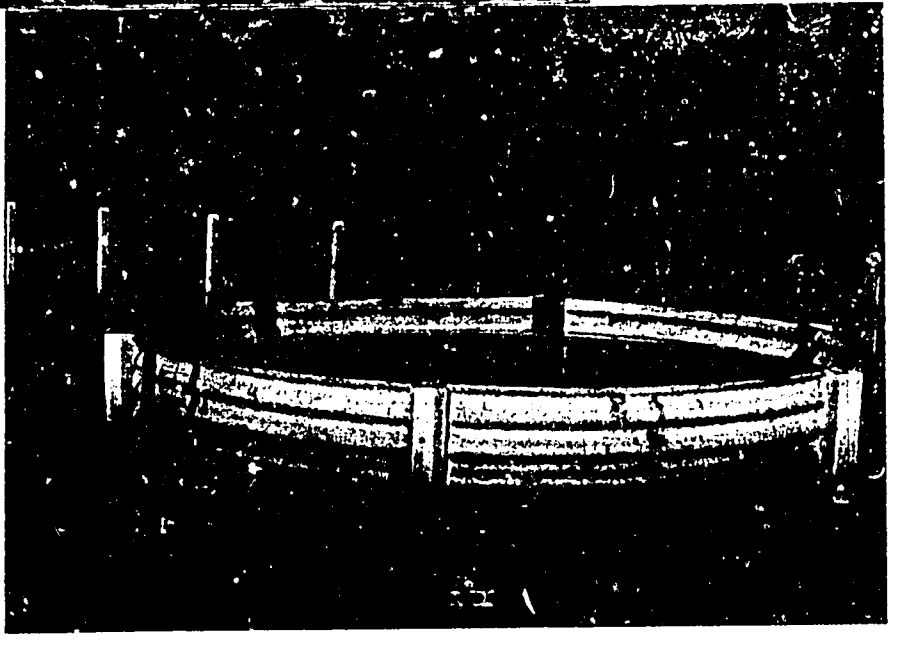

Photo 17. Brine mixing and storage pond.

BEST AVAILABLE COPY

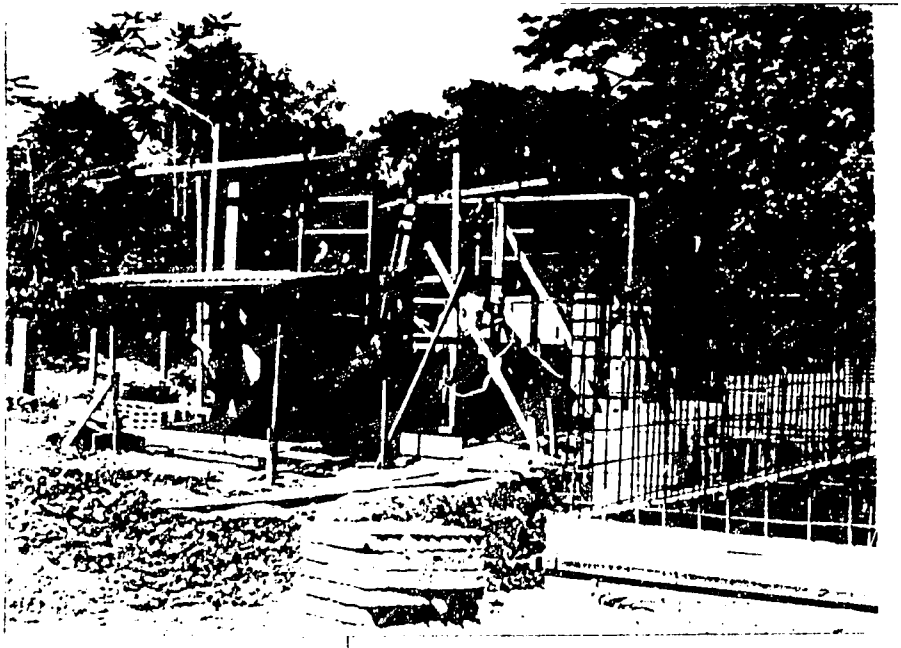

Photo 18.Erection of instrument hut.

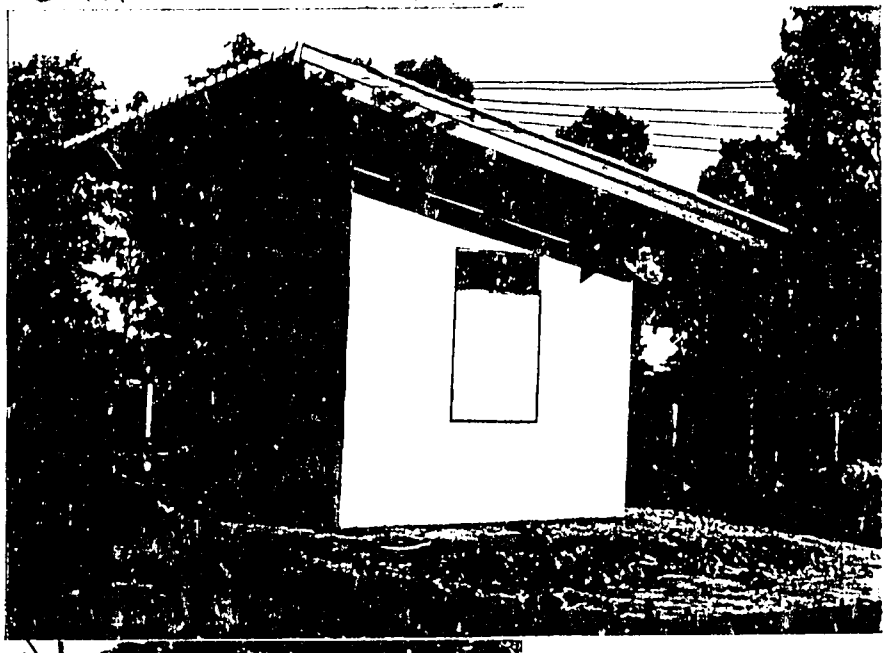

Photo 19.Instrument hut.

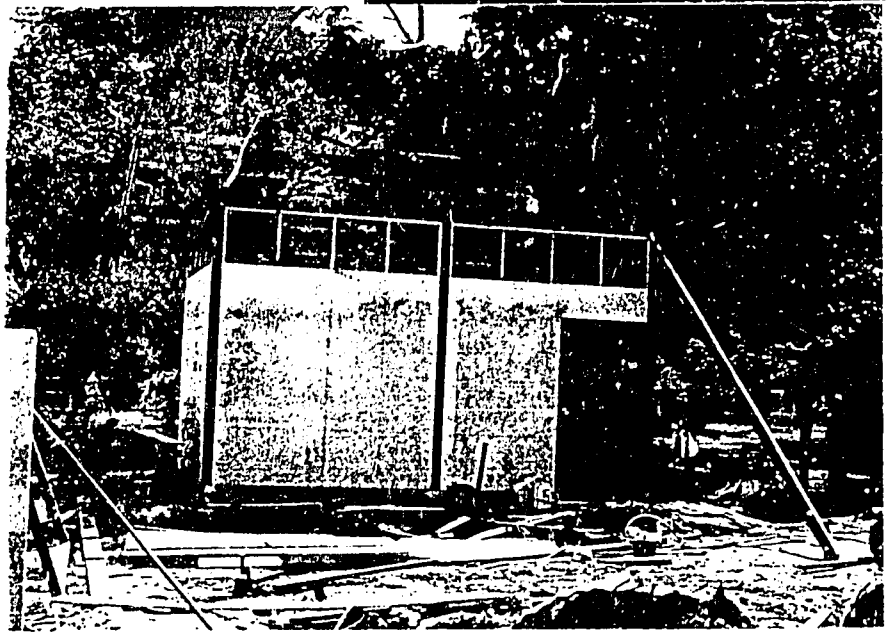

Photo 20. Constructi of salt storage.

BEST AVAILABLE COPY

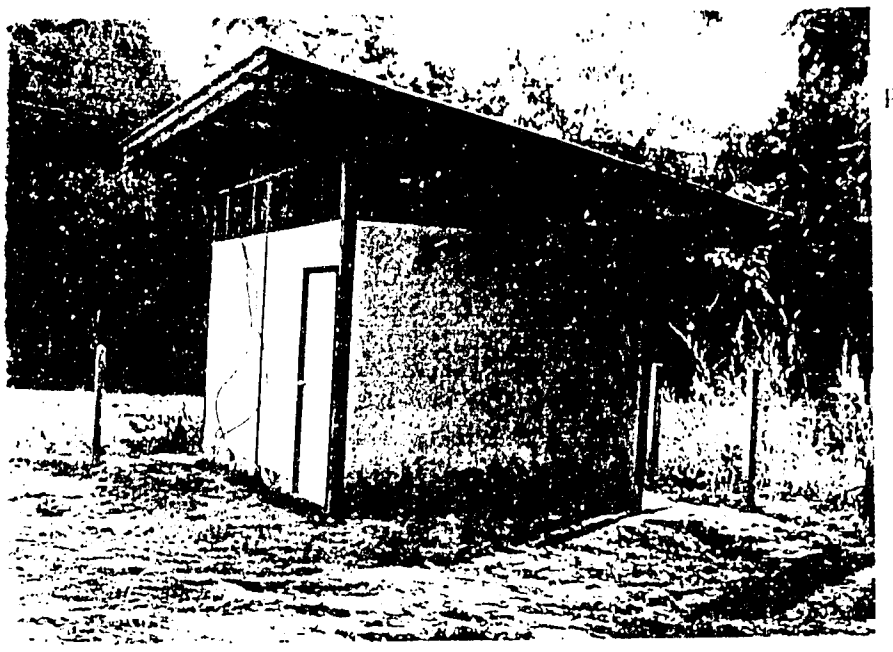

Photo 21. Salt storage.

4.2 Continuation on the design and construction of solar pond accessory equipment and installation of measuring instrument.

a) Solar radiation measuring instrument

A prototype solar radiation meter was obtained with a measuring range of 0-1000 watts/square meter, with an accuracy of ±6 watts/square meter with in an operating temperature range of 25-75 degrees Celcius. The sensitivity of the radiation meter output was 10 millivolts per 1 watt/square meter of incident radiation. Detailed explaination of the radiation meter is attached as Annex 1.

b) Salinity probe

Trial experiments on aluminum, copper and chromium plated electrodes were caried out. Corrosion occured on all the specimens resulting in unsatifactory results.

BEST AVAILABLE COPY

4.3 Solar pond filling and salt gradient estabilishment.

Due to leaking problem, solar pond filling and salt gradient establishment was possible.

4.4 Continuation on the design and construction of electronic hydrometer

It was discovered that the output range of the selected transducer was not appropriate for use as a sensor for measuring brine density.

Additional problems were also identified as follows

1. Submersion of the sensor in the salt brine was not possible. Direct contact of the sensors with the salt brine resulted in damage to the sensors.

2. Surface tension and capillary effect caused uncertainty in the water levels at the measuring ports of the pressure sensor (See figure 2). Glass funnels were attached to the measuring ports to reduce this effect. (See figure 3)

5. Collaboration with Israeli Investigators.

It was agreed between the Israeli and Thai investigators that the collaboration work will be on "the development of a scanning probe to obtain the temperature and density profiles in the KKU solar ponds in situ".

A literature survey on density measurement technologies was carried out at the Tel Aviv University. A density measuring instrument based on Archimedes principle was developed. The progress report received from Israeli collaborators is included as Annex 2.

BEST AVAILABLE COPY

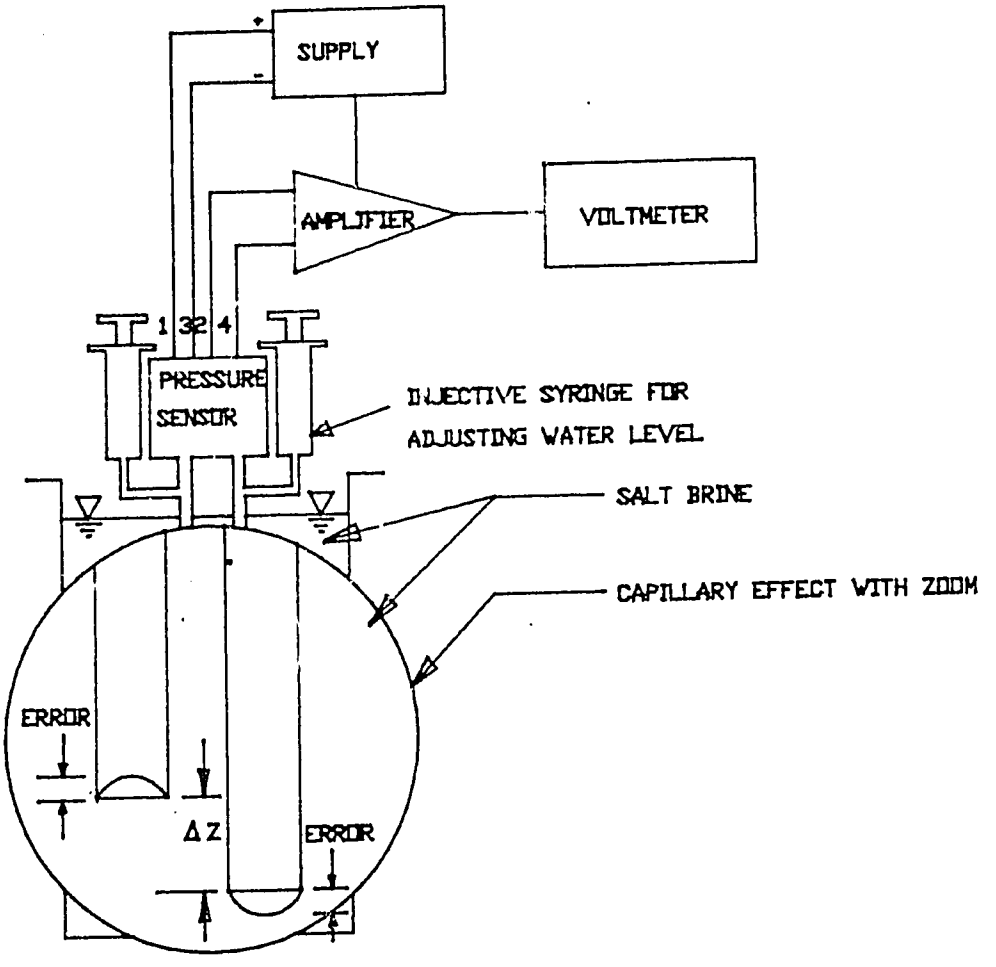

Figure 2. Capillary effect on measuring ports

6. Work plan for the Next Period (December 1989-May 1990)

6.1 Solar pond filling and salt gradient establishment.

6.2 Continuation on the development of electronic hydrometer.

6.3 Continuation on the construction and installation of solar pond accessory equipment.

6.4 Solar pond Commissioning : Collection and measurement of relevant data.

BEST AVAILABLE COPY

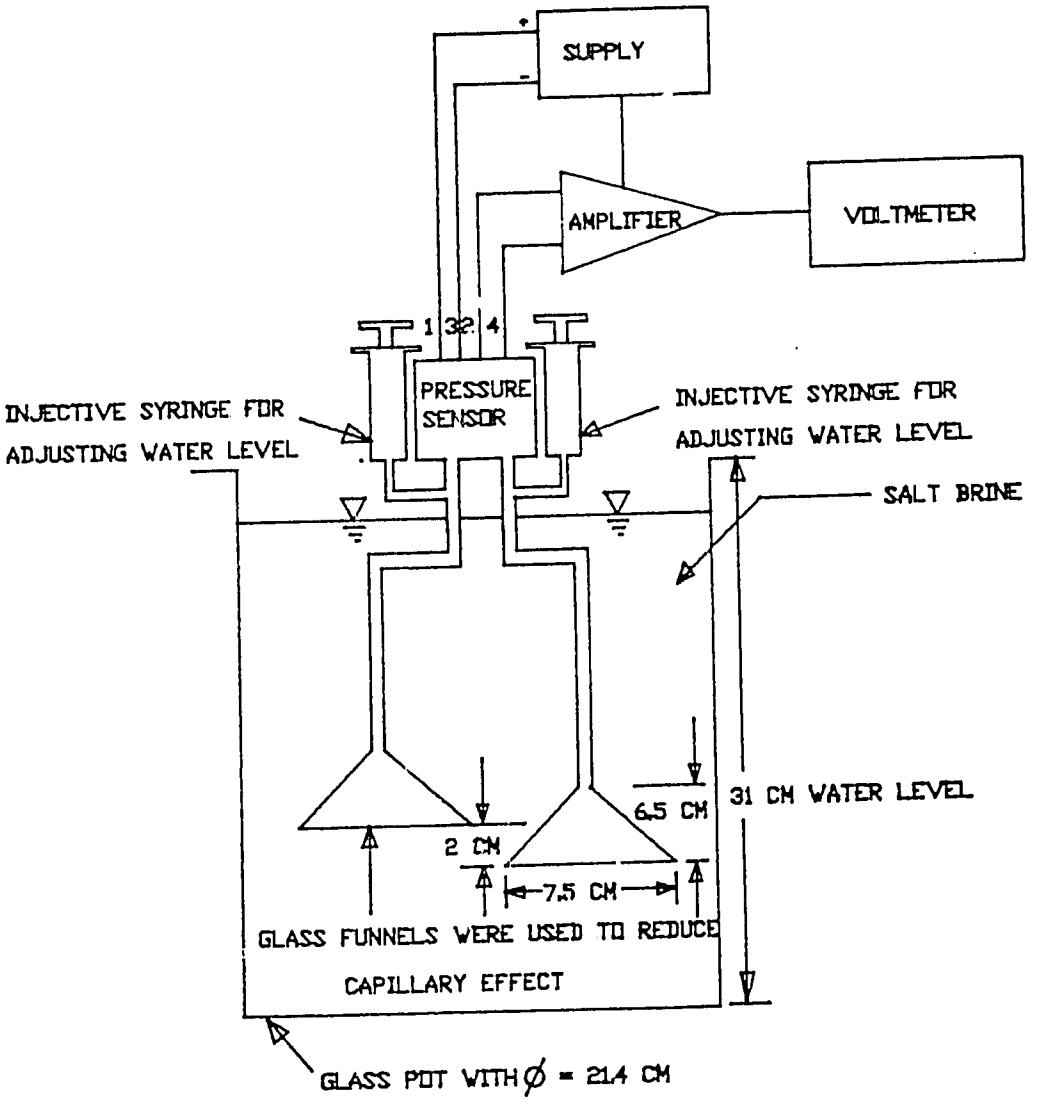

Figure 3. Glass funnels were used to reduce capillary effect

BEST AVAILABLE COPY

Annex 1.

Solar Radiation Meter

1. Objective

A meter for measuring the intensity of the solar radiation is required for the solar pond project at Khon Kaen University.

2. Design Considerations

The following features have been maintained throughout the design and construction phases.

1. Measuring range 0-1500 watts/m^2.
2. An accuracy of $\pm$ 5%.
3. D C voltage output (0-15 v) for direct connection to a data logger.
4. Minimum drift due to change in operating temperature.
5. Use of locally available components.

3. Principles of Operation

The solar radiation meter can be decomposed into functional blocks as in Figure 1.

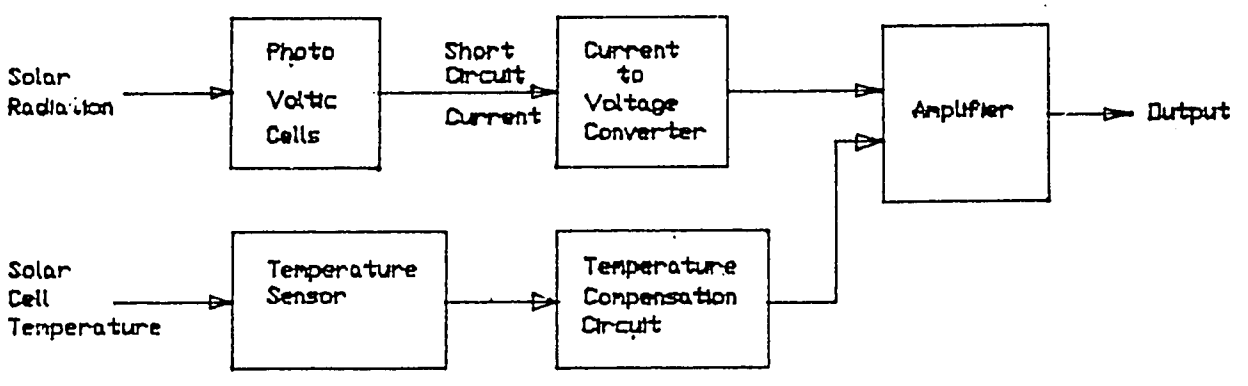

Figure 1 Block diagran of Solar Radiation meter

BEST AVAILABLE COPY

The solar radiation is converted to an electrical signal using a small photovoltaic panel. The short circuit current of the photovoltaic panel is proportional to the incident radiation. This short circuit current is then converted to a voltage signal using a shunt resistor. The resulting voltage is then amiplified to give a voltage level which is compatible with the available data logger.

The short circuit current of the photovoltaic panel, however, changes with the solar cells' temperature. A compensation circuit is then required. This is accomplished by measuring the temperature of the photovoltaic panel using a temperature sensitive integrated circuit. The output of the temperature sensitive IC is then modified to an appropriate voltage level and correct temperature sensitivity. This is done in the block call temperature compensating circuit. This corrective voltage is then added to the output voltage of the current to voltage converter. The resulting voltage is then amplified to a voltage level which can be directly connected to the available data logger.

3. Construction and Testing

3.1 Sensitivity measurement

A small solar panel (see Figure 2) was connected to a 0.05 ohm resistor as in Figure 3.

BEST AVAILABLE COPY

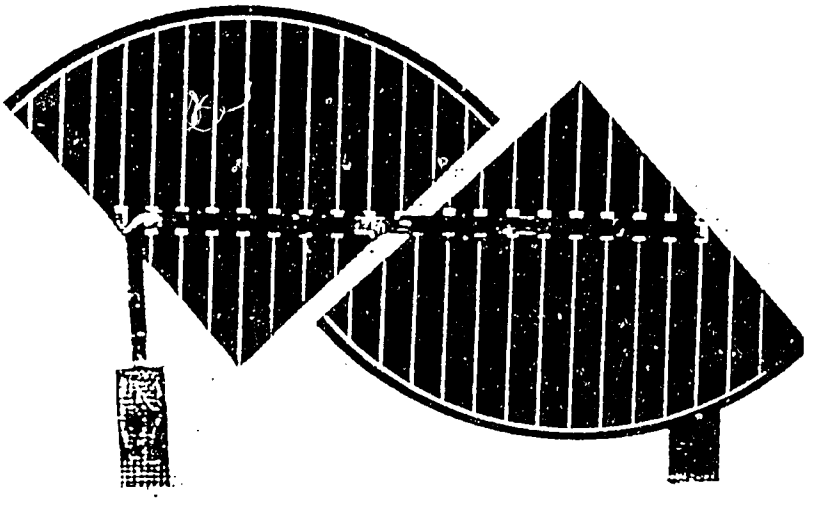

Figure 2. Photovoltaic panel as a radiation sensor.

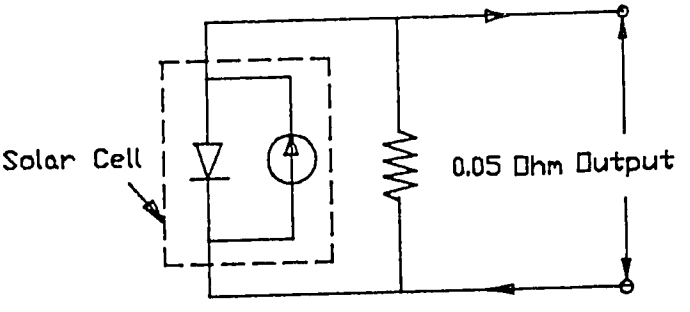

Figure 3 Test Circuit

The solar panel was then placed is an illuminated box whose light intensity and temperature can be accurately controlled. The light intensity was then varied and the voltage across the resistor was measured to give the result in Figure 4.

BEST AVAILABLE COPY

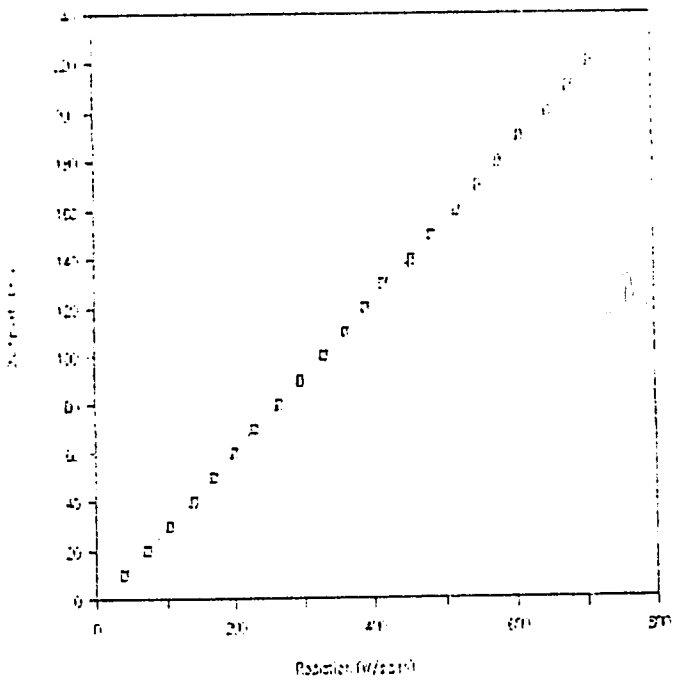

Figure 4. Sensitivity of photovoltaic panel

3.2 Temperature Effect Measurement

An IC amplifier employing CA741 CE was used to amplify the output of the current to voltage converter. The circuit of the sensor and anplifier is shown in Figure 5.

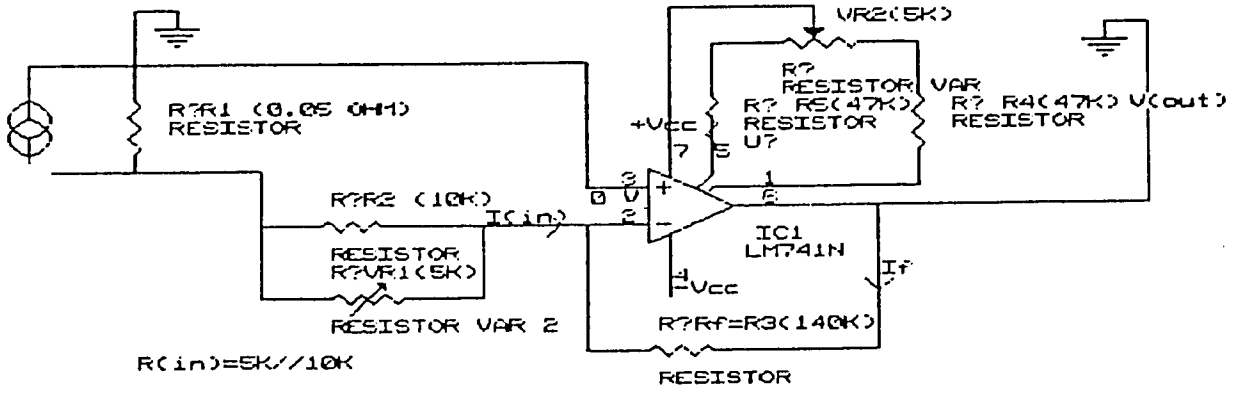

Figure 5. PV panel, I/V Converter and Amplifier

BEST AVAILABLE COPY

This part of the circuit was then tested by maintaining the operating temperature at various possible temperatures (25-75 degree celcius). The radiation intensity was then varied. The result is given in Figure 6.

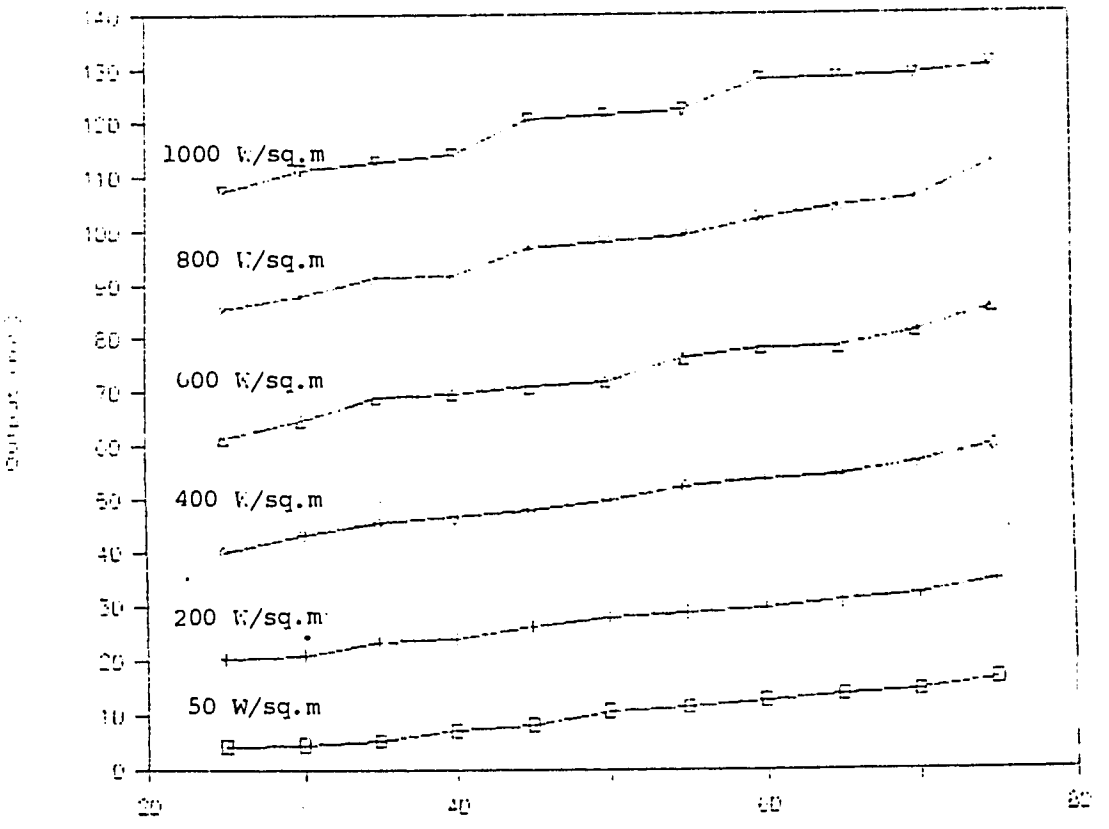

Fingure 6. Temperature Sensitivity Test

A linear curve fitling using least square error method was carried out to obtain a temperature sensitivity of the circuit as 27.27 mV/degree Celcius.

BEST AVAILABLE COPY

3.3 Design and Construction of Temperature Compensation Circuit.

An integrated circuit temperature sensor (LM 335) was mounted on the photovoltaic panel for measuring the temperature. Another IC amplifier employing LM 741 N was designed to give a temperature sensitivity of 27.27 mV/degree Celcius. The resulting compensating circuit is shown in Figure 7.

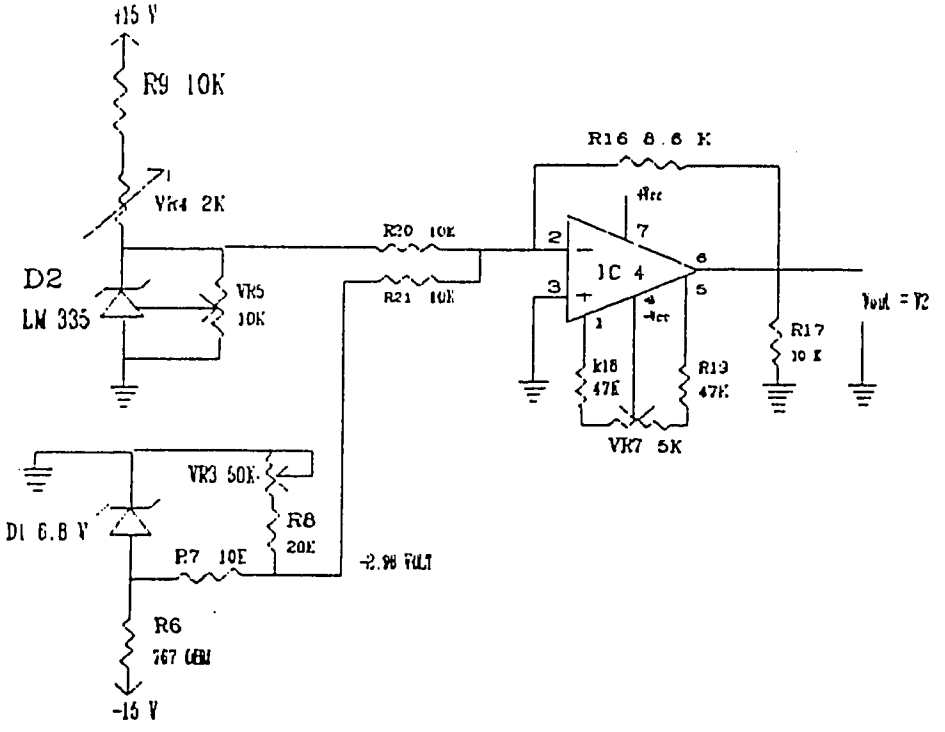

Figure 7. Temperature Compensating Circuit

3.4 Final testing

The sensor, the amplifier, the compensating circuit and a regulated DC power supply were combined to yield the circuit shown in Figure 8.

BEST AVAILABLE COPY

C1 = CA741CE

C2 = AN7851

C3 = MC7915CT

C4 = LM741N

C5 = LM741N

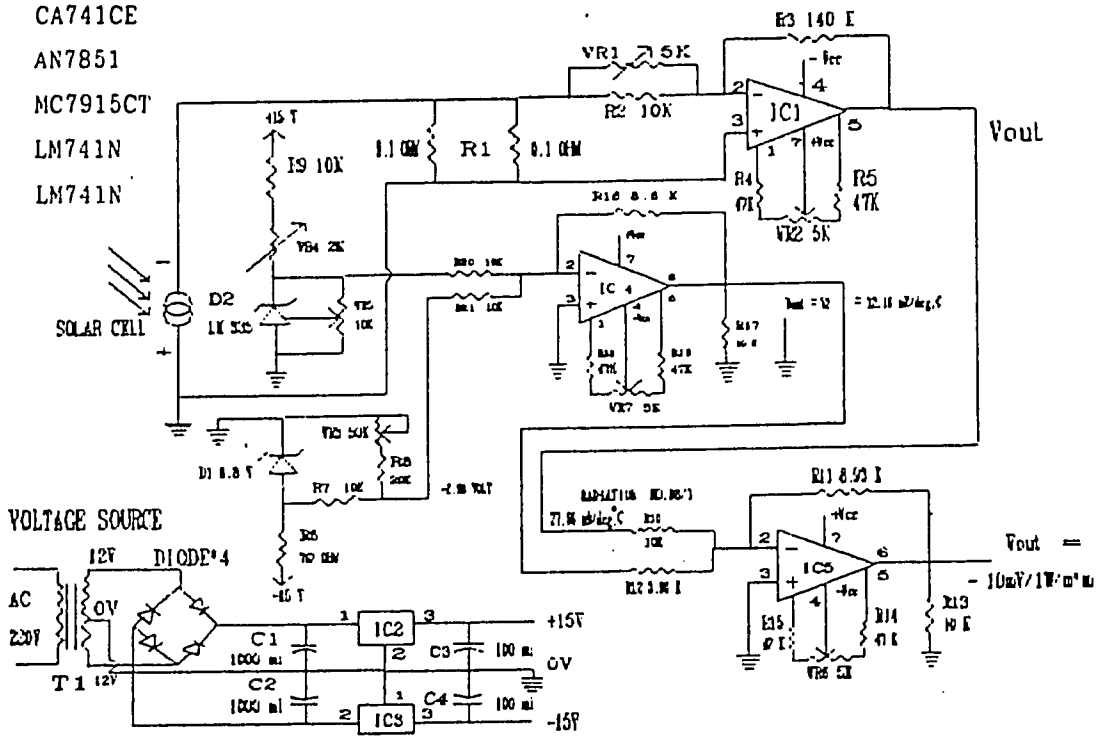

Figure 8. Circuit Diagram of Solar Radiation Meter

The radiation meter was then tested and adjusted to yield the output characteristics as in Figure 9.

BEST AVAILABLE COPY

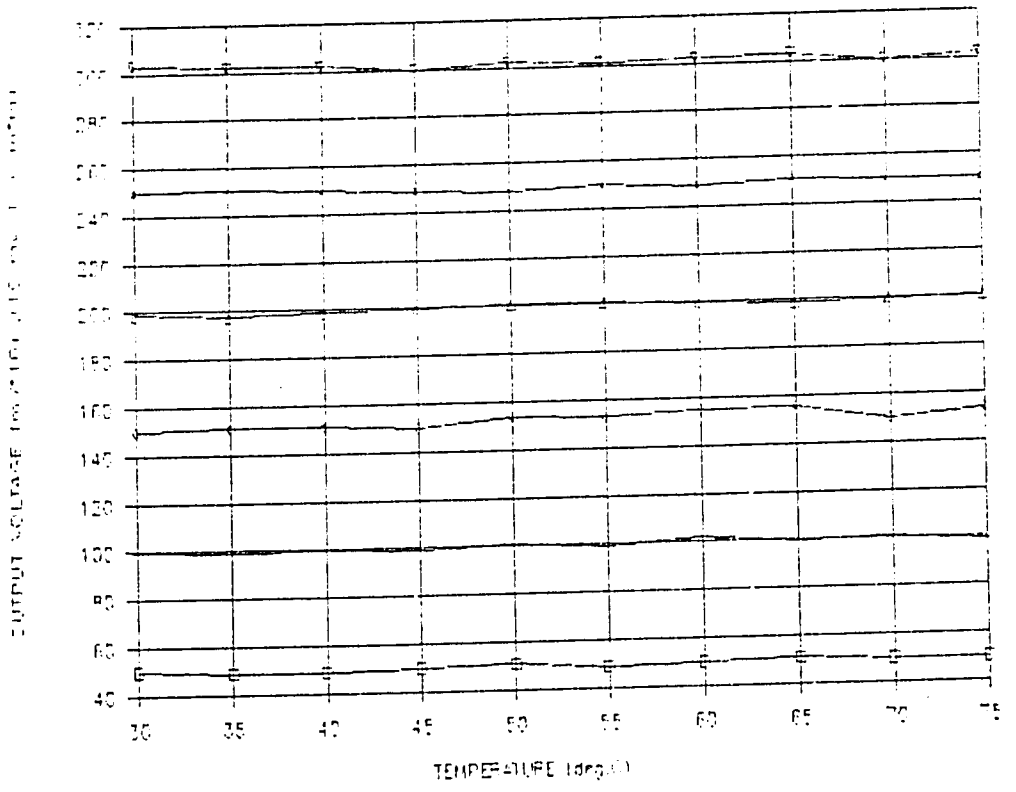

Figure 9. Output of Compensated Circuit

4. Conclusions and Recommendations

The solar radiation meter obtained gives a linear output of 0-10 Volts according to a radiation range of 0-1000 Wats per square meter. It was expected that the output could be extended to 15 Volts which is corresponding to a radiation of 1500 Watts/square meter with a minimum loss of accuracy although test data had not been possible due to the lack of suitable instrument. The accuracy of the meter was ± 6 W/square meter.

It was recommended that a digital display unit should be incorporated to the meter to enable direct read out by an operator. A better operational

BEST AVAILABLE COPY

Annex 2

Report from Israeli Collaborators

Progress Report (for the period March 1 to November 30, 1989)..

The collaborative work on the topic "The development of a scanning probe to obtain the temperature and density profiles for the KKU - solar ponds in situ" is based on a Ph.D research work undertaken at the Tel Aviv University.

The first stage in the course of this work was literature survey on density measurements technologies.
Following the literature survey a density measurement apparatus based on Archimedes principle were developed.

The density of the fluid will be determined by measuring the buoyant force of a glass (Quartz) rod submerged horizontally in the salt solution, using "LVDT Force Transducer" which is accurate to 0.001 grams with uncertanty of 0.25%

The local density of the salt solution is proportional to the apparent mass of the glass rod according to the expresion as follows:

$$\rho(z) = \frac{m(z) - m_0}{V_0}$$

where:

m_0 - mass of glass rod.

$m(z)$ - Apparent mass of submerged glass rod.

V_0 - Volume of the glass rod.

This apparatus comprised of a Force Transducer and an electronic circuit designed by us. The output signal from the "LVDT Force Transducer" is planned to be recorded by a personal computer through an A/D board.

A schematic description of the density probe is given in Figure 1.

BEST AVAILABLE COPY

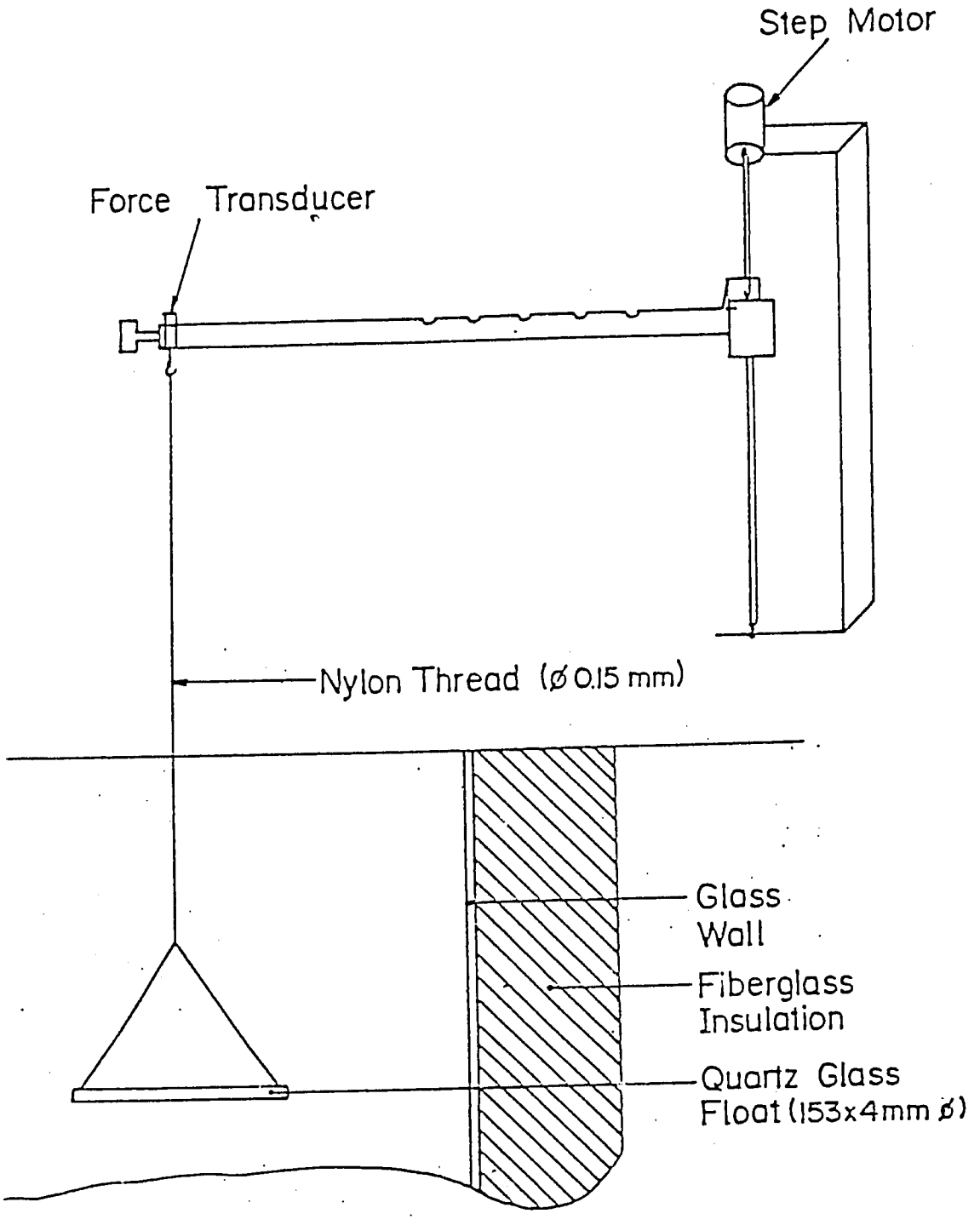

Fig. 1 : Density Measurement Apparatus (Archimedes method).

BEST AVAILABLE COPY