PN-ABM-395

C8-200

PROGRESS REPORT NO. 1

# Saturated Salt Gradient Solar Pond

A Research Project
Grant No. 935-5544-G-00-8041-00

Zahal Harel
Arkady Tsinober and
Yehuda Taitel

Faculty of Engineering
Department of Fluid Mechanics & Heat Transfer
Tel Aviv University
ISRAEL

Rec'd in SCI JUN 23 1989

BEST AVAILABLE DOCUMENT

Progress report No. 1 for the period from September 1988 to May 1989 and work plan for the rest of 1989

## Solar Pond Research and Development At the Tel Aviv University.

### 1. Background

Solar pond as large scale low cost solar thermal energy collectors were initiated in Israel in the nineteen sixties. Since then a substantial amount of work in this field was undertaken in numerous countries, in particular in the United States. Nevertheless, Israel has kept its leading position in solar ponds R & D. The climax of the work in Israel was reached in the early 1980's with the construction of large scale ponds, of an area of sixty acres combined with a megawatt scale power plant.

Research work on solar ponds started in the University of Tel Aviv in the nineteen seventies with studies on land based salt gradient ponds and "floating ponds" on the surface of the dead sea in Israel.

At present our activity in the field is concentrated on a novel non convective pond based on saturated brines with strong solubility dependent on temperature.

The high concentration of the solute at the low levels of a concentrated salt gradient solar pond decreases continuously towards the higher cooler level. This is achieved by using a salt with solubility substantially increasing with temperature.

One of the interesting characteristic of a stratified systems close to saturation condition is the ability of self generation and self maintanence of the stable gradients.

The first objective of our research work was to select the salt solution to be used and to present the experimental work on the feasability of using a high concentrated solar pond system as a thermal collector and a means for thermal storage.

Under this work, a number of potential solute were identified which could be used in a solar pond. These include borax, potassium nitrate, magnesium and calcium chloride, and potassium alum.

BEST AVAILABLE DOCUMENT

An appropriate salt for the high concentrated (saturated) solar pond must have five qualities. Three of these qualities, which refer to the physical properties of its saturated solutions over the desired temperature range, are:

1. The density of the saturated solution must increase adequately with an increase in temperature (see figure 1).

2. The average solubility must not be too high.

3. The salt must be chemically stable, nontoxic and transparent in solution.

The other two qualities desired of the salt refer to its cost and availability.

4. The salt should be inexpensive preferably about the same price as sodium chloride

5. A large quantity of salt will be needed. Thus the salt must be available in large quantities.

The second objective of this research work is to determine the mechanism which govern on these phenomena of self generation and self maintanence saturated solar pond.

In the first stage of our research work we chose the Magnesium chloride salt solution owing to the large quantity of this salt available in Israel.

An outdoor pond, of 4 x 4 x 0.9 $m^3$ size was built at the University. Feasibility of stable concentration and temperature gradients under saturation conditions was studied, along with unique phenomena of high penetration of solar insolation to the bottom of the pond, in high concentration salt solutions. Summary of our research work on this pond was presented in the 5th PCH conference in 1985, Tsinober et al (1985), and is attached in App. A.

Favorable results with respect of thermal efficiency of saturated solar ponds as solar energy collectors gave incentive to our next research effort.

This phase of the work (1989) is carried out inside laboratory conditions under completely controlled and monitored conditions, for the purpose of gaining a deeper understanding of various specific phenomena and processes, taking place in high concentration close to saturation salt gradient solar ponds. The salt solution to be used in this experiment is potassium nitrate. This salt was chosen owing to the existing of extensive thermodynamic data.

BEST AVAILABLE DOCUMENT

In the course of this work, some novel technologies and instrumental means were developed, which may be applied also in solar ponds research work in the University of Khon Kaen in Thailand. For example, an apparatus was developed built and applied for measuring inside the pond, the density of salt solutions, as affected by salt concentration and temperature.

Theoretical work on physico-chemical phenomena in double diffusive convection in stratified systems close to saturation concentration was also undertaken throughout our activity. Summary of our laboratory scale research work will be presented in the 7th PCH conference to be held at the MIT in the end of June 1989, and is breafly described in App. B.

In the current year (1989), our research work is aimed on experimental work on a laboratory scale high concentrated solar pond. The objective of this experimental work is to measure the characteristics time of the built up of the stable temperature and density gradients in equilibrium conditions, from various initial conditions.

2. Budjet for the work undertaken at the Tel Aviv University, which may be integrated in the Khon Kaen University Research project.

For the period from September 1988 to May 1989

| | U.S $ |
|---|---|
| Adjustment and operation of the outdoor pond | 1500 |
| Construction of the Laboratory pond | 1500 |
| Heating system | 1000 |
| Salt (Potasium Nitrate) | 1000 |
| Salt ($MgCl_2$) | 800 |
| Density measurement apparatus | 1500 |
| Total | 7300 |

Budjet for the current year from June to December 1989

| | U.S.$ |
|---|---|
| IBM-PC included analog to degital card and expansion to measure thermocouples 32 units | 2100 |
| Travel expense for Israeli collaborators to Thailand | 3200 |
| Total | 5300 |

BEST AVAILABLE DOCUMENT

3. Comments on Outdoor Solar Pond Work Related to the Khon Kaen University Project.

Before visiting the Project in Khan Kaen, only some general comments may be made:

(a) Selection of lining materials for pond should be made with particular consideration of the effect of temperature on the material. In our outdoor solar pond we have used polybutilene lining material which can be operated up to 140 °C.

(b) Groundwater flow underneath the bottom of the pond may bring about high losses of thermal energy. Hence a study of groundwater regime at the site is recommended.

BEST AVAILABLE DOCUMENT

Appendix A

BEST AVAILABLE DOCUMENT

GeoChemical Hydrodynamics Vol. 6, No. 5/6, p. 829-840, 1985.
Great Britain

0191-9059/85 53 ...
© 1985 Pergamon Press

# SATURATED SALT GRADIENT SOLAR POND

A. TSINOBER, Z. HAREL and A. MELAMED

Department of Fluid Mechanics and Heat Transfer,
Faculty of Engineering, Tel-Aviv University,
Ramat-Aviv 69978, Israel.

Summary

A small scale experimental saturated, non convective solar pond was constructed and operated experimentally for a few months.

Temperature and density gradient were reached in the pond with a bottom temperature as high as 98°C. The pond was eventually destabilized as a result of reaching a high temperature gradient in a shallow pond, with no heat extraction.

Thermal efficiency of saturated ponds is expected to reach values higher by 60% than in non saturated ponds and rates of generation of electric power 175% more than in non saturated ponds.

In addition to the above superior performance, saturated ponds are free from some of the major drawbacks of the non saturated ponds.

(a) No need for make up of salt after the pond is set up.
(b) No need to drain and dispose of water from the pond.
(c) When hygroscopic salt solutions are used (e.g. $MgCl_2$), practically, no make up of water is required.
(d) Little monitoring and supervision of the pond is required; in saturated ponds the temperature and density gradients are self correcting.

## 1. Background

Solar ponds were developed in Israel, the United States and a number of other countries since the late nineteen fifties. Their performance is based on salt solutions with high salt concentration at the bottom, gradually diminishing towards the surface. Such ponds are generally designed to operate at salt concentrations below saturation. The ponds generate heat at temperatures below 80°C to 90°C, which may be supplied for direct use, or converted to electric power by turbines designed for operation at low temperatures.

A number of such ponds were built for generation of heat and electric power. The world's largest pond of 0.25 square kilometers area, with a five megawatt power plant, was recently completed at the Dead Sea in Israel.

The unsaturated solar ponds require constant engineering supervision and a continuous supply of water and salt as well as means for disposal of substantial quantities of salt water.

A new type of solar pond was developed in 1978, the saturated salt gradient pond. The operation of this pond, similar to the previous ones, is also based on a salt solution in which the concentration of salts increases from the surface to the bottom of the pond. This was achieved in the new pond system by applying a saturated solution of salt, the solubility of which increases with temperature.

By selection of certain salts a saturated pond, once erected requires very little maintenance and no make up of salt or water. It may generate heat at temperatures in the range of 120°C to 150°C (with thermal efficiency diminishing as temperature rises).

The above characteristics of the saturated pond makes it applicable for generation of low pressure steam. It may also be applied in small scale operations (requiring little attendance and no make up of salt and water or disposal of salt water).

Saturated solar ponds were set up and operated experimentally on very small scale in the United States and Israel. No commercial or large scale operation has yet been undertaken.

 BEST AVAILABLE DOCUMENT

6

## 2. Experimental Apparatus

An experimental saturated non convective solar pond was built and operated at the University of Tel-Aviv.

A saturated waste brine solution from the Dead Sea Potassium Plant in Sodom (solution "F") comprised of 95% (molecular ratio) magnesium chloride to 5% calcium chloride was used for the pond solution.

The pond was made of a square dens polypropylene 2.5 mm thick sheet encased inside a concrete structure 4 m x 4.5 x 0.9 m.

A polystyrene insulation layer, 10 cm thick was placed between the polypropylene lining and the concrete walls and bottom.

Copper-constantan thermocouples were used to determine temperatures in the pond solution at 5 cm vertical intervals. Measurements were made and data recorded continuously at 30 minutes intervals.

Solar insolation on a horizontal surface at the pond was continuously measured and recorded simultaneously with the temperatures in the pond. Measurements were made in duplicates, using two photovoltaic units. Measurements of light penetration into the pond as well as reflection of light from the pond surface and bottom were made manually several times during the operation of the pond. For comparison, light penetration was measured also in a large vessel containing tap water (drinking standard).

## 3. Experimental Operation.

The pond was filled on May 15, 1984, with a saturated "F" solution to a depth of 87 cm. Concentration of the salt solution was 32% and its density (determined on the basis of measurements of weight and volume) 1.28 gr/cc. The temperature of the solution was 33°C.

The pond solution was heated up electrically and maintained at a temperature of 67°C for 5 days. Evaporation from the pond solution took place and the depth of the pond solution came down to 60 cm.

At this time, on May 20, 1984, heating of the pond solution ceased and it started to cool down.

A layer of salt precipitate, 2 to 5 cm thick was formed on the bottom of the pond. The temperature of the pond solution was 45°C. The salt precipitate at the bottom was scraped manually to the sides of the pond and the black polypropylene bottom was exposed on May 22, 1984.

Following the exposure of the black bottom of the pond, the low layers of the pond solution were gradually heated up and a temperature gradient was developed first at the bottom layer and then it was formed in the middle and upper layers throughout the depth of the pond.

At the same time, the salt at the bottom of the pond dissolved gradually, until most of the area of the black pond bottom was exposed. The bottom layers of the pond were periodically (every day or two) slightly mixed manually to bring about an upward flux of salt to make the salt available at all levels of the pond.

The temperature at the surface of the pond was 36°C to 40°C at 2 p.m. and 26°C to 29°C at 05 a.m. The temperature at the bottom rose gradually until it reached a maximum of 98°C. At the same time a temperature gradient was established from the surface of the pond to the bottom (Fig. 1). At the same time when the maximum temperature of 98°C at 2 p.m. was reached the temperature gradient started gradually breaking into "steps" (Fig. 2) with practically no gradient at certain layers of the pond until the temperature of the pond came down to 85°C to 80°C at the bottom of the pond.

Solar insolation at the pond was measured simultaneously with the measurement of temperatures in the pond.

## 4. Theory and Evaluation of Results

### A. Stability.

Stability of the salinity gradient in the non convective zone is necessary for steady operation of the pond. The saturated solar pond concept, in which convection is abated by a temperature depending density gradient requires that the decrease in density due to temperature increase be offset by an increase in salt concentration from increased solubility with temperature. Thus, both density and temperature increase with depth. For a system, which may have supersaturation conditions the stability criterion as calculated by Rothmeyer [1] is given by:

$$\frac{\Delta T}{\Delta Z} < \frac{\Delta S}{\Delta Z} \times \left(\frac{\beta}{\alpha}\right) \frac{D_{12} + \nu}{K_T + \nu \left(\frac{\beta}{\alpha} D_T\right)} \qquad (1)$$

BEST AVAILABLE DOCUMENT

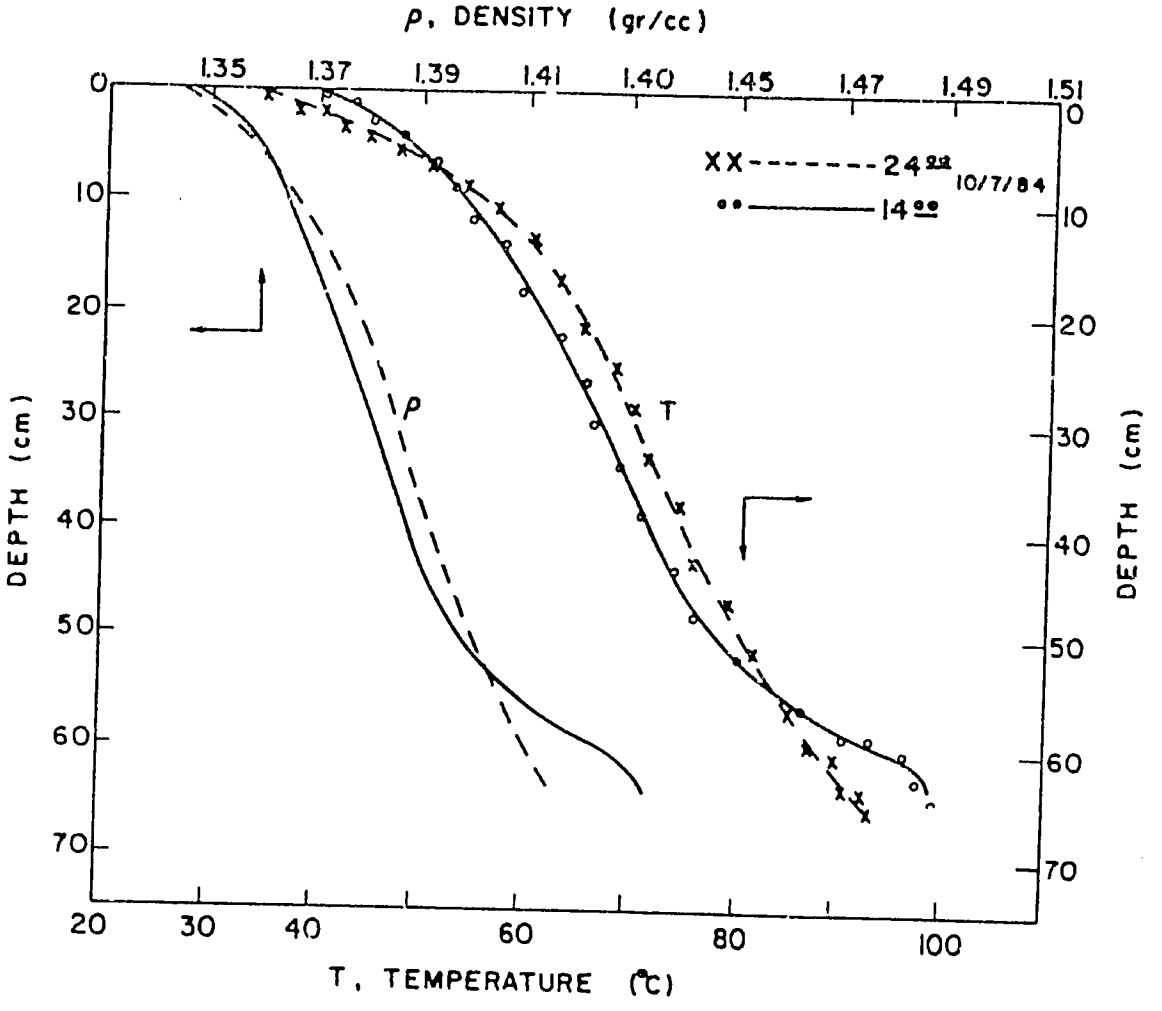


Fig. 1 Temperature and density gradients

BEST AVAILABLE DOCUMENT

8

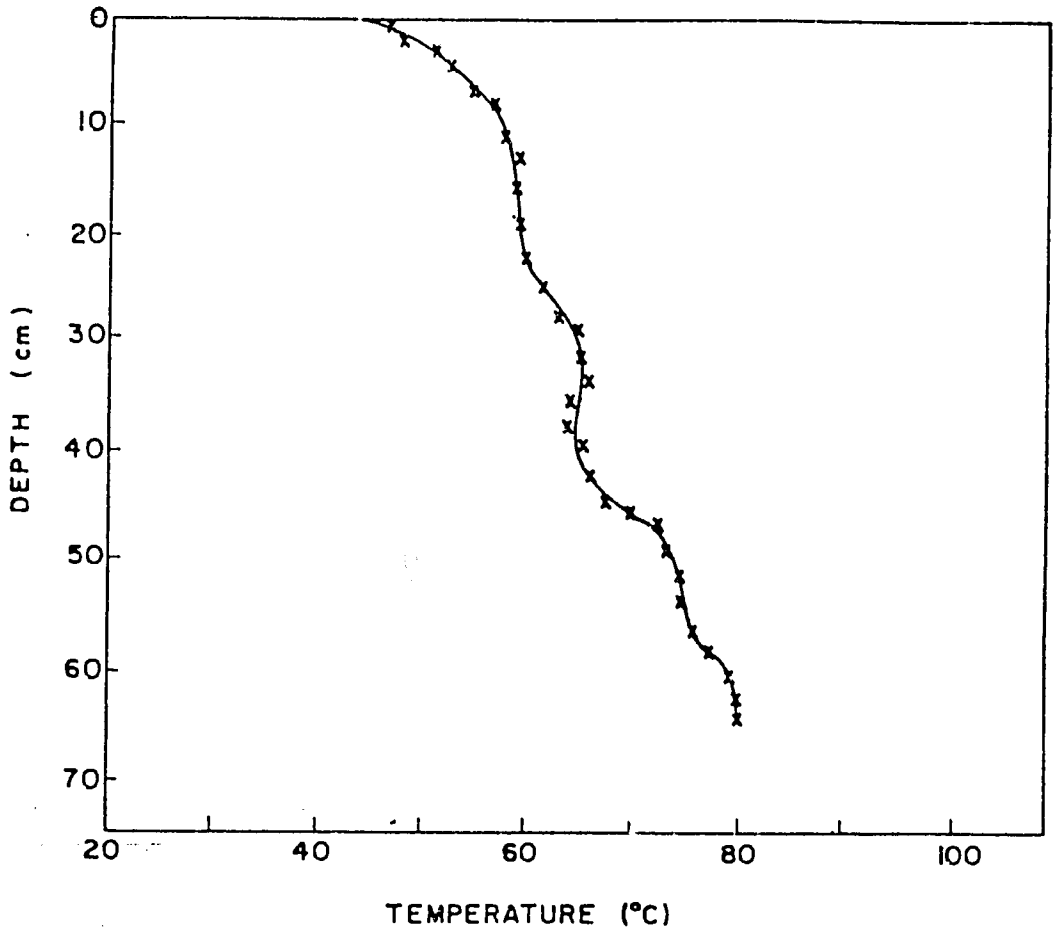


Fig. 2 Temperature gradient for an unstable saturated pond.

BEST AVAILABLE DOCUMENT

where

| | |
|---|---|
| $\frac{\Delta T}{\Delta Z}$ | Temperature gradient |
| $\frac{\Delta S}{\Delta Z}$ | Salt gradient |
| $\beta = \frac{1}{\rho}\frac{d\rho}{dS}$ | Functional change in density due to salt solubility |
| $\alpha = -\frac{1}{\rho}\frac{d\rho}{dT}$ | Functional change in density due to temperature. |
| $D_{12}$ | Binary diffusion coefficient |
| $\nu$ | Kinematic viscosity |
| $K_T$ | Thermal diffusivity |
| | $D_T = K_S\, S_T\, C\, \frac{m_1}{m_1+m_2}$ |
| $S_T$ | Soret coefficient |
| C | Concentration of solution |
| $m_i$ | Molar concentration per unit volume of component 1,2. |

The term in parenthesis is the change due to the soret effect. For most applications this term can be neglected, since its contribution amounts to only 0.2 percent. If the term in parenthesis is neglected the above condition agrees with the procedure used by previous authors [2,3,4] who studied this problem in relation to a double diffusive fluid systems.

Weinberger [5] examined magnesium chloride as a candidate salt and has shown that it is suitable for non convective salt gradient solar ponds.

The basis of saturated solar pond theory relies upon the fact that physical stability of a fluid in a gravitational field depends upon an increase in density with increase in depth [6]. This can be expressed as:

$$\frac{d\rho}{dZ} > 0 \tag{2}$$

The change of the density with depth can be expressed as:

$$\frac{d\rho}{dZ} = \frac{\partial\rho}{\partial S}\frac{dS}{dZ} + \frac{\partial\rho}{\partial T}\frac{dT}{dZ} \tag{3}$$

For a saturated fluid, concentration can be approximated by a function of temperature and therefore equation 3 reduces to:

$$\left.\frac{\partial\rho}{\partial S}\right|_{saturation} = 0 \qquad \frac{d\rho}{dZ} = \frac{\partial\rho}{\partial T}\frac{dT}{dZ} \tag{4}$$

This simplification of the criteria for stability allows analytical investigation of the suitability of various salts for use in a saturated solar pond.

For a saturated magnesium chloride solution the density function of temperature [6] is:

$$\rho(T) = 1.49 - 1.08\exp(-4) - T + 3.44\exp(-6) - T^2 \tag{5}$$

The criterion for stability in this equation is a positive number all over the range of temperatures for the derivative of the density with the depth (assuming a positive temperature gradient).

In the experimental pond the temperature rose in the entire depth of the pond. When the maximum bottom temperature of 98°C with a continuous temperature gradient were reached the entire supply of salt in the pond was exhausted. Then in certain layers of the pond subsaturation concentration levels of salt solution resulted in convection.

BEST AVAILABLE DOCUMENT

Under these conditions the stability criterion expressed in equation 1 was not met.

B. Light penetration.

The solar radiation which penetrates the pond surface is attenuated exponentially with depth as energy is absorbed by the fluid layers. Bryant and Colbeck [8] used the following equation:

$$h(Z) = a-b\cdot Ln(z+\delta) \tag{6}$$

From experimental results in the magnesium chloride pond, a = 0.51 and b = 0.071 when Z is measured in meters from the non convective zone and $\delta$ is the depth of the top convective zone.

The optical transmission curve may be drawn (Fig. 3). Which shows the function of solar energy penetrating Sea water [5] and Tap water.

It may be seen that for saturated magnesium chloride a greater fraction of solar radiation reaches depth Z in comparison with Sea water and Tap water.

C. Thermal performance.

A procedure was developed for a complete analysis of the temperature gradient in a saturated pond and extraction of energy processes. Basic equations that were suggested in previous studies [7-9] are applied.

The system to be considered is assumed to be described by a one dimensional heat transfer problem.

It is assumed that the stabilizing salinity gradient is sufficiently large to prevent any large scale convective currents in the solar pond.

The vertical temperature distribution, T(Z), can be calculated from the one dimensional steady state heat conduction equation,

$$K\,\frac{d^2T(Z)}{dZ^2} = E\,\frac{dh(Z)}{dZ} \tag{7}$$

where K is the thermal conductivity of the pond solution in W/m C, and E is the solar insolation in W/Sq. meter, and dh(Z) is the fraction of the solar insolation remains at a depth Z.

Integration of equation 7, yields

$$K\,\frac{dT(Z)}{dZ} = h(Z) + C_1 \tag{8}$$

Introducing $\Theta$, defined as $\Theta = T-Ts$. equation (8) can be written as:

$$K\,\frac{d\Theta(Z)}{dZ} = E\,h(Z) + C_1$$

Integration of the above equation results in

$$-K\Theta \rightarrow E\,a\,z - b\ln(z+\delta)dz = C_1Z+C_2 \tag{9}$$

$C_1$ and $C_2$ in the above equation are constants and can be determined by the boundary conditions.

The first condition is that the temperature at z=0 should be in equilibrium with the ambient temperature.

Boundary conditions at the surface of the pond are determined by equating the upward heat flux at the pond surface with the heat dissipated at the pond surface through the mechanism of evaporation, convection and radiation

$$z=0 \qquad T=Ts(Pw) \qquad \theta=0$$

Applying the above condition in equation (9):

$$C_2 = -\delta\,b\,\ln(\delta) \tag{10}$$

The value of $C_1$ can be determined by an energy balance at the bottom of the non convecting zone namely the bottom of the pond.

BEST AVAILABLE DOCUMENT

11

$$-K\left.\frac{d\theta}{dZ}\right|_{Z=d} + \tau\,[a-b\ln(d\delta)] = Q \qquad (11)$$

Where Q is the rate of heat extraction from the bottom of the pond and $\tau$, is the absortivity coefficient of the bottom surface of the pond (measured as 0.7 in the magnesium chloride pond).

It is seen from equations 8 and 11 that the value of $C_1$ is equal to Q.

The operating temperature of the pond Tw (temperature of the bottom) can be obtained by evaluating equation at z=d therefore

$$-\theta_W + \tau Eb\left[\frac{ad}{b} + d\ln(d+\delta) + d - \delta\ln(d+\delta)\right] = Qd - \delta Eb\ln(\delta) \qquad (12)$$

By dividing the above equation by E and d and rearranging results in

$$\frac{Q}{E} + \frac{D\theta w}{Ed} - \frac{\tau b}{d}\left[d\ln(\delta) + \frac{ad}{b} - d\ln(d+\delta) + d - \delta\ln(d+\delta)\right] = 0 \qquad (13)$$

and defining the efficiency of the pond as

$$\eta = \frac{Q}{E} \qquad (14)$$

leads to the equation

$$\eta + \frac{K\theta w}{Ed} - \frac{\tau b}{d}\left[\delta\ln\left(\frac{\delta}{\delta}+d\right) + d\left(\frac{a}{b} + 1 - \ln(d+\delta)\right)\right] = 0 \qquad (15)$$

In the above equation the efficiency of the saturated pond is expressed as a linear function of $\theta w/E$ with coefficients depending on the physical characteristics of the pond salt solution and the geometrical dimension of the pond.

Figure 4 shows the efficiencies of saturated and non saturated ponds as a function of the depth of the non convecting zone for various pond bottom temperatures.

D. Quantitative analysis.

A comparative quantitative analysis of a saturated solar pond, using a magnesium chloride solution vs. a non saturated pond based on a solution of sodium chloride was carried out.

The main characteristic parameters of the two different ponds are presented below:

| | Non saturated Sodium chloride pond | saturated Magnesium chloride pond |
|---|---|---|
| Light extinction coefficient | 0.08 | 0.071 |
| viscosity at the pond surface | 1 Cp | 25 Cp |
| Thermal conductivity | 0.605 W/m, C | 0.45 W/m, C |
| density: at the surface<br>at the bottom | 1.0 gr/cc<br>1.1 gr/cc | 1.4 gr/cc<br>1.56 gr/cc |
| Heat capacity | 1.0 | 0.55 |
| Bottom reflectivity | 0.03 | 0.3 |
| Boiling temperature | 110 C | 120-180 C |

E. Discussion

The saturated pond demonstrated by a system applying a saturated magnesium chloride solution is characterized by certain physical qualities, the combined effect of which results in a superior performance in comparison to non saturated ponds.

BEST AVAILABLE DOCUMENT

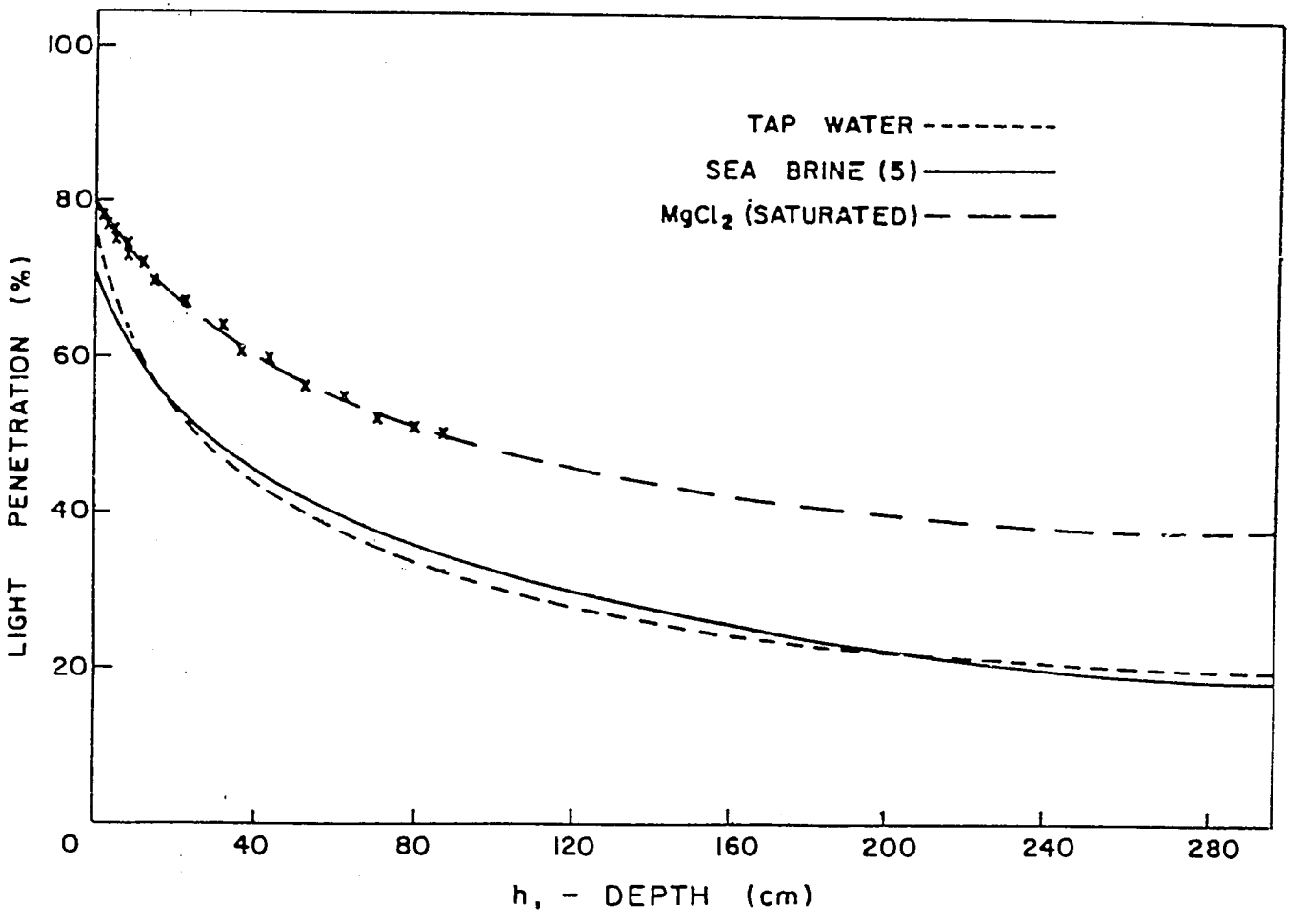


Fig. 3 Optical Transmission.

BEST AVAILABLE DOCUMENT

13

(1) Light penetration

At a depth of 1.50 m light penetration in the saturated solution was 62.5% higher than in a non saturated pond. This result obtained in the above experimental pond agrees well with theory. The better light penetration may very likely be attributed to the complete elimination of biological originated suspended matter, at salt concentrations of 40% to 50% and more, and densities in excess of 1.32 gr/cm.

(2) Viscosity

The high viscosity of a saturated $MgCl_2$ may improve the stability of the pond.

(3) Thermal conductivity

Lower thermal conductivity of the saturated pond would reduce conductive heat losses through the non convective zone of the pond and improve the overall thermal efficiency.

(4) Bottom reflectivity

Bottom reflectivity in saturated ponds with a salt deposit at their bottom (a reflectively coefficient of 0.3 measured in the experimental pond) impairs to some extent the thermal efficiency of the saturated ponds. Nevertheless, as shown above, other factors outweigh this effect.

The adverse effect of bottom reflectivity may be partially offset by increasing the total depth of the pond. For example, the overall thermal efficiency of a pond of a total depth of 3m, with a low convective zone of 1.5 m, is expected to be 13% higher than that of a pond 1.5 m, deep with a very thin low convective zone (fig. 4).

This would result in a thermal efficiency of the saturated pond 61% higher than in a non convective pond at 80°C. Electric power generation would then be in a saturated pond at 120°C 2.75 times higher than in a non-saturated pond at 80°C.

(5) Boiling temperature

Non saturated ponds are limited by their low boiling temperature to heat extraction only in the form of hot water and generation of power at low efficiencies. The higher boiling temperature of the saturated solution of certain salts, e.g. magnesium chloride, opens new option for solar ponds, for production of low pressure steam and generation of power at a substantially higher thermal efficiency.

F. Summary and conclusions

A small scale experimental saturated, non convective solar pond was constructed and operated experimentally for a few months.

The shallow depth of the pond (total depth 75 cm) has had a restrictive effect on the range of performance of the pond.

Nevertheless, significant results were obtained on some of the physical characteristic parameters of the system.

Temperature and density gradient were reached in the pond with a bottom temperature as high as 98°C. The pond was eventually destabilized as a result of reaching a high temperature gradient in a shallow pond, with no heat extraction.

A comparative analysis of the predicted performance of saturated solar ponds vs. non saturated ones has resulted in significantly higher thermal efficiencies of the saturated ponds.

Thermal efficiency of saturated ponds is expected to reach values higher by 60% than in non saturated ponds and rates of generation of electric power 175% more than in non saturated ponds.

In addition to the above superior performance, saturated ponds are free from some of the major drawbacks of the non saturated ponds.

(a) No need for make up of salt after pond is set up.

(b) No need to drain and dispose of water from the pond.

(c) When hygroscopic salt solutions are used (e.g. $MgCl_2$), practically, no make up of water is required.

(d) Little monitoring and supervision of the pond is required; in saturated ponds the temperature and density gradients are self correcting.

In view of the above it may be concluded that there is a great potential in saturated, non convective solar ponds, waiting to be developed.

BEST AVAILABLE DOCUMENT

BEST AVAILABLE DOCUMENT

A. TSINOBER, Z. and A. MELAMED

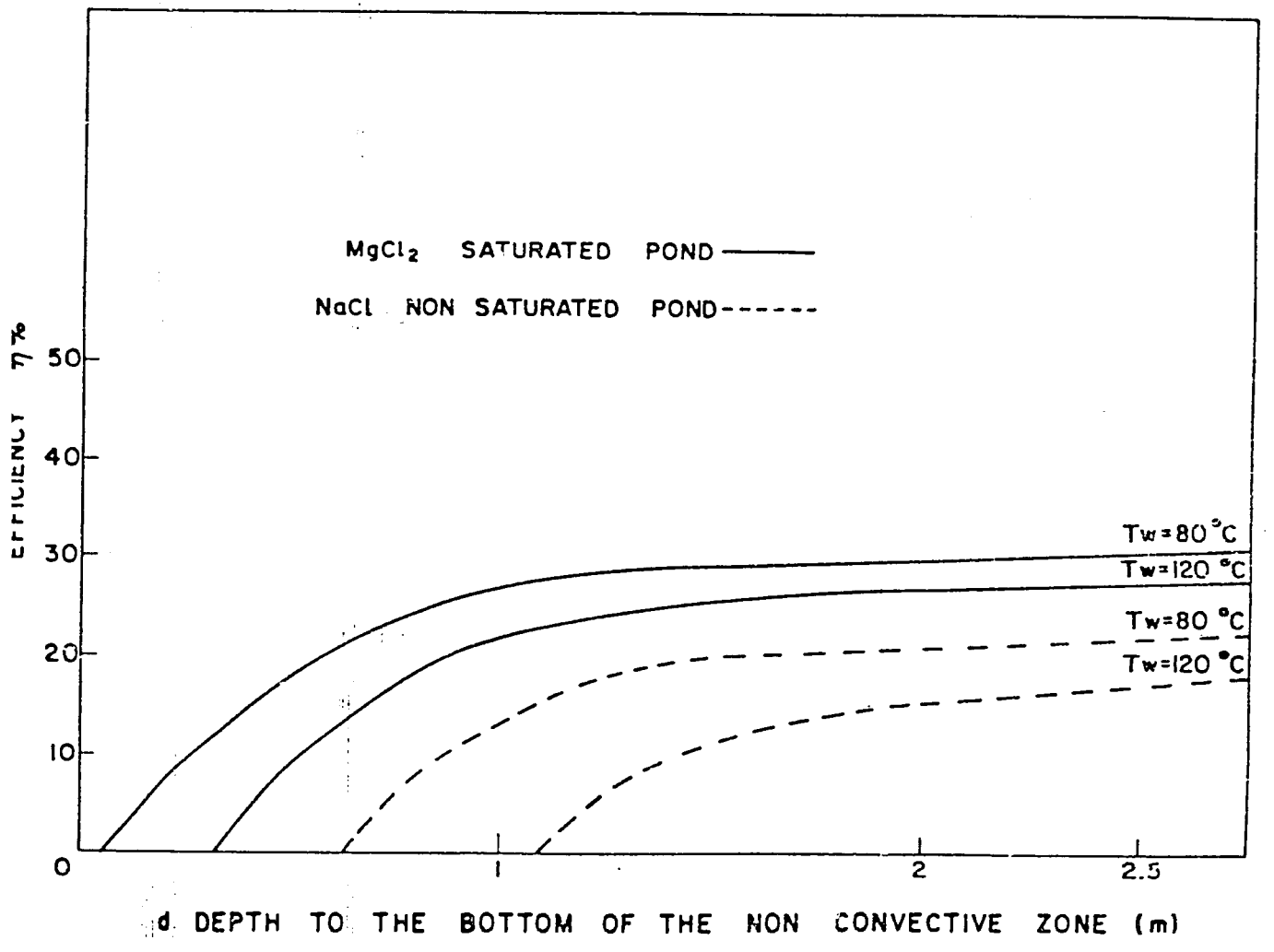


Computed Thermal Efficiency of a Saturated $MgCl_2$ Solar Pond VS a Non Saturated NaCl Pond

## REFERENCES


1. Rothmeyer, M.K. "Saturated Solar Pond, Modified Equations and Results of Laboratory Experiment", MSc. thesis, The University of New Mexico, 1979.
2. Veronis, G., "Effect of a Stabilizing Gradient of Solute on Thermal Convection", J. Fluid Mech., Vol. 34, 1968, pp. 315-336.
3. Hull, J.R., et al., "Solar Pond Salt Gradient Instability Prediction by Means of a Thermohydrodynamic Computer Code", Proc. AS/ISES, Philadelphia, May 26-30, 1981, pp. 812-816.
4. Turner, J.S., Buoyancy Effects in Fluids, Cambridge at the University Press, 1973.
5. Weinberger, H., "The Physics of the Solar Pond", The Solar Pond Project No. 100-108-61, National Physical Laboratory of Israel, 1964.
6. Ochs, T.L. and Bradley, O.J., "Stability Criteria for Saturated Solar Pond", Proc. 14th Inter-Society Energy Conversion Engineers Conference, August 5-10, 1979, Boston, Mass.
7. Bryant, H.C. and Colbeck, I., "A Solar Pond for London", Solar Energy 19, 321, 1977.
8. Wang, Y.F., and Akbarzadeh, A., "A Parametric Study on Solar Pond", Solar Energy 30, 555, 1983.
9. Kooi, C.F., "The Steady State Salt Gradient Solar Pond", Solar Energy 23, 37, 1979.


## NOMENCLATURE

| | |
|---|---|
| a | Constant |
| b | Light extinction coefficient |
| Ci | Constants |
| d | Depth of the non convective zone |
| $D_{12}$ | Binary diffusion coefficient |
| E | Intensity of solar radiation reaching the pond surface. |
| g | Gravitational acceleration |
| h(z) | Intensity of solar radiation penetrates depth |
| K | Thermal conductivity |
| m | Molar concentration |
| Pw | Water vapor pressure |
| Q | Heat extraction from the bottom of the pond |
| S | Solubility of salt |
| St | Soret coefficient |
| T | Temperature |
| Z | Depth |

**Greek Letters**

| | |
|---|---|
| $\alpha$ | Thermal expansion |
| $\beta$ | Solubility expansion |
| $\mu$ | Viscosity |
| $\nu$ | Kinematic viscosity |
| $\rho$ | Density |

BEST AVAILABLE DOCUMENT

$\tau$ bottom absorption coefficient

$\theta$ Temperature difference between the bottom and the surface of the pond

BEST AVAILABLE DOCUMENT

## Appendix B

## EXPERIMENTAL FACILITIES AND TECHNIQUES

### Experimental Apparatus

The experiments were conducted in a square glass tank of 80 cm height and 50 cm sides, with a bottom (50x50 cm) made of a 3 mm brass plate, shown schematically in Fig. 1. Below that plate was a series of 10 flat plate heating resistance elements (Cromalox reference SE-17 made in USA), 48 cm long, 2.5 cm width and 0.8 cm thick which provide a heat source.

The heating elements were located in such a way that the heating was uniform over the bottom plate.

The sidewalls of the tank (12 mm thick glass, joined together with RTV silicon rubber), were insulated by special transparent thermal insulation units, each of them consisted of five thin (1.5 mm thick) perspex plates, separated by 4.5 mm air gaps. This special insulation was found to be sufficient for the temperature differences imposed (not larger than 65 °C), and allowed continuous illumination and flow visualization throughout the experiment. The heated bottom with the heating elements were insulated by a 5 cm glass wool insulation.

### Instrumentation and measurements

### Temperature measurements

All Temperatures were measured by thermocouples type (copper-constantan) with an accuracy of ± 0.3 °C.

### Bottom temperature measurments

Fifteen thermocouples (type T) were distributed at the bottom of the tank, (on the brass plate), in order to measure the average temperature on the plate. For measuring the temperature exactly at the surface of the brass plate, the thermocouples were installed in it by a special technique.

### Temperature profiles measurments

To provide quick measurments of the temperature profile in the tank, an array of 10 thermocouples (type T) was used. These thermocouples were mounted on a perspex rod, (8 mm in diameter), at 5 cms elevation intervals, starting from the botom of the tank. The perspex rod could be moved from one point to another manually and thus cover the entire area of the tank.

BEST AVAILABLE DOCUMENT

The output of the thermocouples was measured, linearized and recorded by a data processor system (Data logger 65 ADP made in W. Germany). A specially designed feedback and control system, included the electrical power source and the data logger, were applied, using a PDP 11/23 or IBM-PC computers.

The measured average bottom temperature was compared to a programmed value and on the basis of the results, the power source was turned on or off, controlling the heat supply to the heating elements below the brass plate. The system thus allowed the bottom temperature to rise to a prescribed value, and afterwards maintained the bottom at this temperature throughout the rest of the experiment.

Density measurments

The density of the fluid was measured using Archimedes' principle. The buoyant force of a glass rod (dimensions 150 mm x 4 mm diameter) was measured using a "LVDT" (force gage), which is accurate to 0.001 grams with uncertanty of 0.25% The DVM was positioned at 60 cm above the top of the tank, on a mechanical conveyance system which was monitored by a computer.

The apparent mass of the quartz glass float was then measured at increments of 2 cm from the surface of the solution down to the bottom. The density can be calculated by the formula:

$$\rho(z) = \frac{(m_a - m(z))}{V_o}$$

where:

$m_a$ = mass of quarts float

$m(z)$ = apparant mass of submerged float

$V_o$ = volume of the quarts float

$V_o$ was calculated from $m_a$ and the density of the quarts glass, $\rho_a$ = 2.203 grams per $cm^3$.

The maximum error in $\rho$ by this method amounts to 0.003 grams per $cm^3$

Temperature measurement were taken simultaneously with the measurment of the density in each level, using a thermocouple, which was mounted on a lead cone, coated by a spacial coating material, to prevent reaction between the solution and the lead. In this way each measurement of the density included the correct temperature at the point measured.

BEST AVAILABLE DOCUMENT

All the measured data was recorded on the IBM-PC computer, which was used to analyse the data.

Traversing system

The glass rod and the single thermocouple were traversed vertically through the fluid, completing one vertical scan in a period of 40 minutes. The traversed mechanism (Fig. 1), operated by a step motor and an indexer. The indexer was controlled by the data logger and the computer.

Flow Visualization Techniques

The flow within the stratified medium was visualized mainly by introducing small plastic particles with random densities, between 1.15 to 1.45 gr/cm$^3$ into the tank solution. The solution was then illuminated by a vertical sheet (0.5 mm thick) of white light, which was generated by a square converter connected by an optical fiber to a cold light source (made by VOLP in W. Germany). This was sufficient for visualization of the flow in the experimental tank.

The flow patterns arising during the experiment were observed using the shadowgraph technique. It should be emphesized that linear gradient can not be observed in this technique, due to the fact that the technique is sensitive to the changes of the second derivative of the density with respect to the space.

The light source for the shadowgraph was a 3 Watt argon laser (Spectra-Physics 165 made in W.Germany). The beam was expanded to a concentrated mirror 280 mm in diameter through an expanding lens. The expending lens was located at the focal length of the mirror and therfore a parallel circular beam was obtained. This beam was oriented horizontally in a direction parallel to the heated plate in the mid-height of the tank. The parallel beam was projected on a screen and photographed by a camera (Nikon F2SB).

It should be noted that since the shadowgraph produces an integrated image through the fluid, small departures from two dimensionality may cause significant variations in the resulting pictures, by producing spurious small scale structures. Therefore no quantiitaive data was extracted from the shadowgraph pictures.

BEST AVAILABLE DOCUMENT

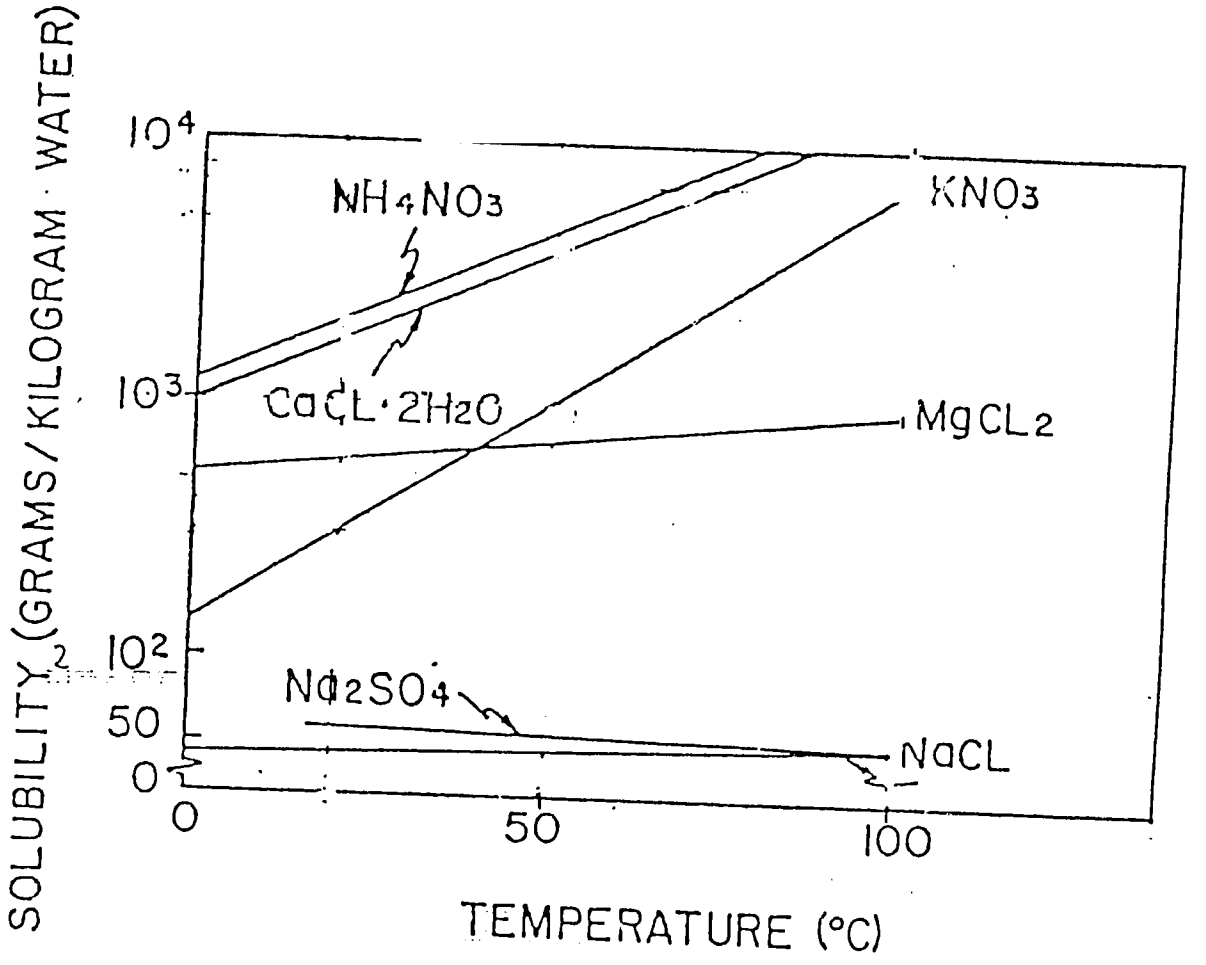


Figure 1: Solubility as function of temperature (Leskuk and Zaworski 1975).

BEST AVAILABLE DOCUMENT

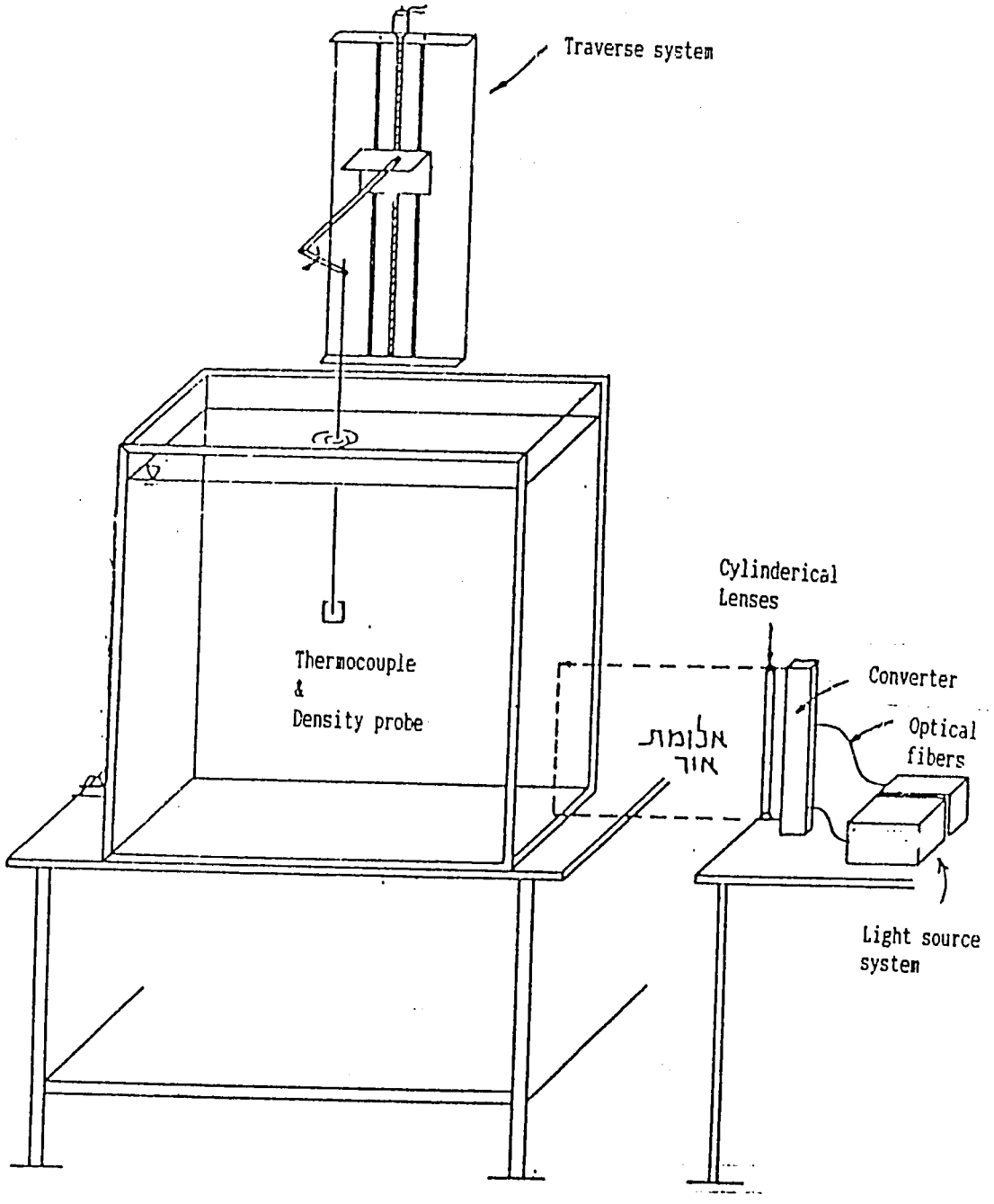


Figure 1. Schematic description of the experimenal apparatus

BEST AVAILABLE DOCUMENT