PN AEM 554
C 8-205
PN-AEM 554

Asian Institute of Technology
Bangkok Thailand

FARMER DRIVEN ELECTROSTATIC LOW VOLUME SPRAYER

Innovative Scientific Research US-Israel CDR Program
Grant No. 936-5544-G-00-8057-00

Second progress report for the period
ending August 31, 1989

Division of Agricultural and Food Engineering
Asian Institute of Technology
Bangkok, Thailand

Rec'd in SCI: JAN 04 1990

FARMER DRIVEN ELECTROSTATIC LOW VOLUME SPRAYER

Second progress report for the period
ending August 31, 1989

Submitted by
Prof. Chandra Prakash Gupta, Principal Investigator
Prof. Gajendra Singh, Co-Principal Investigator
Mr. M. Parameswarakumar, Research Associate
and Mr. S. Ganapathy, Research Associate

Division of Agricultural and Food Engineering
Asian Institute of Technology
Bangkok, Thailand

December 1989

Table of Contents

Chapter		Title	Page
		Summary	1
1		Design of an Induction Electrostatic Sprayer	1
	1.1	General	1
	1.2	Materials	1
	1.3	Design	2
2		Testing of Prototype Sprayer	3
	2.1	Experimental Setup	3
	2.2	Experimental Procedure	6
	2.3	Results and Discussion	7
	2.4	Conclusions	12
3		Design of an Electrostatic Sprayer Using Contact Charging	16
	3.1	General	16
	3.2	Materials	16
	3.3	Design	16
4		Development of a High Voltage Circuit	18
	4.1	General	18
	4.2	Development of Charging Circuit	18
5		Performance Evaluation of Sprayers	20
	5.1	Materials and Methods	20
	5.2	Results and Discussion	20
	5.3	Conclusions	21
6		Procurement of Keithley Electrometer	21
7		Targets	21
8		Visit by Prof Law	21
9		Visit by Prof Gupta	21
10		Plan for future work	21
		References	22

FARMER DRIVEN ELECTROSTATIC LOW VOLUME SPRAYER

Summary

A prototype of hand held elecrostatic sprayer charging liquid drops by induction for use with water based chemicals has been developed using a spinning disc sprayer made in India and a Venus C-30 power supply unit. Experiments conducted in the laboratory indicated a two fold improvement in deposition upon charging with the electrostatic sprayer when compared to uncharged sprays. The prototype sprayer can work continuosly for 30 hours using four D size batteries. A system to charge the spray by contact charging method was also developed and installed on a spinning disc sprayer. Efforts were also made to develop a charging circuit for 20-25 kV with the locally available materials. Performance evaluation of electrostatic sprayers and conventional sprayers were carried out. To assist in the charge measurement studies, faraday cages were designed. Plastic plants were procured for use as targets in the laboratory study of deposition of spray droplets.

1 Design of Electrostatic Sprayer Based on Induction Charging

1.1 General

A prototype hand held electrostatic sprayer capable of charging water based spray chemicals by induction was developed with a view to help the farmers of the third world to enjoy the advantages of the electrostatic spraying technology and to make use of the locally available spray chemicals. Among the three methods of charging, induction charging is reported to be extremely beneficial for applications in agriculture owing to its comparatively less power requirement and ease of fabrication and maintenance.

1.2 Materials

The spinning disc and the driving motor of an ASPEE CDA sprayer, made in India, were used in the development of the prototype. The disc rotates at a speed of 5500 r.p.m when energised by 4 dry cell batteries.

The high voltage source used is model C-30 power supply manufactured by Venus Scientific Inc, USA. It operates on variable input supply range 5-12 V d.c. and gives an output of 1000-3000 V d.c. Maximum output current at 3000 V is 500 μ A.

Four dry cell "D" size batteries were used to give an input of 6 volts to the power supply and the d.c. motor. The sprayer can continuosly operate for 30 hours with these batteries.

The disc is made of PVC with a aluminium ring fixed on it.

1.3 Design

The features of the sprayer designed are shown in the Fig. 1.1. The shaft coming out of the motor is supported by a low friction ball bearing housed at one end of a non conducting PVC cylinder shaft. To the shaft protruding to the other side of the bearing are mounted atomising and induction electrode discs. The electrode is an aluminium ring fixed on a PVC disc. The high voltage supply is connected to the bearing and then to the disc through a fine thread of copper. Conducting washers are mounted between the electrode and the atomising disc to maintain a gap of 1.8 mm.

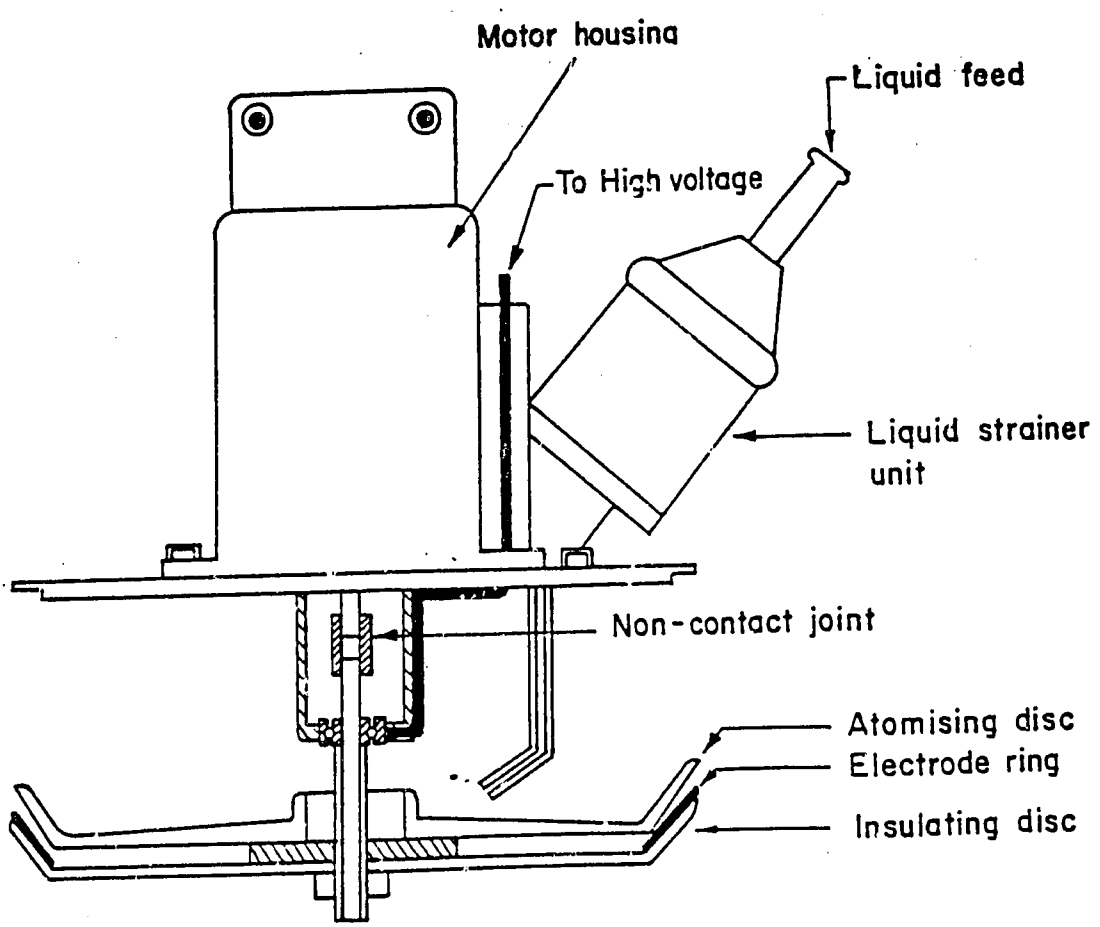

Fig. 1.1 Schematic diagram of the electrostatic sprayer using induction charging

2. Testing of Prototype Sprayer

2.1 Experimental Setup

The construction details of the field simulator and its components, namely spray tool carrying frame and motor cable arrangement, power supply, target table and its selection criteria are eloborately dealt with in the progress report for the first phase of the project ending February 1989.

2.1.1 Installation of Chamber with Wind Barriers

The spray trolley system was housed inside a chamber constructed with polyethylene sheet which also serve as wind barriers.

2.1.2 Installation of Humidity Meters

Thermometers and humidity meters were installed to record the climatic parameters such as relative humidity and ambient temperature. These parameters are recorded to observe their effect on deposition pattern of charged sprays.

2.1.3 Design of Faraday Cage

Rectangular cage

A recangular cage of acrylic 30 x 30 cm with slides to receive three wire mesh frames of stainless steel of sizes 40,50 & 80 squares/square inch were fabricated (Fig. 2.1) to measure charges carried in the spray droplets. A tray was provided below the bottom most mesh to collect the spray liquid passing through the meshes. The spray liquid emanating from the nozzle positioned at specific heights above the top mesh will leave the charges carried to the meshes before getting collected at the tray.

This cage can be used in the experiments conducted with electrodyn sprayer as there is not much thrust on the spray horizontally when compared to that in the vertical plane and consequently the spray swath can be conveniently received in the meshes.

Circular cage

A cicular faraday cage (Fig. 2.2) was fabricated to measure the charges carried by a spray liquid emanating from a spinning disc sprayer wherein the spray is directed horizontally.

The cage consists of three concentric circular stainless steel meshes of diameter 110, 90 and 70 cm. Each circular mesh is made into four compartments, the compartments being joined by an aluminium I angle. The meshes are of size 60 squares/square inch. The cage is supported on an insulated tray of acrylic meant to collect the spray intercepted by the meshes.

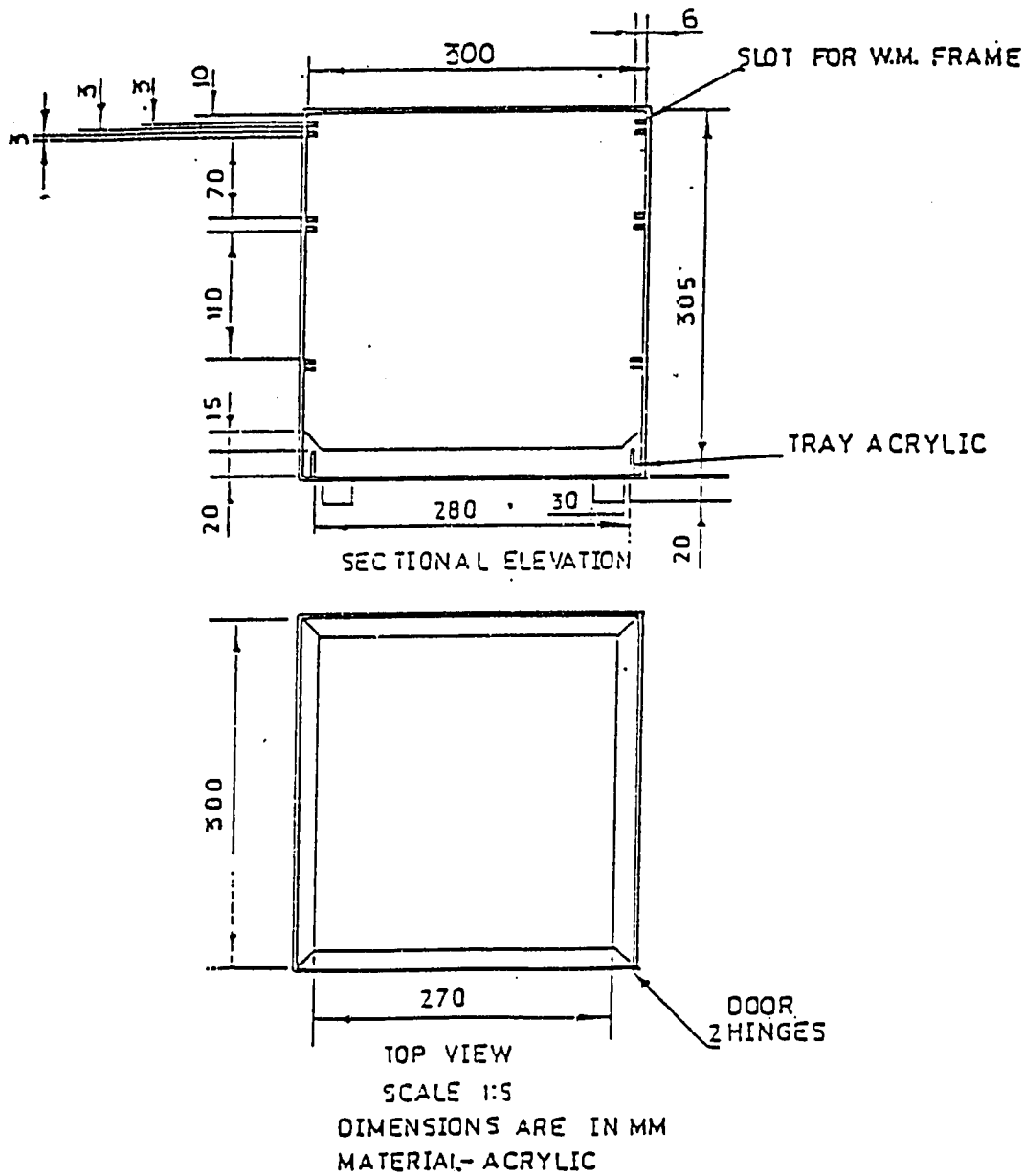

Fig. 2.1 Rectangular faraday cage

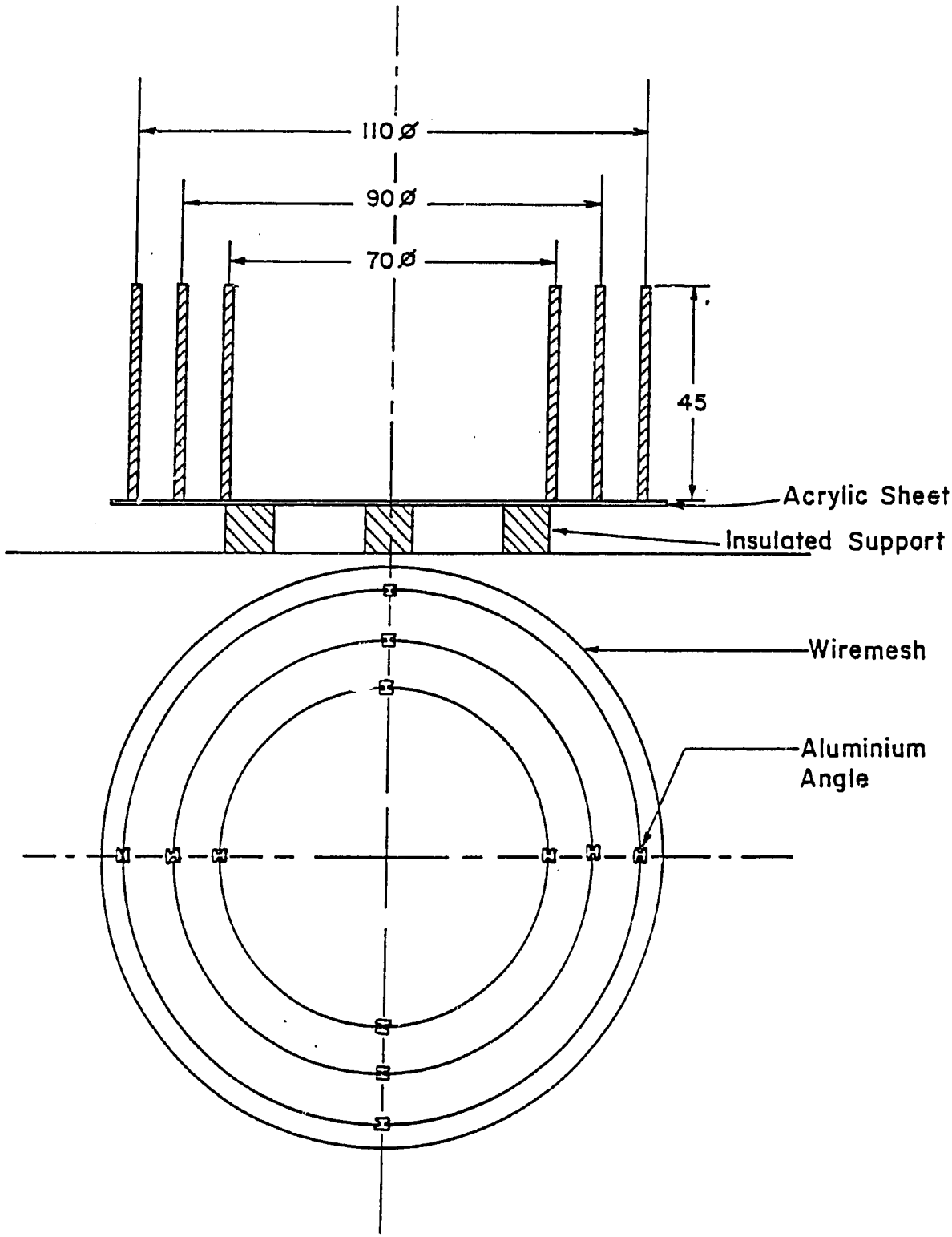

Fig. 2.2 Circular faraday cage

2.2 Experimental Procedure

2.2.1 General

Experiments were conducted at liquid flowrates of 0.03, 0.06 and .09 l/min for various disc speeds. The applied voltage to the induction electrode was varied between 0.5 to 1.5 kV to determine the effects of disc speed and liquid flowrate on charge to mass ratios. The applied voltage to the electrode was kept at 1.5 kV for the deposition measurements under various disc speeds and flow rates. The disc speed was varied from 2000 to 5000 rpm in steps of 1000 rpm.

The spray liquid used was deionized water plus 2 g/l of a fluorescent tracer (Fluorescein Sodium). Standard solvent solution (2 percent ethanol) was used to wash off the tracer from the targets.

2.2.2 Charge to Mass Ratio

Tests were conducted to study the effect of applied electrode voltage, disc speed and flow rate on charge to mass ratio of the sprayer. The charging voltage was measured using Keithley High Voltage Probe. The charge carried by the spray droplets was measured by measuring the spray cloud current using Keithley electrometer Model 614. The charge to mass ratio was determined by dividing the spray cloud current by the mass rate of the liquid.

2.2.3 Spray Deposition

Tests were carried out to determine the deposition efficiency of the proposed system without charge. Test runs were made at various disc speeds and flow rates and each test run had four passes to get better deposition results. After spraying, the spray deposits were allowed to dry before target removal. Standard solvent solution was used to wash off the deposits from each target and the absorbance of the solution was measured with a spectro-photometer at a wave length of 420 nm. The fluorescent tracer deposition was then measured using the formula,

$$\text{Tracer Deposit ng/ sq. cm} = C_1 \; A \; V_c$$

where A is the absorbance relating to 420 nm,

V_c is the volume of the deposit solution collected (or extracted using the solvent) in ml.

C_1 is the deposition coefficient, and equals to 30.637

The deposition efficiency can be calculated using the formula,

$$\text{Deposition efficiency } \% = \frac{C_2 \quad A\ v}{Yf^1 nL}$$

where f^1 is the liquid flow rate used in l/s and C_2 is the color factor, and is equal to 0.000588 for orange yellow. Y is the initial concentration of the fluorescent tracer in the spray liquid in g/l. L the distance covered in one pass where n is the number of passes the sprayer has travelled for a test run. v is the forward velocity of the sprayer carrying frame in m/s.

2.3 Results and Discussions

2.3.1 General

For a fixed electrode gap, the charge to mass ratio is proportional to voltage, disc speed and flow rate. Figures 2.3-2.6 show that q/m increases with the applied electrode voltage within the applied electrode voltage limit. Also in all the cases, the increase in flow rate was observed to result in an increase in the charge to mass ratio. (Gupta et al 1989)

The variation of charge to mass ratio per unit voltage applied is relatively small over the range of experiments with respect to the flow rate. The relationship between the (q/m)/V and the disc speed is given by

$$\frac{[q/m]}{V} = -1.36 \times 10^{-9}\ w$$

where w is in rad/s.

From the above relation the charge to mass ratio of the proposed spinning disc sprayer can be derived as,

$$\frac{q}{m} = -1.36 \times 10^{-9}\ Vw$$

where V is in kilo volts.

for the flow rates between 0.5 g/s and 1.5 g/s and the disc speeds between 2000 and 5000 rpm.

2.3.2 Spray Deposition Efficiency

The effect of disc speed on spray depostion efficiency for various flow rates is shown in Fig. 2.7. The deposition efficiency of uncharged spray at a flow rate of 1.5 g/s was determined and compared with the deposition efficiencies of charged spray at various disc speeds and flow rates. An increase in flow rate increased the deposition efficiency, but

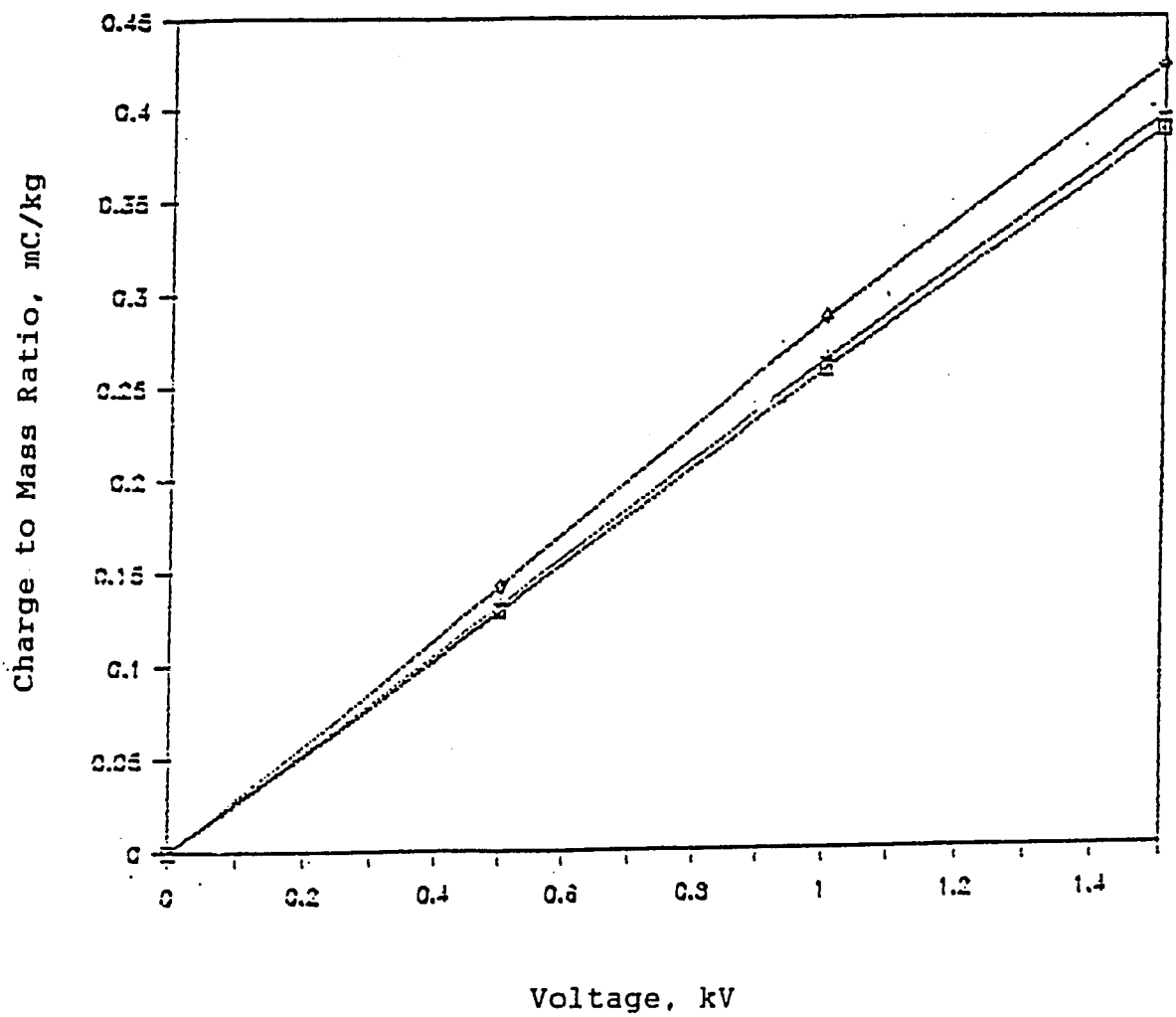

□ 0.03 l/min + 0.06 l/min ◊ 0.09 l/min

Fig. 2.3 Effect of voltage on charge to mass ratio for a disc speed of 2000 rpm

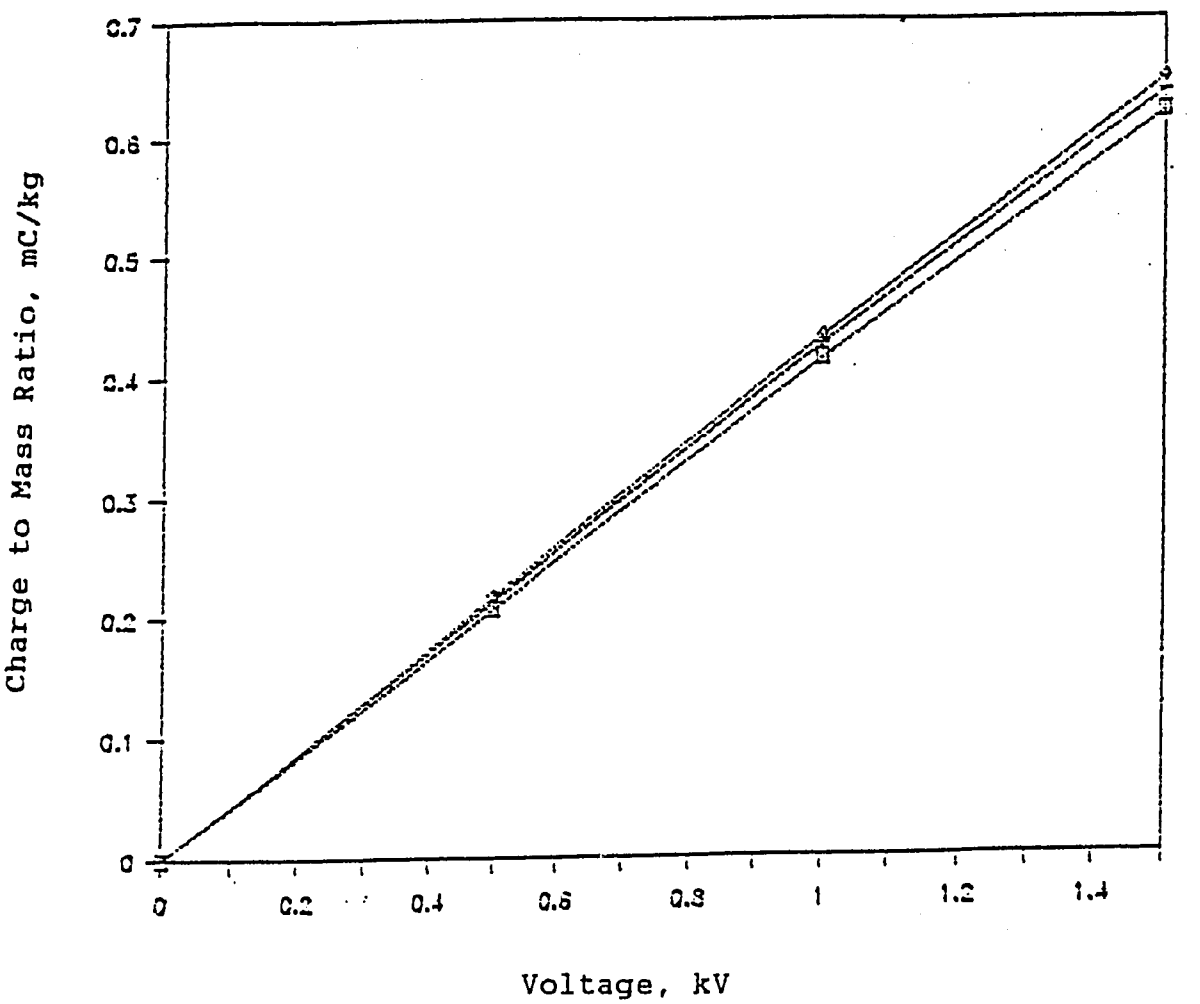

□ 0.03 l/min ÷ 0.06 l/min ◊ 0.09 l/min

Fig. 2.4 Effect of voltage on charge to mass ratio for a disc speed of 3000 rpm

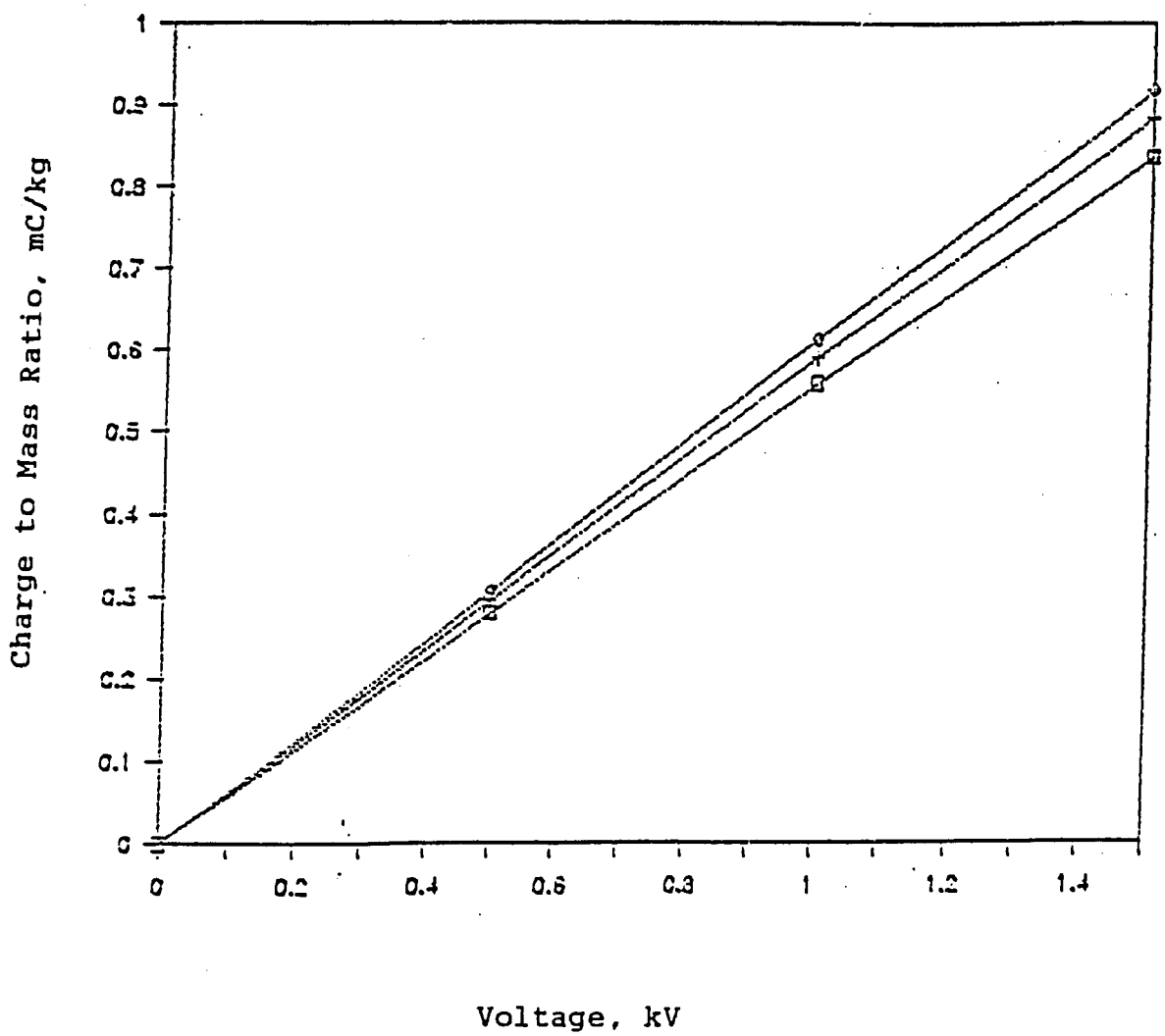

□ 0.03 l/min +0.06 l/min ◇0.09 l/min

Fig. 2.5 Effect of voltage on charge to mass ratio for a disc speed of 4000 rpm

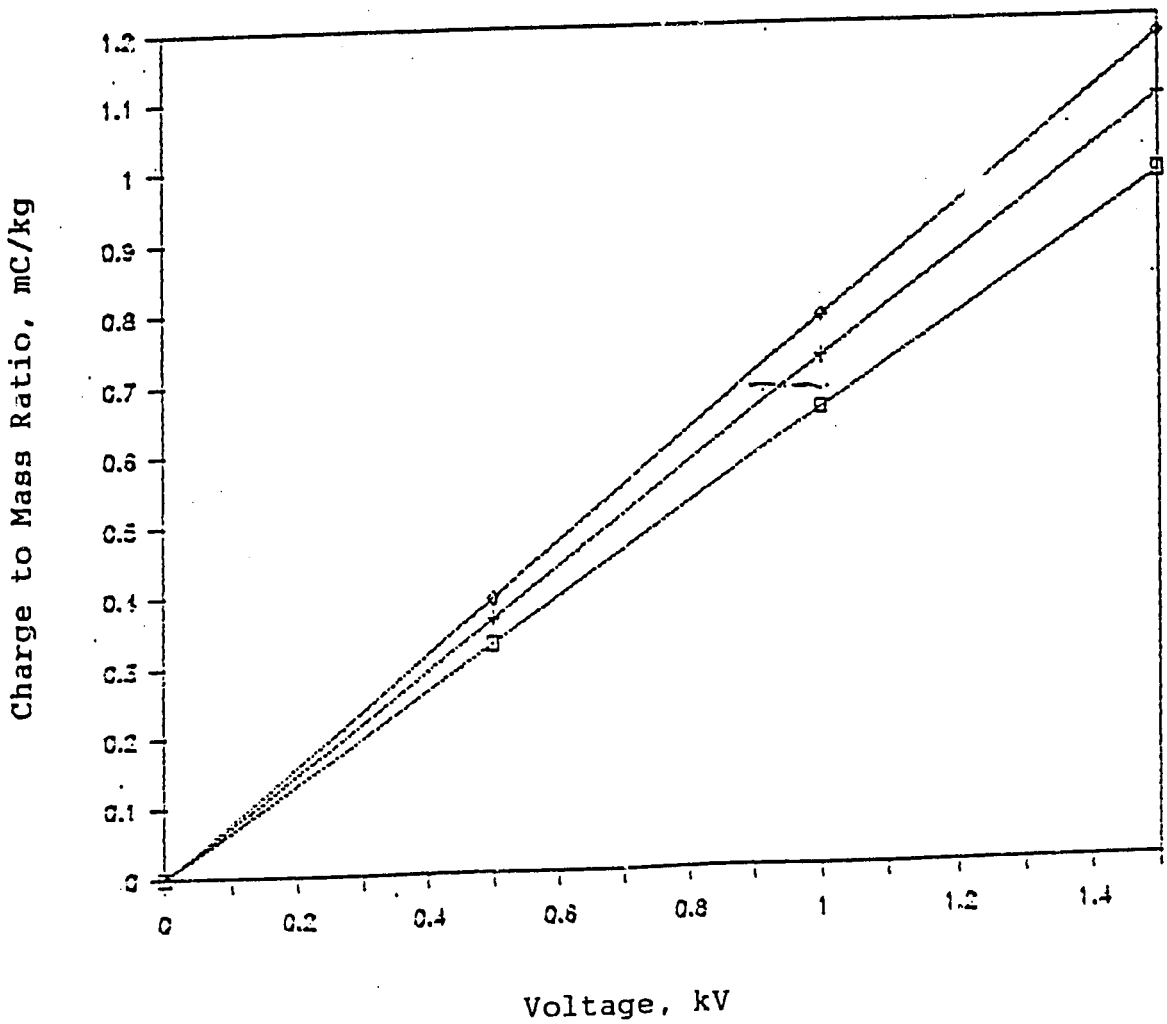

□ 0.03 l/min + 0.06 l/min ◇ 0.09 l/min

Fig. 2.6 Effect of voltage on charge to mass ratio for a disc speed of 5000 rpm

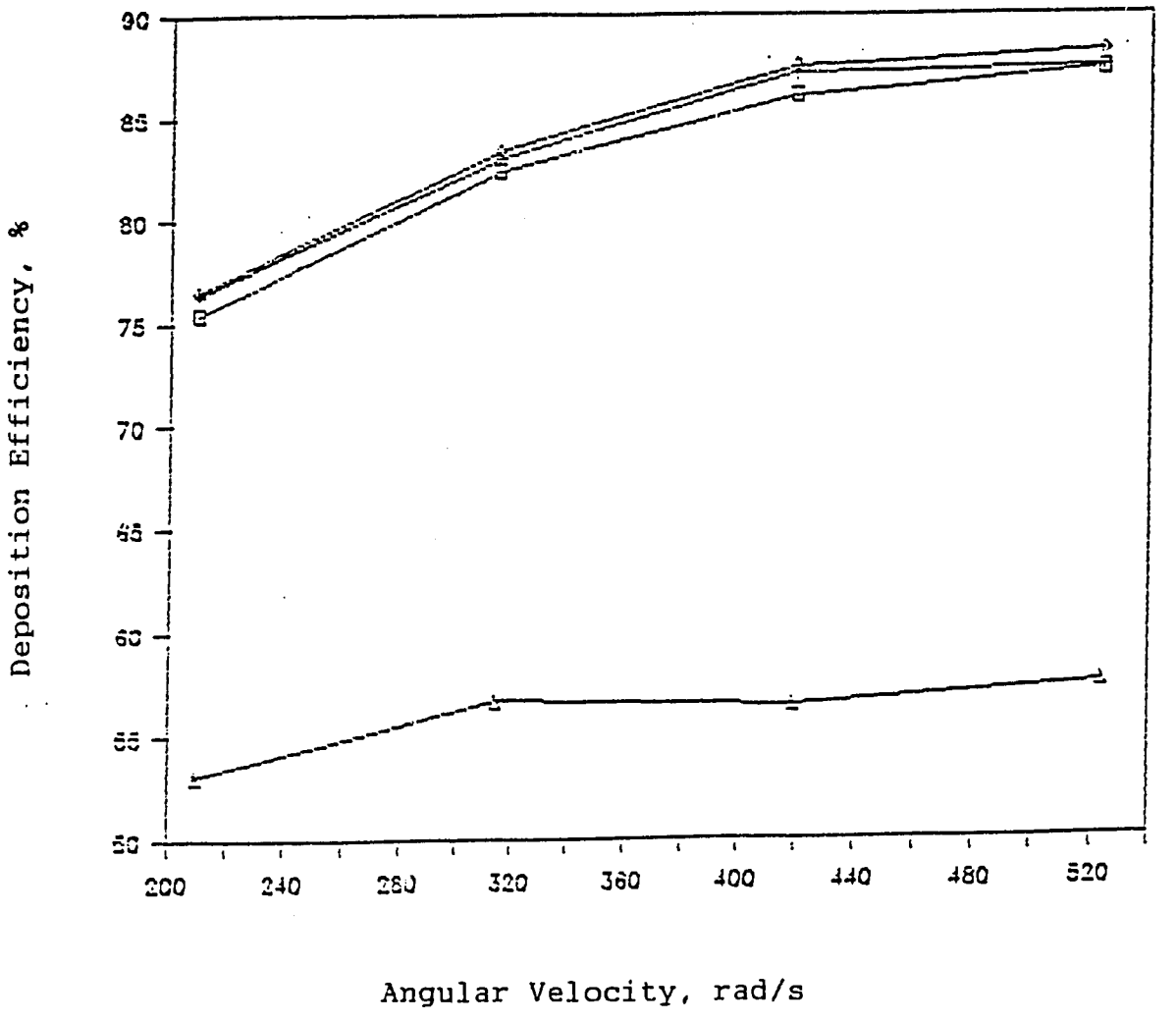

Fig. 2.7 Effect of disc speed on deposition efficiency for various flow rates

As charge to mass ratio is in linear relationship with the disc speed, the increase of the charge to mass ratio (Fig. 2.8) increases the spray deposition. But the incremental change in deposition is small with an increase in charge to mass ratio.

The effect of charge to mass ratio on the deposition of the fluorescent tracer material over the target plates for different flow rates is shown in the Fig. 2.9. The trend is almost linear for low flow rates and an increasing trend was observed with increased liquid flow rate. A two-fold increase in deposition was observed at higher charge to mass ratios.

2.4 Conclusions

1) The proposed model for producing a charged water based spray using spinning disc sprayer has been proven technically feasible.

2) Short circuiting of the power supply by wetting of the induction electrode was not observed as the induction electrode rotates with spinning disc.

3) The charge to mass ratio varies linearly with the disc speed and the applied electrode voltage and not very much with the flow rate within the tested experimental parameters. The charge to mass ratio can be predicted using the formula,

$$\frac{q}{m} = -1.36\ 10^{-9}\ Vw$$

4) The spray deposition efficiency increased with disc speed considerably and so with the charge to mass ratio. The increase in the deposition efficiency with flow rate is small.

5) The deposition of the fluorescent tracer is affected by charge to mass ratio and the liquid flow rate.

6) When compared to uncharged spraying upto a two fold increase in deposition was observed with a charged spray.

7) The power requirement of the proposed sprayer is very low as it can run continuously for 30 hours with four D size dry cells.

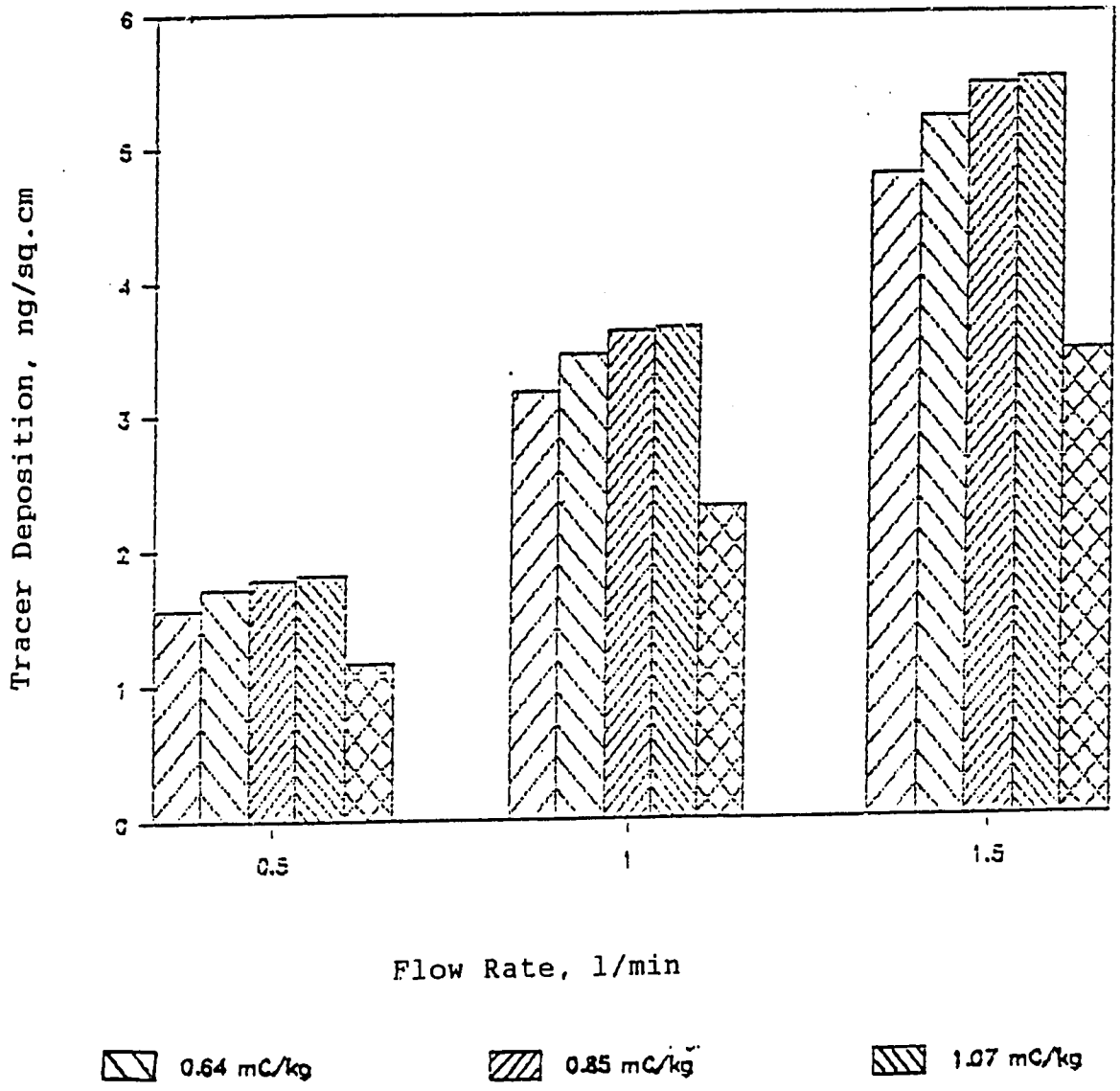

Fig. 2.8 Effect of Charge to mass ratio on deposition

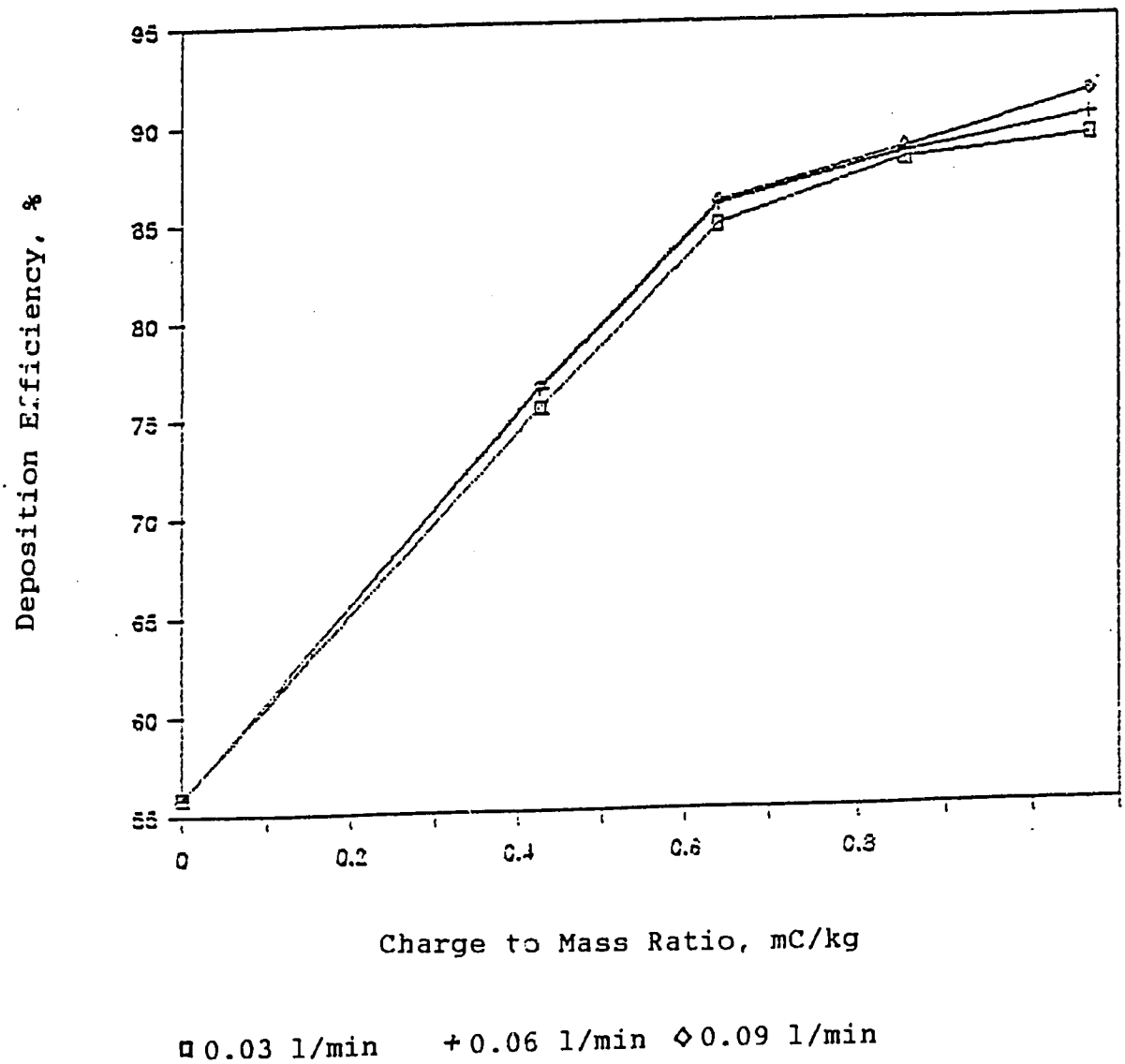

Fig. 2.9 Effect of flowrate of spray liquid on tracer deposition for various charge to mass ratio

3 Design of Electrostatic Sprayer Using Contact Charging

3.1 General

To develop a hand held electrostatic sprayer using contact charging of spray chemicals is one of the objectives of the project. It has been reported that spray liquids of water based chemicals can be advantageously charged by directly connecting the high voltage source to the nozzle. A contact charging system was designed for a hand held spinning disc sprayer for charging the spray droplets.

3.2 Materials

The spinning disc and the driving motor of an ASPEE CDA sprayer, made in India were used in the development of the prototype. The motor rotates at a speed of 5500 r.p.m when energised by 4 dry cell batteries.

The high voltage source used is model C-30 power supply manufactured by Venus Scientific Inc, USA. It operates on variable input of range 5-12 V d.c and gives an output of 1000-3000 V d.c. Maximum output current at 3000 V is 500 μ A.

Four dry cell "D" size batteries were used to give an input of 6 volts to the power supply and the d.c. motor. The sprayer can give a continuos operation of 30 hours with these batteries.

The electrode is a coupling made of aluminium mounted in the passage line of spray liquid from the tank.

3.3 Design

The features of the sprayer designed are shown in the Fig. 3.1. High voltage is applied to the liquid through an aluminium coupling placed in the flow path of the liquid from the tank to the atomising disc. High tension supply to the coupler is through a screw insulated by a PVC collar. The coupling is well insulated by a polypropylene collar.

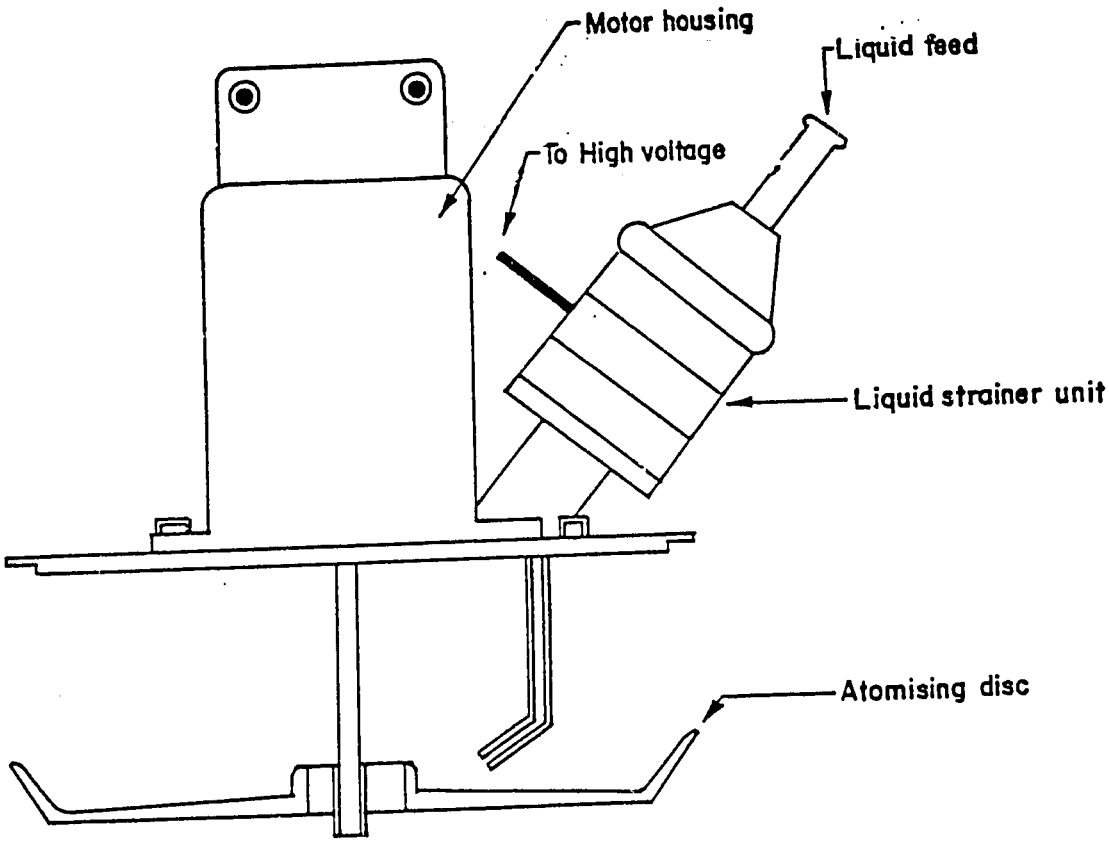

Fig. 3.1 Schematic diagram of the electrostatic sprayer using contact charging

4 Development of a High Voltage Circuit

4.1 General

Studies on Corona charging and contact charging on sprays require the use of high voltage generators of varying ranges, most often exceeding 25 kV. Developing a technology for high voltage generators for electrostatic spray requirements is very essential since buying the high voltage generators from the developed countries is not only costly but it also entails the inconvenience of using components which are not locally available. A high voltage circuit of output 15-20 kV was developed using the locally available materials and technology.

4.2 Development of Charging Circuit

A high voltage d.c. output of the order of 15-20 kV with a field strength sufficient to produce the desired atomisation of spray droplets when applied in induction charging method was the primary requirement in the design of charging circuit. The circuit for the prototype sprayer was to be operated on four dry cells of (1.5 V each) 6 V. For laboratory testing, a circuit which delivers 15-20 kV d.c for a supply input of 230 V a.c. was used (Ganapathy 1989). The block diagram for the voltage generator is given in Fig. 4.1.

4.2.1 Rectifier unit

A step down transformer of rating 230/12 V, supplies 12 V input to the rectifier and filter unit. The rectifier is a full wave bridge rectifier made of 4 solid stage diodes IN4001. A capacitor of rating 2200 µF serves as a filter.

4.2.2 Regulator unit

The regulator used is LM 317 whose function is to give a stable output of 1.2-5 V for an input of 9 V against any variations in the load.

4.2.3 Inverter

The function of the inverter is to convert the d.c output supplied by the regulator to a.c at desired frequencies and current rates. It consists of an I.C 555 astable oscillator and a set of BD 139 transistors connected to the secondaries of a center tapped transformer of rating primary 5-0-5 V secondary 0-1 kV.

4.2.4 Multiplier

It consists of cascaded stages of half-wave doubler. The output of the transformer is supplied to a specific number of cascades depending on the stage of development of the circuit. In each stage of the rectifier and filter, the voltage is added to give the final output in kVs. For an output voltage of Vpeak,

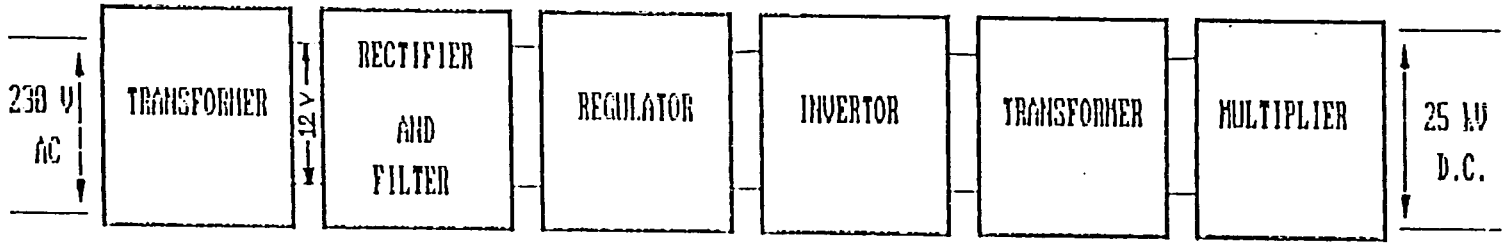

Fig. 4.1 Block diagram of high voltage generator

each cascade gets charged to 2 V. This reduces the entire multiplier unit into a set of batteries of 2 V connected in series, delivering final output in kV.

5 Performance Evaluation of Sprayers

In this study five different sprayers, namely, Lever operated, Compression, Motorised knapsack mist blower, Spinning disc sprayer and Electrostatic sprayer were considered for evaluation. Diameter of spray droplets, their density on target and spray deposition are the parameters used to evaluate the performance of the sprayers.

5.1 Materials and Methods

Laboratory tests were conducted with the aid of a field simulator which consists of spray tool carrying frame, motor and cable arrangement, target and target table.

Droplets were collected in slides coated with Magnesium Oxide. These slides were later analysed under droplet analyser for the droplet size and density.

Fluorescent tracer solution and spectrophoto meter were used in the measurement of spray deposition.

Field tests were conducted in six treatments with three replications. These treatments were no spray for controlled plot, spray using lever operated knapsack sprayer, compression sprayer, motorised knapsack mist blower, spinning disc sprayer and electrostatic sprayer.

5.2 Results and Discussion

Laboratory tests indicated that motorised knapsack mist blower, spinning disc and electrostatic sprayer produced a mist spray, while lever operated and compression knapsack sprayer produced a fine spray.

Electrostatic sprayer gave the highest droplet density on the front and back side of MgO coated slide.

The deposition efficiency of lever operated, compression, motorised knapsack mist blower, spinning disc and electrostatic sprayer were 31 %, 34%, 52 %, 66 %, and 76% respectively.

In the first treatment of field test, electrostatic, spinning disc and lever operated knapsack sprayer gave better rice leaf folder control than that of two other sprayers. Half-rate electrostatic treatment provided slightly better insect control than the full rate applied conventionally. In the second teatmnent no significant differences in the level of insect control were detected among all the sprayers. However the damaged leaves on treated plot are significantly different from that of

untreated plot i.e. control.

5.3 Conclusions

In field tests, no significant differences in levels of insect control were detected among all the spryers tested. But the electrostatic sprayer needed only half the amount used for conventional sprayers. (Hadi 1989)

6 Procurement of Keithley Electrometer

A versatile Keithley Electrometer was purchased to measure charges, current flow, high voltage and resistances.

7 Targets

To study the effect of target factors such as leaf geometry, orientation and leaf area on the electrostatic deposition, artificial plant targets were made from plastic. Special coating of target surface with conducting graphite was done to study the effect of spray deposition on the conductivities of the target surface.

8 Visit by Prof S.E. Law

Prof. S.E. Law, consultant to the project, visited AIT during September 8-11, 1989 and reveiwed the developments of the project. He gave emphasis on determining and controlling the target factors that influence profoundly the electrostatic deposition of sprays. He pointed out that rebounding of drops from the target surface and corona discharge associated with the sharp pointed leaves of the cereal crops are the major areas contributing to the errors in the determination of charge to mass ratio. He recommended that plastic plants of the required geometry coated with conducting graphite could be used as targets in the experiments to determine the above mentioned parameters. He also suggested that nickel or silver painting of the electrode could improve the charge induction.

9 Visit by Prof. C.P.Gupta

Prof. C.P. Gupta, principal investigator of the project, visited India to consult with the experts in high voltage engineering from Indian Institute of Technology, Kharagpur and Delhi in the design of high voltage circuits.

10 Plan for Future Work

The hand held electrostatic sprayer using contact charging system will be evaluated for its performance under various operating parameters. A sprayer unit for corona charging also will be designed and tested. The target factors and their influence on electrostatic deposition will be carefully studied. Comparative performance evaluation of all the three types of sprayers will be carried out.

REFERENCES

Ganapathy S. 1989. Development of an electrostatic sprayer. Unpublished thesis. Asian Institute of Technology. 1989.

Gupta C.P., G. Singh, M. Parameswarakumar. 1989. Charging system for hand-held electrostatic spinning disc sprayer. ASAE paper no. 89-5011.

Hadi Suryanto. 1989. A computer program for insecticide application to rice crop. Unpublished thesis. Asian Institute of Technology. 1989.

Marchant J.A. 1985. An electrostatic spinning disc atomiser. Trans. ASAE, 28(2): 386-392

Law E.S., S.C. Cooper. 1987. Induction charging characteristics of conductivity enhanced vegetable-oil sprays. Trans. of ASAE 30(1): 75-79.