PN-ABM-232

ENERGY EFFICIENCY AUDIT REPORT
EESTI FOSFORIIT CHEMICAL PLANT
MAARMO, ESTONIA

JULY 1992

PREPARED BY: RCG/HAGLER, BAILLY, INC.
1530 Wilson Boulevard
Suite 900
Arlington, VA 22209
(703) 351-0300

ENPRO ENGINEERS BUREAU LTD.
Sitsi 20/22 - 33
200004 Tallinn, Estonia
(70142) 45 03 03

and

TALLINN TECHNICAL UNIVERSITY
Ehitajate tee 5
200108 Tallinn Estonia
(70142) 47 40 95

U.S. EMERGENCY ENERGY PROGRAM FOR EASTERN AND CENTRAL EUROPE

U.S. AGENCY FOR INTERNATIONAL DEVELOPMENT
BUREAU FOR EUROPE
OFFICE OF DEVELOPMENT RESOURCES
ENERGY & INFRASTRUCTURE DIVISION
WASHINGTON, D.C. 20523

USAID Contract EUR-0015-C-00-1007-00

DISCLAIMER

The contents of this report are offered as guidance. RCG/Hagler, Bailly, Inc., Enpro Engineers Bureau Ltd. and the United States Agency for International Development, and all technical sources referenced in this report do not (a) make any warranty or representation, express or implied, with respect to the accuracy, completeness, or usefulness of the information, apparatus, method, or process disclosed in this report may not infringe upon privately owned rights; (b) assume any liabilities with respect to the use of, or for damages resulting from, any information, apparatus, method or process disclosed in this report. This report does not reflect official views or policies of the above named institutions. Mention of trade names or commercial products does not constitute endorsement or recommendation for exclusive use.

QUALITY ASSURANCE STATEMENTS

The contents of this report include recommendations based on data provided by the client plant, measurements made on site, calculations, and engineering judgement. The conclusions reached were based on a limited engagement of only about one week's duration in the plant, and not an exhaustive engineering analysis. RCG/Hagler, Bailly, Inc. certifies that this report conforms to the level of best commercial practice for industrial energy audits of similar level of effort, as conducted in the United States. This report has been prepared under the guidance of a registered Professional Engineer, licensed to practice in the United States.

TABLE OF CONTENTS

PAGE #

I. ACKNOWLEDGEMENTS 1

II. EXECUTIVE SUMMARY 2

III. INTRODUCTION 5

3.1. BACKGROUND 5
3.2. PLANT DESCRIPTION 6

IV. ENERGY USE ANALYSIS 7

4.1. ENERGY USE 7
4.2. STEAM/HOT WATER SYSTEMS 8

V. PREVIOUS ACTIVITIES IN ENERGY CONSERVATION 10

VI. RECOMMENDATIONS FOR ENERGY EFFICIENCY IMPROVEMENT 12

6.1. LOW COST, SHORT TERM IMPROVEMENTS 12
6.2. GENERAL AND ENERGY MANAGEMENT IMPROVEMENTS 17
6.3. IMPROVEMENT FROM USAID FINANCED EQUIPMENT PURCHASE 24
6.4. IMPROVEMENTS REQUIRING MAJOR CAPITAL INVESTMENTS 27

APPENDIX I: GRAPHICAL PRESENTATION OF ENERGY DATA 29

A. EESTI FOSFORIIT STEAM SYSTEM SKETCH
B. DISTRICT HEATING MONITORING BASIS
C. SUPERPHOSPHATE, ENERGY VS. PRODUCTION
D. SUPERPHOSPHATE ENERGY INTENSITY
E. SUPERPHOSPHATE PRODUCTION
F. STEAM FROM "IRU"

FINAL ENERGY AUDIT
EESTI FOSFORIIT CHEMICAL PLANT
MAARDU, ESTONIA

I. ACKNOWLEDGEMENTS:

USAID, EnPro Engineers Bureau and RCG/Hagler, Bailly, Inc. gratefully acknowledge the assistance, and cooperation shown by USAID, Tallinn, Tallinn Technological University (TTU). We also gratefully acknowledge the personalized assistance and cooperation of the following Eesti Fosforiit individuals:

Mr. P.Nikopensius	- Chief engineer
Mr. V.Skorobogatov	- head of research
Mr. V.Mamakin	- chief energy manager
Mr. Rumyantsev	- deputy chief energy manager
Mr. B.Yantchilin	- chief of boilerhouse
Ms. Kruglova	- engineer from energy department
Ms. Katovic	- head of planning and economics department

The RCG/Hagler, Bailly team for the preliminary audit consisted of:

Mr. E.S. Maal	- Team Leader
Mr. B.G. Tunnah	- Senior Engineer

II. EXECUTIVE SUMMARY

A team of engineers from RCG/Hagler, Bailly, Inc. and EnPro Engineers Bureau Ltd., carried out site activities at Eesti Fosforiit Chemical Plant from Nov 27-30, 1991 to work together with Eesti Fosforiit staff to identify and implement improvements to energy efficiency.

RCG/HB has based it's work on consumption in 1989 and 1990 and energy prices in US $. This has been done due to the severe devaluation of the Estonian/Russian RUBLE at the time of the visit and the fact that Estonia will have to pay "world, free economy" prices for fuels.

Based on 1989 and 1990 figures, RCG/HB estimates total yearly energy costs for 1992 at Eesti Fosforiit as:

EESTI-FOSFORIIT

Yearly Electricity use in MWh	22,350	
Yearly Fuel use in Tons of Mazout	439	
Yearly TOTAL Natural Gas use in GJ	1,221,000	
Yearly BOILERS Natural Gas use in GJ	606,197	
Yearly Grnd Superphos Natural Gas use in GJ	610,658	
Yearly value of Elect. at US$ 50.00/Mwh	$1,117,500	23.23%
Yearly value of Mazout at US$ 70.00/Tn	$30,730	0.64%
Yearly value of TOT Nat Gas at US $3/GJ	$3,663,000	76.13%
Yearly value of Blrs Nat Gas at US $3/GJ	$1,818,591	37.80%
Yearly value of Grnd Superphos Nat Gas at US $3/GJ	$1,831,973	38.08%

The bases for energy savings, which cannot always be considered additive, are estimated as follows:

7-20%	LOW COST, SHORT TERM IMPROVEMENTS
3-10%	GENERAL AND ENERGY MANAGEMENT IMPROVEMENTS
2-8.5%	IMPROVEMENTS REQUIRING MAJOR CAPITAL INVESTMENTS

From these potential savings figures, RCG/Hagler, Bailly conservatively estimates the total potential for energy efficiency improvement without process changes, at Eesti Fosforiit as 10-25%.

The potential savings figures shown for LOW COST, SHORT TERM and GENERAL AND ENERGY MANAGEMENT IMPROVEMENTS do reflect the importance and potential of these modifications, which Eesti Fosforiit can and should start to implement immediately.

As a result of the survey performed, the RCG/Hagler, Bailly team recommends purchase of the equipment required to implement the energy efficiency projects listed below. Eesti Fosforiit has agreed to pay for installation and other costs necessary to implement the recommended projects and to make full use of any equipment to be supplied by USAID. The details for the recommended USAID financed equipment purchases are:

ECO F-1: Energy and Production Management Computers

TOTAL COST	YEARLY SAVINGS	SIMPLE PAYBACK
$6,000	$48,112	0.1

Personal Computers (2) with software

ECO F-2: Portable Efficiency Monitoring Instruments

TOTAL COST	YEARLY SAVINGS	SIMPLE PAYBACK
$11,500	$96,225	0.1

Electronic Combustion Gas Analyzer
FLUKE Temperature Indicator & probes
Electronic, Total Dissolved Solids meter
Infra-red pyrometer
Ultrasonic Steam Trap Tester
Electric Survey Meter

ECO F-3: Fixed Meters for Natural Gas

	TOTAL COST	YEARLY SAVINGS	SIMPLE PAYBACK
ECO F-3	$9,000	$36,630	0.2

Natural Gas flow meters for:Boilerhouse total, Superphosphate Granulation and Steam boilers

The total estimated cost for the recommended USAID financed equipment purchases is $26,500 and the expected yearly savings are $180,967, with a simple payback of approximately 0.2 years. The yearly savings resulting from the USAID equipment are approximately 3.5% of total energy costs.

III. INTRODUCTION

3.1. Background

In 1990 the process of reforming economic system in Estonia started the transition period to market economy. Eesti Fosforiit (EF) decided to start with the stepwise reorganization of the company's structure. Many new smaller companies were started using existing buildings, equipment and technical infrastructure, while combining the ideas of top level managers with private initiative from department and workshops managers.

Eesti Fosforiit now exists as a state enterprise and has it's own staff of 1,600, together with the partially owned stock companies the total staff is approximately 2,200. The permanent re-organization into a state owned stock company is currently under discussion in the government and in Ministry of Industry and Energy. In the more distant future there are plans to establish a kind of association or concern or holding company. Connections between EF and its' small firms are very close - they have common networks for supply of electricity, natural gas and process water; system of waste water; railway lines, etc. Cooperation between EF and these numerous stock companies is supported by various EF top level managers - members of board of directors of stock companies.

Among the STOCK companies formed were:

LIK (51% of stock owned by EF, one partner from Russia). Products - paints, paint pastes. LIK purchases electricity and heat from (EF).

ESFILL (Estonian Filler) (51% EF). Joint company of 7 partners, one of them from Russia. Product - special fine (40 micron) carbonate filler (more than 92% of $CaCO_3$) for rubber and paint industries. Planned production - 50 thousand t per year.

Marmor (51% EF, some stockholders are private persons from EF). Product - crushed limestone.

Naritse (51% EF, many private stockholders). Product - fixer/fixative lotions for cosmetic treatment of hair. Raw material from Estonia.

Esimer (51% EF, 4 partners incl. 3 from Russia). Product, mother-of-pearl paint pigments, talcum. Raw material and process technology from Russia.

STIVO	"Cooperative enterprise" involved in civil engineering, construction of dwelling houses, industrial structures and large reconstruction projects.
Alma	another cooperative enterprise involved in civil engineering, manufacturing construction elements, repair work.
Korund	(EF more than 50%). Special coatings/platings (Zn, plastic polymers) for metal elements, treatment of metal surfaces with special equipment using plasma, manufacturing this kind of equipment.
CIOSIL	(EF+firm from Moscow 51%, two Yugoslavian firms 49%). Product - cyolite - alumina silicate. One third of raw materials from EF. Planned start-up in the end of 1991.

3.2. Plant Description

The facilities at the Eesti Fosforiit plant consist of the process plant itself and supporting utilities systems. The processing equipment is mainly for phosphorous-based fertilizers but other equipment is being introduced for producing other mineral products, paints and pigments as the company diversifies. The utilities systems are as follows:

(1) Electricity	purchased from the grid, no self generation
(2) Water	pumped from own artesian wells
(3) Steam	generated in two boilers (capacities 25 t/h and 10 t/h, 13 bar sat steam), supplemented by purchased steam at 10 bar from the Iru cogeneration plant
(4) Hot water	produced in 2 boilers (each 30 Gcal/hr) and applied, via circulation systems, for space heating some plant workshops and the nearby town of Maardu, and as domestic water in the plant and Maardu.
(5) Fuel	almost exclusively natural gas, but some heavy fuel oil used for process unit start up, e.g. drying kilns
(6) Air	provided from own air compressors

IV. ENERGY USE ANALYSIS

4.1. Energy Use

Energy has never been a major factor in plant costs and thus has received relatively little attention. At the present time, energy costs are still quite low and energy (in the form of fuels, steam and hot water) represents only about 8 percent of the total manufacturing expenses. This situation is likely to change soon, as Estonia will have to pay hard currency for imported energy supplies such as fuel oils and natural gas, which will no doubt be priced at -- or close to -- world "free market" prices. The focus of work at this plant was therefore to identify areas where thermal energy could be saved, particularly through low cost actions giving short term results.

For the largest non-steam, energy user, GRANULATED SUPERPHOSPHATE, graphs of seasonal specific energy consumption (Appendix D) and seasonal SUPERPHOSPHATE production (Appendix E) were drawn. The direct relationship between consumption and production is further graphically corroborated by the straight line seen on Appendix C. For a plant with good energy management, these graphs are usually a straight line, with more energy used for a higher level of production. While some of the departments at EF were able to provide graphs which were almost straight lines, the granulated superfosfate plant showed the "best" straight line and corresponding potential for energy savings through improved energy management. The other departments showed quite a large scatter, suggesting a lack of energy management and a lack of control on the amount of energy used.

Inaccurate meters can also play a part in producing scatter in the graphs, as can inappropriate allocations of energy use where actual energy consumptions are not known. However, experience suggests that these are more likely to show a steady bias (too high or too low) rather than scattering, which is more likely to be caused by actions such as:

Ineffective control of operational parameters
Running equipment when not necessary
Running equipment at less than optimum conditions
Producing product with variable specifications

In the time available, the water and steam systems were defined in detail and simplified drawings made, as these were not initially available in the plant. In addition, readings were taken around the steam and hot water boilers to estimate operating efficiencies. A visit was also made to the superphosphate granulation section to observe the gas-fired dryers, and a review of energy consumption data for several product lines was made.

4.2. Steam/Hot Water Systems

The plant collects and reports a great deal of data on production quantities and energy consumption but little analysis is performed. While the reliability of some of the data may be questioned, most meters appear to be working, and it is the "adjustment" of data and "allocation" of energy consumptions that needs to be reexamined in depth by the plant.

The plant should try to relate energy consumptions with production quantities and thus analyze operations in terms of energy efficiency. Although present reporting systems are not comprehensive and should be improved, some processing departments have their production and corresponding energy data reported each month.

Fresh water is obtained from artesian wells owned by the factory itself and the water is treated before passing to either the steam boiler or hot water systems.

There are two boilers for steam production: one has a capacity of 10 t/h and the other, recently renovated, of 25 t/h. Each is designed to produce saturated steam at 13 bar, although the actual operating pressure was 11.7 bar at the time of our visit. Both boilers are fitted with economizers.

The steam produced by the plant is supplemented by steam purchased from the nearby Iru cogeneration plant. Line capacity is limited to about 25 t/h which means that the phosphate plant has to produce some steam itself to meet demand, even though the boilers may then be operated at rather low rates (about 30 percent of nominal capacity during our visit).

Steam users are the various plant departments and will later include the new joint venture operations being set up. The steam users are:

"White soot" production (SiO_2), for process use and for space heating
Granulated superphosphate, for process use
Apatite storage, for space heating
Phosphate workshop, for space heating
Miscellaneous sales, for process use
Steam to the district heating system deaerator to heat water

Of all the users of steam, condensate is returned only from the "white soot" department. The amount is about 6-7 t/h, which represents under 15 percent of typical steam use. No condensate is returned to the Iru cogeneration plant.

There are two hot water boilers and two main user systems. One system supplies hot water to the nearby town of Maardu for domestic hot water and for space heating apartments. Some of the water users have heat exchangers and are "closed" systems while others draw off hot water directly ("open" systems). The other system supplies hot water to the plant area for space heating and for domestic hot water uses. The outlet temperature of the hot water boilers is set according to the climatic conditions and varies from about 80 degrees in summer to 150 degrees C in winter. Return temperatures are typically 60-70 degrees C.

A simplified drawing of the steam and hot water systems is given as Appendix A. Flow meters are indicated, showing that the systems are reasonably well metered. During our visit, most of the meters appeared to be working. Some average or typical flow rates and temperatures are shown in Appendix A.

V. PREVIOUS ACTIVITIES IN ENERGY CONSERVATION

Eesti Fosforiit although very interested in USAID's Energy Conservation program, was not actively involved in any self financed ENCON programs. However, when asked to submit a "wish/priority" list, they put considerable effort in preparing the following list:

QTY:	DESCRIPTION
4	Stack gas analyzers (CO, O_2) - (one for each boiler).
5	Steam flow rate meters
	2 for 25 t/h boiler
	- boiler-house (outlet)
	- for pipeline from Iru Plant (purchased steam)
	3 for 10 t/h boiler
	- for white soot workshop
	- for deaerator
	- for mazout preparation equipment
8	Hot water flow meters
	2 for 600 m^3/h hot water boilers
	- sold hot water to Maardu region
	- returned hot water;
	4 for 300 m^3/h hot water boiler
	- granulated superfosfate workshop - feed and return water;
	- mining workshop - feed and return water
	2 for 450 m^3/h hot water boilers
	- hot water boilers production
1	Water flow meter
	120 m^3/h for feed water of boilers
2	Steam flow meters
	16 t/h; 12 kg/cm^2
	- for steam boiler no. 2
	- for steam to process site.
2	Water flow meters
	120 m^3/h and 80 m^3/h for feed water.
3	Heat meters
	2, 30 Gcal/h for hot water boilers production
	45 Gcal/h for pipeline to Maardu region

1 Remote summing device of consumed power, max active power 22500 kV, max reactive power 6300 kVA
4 (Desktop) Personal computers
- boilerhouse - 1;
- planning and economics department - 1;
- energy department - 1;
- monitoring and control equipment department - 1.
1 Pressure transducer

When asked if they had some sort of "action or implementation plan" for putting the requested equipment in use, Eesti Fosforiit stated that they needed USAID technical assistance for this.

VI. RECOMMENDATIONS FOR ENERGY EFFICIENCY IMPROVEMENTS

Recommendations have been divided into four areas:

LOW COST, SHORT TERM IMPROVEMENTS
GENERAL AND ENERGY MANAGEMENT IMPROVEMENTS.
IMPROVEMENT FROM USAID FINANCED EQUIPMENT PURCHASES
IMPROVEMENTS REQUIRING MAJOR CAPITAL INVESTMENTS

The financial circumstances of the plant suggest that improvements in the first two categories should be undertaken as quickly as possible, concurrent with or before, those financed by USAID.

6.1. LOW COST AND SHORT TERM IMPROVEMENTS

6.1.1. Boiler combustion improvement

Current Conditions:

There is a problem with the control of the combustion air at low capacity utilization. This appears to apply both to the steam boilers and to the hot water boilers. At low loads, it seems impossible to reduce the air rates sufficiently to achieve optimum fuel/air ratios, and stack gas analyses showed undesirably high excess air. For example, with two burners operating out of three on one steam boiler to produce about 30 percent of the full steam capacity, the forced draft fan inlet louvres were shut completely (or at least as fully closed as physically possible) and yet the measured excess air rate was over 100 percent. Excess air on a hot water boiler was measured at 50 to 60 percent. For a well operated and well maintained gas fired unit, the excess air should be 20 percent or less.

From the readings taken and assuming a heat loss from the boiler structure of 1.5 percent at full capacity, the overall efficiency of the boiler was estimated to be 78.5 percent based on gross calorific value.

Similar readings were taken for the hot water boiler in operation. Also fired by natural gas, this was running with an inlet water temperature of 62 deg C and outlet 100 deg C. Again, the excess air was too high at about 50-60 percent. The stack gas temperature was 202 deg C. The estimated overall efficiency was 81.7 percent.

Recommended Action:

The plant should try to cut air flow using a variable speed drive or inlet dampers on the air fans. A drastic reduction of the excess air may be difficult to achieve with the existing equipment. In the long term, it may be necessary o replace the fans and to use smaller motors. A comprehensive study of the operating patterns of the steam boilers and hot water boilers needs to be made to see the amount of time these items are operated at or near full capacity.

Expected Results:

Some improvement could be made in the steam boilers, if the air rate could be cut to the level usually achievable in a modern gas-fired unit, 20 percent or less. The increase in efficiency would be about 2 percentage points, equivalent to a fuel saving of 2.5 percent.

Improvements for the hot water boilers could be obtained by reducing the excess air to 20 percent. Efficiency could be improved by 1.5 to 2 percentage points to give a fuel saving of 2.5 percent, much the same as for the steam boiler.

Both of these savings correspond to a total fuel cost savings of approximately 2%.

6.1.2. Boiler Blow-down control and monitoring Total Dissolved Solids (TDS)

Current Conditions:

Measurements of TDS in various water samples were made:

water from the deaerator to the boiler	690 ppm
water sample from the boiler blowdown line,approx.	8000 ppm
condensate	50 ppm

The boiler blowdown sample was noticeably dark in color. These results suggest that the present intermittent blowdown (said to be about 20 minutes per day) is insufficient. For a boiler operating at 10 to 13 bar, it is recommended that the TDS be kept below about 3500 ppm.

One of the steam boilers was operating at about one third capacity when readings were taken, utilizing 2 burners out of the three installed to produce 7.5 t/h of saturated steam

at 10.7 bar. The boiler is fitted with an economizer and the stack gas temperature was found to be very low at about 90 deg C. The fuel is natural gas and the fuel consumption is metered. Combustion gas analyses showed that the excess air rate was rather high at the time of the test. The combustion air fan had the inlet louvres closed as far as possible but excess air was around 100 percent (corresponding to a carbon dioxide level of 5.5 to 6 percent).

Water samples showed the boiler feed water to have 690 ppm total dissolved solids (TDS) while water from the steam drum has 8000 ppm. The actual blowdown rate is unknown: a rough calculation from water TDS figures suggests 0.7 t/h or 8.5 percent.

Recommended Action:

To maintain lower TDS figures in the boiler itself, obviously this rate needs to be increased (approximately doubled to achieve the level usually recommended, say 3500 ppm).

Expected Results:

Increasing the blowdown rate and improving the water quality will result in longer boiler life, less internal scale, improved internal heat transfer efficiency and other benefits difficult to quantify. Depending on the tradeoff with scale formation, increasing blowdown may lead to increased heat losses unless a heat recovery system is installed. A simple method would be to route the blowdown line through the boiler feed water tank in the form of a short coil or to use a small heat exchanger. In some well instrumented installations, where quantification is possible, a savings of 2-5% is attributed to this type of improvement, corresponding to a total fuel cost savings of 1-2%.

6.1.3. Combustion air intake location

Current Conditions:

The combustion air intake for the steam boiler is outside the boilerhouse, with the result that the combustion air temperature was measured at 8 deg C during our inspection. This may be compared to the air temperature for the hot water boiler (whose intake is located inside the boilerhouse) which was measured at 19 deg C at the same time. A higher combustion air temperature means a higher boiler efficiency (11 degrees higher giving say 0.5 percent higher).

Recommended Action:

It is therefore recommended that a duct be built from the outside fan into the building, as high up as possible to catch the hottest air possible. The intake for the other fan could also be extended to capture hotter air at a higher level inside the boilerhouse: a temperature of about 30 deg C was measured near the roof.

Expected Results:

The cost of extra ducting must be considered, of course, but hotter air (and higher boiler efficiency) can usually be achieved during the winter for a very low investment. This would effectively recover heat from the radiation loss of the boilers. As a rough guide, an increase in air temperature of 10 deg C should give an increase in boiler efficiency of 1/2 percent, corresponding to a total fuel cost savings of less than 0.5%.

6.1.4. District heating system "supply" control

Current Conditions:

The present control procedure for the district heating system is based on raising the water outlet temperature as the ambient temperature decreases, based on a standard graph. This standard is uniform throughout the USSR, and is not based on the Maardu physical system configuration.

Recommended Action:

Tests should be made by the plant with the water supply temperature set one or two degrees below the temperature suggested by the graph. The effectiveness of heat supply to the consumers should be monitored to determine the minimum practical temperature that can be maintained (and the graph amended if possible).

For the long term, the possibility of saving electrical energy by reducing the hot water circulation rate at times of moderate ambient temperature should be investigated. This would require motor speed controls on the circulation pumps (e.g. variable speed drives, invertors, frequency controls, etc).

Expected Results:

A total Natural Gas yearly savings of 3-10% corresponding to a total fuel cost savings of 2-8% is possible, in addition to a substantial potential for increasing revenues from users.

6.1.5. Superphosphate Granulation Section

Current Conditions:

The operation is basically to mix neutralized superphosphate powder with a controlled quantity of water and pass the materials through rotary granulators, in which the product tumbles along the rotating drum and granules are formed. The drums are open ended and much dust is formed which is lost to the atmosphere in the workshop itself. The water content of the granules at the outlet of the granulators is around 12 to 15 percent. Undersized particles are removed by screening and are returned to the granulators, while granules in the range of 1-6 mm are passed on to the rotary dryers in which their moisture content is reduced to less than 2 percent (the specification level).

Dust in the atmosphere is excessive and would not be permitted in US/European plants. There is no routine check on dust emissions from stacks discharging from the dryer outlets, although apparently emissions may be checked from time to time by the government environmental department. There are no checks by the plant on yields or losses in the system.

The plant is operated in accordance with historical instructions (which do not take throughput or capacity utilization into account) and no attempt to optimize conditions appears to be made by the plant.

A brief review of control procedures was made and records for the key parameters determining energy consumption -- the inlet and outlet (product) moisture contents -- were examined. The moisture contents at dryer inlets are determined by the workshop control laboratory once per shift and results are given to the operators. The guidance level for inlet moisture is 12-15 percent according to written instructions. Typical levels were in the range 12.5 to 13.0 percent (the highest seen was 13.5 and lowest 12.1).

The exhaust gas temperature at the dryer outlet is controlled at 85 to 90 deg C, according to instructions. The laboratory determines product moisture contents hourly and informs

the operators if results are too high or too low. Over the last two months, the lowest reading reported was 0.1 and highest 2.8 (although only 4 readings above 2.0 were seen) with the majority of readings in the range 1.0 to 1.6 percent. The averages for November were 1.2, 1.2, and 0.9 for the three dryers. Obviously this represents substantial giveaway on the specification limit of 2 percent, thus reducing the plant profit. In addition, these low values indicate excessive fuel consumption for drying the product far below the permitted level.

Recommended Action:

The entire drying operation needs a comprehensive evaluation to arrive at a method for and identify the equipment needs for the achievement of optimum conditions. This would possibly include pilot plant tests on samples of the superphosphate granules.

Expected Results:

Assuming that current moisture contents are 12.6% in and 1.2% out, thus for 100 kg of product, 13 kg water are removed. If the moisture content of the output is raised to 2%, then the amount of water to be removed per 100 kg of product becomes is reduced to 12.1 kg. This would result in an energy savings of about (13.0-12.1)/13.0 or 7 percent.

In general terms, therefore, it is quite likely that energy savings of 5 to 10 percent of the Natural Gas used for the Granulated Superphosphate, which corresponds to 4-8% of total fuel cost, could be achieved with better control and with little or no capital investment needed.

6.2. GENERAL AND ENERGY MANAGEMENT IMPROVEMENTS

6.2.1. Record keeping and performance monitoring of the processing operations

Current Conditions:

Energy has never been a major factor in plant costs and has received relatively little attention. At the present time, energy costs are still quite low and energy (in the form of fuels, steam and hot water) represents only about 8 percent of the total manufacturing expenses.

The plant collects and reports a great deal of data on production quantities and energy consumption but little analysis is performed. While the reliability of some of the data may be questioned, most meters appear to be working, and it is the "adjustment" of data and "allocation" of energy consumptions that needs to be reexamined in depth by the plant.

Present reporting systems are not comprehensive and should be improved, some processing departments have their production and corresponding energy data reported each month.

In fact, the steam and hot water systems appear to be well equipped with meters -- there are more working meters here than in many other plants. Many useful data are available but not enough analysis of these data is done.

Recommended Action:

RCG/HB recommends that Eesti Fosforiit establish a daily energy monitoring and management program. That collection and analysis of energy consumption data be done on at least a daily basis, and preferably on a shift by shift basis.

It is important to measure the actual performance of process and utilities equipment and record actual steam productions and consumptions, not adjusted figures based on fixed factors, design data or arbitrary allocations. Unless actual data are used, it is impossible to detect real changes in efficiency or to detect trends in equipment performance. Adjustments may be convenient for accounting purposes and for comparisons with annual plans but do not allow proper energy management to be carried out. Actual figures must also be used to establish a firm basis for quantifying present energy efficiency and levels of performance, from which the benefits of conservation measures can be calculated (and indeed measured over time).

The plant should therefore develop hot water and steam balances regularly as part of the procedure to monitor system performance. In addition to these balances, it is particularly recommended that the plant monitor the following parameters:

- Steam boiler efficiency, expressed as tonnes of steam per M^3 fuel gas consumed.
- Hot water boiler efficiency, expressed as Gcal output per M^3 fuel gas consumed.

- Specific energy consumption for all major products, expressed as total thermal energy per tonne (e.g. kilocalories of gas consumed plus hot water and steam, with process uses and space heating calculated separately).

- Specific electrical consumption for major products, calculated as kwh per tonne.

In addition to recording the figures calculated, the plant should plot graphs of energy use against production rate (thermal energy and electrical energy separately). These graphs should be used for routine monitoring of energy efficiency, as it is easy to spot unusually high or low points, to note the degree of scatter of the points, and to estimate the percentage of fixed energy use versus the variable (or production related) energy use. For the best results, all data should be monitored promptly after they become available, preferably at the end of each month, so that immediate action may be taken as required.

Expected Results:

The precise savings that can be achieved by establishing such a program are impossible to estimate accurately, but experience has shown that 1-5% reduction of energy costs have been achieved by other plants from their monitoring programs. In Estonia the rapidly rising energy prices should make Energy Monitoring and Management increasingly attractive.

Mention has already been made of the potential for energy saving through closer control of the moisture content of the granulated superphosphate leaving the rotary dryers, where savings of up to 10 percent are probably possible with no investment necessary.

6.2.2. Record keeping and performance monitoring of the district heating/hot water "supply, distribution and demand" operations

Current Conditions:

On the commercial side, data related to HEAT production, purchases, users and transmission losses are practically non-existent. HEAT consumption by users is not metered, invoicing is done according to "design" and/or "allocated" figures.

On the operational side, there are no "energy accounting" systems either for the boiler house or for the district heating system.

Recommended Action:

The district heating system should be subject to close monitoring to keep track of the energy supplied and relate this to the energy "needed" based on the climatic conditions. The plant should therefore keep the appropriate records and, at the end of each month, determine the cumulative energy inputs (Gcal) and cumulative degree days of heating based on ambient temperatures. The degree days may be calculated from ambient temperature data and by assuming a "base" ambient temperature below which heating is considered necessary (say 15 deg C).

The cumulative figures should be plotted on a graph: the slope gives the kilocalories provided per degree day (see
Appendix B). The energy input to district heating should be based on the total kilocalories in the hot water boiler output less the energy supplied as domestic water from open systems and less the energy in the circulating water return. Energy transferred for domestic water heating in the closed system through heat exchangers must be ignored as there are no data for calculations -- the load may be assumed constant in any case.

Expected results:

A total Natural Gas yearly savings of 1-5% corresponding to a total fuel cost savings of 1-4% is possible, in addition revenue increase.

6.2.3. Steam purchases and plant steam production

Current Conditions:

Eesti Fosforit presently purchases steam at 10 bar from IRU cogeneration plant. See seasonal variation in Steam purchased from Eesti Energia, IRU in Appendix F. Steam purchases are limited to a maximum of about 25 t/h by the capacity of the transfer line from Iru to Eesti Fosforiit. This limitation means that the plant boilers are often running well below capacity, i.e. about 25 to 30 percent of the rated output, which does not contribute to good energy efficiency and makes the correct combustion air rate difficult to maintain at the required low level.

Recommended Action:

The plant should calculate the cost of steam produced in its own boilers and compare this

with the cost of steam from the Iru plant and adjust operations to minimize the total cost of the steam utilized. A limit on fuel gas purchases restricts the production of steam by the plant itself and thus necessitates at least some purchases from the Iru cogeneration plant. In principle, steam produced in a cogeneration system should be made more efficiently than that in a conventional boiler and should therefore by available at reasonable cost, most likely below that of the steam produced in its own boilers.

Expected Results:

A total Steam self-generation reduction of 20% would provide cheaper steam from IRU. These yearly savings of Boiler Natural Gas are estimated as a total fuel cost reduction of approximately 0.5%.

6.2.4. General housekeeping and maintenance

Recommended Action:

A number of improvements are suggested here. For a start, efforts should be made to clean away dust and dirt inside the boilerhouse, and to remove broken brickwork and pieces of old piping and unused equipment. These contribute towards unsafe conditions in the poorly lit boilerhouse which would not be acceptable in most western countries. Cleaning the site and removing redundant equipment would be a good first step to improving working conditions and promoting an efficiency ethic.

All insulation of hot lines, inside and outside the boilerhouse, should be inspected and brought up to modern standards. Many sections of pipe insulation appear to be damaged, with the metallic sheeting on the outside distorted and probably letting rain soak into the fiberglass inside, thus destroying the insulating effect. Some lines carrying hot water or steam require insulation. For example, the boiler feed water line from the deaerator to the steam boilers appears mostly uninsulated. Throughout the boilerhouse, steam valves are uninsulated: significant heat could be saved by insulating valve bodies with clip-on fittings. In addition, the economizer tube bends are totally exposed.

In the process area, cleaning away excessive dust should be a priority to improve working conditions. If the working environment is difficult or dangerous, operators are unlikely to pay attention to energy efficiency. Consideration should be given to fitting rotating dryers and granulators with end covers to reduce the escape of dust. This would

contribute to reducing losses and thus indirectly to improving energy efficiency.

Expected Results:

An estimated 1-2% total fuel cost reduction can be achieved.

6.2.5. Steam traps and leaks repair.

Recommended Action:

RCG/HB recommends that the "plant" form a "steam team" to track down and repair steam leaks, inspect steam traps, inspect and repair steam line insulation, etc. The team should go systematically through the plant, recording the size and location of leaks repaired, the condition of traps and pipe lagging, the amount of condensate available from locations with no return lines, etc. The steam team's inventory will provide an excellent foundation for future analysis of conservation projects involving the steam system as well as providing the immediate benefit of significant energy conservation.

Expected Results:

An estimated 2-4% boiler fuel cost reduction which corresponds to a 0.7-1.4% total fuel cost reduction.

6.2.6. Boiler combustion optimization

Recommended Action:

The "plant" should modify boiler operating procedures to emphasize combustion efficiency as an operating parameter. Combustion efficiency measurements must be made in order to determine if the existing burners, control/supply systems for fuel and air as well as flue gas analyzing instrumentation are in good operating order. If they are either inoperative or non-existent, adequate equipment and/or instrumentation should be sized, designed, procured, installed, commissioned and the necessary training provided for the operating and maintenance personnel.

Once the appropriate equipment and instrumentation are in place, we recommend that the combustion air be regulated to give the minimum excess combustion air that can be

achieved without excess smoke production.

Expected results:

The credit for this ECO has already been taken in ECO F2.

6.2.7. Electric Motor Efficiency

RCG/Hagler, Bailly recommends that Eesti Fosforiit form an Electric Motor Efficiency Team. Personnel for this team should be drawn from Eesti Fosforiit staff, as this exercise should become a continuous part of plant operations and maintenance. The Electric Motor Efficiency Team would be responsible to survey motor load and efficiency, check and clean motors, replace underloaded motors, rewind or replace motors with excessive reactance, and develop a plan for introduction of high efficiency motors.

The Electric Motor Efficiency Team should have the following specific tasks:

Using portable volt-ammeter, power factor meter, carry out an electric motor load survey. The load (kW, kVAR, cos phi), voltage on each phase, and efficiency of all motors over about 10 kW should be checked using a systematic procedure.

Using a strip-chart demand recorder, carry out power demand survey (kW, kVAR, metered demand kW, and kWh/shift) for load centers over 100 kW. Based on this data, develop a power demand balance for the plant, under various operating conditions.

Based on the results of the power demand survey, work together with process personnel to investigate ways to reschedule operations to reduce peak demand and to shift consumption from peak to off-peak hours.

If motors with excessive reactance are identified, they should be taken out of service for rewinding or replacement, since kVAR charges paid by Eesti Fosforiit are substantial.

Institute a monthly policy of motor maintenance. Check that bearings are getting proper lubrication. Electrical connections should be checked and tightened if necessary. The housing and ventilation air intake on all motors should be cleaned to improve cooling and efficiency. Compressed air should be used to blow out dust and dirt from internal parts of the motor (air should be dry and less than 4 bar pressure to avoid damaging insulation). The motor and its drive system drive should be checked for proper

alignment, proper belt tension, and proper lubrication. Insulation should be tested with a megohmeter, and a log should be kept of these readings so that comparisons can be made from month-to-month. Check for excessive vibration.

As underloaded motors are identified by the survey, they should be changed for motors appropriately sized for the job. The inventory (developed above) should serve as the basis for moving motors from one location to another within the plant to match sizes to loads. If properly sized motors are available from spares or stocks, replacements of a given kW rating should prioritized on the basis of the possible efficiency improvement (degree of underloading and operating hours per year).

If phase-to-phase voltage imbalance is found (over 2%), then adjustments should be made to correct the problem. For every 2% variation in phase-to-phase voltage, a motor loses about 1% in efficiency. For the 0.4 kV system, the phase voltages should be equal within $\pm$ 5 volts, otherwise efficiency is reduced. Voltage imbalance can be caused by loose or corroded connections at bus bars, starter terminals, fuses, or the motor itself. If the problem is caused by single-phase loads which are attached one of the phases, these loads should be more equally distributed among the phases, or else the transformer should be retapped.

Expected results:

The credit for this ECO will be taken in 6.3.2. ECO F-2.

6.3. IMPROVEMENTS FROM USAID FINANCED EQUIPMENT PURCHASES

Taking into account the findings of the brief audit made at Eesti Fosforiit and the needs expressed by plant management, it is recommended that the following equipment be supplied to the plant to assist in making energy efficiency improvements in the short term:

6.3.1. ECO F-1. Energy and production management computers

Existing conditions:

EF collects a vast amount of information every day, but has no way of organizing this data and using it for production and energy management control.

Recommended action:

Provide two IBM-PC 286 or 386 equivalent computers with printers and Lotus 1-2-3 software, together with the spreadsheets of production and energy developed by RCG/Hagler, Bailly, Inc. EF will obtain training in Lotus locally.

Estimated cost of equipment:

$6,000

Estimated cost of installation and training:

$1,000

Estimated benefits, energy savings (and economic savings):

The equipment, with the proper software, can serve as the basis of an energy management information and control system. The introduction of a management information system, with control actions taken in response to conditions identified in the plant, can achieve energy savings of 5-10%. Based on savings of at least 1% of energy costs, benefits are estimated as $48,000 per year, not including productivity or quality benefits.

Estimated payback period:

0.1 year

6.3.2. ECO F-2, Portable efficiency monitoring instruments

Existing conditions:

In tests of combustion efficiency at EF, excess air was found to be 100% on one steam boiler, which is too high. Boiler water quality (total dissolved solids) was measured, and TDS was found to be too high. Some areas of inadequate insulation were observed, and heat loss from steam and hot water distribution systems is substantial. Further optimization would be possible with advanced instrumentation and efficiency teams.

Recommended action:

Provide an energy efficiency test kit consisting of electronic oxygen sensor, electronic carbon monoxide sensor, thermocouple indicator and probe set, wet chemical combustion analyzer, boiler dissolved solids meter, infrared thermometer, and ultrasonic tester. EF to form efficiency teams to put the instrument to work as part of an energy management program.

Estimated cost of equipment: $11,500 consisting of:

combustion kit	4,000
TDS meter:	500
thermocouple:	1,000
infrared:	1,000
ultrasonic (air/solid)	4,000
electric survey meter	1,000

Estimated cost of installation:

Modifications to air dampers to be made by EF, estimated as $20,000.

Estimated benefits, energy savings (and economic savings):

Based on boiler efficiency at time of audit, combustion efficiency improvements of 3-5% are possible. Avoidable losses in the distribution system are estimated as 1-3%. The estimated annual savings of the energy efficiency teams is 2%, or $200,000 per year.

Estimated payback period:

0.2 year

6.3.3. <u>ECO F-3. Fixed meters for natural gas</u>

Existing conditions:

Natural gas is used in several areas of the plant, without any submetering.

Recommended action:

Install appropriate meters to measure gas flow at various locations. By doing this, energy accounting efficiency can be monitored and waste can be reduced. The following areas' natural gas supply should be measured:

steam boilers
hot water boilers
granulation section

Estimated cost of equipment:
$9,000

Estimated cost of installation:
$1,000

Estimated benefits, energy savings (and economic savings):

gas savings of 1% for both the boiler section and the Granulated Superphosphate sections, or $36,000 per year

Estimated payback period:

0.2 year

6.4. IMPROVEMENTS REQUIRING MAJOR CAPITAL INVESTMENT

6.4.1. Condensate recovery

Current Conditions:

The current level of condensate recovery is believed to be under 15 percent of the steam produced, some condensate being returned from the "white soot" workshop only. A higher condensate return will increase the overall boiler system efficiency, provided the heat in the returned condensate is retained through proper pipeline insulation.

Recommended Action:

The plant should therefore try to increase the proportion of condensate recovery and should balance the cost of any new lines and insulation with the value of the recycled energy at "free market" international energy prices.

Expected Results:

An estimated 5% reduction of current boiler gas use, which corresponds to 2% of total yearly fuel cost.

6.4.2. Possibilities for further heat recovery

Current Conditions:

The economizer section on the 25 t/h steam boiler is effective in reducing the stack temperature to a very low level (estimated at about 80 to 90 deg C). For the hot water boiler, the stack temperature was measured at about 200 deg C and therefore some potential for heat recovery exists.

Recommended Action:

The economics of installing an economizer section should be checked by the plant. There may also be redundant equipment available in other parts of the factory which would enable heat to be recovered to preheat the combustion air.

Expected Results:

An estimated 2% reduction of current boiler gas use, which corresponds to 0.8% of total yearly fuel cost.

APPENDICES

GRAPHICAL PRESENTATIONS OF HISTORICAL ENERGY, PRODUCTION AND CLIMATIC MONITORING DATA

EESTI FOSFORIIT CHEMICAL PLANT

APPENDIX A

Eesti Fosforiit System

• M FLOWMETER

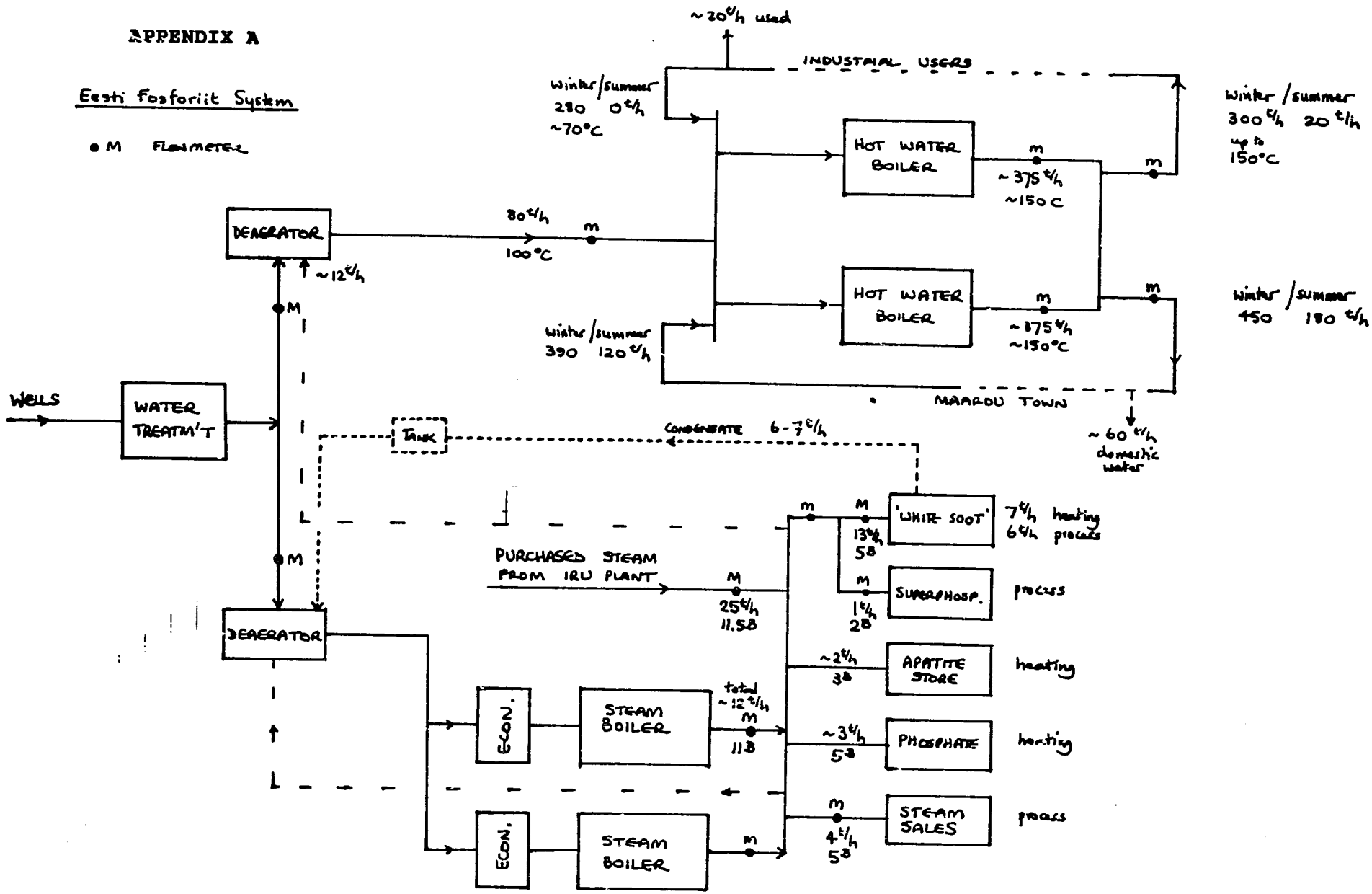

APPENDIX B

How to Assess Results

A good way to display the results of energy saving measures month by month is to maintain a plot of cumulative space-heating energy against corresponding accumulated monthly degree day totals. Since they are in direct proportion, the slope of the straight line plot will yield a running efficiency in terms of kWh per degree day which can then be compared with the corresponding figure the previous year. A significant energy saving will be reflected in a reduction in the number of kWhs per degree day.

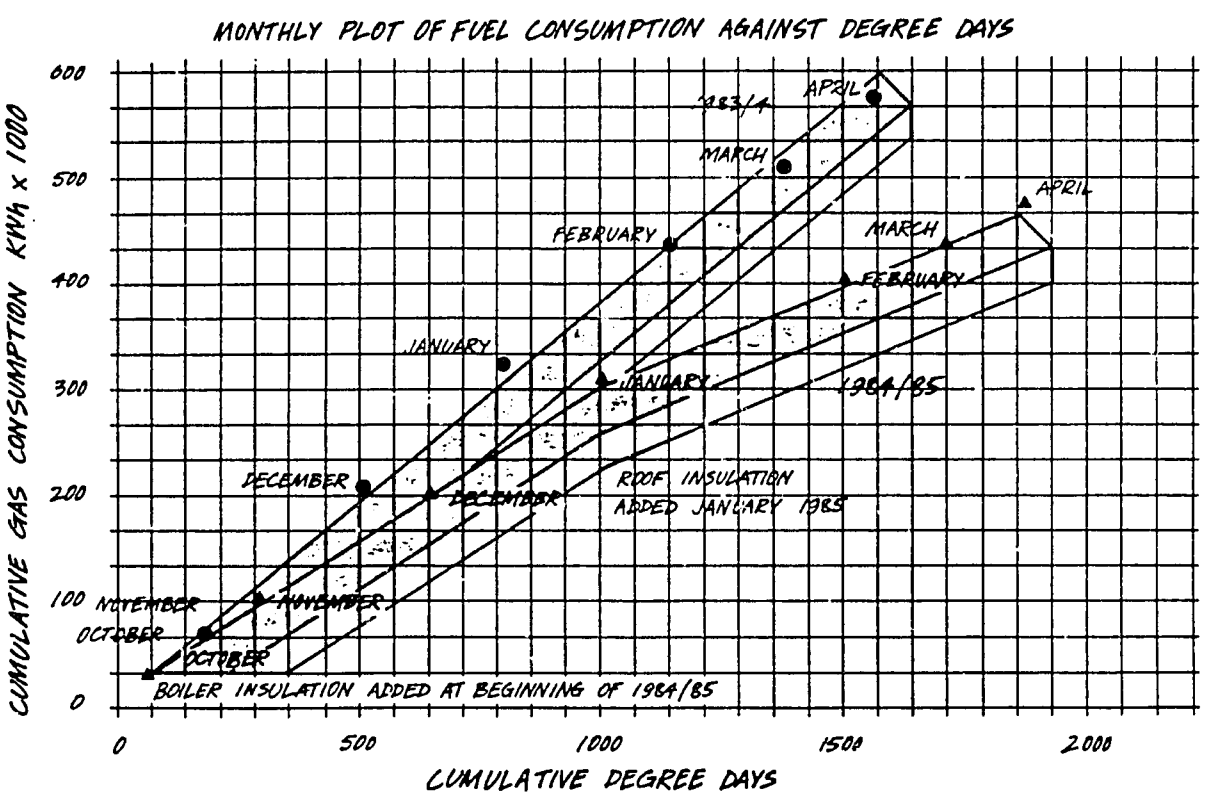

Source : "Energy Efficiency in Buildings"
Energy Efficiency Office, UK Dept. of Energy, February 1990.

APPENDIX

EESTI FOSFORIIT - ENERGY/PRODUCTION

1990-91, Granulated Super-Phosphate

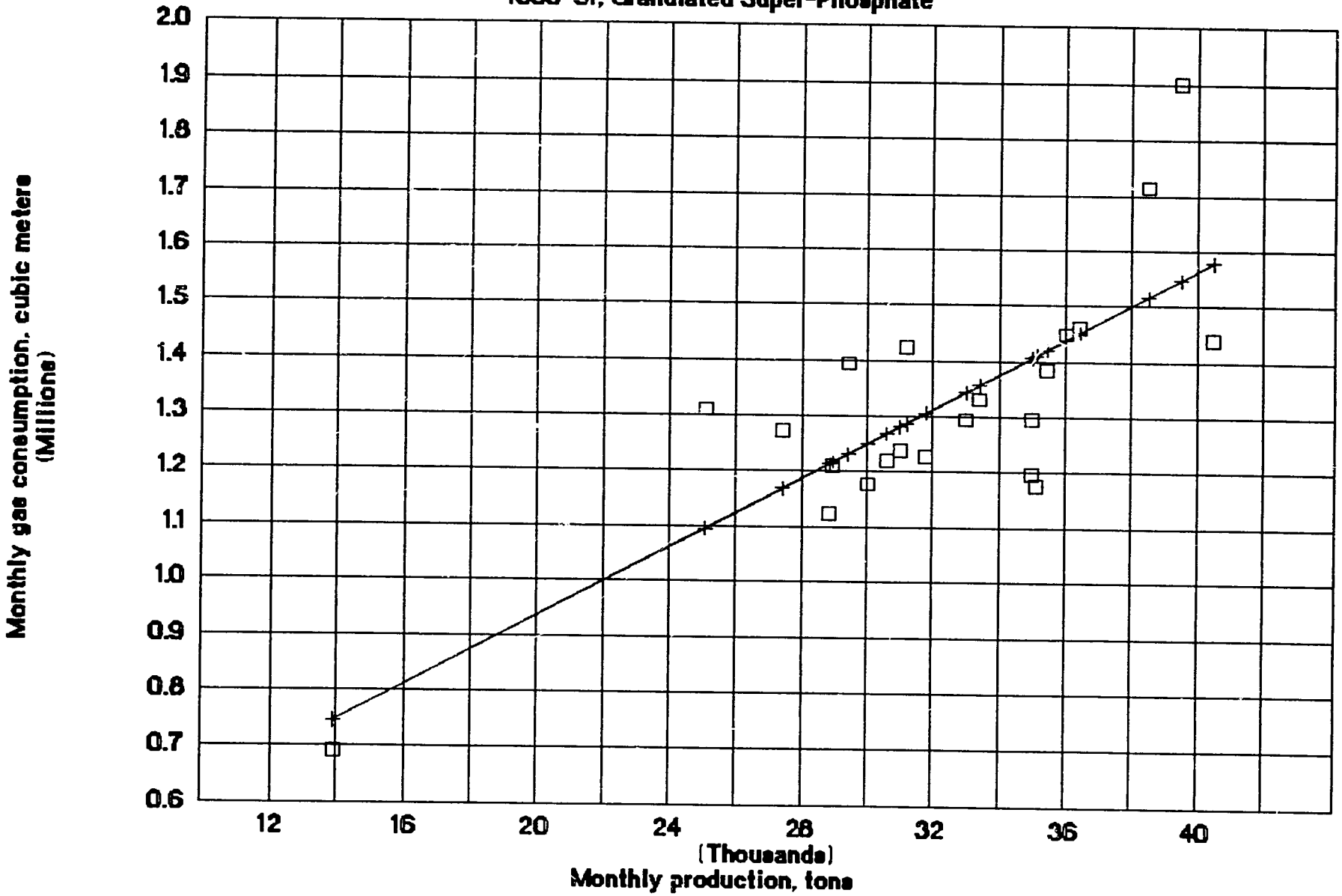

APPENDI D

EESTI FOSFORIIT – ENERGY INTENSITY

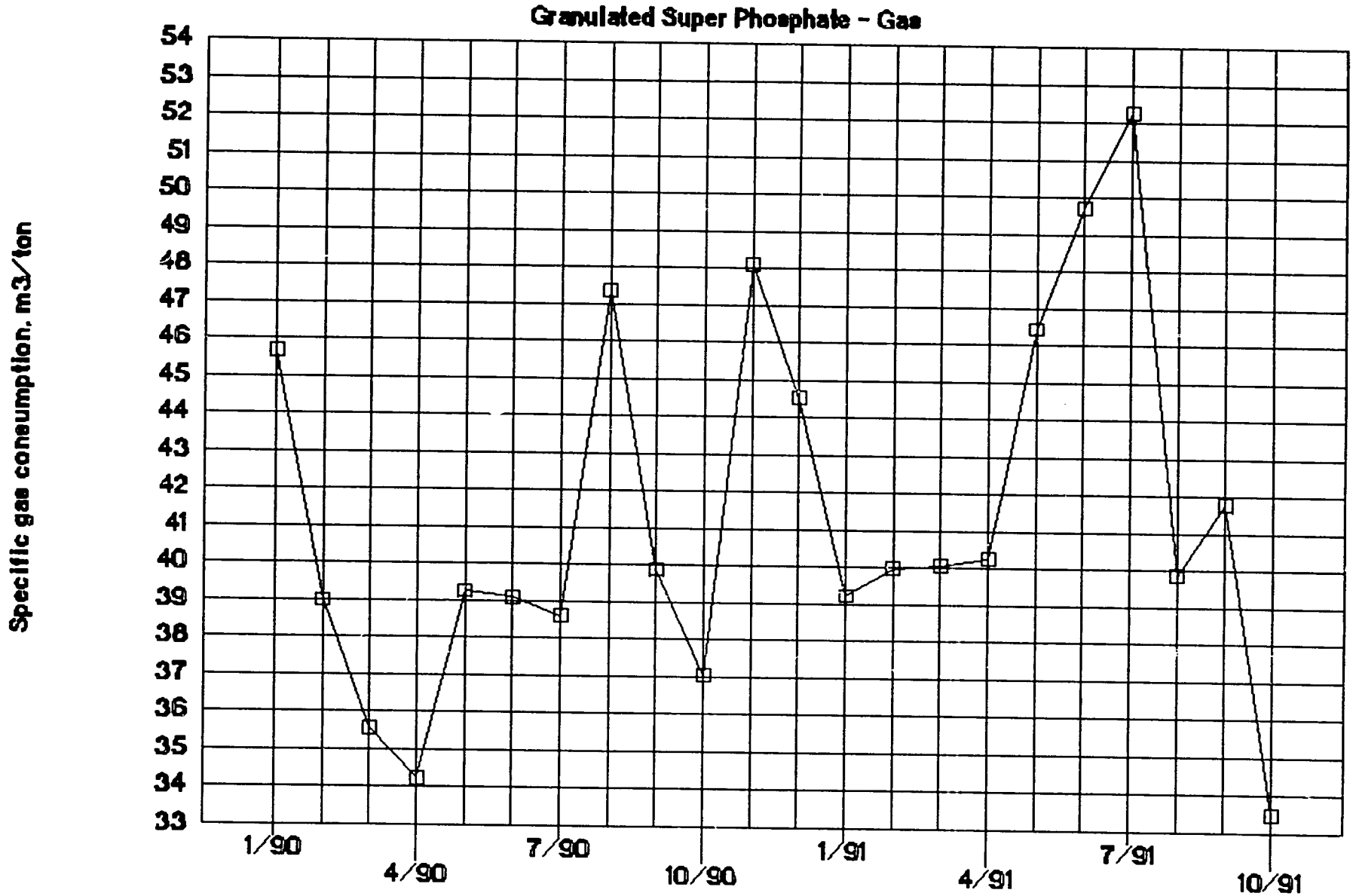

33.

APPE _ X E

EESTI FOSFORIIT – PRODUCTION

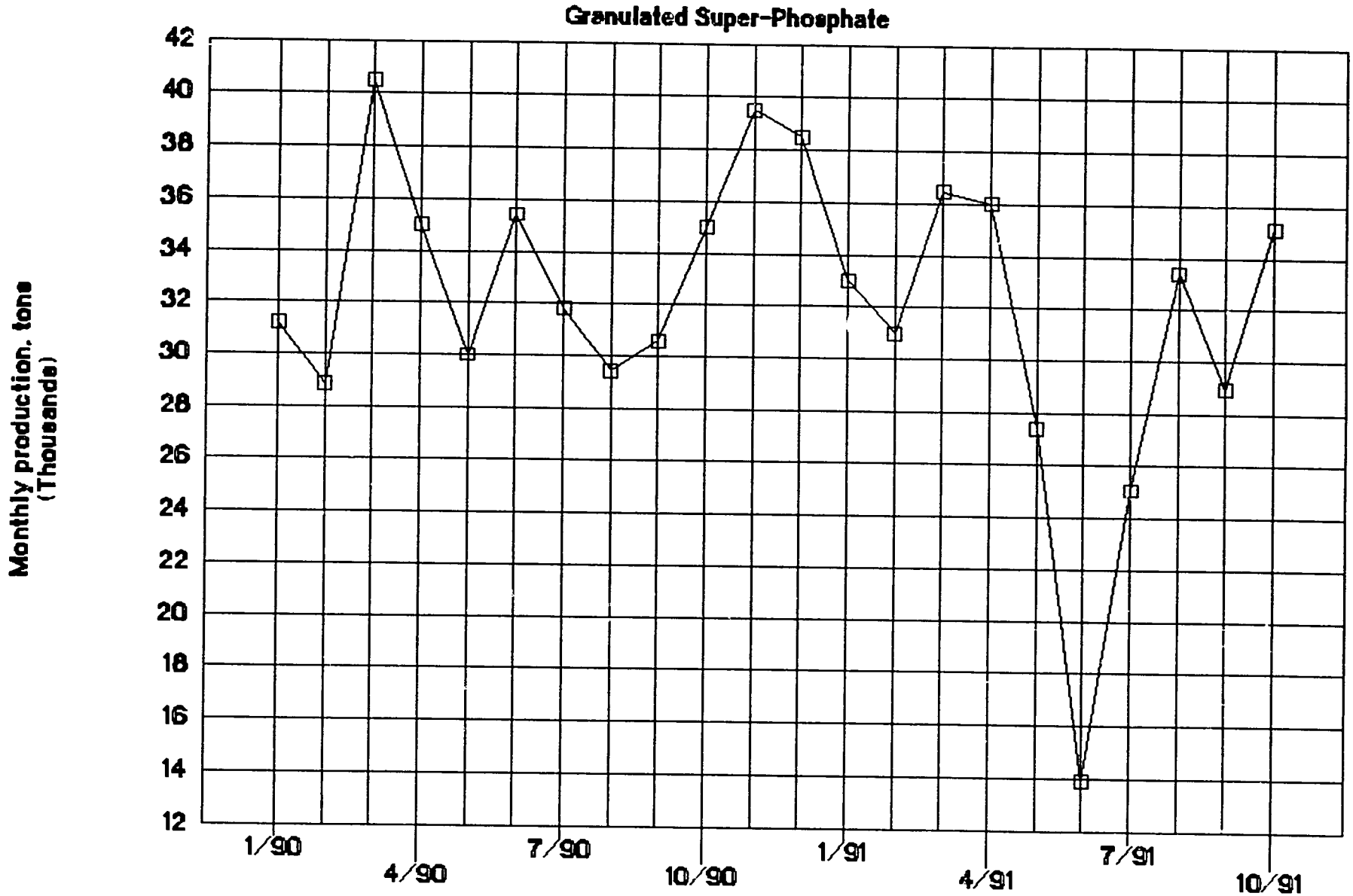

34

APPENDIX
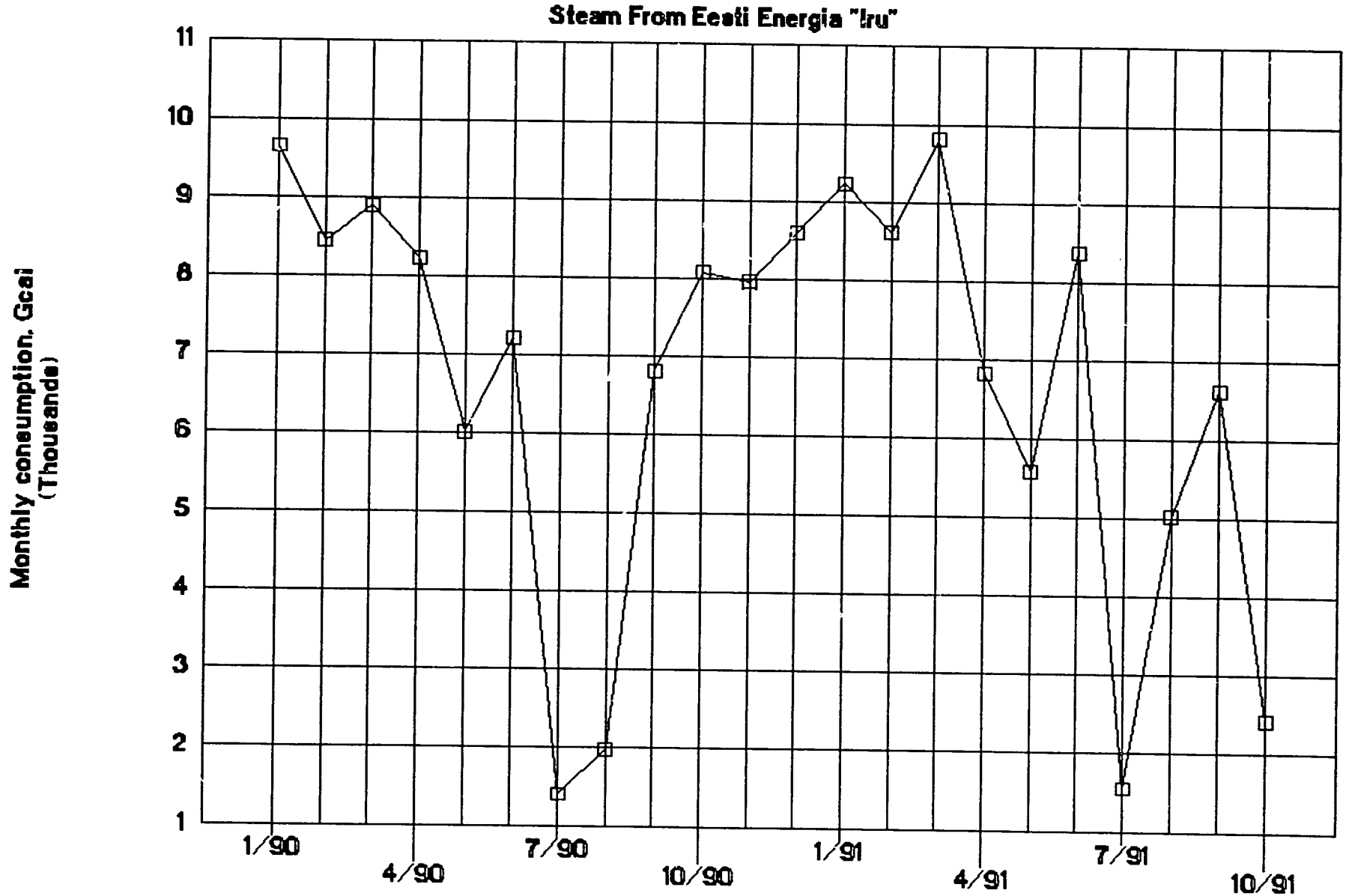
EESTI FOSFORIIT – ENERGY CONSUMPTION