PN-ABL-044
76721

INDUSTRIAL ENERGY EFFICIENCY AUDIT REPORT

SOUTH BUCHAREST COMBINED HEAT AND POWER STATION
Bucharest, Romania

JANUARY 1992

PREPARED BY: RESOURCE MANAGEMENT ASSOCIATES OF MADISON, INC.
Madison, WI

and

INSTAPART
Bucharest, Romania

U.S. EMERGENCY ENERGY PROGRAM FOR EASTERN AND CENTRAL EUROPE

U.S. AGENCY FOR INTERNATIONAL DEVELOPMENT
BUREAU FOR EUROPE
WASHINGTON, D.C. 20523

PN-ABL-044

INDUSTRIAL ENERGY EFFICIENCY AUDIT REPORT

SOUTH BUCHAREST COMBINED HEAT AND POWER STATION
Bucharest, Romania

JANUARY 1992

PREPARED BY: RESOURCE MANAGEMENT ASSOCIATES OF MADISON, INC.
520 University Avenue
Suite 300
Madison, WI 53703
(608) 283-2880

and

INSTAPART
Sos. Catelu nr. 9
Bloc PM 62, Sc 1, Ap. 12, Et 2
Bucharest III
Romania
40-48-388388

U.S. EMERGENCY ENERGY PROGRAM FOR EASTERN AND CENTRAL EUROPE

U.S. AGENCY FOR INTERNATIONAL DEVELOPMENT
BUREAU FOR EUROPE
OFFICE OF DEVELOPMENT RESOURCES
ENERGY & INFRASTRUCTURE DIVISION
WASHINGTON, D.C. 20523

USAID Contract EUR-0015-C-1006-00

Table of Contents

i. Eastern Europe Industrial Energy Efficiency Program 1

ii. Executive Summary 3

1.0 Plant Description 6
- 1.1 South Power Plant 6
  - 1.1.1 Organization 6
  - 1.1.2 Electrical and Thermal Capacity 6
  - 1.1.3 Operations and Equipment 6
  - 1.1.4 History of Energy Efficiency Measures 7
- 1.2 District Heating System 7
  - 1.2.1 Organization 7
  - 1.2.2 Thermal Capacity 10
  - 1.2.3 Distribution System 10
  - 1.2.4 Operation and Control 10
  - 1.2.5 History of Energy Efficiency Measures 12

2.0 Plant Energy Profile 13
- 2.1 South Power Plant 13
  - 2.1.1 Annual Electric/Thermal Energy Production and Fuel Consumption 13
  - 2.1.2 Daily Electric/Thermal Energy Production and Fuel Consumption 13
  - 2.1.3 Energy Costs 20
- 2.2 District Heating System 20

3.0 Audit Description 21
- 3.1 Summary 21
- 3.2 Steam Boiler Area 22
- 3.3 Boiler/Turbine Control Rooms 22
- 3.4 Boiler Stack Area 23
- 3.5 Boiler Combustion 23
- 3.6 District Heating System 24

4.0 Summary of Results 25
- 4.1 General Results 25
- 4.2 Recommended Short-Term Measures 25
  - 4.2.1 Bucharest-South Combined Heat and Power Station 25
  - 4.2.2 District Heating System 30
- 4.3 Recommended Long-Term Measures 30
  - 4.3.1 Bucharest-South Combined Heat and Power Station 30

4.3.2 District Heating System 31
4.4 Replication Potential 32
4.5 Pricing and Policy Issues 32
4.6 Specifications of Recommended Equipment Purchases 32
4.6.1 South Power Plant 32
4.6.2 District Heating System 34

5.0 Plant Management and Organization 35
5.1 General Description 35
5.2 Recommended Actions to Promote Energy Efficiency 36

6.0 Implementation Phase 37
6.1 Summary 37
6.2 In-Country Review of Draft Audit Report 37
6.3 Energy Efficiency Measures Adopted by the Facility 38
6.4 Management Results 39
6.5 Implementation Plan 40
6.6 Expected Energy Savings 41

List of Tables

Table 1. Annual Energy Savings for Short-Term Measures 4
Table 2. Combustion Analysis Results 24

List of Figures

Figure 1. Schematic of Plant Energy System 8
Figure 2. Primary Piping Network 11
Figure 3. Energy Production Profile 14
Figure 4. Annual Fuel Consumption 15
Figure 5. Typical Summer Day Energy Production 16
Figure 6. Typical Winter Day Energy Production 17
Figure 7. Typical Summer Day Fuel Consumption 18
Figure 8. Typical Winter Day Fuel Consumption 19
Figure 9. General Layout of Oil Piping 27

List of Appendices

Appendix A
Brazi Power Plant Addendum

Appendix B
Photographs

Appendix C
List of Abbreviations

i. Eastern Europe Industrial Energy Efficiency Program

The countries of Eastern Europe face unprecedented changes both in their political and economic systems. To aid in the transition to market economies, the U.S. Agency for International Development (USAID) designed the Eastern Europe Emergency Energy Program. Resource Management Associates of Madison, Inc. (RMA) is the technical assistance contractor for the Industrial Energy Efficiency Component (IEEC) of the program in Romania.

The Industrial Energy Efficiency Component was designed to address the problems of industrial energy efficiency with a short-term program aimed at the immediate needs of industry. The program involves three main activities:

1. To identify and implement cost-effective low-cost/no-cost energy improvements, with an emphasis on oil savings.

2. To conduct energy audits and transfer energy auditing and management techniques, including financial and economic analysis.

3. To provide energy auditing and/or energy efficiency equipment to implement the program objectives, improve energy management, and identify additional energy efficiency opportunities.

The IEEC program deliverables consist of plant audit reports, a policy and institutional analysis report, an industry profile report, and the in-country audits, training, and equipment delivery and installations. The tasks are being carried out by a team of energy specialists and policy analysis experts in four different phases:

- Phase One: Screening - During this phase the plants to be audited will be identified, and a specific plan to implement the following phases developed and put in place.

- Phase Two: Industrial Plant Energy Audit/Training - A team of energy specialists will arrive in-country and perform a detailed energy audit at the eight selected industrial sites. They will identify short-term energy efficiency measures, develop recommendations to implement these measures, demonstrate and train plant personnel on auditing techniques, and demonstrate financial and economic methodologies for justifying energy improvement projects. Additional equipment will be ordered for Phase Three.

- Phase Three: Implementation - The recommendations identified in Phase Two will be implemented, evaluated, and modified as necessary. Additional training will be provided and the final energy efficiency equipment turned over to the host country.

- Phase Four: Analysis of Factors - This phase will analyze the factors that make up energy efficiency management and investment decision making. Recommendations for policy reform and options for enhanced energy management will be identified and a program for implementation suggested.

Energy monitoring and testing equipment will be turned over to the Romania industrial sector and the Government of Romania (GOR). The GOR will be provided with analysis and recommendations for further energy efficiency measures.

ii. Executive Summary

An industrial energy efficiency audit was conducted at the Bucharest-South Combined Heat and Power Station located in Bucharest. An energy evaluation was also made on the central district heating system for Bucharest. The south power plant, built in 1967, supplies 50% of the hot water to the district heating system. The district heating system provides space heating and potable water heating for 75% of Bucharest. The south power plant also provides about 450 MW of electrical power to the national electric system operated by the National Power Company, RENEL.

Annually the plant consumes about 700,000 metric tons of oil and about 600 million cubic meters of gas. The plant produces about 4000 Tcal/year for the district heating system through a turbine system and sixteen hot water boilers. The annual electricity provided by the plant ranges from 2300 to 3300 GWh depending on fuel and equipment availability. In the winter the fuel priority is to provide the maximum hot water temperatures for the district heating system, while maintaining full power output to the grid. However, due to low gas pressures usually encountered in the winter, the lack of oil, and insufficient capacity, the temperatures in the apartments can be maintained at only 12 °C on colder days. This is a very serious problem that has not yet been resolved.

The audit was performed over a period of one week and focused on the large energy using equipment at the facility. The six steam boilers at the power plant are rated for a total of 2780 metric tons/hour of steam and were the primary focus of the audit. They burn both gas and oil. The oil accessible to the plant is similar to fuel oil #6. It is high in sulfur, vanadium and impurities. Major problems, such as high residue on steam superheaters and corrosion of ducting in the boiler system, are closely linked to the use of low grade oil. The residual problem is especially serious since it has degraded the maximum total steam boiler output by about 30%, to 1960 metric tons/hour of steam.

During the audit it was clearly apparent that the personnel operating the plant were very aware of their greatest energy efficiency problems. With the right instrumentation and information on equipment available outside of Romania, plant personnel are in the best position to justify energy efficiency measures within the other constraints of the operation. Therefore, for short-term measures, the audit focused on identifying information needs in terms of instrumentation and foreign equipment available. Both short-term measures and long-term measures were recommended for the plant.

<u>Short-Term Energy Management Equipment Recommendations - Power Plant</u>

The recommended short-term measures are provision of equipment for combustion analysis and fluid flow measurement, pipe insulation analysis, and electric load reduction. During the audit, combustion efficiency was tested on four of the steam boilers. The results indicated that the boilers were operating at 3 to 5% below the efficiency expected. With proper combustion analysis equipment, the combustion efficiency could be significantly improved.

The recommended combustion analysis equipment includes an ENERAC 2000 combustion analyzer and two hand held combustion analyzers, with the total cost of $6,900. There is presently no accurate way to measure oil flow into the boilers. With proper oil flow meters the most efficient arrangement of burners and boilers can be used. The recommended equipment for this purpose is one ultrasonic flow meter at an estimated cost of $7,700.

Although pipe insulation was not in bad shape, there are areas where the insulation could be improved. Insulation is available to the plant, but the proper tools to adequately justify the purchase of insulation are not. The recommended equipment for this measure is an infrared temperature sensor and a hand held digital thermometer at an estimated cost of $2,800.

The plant itself has many large motors such as those found on the fans and pumps. The justification of measures needed to reduce energy consumption on these motors requires load data that can be obtained by the use of a power analyzer. The energy analysis assumed as an example the use of a variable speed drive on one boiler fan system. The equipment for this purpose is a power analyzer and an IBM compatible portable computer at an estimated cost of $8,800. It should be noted that in the U.S. a power analyzer is an invaluable tool for utilities. It helps reduce both the electric costs for their customers and the total system demand. This plant presently has no comparable power analyzing equipment.

Energy analysis was performed to calculate energy savings for the recommended measures. In addition, an economic justification was presented on each recommended equipment purchase. The energy savings for the short-term measures are as follows:

Table 1. Annual Energy Savings for Short-Term Measures

Measure	Energy Saved (Gcal)	Gas Saved (million m^3)	Oil Saved (Metric tons)	Cost Saved (1000s Lei)	Cost Saved (1000s $)
Power Plants:					
1) Combustion Analysis:	440,000	20.5	28,000	170,948	4,884
2) Fluid Flow Measurement:	64,000	-	7,000	28,256	807
3) Pipe Insulation:	10,000	-	1,100	4,379	125
4) Electric Load Reduction:	554	-	-	1,306	37
District Heating:					
5) Fluid Flow Measurement:	80,000	-	8,800	35,000	1,000

Romanian currency was converted to U.S. dollars at a rate of 35 Lei/$.

The payback for these measures would all be less than three months and some are almost immediate.

Long-Term Recommendations - Power Plant

The recommended long-term measures are to reduce the sulfur/vanadium levels in the oil, reduce water treatment requirements, implement automatic combustion control on steam boilers built in 1975, and improve burner atomization. These measures should all be evaluated in conjunction with the potential replacement of some of the boilers in the next 5 to 10 years. Four of the six boilers are already 150% over their rated life expectancy.

The general management of the company requires the plant operator, Mr. Sofran, to decide what energy efficiency measures to implement. He has many responsibilities as he is the primary individual keeping the plant in operation. There is no one individual dedicated to evaluating energy efficiency measures and developing the justification for these measures.

Short and Long-Term Energy Management Recommendations - District Heating System

The district heating hot water distribution system obtains almost 50% of its thermal capacity from this plant. Due to both a shortage of fuel limiting the operation of supplemental hot water boilers and system leaks which lose 1,200 meters^3 of water each hour, the capacity is insufficient and does not meet the District demand. The District Authority needs to actively pursue a program which identifies and repairs system leaks, and develop a longer long-term program of instituting control and metering systems.

The recommended short-term measure for assisting in the identification of system losses in the district heating system is the provision of a portable ultrasonic flow meter at an estimated cost of $8,700.

In summary, plant management has not had the luxury to maintain their equipment properly due to the continual demand on the plant. They have been much more concerned with maintaining the operation of the equipment than improving the efficiency. They are just now in a position to use economic justification to request authorization from RENEL to purchase energy efficient equipment. Besides being inadequately maintained and of inadequate capacity, the system is very old. Therefore, in the long-term, management will need to be making decisions about large investments in new equipment. The equipment recommended in this report will allow them to make informed decisions optimizing short and long-term investments.

Implementation Phase

The implementation phase of the audit involved a return trip to the facility to expedite the implementation of the audit team's recommendations. All equipment provided to the Bucharest South Power Plant and District Heating System was portable, so the main focus of the visit was in training the staff in the use of the equipment. The draft audit report was reviewed with plant staff, and a plan for using the equipment was developed.

1.0 Plant Description - Power Plant and Distribution System

The power plant produces electricity, steam and hot water. The hot water is sold to the municipal district heating system. Because the power plant and the municipal district heating are so interrelated, the description of the "plant" includes a section devoted to the description of the hot water district heating system. The main focus of the audit, however, was on the power station.

1.1 South Power Plant

The Bucharest-South Combined Heat and Power Station is the largest power and thermal plant in Bucharest. It provides about 50% of both the electrical power and thermal energy required by Bucharest. The four other plants serving the city are similar but smaller. The plant has both steam and hot water boilers. The steam boilers are used to cogenerate electric power for Bucharest and thermal energy for the city wide hot water district heating system.

1.1.1 Organization

The plant employs about 500 people in the five departments of chemical treatment, steam boilers, turbines, electrical, and thermal measurement. Each section has a chief and two technicians. Mr. Sofran is the overall director of plant operations, was the audit team's primary contact, and makes most of the decisions affecting operation of the plant. Further description of the organization is provided in Section 5.0.

1.1.2 Electrical and Thermal Capacity

The installed capacity for electric power generation at the plant is 550 MW, but only 420-450 MW is available. The installed thermal capacity is 830 Gcal/hr from the steam cogeneration system and 1600 Gcal/hr from the hot water boilers, but only a total of 950 Gcal/hr is available for the district heating system. The low availability of electric and thermal energy is due to extreme maintenance problems that will be discussed later.

1.1.3 Operations and Equipment

The major items of equipment in the plant are the steam boilers, the steam turbines, the hot water boilers, the cooling towers, and the voltage transformers. There are 16 hot water boilers, each rated at 100 Gcal/hr, which use both natural gas and oil. There are six steam turbine units that interconnect with six steam boilers. A gas turbine peaking station rated at 36.3 MW has been decommissioned due to lack of spare parts.

Steam boiler units 1 through 4, of Russian design, were built in 1967 and use a common steam header to feed two turbines rated at 50 MW and two turbines at 100 MW (see *Figure 1*). Units 5 and 6, of Czechoslovakian design, were built in 1975 and have separate 125 MW rated turbine units. Boiler 1 runs on 100% gas, boilers 2-4 use 80% oil and 20% gas, and

boilers 5-6 can burn oil or gas, but usually are run strictly on oil. Boilers 1-4 are all rated at 420 metric tons/hr of steam, but average available capacity is presently 320 metric tons/hr. Boilers 5 and 6 are rated at 525 metric tons/hr, but presently average 350 metric tons/hr. The main cause of the lower output is the prolonged use of high sulfur/vanadium fuel oil #6 which causes thick residue to build up on the boiler heat exchangers. This problem will be addressed in more detail in a later section.

Considering the size of the plant, the time available for the audit, and the areas of highest energy conservation potential, the audit team decided to focus on the steam boiler operation. The basic function of the steam boilers is to produce steam at 540 °C and 145 atm pressure. This steam is fed to the turbines to generate electricity. After the steam is run through the turbines it enters a heat exchanger at 150 °C to transfer heat to the water used in the district heating system. In addition, some of the steam, about 200 metric tons/hr, is delivered directly to industries with no condensate return.

1.1.4 History of Energy Efficiency Measures

Energy conservation measures have been very limited during the life of the plant. The overwhelming concern was to produce as much electricity and thermal energy as possible because the plant was always below capacity. Therefore, the boilers were utilized continuously and could not be shut down for maintenance or to install energy conservation measures. In addition, the lack of information, spare parts, and capital has also limited improvements that could be made. In the next five to ten years, the major decision concerning whether it is better to put in new units or to completely overhaul the existing system will be made. Units 1-4 have already exceeded their life expectancy and will need attention soon.

1.2 District Heating System

The hot water district heating system that is used in Bucharest provides energy for space heating and potable water heating. The hot water is delivered to the system by five power plants similar to Bucharest-South operated by RENEL, and two smaller plants operated by private manufacturing companies.

1.2.1 Organization

The agency responsible for the distribution system is the "Independent Company of Thermal Energy Distribution". It reports directly to the Bucharest City Hall. The General Manager is Mr. Dabela and the Technical Manager is Mr. Ramba. They are getting a lot of pressure and support from City Hall to improve the heating system because of the low temperatures available.

Figure 1. Schematic of Plant Energy System

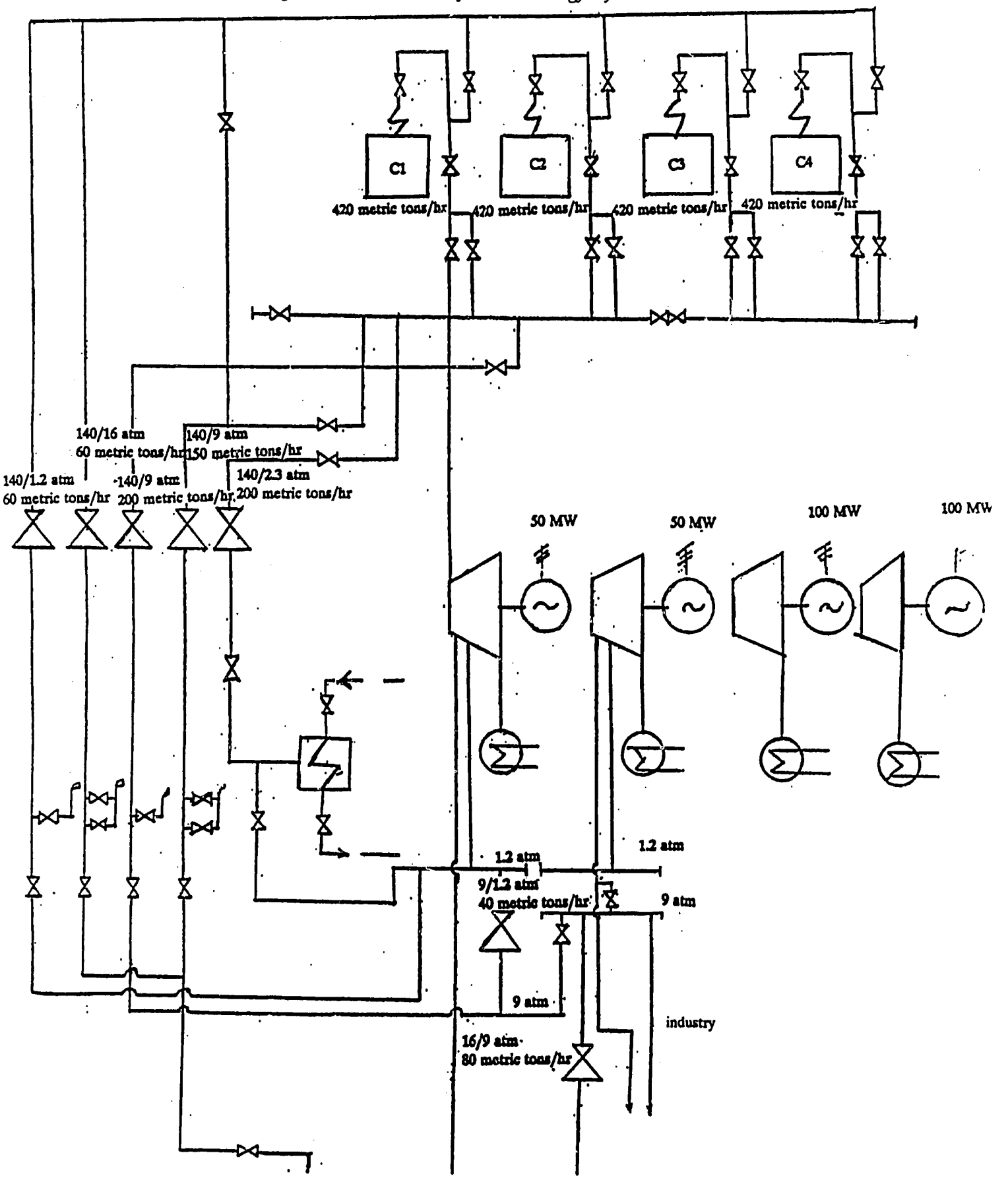

Figure 1. Schematic of Plant Energy System (continued)

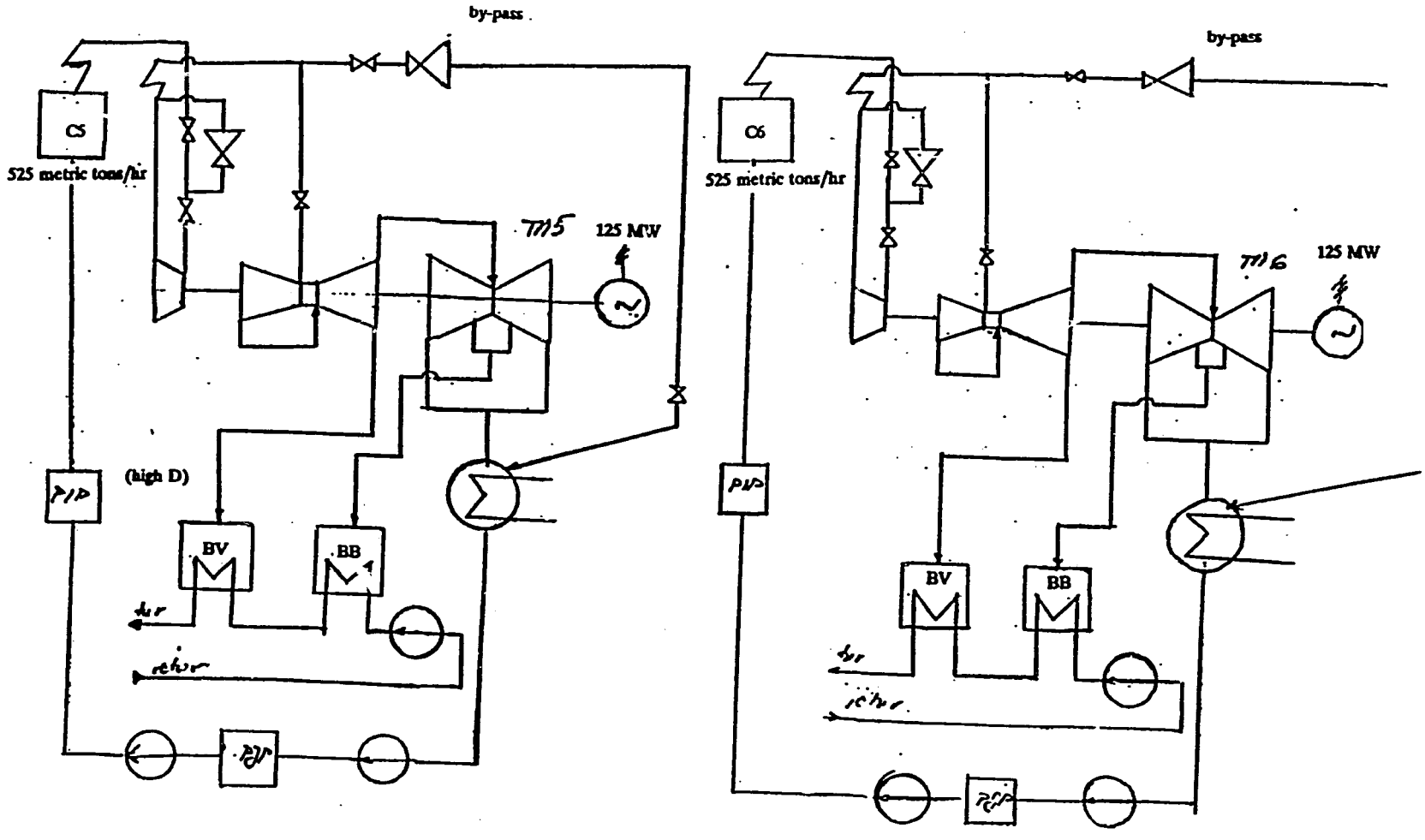

1.2.2 Thermal Capacity

The total available heat provided by the system is 3,000 Gcal/h which is enough to maintain the average apartment at 12-14 °C when temperatures are at their extreme. About 5,000 Gcal/hr of additional thermal energy would be needed to maintain temperatures in the 20-22 °C range.

1.2.3 Distribution System

Figure 2 shows the general layout of the primary closed loop piping network. The system almost completely encircles the city with 450 km of piping and provides about 70% of the heating needs of the city. The plan is to complete the loop around the city sometime near the year 2000.

The system has 700 distribution points that have heat exchangers for both space heating and potable water. Each distribution point serves 20 to 30 buildings or 500 to 2,000 apartments. The total system serves 550,000 apartments or 1.5 million people.

Construction for the distribution system was started in 1961 with a large extension completed in 1970. All buildings built during that period were added to the system. Most new buildings built from this time on will use direct gas energy. The primary piping system consists of steel piping 300 to 1200 mm in diameter laid in concrete channels or directly buried in the ground. The maximum flow rate in the largest pipes is 12,000 metric tons/hr. The total flow in the system is 60,000 metric tons/hr with total system volume of 300,000 metric tons.

1.2.4 Operation and Control

The system depends on the pressure created by the pumps at each power station feeding the circuit. There are no intermediate pumps in the system. The pressure feeding into the system at the power stations is 12 to 16 atm, at the farthest distribution point it is just 2 atm, and the water returning to the power station is at 0.2 atm.

Control of the system is very limited. There are no flow meters for the primary loop; the operators are required to use the orifice plate flow readings given to them by the power stations, which they consider to be inaccurate. The control of the system at the primary level involves a municipal dispatcher informing the various plants of the amount of hot water to supply. No integrated control or monitoring system exists. The plants call the dispatcher each hour with water flow and inlet and exit temperatures to determine Gcal delivered.

Figure 2. Primary Piping Network

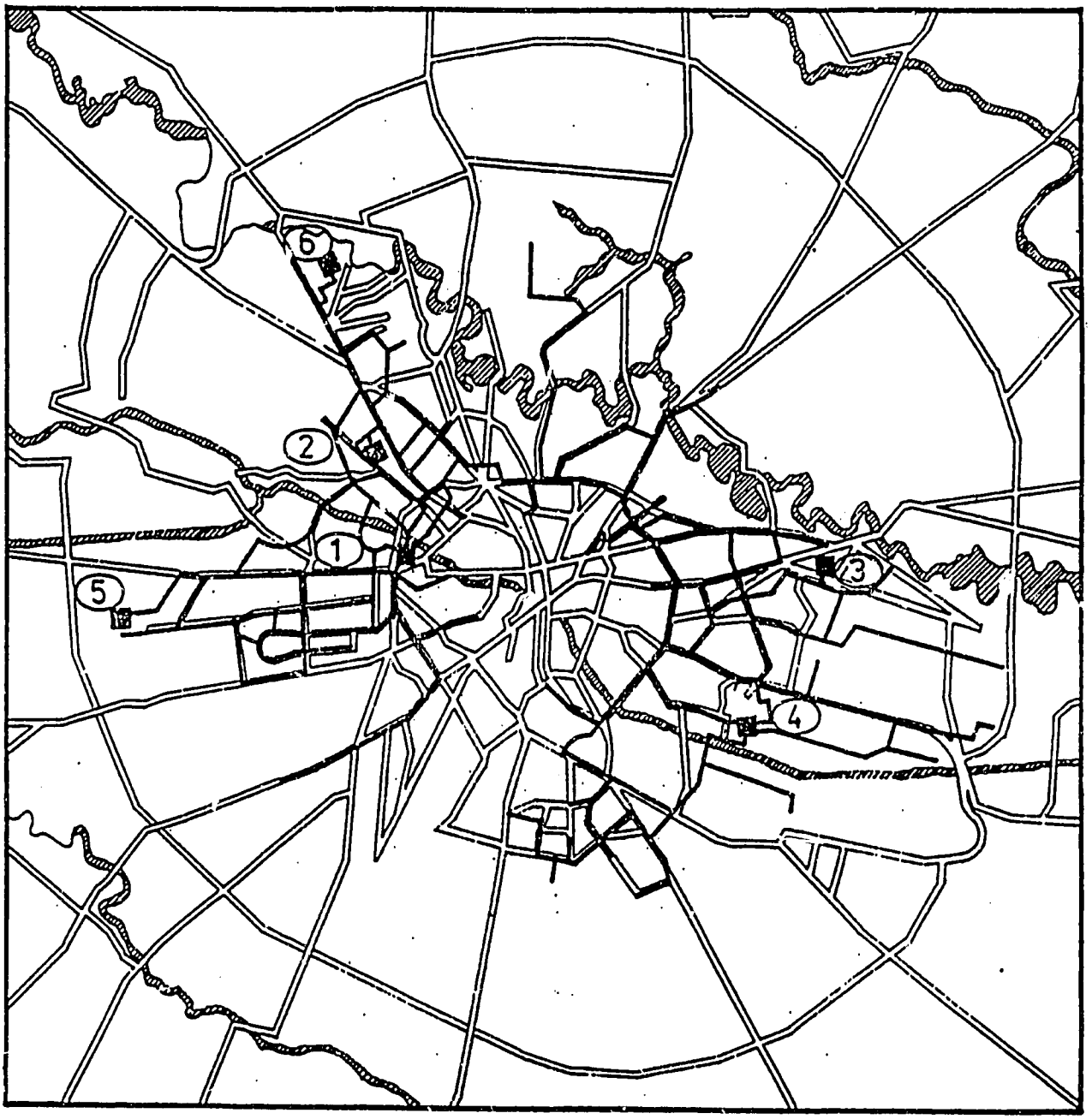

Distribution Network Chart, at the Level of 1985

LEGEND

1 CET Grozavesti
2 CET Grivita Rosie
3 CET 23 August
4 CET Sud Vitan (South Plant)
5 CET Vest
6 CET Casa Scinteii

CET = Thermo-electric Power Station

The primary circuit is interconnected between power plants and almost completely encircles Bucharest. This allows for some ability to provide heat to areas from an alternative thermalplant if the primary plant is off-line, but the procedure for this process is presently not automated.

Control at the distribution points involves operators manually turning valves at various distribution sites to regulate the total flow to either potable or space heating heat exchangers. Because they do not have enough capacity for both needs, they provide for one or the other. A schedule has been developed to provide hot water for potable uses (showers, washing, etc.) at certain times of the day. The operators also record the temperature and pressure gauge readings at each site to help identify problems. There are many problems caused by leakage in the system that add to the general lack of heat available. The leakage problem will be discussed in detail in a later section.

1.2.5 History of Energy Efficiency Measures

The energy efficiency measures adopted by the company mostly consist of attempts to locate leaks in the piping system. The addition of double pane windows, purchased by individual consumers, to many windows in the last year could also be considered a conservation measure by the system. The main concern is to reduce energy losses so higher temperatures can be delivered during cold weather.

2.0 Plant Energy Profile

2.1 South Power Plant

At peak conditions Romania presently imports about 5 to 10% of its electricity. The country is trying to maximize its output of electric energy in an effort to minimize the need to buy electricity from other countries. In addition to this requirement, the South Power Plant is forced to maximize thermal hot water production in the winter months. The main constraints on production are related to the availability of oil, gas pressure and capacity.

2.1.1 Annual Electric/Thermal Energy Production and Fuel Consumption

Figure 3 indicates that the power station has provided constant thermal energy to the district heating system for the last six years at about 4,000 Tcal/yr. The industrial thermal energy provided has also been constant at about 750 Tcal/yr. The electric energy provided has had the most fluctuation from year to year with a high of 3300 GWh in 1985 to a low of 2300 GWh in 1988.

The output of energy from the boilers is significantly affected by the build up of deposits from residuals with the use of high sulfur oil. Moreover, the overall efficiency for the plant decreases with the use of high viscosity oil.

Figure 4 shows the history of oil and gas consumption at the plant for the last six years. The amount of oil burned has doubled since 1985, while the use of natural gas has generally decreased during the same period. In 1990 the plant consumed 680,000 metric tons of oil (fuel oil #6) and consumed 600 million cubic meters of natural gas. At a cost of 4,000 Lei/metric ton of fuel oil and 2.8 lei/cubic meter for natural gas, the annual cost of fuel would be 4.4 billion lei.

2.1.2 Daily Electric/Thermal Energy Production and Fuel Consumption

Profiles for electric and thermal energy delivered during a typical day in the summer and winter are shown in *Figures 5 and 6*. It is interesting to note that for both days the electric power delivered is relatively constant between 300 and 350 MW, because the plant attempts to continually maximize the electric output. The thermal energy delivered to the district system is, of course, much higher on a winter day than in the summer. The summer peak is 165 Gcal/hr and the winter peak is 950 Gcal/hr. Consequently, the thermal load delivered to industry in the summer, 157 Gcal/hr, is higher than in the winter, 90 Gcal/hr, because the winter industrial load is not fully met due to fuel and capacity shortages.

Figures 7 and 8 show the profile for the consumption of gas and oil for the same days in the summer and winter. During the winter day, when the boilers are at their peak, the fuel oil is increased as the natural gas is decreased. However, since most of the boilers can use both gas and oil, the primary criteria for using one or the other are the delivery pressure of natural gas in the pipeline and the amount of oil available at the plant. The oil comes

Figure 3. Energy Production Profile

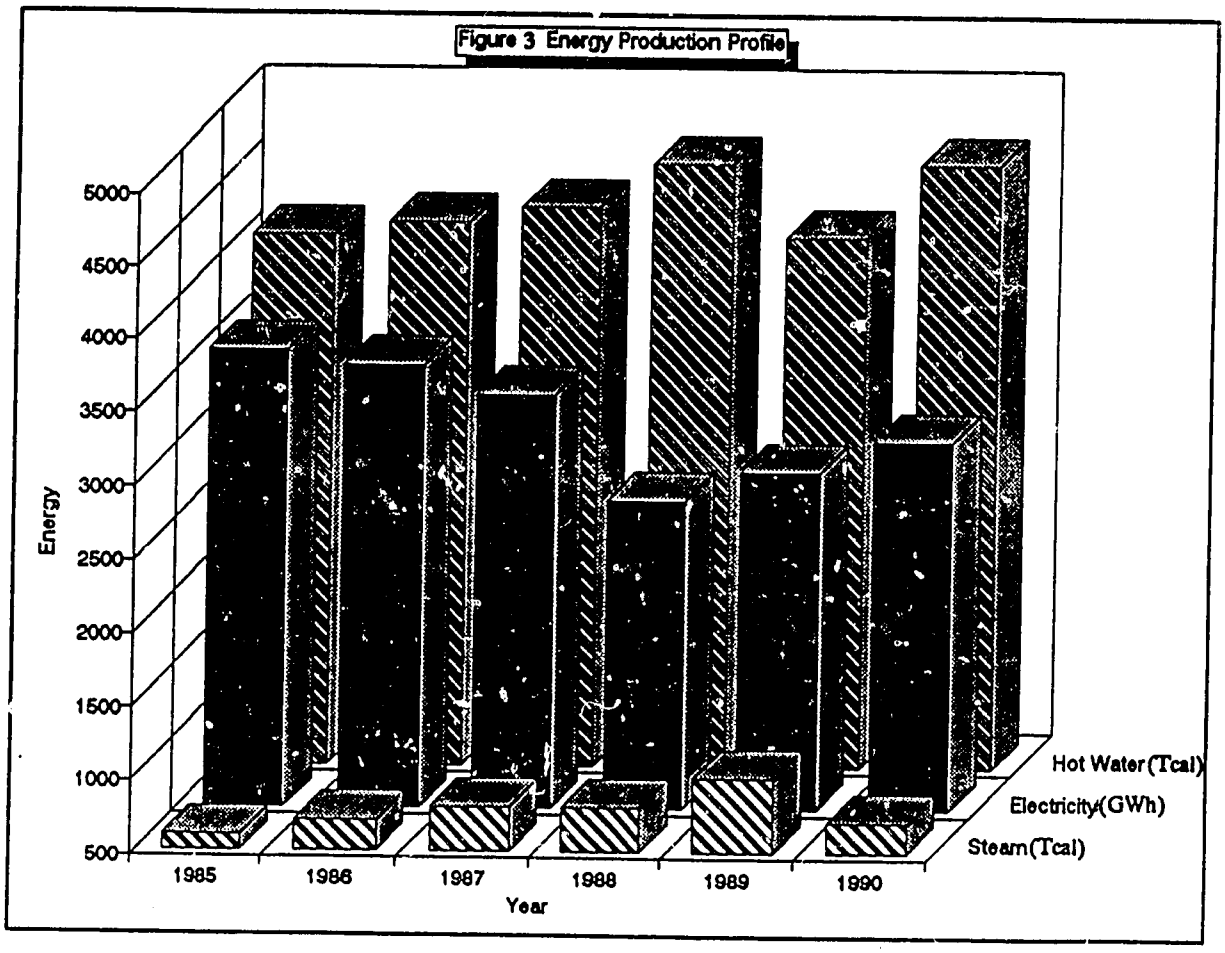

Figure 4. Annual Fuel Consumption

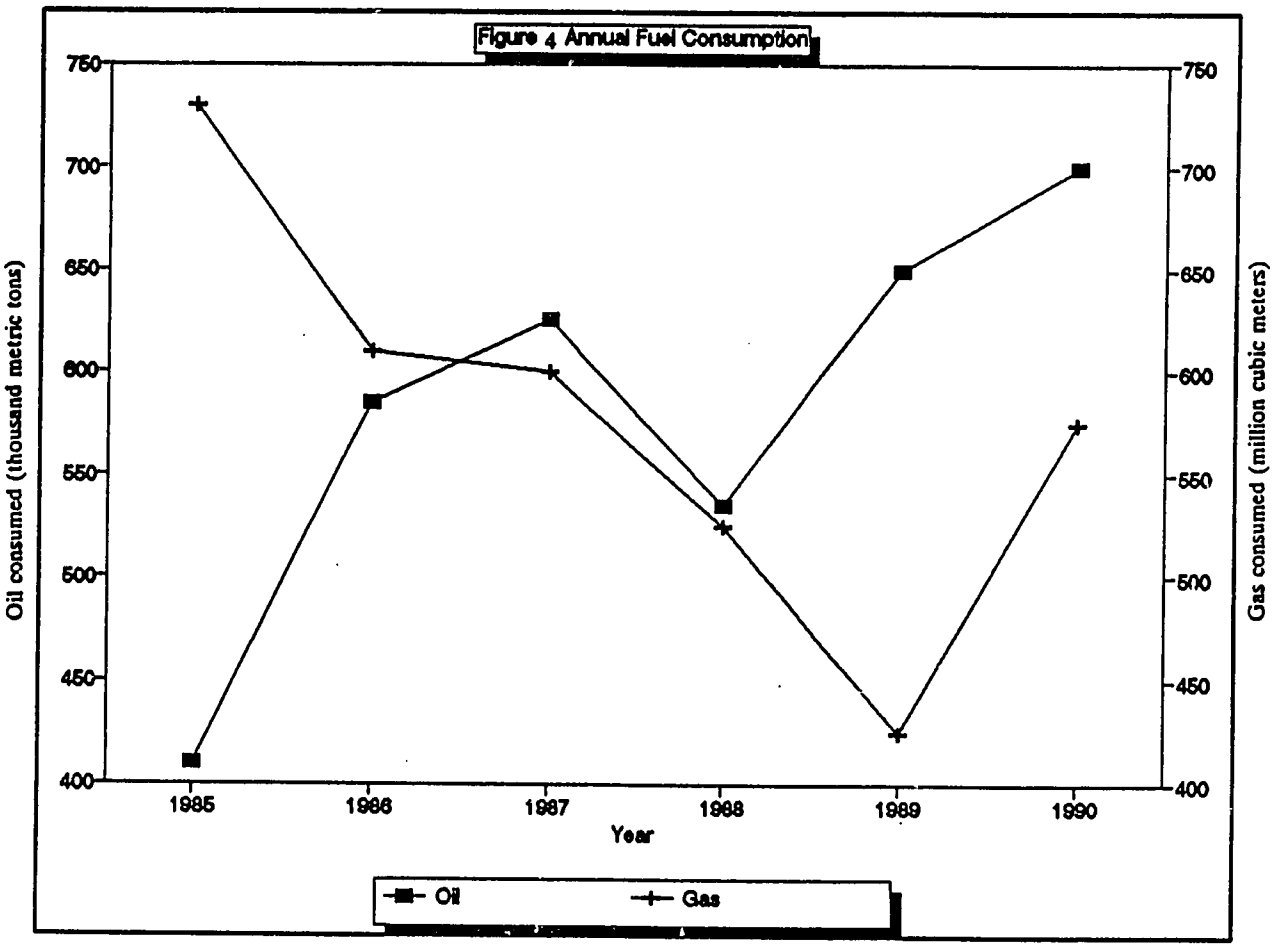

Figure 5. Typical Summer Day Energy Production

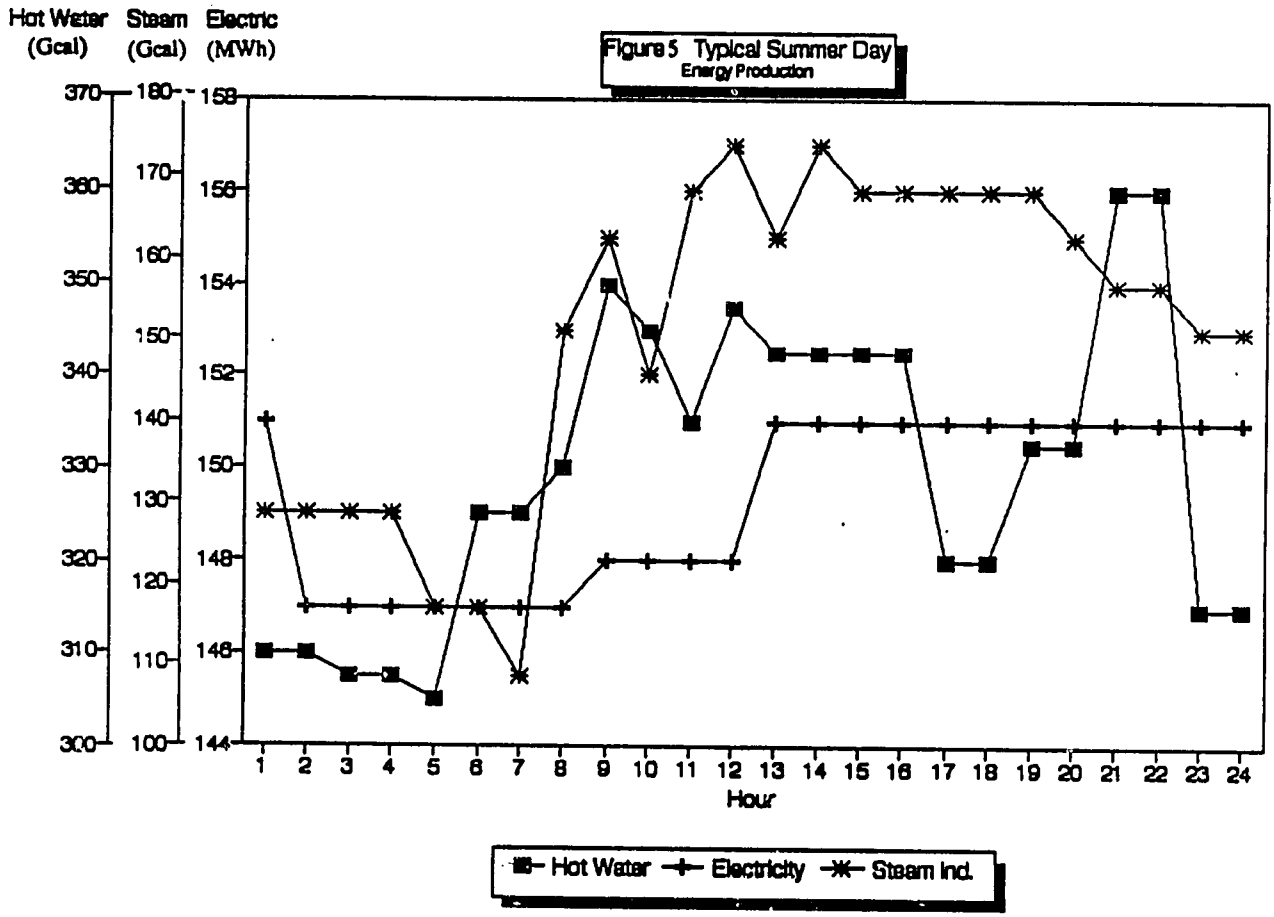

Figure 6. Typical Winter Day Energy Production

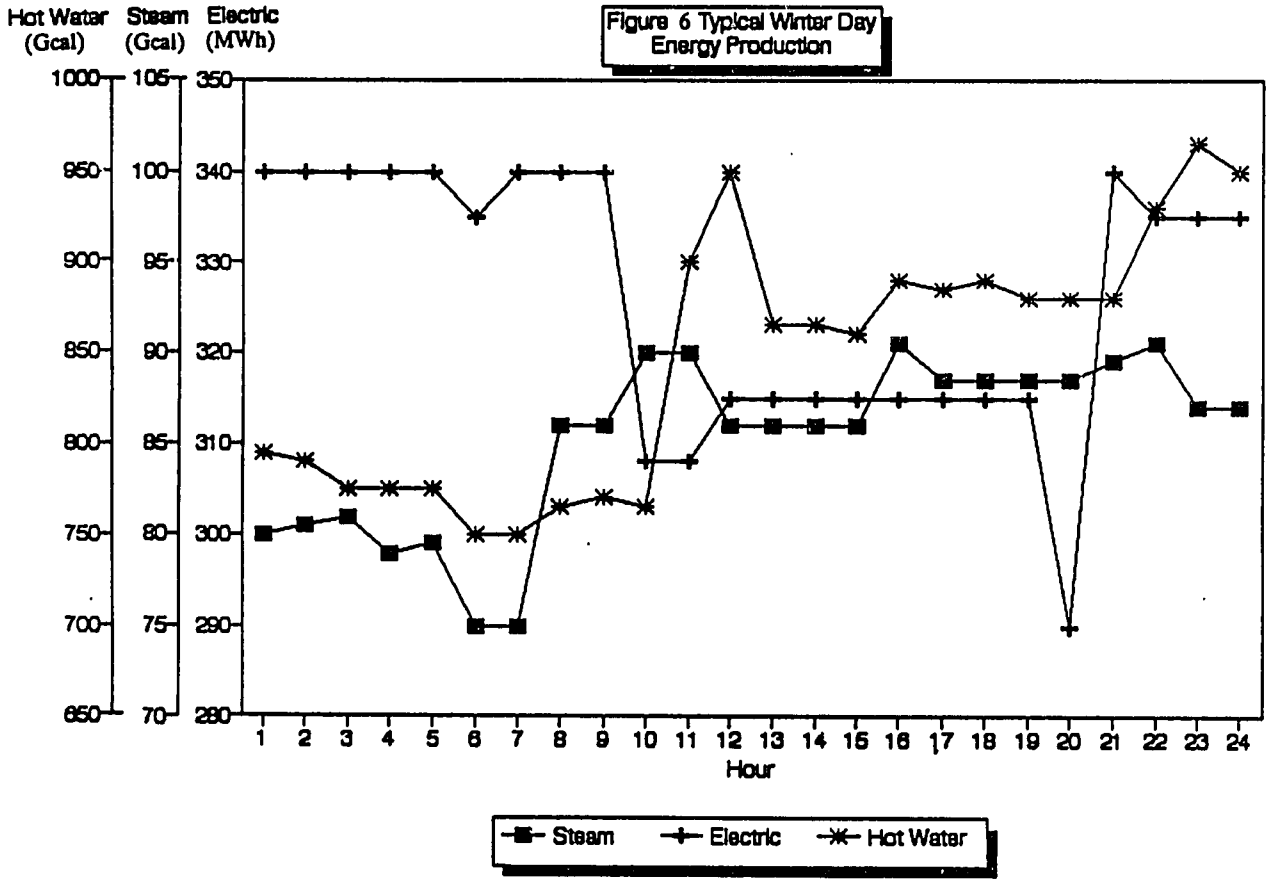

Figure 7. Typical Summer Day Fuel Consumption

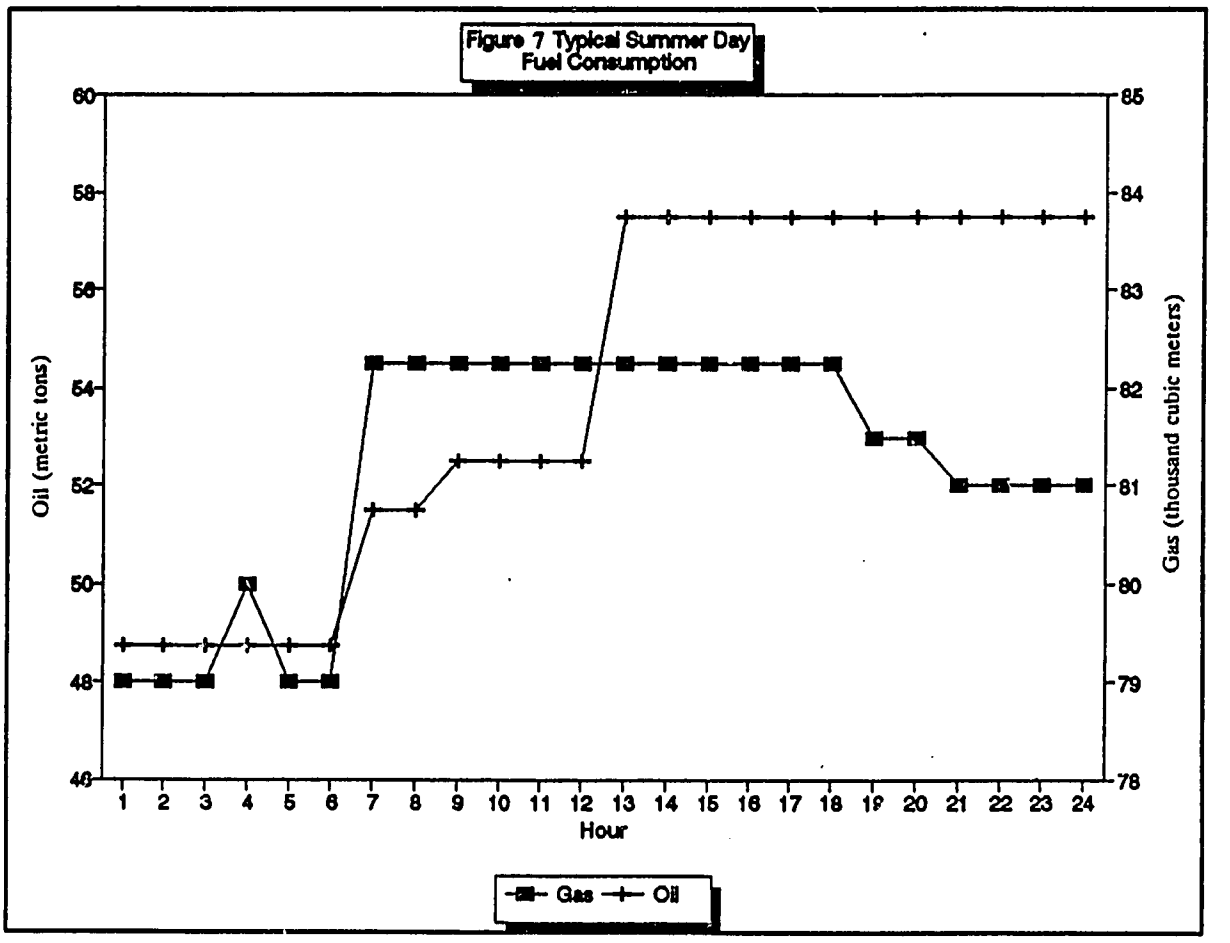

Figure 8. Typical Winter Day Fuel Consumption

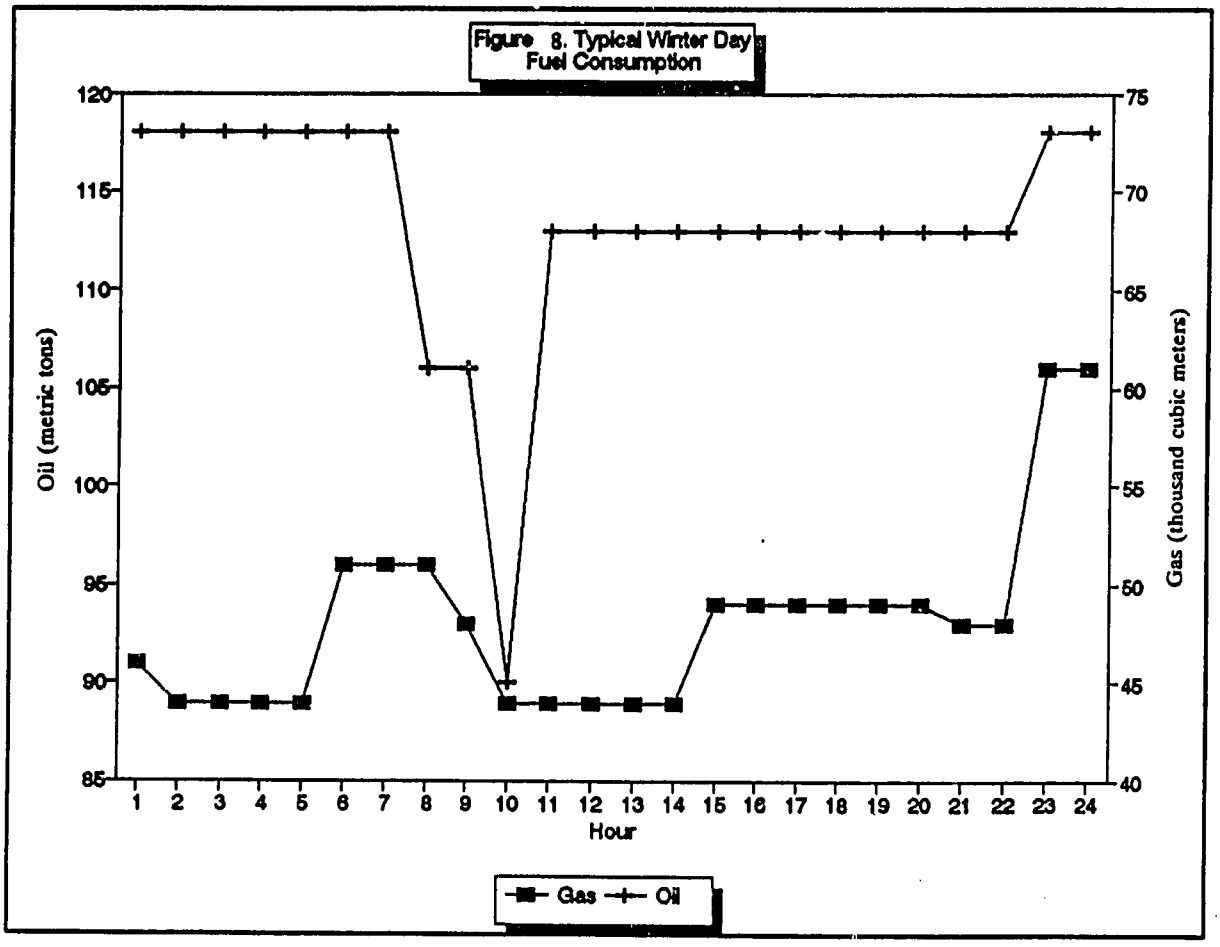

to the plant by rail and the delivery can be erratic. At times there may be only enough oil circulating in the system to avoid freezing up the oil pipes.

The profile of thermal energy delivered to the district system modulates between 710 and 770 Gcal/hr, while the delivered temperature of water is between 68 and 71 °C. The maximum temperature of water delivered to the system is 85 °C in the summer.

2.1.3 Energy Costs

The thermal energy costs 324 lei/Gcal to produce. The cost to produce electricity is 2.6 lei/kWh, while the industrial consumer buys it at 2.0 lei/kWh and the residential consumer buys it at 0.6 lei/kWh. In the past, the central government has provided subsidies to the cost difference. It is not clear what the government policy will be in the future.

2.2 District Heating System

The energy profile for the district heating system is directly tied to the individual loads on the buildings and apartments served. Officials of the Romanian Agency for Energy Conservation stated that the overall thermal resistance of the buildings was "the lowest in Europe". The buildings are typically made of concrete with no roof or wall insulation. In the last few years many people have added double pane windows to help maintain the temperature in their apartments. The estimated use of double pane windows was 80 to 90%. The typical apartment uses 9.1 Gcal/year, but would use 17 Gcal/yr if it was available.

The cost of the thermal energy from the plants to the distribution agency is 371 lei/Gcal. The selling price to the consumer is 510 lei/Gcal. This means that the typical apartment pays about 4641 lei/year for heating.

3.0 Audit Description

The power plant was the only facility that was physically audited. The information gained on the district heating system was obtained from diagrams and discussions with key personnel.

3.1 Summary

A pre-audit trip was made to the facility by the Energy Efficiency Component Team Leader. Discussions were held with key plant personnel and some areas were preliminarily selected as opportunities for increased energy efficiency. The audit team then spent one week focusing on this facility and the potential energy efficiency measures that could be implemented. Initially, the team had intensive discussions about plant operational history and determined the areas of highest potential for energy conservation measures. These areas were as follows:

- Boiler combustion control
- Atomization of fuel oil burners
- Oil residue on superheaters
- Fuel oil flow
- Water treatment and flow
- Corrosion of boiler ducting system

The audit of the power plant had certain unique aspects that surfaced early in the process. The personnel operating the power plant are very aware of their greatest energy efficiency problems and have demonstrated great ingenuity in keeping up the level of production throughout the years of limited access to spare parts. With the availability of accurate information, both about the plant operation and technological solutions, plant personnel would be in the best position to determine the proper course of action.

Therefore, the audit focused on determining the most appropriate instrumentation to obtain the accurate measurements required for an in-depth energy evaluation and the type of technical information required to make long-term energy efficiency decisions such as the complete replacement of a boiler. A plant tour showed that the plant is well maintained, and that there were no obvious maintenance problems such as steam leaks and poor insulation that required immediate attention. The main areas addressed by the audit were:

- Steam boiler area
- Boiler/turbine control rooms
- Boiler stack area
- Boiler combustion
- District water heating system.

3.2 Steam Boiler Area

The main problem brought out by the plant operator was the high degree of oil residue, which decreased the capacity of the boilers. Boilers #5 and #6 are rated at 525 metric tons/hr, but are only able to produce 350 metric tons/hr. This is a key concern because of the lack of thermal and electrical power capacity in Bucharest. The present method for reducing the residue is to shut the boiler down about once a year and mechanically (with hammers) remove the residue from the steam pipes.

Possible forms of treatment of the oil to reduce the sulfur and vanadium problems were discussed. Plant personnel had tried to treat the oil for about one month with MgO_2. But the available form of the chemical (somewhat waxy) made it too difficult to effectively use this method. No additives now are added to the oil before burning.

The oil burners for the boilers are also a problem. The nozzles are eroded gradually and need to be replaced every one to two months. The Russian boilers (#1-4) use 20 atm of oil at 145 °C with 6 mm holes to provide 1600 kg/hr. The Czech nozzles use 32 atm at 145 °C with 6.7 mm holes to provide 2000 kg/hr. Both use only mechanical atomization and need to be cleaned every two days. The oil filter used is a stack of wire mesh that has 25 holes per square centimeter. The poor filter system permits a high level of impurities to enter the boiler.

Another problem associated with the oil is the lack of oil meters. None of the counter type meters connected at the time of the audit were operational. Plant staff estimate oil use by the number of burners operating and correct the estimate the next day after the total oil use is determined.

3.3 Boiler/Turbine Control Rooms

There are separate control rooms for both the Russian and Czech boiler/turbine units. The control rooms monitor the operation including: steam pressures, steam temperatures, oil temperature, power output, reactive power (kVAr), and many other parameters. The Czech boilers have an instrument that did read oxygen when the probe was new and clean from residue. It was not functioning when the audit team was at the site.

There is no automatic control of the boilers to trim oxygen. The primary control strategy is to maximize output within the constraints of gas pressure and oil availability. Boiler combustion is maintained by the observation of flame color and the replacement of burner nozzles as assumed necessary.

The audit team toured the chemical lab that is used in testing the water, oil and combustion air samples. Orsat measurements are taken every four hours on the operating boilers, but the accuracy of these tests is not great. From a review of the readings in the log books for Boiler #6, the values seemed to be too consistent to be accurate measurements.

Carbon dioxide values were always very close to 12%, while oxygen varied between 3% and 4.5%. The values for carbon monoxide were always zero for all boilers.

3.4 Boiler Stack Area

The boiler stacks had very apparent corrosion problems from high sulfur oil and low stack temperatures. Plant staff has attempted to correct the corrosion problem by reducing the amount of air preheating they use. The corrosion causes high leakage into the duct system which further reduces the stack gas temperature and condenses more SO_2. Significant loss of preheating is therefore attributed to the use of high sulfur #6 oil. At the time of the audit, one of the stacks for the Russian boiler was being rebuilt because of corrosion damage. The Russian boilers were not made for high sulfur oil.

There are forced draft supply fans and induced draft flue gas fans for each boiler. For boiler #6, there are two supply fans at 600 kW with a rated capacity of 81.5 m^3/s and two flue gas fans at 1200 kW rated at 153 m^3/s. Each fan has an inlet vane control to modulate flow. To maintain the necessary pressures within the stack in boiler #6, the dampers to the induced draft fan were required to be wide open because of the pressure drop caused by the residue on the piping. This also meant that the ability to control combustion air into the boiler was severely limited. Plant staff claimed that after cleaning the steam piping this problem would be somewhat rectified.

3.5 Boiler Combustion

Because of the total amount of energy being used by the boilers, a fraction of a percent in combustion efficiency improvement would represent a considerable energy savings. Combustion analysis was conducted on four boilers at various stack locations, some before combustion air heat exchangers, and others after. The audit team took data after the heat exchangers, at the same location used by the plant lab, in an attempt to duplicate their readings.

The prime piece of equipment used and demonstrated was a portable combustion analyzer, which not only provided information necessary for efficiency calculations, but also gave data on pollutants and unburned hydrocarbons. This is much more than is being collected by the plant. In addition, infrared heat measuring instruments, digital thermometers, and a portable ultrasonic flow meter were used and demonstrated. After the first couple of measurements to insure accuracy of both instruments and techniques, the equipment was turned over to plant technicians who, with the assistance of the audit team, conducted the remainder of the tests. The results of the combustion tests are listed in the appendix and summarized in *Table 2*.

Table 2. Combustion Analysis Results

Boiler	Fuel	Stack Temp (°C)	Oxygen (%)	Carbon Dioxide (%)	Excess Air (%)	Efficiency (%)
1	Gas	251	5.4	8.7	32	85
4	Oil/Gas	180	13.0	6.4	150	82
5	Oil	180	8.6	9.9	66	85
6	Oil/Gas	180	12.3	6.9	138	81

These results show that the boilers were all operating below their design efficiency of 92% and the estimated efficiency of 89% stated by the plant personnel. The ability to improve the boiler combustion efficiency was therefore demonstrated.

3.6 District Heating System

The supply of hot water to the district heating system is monitored by measuring temperature, pressure and flow. The flow measurement uses an orifice plate type flow meter and is not accurate. The maximum temperature delivered to the system is 85 °C with a return water temperature of 45 °C. In the coldest weather and when fuel is low, the supply temperature can drop to 65 °C with the return water temperature at 25 °C. With this condition the apartments can only be heated to about 12 °C.

During a second visit to the district heating company, the present metering situation was discussed in more detail with the person in charge of metering. The present meters are at best 5% accurate, but usually much less accurate. To isolate leaks the staff needs accuracy below 1% over the full range of water flow.

Personnel expressed a need to eventually install meters on buildings that are provided with thermal energy. Billing is presently based on the thermal measurements taken at the distribution points; each apartment is then billed for an amount of potable water proportional to the number of people living there and for an amount of space heating energy proportional to its heating surface area. This obviously provides little incentive for individual users to conserve energy since the amount paid is not directly related to their consumption of energy. Ninety three hundred (9,300) meters would be required to establish the specific energy use for each building served. These meters would also assist in isolating leaks in secondary circuits.

4.0 Summary of Results

The results of the auditing effort include recommendations for both the power plant and the district heating system. For both of these systems, immediate and long-term actions are being recommended.

4.1 General Results

The results of the power plant audit emphasize increasing the efficiency of the cogeneration steam boiler system. One of the main problems with the boilers is the use of high sulfur/vanadium oil. The high residue from this oil left on the superheating coils for the steam drastically reduces heat transfer from the combustion air, thereby greatly reducing boiler capacity. Additional problems caused by the high sulfur content in the oil include corrosion of the ducts following the air pre-heaters and air pollution.

Significant deposits of impurities in the hot water boilers cause drastic reductions in boiler capacity. The piping for the hot water boilers lasts about three years before it needs to be replaced. The water treatment capacity at the plant is 400 metric tons/hr, but leaks in the district heating system lose 600 metric tons/hr of the water that should be returned to the South power plant. Therefore, much of the make-up water goes through the system untreated.

The control of the boiler combustion air is manual, with limited input from orsat analysis of combustion air. The inefficiency caused by this type of control and the limitations caused by the residual problem were clearly evident from the audit team's combustion air measurements.

The main area of inefficiency in the district water system is the many leaks in the piping. Detecting these leaks could significantly reduce the water and thermal leaks. The other major problem is monitoring the system well enough to determine where improvements should be made.

4.2 Recommended Short-Term Measures

4.2.1 Bucharest-South Combined Heat and Power Station

The recommended immediate action is the acquisition of instrumentation that will provide the plant personnel the information necessary to optimize plant efficiency. Once the proper tools are available to pinpoint inefficiency problems, the staff have the knowledge necessary to justify and decide on possible adjustments within the other operating constraints.

1. Combustion Analysis

The use of a combustion analyzer with sulfur dioxide measurement capabilities and draft pressure readings is recommended to allow the boilers to run closer to the optimum excess air for the type of fuel used. The sulfur dioxide measurement will provide accurate information and prompt corrective action to reduce corrosion, increase equipment life, and reduce air pollution. In addition, two hand held combustion air analyzers are recommended to service the hot water boilers. These units would permit easier access to the information necessary to keep the boilers running efficiently under changing conditions.

Using the results of the combustion analysis, the average combustion efficiency was 85% for gas and 82% for oil. It is estimated that with adequate combustion monitoring, the efficiency of gas burning could reasonably increase to 88% and the combustion efficiency of oil burning to 86%. With this efficiency increase, the annual savings would be:

Energy saved:	440,000 Gcal
Gas saved:	20.5 million m^3
Oil saved:	28,000 metric tons
Total cost saved:	169 million lei ($4.84 million at 35 lei/$)

This is about half of the annual budget for repairs and maintenance allocated each year. The economic justification and payback is as follows. (See equipment specifications for details on equipment.)

Combustion analyzer:	$5,260
Hand-held analyzer(x2)	$1,588
Total	$6,848

Based on the energy savings calculated for the increase in efficiency from using this equipment, the payback would be less than one day.

2. Fluid Flow Measurement

Figure 9 shows the general layout of the oil piping to the six steam and sixteen hot water boilers. No measurement of fuel flow to individual boilers is presently available. The counter-type meters have all been inoperative for more than five years. The rough measurement of oil use is based on the number of oil burners being used. The staff use an average flow for a burner and multiply times the number of burners used. Then the next day they try to correct the flow rate based on the total amount of oil used.

This rough method results in the use of oil burners and boilers that are not functioning properly or efficiently. The operator cannot determine which burners or boilers are most efficient to use. With proper flow data the optimal arrangement of burners and boilers can

Figure 9. General Layout of Oil Piping

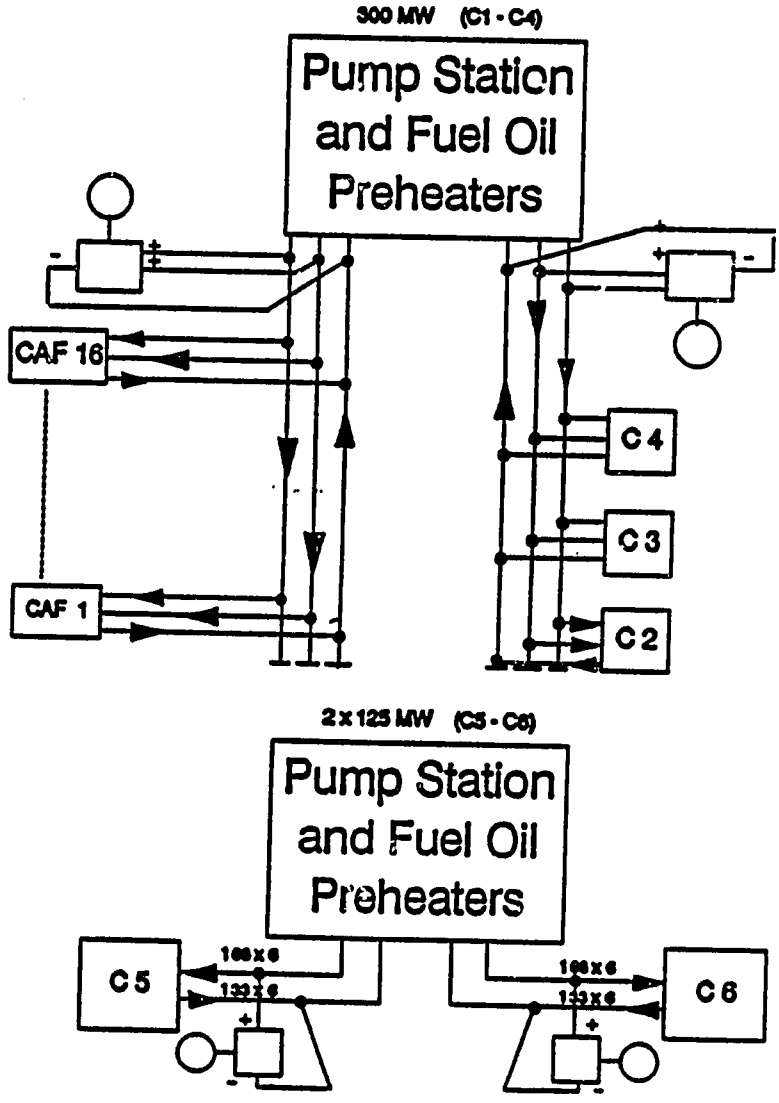

be operated. It is estimated that this would increase the efficiency by at least 1%. The overall combustion efficiency for oil was measured at 82%. With an increase in efficiency of 1% from utilizing the best burner combination, the annual savings would be:

Energy saved:	64,000 Gcal
Oil saved:	7,000 metric tons
Total cost saved:	28 million lei
	($800,000 at 35 lei/$)

The fluid flow measuring device would ideally be able to concurrently track flow through three different pipes. Because of budget limitations, a portable flow meter is being supplied which can readily move among the three pipes to be measured. The specifications are listed in more detail in a latter section. The economic justification for the equipment is as follows.

Flow Meter:	$7,700

The payback of this measure based on the calculated energy savings would be about one week.

3. Pipe Insulation

The pipe insulation was not in bad shape, but there were areas where the insulation had either gotten wet or had eroded away. The energy lost due to poorly insulated areas would vary depending on the severity of the insulation degradation and the pipe temperature. An infrared temperature sensor and a hand held digital thermometer are effective tools to identify poorly insulated areas. From the temperature readings obtained with the sensors, the plant personnel can easily justify the appropriate insulation level and repair. The estimate of energy lost from the steam pipes due to these areas is at least .5%. The calculation of energy savings from reducing these losses by 50% on the steam pipes is:

Energy saved:	10,000 Gcal
Oil saved:	1,100 metric tons
Total cost saved:	4.3 million lei ($124,000 at 35 lei/$)

The cost of this measure includes an infrared temperature sensor, a hand held digital thermometer and three different probe types for fluid and surface readings. The economic justification for the equipment is as follows:

Infrared Temperature Sensor	$2,187.35
Hand Held Digital Thermometer	$619.75
Total Cost	$2,807.10

The payback for this measure based on the calculated energy savings would be about 10 days.

4. Electric Load Reduction

There are many electric motors operating within the plant for equipment such as fans and pumps. The fan motors for just one of the steam boilers are 600 and 1200 kW. They operate with inlet vane control on the air flow, but it may be economical to switch one or both to variable speed drive (VSD) control in the future. The tool necessary to make the analysis to justify a VSD or other motor controls is a power analyzer. With a power analyzer the plant can monitor the actual load on the fan motors, or other motors, over a week or longer in order to obtain enough data to prove the economics of any changes. Partially loaded motors can be inefficient and contribute to a low power factor. Without a power analyzer there is no accurate method to determine motor loads over an extended period of time and, therefore, no way to demonstrate a justification for energy conservation actions.

To illustrate the potential savings from using the power analyzer and a computer to analyze the data, the possible savings from installing a VSD on the boiler fans will be estimated. The savings for installing a VSD can be significant, but strongly depend on the profile of the fan load over a typical day or week. Hence the need for a power analyzer for this analysis. A rough estimate of the possible savings can be made assuming a bell shaped curve from 0 to 100% load for the boiler fans. With this type of curve, the savings achieved by changing from an inlet vane system to a VSD system will be from 11 to 14%. The use of a VSD system for the fans from one boiler would save annually:

Electric Savings:	643,500 kWh
Cost Savings:	1.3 million lei
	($36,771 at 35 lei/$)

The power analyzer requires an IBM-compatible computer and appropriate software to effectively use the data to justify energy efficiency projects. The economic justification of this recommendation is as follows:

Power Analyzer	$5,700
PC computer	$3,100
Total	$8,800

If the price of the VSD system is included, the cost would be about $200,000 which would give a payback of 5.4 years.

4.2.2 District Heating System

The audit team recommends that the plant reduce water and thermal leaks in the system. The leaks in the system are the largest energy efficiency problem that can be rectified in a relatively short period. The system personnel certainly know how to fix the leaks; the problem is locating them. An infrared video camera would be a useful tool to locate these leaks, but is unfortunately beyond the project's budgetary scope. A portable flow meter is being supplied to the system operators, to help them isolate leaks and begin to balance the system.

An estimated 1200 cubic meters of water are lost each hour, which is 2% of the overall flow. Assuming that the leaks are evenly distributed along the supply and return paths, the average temperature of the lost water for the year would be 55 °C. If leakage was reduced by 50%, the annual savings would be:

Energy Saved:	81,000 Gcal
Oil Equivalent:	8,804 metric tons
Cost Savings:	35 million lei
	($1 million at 35 lei/$)

The instrumentation required to balance the system is an important priority. This recommendation will be just the first step to reducing leakage and developing efficient control of the distribution. The economic justification is as follows:

Ultrasonic Flow Meter:	$8,655

The payback based on the energy saved by identifying and eliminating 50% of the leakage would be about one week. This does not include the cost of repairing the leak once they are found, but it also does not include the savings in water treatment costs or the costs of pipe damage due to low treatment capacity.

4.3 Recommended Long-Term Measures

4.3.1 Bucharest-South Combined Heat and Power Station

This plant is presently burning high sulfur oil with high impurities in boilers not designed for such fuel. In addition, the thermal load has been increased beyond the design capacity, thereby exceeding water treatment capacity. These two factors are virtually destroying the plant. The sulfur condenses out in the heat exchangers, air ducts, and stack as sulfuric acid, and is very destructive. Some preheaters have had to be taken out of service in order to attempt to raise the flue gas temperature above the dew point. This decreases overall efficiency by several percent. The vanadium quickly coats the boiler tubes, restricting air flow to the point that combustion control through combustion air adjustment is not possible. The untreated hot water is slowly coating the inner surfaces of hot water supply lines many kilometers in length.

1. Reduce Sulfur/Vanadium Levels in Oil

All the above problems have a direct impact on energy efficiency. Therefore, the first recommendation is to either provide adequate fuel oil treatment for each plant using the high sulfur oil, or provide a higher grade of oil from the refinery. This will have the largest impact on energy efficiency of any recommendation.

2. Reduce Water Treatment Requirements

The water treatment problem for the thermal operation is the next problem that needs attention. Since the load is already above the capacity of this plant, the first recommendation is that the Thermal Energy Distribution Company look at balancing this overload and evaluate where the least damage will occur from overloading. They already have plans to complete a loop with the system so balancing can be done. The next recommendation is to evaluate increasing water treatment capacity.

3. Automatic Combustion Control

Once the fuel problems are solved so that the boilers can be properly controlled for efficiency, automatic combustion controls should be installed on all boilers. This will assure the proper excess air continuously for all boilers.

4. Improve Burners

Combustion nozzles should be improved by either a new system such as compressed air, or an improved design of the present configuration with better materials. Combustion gas analysis indicated the presence of carbon monoxide in the flue gas, which is directly related to the inefficient operation of the nozzles. Better filtration techniques would decrease erosion of the nozzles.

There was mention of a plan to replace some of the boilers within the next few years because of their age and condition. Some of these recommendations will have to be evaluated in light of this.

4.3.2 District Heating System

For the thermal energy distribution, an energy management control system would be the most valuable addition to the system. In the interim, measuring instruments that will help in flow measurement, heat loss, and leak detection will assist in both better control and energy efficiency of the operation, and will also provide necessary data for a more advanced control system.

4.4 Replication Potential

There are five power plants located in the Bucharest area and many other power plants similar to the South Bucharest power plant in Romania. The South power plant produces a maximum of 450 MW while all of Romania produces about 4,300 MW from gas and oil. This power is produced 60% from oil and 40% from gas fuel. The country's power production is about 10,500 MW. In addition to the other power plants, there are many industries that produce power and have large steam boilers. The audit team met briefly with the manager of another power plant in Brazi. His concerns matched very closely the efficiency problems discussed at the South Bucharest plant.

4.5 Pricing and Policy Issues

The main constraint on pricing of fuel is the lack of control due to large importation from the USSR. Romania uses 25,000 metric tons/day of oil. Only 24% of this oil is from Romania and this is low sulfur oil. The remaining 76% of the oil is imported and is high sulfur oil. The consumption of gas by power plants is about 29 million m^3/day on the average. Almost 69% of this gas is from Romania, while the rest is from the USSR. There are shortages of both fuels, especially in the winter, with resulting factory shutdowns.

Because of the severe shortage of oil and gas at times and the lack of thermal and electrical capacity exhibited in Bucharest, there is a need both to increase fuel availability and to reduce overall demand. One recommendation which will have a large short-term impact is the development of incentives for building and factory owners to save energy and reduce demand. The first step may be to start billing demand charges. In addition , RENEL should consider developing a "demand side management" program, such as the type used by utilities in the U.S., that provides energy conservation investment incentives to consumers. Another strategy would be to give price breaks on fuel to industries that utilize cogeneration. This would encourage the installation of more efficient cogeneration systems.

4.6 Specifications of Recommended Equipment Purchases

4.6.1 South Power Plant

1. Combustion Analyzer

ENERAC 2000
RS-232 Port/Internal modem
220 Volt/50 Hz
SO_2 sensor
NO_x sensor
Estimated Cost $5,260.80

The combustion analysis indicated that the efficiency of the boilers could be significantly increased. Boiler efficiency can be increased up to 8% in the oil fired boilers by using a combustion analyzer to determine the actual excess air during operation.

2. Two Portable Combustion Analyzers

Oxygen sensor
Carbon Monoxide sensor
Maximum temperature: 1000 °C
Estimated Cost $1,588.00

These will be used primarily to check steam and water boiler efficiency to provide information for manual adjustments to air/fuel ratio.

3. Infrared Temperature Sensor

Digital heat spy
Temperature range: 0 to 1000 °C
Estimated Cost $2,187.35

The best instrument to quickly and accurately determine surface temperatures of pipes and other vessels is an infrared temperature sensing "gun". From the additional temperature information that this sensor will provide, it will be very easy for the plant personnel to make the calculations determining the economic justification of adding insulation.

4. Hand-held Digital Thermometer

Thermometer
Surface probe
Immersion probe
Gas probe
Estimated Cost $619.75

The digital thermometer should provide capability for measuring surface and fluid temperatures to 1000 °C. This instrument will allow determination of existing sensor accuracy as well as temperature information for improved control and justification for process charges.

5. Portable Ultrasonic Flow Meter

Primarily for oil flow measurements
Maximum flow: 103 cubic meters/hour
Oil density: 0.974 ton/m^3
Temperature range: 120 - 160 °C
Maximum pipe O.D.: 219 mm

Normal pipe thickness: 6 mm
Should have memory totalizing capability
Estimated Cost $7,700.00

This meter will primarily be used to measure oil flow into the boilers to assist in analysis of boiler efficiency and conservation project specifications.

6. Portable Power Analyzer

DRANETZ
Maximum voltage: 600 volts
Memory (one week, with 15 min. readings)
Measure: volts, amps, VArs, power factor, power
Ability to download to PC/spreadsheet
Hard copy printout
Estimated Cost $5,700.00

This power analyzer will be used to measure loads on electric end-use equipment to assist in technical and economic justification of conservation projects.

7. Portable PC Computer with Printer

EPSON Laptop Computer
Lotus Software
Letter quality printer
Estimated Cost $3,100.00

The main use of the portable PC will be to download data from the Dranetz meter and the combustion analyzer to facilitate analysis. Software will be available to manipulate the data to perform technical and economic justification for energy conservation projects.

4.6.2 District Heating System

1. Portable Ultrasonic Flow Meter

Primarily for water flow measurements
Maximum flow: 12,000 cubic meters/hour in one pipe
Temperature range: 0-150 °C
Steel pipe
Maximum pipe O.D.: 120 mm
Estimated Cost $8,700.00

This meter will primarily be used to measure water flow from the power plant and returning to the plant to isolate leakage to the system.

5.0 Plant Management and Organization

5.1 General Description

The technical staff of the South Bucharest Power plant is concerned almost exclusively with keeping the plant operating at all times at the highest level possible. This situation is created by both the decline of the capacity of the power plant and the increased load, both for thermal and electrical energy.

The organizational structure consists of the manager and the following departments: Chemical water treatment, boilers, turbines, electrical generation, and electrical controls. Each department is headed up by an engineer who has two technicians and a number of workers ranging from 30 in the electrical controls to 170 in boilers. The total number of employees is around 800. There is no question that the manager and his staff are technically competent. Under conditions of very limited technical resources and capital, they have exercised ingenuity in keeping production as high as it is. They already know what should be done to increase the efficient use of energy. Because the load already exceeds design capacity, energy may be used more efficiently but cannot be reduced in total usage.

Funding comes from the Center for Production of Thermal and Electrical Energy. The budget consists almost exclusively of funds for repair and maintenance. Staff reported that this submitted budget is usually cut in half by the Center which is typical of the budgeting process. There are no requests for funding of energy conservation projects, and there are three major reasons for this. First, because of the limited capital in the country, it may be unrealistic that such projects would be funded. Second, plant staff do not have the instrumentation necessary to collect data for an economic analysis of such projects. Third, staff may not have training to do such an economic analysis.

Approval of requests for funding is currently based primarily on complaints registered by various sectors. The whole economic system seems to be based on this process. It would be interesting to see if the priority would improve for projects supported by economic justification and payback calculations.

The present major concern for the power plant is the availability of energy. The oil is brought in by railroad tank cars on a daily basis, and the quantity on hand sometimes is measured in hours of operation. This mode of operation consumes most of the management's time. Staff are also kept busy by maintaining the plant, as it is steadily destroyed by the type of fuel used and the inability to treat all of the water in the system due to system overload.

5.2 Recommended Actions to Promote Energy Efficiency

The power plant, like all other companies and organizations, needs one focal point for its energy management effort. This would make it much easier both to collect and to analyze energy data, as well as to receive outside resources. An energy management program established at the plant could provide this focus.

The organizational structure of the program would consist of an energy manager and an energy coordinator in each department. These are part-time functions, but would initially consume a great deal of time. The energy manager should be trained in established techniques for managing energy, and then conduct some training for the coordinators. The ultimate goal is to develop a priority list of energy projects, from no-cost measures to major capital investment. The priority would be based on a number of things such as payback, availability of capital and political aspects, both internal to the company and external.

In order to reach this point, it is first necessary to establish a baseline of energy usage, showing the quantities and flows of each type of energy. In most cases this will require additional instrumentation which will probably not be immediately available, but can be identified and prioritized by the energy manager.

6.0 Implementation Phase

The implementation phase of the audit involved a return trip to the facility from July 23 to 26, 1991. The main objective of this phase was to facilitate the installation and use of the equipment purchased for the facility based on the previously discussed recommendations. The distribution of the equipment to the site was performed by the Romanian Ministry of Industry. A representative from the Ministry was also involved during the activities of this phase. The key elements of this phase were:

1. Distribution of portable measuring instrumentation
2. Training for plant staff
3. Installation of fixed energy efficiency equipment
4. Review of draft audit report with plant staff
5. Monitoring of equipment
6. Discussion of past and future conservation activities
7. Development of a specific plan for equipment utilization.

A draft of the audit report containing sections 1.0 through 5.0 was provided to the Ministry and plant staff for their review prior to the site visit.

6.1 Summary

All equipment was received and distributed by the Ministry before the end of the implementation phase. Ministry personnel at the site included Mr. Popa and Mr. Stanescu. Equipment training was completed for the plant staff who would use the equipment. Demonstrations of the power analyzing equipment included "down loading" the power data collected to the EPSON PC. Software on the computer was demonstrated, including techniques in developing audit reports and project justification. All equipment was calibrated and tested for accurate performance. For this facility there was no fixed equipment recommended or purchased.

The draft audit report was reviewed with the plant manager Mr. Sofran. In general, he felt that the report was especially good in outlining the basic problems in the accuracy of the energy consumption figures or calculations of the energy savings listed in Section 4.0. The plant has taken a number of steps to improve energy efficiency that are similar to those recommended in the audit report, but most were initiated before the audit was performed. The equipment implementation plan developed by Mr. Sofran outlines the methods and frequency with which the plant will use the equipment to reduce their energy use.

6.2 In-Country Review of Draft Audit Report

The audit report was reviewed with the plant manager, Mr. Sofran. He felt the facility's energy consumption figures and energy savings calculations supporting the recommendations were accurate. He found the identification and description of the recommendations relating to the plant's efficiency problems particularly informative. Management felt that the

estimates of the energy savings from the recommendations were useful, and illustrated the great need for capital investment in the types of equipment recommended.

Management suggested no additional changes to the list of areas of highest energy saving potential listed in Section 3.0. They felt that the descriptions of the areas in this section captured the primary operational and efficiency problems facing the plant. They did question why the efficiency for the boiler did not correspond to the efficiency numbers that they had seen from the ENERAC combustion analyzer. We explained that some of the readings from the combustion analyzer included preheat temperatures, and some of the boilers were operating on both gas and oil. Consequently, the ENERAC efficiency had to be adjusted manually.

Management agreed with all of the recommendations made in Section 4.0 and noted that they are presently insulating pipe sections where the insulation is visibly bad. The temperature sensors provided will allow them to more effectively identify areas requiring further insulation. They wondered if they might use the power analyzer to record the electronic signal received from the steam meters and thereby record steam use with the power analyzer. After further defining the specifications of the power analyzer, we all determined that this would not be an appropriate application. They did agree that the power analyzer would be very useful in other applications related to electric equipment monitoring.

Long-term recommendations were also discussed. The facility personnel and the Ministry representatives felt that reduction of the sulfur and vanadium levels in the oil was a national problem that would more effectively be addressed at the oil refineries. They said that the recommendation of automatic combustion control may not be appropriate for some of the boilers due to their age and plans to replace them, but new boilers should be equipped with this type of control.

6.3 Energy Efficiency Measures Adopted by the Facility

The plant management is very interested in reducing energy costs and have implemented several energy efficiency measures. The primary measure performed each summer is the identification and replacement of worn insulation on pipes. A ten person team is responsible for finding the worn areas and repairing the insulation. Another measure they are testing, that was discussed in the long-term measures, is the use of steam atomization for one of their oil fired boilers. This will permit both a reduction in the oil temperature required and a more complete combustion of the oil under varying load conditions. They obtained a Romanian made steam atomization burner from another power plant in the area. After comparing drawings of the burners with those from U.S. manufacturers, the audit team concluded that the burner operation is similar.

The plant is also using a Romanian made soot blower on one of their oil fired boilers. They received this soot blower from a power plant in the area. The staff is interested in observing the performance before they include blowers on other boilers. They plan to use

the combustion analyzer to help them quantify the improvements from using the soot blower. The blowers should reduce the build-up on the superheater coils, allowing better heat transfer and increased efficiency.

Plant staff is also installing a new hot water boiler with a soot blower and a greater distance between pipes to allow better heat transfer and fewer blockage problems. The boiler will also be equipped with steam atomization and automatic control to maintain proper temperature.

Another measure discussed in the long-term recommendations is the implementation of an increase in water treatment capacity. They plan to install four more cationic filters, bringing the total number of filters to 18, which will allow them to treat about 25% more water, or a total of 650 m^3/hr. They are also planning to replace the cationic material in the other filters.

6.4 Management Results

The plant had not made any changes to the management structure since the initial audit visit. They felt that the structure they have in place presently can perform the functions described in the recommendations adequately. Restructuring of their energy personnel may take some time to enact since they are still closely controlled by government agencies such as the Central Industries Producing Electric and Thermal Energy (CIPEET). This agency is in charge of monitoring the energy consumed and produced by the plant, and is also responsible for setting the goals for average power produced and efficiency of energy production. Two people are presently responsible for data collection to document the plant's performance.

Plant performance affects the salary of every worker at the plant. For instance, if the plant is required to produce 200 MW on average every month and produces an average of 10% less at 180 MW, the salary of each employee is 10% less than usual. They also have set goals for production efficiency that establish the level of fuel use per unit of electric output and fuel use per unit of thermal output. There is also a set level of electric energy that the plant can consume: about 10 percent of the electric energy produced.

Each power plant is given a different set of production and efficiency goals. Recently budget goals were added. As mentioned earlier, the plant employees are penalized if they do not meet these goals, but they are not rewarded if they exceed these goals. Further, if the goal is exceeded, the next months goal is then raised to reflect this achievement, forcing the plant to work harder the next month to meet the higher goal.

This is not the most effective way to motivate personnel to optimize energy efficiency. In addition, because the budget is allocated by RENEL, it is hard for the plant to justify capital expenditures for improvements that may have good paybacks. The limited capital that RENEL has restricts the types of projects it can fund to the higher priority projects related to maintaining energy production, and not energy efficiency.

6.5 Implementation Plan

At the beginning of the week-long site visit, Mr. Sofran was asked to develop a utilization plan for the equipment his facility was receiving. During the week, issues were raised as the equipment was tested and training performed. The following is the plan that was developed:

1. ENERAC Combustion Analyzer

   In order to delay the ENERAC's deterioration, the plan will minimize its use. It will be given to the thermic automization lab. The device will be used to check the economical functioning of the six boilers. The performance checks will be carried out as follows:

   At each boiler, approximately five readings will be taken: in the furnace chamber; at the upper part of the boiler or after the superheater; and before and after the air preheaters for the right and left sides. Each boiler performance check will be made once per week.

   On the basis of these readings, the excess air, the proper fuel to air ratio, and the air infiltration along the burnt gas line will be optimized. Actions may include replacement of defective oil burners or restoring seals at air preheaters.

2. Portable Combustion Analyzers

   One of the devices will be used at the power plant's 16 hot water boilers. The 6 to 10 boilers are used in the wintertime only. The device will be used daily (about 10-12 measurements per day) and measurements will be carried out after thermic load changes and burning conditions stabilize in order to minimize excess air. The device will be given to the staff working each shift. The second portable device will be given to the thermic automization lab and will be used to check the accuracy of the shift personnel's work.

3. Ultrasonic Flow Meter for Oil

   The device will be given to the staff carrying out flow measurements in the thermic automization lab. Daily measurements of oil flow on the steam and hot water boilers will be carried out. In order to establish conditions for replacing the burner nozzles and the minimum duration (in days) after which the burners must be steam cleaned, the flow for each burner must be checked daily for 3 to 4 months. Four burner/boilers must be chosen and their flow measured.

   When the flow at one burner is too high, the nozzle will be replaced because the erosion has increased the nozzle diameter. When the oil flow at one burner is too small it will be cleaned to remove residuals. The time duration for nozzle replacement or cleaning will be more precisely known after data is collected.

4. Temperature Sensors

The infrared and handheld temperature devices will be used for temperature readings of the thermal insulation of steam pipes and burnt gas ducts related to the steam boilers. The places where thermal insulation must be improved will be established.

5. Computer and Power Analyzer

The following will be established with the use of the computer:

- Lists for checking the repairs at each key component (boiler, turbine, generator), actual repairs and deficiencies found, and replaced spare parts.
- Monitoring of equipment, especially of those with higher wear, like bearings.
- List of parameters at each piece of repaired equipment, before and after repair.
- List of materials and spare parts necessary for repairs of key components.

With the power analyzer:

- Measurements of internal electric consumption so the plant can determine proper measures required to reduce energy consumption.

The computer will be kept in the Plant Manager's office and all Chiefs of boilers, turbines, electric and automization divisions will be allowed to work with the computer. A photograph of the training for this computer is in Appendix B.

6. Ultrasonic Flow Meter

The central district heating will use the water flow meter to determine the flow on their bigger pipes to help in balancing the system. There are no meters now. This meter will be especially helpful when changing from summer to winter operation, and should reduce their problems associated with low flow at the farthest points in the system. The ultrasonic flow meter is shown in a photograph in Appendix B.

6.6 Expected Energy Savings

The expected energy savings are difficult to predict primarily because of the uncertainty in the type and degree of corrective action usually taken once the instruments are used to measure performance. The corrective action may depend on a capital expenditure that is not available.

Use of the combustion analyzers to monitor the steam and hot water boilers is expected to increase efficiency by 4% overall. This would result in a savings of 440,000 Gcal of energy for the plant. The oil flow measurements is expected to increase the efficiency of the boiler operations by 1%. This is a savings of 64,000 Gcal.

Using the temperature sensors to more closely monitor insulation requirements is expected to save 10,000 Gcal of energy or a conservative .25% of the steam produced. The computer and power analyzer can be used to justify many projects such as a variable speed drive on the forced draft fan of a boiler which could save 643,500 kWh each year. For the central district heating system, the water flow meter can be used to improve the distribution of hot water in the system and possibly save 1% of wasted thermal energy, which corresponds to 81,000 Gcal.

APPENDIX A
Brazi Power Plant Addendum

Brazi Power Plant Addendum

A follow-up visit was made to the Brazi power plant at the request of RENEL officials. The purpose of the trip was to compare the findings at SUD with another combined power station.

Plant Description

The plant primarily supplies power and thermal energy to the very large and nearby oil refineries. It also provides power to the national grid and thermal energy for the city of Ploiesti.

The installed capacity at the plant is 910 MW of power and 400 and 500 Gcal/hr of thermal energy. The following table relates the stages on which capacity was added.

Stage	Year	Boilers	Fuel	Turbines
First	1961	4 X 420 metric ton/hr	Gas	4 X 50 MW
Second	1972	2 X 675 metric ton/hr	Oil/Gas	2 X 200 MW
Third	1973	2 X 420 metric ton/hr	Oil	2 X 105 MW
Fourth	1975	1 X 420 metric ton/hr	Oil	1 X 50 MW
Fifth	1986	1 X 420 metric ton/hr	Oil	1 X 50 MW

The second stage uses condensing turbines and can be operated by gas as the "emergency fuel" to provide 50% capacity. They also have six hot water boilers rated at 100 Gcal/hr each.

They do provide steam directly to the refinery at a capacity of 600 metric tons/hr at 16 bar with 260 °C and 100 metric ton/hr at 35 bar with 420 °C. They also have a very low condensate return of only about 20% from the refinery. The refineries consume about 60 to 80 MW of power.

They have no possible way to measure the fuel delivered to the boilers and therefore are also in need of metering equipment like the South Bucharest plant.

Plant Energy Issues

We did not have the time to get a complete profile of the energy produced and consumed by the plant. The gross numbers for the year were 2.4 billion MWh sold to the electric grid and 5.5 million Gcal sold for industrial and district heating purposes. About 60% of the thermal energy goes to the refinery, 2% goes to other industrial users, and the 20% goes to the district heating systems and greenhouses.

They try to maximize the output of electricity. Although, while we were at the plant, the total electric power was around 450 MW, or half of their capacity. The reason for this was the lack of gas fuel and the inoperative condition of some of the boilers. One boiler was shut down due to steam leakage caused by corrosion.

The selling price of electricity to the grid and to the refinery is 956 lei/MWh. Therefore, the refinery is buying electricity at half the price usually charged to industrial users. The selling price of steam to the refinery is 556 lei/Gcal. The selling price of thermal energy to the district heating system is 415 lei/Gcal. Their price for oil went from 4,000 lei/ton to 4,700 lei/ton on April 1st.

The power factor for the refinery is about .90 and they are not penalized by the power plant for this power factor. There are two on-peak electric periods, from 6 to 9 am and from 6 to 10 pm during the week. But they have no meter to measure the electric use as a function of time of day so the peak use is estimated. This provides no incentive for the industries supplied to reduce their actual peak use.

They apparently do not have the extreme problems with the high sulfur and high vanadium fuel oil. They are able to better maintain their boilers than the South Bucharest plant because they can shut them down more often and reduce soot build up. The preheater uses an on-line soot blower to maintain its surface. Like the South Bucharest plant, they tried to use MgO_2 treatment on the oil, but had trouble with precipitates in the oil.

Boiler Combustion Tests

They preform ORSAT analysis daily and claim an average efficiency of the boilers at full load of 91.5% and at 65% loaded of 90%. We tested one boiler that was burning 100% oil. The combustion efficiency measured was 87.4%. The percent excess air was only 9% and there was basically no carbon monoxide. This was considerably better efficiency and performance than measured at the South Bucharest plant, although it was still below the measurements obtained by the ORSAT readings and assumed by the operators. The better performance may be due to the better ability of the plant to maintain their boilers. They have the ability to shut down their boilers more often for maintenance.

APPENDIX B
Photographs

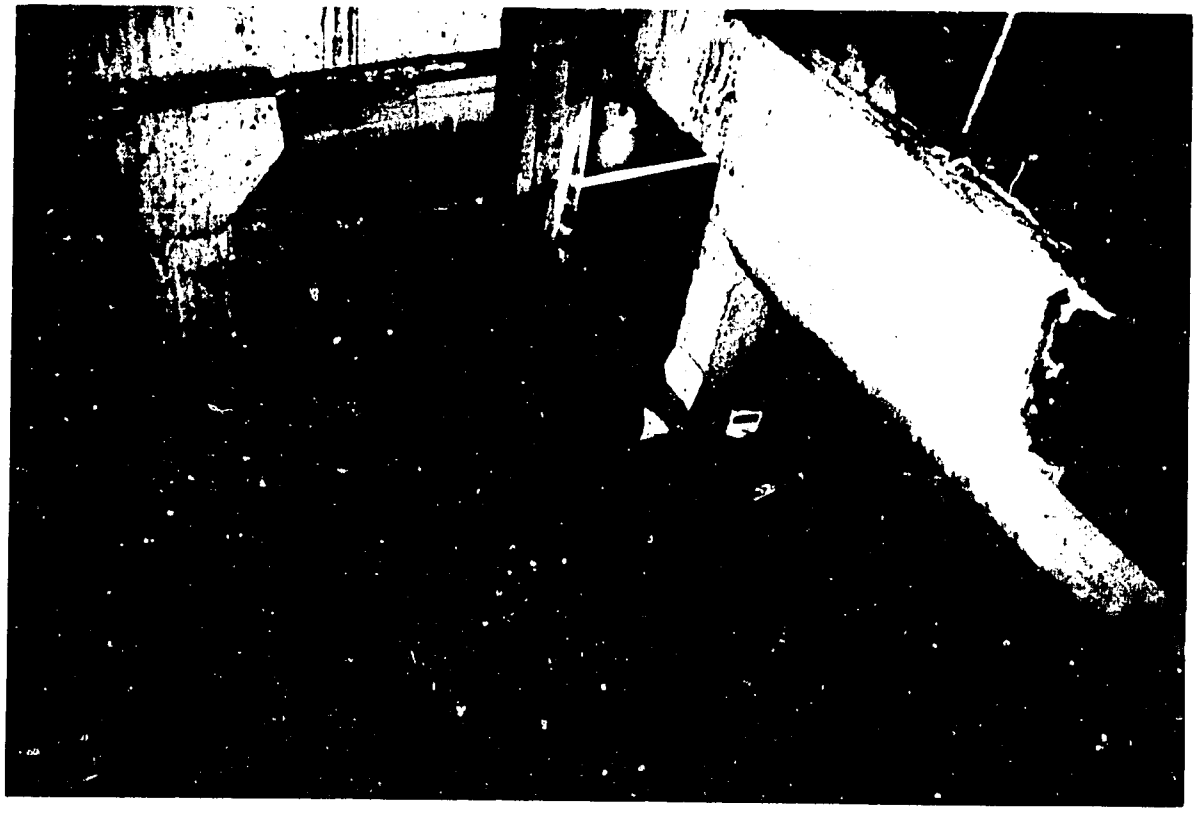

1. Plant staff use the large uitra-sonic flow meter to measure thermal water flow from the plant.

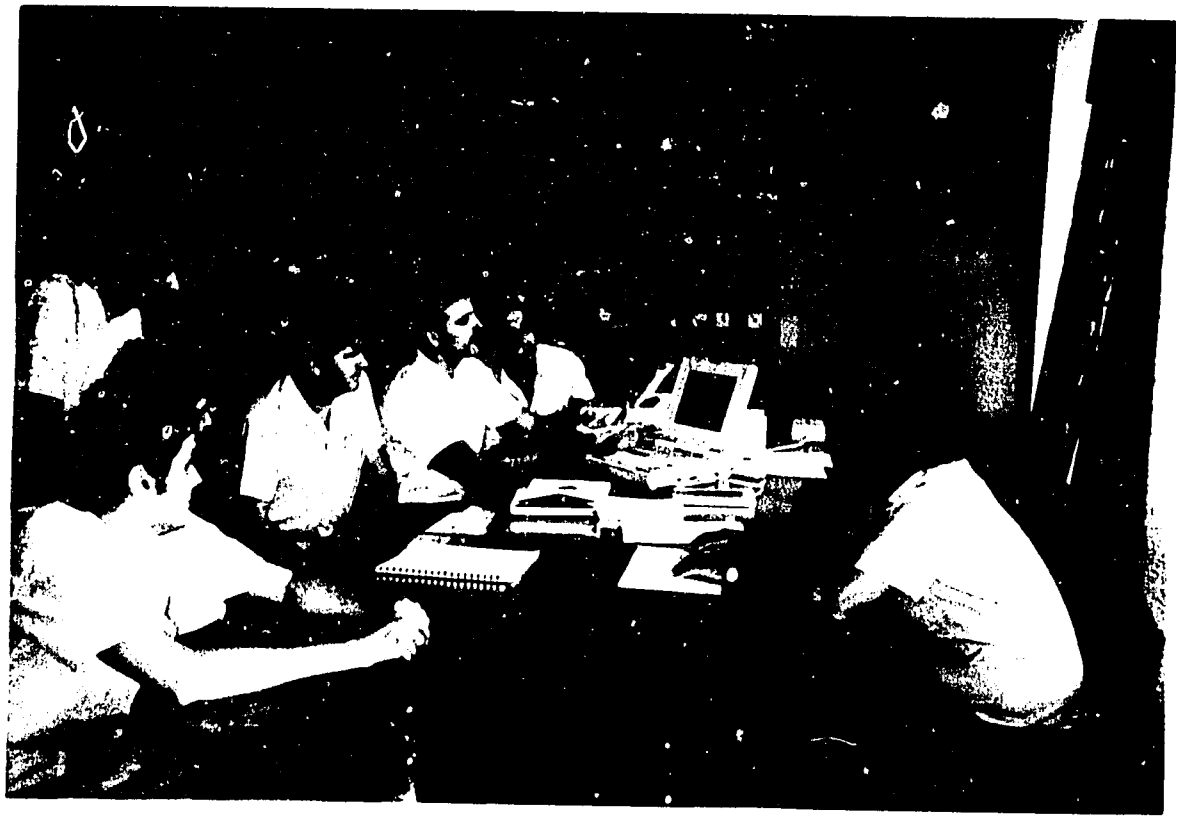

2. Mr. Nicol demonstrates and provides training on the portable computer and software to Mr. Sofran, Mr. Galani, Mr. Popa, plant staff and RENEL staff.

APPENDIX C
List of Abbreviations

AC	= alternating current
amps	= amperes
atm	= atmosphere = 14.696 pounds per square inch
bar	= 100,000 pascals = 14.504 pounds per square inch
BTU	= British thermal unit
cfm	= cubic feet per minute
cm	= centimeter = 0.3937 inches
cm^2	= square centimeter = 0.155 square inches
CO	= carbon monoxide
CO_2	= carbon dioxide
DC	= direct current
°C	= degree CelsiusT [°C] = 5/9*(T[°F] - 32)
°F	= degree Fahrenheit
°R	= degrees Rankine T[°R] = T[°F] + 460
eff	= efficiency
ex air	= excess air
Gcal	= gigacalorie = 1 billion calories = 3.968 million BTU
GJ	= gigajoules = 1 billion joules
gph	= U.S. gallons per hour
gpm	= U.S. gallons per minute
GWh	= gigawatt hours = 1 billion watt hours
H_2	= hydrogen
H_2O	= water
H_2SO_4	= sulfuric acid
hectare	= 10,000 square meters = 2.471 acres
hectoliter	= 100 liters = 26.42 U.S. gallons
Hg	= mercury
hr	= hour
Hz	= hertz = cycles per second
J	= joules
K	= Kalvin
kcal	= kilocalories = 1 thousand calories = 3.968 BTU
Kcs	= 29.77/$1 US
kg	= kilogram = 2.2046 pounds
Kgcc	= 7,000 kcal = 27,776 BTU
kJ	= kilojoules = 1 thousand joules = 0.947813 BTU
km	= kilometer = 0.621 miles
kN	= kilonewton = 1 thousand newtons
kPa	= kilo pascals = 1 thousand pascals = 0.14504 pounds per square inch
kV	= kilovolts = 1 thousand volts
kVA	= kilovolt-amperes
kVAr	= kilovars = 1 thousand volt-amperes (reactive)
kW	= kilowatt = 1 thousand watts
kWh	= kilowatt hour = 1 thousand watt hours
lbs	= pounds
liter	= 0.2642 U.S. gallons = 0.03531 cubic feet
m	= meter = 39.37 inches

m^2	= square meter = 10.76 square feet
m^3	= cubic meter = 35.31 cubic feet
mA	= milliampere = 0.001 amperes
metric ton	= 1 thousand kilograms = 1.1023 U.S. tons
mg	= milligrams
min	= minute
MJ	= megajoules
mm	= millimeter = 0.03937 inches
MPa	= 1 million pascals = 145.04 pounds per square inch
MVA	= megavolt-amperes
MW	= megawatt = 1 million watts
MWh	= megawatt hours = 1 million watt hours
NG	= natural gas
nm	= nanometer
Nm^3	= cubic meters at standard conditions of temperature and pressure (20°C and 1 atmosphere)
NO_X	= nitrogen oxide
O_2	= oxygen
P	= pressure
PC	= personal computer
PF	= power factor
ppm	= parts per million
psi	= pounds per square inch
psig	= pounds per square inch (gauge)
R	= thermal resistance
s	= second
SO_2	= sulfur dioxide
sq ft	= square feet
Tcal	= teracalorie = 1 trillion calories = 3.968 billion BTU
T	= temperature
V	= volts
VArs	= volt-amps (reactive)
VSD	= variable speed drive
W	= watts
yr	= year