PN-ABL-041
76718

ENERGY EFFICIENCY AUDIT REPORT

TOFA ALBRECHTICE
Albrechtice, Czechoslovakia

JANUARY 1992

PREPARED BY: RESOURCE MANAGEMENT ASSOCIATES OF MADISON, INC.
Madison, WI

and

ENERGOPROJEKT
Prague, Czechoslovakia

U.S. EMERGENCY ENERGY PROGRAM FOR EASTERN AND CENTRAL EUROPE

U.S. AGENCY FOR INTERNATIONAL DEVELOPMENT
BUREAU FOR EUROPE
WASHINGTON, D.C. 20523

ENERGY EFFICIENCY AUDIT REPORT

TOFA ALBRECHTICE
Albrechtice, Czechoslovakia

JANUARY 1992

PREPARED BY: **RESOURCE MANAGEMENT ASSOCIATES OF MADISON, INC.**
520 University Avenue
Suite 300
Madison, WI 53703
(608) 283-2880

and

ENERGOPROJEKT
EGP 22000
Bubenska 1
170 05 Praha 7
Czechoslovakia
42-2-6835024

U.S. EMERGENCY ENERGY PROGRAM FOR EASTERN AND CENTRAL EUROPE

U.S. AGENCY FOR INTERNATIONAL DEVELOPMENT
BUREAU FOR EUROPE
OFFICE OF DEVELOPMENT RESOURCES
ENERGY & INFRASTRUCTURE DIVISION
WASHINGTON, D.C. 20523

USAID Contract EUR-0015-C-1

Table of Contents

i. Executive Summary 1

ii. Description of Energy Efficiency Program 4

1.0 Plant Description 5

2.0 Plant Energy Profile 8

3.0 Audit Description 16

4.0 Summary of Results 17
- 4.1 Short-Term Energy Efficiency Opportunities 17
- 4.2 Long-Term Recommendations 19

5.0 Plant Management/Organization 23

6.0 Implementation Evaluation 24
- 6.1 Repair of Leaks and Addition of Insulation to Steam System 24
- 6.2 Automatic Control Valves to Control Building Heating 24
- 6.3 Future Evaluation of Results 24
- 6.4 Energy Management 25
- 6.5 Miscellaneous 25

List of Tables

Table 1. Summary of Energy Savings 3
Table 2. Energy Consumption and Costs for 1990 8
Table 3. Boiler Combustion Analysis 20

List of Figures

Figure 1. Plot Plan 6
Figure 2. Material Flow Diagram 7
Figure 3. Energy Use Diagram 9
Figure 4. Steam, Condensate Return, and Boiler Schematic Diagram 12
Figure 5. Compressed Air Schematic Diagram 13
Figure 6. Electric Schematic Diagram 14
Figure 7. Future Tofa Factory Energy Use Diagram 15
Figure 8. Potential System for Handling and Processing Waste Wood 22

List of Appendices

Appendix A
Calculations for Uncontrolled Building Heating

Appendix B
Calculations for Steam Leaks & Vents

Appendix C
Calculations for Uninsulated Piping

Appendix D
Calculation for Improvement from 60% to 80% Condensate Return

Appendix E
Heat Recovery from Lumber Drying Kilns

Appendix F
Air Balance on Production Building No. 2

Appendix G
Heavy Oil Burner Modification Specification

Appendix H
Miscellaneous

Appendix I
Photographs

Appendix J
List of Abbreviations

i. Executive Summary

The countries of Eastern Europe face unprecedented changes in both their political and economic systems. To aid in the transition to market economies, the U.S. Agency for International Development (USAID) designed the Eastern Europe Emergency Energy Program. Resource Management Associates of Madison, Inc. (RMA) is the technical assistance contractor for the Industrial Energy Efficiency Program in Czechoslovakia. RMA was provided valuable assistance by two in-country subcontractors: 1) Stredisko pro Efektivni Vyuzivani Energie (SEVEn), in the plant selection and in-country logistics; and 2) Energoprojekt in the audit and equipment installation work.

Czechoslovakia faces severe energy problems including uncertain oil supplies, pollution from coal, and questions about the future of nuclear energy. The Czechoslovakian industrial sector has experienced large increases in energy prices, the latest in January, 1991, bringing energy costs in line with world energy prices. At the same time, the country has embarked upon a fundamental economic structural reform. The US Agency for International Development established the Industrial Energy Efficiency Program to help mitigate the impacts of increased energy costs on the industrial sector by providing technical support through energy audits and economic support, and through purchase and installation of energy conservation equipment in selected representative industrial plants.

As part of this program, an energy audit was conducted at the TOFA Albrechtice in Albrechtice, Czechoslovakia. The factory produces piano actions, wooden jewelry, and wooden toys and games. Demand for their piano actions and wooden toys is high, which makes this a very viable industry.

Energy Audit

The TOFA plant energy audit was conducted during the period of March 18-22, 1991. Steam, electrical, wood waste and space heating systems were examined to determine viable opportunities for energy saving improvements. Results of the audit showed four areas of immediate improvement which could reduce the plant's fuel oil consumption by 33.7%, as shown in *Table 1*. Steam leaks could be reduced by the elimination of uncontrolled process steam vents, repairing holes in pipes and sealing leaking flange connections. Uncontrolled building heat could be eliminated by the addition of temperature regulating control valves to the heat radiators. Insulating hot pipes would also result in energy savings. Energy in the form of warm air could be recovered from the wood dryer exhaust with an air-to-air heat exchanger. This air could then be used for space heating. Other opportunities exist for further energy conservation, but based on the audit, these four areas could be implemented quickly and demonstrate relatively short payback periods.

Several long-term opportunities for energy conservation were also discovered. The audit team examined the existing heavy oil burner and recommended replacing the pressure atomizing nozzle with a steam or compressed air atomizing nozzle (including a new fuel regulator). The improvement in combustion would increase combustion efficiency by at

least 5%. Although the boiler burners will be replaced in 1992, the savings in fuel (93.2 metric tons/yr, 335,340 Kcs/yr) makes this an attractive option. TOFA has developed a five year plan to modify the boiler burners, change primary fuels, change the wood drying process, and add thermal storage to handle low loads on weekends. The factory has plans to switch from heavy oil to natural gas as the primary fuel in 1992.

TOFA also plans to replace one of the existing 12 metric ton/hr boilers with a 4 to 6 metric ton/hr boiler. The smaller boiler will handle the low summer season heating demand where as the larger boiler will operate during the fall and winter. This is a common strategy to optimize multiple boilers and each boiler's efficiency versus the load demand. For example, a 12 metric ton/hr boiler operating at 6 metric ton/hr output would typically have a 65% overall efficiency, whereas a 6 metric ton/hr boiler operating at 6 metric ton/hr would typically have a 75% efficiency. Potential fuel savings is 79 metric ton/yr (284,400 Kcs/yr), making this an attractive long-term option.

Audit emphasis was placed on existing systems which would not be significantly affected by TOFA's future plans. The four low-cost energy saving improvements could be implemented immediately. TOFA management is very interested in energy conservation as evidenced by their enthusiasm and support during the energy audit visit.

Implementation Phase

A follow-up visit to the TOFA plant took place July 25 and 26, 1991. The status of the installation of energy efficiency equipment was reviewed. Section 6.0 describes the status at the time of the follow-up visit. The auditors also assisted plant staff in preparing a case study of TOFA for the Industrial Energy Efficiency Seminar. RMA was notified by the local sub-contractor subsequent to the follow-up visit that all equipment installation has been completed.

Table 1. Summary of Energy Savings

Description	Energy Lost GJ/year	Fuel Savings metric tons oil/year	Fuel Savings Kcs/year	$/Year
Steam System Leaks (1)	14,796.1	484.8	1,743,877	59,114
Uncontrolled Building Heating (2)	2,249.8	86.0	309,582	10,494
Wood Dryer Exhaust Heat Recovery (2)	994.1	38.0	156,978	5,321
Uninsulated Piping (2)	791.4	21.2	76,264	2,585
Total	18,831.4	630.0	2,286,701	77,514

Notes: Total energy lost represents 33.7% of the steam production for 1990 (86,807 GJ or 82,297 million BTU).

Total fuel savings represents 31.5% of the fuel consumption for 1990 (1,863 metric tons or 2,054 U.S. tons).

Fuel cost for heavy oil: 82.6 Kcs/GJ ($2.95/million BTU).

(1) denotes maintenance and repair items to be completed by TOFA

(2) denotes items which are specified in Section V, Section VII and the Appendices. These items are to be purchased during this project.

ii. Description of Energy Efficiency Program

Czechoslovakia's industrial sector is well developed and contains many large and heavy industries. However, there are many medium size industries within the country that consume a large percentage of the industrial energy used. Many of these industries are made up of multiple companies and plants within the country, making them ideal targets for industrial energy audit work because of high potential replication. Many of these medium-size plants are quite viable, but have not yet implemented energy conservation activities.

Increases in energy prices to equivalent world prices have put additional pressures on industrial firms to conserve energy. Changes within the economic system (increasing energy prices, privatization, etc.) will necessitate increased energy efficiency and reduced energy intensity of production. The Industrial Energy Efficiency Program will train Czech managers and engineers in energy efficiency measures and practices, as well as in energy management. This training will demonstrate the benefits of energy conservation and illustrate the advantages of making all employees aware of energy waste.

The Industrial Energy Efficiency Program is based on four distinct tasks:

1. Industrial plant screening
2. Industrial plant energy audit
3. Policy analysis
4. Implementation.

Fifteen industrial plants were screened and eight were selected to be audited. Criteria used in this selection included:

- opportunity for energy savings (with a focus on oil savings)
- potential replicability of energy saving options in similar plants or systems
- future viability of the plant in the changing economy
- size of the plant
- other activities such as joint ventures or other bi-lateral aid projects.

The energy audit activity, described in detail in this report, determined the overall energy efficiency of the plant, which was used to identify no/low cost equipment opportunities with short-term payback. An assessment was made of the technical and management capabilities and capital investment decision-making processes regarding energy conservation applications. Preparation of equipment specifications and other documents required for procurement of U.S. equipment or materials completed the audit.

In the implementation phase, equipment specified in the energy audit was procured, cleared through customs, and delivered to the plant. Also, requirements for installation of the material were identified. Where possible, this was done by plant personnel, or alternatively, by CSFR contractors. Following installation, the effectiveness of the energy conservation application was evaluated.

1.0 Plant Description

TOFA Albrechtice is located at: 468 43 Albrechtice v Jizerskych Horch (North Bohemia), Czechoslovakia. The factory produces wooden products such as piano actions, costume jewelry, toys and games. TOFA started in 1929 by producing yo-yos and other wooden toys. The factory currently employs 520 people. TOFA has approximately 100 million Kcs in sales per year, of which 70% is sales of piano actions.

The plant operations are directed by:

Mr. Miroslav Polak, Director
Mr. Jiri Hubner, Technical Director
Mr. Peter Hubner, Power Engineer

The plant phone numbers are (0428)65541 and fax (0428)65509.

The TOFA factory consists basically of a main production building, power house, piano action production building, machine shop, administrative offices, fuel oil storage/pumping station and a waste water treatment system. The factory also owns and operates a canteen (cafeteria building), several residences, and several apartment buildings (block flats), as shown on the facility plot plan, *Figure 1*.

Manufacturing Process Description: (piano actions and other wooden products.) TOFA purchases wood logs (beech, maple, and hornbeam), coarse cuts them into 20" x 2" x 8" pieces, and sorts the pieces. The wood is further cut into smaller pieces, stacked, and dried in indirect steam heated dryers. The dry wood is then planed and cut to specific dimensions. For the piano actions, the wood is further processed with specialized machines to produce the refined shapes and intricate mechanisms. Individual actions are assembled and combined with other actions on an assembly line to form a complete keyboard scale (without the keys). The individual shapes for the other wooden products are manufactured with a series of multi-blade cutting machines, drill presses, joiners and routers. Individual parts are then painted, assembled and packaged for the consumer. The material flow through the manufacturing process is shown in *Figure 2*.

Wood processing produces a large quantity of wood dust and chips, which is evacuated through an air exhaust system consisting of individual suction ducts at each machine, a collection header, exhaust fans, and cyclone dust collectors.

The factory is currently operating at or near capacity, which is 120 piano actions per day (27,000/ yr). For all wooden products, the factory consumes 5,958 cubic meters of wood per year. Actual wood products account for only 20 to 22% of the raw material, the remainder being waste wood of which some is utilized as fuel in the boilers. The factory currently operates one shift (5:30AM-2:30PM), five days per week.

Figure 1. Plot Plan

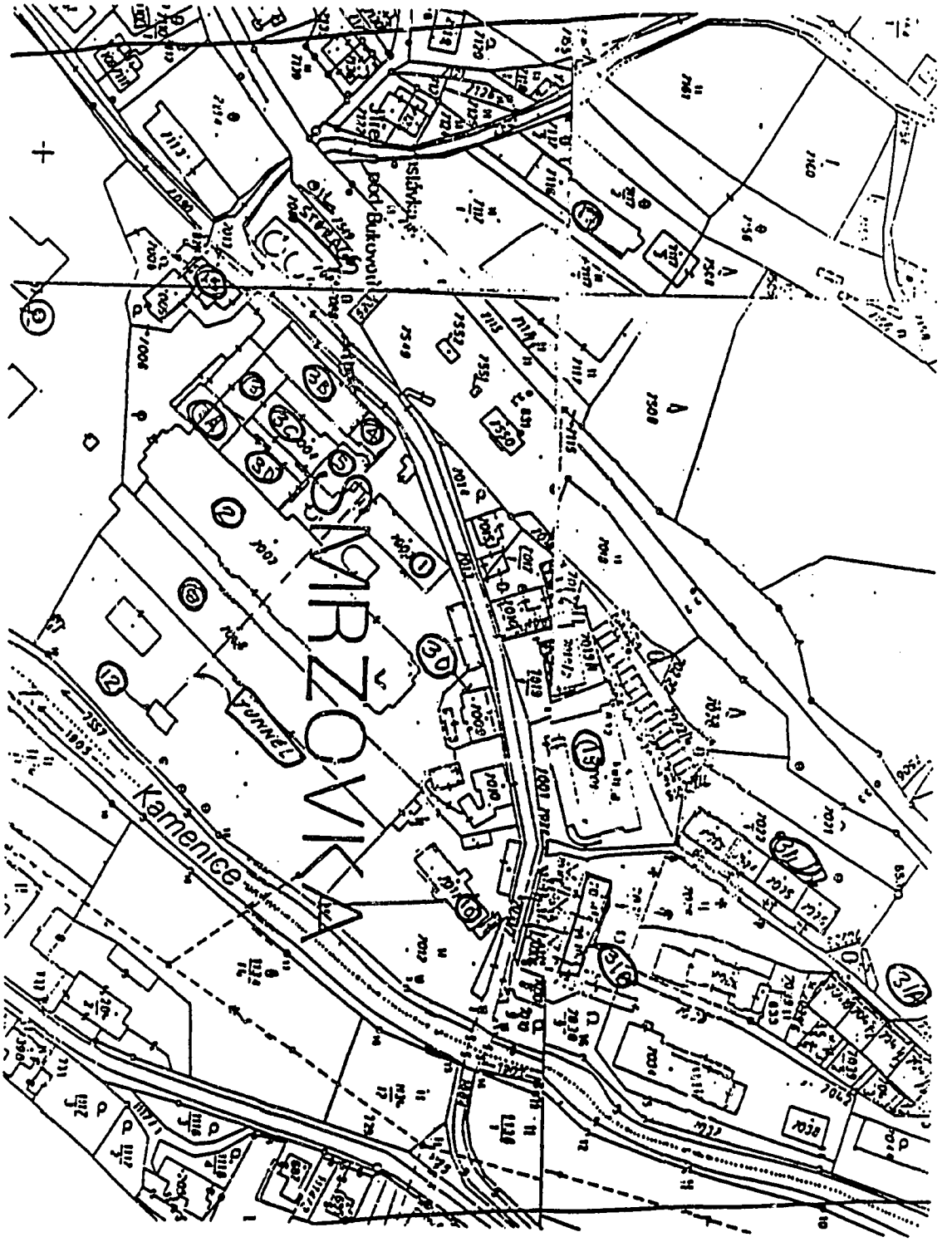

Figure 2. Material Flow Diagram

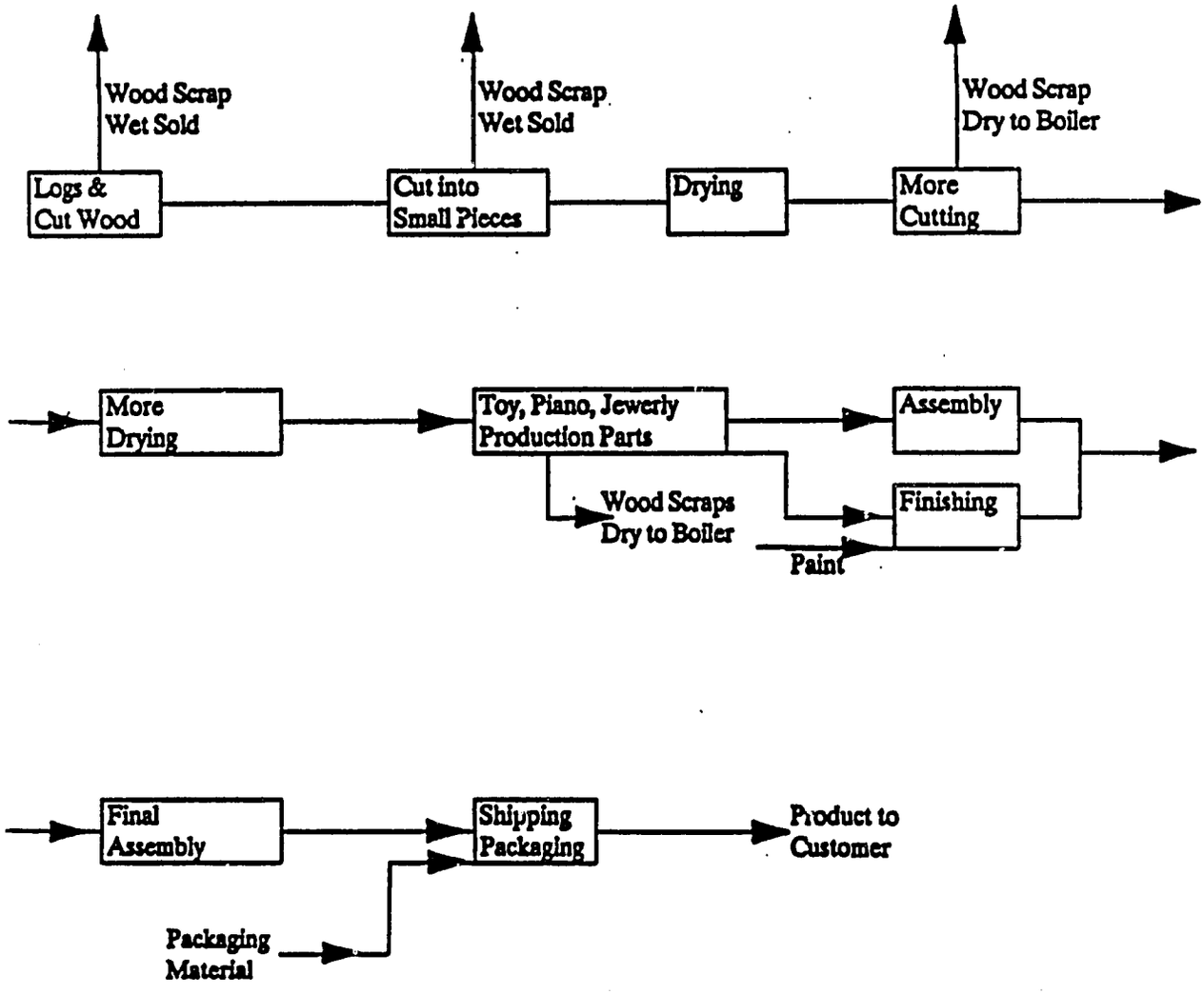

2.0 Plant Energy Profile

TOFA utilizes waste wood, heavy oil and electricity for the production of piano actions and other wood products. The majority of the waste wood and heavy oil demand is for space heating the factory and surrounding buildings while the majority of the electrical demand is for operating the production machines and for the power house (as shown in the *Factory Energy Use Diagram, Figure 3*).

Table 2 contains the annual fuel and electrical profile for 1990. The fuel oil consumption follows the heating season through the year with a peak in January of 270 metric tons and a low in July of 50 metric tons. Fuel availability during the winter and reduction of sulfur dioxide and particulate emissions are the primary reasons TOFA plans to switch to natural gas as their primary fuel. Prices paid by TOFA for heavy oil were 1,700 Kcs/metric ton (January to July), 2,760 Kcs/metric ton (August to November), and 3,600 Kcs/metric ton (at present). TOFA has two large storage tanks which provide them the capability to store a 45 day supply of heavy oil. Electrical consumption remained steady throughout 1990.

Table 2. Energy Consumption and Costs for 1990

Month	Waste Wood Metric Ton	Heavy Oil Metric Ton	Fuel Oil Cost, Kcs	Electric kWh	Electric Cost, Kcs
January	263	270	459000	231800	127667
February	287	230	391000	211400	118382
March	288	185	314500	192800	111859
April	190	150	255000	216000	121193
May	174	150	255000	221800	123044
June	178	70	119000	218300	127759
July	118	50	85000	157800	107487
August	182	100	276000	233400	134010
September	169	140	386400	233500	138188
October	221	130	358800	223200	130248
November	239	160	441600	236900	140520
December	174	228	629280	202100	193993
Total	2483	1863	3970580	2579000	1574350

Waste wood price: Unknown, by-product of manufacturing
Average heavy oil price (Kcs/metric ton): 2131.3 (US $65.54/US ton)
Average electric price (Kcs/kWh): 0.61 (US $.02/kWh)

Figure 3. Energy Use Diagram

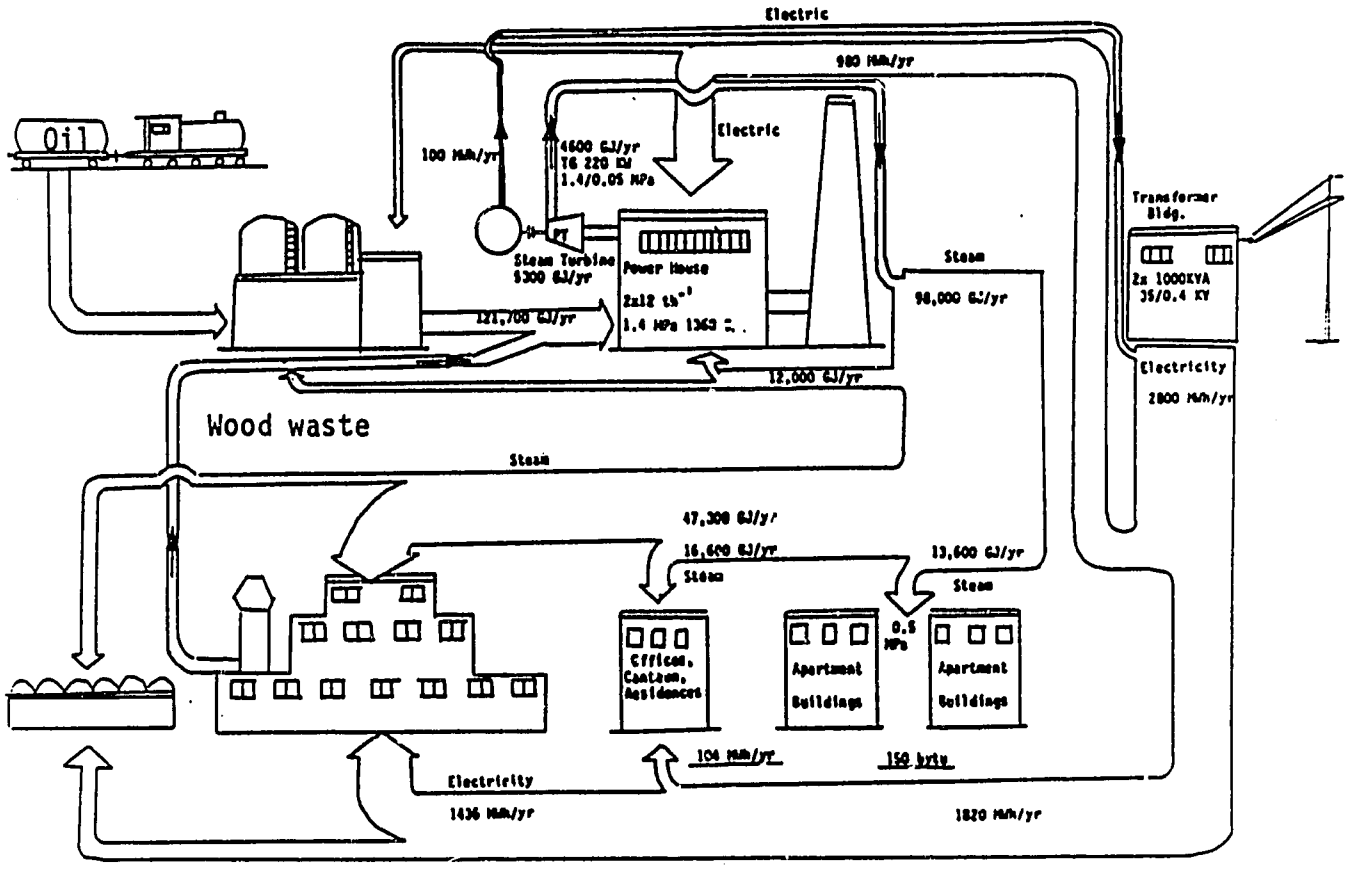

TOFA produces steam utilizing two 12 metric ton/hr boilers and burning waste wood (in the form of sawdust, chips and cut-offs) and heavy oil (see *Figure 4, Steam, Condensate Return, and Boiler Schematic Diagram*). The boilers produce superheated steam at 1.4 MPa for use in a 220 kW steam turbine electric generator. The steam is de-superheated with water to 0.5 MPa to provide heat to the apartment buildings indirectly through a hot water circulation system. The steam is further regulated to 0.05 MPa to provide the remaining space heating and process heating (lumber drying and fuel oil heating) requirements. The boiler feedwater system consists of a sand filter, ion exchange water softeners, and deaerator. The boilers were originally installed in 1939 and produced 98.000 GJ of steam heat for 1990. TOFA estimates 60% of the steam condensate is returned to the boilers from the plant distribution heating system. The audit team was unable to verify the condensate flowrate but suspects their figure is high. Condensate is collected in several tanks throughout the factory property and pumped to the main condensate tank. A portion of the condensate is used to preheat the feedwater. The boilers are also equipped with continuous flash blowdown economizers. The low level steam produced is utilized in the deaerator.

Combustion air is preheated to 150 °C by radiant energy from the wood burner and by the boiler exhaust flue gases. The boilers are watertube type boilers capable of firing waste wood chunks in a lower chamber, waste wood powder and chips in the furnace, and heavy oil through two burners also in the furnace. Waste wood chunks are manually fed through a trap door in the floor onto a series of cast iron flights in the boiler. Combustion air is blown up through the bed and the combustion products enter through an opening in the furnace floor. The waste wood powder and chips are collected from the factory and conveyed to a cyclone separator located on the powerhouse roof. The powder and dust is then augured into a blower and injected into a cylindrical combustor attached to the furnace. Two heavy oil burners are individually mounted underneath the waste wood cylindrical combustor. The burners are manually modulated to meet the steam demand. The oil nozzles are pressure atomizing, with fixed combustion air input and are modulated by variation of the "return to storage tank" oil line pressure.

Waste wood is produced in the manufacturing processes. Of the total raw wood for products, 78 to 80% ends up as waste. TOFA burns 2,483 metric ton/yr of waste wood and sells the remainder to their employees for 59 Kcs/metric ton.

The plant has two main air compressors capable of 0.7 MPa and 450 cubic meters per hour each. There are also two older standby compressors. The air compressor configuration is shown in *Figure 5*. Typically, one compressor can manage the entire plant air demand. Cooling water is circulated through the compressors.

Electric power is provided by the utility at 35,000 volts and stepped down to 400 volts with a single power transformer, shown in *Figure 6*. There is also one back-up transformer. The power supply system is equipped with a power factor correction system. The plant on average has been able to maintain a 0.95 or greater power factor. Electric consumption was 2,579,000 kWh for 1990.

The factory obtains water from their own wells and town water. Well water is used for cooling the air compressors, for service water, and potable water uses.

TOFA has a plan to implement space heating and energy saving process changes within the next few years which will change the energy use profile of the plant considerably, see *Figure 7*. Those design changes include the following.

1. Install natural gas pipeline (completion in 1991).
2. Convert boiler burners to combination natural gas and heavy oil firing. Natural gas will be the primary fuel and heavy oil as backup (completion in 1992).
3. Increase utilization of waste wood in the boiler, install new wood burners and waste wood processing equipment (completion in 1993).
4. Replace lumber drying kilns with vacuum type kilns which will decrease wasted wood percentage (completion in 1993).
5. Add steam accumulators to reduce weekend boiler operating hours (completion in 1993).
6. Finish the installation of the power engineering control center which already consists of an Ursalyt G oxygen analyzer, Robotron computer, and Mikropas programmable digital controller. The power house operation is to be controlled and monitored through this system.

The present plant management strategy regarding energy projects is the following.

1. Payback must be less than 7 years.
2. Outside financing must be avoided. Interest rates for this type of projects are 24%. Plant managers have been examining the profitability of their product and identifying increased turnover and decreased energy consumption as their primary goals.

Figure 4. Steam, Condensate Return, and Boiler Schematic Diagram

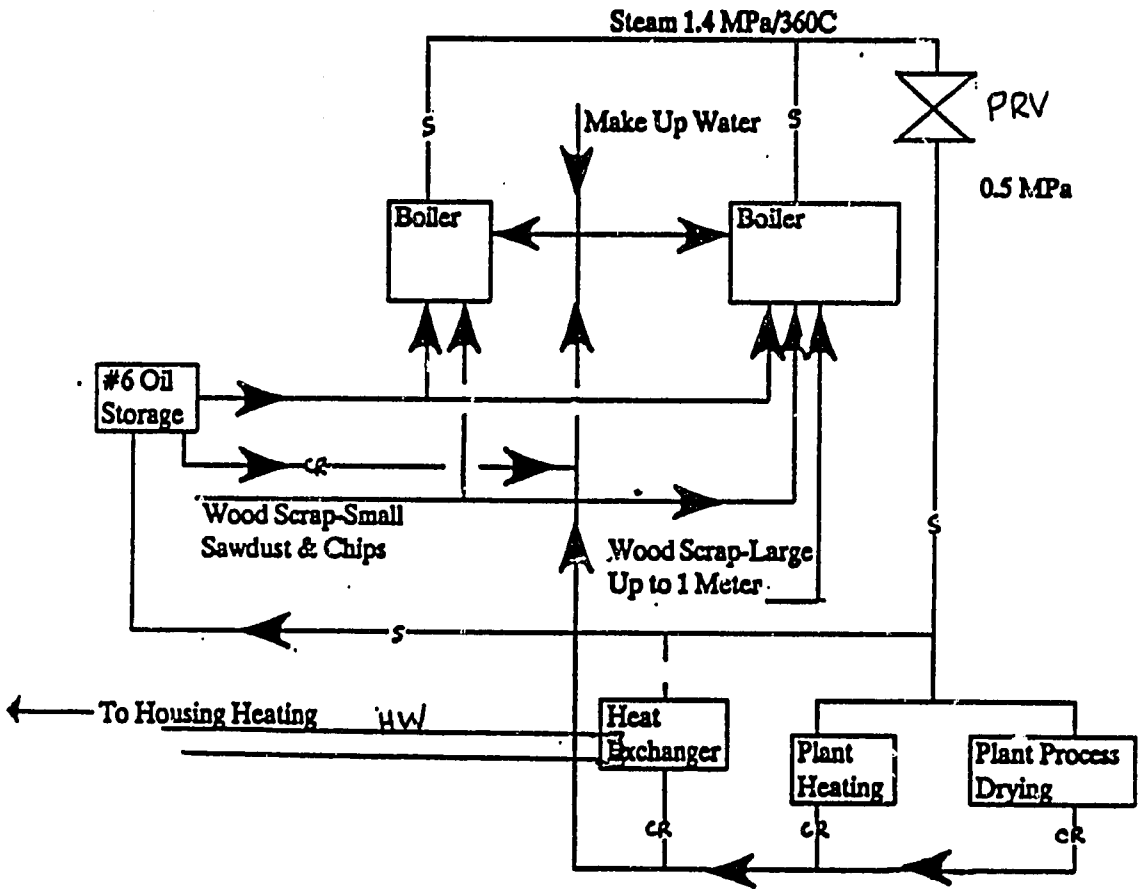

Symbols

CR-Condensate

S-Steam

HW-Hot Water

Figure 5. Compressed Air Schematic Diagram

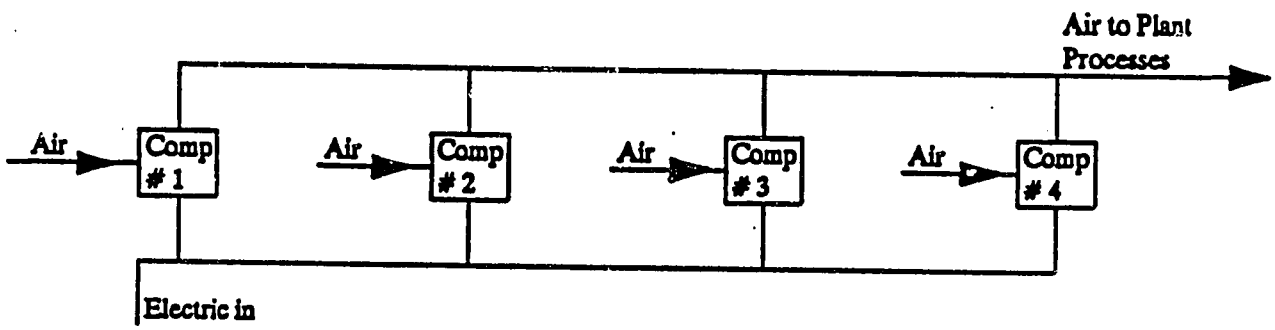

• Comp 3 & 4 Standby

Figure 6. Electric Schematic Diagram.

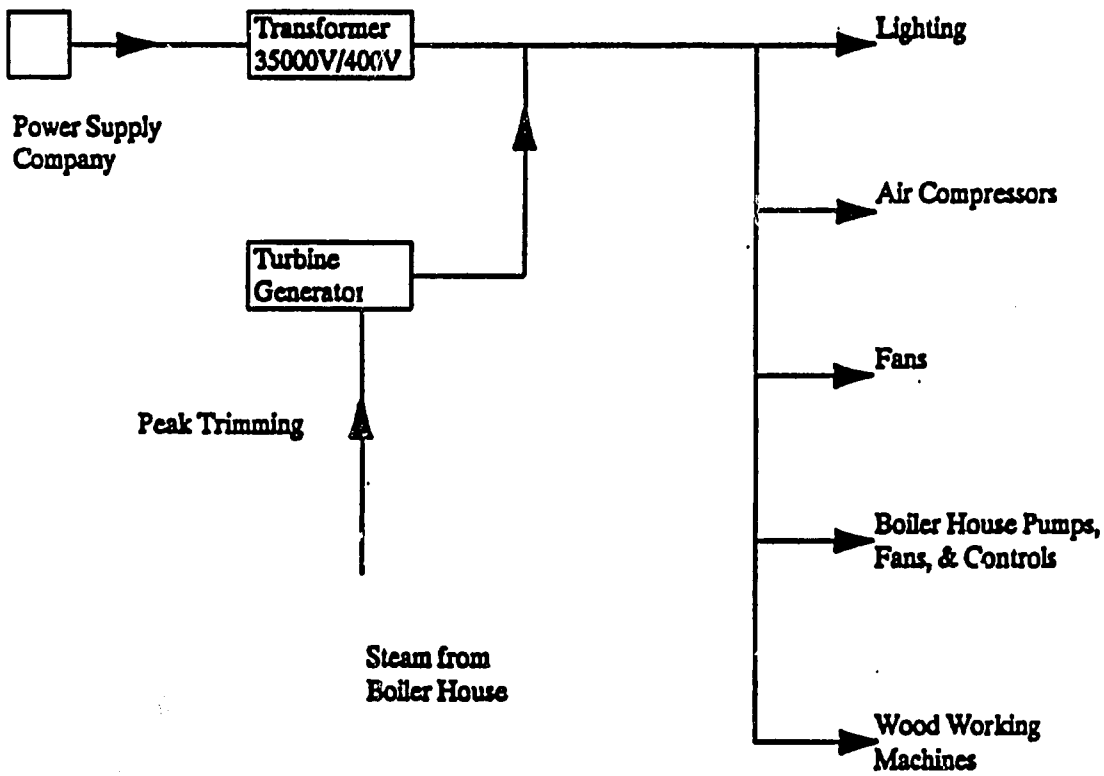

Figure 7. Future Tofa Factory Energy Use Diagram

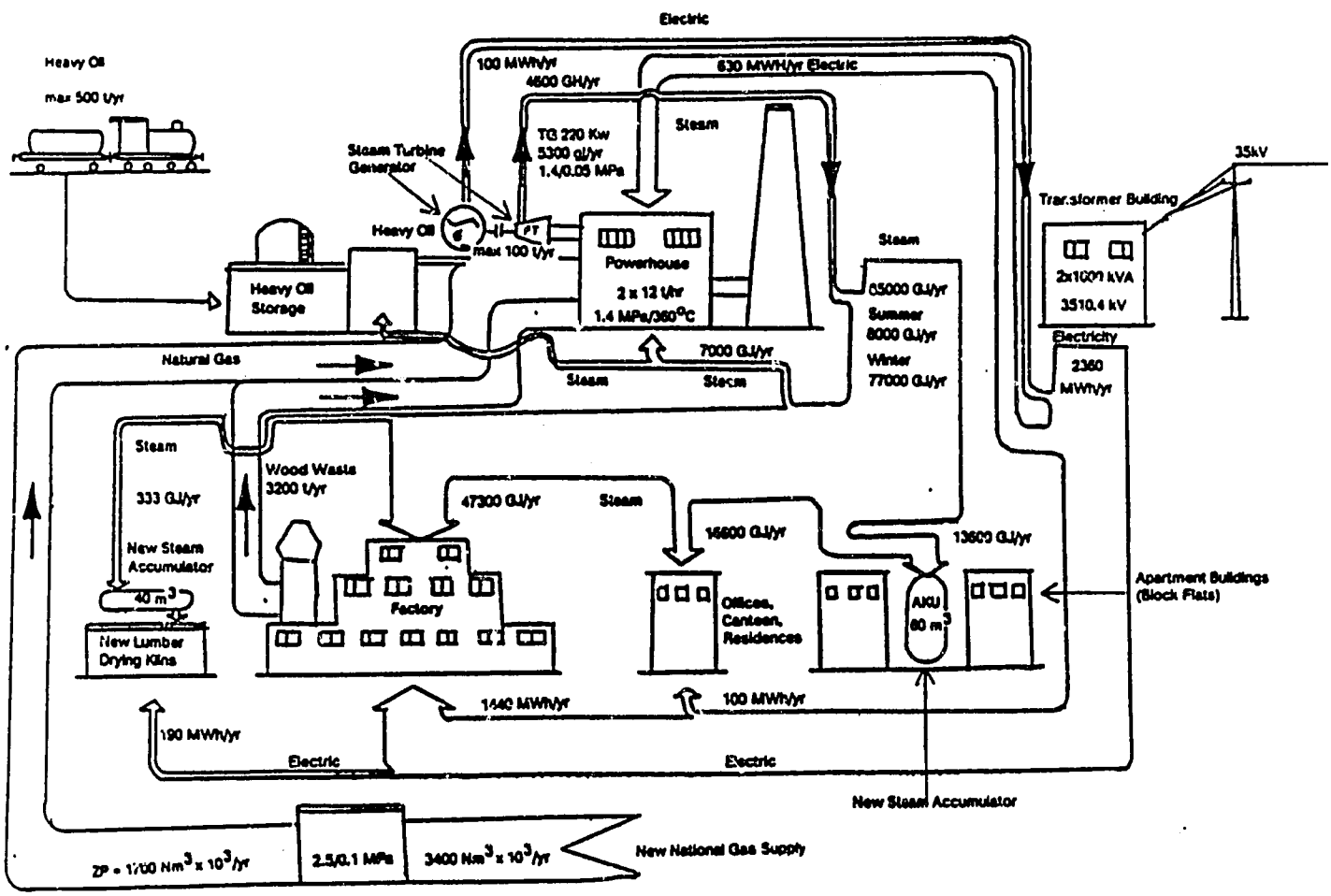

3.0 Audit Description

The audit began with a meeting at the plant on March 18, 1991 attended by Mr. Miroslav Polak (plant director), Mr. Jiri Hubner and Mr. Peter Hubner of TOFA, Mr. William Dries and Mr. Peter Pavelic of the audit team, Mr. Ivo Slavotinek of SEVEn, Mr. Mikulas Madar and Mr. Jaromir Ciha of the State Energy Inspectorate. A discussion of the purpose of the audit continued until noon. After lunch a tour of the plant was started to determine the general layout and arrangement of the facilities and to obtain an understanding of the operations. This tour continued on Tuesday. Specific areas of the plant to be audited in detail were selected. The audit included: steam leaks, piping insulation, uncontrolled building heating, boiler combustion efficiency tests, flow measurements in the boiler house, and temperature and flow measurements of exhaust air from the wood drying kilns in the basement of building No. 3A.

Steam leaks, condensate return leaks, uncontrolled steam vents and feedwater water leaks were noted and the size was estimated. The audit of the uninsulated pipes and uncontrolled space heating was limited to building No. 2 because of the short time available.

The pipe surface temperatures were measured, with an infrared digital non-contact pyrometer, and pipe dimensions were also measured. The two man audit team was assisted by Mr. Madar and Mr. Ciha during the week. Mr. Jiri Hubner, the plant technical director and Mr. Peter Hubner, the plant power engineer, were present about 30% of the time to answer questions and provide guidance. A portion of the time was spent training and demonstrating the use of the infrared temperature sensor and combustion analysis equipment.

Combustion efficiency tests and oil flow tests were run on the boilers to analyze combustion and demonstrate the use of the measuring instruments.

On Friday the audit team presented their preliminary recommendations to Mr. Jiri Hubner, Mr. Peter Hubner, Mr. Madar and Mr. Ciha. The energy audit presentation included an explanation of the funds available to implement the audit team's recommendations and was well received.

4.0 Summary of Results

As a result of the energy audit, several short and long-term energy conservation opportunities were identified. The short-term projects are characterized by low or no implementation costs and short payback periods. Short-term projects could be implemented within 2 to 3 months. Long-term projects are characterized by a larger implementation cost and longer payback periods. Often, long-term projects involve major construction and could require 6 to 12 months to implement.

4.1 Short-Term Energy Efficiency Opportunities

During the course of the audit the following short-term energy conservation opportunities were identified.

Uncontrolled Building Heating: Inspection of buildings at TOFA showed that space heating of the offices, canteen and apartment buildings is by hot water. The recirculating hot water temperature is controlled by the outside temperature for the apartment buildings and each radiator is equipped with a manual control valve. The lack of automatic regulation of the heat at the radiator results in over-heating of many spaces. Low pressure steam is used to heat the production buildings by means of radiators and unit heaters with manual control valves. A list of buildings and spaces is provided in Appendix A. It is estimated that this wastes 10% of the energy supplied for space heating.

A program of control valves installation should be implemented on buildings which will remain in service for more than 3 years.

For building No. 2, the total oil savings is estimated to be about 86 metric tons/yr. The cost of the fuel saved will amount to about 309,582 Kcs/yr. The cost to install and purchase 68 automatic valves is estimated to be 367,200 Kcs. The payback will be 1.2 years. A sample calculation of lost heat due to the existing manually controlled system is included in Appendix A.

Buildings No. 1, 3, 3A, and 10, are buildings that contain offices which have more radiators per unit area than building No. 2. The estimated payback for installing automatic control valves would be 2 to 3 years.

Steam Leaks and Uncontrolled Steam Vents: A number of steam leaks were observed during our audit and the size of each leak was estimated. The leaks are a major source of steam loss, and this may be part of the reason that about 40% of the steam is not returned as condensate to the boilers. Steam is not injected directly into the processes or is used in a process and not returned to the boiler. In a system with good maintenance, lost steam should be no more than 10% due to blowdown and minor leaks. The total waste of steam is estimated at 11,336 GJ/yr.

A fuel savings of 434 metric ton/yr or 1,562,400 Kcs could be realized by implementing a program to repair steam leaks and eliminate uncontrolled steam vents. A list of leaks and sample calculations showing fuel savings are provided in Appendix B. The cost to repair the 22 steam leaks is minimal compared to the potential savings. Payback for this project, assuming 200,000 Kcs for materials and labor, would be less than 2 months.

The actual number of steam leaks is probably greater than the number found during the audit inspection tour. This is assumed because of the short duration of the audit and several areas that were physically too confining to inspect.

In addition to direct energy savings by preventing steam loss through the steam leaks and uncontrolled vents, there is an energy savings due to the increase in condensate returned to the boilers. With an increase of condensate returned to the boilers, fresh make-up water demand is reduced and boiler blowdown is reduced. Condensate return energy savings calculations for an increase from 60% to 80% are included in Appendix D. Fuel oil consumption would be reduced by 50.8 metric ton/yr resulting in a 182,917 Kcs/yr savings.

Flowmeters with flow totalizers should be installed on the make-up feedwater, boiler feedwater, and condensate return supply lines for monitoring and management of the condensate return. For this type of system, a 90% condensate return is achievable with a program of record keeping and inspection/maintenance.

Uninsulated Piping: A number of uninsulated pipes containing steam or condensate were observed, but the majority of the plant piping is adequately insulated. Using pipe surface temperature measurements and pipe surface area, the heat loss from the uninsulated pipe was estimated to be 791.4 GJ/yr (see Appendix C). The audit team estimated that only 50% of the total plant uninsulated pipe was measured and was included in this calculation. Piping, such as steam distribution to space heaters, condensate return and steam control valves should be insulated to reduce heat loss, and re-installation of insulation after piping repairs should be part of the maintenance activities.

Heat loss from steam distribution space heating lines contributes to the overheating of rooms. When this occurs, plant personnel open windows to provide control which results in an additional source for heat loss. Insulation is a simple, low-cost project which would save 21.2 metric tons of fuel oil/ yr. Payback for this project would be good; 1.3 years with an estimated material and labor cost of 81,239 Kcs. The recommended pipe insulation should consist of a minimum of 3.8 cm of fiberglass insulation and cover. The observed plant pipe insulation system, which consists of fiberglass wrapped with aluminum foil and chicken wire, would be acceptable.

Heat Recovery on the Lumber Drying Kilns: TOFA currently dries the wood used in its products in several indirect steam wood drying kilns in the basement of building 3A. The kilns operate 24 hrs/day and produce an exhaust at 45 °C. The energy contained in this exhaust could be recovered by passing it through an air-to-air heat exchanger. The design concept and calculations are included in Appendix E. The system consists of: re-using the

existing exhaust fan; air-to-air heat exchanger; bypass damper; fresh air fan; and interconnecting ducts. During the summer, when there is no use for heat, the bypass damper will be open and the warm air vented to the atmosphere. The air with the recovered heat is sent back into the dryer room and then pulled into the dryers.

The materials and labor for the system is expected to be 388,000 Kcs (see vendor quote included in Appendix E). The heat recovered would reduce the plant's heavy oil consumption by 38 metric tons/yr (156,978 Kcs) and payback would be 2.9 years. It is understood that the dryers are to be replaced within 2 to 3 years but this project could provide immediate reduction in the plants heavy oil dependance.

The potential for waste heat energy recovery from the exhaust air from Building No. 2 was investigated and determined to be not economically feasible. The airflow of the intake ducts, exhaust ducts, make-up air handling unit and the wood dust vacuum system was estimated and the combined exhaust temperature measured. The volume of exhaust, hours of operation, and low temperature provide only a small potential energy savings (see Appendix F). An alternative approach considered would be to reduce the quantity of make-up air and exhaust air in the building. However, the decrease in air turnover would result in reduced interior air quality (wood dust) which would be unacceptable.

4.2 Long-Term Recommendations

Boiler Operation Improvements: As part of the inspection and training aspect of this project, the boiler combustion analyses were conducted using the Enerac 2000 combustion analyzer. An attempt was made to measure the heavy oil fuel input. Difficulties with the ultrasonic flow meter forced the audit team to abandon input/output efficiency testing at 1.4 MPa and 0.5 MPa steam pressures. It is expected that the boiler overall efficiency would be slightly improved by operating at a lower steam pressure. TOFA should conduct two separate month long efficiency tests. During each test the fuel consumed and the steam produced should be closely monitored. Energy contained in the steam divided by the energy of fuel (times 100 for percent) is the overall steam efficiency. The combustion analyzer can only compute the combustion efficiency which is an indication of the stack losses.

Results of combustion efficiency tests for single fuel firing are shown in *Table 3*. The analyzer's computed combustion efficiency of 72 to 77% appears misleading since the measured smoke spot, carbon monoxide level and combustible gases levels are relatively high. Excess air for this type of boiler should be on the order of 175%. These levels indicate poor combustion. Planned new burners should be able to obtain 80% combustion efficiency resulting in a direct fuel savings of 2 to 8% compared to the current burners. Based on the measured smoke spot of 3 - 4 Bacharach scale, the boiler fireside heat exchanger surface is partially fouled with soot resulting in a loss in efficiency. A layer of soot 0.5 millimeters thick will result in a 5% loss in boiler efficiency. At the time of boiler house renovation, the existing boilers should be cleaned thoroughly on the fireside to eliminate soot.

Table 3. Boiler Combustion Analysis

Parameter	Firing Waste Wood	Firing Heavy Oil
Combustion Efficiency, %	72.1	
Ambient Temperature, °C	29.7	26.2
Flue Temperature, °C	175.1	128.6
Net Flue Temperature, °C	145.4	103.1
Oxygen Concentration, %	14.9	15.1
Carbon Monoxide Concentration, mg/m^3	1199.5	155.8
Carbon Dioxide Concentration, %	5.9	4.7
Combustible Gases, %	0.036	0.123
Stack Draft, MM H_2O	-250.7	-251.5
Excess Combustion Air, %	300.1	247.0
Nitrogen Oxides, mg/m^3	113.9	90.1
Sulfur Dioxide, mg/m^3	1.9	828.1
Smoke Spot, Bacharach number 0-9	4.0	3.5
Boiler Firing Rate, % of Maximum	31.0	40.0

Test Location: On the inlet to the flue gas exhaust fan

The audit team examined the existing heavy oil burner and recommended replacing the pressure atomizing nozzle with a steam or compressed air atomizing nozzle (including a new fuel regulator). The smoke spots in combination with the high excess air observed appear to indicate a nozzle problem. Pressure atomizing nozzles rely on fluid pressure to provide energy for the development of a fine oil droplet size. The current system of firing rate regulation reduces the nozzle pressure to achieve lower input.

Steam or air atomizing nozzles can produce a finer oil droplet size and over a wider range of firing rates than a pressure atomized nozzle. Improvement in heavy oil combustion (decreased excess air, combustibles and smoke spot) would increase combustion efficiency by at least 5%. Although the boiler burners will be replaced in 1992, the savings in fuel (93.2 metric ton/yr, 335,340 Kcs/yr) makes this an attractive option. Heavy oil, steam and air atomized nozzles are available from USA manufacturers.

Summer and fall steam requirements show that the required hourly steam demand is considerably less than 12 metric ton/hr boiler capacity. TOFA should further consider installing a 4 to 6 metric ton/hr boiler. The small boiler will handle the low summer season heating demand whereas the large boiler will operate during the fall and winter. This is a common strategy to optimize multiple boilers and each boiler's efficiency versus the load.

demand. For example, a 12 metric ton/hr boiler operating at 6 metric ton/hr output would typically have a 65% overall efficiency whereas a 6 metric ton/hr boiler operating at 6 metric ton/hr typically a 75% efficiency. Potential fuel savings over a seven month period each year is 79 metric ton/yr (284,400 Kcs/yr), which would be an attractive long-term option.

Wood Combustion System Technology: For this size application, TOFA should consider burning all of their wood waste in a cyclonic fine wood chip type burner. This type of burner is similar to the plant's existing wood burner but has additional secondary air jets and wood processing equipment. The current system allows large wood chips/chunks to pass through the flame zone too quickly to completely combust. Glowing embers can be observed at the exhaust fan. Processing the wood through a hammermill would produce a fine wood chip which would dewater, gasify and burn quickly in the flame zone of the burner. Also, after the wood is gasified in the flame, secondary air should be added through jets/holes to enable complete combustion of the combustible gases.

Wood Collection, Handling, Storage and Processing: A future potential system of handling and processing waste wood at the TOFA plant is shown in *Figure 8*. Experience has shown that wood systems are not fool proof and rely on above average manpower and maintenance to operate. Components to the wood handling system are the following.

1. Fabric filter baghouse for the removal of wood dust from the factory air and the return of the warm air to the factory. A pulse jet cleaning baghouse with felted fabric filter bags would provide the required cleaning efficiency.
2. Belt conveyor of wood dust/chips.
3. Wood dust/chips storage silo sized to store several days worth of fuel.
4. Fuel metering auger type feeder to modulate automatically to meet the steam pressure demand.
5. Hammermill to provide fine wood particles for efficient combustion in the boiler burner.
6. Wood hogger to process chunks of wood into wood chips suitable for processing in the hammermill.

Figure 8. Potential System for Handling and Processing Waste Wood

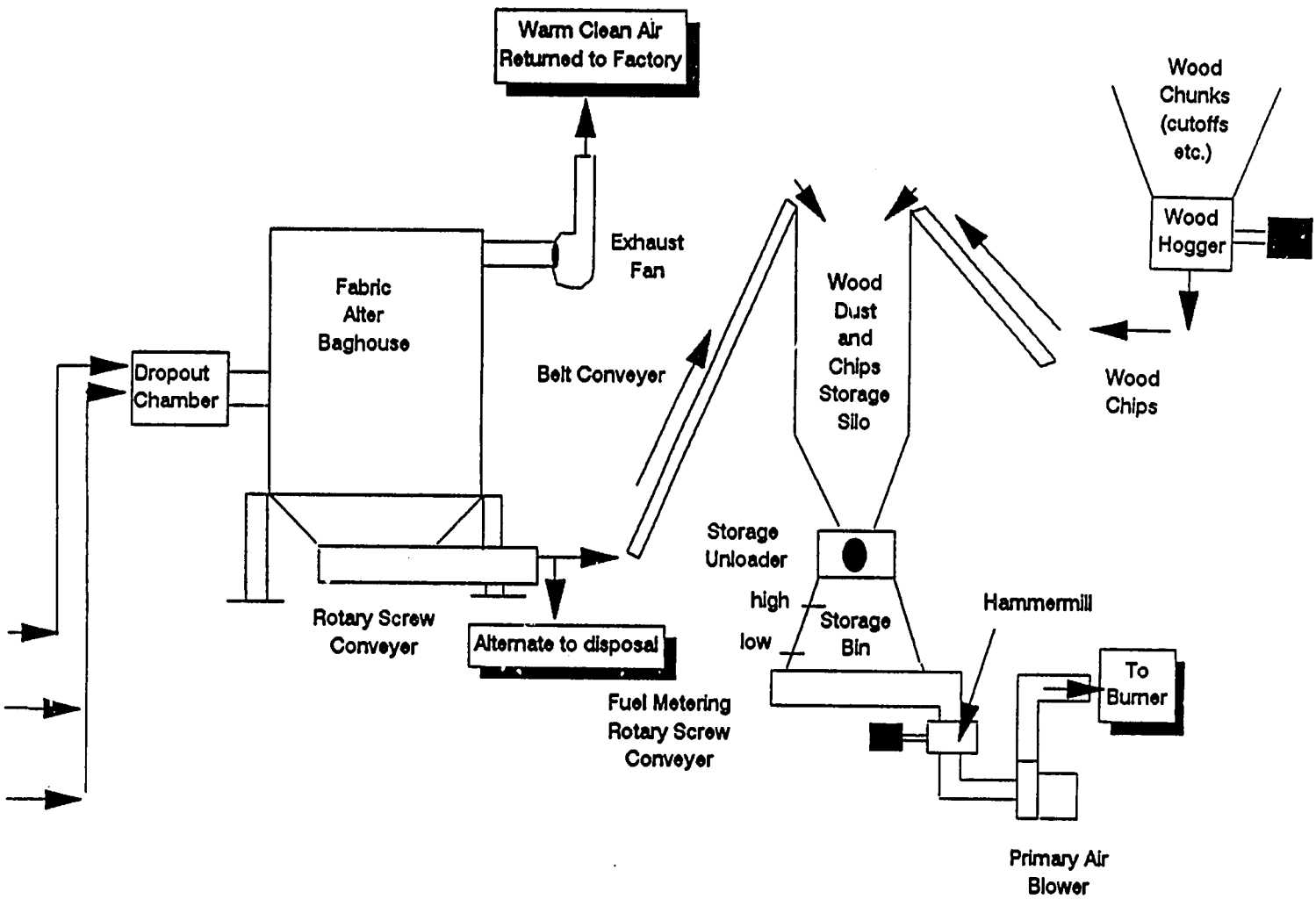

5.0 Plant Management/Organization

The plant has many projects underway to modify and improve operation. Plant personnel recognize the need to improve energy efficiency, such as the conversion of the boilers to natural gas planned for in 1992.

Plant management should consider implementing a plan to carry out both short-term and long-term energy conservation. This plan should include training of people in the plant to recognize the importance of energy savings. A formal plan with identifiable people responsible for training and implementing an energy conservation program is not presently operating at the plant.

A system of energy management is carried out for the heat used to heat the apartment buildings. The total heat supplied to the buildings is measured at a central plant where the steam is converted to hot water and the water temperature controlled according to the outside air temperature. The control of heat in each apartment is by the tenant, using hand valves on the radiators. Each year an estimated heating requirement is calculated for each apartment. If the tenants throughout the project use less heat than the estimate at the end of the year, a cash rebate is given to each tenant; if more heat is used than planned, no rebate is given. This system is used to encourage energy conservation.

6.0 Implementation Evaluation

A visit was made on July 25 and 26, 1991. Mr. Jiri Hubner and Mr. Peter Hubner from TOFA were present both days. The initial meeting was devoted to a review of energy conservation projects and preparation for the seminars in Prague and Bratislava. The energy conservation projects underway at TOFA were described in the seminar and the status of the implementation and anticipated savings were major items of the presentations. The seminar speaker was Mr. Peter Hubner.

6.1 Repair of Leaks and Addition of Insulation to Steam System

Condensate and steam lines that had been replaced were viewed. These lines were exposed by the tunnels that had been uncovered in order to do the work. The boilers had been shut down for this work. Picture number 1 in Appendix I shows the new condensate steam lines. Inspection of steam tunnels and piping was also made at this time. This was not possible during the previous visit because the boilers were in operation. Insulation of the existing lines was adequate.

Piping that was to be insulated and repaired to stop leaks was inspected. This work was about 20% complete at the time of the July visit. The work and materials are as specified. Purchase orders for the above work were inspected to verify the amount of work contracted for, and no deviations were found. Picture number 2 in Appendix I shows the piping insulation.

6.2 Automatic Control Valves to Control Building Heating

The interior of the production buildings Nos. 1 and 8 were inspected. None of the automatic valves were installed. Installation was due to start the following week and be completed by the end of August 1991. The valves were stored on the site and inspection of several valves were made. Picture number 3 in Appendix I was taken to of these uninstalled heating control valves.

All work is to be completed by the end of August and TOFA will send RMA a letter when work has been completed to their satisfaction.

6.3 Future Evaluation of Results

TOFA has installed a metering system which will allow them to determine the amount of condensate returned to the boiler, and this, along with the condensate return line temperature, will be used to evaluate the amount of energy saved by repair and insulation of the steam system. The present system returns about 60% of the condensate to the boiler and the rest is lost to leaks and blowdown. The goal of the project is to increase returns to 80%.

TOFA will prepare a final report of the project when it is completed and will include evaluation of results. Copies of this report will be sent to RMA if requested by RMA.

6.4 Energy Management

The plant Technical Director and Power Engineer are now well aware of the need to conserve energy and are implementing the energy conservation projects.

6.5 Miscellaneous

The price TOFA charges for wood sold to the employees has doubled since March.

A discussion of the use of microwave technology to dry the wood was discussed with the Technical Director and Power Engineer. This method may have benefits to save energy and improve product quality. The cost benefit is not known at this time and will be investigated in the future.

APPENDIX A
Calculations for Uncontrolled Building Heating

Table A1. Buildings and Spaces

Building Number and Use		Building Area in Square Meters
1	Offices	432
2	Production Building 4 stories and basement	13,230
3,3A	Offices	640
3B,3C	Maintenance and Machine Shop	984
4	Water Treatment	110
5	Boiler House	360
8	Production 2 Stories	6,000
9	Electric Service	190
10	Offices	1,140
12	Condensate Return House	171
15	Housing and Day Care	518
17	Apartment Hotel 24 units	650
18	Assembly Hall and Cafeteria	748
30	Apartment 3 units	216
31	Apartment 48 units	5,950
31A	Apartments 72 units	7,075
31B	Apartments 24 units	2,915
Total	41,329 m^3	

Note: Building numbers are as shown on the site plan.

Sample Calculation for Uncontrolled Building Heating:

Building 2 is heated by approximately 68 small steam radiators and unit heaters and one large air handling unit. (volume 23 cubic meters/s) (48,300 cfm) 20 kW motor

The estimated heat loss for the building is 2,400,000 BTU/hr at design conditions.

Savings based on the estimated heat loss and a saving of (10%) 0.17 $GJ/m^2/yr$. At a 10% saving this will save 0.17x137.7 Kcs/GJ = 23.4 Kcs/m^3.
Total = 23.4 x 13,360 = 309,582 Kcs.

The cost to furnish and install 68 valves is estimated at 5,400 Kcs per valve with installation by the owner for a total of 367,200 Kcs.

The payback is about 1.2 years.

Buildings 1, 3, 3A and 10 are offices also with uncontrolled heating and have more radiators per square meter than building 2 and will have a longer payback, estimated at 2 to 3 years.

The control valve specification should be for valves that are self contained and have a thermostatic operator. This type of valve doesn't require electric power to operate. The size range is from 1/2 to 1" and the steam flow should be about from 3 to 40 lbs/hr. Some valves may require a remote temperature sensor. The pressure is low at 0.05 MPa or about 5 psig.

The following specification sheets for Braukmann or Erie valves show the type of valve desired. The pressure and temperature limits of this valve are 248 °F (120 °C) 150 psig water and 15 psig steam. These valves could be used for the low pressure steam 0.05 MPa and hot water to factory buildings, apartments and offices. The model T100F or T100V with a water flow rate of 4 to 6 gpm at 1.0 psig max pressure drop would be adequate.

Valves required for the higher steam pressures (50 psig) are a similar type and are available from Johnson Controls, Jordan Valve and Trerice Co. in Detroit, Michigan, USA.

Valve Catalogue Cut Sheets and Quotation

BRAUKMANN
BRAUKMANN CONTROLS CORPORATION
56 Harvester Avenue Batavia, New York 14020

Thermostatic radiator valves, high capacity...

V110 Series Valves

Used with T104 series controls. For control of hot water or steam radiators, convectors or other heating units. Designed with the higher [illegible] systems. (May also be used with MV110B Electric Zone Valve actuator. See page 9.)

V110 series valves are specified as either straight (D), angle (E), or horizontal angle (F) valve body patterns.

Construction

Nickel plated brass casting, with working parts in cartridge insert for ease of service. Outer o-ring seal replaceable while valve remains in service; other parts replaceable in-line, while under pressure using accessory tool MT110C. Valve seat disc is made of resilient material (EPDM) to ensure light shut-off on steam or hot water systems. Valve is normally open with control mounted.

Connections

Inlet ..... internally threaded
Outlet ..... 1/2", 3/4", 1", 1¼" (no 1¼" sweat)

Temp and pressure ratings

Max. temp ..... 248° F (120° C)
Max. system psi ..... 150 psi hot water
15 psi steam
Max. differential* ..... 17 psi
Min. differential* ..... 3 psi

Accessories

Cartridge changer ..... for replacing cartridge in-line while under pressure
Service socket ..... for replacing cartridge after system shutoff
Plastic cap ..... for manual control of valve during installation
Adapter ..... sweat to NPT thread
Strainer screen ..... insert for steam service
Y-pattern strainer ..... for steam service (see pg.14)

*Proper operation of these valves requires a minimum pressure differential between the supply and return lines of at least 3 psi. If the pressure differential exceeds 17 psi, there is a probability of steam or hot water flow through the valve regardless of the set temperature.

Capacities (Graph on page 34)

Size	1/2"	3/4"	1"	1¼"
Cv factor	4.6	5.8	7	7
Btu/Hr.	127,000	162,000	193,000	193,000

Cv = GPM at 1 psi Δ (differential pressure)
Btu/Hr @ 7 psi drop across fully opened valve

Dimensions

Size		1/2"	3/4"	1"	1¼"
V110 D Straight	A	3¾"	4⅛"	4 11/16"	5⅞"
	Cmax*	4¾"	4¾"	4¾"	5"
V110E Angle	A	2 9/16"	2⅝"	3"	3⅝"
	B	1"	1⅛"	1 5/16"	1 11/16"
	Cmax*	4¾"	4¾"	4¾"	5"
V110F	A	2¼"	2 9/16"	2 15/16"	3⅛"
	B	1"	[illegible]	[illegible]	[illegible]

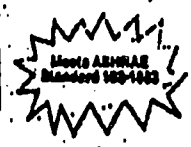

Ordering Information

V110D straight pattern valve body, [illegible] runs where manual valves were not originally installed.

Straight Pattern Valves		
Model No.	Size	Tailpiece
V110D1000	1/2"	Threaded
V110D1008	3/4"	
V110D1016	1"	
V110D1024	1¼"	
V110D5001	1/2"	Sweat
V110D5009	3/4"	
V110D5017	1"	

V110E angle valves are used where installation space is tight. Used with T104B, C and F model series.

Angle Pattern Valves		
Model No.	Size	Tailpiece
V110E1004	1/2"	Threaded
V110E1012	3/4"	
V110E1020	1"	
V110E1028	1¼"	
V110E5005	1/2"	Sweat
V110E5013	3/4"	

V110F horizontal angle pattern valve body, sized to replace most manual valves with minimum piping changes. Normally used with T104A and T104V controls to conform to horizontal mounting requirements.

Horizontal Angle Valves		
Model No.	Size	Tailpiece
V110F1002	1/2"	Threaded
V110F1010	3/4"	
V110F1018	1"	
V110F1026	1¼"	
V110F5003	1/2"	Sweat
V110F5011	3/4"	

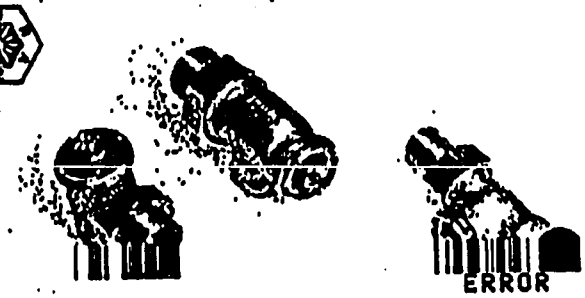

30

BRAUKMANN Thermostatic Zone Valves

Non-electric Type
For both Hot Water and Steam

VT 110
VT 105

CAPACITY OF BRAUKMANN THERMOSTATIC RADIATOR VALVES FOR HOT WATER GPM

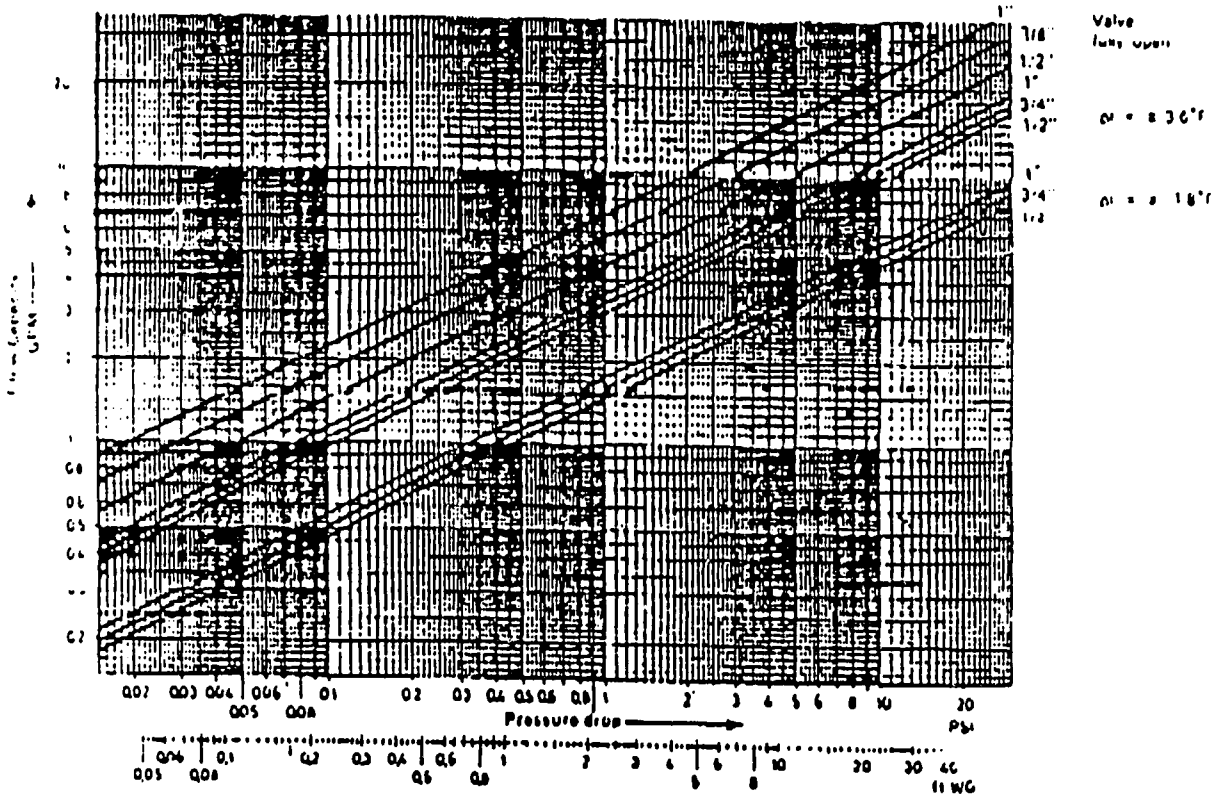

CAPACITY FOR LOW PRESSURE STEAM

Valve Size	Pressure drop across valve								
	BTU/Hr Valve fully open			BTU/Hr 7.2°F. Throttling Range			BTU/Hr. 3.6°F. Throttling Range		
	3 psi	5 psi	7 psi	3 psi	5 psi	7 psi	3 psi	5 psi	7 psi
1/2	100,000	120,000	127,000	65,500	76,000	82,000	31,500	37,000	39,500
3/4	126,000	149,000	162,000	69,000	82,000	88,000	33,500	40,000	44,000
1"	151,000	179,000	193,000	71,500	86,000	92,500	36,000	46,500	46,500

1 psi pressure = 2.3 feet water

Subject to changes without prior notice

Printed in U.S.A.

BRAUKMANN
BRAUKMANN CONTROLS CORPORATION
56 Harvester Avenue Batavia, New York 14020

T100 Thermostatic Controls

Each control is self powered and requires no electrical connections. Each unit is made up of a sensor, setpoint dial, and valve actuator. These three components may be contained in one unit, or connected by capillary tubes. Setpoint dials show guide marks (1 - 5) and provide positive shutoff when turned fully clockwise (0).

T100A control is self contained, having the sensor, setpoint dial and valve actuator in one unit which is mounted on the valve body. Setpoint dial has selectable limit stop. Horizontal positioning is required for accurate temperature regulation. Not for use inside enclosures or where airflow around the sensor is restricted. Range 46-82° F (8-28° C).

T100M control is self contained, having the sensor, setpoint dial and valve actuator in one unit which is mounted on the valve body. Control locks to valve body with internal ratchet device, and is sealed to protect from tampering or recalibrating. Horizontal positioning is required for accurate temperature regulation. Not for use inside enclosures or where airflow around the sensor is restricted. Setpoint range 43-72° F (6-22° C).

T100V control is self contained, having the sensor, setpoint, and actuator in one unit which is mounted on the valve body. It has a rugged, tamper resistant construction, which locks to the valve body. The setpoint dial is internal, with reset by special tool (MT111V) only. (Factory set at 70° F (21° C) Horizontal positioning is required for accurate temperature regulation. Not for use inside enclosures or where airflow around the sensor is restricted. Range 59-77° F (15-25° C).

T100F control with remote sensor is mounted on the valve body, with sensor mounted below the heat source in the cold air return, or on a nearby wall. The setpoint dial has selectable limit stops. The capillary length is 6' 8". Setpoint range is 48-82° F (9-28° C).

T100B control with remote setpoint - sensor. Actuator mounts to valve body, with sensor-setpoint dial mounted on a nearby wall, in good air flow. Capillary lengths of either 6' 8" or 16' are available. Range 48-82° F (9-28° C).

T100C control with remote setpoint and remote sensor. Double capillaries are each 4' 6" in length. The actuator is mounted to the valve body, the setpoint dial to the outside of cabinet, the sensor in the cold air return, below the heat source. Setpoint range is 48-82° F (9-28° C).

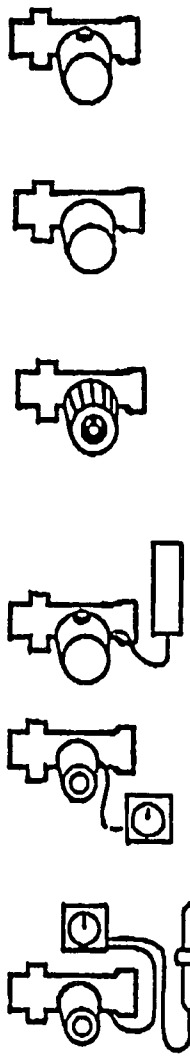

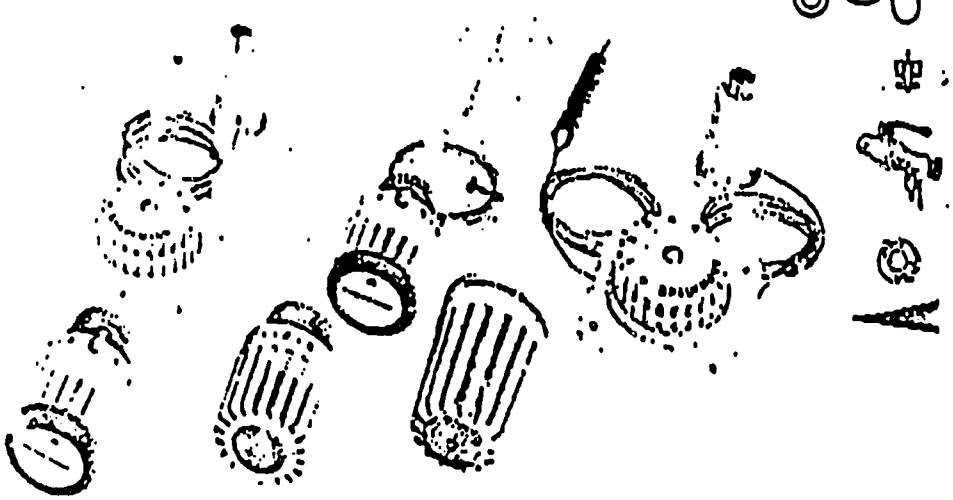

Ordering Information

Thermostatic Controls	
Model No.	**Description**
T100A1018	Direct mount setpoint, internal sensor
T100B1019	Remote setpoint - sensor, 6'8" capillary
T100B1027	Remote setpoint - sensor, 16' capillary
T100C1015	Remote setpoint, remote sensor, with double capillaries
T100F1387	Direct mount setpoint, remote sensor
T100M2041	Direct mount, tamper resistant
T100V1339	Direct mount, internal setpoint and sensor, vandal proof construction

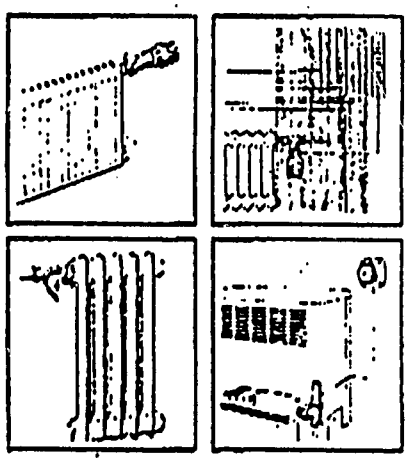

Accessories	
Model No.	**Description**
CA100A1016 ...	Replacement cartridge for V100 series valves
MT100C1016 ...	cartridge changing tool for V100 series valves
MT100L1023 ...	tool to remove M model control from valve body
P109V	Replacement locking ratchet for T100V control
Q110D1045	Strainer insert for 1/2" size valves
Q110D1053	Strainer insert for 3/4" size valves

BRAUKMANN
BRAUKMANN CONTROLS CORPORATION
56 Harvester Avenue Batavia, New York 14020

ENERGY-SAVING NON-ELECTRIC TEMPERATURE CONTROL for LOW PRESSURE STEAM and HOT WATER SYSTEMS

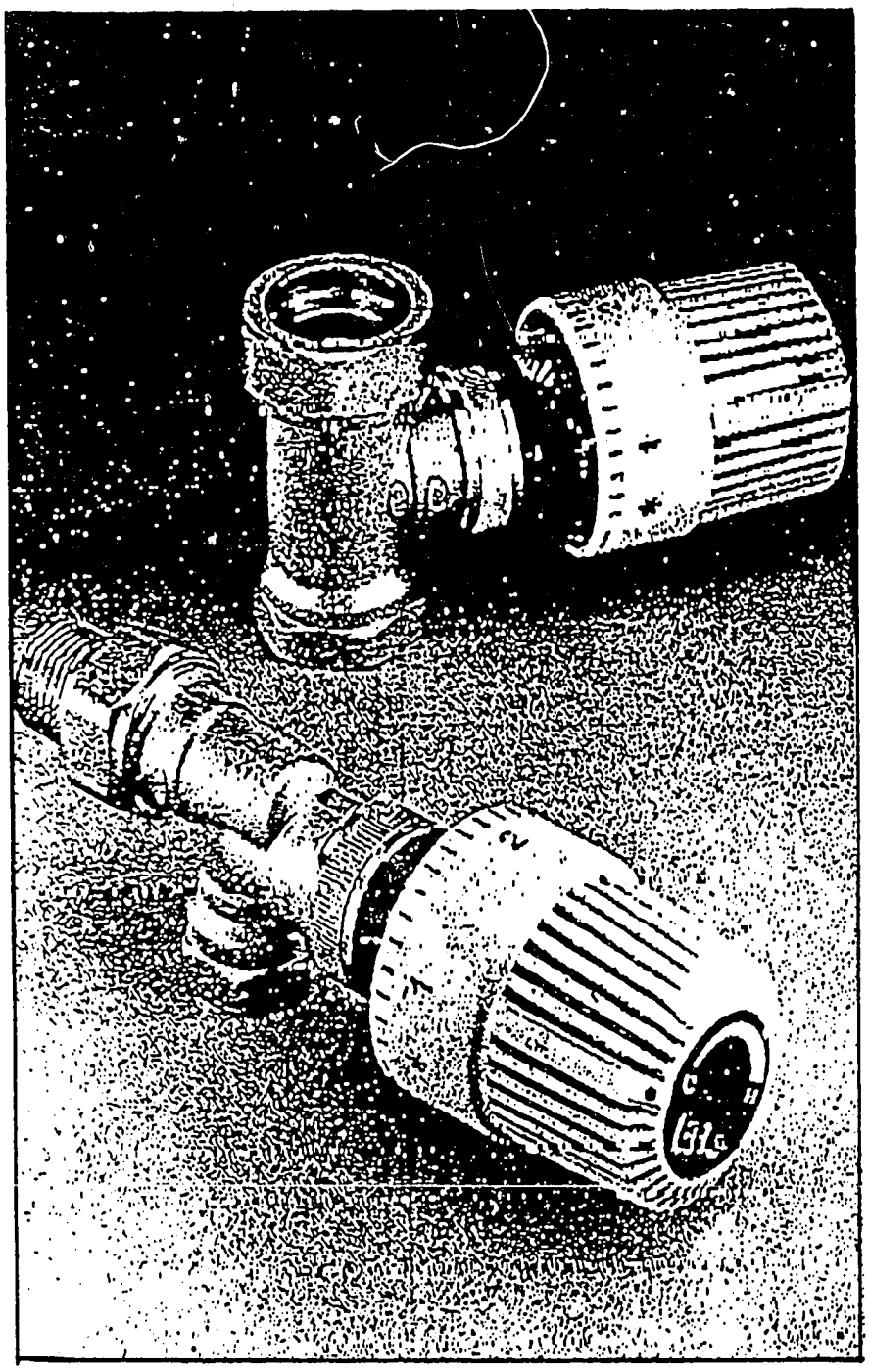

Erie's non-electric valves are the most simple and cost-effective means of automatic temperature control on the market. Used extensively throughout Europe for years to reduce soaring heating costs, this type of fully automatic valve is ideal for retrofit and new installation in apartments, office buildings, schools, hotels, hospitals, factories and govenment buildings. Over heating is eliminated, and each heating unit is balanced according to local demand.

Totally self-contained, Erie's valves require no electrical connections. The thermostatic head of the control contains a heat sensitive liquid that expands as the temperature rises, operating the valve to shut off the flow of water or steam through the radiator. The valves are easily installed directly into individual freestanding radiators, convectors and baseboard heaters — usually without changes to existing piping. Installation costs are reduced because valves can be completely installed by plumber or steamfitter alone.

OTHER FEATURES

- Precise temperature control — 1° F hysteresis.
- Micrometer-type adjustment provides even room temperature for maximum comfort.
- Set points can be locked and limited.
- Eliminates energy waste from open windows.
- Adjustable day and night indicator settings.
- 5-year limited warranty.
- One-trade installation.
- Direct mount or remote sensor thermostats.
- Threaded connections — ½" or ¾" NPT sizes.
- Fully automatic, non-electric operation.
- Optional tamper-proof locking collar protects valve from unauthorized adjustment or removal of control.

Erie

ERIE CONTROLS

33

SPECIFICATIONS

Applications: 250° F (120° C) Hot Water and 10 PSI Steam

Temperature Range: 48 - 81° F (9 - 27°.C)

Maximum System Pressure: 200 PSI (Water) 10 PSI (Steam)

Maximum Working Temperature of Liquid-Filled Thermostatic Heads: The thermostatic head may not be exposed to a higher temperature than 122° F (50° C) or lower than −4° F (−20° C).

Approximate Temperatures for Numerical Settings of 573 Thermostatic Heads:

Δ	*	1	2	3	4	5
37° F	48°	52°	61°	70°	76°	81° F

Valve Body:
- Forged Brass — Nickel Plated
- Stainless Steel Stem
- Stainless Steel Spring
- Overcoated Disc with Back Seat
- Replaceable "O" Ring Gland without Draining System

HOW TO ORDER

Erie's thermostatic radiator valves consist of direct or remote sensor thermostats coupled with the appropriate valve. Choose from Erie's selection designed to suit virtually any hydronic heating system. Order each item by part number.

VALVE BODIES

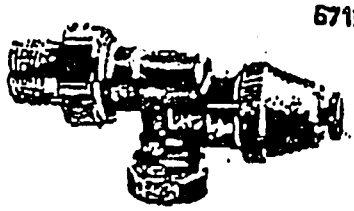

571 ANGLE

Number	C_V	Size
571A6	1.2	1/2"
571A7	2.4	3/4"

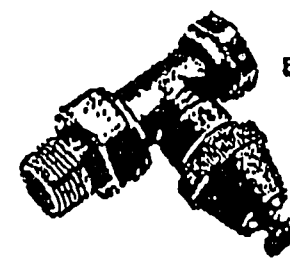

572 STRAIGHT

Number	C_V	Size
572A6	1.2	1/2"
572A7	2.4	3/4"

THERMOSTAT

DIRECT MOUNT, SELF CONTAINED

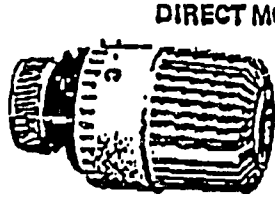

Number	Temp. — Range
573A0	48 - 81° F (9 - 27° C)

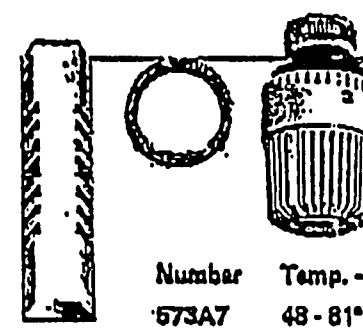

REMOTE SENSOR

Number	Temp. — Range	Capillary Length
573A7	48 - 81° F (9 - 27° C)	6 feet (2m)

TAMPER-PROOF LOCKING COLLAR

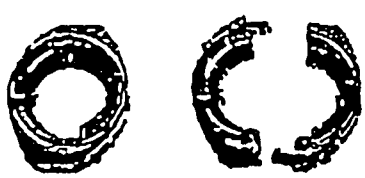

574A208

VALVE CARTRIDGE

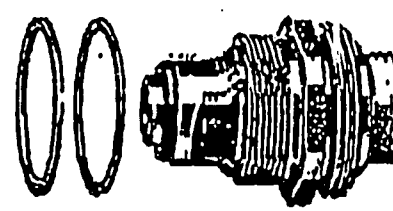

"O" Ring Gland (Can be replaced without draining system) 574A205

Complete Cartridge with "O" Ring Gland 574A204

Erie

NON-ELECTRIC THERMOSTATIC VALVES

SPECIFICATIONS

Applications: 250° F (120° C) Hot Water and 10 PSI Steam

Temperature Range: 48 - 81° F (9 - 27° C)

Maximum System Pressure: 200 PSI (Water) 10 PSI (Steam)

Maximum Working Temperature of Liquid-Filled Thermostatic Heads: The thermostatic head may not be exposed to a higher temperature than 122° F (50° C) or lower than −4° F (−20° C).

Approximate Temperatures for Numerical Settings of 573 Thermostatic Heads:

Δ	*	1	2	3	4	5
37° F	48°	52°	61°	70°	75°	81° F

Valve Body:
- Forged Brass – Nickel Plated
- Stainless Steel Stem
- Stainless Steel Spring
- Overcoated Disc with Back Seat
- Replaceable "O" Ring Gland without Draining System

VALVE BODIES

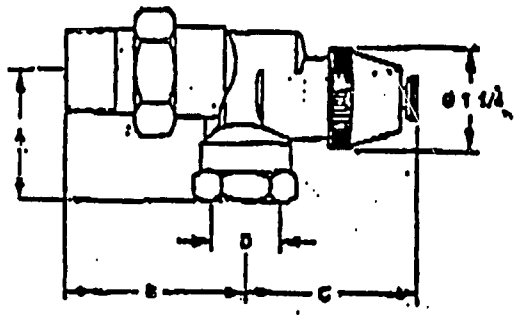

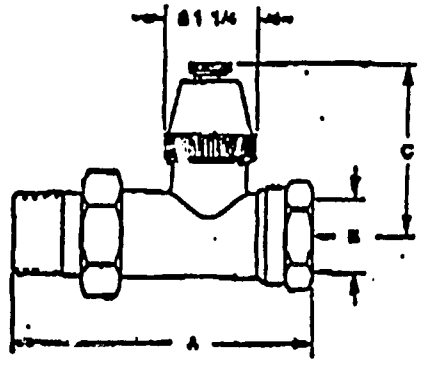

Number	Size	A	B	C	D
571A6	1/2 NPT	1 1/2	2 1/8	[illegible]	1/2 NPT
571A7	3/4 NPT	1 5/8	2 1/2	2 7/16	3/4 NPT

Number	Size	A	B	C
572A6	1/2 NPT	3 3/4	1/2 NPT	2 1/4
572A7	3/4 NPT	4 1/8	3/4 NPT	2 1/4

FOR OVERALL HEIGHT WITH HEAD FROM CENTER LINE, ADD 2-1/2" TO "C" DIMENSION.

THERMOSTAT

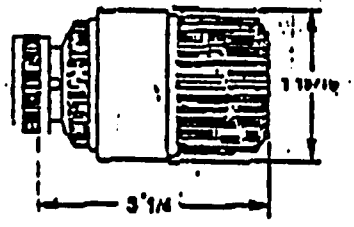

573A6

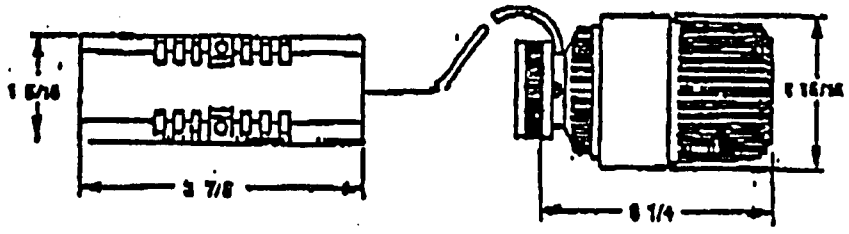

573A7

Capillary Length – 6 feet (2m)

Erie

ERIE CONTROLS

Erie

NON-ELECTRIC RADIATOR VALVES

PART NUMBER	DESCRIPTION	QUANTITY	LIST	SUGGESTED CONTRACTOR
571A6	1/2" Angle Body	1-36	$23.48	$11.74
		37-107	21.62	10.81
		108+	20.90	10.45
571A7	3/4" Angle Body	1-36	31.32	15.66
		37-107	28.84	14.42
		108+	27.72	13.86
572A6	1/2" Straight Body	1-36	17.96	8.98
		37-107	16.56	8.28
		108+	15.88	7.94
572A7	3/4" Straight Body	1-36	27.94	13.97
		37-107	25.76	12.88
		108+	24.72	12.36
573A6	Direct Mount Thermostat	1-36	27.68	13.84
		37-107	25.48	12.74
		108+	24.52	12.26
573A7	Remote Sensor Thermostat	1-36	62.14	31.07
		37-107	57.24	28.62
		108+	54.98	27.49
574A206	Locking Device	1-36	1.60	.80
		37-107	1.46	.73
		108+	1.42	.71

NON-ELECTRIC THERMOSTATIC VALVES

- Self-contained, non-electric thermostatic valves for individual room temperature control.
- Hot water heating systems or steam heating to 10 psi.
- 1/2" and 3/4" NPT.
- Direct mount and remote bulb.
- Can be set to high/low limit or fixed temperature.
- Temperature range 48°–81° F.
- NPT female inlet/male union outlet.
- Improve comfort and fuel economy.
- Freeze protection.
- No electricity required.
- Five year limited warranty.

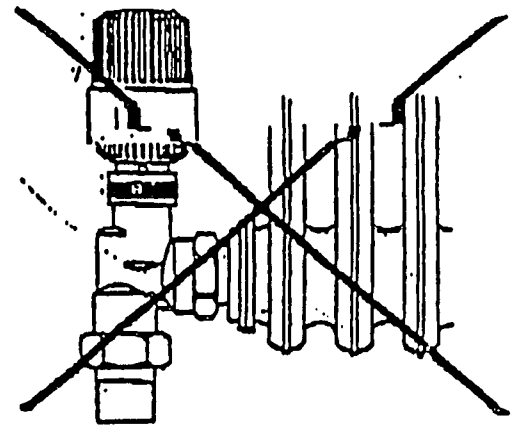

(NOT RECOMMENDED)

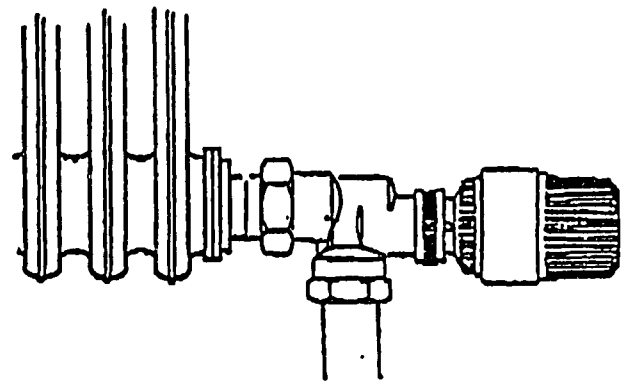

– CAUTION –
DO NOT MOUNT IN A VERTICAL POSITION. Mount horizontal or use remote bulb thermostat.

PRESSURE DROP GRAPH

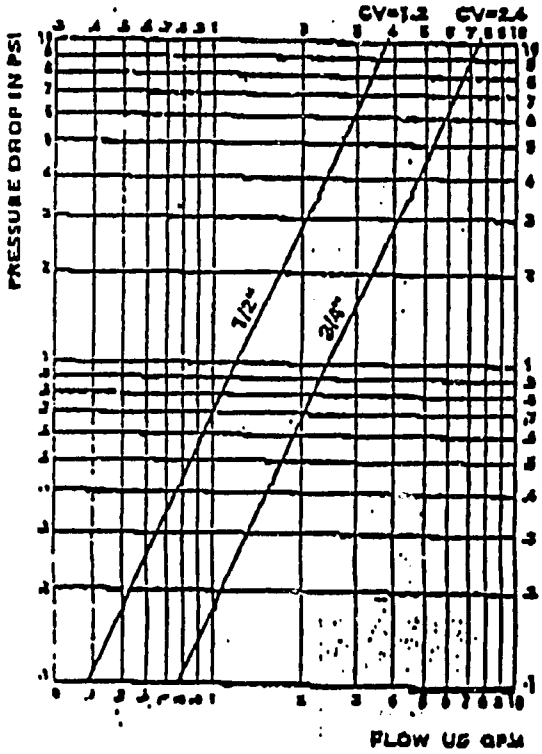

PRESSURE DROP ACROSS VALVE
(Based on fully open valve)

	PSI		FEET OF WATER	
GPM	1/2"	3/4"	1/2"	3/4"
1	.7	.2	1.6	.5
1.5	1.6	.4	3.7	.9
2	2.8	.7	6.5	1.6
2.5	4.3	1.0	9.9	2.3
3	6.2	1.6	14.3	3.7
4	11.0	2.8	25.4	6.4

JOHNSON CONTROLS
JCI Regelungstechnik GmbH

JCI Regelungstechnik GmbH · Max-Planck-Straße 16 · 6382 Friedrichsdorf/Taunus

Mr.Charles Fafard
Resource Management Associates
520 University Avenue
Madison,WI 53703
USA

International Division
Max-Planck-Straße 16
D-6382 Friedrichsdorf/Taunus
Tel.: (49-61 72) 73 5-0
Telex: 4 15 817 jcif d
Telefax: (49-61 72) 73 5-149

Ihr Zeichen Your Ref.	Ihr Schreiben vom Your Letter of	Unser Zeichen Our Ref.	Nebenstellen-Nr. Ext.-No.	Datum Date
		91/MM/22		26.3.1991

Re: Proposal Nr. 475/1/CPRS/058/00
Project: Pragolaktos, Prague, ČSFR

Dear Sirs,

please find in the enclosure the proposal for above mentioned project. We believe that it will fulfil your expectations in energy savings.

We look forwards to being of service to you and to the U.S.AID and would like to assure you of our best cooperation to make your projects a success.

Please feel free to contact us in case of any questions

Very truly yours

JCIR Prague
D.Mach

...strasse 8, 4300 Essen 1, Telefon (02 01) 34 00, Telex 857 308, Telefax (02 01) 34 03 61, Cable: JCIR, Amtsgericht Essen: HRB 5126, Geschäftsführer: Peter Pfenker, Luigi Andena, Robert Nebolsky

...Essen (BLZ 360 501 05) ...Nr. 247 688 | Commerzbank AG Essen (BLZ 360 400 39) Kto.-Nr. 1 246 400 | Dresdner Bank AG Essen (BLZ 360 800 80) Kto.-Nr. 414 766 200 | Deutsche Bank AG Essen (BLZ 360 700 50) Kto.-Nr. 1 737 661 | Westdeutsche Landesbank Essen (BLZ 360 500 00) Kto.-Nr. 5 569 056 | Postgiroamt Essen (BLZ 360 100 43) Kto.-Nr. 2 446-437

38

Proposal No. : 475/1/CPRS/058/00
Project : Pragolaktos
Location : Prague, CSFR
Date : March 19, 1991

4.4 Thermostatic Valves for Radiators

According to the exact specification of the thermostatic valves received from Mr. Dvoracek from Pragolaktos, we propose the following valves:

TYPE	QUANTITY	PRICE
3/8" 2460	180pcs.	USD 1.440,-
1/2" 2462	120pcs.	USD 1.010,-
3/4" 2464	50pcs	USD 465,-
Thermostat. head	350pcs.	USD 2.680,-
1/2" 2419	12pcs	USD 133,-
3/4" 2421	10pcs.	USD 118,-
1" 2513	1pcs	USD 364,-
	TOTAL POS. 4.4	USD 6.234,-

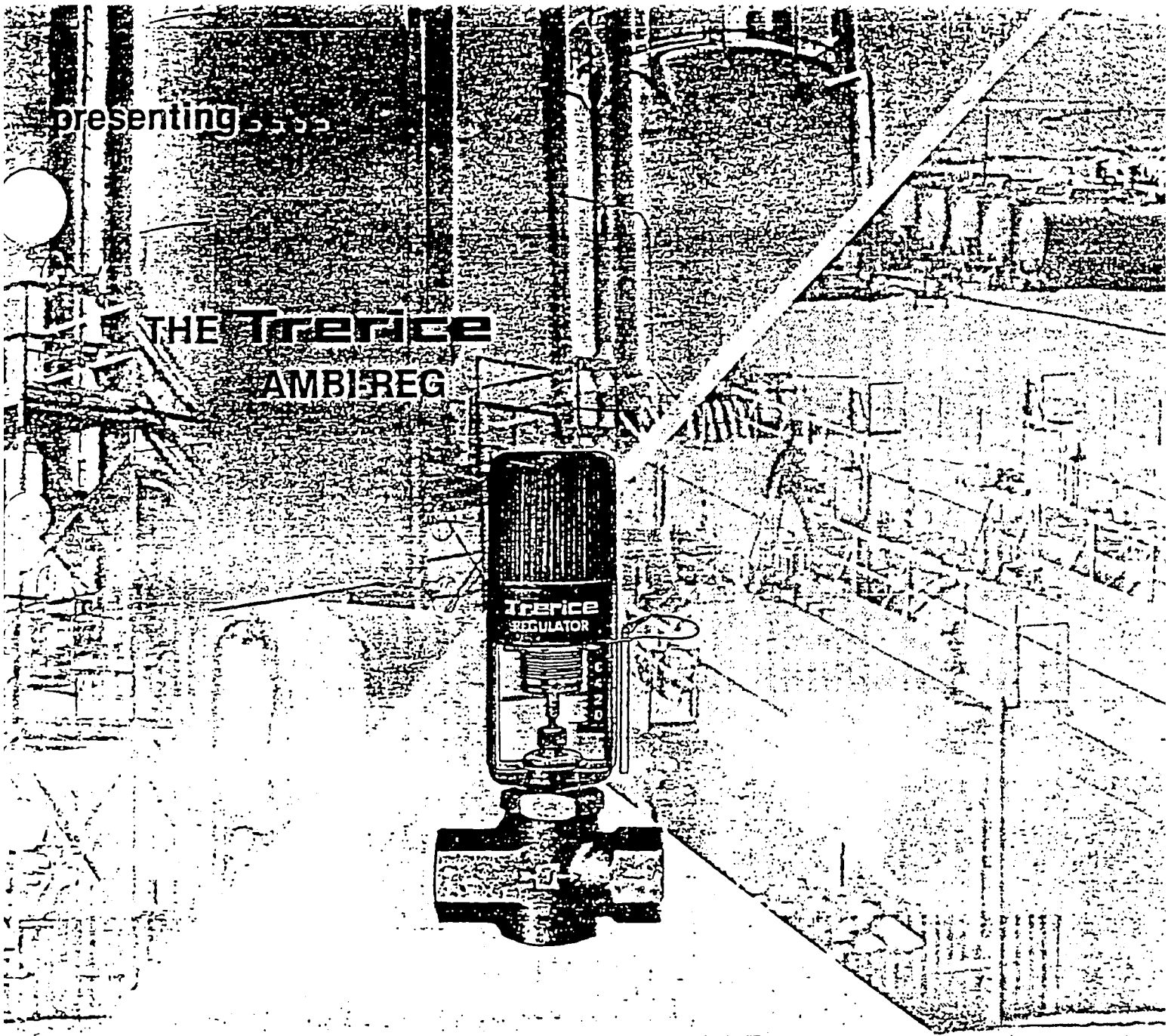

A SELF-CONTAINED TEMPERATURE CONTROL VALVE FOR USE ON PLANT STEAM TRACER LINES

Trerice®

H. O. Trerice Co.

MANUFACTURERS OF
TEMPERATURE & PRESSURE INSTRUMENTS

BULLETIN NO. 501

DISTRIBUTED BY:

Trerice

AMBI-REG

SELF-OPERATING TEMPERATURE REGULATOR

APPLICATION

The TRERICE AMBI-REG TEMPERATURE CONTROL VALVE has been designed to sense the ambient temperature of its immediate environment. It is therefore ideally suited for installation on steam tracer lines providing protection against freezing for outside pipelines, storage tanks, and plant instrumentation. It can be also used on other types of equipment where control is based on ambient temperature. The AMBI-REG is totally self-contained and performs its control function without an external power source such as electricity or plant air. Requiring little or no maintenance once installed, the TRERICE AMBI-REG SELF-CONTAINED TEMPERATURE REGULATOR can be relied upon to provide years of accurate, uninterrupted service, and continued energy savings.

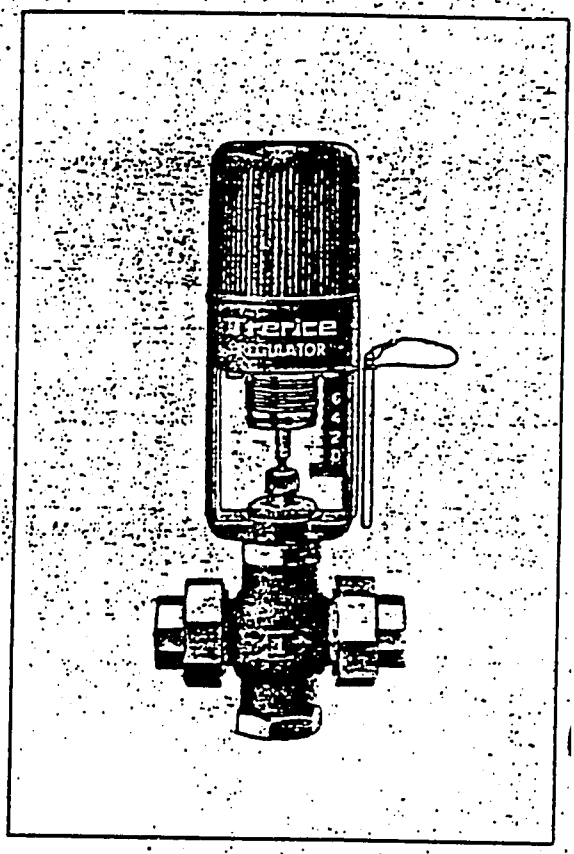

FEATURES

The TRERICE AMBI-REG REGULATOR when installed on your steam tracer lines will provide:

- – – ENERGY SAVINGS.
- – – PROTECTION AGAINST COSTLY FREEZE-UPS.

And because of its self-contained design will

- – – CUT DOWN ON MAINTENANCE COSTS.
- – – PROVIDE IN LINE SERVICIBILITY.

CONSTRUCTION

The TRERICE AMBI-REG is ruggedly built. The yoke and cap are heavy aluminum castings. Lifetime lubrication is incorporated in the adjustment screw bushing. The teflon valve packing is also self-lubricated. The adjustment spring and thermal system bellows are enclosed and protected from corrosive conditions. This regulator has been designed to insure its user years of trouble free service.

SPECIFICATIONS

The TRERICE AMBI-REG can be ordered with the following standard specifications.

PORT SIZES: ¼", 3/16", ¼", 3/8", ½", ¾", 1", 1¼", 1½", 2".

VALVE MATERIAL AND END CONNECTIONS: Bronze body, union ends — ½" thru 2", Cast steel body, screwed ends — ¾" and 1", Bar stock valve in brass, steel, 304 and 316 S.S. — ¼".

TRIM AND ACTION: Single seated, stainless steel trim, decrease in temperature causes the valve to open.

CONTROL RANGE: 20 to 70°F (–10 to 20°C) standard. For other ranges consult factory.

NOTE: OTHER VALVE BODY MATERIALS, SIZES, TRIMS, ACTIONS, AND CONTROL RANGES ARE AVAILABLE ON SPECIAL ORDER. CONTACT YOUR LOCAL TRERICE REPRESENTATIVE OR CONSULT THE FACTORY.

Trerice ACTUATOR AND VALVE SELECTION CHART

AMBI-REG ACTUATORS		
RECOMMENDED	RANGE	NUMBER
Freeze Protection 40 to 70°F.	20 to 70°F.	EA01

Actuator

VALVES — SINGLE SEAT — STAINLESS TRIM — TO CLOSE WITH TEMPERATURE RISE				
BODY MATERIAL	NPT CONN.	SIZE	NUMBER	
BRONZE Malleable Union Ends NPT Threads	½"	⅛"	164-0063.11A	Bronze Bodied Valve Assembly
		3/16"	164-0063.9A	
		¼"	164-0063.7A	
		⅜"	164-0063.5A	
		½"	164-0063.2A	
	¾"	¾"	164-0064.2A	
	1"	1"	164-0065.2A	
	1¼"	1¼"	164-0066.2A	
	1½"	1½"	164-0067.2A	
	2"	2"	164-0068.2A	
STEEL THREADED ENDS	¾"	⅛"	164-0148.1A	Cast Steel Valve Assembly
		3/16"	164-0148.2A	
		¼"	164-0148.3A	
		⅜"	164-0148.4A	
		½"	164-0156.1A	
		¾"	164-0153.1A	
	1"	⅛"	164-0148.51A	
		3/16"	164-0148.52A	
		¼"	164-0148.53A	
		⅜"	164-0148.54A	
		½"	164-0154.1A	
		¾"	164-0155.1A	
		1"	164-0152.1A	

MAXIMUM PSID (SHUT OFF DIFFERENTIAL)	
⅛" thru ½"	250
¾"	(140)
1"	80
1¼"	50
1½"	35
2"	20

EXAMPLE OF HOW TO ORDER

EXAMPLE: To order a ¾" bronze body TRERICE AMBI-REG, add proper valve number to actuator number EA01. Proper ordering number is EA01 with 164-0064.2A.

BAR STOCK BODY AMBI-REG AVAILABLE ONLY AS A COMPLETE UNIT AS LISTED		
BODY MATERIAL	NUMBER	
Steel	ENL25F01	Not Available As Separate Actuator or Body
Brass	ENK25F01	
303 Stainless Steel	ENM25F01	
316 Stainless Steel	ENN25F01	

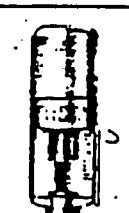

Bar Stock Valve

MK 86 AMBITEMP II

The JORDAN AMBIENT TEMPERATURE REGULATOR features infinitely ADJUSTABLE SET POINT, permits FIELD COMPENSATION for differences in location and the effects of radiant, convective and conductive heat. A highly visible STEM POSITION INDICATOR and TEMPERATURE SET POINT SCALE indicate correct operation at a glance; and an optional SURFACE CONTACT THERMOMETER is now available to instrument each installation fully - NO MORE GUESSING.

The Mark 86 AMBIENT TEMPERATURE SENSING REGULATOR is ideal as a steam tracing control valve. It is completely self-contained and automatically opens at a set ambient temperature allowing just enough steam to flow to provide protection against freezing or sub-normal process temperature conditions. The superior Jordan Valve SLIDING-GATE TRIM gives excellent control and shut-off. It is famous for resistance to wire-drawing, lower noise and long, maintenance-free service.

OPERATION:

Ambient temperature is directly sensed by the liquid-vapor filled Mark 86 actuator. A decrease in temperature decreases the vapor pressure against the diaphragm, allowing the control spring to expand and open the valve.

SPECIFICATIONS:

SIZES: ¼" through 2"

END CONNECTIONS: Threaded (N.P.T.), Union or Flanged

MATERIALS: Body - Ductile Iron, Bronze (¼" - 2"); Carbon Steel, Stainless Steel (½" - 2")
Trim - SS/BRZ for DI & Brz Body Valves, 303SS for CS Body Valves, 316SS for SST Body Valves
Seats - 303SS, 316SS, Jordanic, Jordanite, Teflon Coated
Actuator - 304SS, Liquid vapor filled
Yoke - Cast Iron
Stem Packing - Spring loaded teflon (500° max), Grafoil (above 500°F)

SERVICE: Tracing Steam (Also Suitable For Other Heating Fluids)

ACTION: Direct - Decrease in temperature opens valve:

BODY RATING: Ductile Iron up to 988 psi and 650°F; Carbon Steel and Stainless Steel up to 1480 psi and 650°F; Bronze up to 500 psi and 500°F depending upon specific construction. −20°F temperature limit on all materials. For other temperatures, consult factory.

C_v FLOW COEFFICIENTS & MAXIMUM PRESSURE DROP.

C_v*	VALVE SIZE	SEATING MATERIAL	MAX. ΔP, PSI SAT. STEAM & AIR	MAX. ΔP, PSI LIQUID
.84	¼" & ⅜"	Standard	125	125
1.6		Jordanic	325	150
		Jordanite	400	400
		Teflon Coated	375	375
2.5	½" & ¾"	Standard	125	125
4.4		Jordanic	250	125
		Jordanite	300	300
		Teflon Coated	300	300
6.4	1" & 1¼"	Standard	125	125
9.5		Jordanic	200	125
		Jordanite	250	250
		Teflon Coated	200	200
15	1½"	Standard	75	75
25	2"	Jordanic	150	75
30		Jordanite	175	175
		Teflon Coated	175	175

*Low flow trim available

CONTROL: The TEMPERATURE SET POINT SCALE shows the °F at which the valve is set to be wide open. Therefore, the °F at which the valve is closed — or begins to open — is determined by adding the number of °F of the appropriate span.

EXAMPLE: Standard spring; −10 to 40°F range; valve size 1". If a 1" valve with −10 to 40°F range and standard spring has a set point of 30°F on the TEMPERATURE SET POINT SCALE (by turning the spring adjusting wheel), then the valve will start to open at 45°F and be fully open at 30°F. Within the various spans, the AMBITEMP II will, of course, modulate the flow in accordance with the temperature sensed by the actuator.

OPTIONAL SUNSHIELD AVAILABLE: Eliminates sunlight "heat-up" of the actuator on bright sunny days which can result in poor set point control. It helps simulate the valve being installed in the shade.

RANGES OF TEMPERATURE CONTROL

STANDARD: WITH STD. SPRING #37			
-10 - 40	30 - 80	50 - 100	80 - 130
95 - 150	115 - 170	155 - 210	
VALVE SIZE	TEMPERATURE SPAN FROM 'CLOSED' TO 'OPEN'*		
¼" - ¾"	10°F		
1" - 1¼"	15°F		
1½" - 2"	20°F		

*For Ranges 115-170 & 155-210, Consult Factory

OPTIONAL: WITH LIGHT SPRING #152			
-10 - 27	25 - 60	45 - 80	75 - 110
95 - 130	115 - 150	145 - 180	155 - 190
VALVE SIZE	TEMPERATURE SPAN FROM 'CLOSED' TO 'OPEN'**		
¼" - ¾"	6°F		
1" - 1¼"	10°F		
1½" - 2"	13°F		

Consult Factory for other ranges.
**For Ranges 95-130, 115-160, 145-180, & 155-190, Consult Factory.

DIMENSIONS & WEIGHTS:

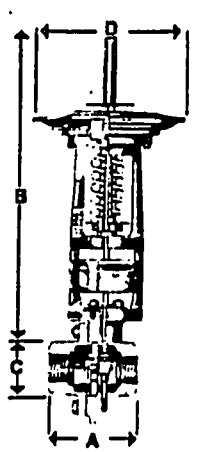

VALVE SIZE	DIMENSIONS IN INCHES									
	DUCTILE IRON & BRONZE					CARBON & STAINLESS STEEL				
	A	B	C	D	WT.	A	B	C	D	WT.
¼" - ⅜"	3¼	14⅝	2	7	18	—	—	—	—	—
½" - ¾"	3⅝	15	2¼	7	20	4	15	2¼	7	25
1" - 1¼"	4¼	15¼	2⅝	7	22	4¾	15¼	2⅝	7	28
1½"	4½	15½	2⅝	7	24	4⅞	15¾	2¾	7	32
2"	4½	15⅝	2⅝	7	24	5½	15⅞	3	7	38

36-HOUR SHIPMENT USUALLY AVAILABLE JORDAN VALVE

PRINTED IN U.S.A.

JORDAN VALVE

Bulletin MK 86 9/88

MARK 86

AMBITEMP II
MARK 86 AMBIENT TEMPERATURE REGULATOR

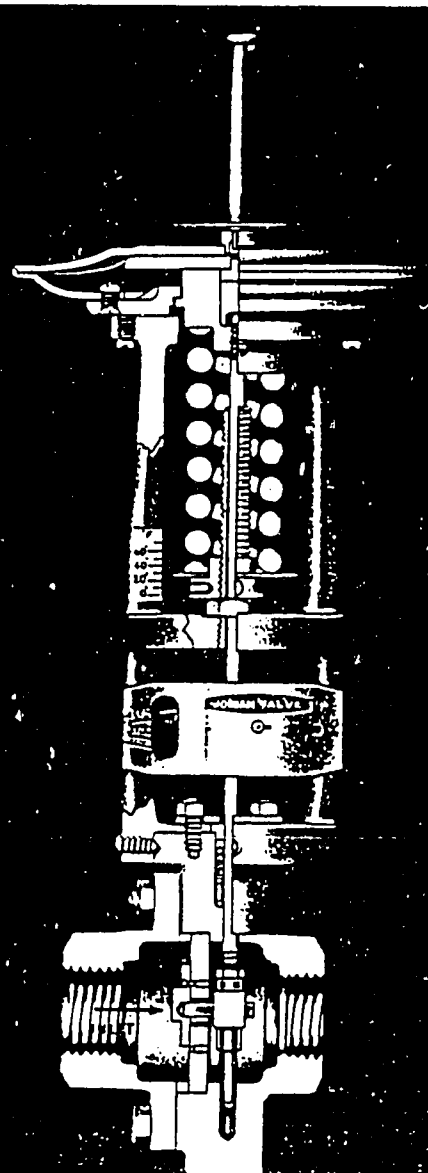

FOR STEAM TRACING
A SUPERIOR STEAM REGULATING VALVE COMBINED WITH A SELF-CONTAINED STAINLESS STEEL ACTUATOR THAT SENSES AMBIENT TEMPERATURE

- ★ PROTECTION AGAINST FREEZING OF OUTSIDE PIPELINES, TANKS, INSTRUMENTATION
- ★ SAVINGS OF STEAM ENERGY AND OPERATING COSTS
- ★ EXCELLENT CONTROL
- ★ LOW NOISE
- ★ LONG OPERATING LIFE
- ★ FIELD COMPENSATION FOR DIFFERENCE IN LOCATION AND THE EFFECTS OF RADIANT, CONVECTIVE OR CONDUCTIVE HEAT
- ★ OPTIONAL SURFACE CONTACT THERMOMETER

CALL YOUR JORDAN VALVE REPRESENTATIVE:

OR CALL JORDAN TOLL-FREE: 800-543-7311
(IN OHIO, CALL COLLECT: 513-533-5600)
IN CANADA, CALL TOLL-FREE: 800-354-0305

JORDAN VALVE
DIVISION OF RICHARDS INDUSTRIES, INC.
3170 WASSON ROAD, CINCINNATI, OHIO 45209-2381 U.S.A.
PHONE: 513-533-5600 TELEX: 21-4464
FACSIMILE: 513-871-0105

FAST DELIVERY
36-HOUR SHIPMENT USUALLY AVAILABLE

"ANTI-FREEZE PROTECTION"

"ENERGY CONSERVING"

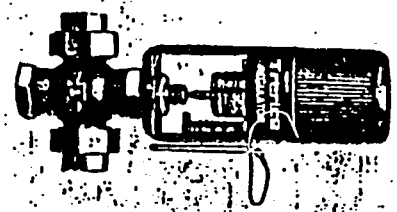

THE AMBI-REG AMBIENT SENSING CONTROL VALVE

H. O. Trerice Co.
12950 W. Eight Mile Rd.
Detroit, Mich. 48237
ADDRESS CORRECTION REQUESTED

HOME OF THE GRAND FACTORY

H. O. Trerice Co.

12950 W. EIGHT MILE RD.
DETROIT, MI, U.S.A. 48237
PHONE: (313) 399-8000
TELEX NO. 6715460 HO TRERICE · FAX NO. 3133997246

FACTORY BRANCH OFFICES

ATLANTA OFFICE
120 W. Wieuca Rd., Suite 205
Atlanta, GA 30342
Phone: (404) 256-4183

BOSTON OFFICE
633 Trapelo
Waltham, MA 02154
Phone: (617) 893-6153

CHICAGO OFFICE
2525 E. Oakton, Suite D-43
Arlington Hgts, IL 60005
Phone: (312) 640-8440

CLEVELAND OFFICE
4407 Brookpark Rd.
Cleveland, OH 44134
Phone: (216) 749-4100

COLUMBUS OFFICE
1735 Soshoni
Circleville, OH 43113
Phone: 614) 224-3313

DALLAS OFFICE
1140 Empire Central Place, Suite 104
Dallas, TX 75247
Phone: (214) 637-3375

FLINT OFFICE
129 N. Corbin
Holly, MI 48442
Phone: (313) 234-5603

INDIANAPOLIS OFFICE
3512 Rockville Rd., Suite 119B
Indianapolis, IN 46222
Phone: (317) 243-7371

KALAMAZOO OFFICE
2504 Main St.
Kalamazoo, MI 49007
Kalamazoo: (616) 388-3831
Grand Rapids: (616) 235-0550

LOS ANGELES OFFICE
7625 Rosecrans Ave., Suite 2
Paramount, CA 90723
Phone: (213) 633-3936

MILWAUKEE OFFICE
N58 W18335 Juniper Lane
P.O. Box 884
Menomonee Falls, WI 53051
Phone: (414) 252-3677

NEW ORLEANS OFFICE
950 Manson Rd.
Marrero, LA 70072
Phone: (504) 340-4981

NEW YORK OFFICE
1430 Bergen Blvd.
Fort Lee, NJ 07024
Phone: (201) 461-7035

PHILADELPHIA OFFICE
1325 O'Reilly Rd., Suite 3
Feasterville, PA 19047
Phone: (215) 364-5156

ST. LOUIS OFFICE
6973 Chippewa
St. Louis, MO 63109
Phone: (314) 645-5449

TAMPA OFFICE
5700 Memorial Hwy., Suite 113
Tampa, FL 33615
Phone: (813) 884-8180

TOLEDO OFFICE
5249 Secor Rd.
Toledo, OH 43623
Phone: (419) 473-2601

CANADIAN HEAD OFFICE & FACTORY

H. O. Trerice Co.

1935 HURON CHURCH RD.
WINDSOR, ONT., CANADA N9C 2L6
PHONE: (519) 966-5666
FAX NO. 5193667320 — TELEX NO. 06477942

MONTREAL OFFICE
415 Bourke Ave., Suite 154
Dorval, Quebec H9S 3W9
Phone: (514) 636-9110
TELEX NO. 05822686

TORONTO OFFICE
2395 Cawthra Rd.
Mississauga, Ont. L5A 2W8
Phone: (416) 276-2340
TELEX NO. 06961443

1188 PTD. U.S.A.

INDUSTRIAL THERMOMETERS

Furnished in 5, 7, 9 & 12" scale cases with standard ranges between −40 & 1000°F.

DIAL THERMOMETERS

Furnished in 3½, 4½, 6 & 8½" dial sizes, vapor, liquid, gas or mercury actuated, with standard ranges between −40 to 1000°F. Also bimetal dials in sizes 1¾", 3" and 5".

RECORDING THERMOMETERS

The L86000 10" chart recorder has a S.A.M.A. class 1B thermal system and is supplied with ranges from −40 to 1000°F.

OTHER TRERICE PRODUCTS

PRESSURE GAUGES

Furnished in 2½, 3½, 4½, 6 & 8½" dial sizes, bronze, steel, stainless steel bourdon tubes with standard ranges from 30" Vac. to 30,000 psi. Dry or liquid filled.

TEMPERATURE CONTROLLERS

Designed to control temperatures or pressures in vessels, tanks, etc. No. 87700 pneumatic, No. L84000 electric.

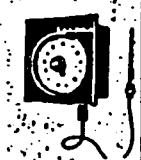

PRESSURE REDUCING VALVES

Furnished in self contained or pilot operated types. Valve sizes ¼" thru 6", steam, water, air, oil & gas.

STEAM TRAPS

Featuring the patented "ROTATING VALVE". Sizes ½" thru 2".

APPENDIX B
Calculations for Steam & Vents

Table B1. Steam Leaks and Uncontrolled Vents

Building Number	Quantity	Size (dia. mm)	Pressure (MPa)
2 basement	2 leak	1.6	0.5
2 basement	1 leak	6.4	0.5
2 roof	2 vents	22.0	0.5
Between #A & 2 at grade	1 leak	12.8	0.5
Southwest end 3D	2 leaks	1.6	0.5
12	1 vent	40.0	0.5
12	1 vent	90.0	0.5
Tunnel near 12	1 leak	12.8	0.5
Tunnel near 12	1 leak	6.4	0.5
Southwest end outside 9	1 leak	6.4	0.5
Tunnel at oil storage	1 leak	6.4	0.5
Boiler house	1 leak	1.6	1.4
Boiler house	1 leak	1.0	1.4
Boiler house	1 leak	1.0	0.5
Boiler Feed water gpm at 105 °C	5 leaks	pin holes	estimated 1/2

The leak/vent size and steam pressure determines the quantity of steam lost. Total energy loss was calculated based on a total of eleven leaks with a mean diameter of 6.4 mm at 0.5 MPa and two leaks with a diameter of 1.3 mm at 1.4 MPa.

11 x 209,000lbs/month x 12 x .38 x 1055 = 11,000 GJ/yr
2 x 10,806 x 12 x 1055 x 1.23 = 336 GJ/yr
Total = 11336 GJ/yr
11336/(43.6*0.6) = 434 metric ton heavy oil
Cost: 11336 x 3600 = 1,562,400 Kcs

APPENDIX C
Calculations for Uninsulated Piping

Pipe heat loss due to radiation and convection was calculated with the following heat transfer coefficient equations:

Hr = 0.172*E*((Ts/100)^4-(Ta/100)^4)/(Ts-Ta)

Hc = 1.016*(1/D)^0.2*(2/(Ts+Ta))^0.181*(Ts-Ta)^0.266

Q = (Hr + Hc)*(Ts - Ta)

where:

Hr = radiant heat transfer coefficient (BTU/hr ft2 °F)
Hc = convection heat transfer coefficient (BTU/hr ft2 °F)
E = emissivity of the surface (0.8 for rusty metal pipe)
Ts = temperature of the outside pipe wall (°R)
Ta = temperature of the ambient surrounding air (°R)
Ta = 11.5 °C for the compressor building (513°R)
Ta = 23.9 °C for the power house (535°R)
D = outside diameter of the pipe (inches)
Q = rate of heat transfer of the surface (BTU/hr ft2)

Conversion factor: Joules/hr m^2 = 11357 * BTU/hr ft2
°R = (°C * 9/5) + 32 + 460
meter = 0.0254 * inches

The total pipe heat loss is then calculated with the measured dimensions of the pipe.

Heat loss = Q * 3.14 * D * (pipe length)

The total pipe heat saved is calculated based on the effectiveness of 2" of insulation (0.7) and the nominal boiler fuel to steam efficiency (0.60).

Heat saved = Heat loss * 0.7 * 24 hr/day * 312 days/yr

Fuel saved = (Heat saved/0.60)/43.6 GJ/metric ton

Fuel saved (Kcs) = Fuel saved * 108 Kcs/GJ

Insulation Specifications:
Insulate steam and condensate return piping with Manville, Owens-Corning, Knauf or equal fiberglass insulation, 1-1/2 inches minimum thickness, with an all service jacket. Maximum fiberglass thermal conductance of 0.3 BTU inch/ft2 hr °F. Installed per the manufacturer's recommendations.

Table C1. Piping Heat Losses Estimate Building Number Two

Location	Surface Temp °C	Pipe Diamter mm	Pipe length meters	Trans. Coeff. MJ/HR *M2	Energy Loss MJ/HR	Heat Energy Loss GJ/YR	Pipe In Ener Savin Kcs/YR
Bsmnt.	104	40	3.6	4.23	1.91	14.30	1378.00
Cnd.pipe	103	40	53.2	3.59	23.99	179.64	17311.30
Cnd.pipe	125	100	27.4	4.74	40.78	305.36	29426.50
2B4Valve	150	180	3	5.81	9.85	73.76	7108.00
2B5Valve	150	80	3	6.20	4.67	34.97	3369.90
3B1Valve	145	110	1.5	5.90	3.06	22.91	2207.80
1-1	108	110	6.1	3.44	7.25	54.29	5231.70
2-1	56	40	6.1	1.14	0.87	6.51	627.30
3-1	50	40	6.1	0.94	0.72	5.39	519.40
4-1	109	40	6.1	2.92	3.00	22.46	2164.40
1-2	111	135	6.1	3.71	9.59	71.31	6920.10
Total	NA	NA	122.2	NA	105.69	791.40	76264.40
Average	NA	67	NA	NA	NA	NA	NA

Payback Calculation: Insulation Cost (materials and labor) = 81239 Kcs
Estimated Savings Per Year = 76264.4 Kcs/yr

Payback = (81239/76264.4)*12 months/yr = 12.8 months

Notes: Surface temperatures in excess of 120 °C indicate a steam pipe whereas less that 120 °C indicate a condensate return line.

"#Valve" denotes a quantity of uninsulated valves based on a fuel oil price of 3600 Kcs/metric ton (82.6 Kcs/GJ).

Recommended Insulation Thicknesses for **MINERAL FIBER** (Fiber Glass and Rock Wool)

PROCESS TEMPERATURE (°F)

NOMINAL PIPE SIZE (in inches)		150°	250°	350°	450°	550°	650°	750°	850°	950°	1050°
1/2	Thickness	1	1½	2	2½	3	3½	4	4	4½	5½
	Heat Loss	8	16	24	33	43	54	66	84	100	114
	Surf Temp	72	75	76	78	79	81	82	86	87	87
	Savings	**$5**	**$15**	**$27**	**$42**	**$61**	**$82**	**$108**	**$146**	**$172**	**$213**
1	Thickness	1	1½	2	2½	3½	4	4	4½	5	5½
	Heat Loss	11	21	30	41	49	61	79	96	114	135
	Surf Temp	73	76	78	80	79	81	84	86	88	89
	Savings	**$7**	**$22**	**$42**	**$64**	**$92**	**$125**	**$163**	**$208**	**$262**	**$325**
1½	Thickness	1	2	2½	3	4	4	4	5½	5½	6
	Heat Loss	14	22	33	45	54	73	94	103	128	152
	Surf Temp	73	74	77	79	79	82	86	84	88	90
	Savings	**$11**	**$31**	**$58**	**$90**	**$128**	**$175**	**$229**	**$294**	**$370**	**$461**
2	Thickness	1½	2	3	3½	4	4	4	5½	6	6
	Heat Loss	13	25	24	47	61	81	105	114	137	168
	Surf Temp	71	75	75	77	79	83	87	85	87	91
	Savings	**$13**	**$38**	**$71**	**$110**	**$157**	**$214**	**$282**	**$362**	**$457**	**$568**
3	Thickness	1½	2½	3½	4	4	4½	4½	6	6½	7
	Heat Loss	16	28	39	54	75	94	122	133	154	184
	Surf Temp	72	74	75	77	81	83	87	86	87	90
	Savings	**$19**	**$55**	**$100**	**$156**	**$223**	**$303**	**$400**	**$516**	**$683**	**$851**
4	Thickness	1½	3	4	4	4	5	5½	6	7	7½
	Heat Loss	19	29	42	63	88	102	126	152	174	206
	Surf Temp	72	73	74	78	82	86	85	87	88	90
	Savings	**$24**	**$68**	**$125**	**$195**	**$280**	**$381**	**$504**	**$650**	**$824**	**$1118**
6	Thickness	2	3	4	4	4½	5	5½	6½	7½	8
	Heat Loss	21	38	54	81	104	130	159	181	208	246
	Surf Temp	71	74	75	79	82	84	87	88	89	91
	Savings	**$34**	**$96**	**$176**	**$275**	**$395**	**$542**	**$718**	**$929**	**$1179**	**$1475**
8	Thickness	2	3½	4	4	5	5	5½	7	8	8½
	Heat Loss	26	42	65	97	116	155	189	204	234	277
	Surf Temp	71	73	76	80	81	86	89	88	89	92
	Savings	**$43**	**$121**	**$223**	**$348**	**$501**	**$688**	**$914**	**$1184**	**$1505**	**$1885**
10	Thickness	2	3½	4	4	5	5½	5½	7½	8½	9
	Heat Loss	32	50	77	115	136	170	220	226	259	307
	Surf Temp	72	74	77	81	82	85	90	87	89	91
	Savings	**$52**	**$148**	**$271**	**$424**	**$612**	**$841**	**$1117**	**$1449**	**$1844**	**$2311**

- Heat Loss = BTU Per Ft./Per Hr.
- Based on 65°F. Ambient Temperature
- Fuel Cost: $6 Per Million BTU
- Savings = $/Per Ft./Per Yr.

Users are advised to consult manufacturer's literature for specific product temperature limitations.

Mineral Fiber Thicknesses continue on next page ▶

51

PLATE NO. 11

FITTINGS, ETC.
Mitered Insulation Elbow Oversized Application

Mitered insulation elbows may be fabricated in the field or pre-fabricated using an adhesive to seal the miters together to form two halves of the elbow. Any of the pipe covering materials may be used to fabricate miters including flexible elastomeric insulation. The term "oversized" indicates any application that must be made large enough to compensate for protrusions at the connection between the pipe and fitting. Applications shown are appropriate for hot and moderate installations.

(A) Finishing or insulating cement covered with fabric.

(B) Pre-formed metal elbow cover, secured with screws — hot application.

Materials: Mitered segments of pipe covering, wires, bands or adhesives, insulating cement, canvas, pre-molded metal elbow cover, sheet metal screws.

1. Pipe.
2. Pipe insulation (shown in (A) with factory applied non-metal jacketing, (B) metal jacketing.) Jacketing extends under the fitting insulation and finish.
3. Mitered segments of pipe covering cut to form a tight fit. (Adhesive between miters on pre-fabricated applications or when required).
4. Glass fiber fill insulation (Optional — used as a means of support when the mitered elbow has not been pre-fabricated into two self-supporting halves.)
5. Wire or banding (unnecessary when pre-fabricated).
6. Pre-formed metal elbow cover secured with sheet metal screws.
7. Finishing cement applied to smooth surface.
8. Fabric applied with adhesive on the surface of finishing or insulating cement.

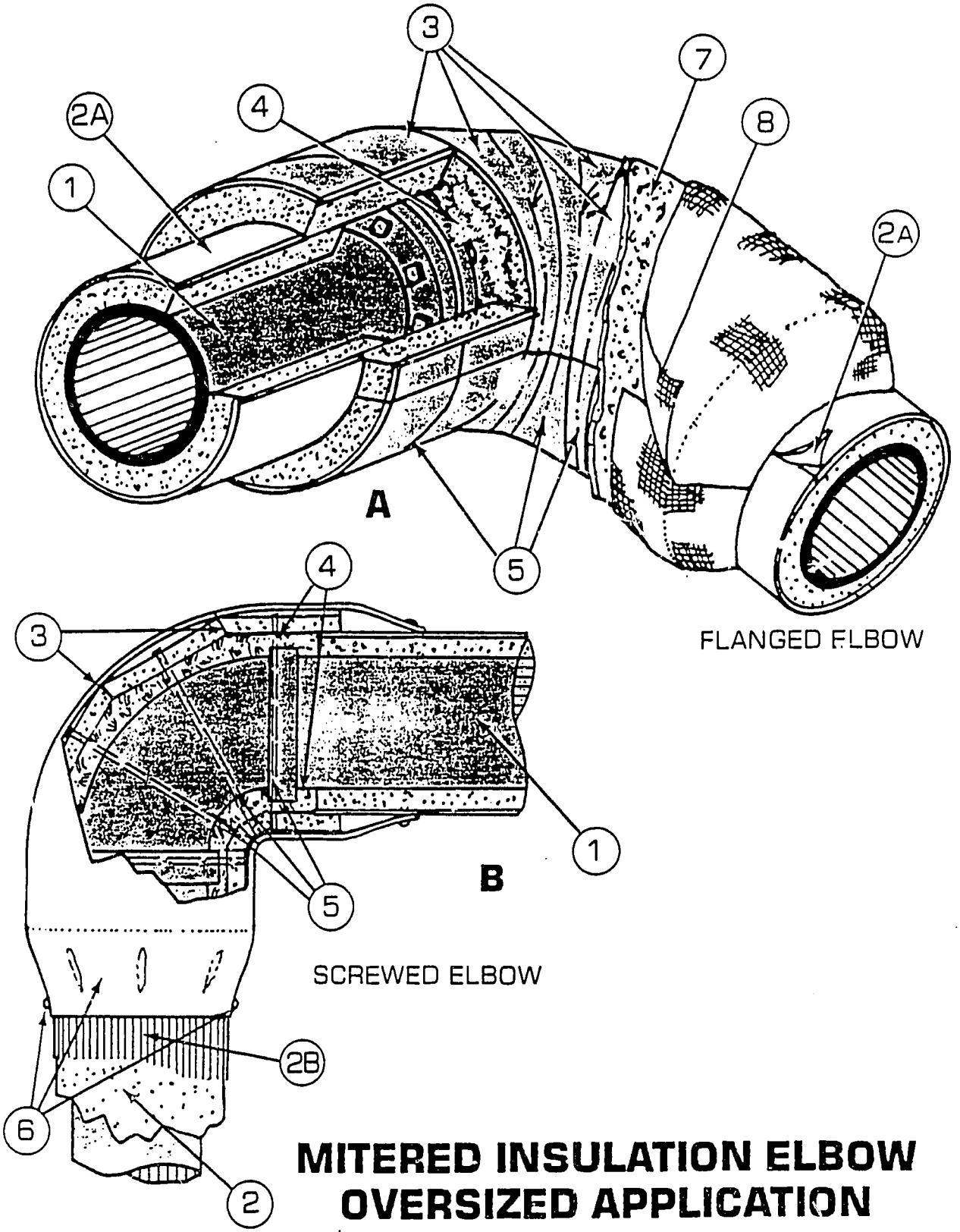

MITERED INSULATION ELBOW OVERSIZED APPLICATION

FITTINGS, ETC.

mica INSULATION STANDARDS
5/79

PLATE NO. 11

PLATE NO. 14

FITTINGS, ETC.
Field or Factory-fabricated Valve/Tee Insulation

The term "fabricated" applies to the construction of a custom sized and shaped insulation installation for fittings, etc., using common forms of insulation such as rigid blocks and pre-formed pipe covering segments. The fabrication may take place in the field, a fabrication shop, or the fitting insulation may be pre-fabricated by a manufacturer. Fitting covers may be similarly fabricated from jacketing materials, or purchased pre-fabricated from the manufacturer. Other finishes include the use of mastics, cements and reinforcing fabrics, or the use of pipe covering segments with factory-applied jacketing, sealed at the joints and bonnet area.

(A) Built-up Application

(B) Oversized Application

(C) Fabrication Components

Materials: Rigid pipe covering, block insulation, glass fiber or other fill insulation, adhesive, pre-fabricated metal valve cover and caulking.

1. Pipe.
2. Pipe insulation (shown with field-applied metal jacketing).
3. Collar of rigid pipe covering sized to clear the flanges.
4. Sleeve of oversized pipe covering sized to cover the body of the valve and overlap onto the flange collar (Insulation thickness is the same as that used on the adjacent piping.)
5. Sleeve of oversized pipe covering sized to cover the bonnet flange and fit snugly into the "V" cut out of the body sleeve.
6. Bonnet collar of rigid block insulation with cut-out for valve stem.
7. Adhesive at joints.
8. Glass fiber or other fill insulation (optional).
9. Caulking around valve stem cut-out (optional-used on cold or outdoors applications).
10. Pre-fabricated metal valve cover.

5/79

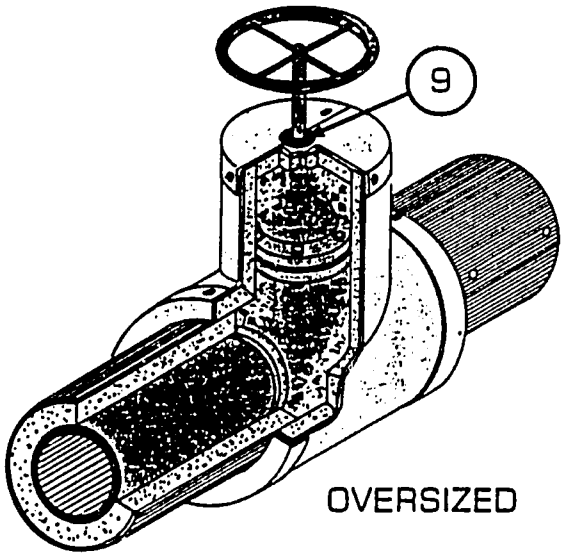

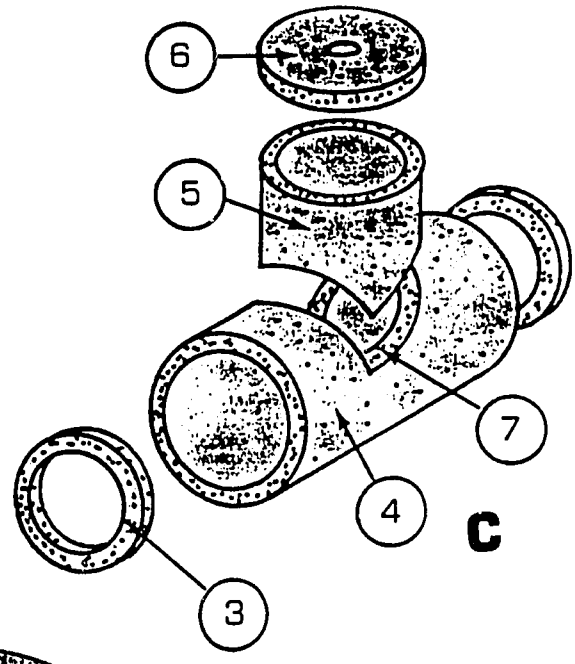

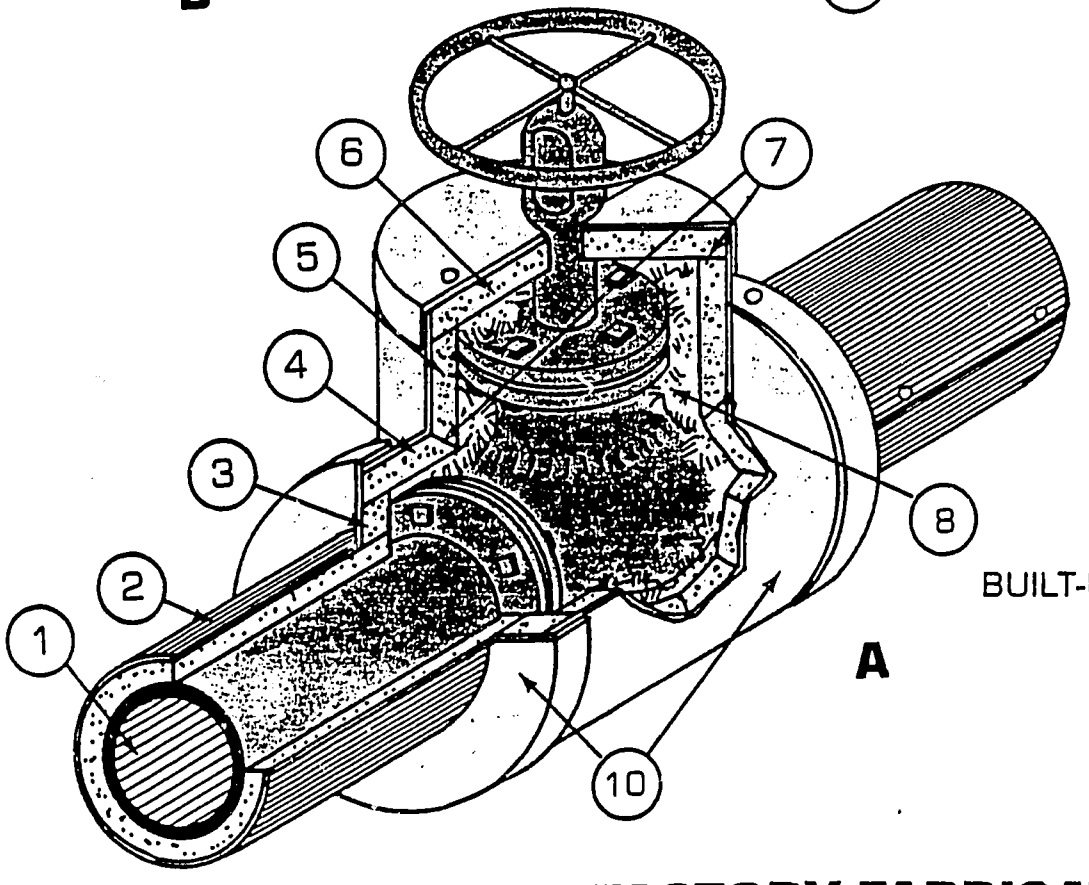

FIELD OR FACTORY-FABRICATED VALVE/TEE INSULATION

FITTINGS, ETC.
Cement Valve Insulation

Cement is useful in areas where clearances are minimal, surfaces are irregular and where maintenance or replacement is unlikely. On most valves, only the body of the valve is covered with the cement tapered off below the valve bonnet and extended out over the pipe covering. The cement application may or may not require reinforcement mesh or fabric depending on valve size, the thickness of the cement and other considerations.

The application illustrated on **Plate No. 16** shows a fabric finish and is appropriate on moderate and hot applications.

Materials: Mineral fiber and/or one-coat cement, reinforcing wire mesh or glass fabric, fabric covering, adhesive and/or cement.

1. Pipe.
2. Pipe insulation (shown with a factory applied jacket).
3. Layers of insulating cement.
4. Layer of reinforcing wire mesh or glass fabric embedded in the cement.
5. Finishing fabric adhered to the smooth cement surface with adhesive or mastic.

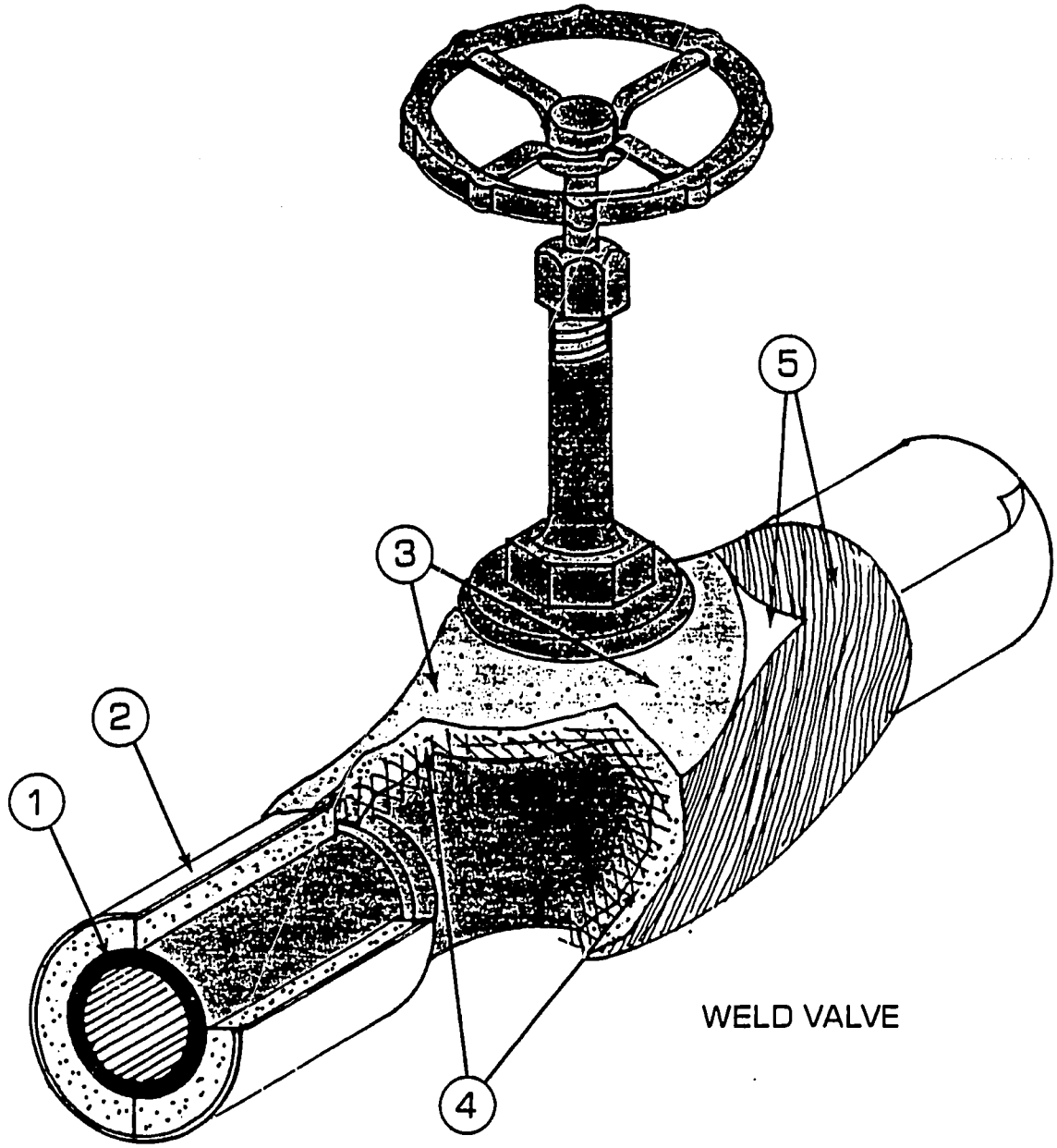

CEMENT VALVE INSULATION

FITTINGS, ETC.

mica INSULATION STANDARDS
5/79

PLATE NO. 16

VESSELS, TANKS AND EQUIPMENT

Small Diameter Vessels/Exhaust Pipe Covering

Hot vessels, tanks, exchangers, round breechings and exhaust ducts having outside diameters of less than 30" can be insulated with large radius pipe covering materials. High rib metal lath may be applied on installations over 600°F as shown on **Plate No. 22**. Alternate methods are the application of rigid blocks or mitered segments as illustrated on **Plate No. 23**.

(A) Vertical application on vessel

(B) Horizontal application on tube exchanger

Materials: Rigid pipe covering segments, discs of rigid block, fill insulation (either pieces of block insulation of glass fiber), sheet metal jacketing, sheet metal screws or pop rivets and stainless steel bands.

1. Vessel wall.
2. Insulation support ring.
3. Pipe covering segments secured with wire or bands.
4. Disk of rigid insulation cut to fit over head and inside pipe covering.
5. Loose fill insulation used as support for top disk.
6. Sheet metal jacketing.
7. Sheet metal screws or pop rivets as required.
8. Stainless steel bands as required.
9. Nozzle. (**See Plate No. 33**.)
10. Insulation cut or beveled away from flanges for bolt removal. Finish as required for temperature and exposure.

SMALL DIAMETER VESSELS/EXHAUST PIPE COVERING

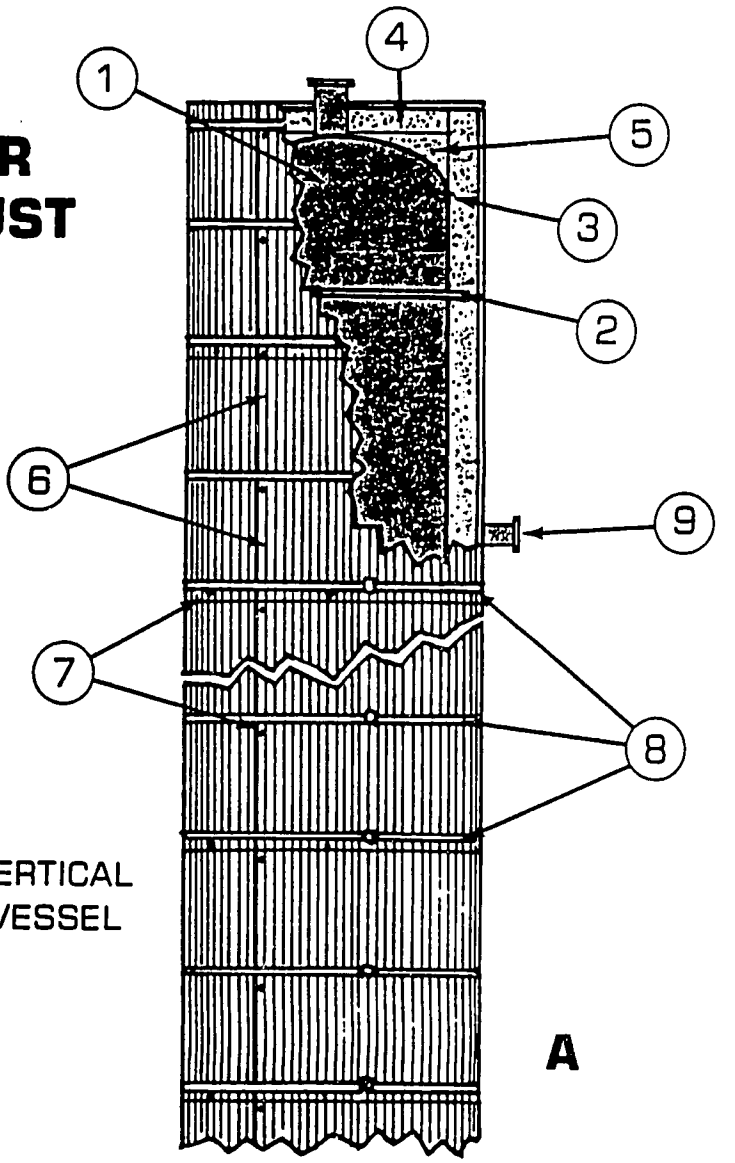

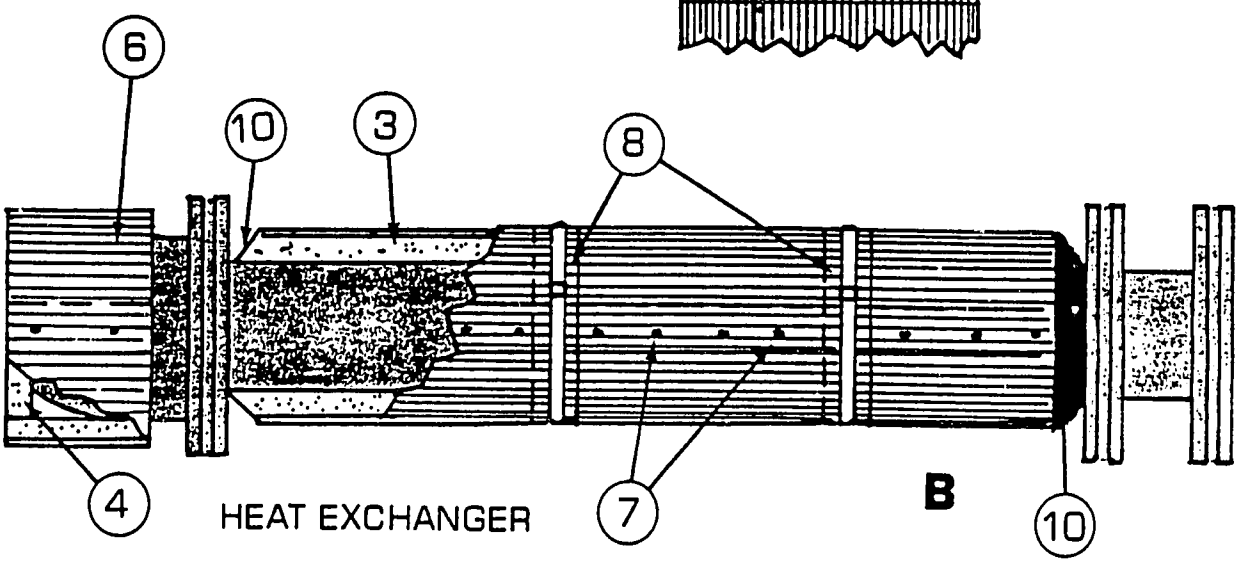

VESSELS, TANKS AND EQUIPMENT

mica INSULATION STANDARDS
5/79

PLATE NO. 30

PLATE NO. 47

REMOVABLE & REUSABLE INSULATION

Formed & Shaped Insulation Covers

Formed and shaped insulation covers are used on equipment and fittings such as valves, flanges, ells, strainers, etc., requiring removable and reusable insulation. The covers are made to conform to the shape of the surface with the curvature and contour pieces neatly mitered and sewed. The covers should have the same appearance as permanent insulation, and overlap and fit to the adjacent insulation. Covers can be produced in single layer for thicknesses up to 4", and in multiple layers for thicknesses over 4".

Materials: Mesh or fabric covered insulation, quilting washers, hooks, lacing wire and staples.

1. Valve.
2. Removable cover.
3. Machine stitching.
4. Metal stitching at edges.
5. Quilting washer.
6. Lacing hooks and wire.
7. Adjacent insulation.

3/83

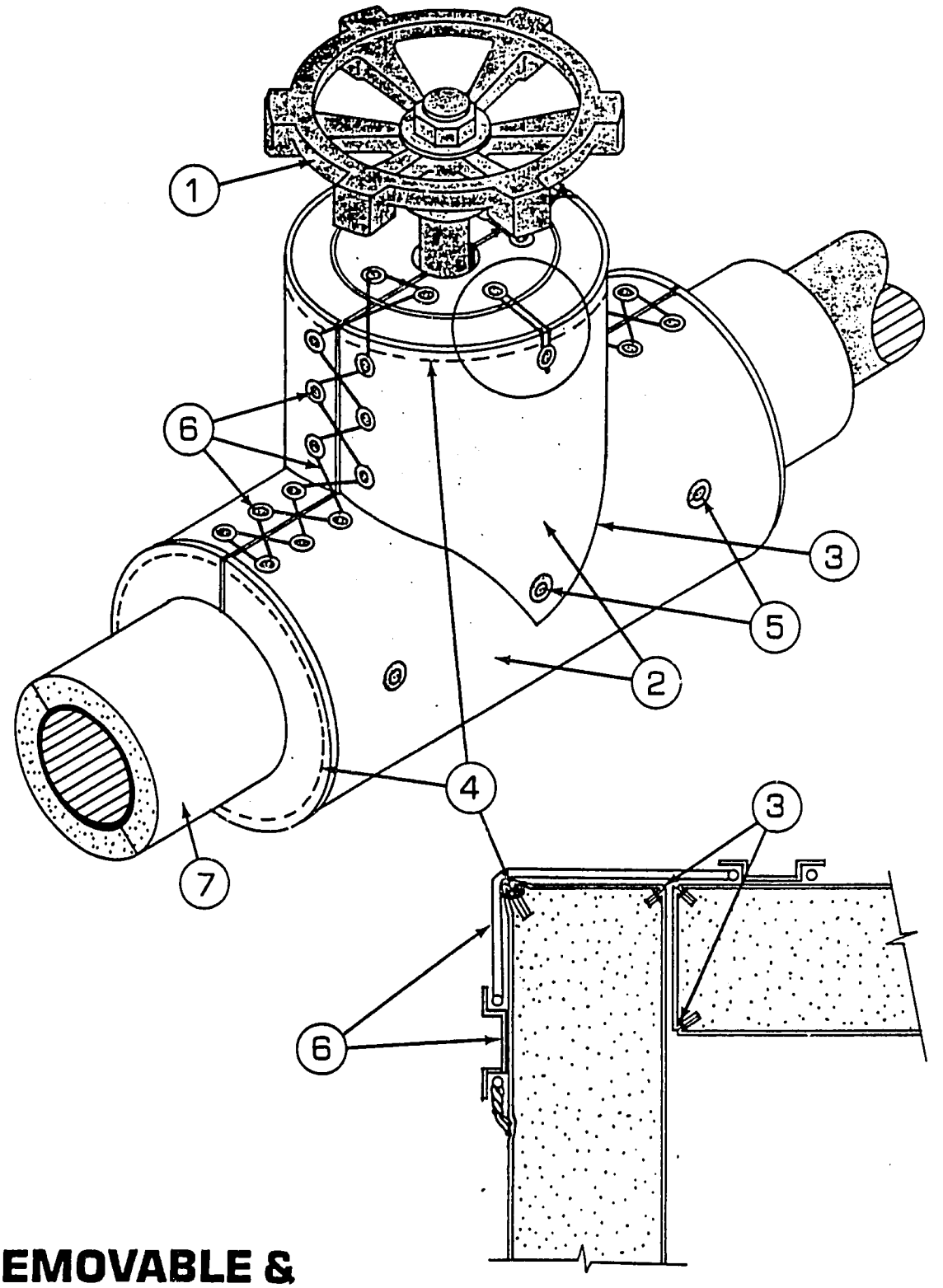

REMOVABLE & REUSABLE INSULATION

FORMED & SHAPED INSULATION COVERS

mica INSULATION STANDARDS
3/83

PLATE NO. 47

'61

APPENDIX D
Calculation for Improvement from 60% to 80% Condensate Return

When the condensate return rate is improved in a steam distribution system the net feedwater make-up rate is reduced and the quantity of boiler blowdown is reduced. In both instances, there is a net reduction in energy consumed.

Feedwater: It takes more energy to preheat well water than condensate to the 105 °C boiler feedwater inlet temperature.

Total Steam production for 1990: 28465 metric ton

Net make-up at 60% return:	28465*(1-0.6) =	10186 metric ton
Net make-up at 80% return:	28465*(1-0.8) =	5693 metric ton
Net reduction in make-up:	10186-5693 =	5693 metric ton

The difference in heating well water at 10 °C or condensate at 50 °C to obtain 105 °C is:

5693 metric ton* 4.186 MJ/ton °C * (60 - 10) / 1000 = 1191.5 GJ

Blowdown: In order to control the buildup of dissolved solids in the boiler water, a portion of the boiler water is blowndown to drain. The quantity of blowdown is determined by the feedwater composition, maximum boiler water concentration of dissolved solids, and the fraction of condensate return. Steam condensate does not contain dissolved solids. The more condensate returned to the boiler will result in less feedwater and reduced blowdown requirements. A 100% return system does not require continuous blowdown to control the boiler water solids level. The boiler system currently operates at 60% return of condensate, 4 to 8% blowdown, and with blowdown energy recovery flash separator (80% effectiveness). The 80% condensate return system will result in less blowdown and less energy lost.

Feedwater conductivity:	500 micro Siemans/cm
Max. Boiler conductivity:	5000 micro Siemans/cm

Concentration Factor: 5000/500 = 10

Net Blowdown (@60%) = 28465*(1-0.6)/(10-1) = 1265.1 metric ton/yr
Net Blowdown (@80%) = 28465*(1-0.8)/(10-1) = 632.6 metric ton/yr

Net Reduction in Blowdown = 1265.1 - 632.6 = 632.6 metric ton/yr

Lost Energy = (1-0.8) * 632.6 metric ton/yr * 4.186 MJ/metric ton °C * (360-100)

= 137699 MJ/yr = 137.7 GJ/yr

Total Energy Lost = 1191.5 + 137.7 = 1329.2 GJ/yr

Total fuel savings for increasing the condensate return rate from 60% to 80% is:

In equivalents of fuel oil fired in the boiler at a 60% fuel to steam efficiency:

1329.2 GJ/yr/(0.6 * 43.6 GJ/metric ton) = 50.8 metric ton/yr

or 50.8 metric ton/yr * 3600 Kcs/metric ton = 182917 Kcs/yr

APPENDIX E
Heat Recovery from Lumber Drying Kilns

The kilns in the basement of building 3A exhaust hot air 24 hours a day at 45 °C. These kilns will be replaced in about two years. A study was done to determine the payback for an air-to-air heat recovery system. The payback was calculated to be 2.9 years. The air flow was determined with a pitot tube flowmeter and manometer built at the site by the plant machine shop. Static pressure, velocity pressure, duct diameter and exhaust temperature were measured and used to determine air flow.

A design sketch for the air-to-air exchanger system follows. Also, attached are exchanger design details from a representative manufacturer of air-to-air exchangers. Other manufacturers of equivalent equipment would be acceptable.

The estimated cost for the purchase and installation of the equipment is 388,000 Kcs. The saving in oil is 38 metric tons/yr. Operating cost of the new fan for electric power is 20,340 Kcs, the cost of the oil saved is 156,978 Kcs. The payback = 388,000/(156,978-20,340) = 2.9 yrs.

Figure E1. Heat Recovery From Lumber Drying Kiln

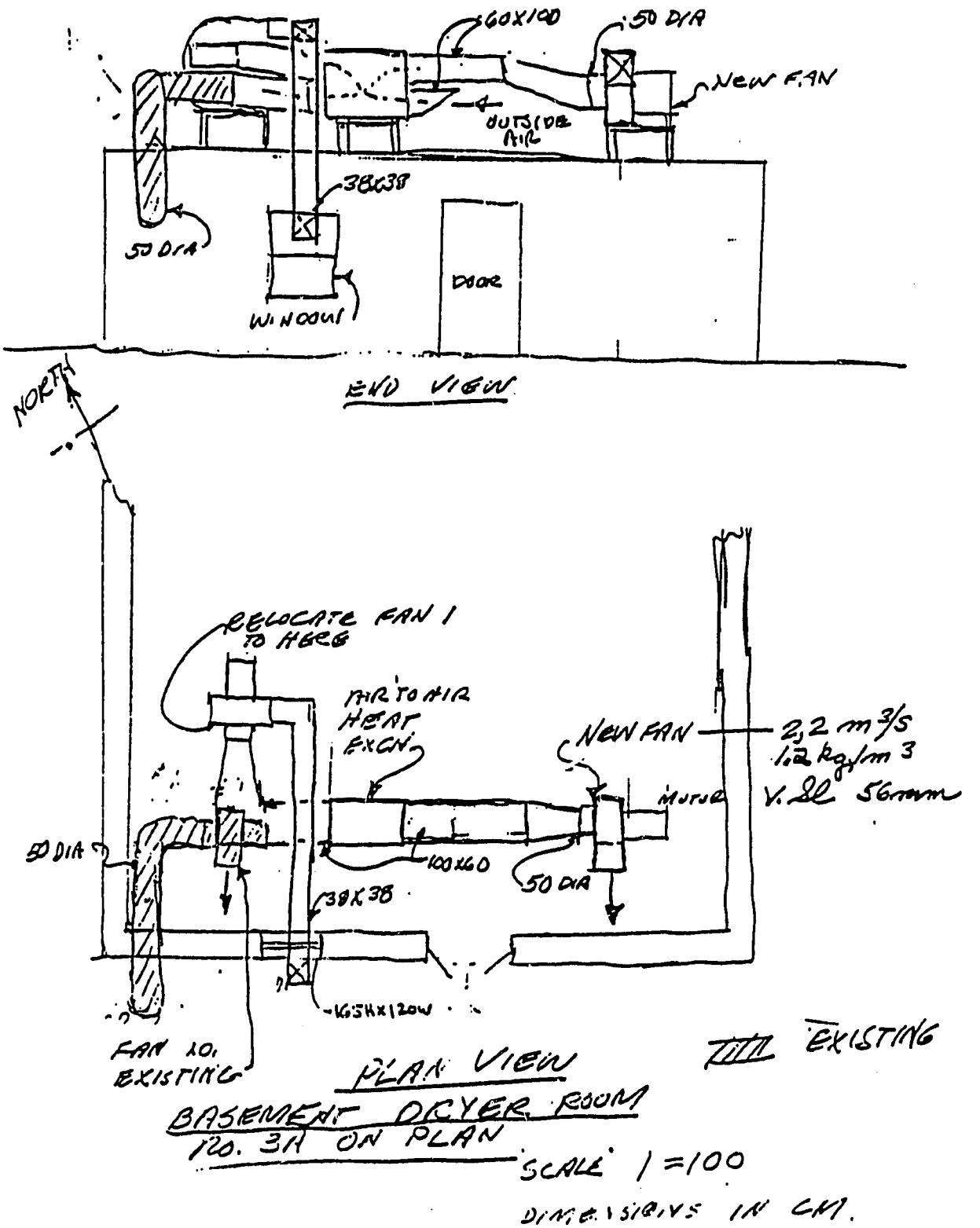

Specifications

When specifying TEMP-X-CHANGER modules, the following paragraphs can be used to insure that the selected equipment is provided.

FM Series

Furnish and install a fixed plate air-to-air heat exchanger which shall be constructed of a continuously folded sheet of series 1100 alloy aluminum, minimum 0.012" in thickness. The aluminum heat transfer plate surface shall be embossed with a herringbone-type convolution pattern designed for maximum efficiency. Embossment shall also include a pattern of dimpled supports designed to fix plate spacing at 7/16" and to provide specified exchanger performance at system differential pressures up to 5" w.g. The exchanger shall be suitable for temperatures of 200°F (option to 400°F). The casing material shall be 16 gauge galvanized steel with integral flanged duct connections. The casing shall incorporate a bolted and gasketed access panel for inspection of the exhaust plate surfaces. The heat exchanger shall be capable of 4500 SCFM exhaust at 0.8 in w.g. ΔP (max.), 4500 SCFM supply at 0.8 in w.g. ΔP (max.), based upon exhaust entering conditions of 450 °Fdb, 65 °Fwb and supply entering conditions of 90 °Fdb, ____% RH. Minimum exchanger efficiency to be 60 %. Airflow through the exchanger shall be of the counterflow configuration and both airstreams shall be (horizontal or vertical) ____ in flow.

The heat exchanger size shall be ____ W x ____ H x ____ L Model FM Series, 60 as manufactured by United Air Specialists, Inc.

Accessories shall include—(see BP and WW specifications).

Bypass Accessory

The bypass feature of the heat exchanger shall be constructed to incorporate a bypass plenum in the casing. Dampers shall be constructed of 16 gauge steel and operated by a modulating motor controlled by a roomstat/ductstat furnished but installed by others. The bypass may be used as a temperature control feature or as frost control where local conditions may tend to enhance the formation of frost.

Waterwash Accessory

Provide modified plate configuration and a factory-manufactured and installed removable waterwash manifold. Manifold shall be manufactured from 1-inch ID copper tubes manifolded to individual 1/4" spray tubes which are inserted through the full length of the air passage.

United Air Specialists, Inc., having a policy of continuous product improvement, reserves the right to make changes in design and specification without notice.

FM Series

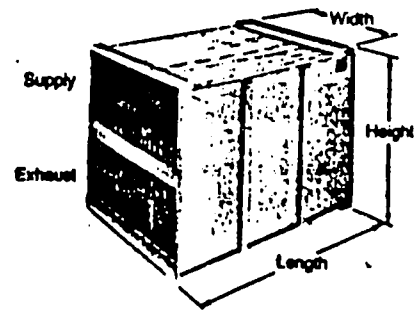

Dimensions (In Inches)

Model No.	Width	Height	Length
FM-80	51	51	67
FM-60	39	51	67
FM-50	33	51	67
FM-40	27	51	67
FM-30	21	51	67
FM-20	27	27½	67
FM-15	21	27½	67
FM-10	15	27½	67

FIGURE 2-11

Design Considerations

Ductwork

As with all mechanical equipment in an air handling system, good design practices should be followed when designing ductwork layouts. Some points to consider are:

1. Provide smooth entry and exit transitions, avoiding abrupt elbows or offsets which can generate turbulence or unsatisfactory airflow. Utilize turning vanes in elbows to equalize airflow as it enters the TEMP-X-CHANGER.
2. Seal ductwork to avoid air or condensate leakage.
3. Insulate ductwork and TEMP-X-CHANGER to insure minimal heat loss, maximum performance and protection against unequal expansion.
4. Provide access into ductwork for inspection of TEMP-X-CHANGER, and if equipped with waterwash accessory, removal of waterwash manifold.
5. The use of flexible connections are recommended between the module and ductwork where temperatures would cause unequal expansion.
6. All ductwork should be supported independently to eliminate any strain on the module casing.

Pressures

In the interest of good design practices, extreme differential pressures between the exhaust and supply airstream should be avoided in a plate type heat exchanger.

1. Fan arrangement should allow for a draw-thru/draw-thru, or blow-thru/blow-thru operation.
2. Where cross-contamination of the supply air is a concern, provide for negative pressure on the exhaust side of the TEMP-X-CHANGER.
3. Provide fan interlock if high static differential conditions can occur.
4. For blow-thru/draw-thru fan arrangement or differential pressures in excess of 5" across the TEMP-X-CHANGER plates, consult UAS Applications Engineering.

Frosting

Frosting is a condition that may exist when the exhaust leaving temperature of the TEMP-X-CHANGER is below 32°F. Frost or ice could form on the leaving edge and block passage of the air. Generally, frosting is not a problem because of the wide plate spacing found in the TEMP-X-CHANGER. Frosting rarely occurs unless outside supply temperatures fall below 0°F and exhaust temperatures are less than 75°F with low moisture content.

Moisture has a major effect on frosting because of the latent heat involved. The higher the moisture content, the less likely the conditions for frosting will occur. Although the TEMP-X-CHANGER is considered a sensible heat exchanger, the performance calculations take into account latent heat found in the moist airstream, in the form of enthalpy (Δ h).

If frosting is anticipated in the design, there are a number of ways to control the condition.

1. The most common is to bypass the supply air until the exhaust air can heat the plates enough to defrost the temporary condition.
2. Shut down supply fan while continuing to exhaust.
3. Preheat the entering supply temperature when sensing an outlet temperature below freezing.
4. Bypass a quantity of the supply air to maintain a 33°F exhaust air leaving temperature.

Drains

Horizontal TEMP-X-CHANGERs are provided with vertical or horizontal drains for control of condensate or waterwash drainage, as shown on submittal drawings. Some guidelines to follow during the design, planning and installation are:

1. Entering exhaust airstream to be at drain end of TEMP-X-CHANGER.
2. Slope TEMP-X-CHANGER 1" toward drain.
3. Trap drain to prevent air leakage.
4. Protect exterior unit drains from freezing.

Vertical TEMP-X-CHANGERs must be provided with drains in ductwork and should be trapped and protected as in Steps 3 and 4 above.

Considerations should be made for a drain pan to control overflow and leaking ductwork conditions in interior installations.

Filters

All supply air should have mechanical filters installed prior to the TEMP-X-CHANGER module to prevent dust and particulate from entering the system. If the exhaust airstream is dirty or contains particulate, prefilters to reduce loading of the TEMP-X-CHANGER should be considered.

Dries Associates, Inc.
PROFESSIONAL ENGINEERS
7457 ELMWOOD AVE. ■ MIDDLETON, WI 53562 ■ TELEPHONE (608) 831 6612 ■ FAX (608) 831 5508

FAX 011-42-2-258556 March 22, 1991

TO: WILLIAM C. DRIES

Number of pages: Two

Vyron quote as follows:

One (1) TEMP-X Changer FM-60
Total Net Price $5,720.00

Air freight Cost to Prague $1,820.00

Unit can be shipped in two weeks from time of order placement, if order is placed in a couple of days. Otherwise, ship time is unknown.

One (1) GREENHECK MODEL SWB-16, 5 HP, 460 volt/
3 ph/60 HZ $1,052.00

However, the following may be required for Europe:

One (1) GREENHECK Model SWB-20, 5 HP, 380 volt/
3 ph/50 HZ $1,270.00

Air freight for exhaust fan to Prague . . $1,531.00

Dries Engineering assumes responsibility at Prague Airport.

Page 2 follows with Vyron's phone, address, and Gregory Menting as rep.

Pete

QUOTATION

Vyron Corporation

1011 North Mayfair Road, Milwaukee, Wisconsin 53226. Tel: (414) 257-0211
1011 21st Avenue South, Wisconsin Rapids, Wisconsin 54494. Tel: (715) 421-2100
Milwaukee WATS 1-800-472-7338

Q91032104/GM

TO

PROJECT

Dries Engineering

DATED: 3/21/91

We are pleased to submit the following quotation:

TEMP-X-CHANGER

One (1) FM-60

-unit to be shipped in 2 weeks from time of order placement.

TOTAL NET PRICE $5720.00

AIR FREIGHT: Cost of air freight to Prague, Czechoslovakia is $1820.00

Dries Eng. Assumes responsibility at Prague Airport

71

APPENDIX F
Air Balance on Production Building No. 2

Air flow was estimated for building No. 2 by observing the number of exhaust intakes and exhaust ducts leaving the building as well as the name plate rating of the large makeup air unit.

The estimates were used to determine the potential for heat recovery from the exhaust; the amount of heat that could be recovered is small because the system operates about 2,000 hr/yr and the discharge temperature is low. About 0.49 GJ/hr could be recovered and this will save 133,400 Kcs/yr.

Story	Air Supply	Exhaust Air
4	0	0
3	0	0
2	48,000 cfm ($1830\ m^3$)	19,000 cfm ($545\ m^3$)
1	0	32,000 cfm ($914\ m^3$)
Basement	0	19,000 cfm ($542\ m^3$)
Total	48,000 cfm	70,000 cfm

Exhaust to the Boiler house is estimated at 38,000 cfm based on duct diameters and velocity estimated at 4,000 feet/min.

Possible heat recovery 11 °F, 38,000x11x1.1 = 459,000 BTU/hr., or 459,00x1.055 = .485 GJ/hr. Cost of wasted heat = .485x137.7 Kcs = 66.7 Kcs/hr. Yearly cost = 2000x66.7 = 133,400 Kcs.

The cost of heat recovery equipment is estimated at 1,252,800 Kcs. The payback would be about 9.5 years.

APPENDIX G
Heavy Oil Burner Modification Specification

1. Scope (Quantity 2, two burners or one boiler)

   a) Burner gun assembly which includes compressed air atomizing heavy oil nozzle and connections for compressed air and heavy oil. Four to one heavy oil modulation turndown.

   b) Electromechanical actuated fuel oil metering assembly, modulation of the heavy oil and atomizing air, connections for the burner gun, oil supply, oil return, and compressed air.

   c) Electromechanical combustion air damper actuator (damper existing provided by owner).

   d) Manual firing rate controller, control by electric switches located in the boiler control station.

   e) Spare parts.

2. Design Conditions

a) Heavy Oil #6 Flowrate	- min 32 gph, max 127 gph
b) Boiler Capacity (total)	- 26,432 lb/hr @ 250 psi
c) Heavy Oil Supply	- Pressure 360 psi - Temperature 248 °F
d) Compressed Air Supply Pressure	- 100 psi
e) Combustion Air Temperature	- 302 °F
f) Electric Power	- 220V, 50 Hz

3. Operation

   a) Combustion air and fuel metering to modulate simultaneously to provide the proper combination of air/fuel throughout the firing range.

   b) Oil Nozzle/Burner Gun to be purged automatically with compressed air upon shutdown.

4. Provide with the quote the following:

   a) dimension diagram for the nozzle, gun assembly, fuel metering assembly, and combustion air damper actuator.

   b) piping and instrumentation diagram (clearly show provided items).

c) special application information or instructions.

d) price (delivery to Albreichtice, Czech).

e) delivery schedule.

Figure G.1 Heavy Oil Burner Modification Specification

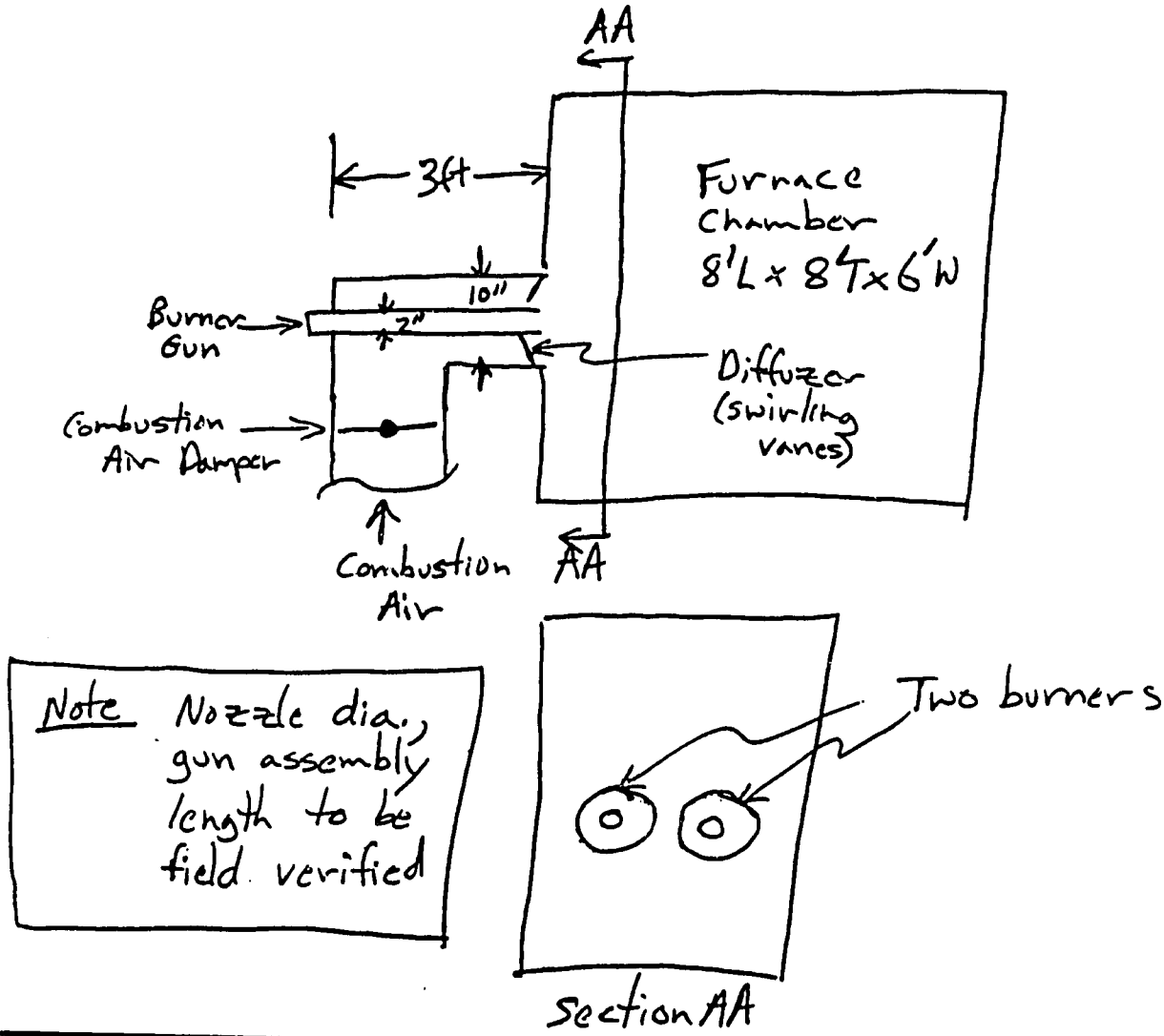

Note Nozzle dia., gun assembly length to be field verified

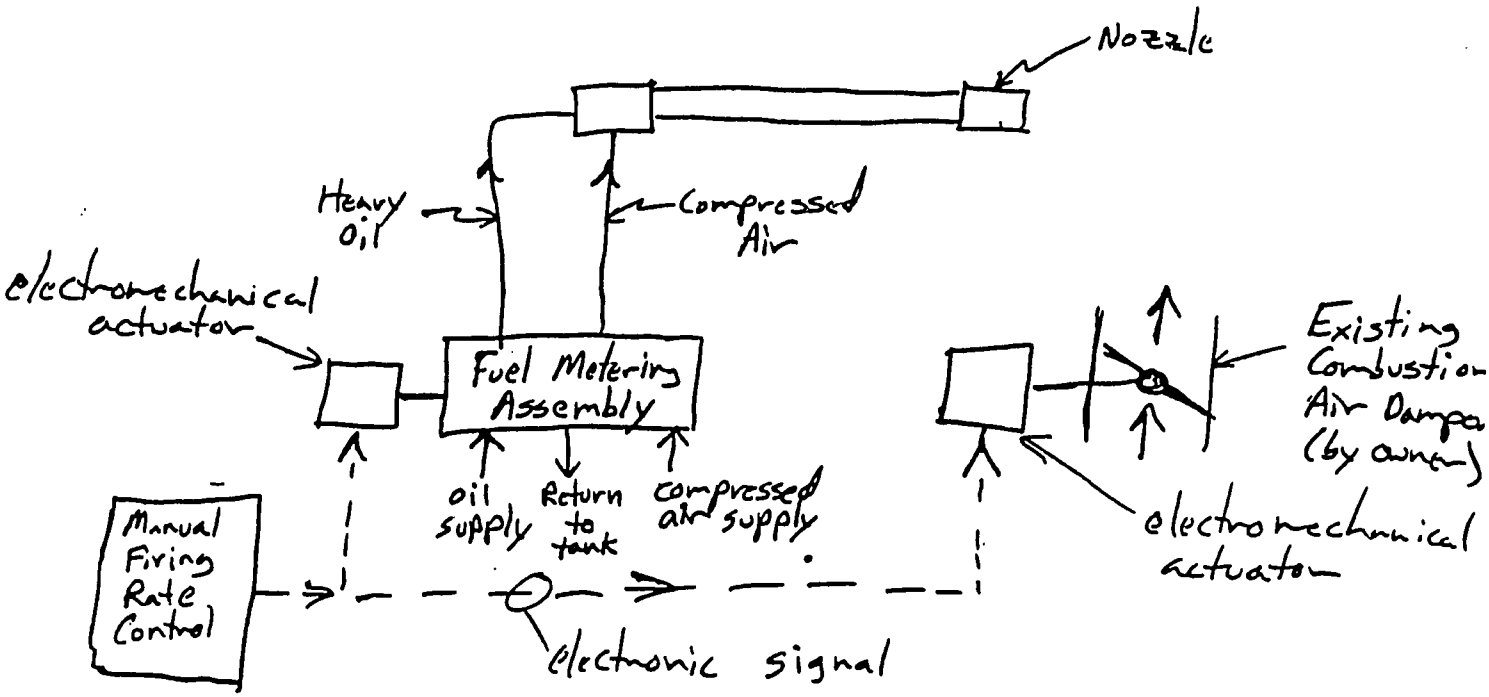

APPENDIX H
Miscellaneous

Průběh výroby tepla na kotli ve s.p. Tofa Albrechtice v J.h.

Měsíční výroba tepla (páry). Údaje z roku 1990.
Parametry páry 1,37 MPa, 360°C, enthalpie cca 3050 kJ.kg^{-1}

měsíc	oil.	množství páry (t) ton steam	výroba tepla (GJ)
LEDEN	270 t	3 795	11 575
ÚNOR	230 t	3 448	10 515
BŘEZEN	125 t	2 968	9 052
DUBEN	170 t	2 258	6 886
KVĚTEN	170 t	2 203	6 718
ČERVEN	70 t	1 358	4 141
ČERVENEC	50 t	940	2 868
SRPEN	100 t	1 694	5 166
ZÁŘÍ	140 t	2 079	6 340
ŘÍJEN	130 t	2 149	6 553
LISTOPAD	160 t	2 533	7 725
PROSINEC	228 t	3 040	9 268
Roční suma	3	28 465	86 807

Denní průběh výroby tepla (páry)

měsíc	hod.	tuny páry ton steam	hod.	
LEDEN January	6.00	8,1	17,00	6,7
prac. den	7,00	8,2	18,00	4,7
work day	8,00	7	19,00	4,6
	9,00	8,1	20.00	4,7
	10.00	8,2	21.00	5,0
	11.00	8	22.00	4,7
	12.00	7,2	24.00	4,7
	13.00	6,2	1.00	4,2
	14.00	6	2.00	4,1
	15.00	4,6	3.00	4,7
	16.00	6	4.00	4,7
			5.00	8,8
			Celkem za 24 h	143,9

	hod.	tuny páry	hod.	tuny páry
ČERVEN June	6.00	3,5	18.00	2
prac. den	7.00	3	19.00	1,2
work day	8.00	3	20.00	0,8
	9.00	3	21.00	0,8
	10.00	1,5	22.00	0,5
	11.00	1,5	23.00	0,8
	12.00	1	24.00	0,5
	13.00	1,2	1.00	0,5

14.00	0,8	2.00	0,7
15.00	2	3.00	0,5
16.00	1	4.00	0,8
17.00	1,5	5.00	3,6
		Celkem za 24 h	35,7

	hod.	tuny páry	hod.	tuny páry
LEDEN January				
den prac.	6.00	4,0	18.00	4,6
klidu	7.00	4,5	19.00	4,8
week end	8.00	4,6	20.00	5,0
	9.00	5,1	21.00	4,2
	10.00	4,2	22.00	3,8
	11.00	4	23.00	3,6
	12.00	4,2	24.00	3,8
	13.00	3,8	1.00	3,3
	14.00	4,0	2.00	3,6
	15.00	4,2	3.00	3,8
	16.00	3,6	4.00	3,5
	17.00	4,3	5.00	3,5
			Celkem za 24 h	98

	hod.	tuny páry	hod.	tuny páry
ČERVEN June				
den prac.	6.00	0,9	18.00	1,4
klidu	7.00	0,8	19.00	1,6
weekend	8.00	2,1	20.00	0,8
	9.00	2,4	21.00	0,6
	10.00	1,2	22.00	0,6
	11.00	1,0	23.00	0,5
	12.00	0,8	24.00	0,8
	13.00	0,8	1.00	0,6
	14.00	0,6	2.00	0,5
	15.00	0,8	3.00	0,8
	16.00	1,2	4.00	0,6
	17.00	1,6	5.00	1,2
			Celkem za 24 h	24,2

Měsíční spotřeba el. energie v kWh - údaje r. 1990

měsíc	kWh ze sítě	Kčs	kWh vl. výroba	měsíc	kWh ze sítě	Kčs	kWh vl. výroba
leden	231 800	127 667,-	23 000	červenec	157 800	107 487,-	0
únor	211 400	118 382,-	20 000	srpen	233 400	134 010,-	0
březen	192 800	111 259,-	21 600	září	233 500	133 188,-	0
duben	216 000	121 193,-	20 900	říjen	223 200	130 243,-	0
květen	221 800	123 044,-	14 900	listopad	236 900	140 520,-	0
červen	218 300	127 759,-	0	prosinec	202 100	193 993,-	0
				Celkem	2 579 400		100 400

průměrné roční 1/4 hod. maximum 705 kW

průměrná cena za 1 kWh v roce 1990 byla 0,558 Kčs

Denní průběh spotřeby el. energie v kWh

	hod.	kWh	vl. výroba kWh	hod.	kWh
LEDEN January					
prac. den	6.00	336	80	18.00	182
work day	7.00	6[illegible]3	190	19.00	168
	8.00	642	200	20.00	154
	9.00	572	180	21.00	182
	10.00	628	180	22.00	182
	11.00	628	200	23.00	196
	12.00	558	190	24.00	196
	13.00	670	108	1.00	210
	14.00	728		2.00	182
	15.00	364		3.00	182
	16.00	266		4.00	196
	17.00	196		5.00	210

ze sítě 9 436 kWh
z vl. výroby 1 328 kWh
Celkem za 24 hod. 10 764 kWh

spotřeba 6.00 - 14.00 7 282 kWh, 14.00 - 22.00 1 694 kWh,
22.00 - 6.00 1 783 kWh

	hod.	kWh	hod.	kWh
ČERVEN June				
den prac.	6.00	126	18.00	154
klidu	7.00	140	19.00	126
	8.00	126	20.00	126
weekend	9.00	126	21.00	140
	10.00	154	22.00	140
	11.00	126	23.00	154
	12.00	140	24.00	140
	13.00	140	1.00	126
	14.00	126	2.00	140
	15.00	126	3.00	140
	16.00	126	4.00	140
	17.00	140	5.00	126

Celkem za 24 hod 3 248

Spotřeba 6.00-14.00 1 204 kWh, 14.00-22.00 1 078 kWh,
22.00- 6.00 966 kWh

	hod.	kWh	hod.	kWh
LEDEN January				
den prac.	6.00	168	18.00	154
klidu	7.00	168	19.00	140
	8.00	154	20.00	154
weekend	9.00	154	21.00	168
	10.00	168	22.00	154
	11.00	140	23.00	154
	12.00	154	24.00	168
	13.00	154	1.00	168

14.00	182	2.00	154
15.00	154	3.00	154
16.00	154	4.00	168
17.00	168	5.00	154

Celkem za 24 h 3 808 kWh

spotřeba 6-14.00 1 274 kWh, 14.00-22.00 1 246 kWh,
22.00- 6.00 1 288 kWh

	hod.	kWh	hod.	kWh
ČERVEN June				
prac. den	6.00	364	18.00	154
work day	7.00	672	19.00	168
	8.00	658	20.00	154
	9.00	546	21.00	168
	10.00	644	22.00	168
	11.00	658	23.00	210
	12.00	518	24.00	196
	13.00	686	1.00	182
	14.00	672	2.00	168
	15.00	238	3.00	196
	16.00	196	4.00	196
	17.00	182	5.00	182

Celkem za 24 h 8 176 kWh

Spotřeba 6.00 - 14.00 5 054 kWh, 14.00 - 22.00 1 428 kWh,
22.00 - 6.00 1 694 kWh.

TOFA Albrechtice
státní podnik
468 43 Albrechtice v Jizerských horách
6

S pozdravem

Hübner Petr
energetik podniku

82

SBĚRNÁ FAKTURA ZA ELEKTŘINU číslo: 450469/450469 — Za období: 12/90

Vyhotoveno: 09.01.91 — Splatnost: BEZ SPLATNOSTI, INKAS.PŘIKAZEM

1. Odběrové hodnoty mimo VT (NT: 0100 - 1700 - 2200 DAL)

Ukazatel	Starý - 1. mes.		Nový - 1. mes.		Starý - 2. mes.		Nový - 2. mes.	
	předchozí	současný	předchozí	současný	předchozí	současný	předchozí	současný
Špička	594650	605551	82903	84250				
Den	384372	387705	14665	14750				
Noc		55.0						
Maximum								
Datum odečtu	901130	901229	901133	931229				
Číslo ele.	02666137		1576684					
Násobitel kWh	140/0 R 6/1		140/0 R 6/1					
Násobitel kW	14/0							
Počet dnů výpomoci								

Reactive

Active

2. Ukazatel nominálních hodnot

Ukazatel	kW	kWh - špička	kWh - den	kWh - noc	kVAr
Nominální hodnoty	770		155414	46662	30058
Změny					
Dodržované					
Výsledné hodn.	770		155414	46662	
Ověřen trvale					

3. tgφ = kVAr/kWh 30058/155414 = 0.193 Přirážka %

Výsledné hodnoty

Text		Počet tech. hodn.	Cena Kč	Cena Kč
	SAZBA A4 - VN			
Výkon	kVA/kVA	770	73.00	5621C.60
Výkon za výpomoc	kW			
Stálý plat za výpomoc	kW			
Sjednaný výkon	kW	770	—	—
Překroč. max.	kW		—	—
Činná spotř. - špička	kWh			
- den	kWh	155414	0.37	57503.18
- noc	kWh	46662	0.28	13065.36
Přirážka za jal. energii				
Nájem z měřidel		—	—	14.20
Nájem z transform.		—	—	
Ostatní		—	—	
CENOVÉ ZVÝŠENÍ C 53.403				67209.35
Úhrada za odběr				193993.CC
Plánované účtování				
Celkem				

Adresa odběrného místa:
TOFA ZAVOD C3
468 43 ALBRECHTICE

Adresa odběratele:
TOFA ALBRECHTICE
ST. PODNIK
468 43 ALBRECHTICE

Číslo odběratele: 450469

Bankovní spojení odběratele:
SBCS - pobočka JABLONEC N.N
Číslo účtu: 4800 451

Odběratel:
SEVEROCESKE ENERG. ZAV.
TEPLICKA 8
405 49 DECIN IV

Kód: 008176-12568004
Banka spořitelna a.s. DECIN
Číslo účtu: 19-1LO 451
Rozdělovací zápis
CEZ concern, PRAHA

1. Kopie

SBĚRNÁ FAKTURA ZA ELEKTŘINU číslo: 450469 — Za období: -12/90

Vyhotoveno: 09.01.91 — Splatnost: BEZ SPLATNOSTI, INKAS.PŘIKAZEM

450469 CSL HUD.KAS.Ik. TOFA ALBRECHTICE 202070 193993.CC

2. Ukazatel nominálních hodnot

Ukazatel	kW	kWh - špička	kWh - den	kWh - noc	kVAr
Nominální hodnoty					
Změny					
Dodržované					
Výsledné hodn.					
Ověřen trvale					

3. tgφ = kVAr/kWh = ... Přirážka %

Výsledné hodnoty

Text		Počet tech. hodn.	Cena Kč	Cena Kč
Výkon	kVA/kVA			
Výkon za výpomoc	kW			
Stálý plat za výpomoc	kW			
Sjednaný výkon	kW		—	—
Překroč. max.	kW		—	—
Činná spotř. - špička	kWh			
- den	kWh			
- noc	kWh			
Přirážka za jal. energii				
Nájem z měřidel		—	—	
Nájem z transform.		—	—	
Ostatní		—	—	
Úhrada za odběr				193993.CU
				12460C.CU
UHRADA				95993.CU

Adresát:
TOFA ALBRECHTICE
ST.PODNIK
UCTARNA

468 43 ALBRECHTICE

Adresa odběrného místa:

Adresa odběratele:
TOFA ALBRECHTICE
ST. PODNIK
468 43 ALBRECHTICE

Číslo odběratele: 45.469

Bankovní spojení odběratele:
SBCS - pobočka JABLONEC A.N
Číslo účtu: 4800 451
V 12050469

Odběratel:
SEVEROCESKE ENERG. ZAV.
TEPLICKA 8
405 49 DECIN IV

Kód: 008176-12568004
Banka spořitelna a.s. DECIN
Číslo účtu: 19-1LO 451
PRAHA

1. Kopie

- 93

[redacted]

468 43 ALBRECHTICE V Jiz. horách

Váš dopis:

Vaše značka:

Naše značka: 38/TN/91

Vyřizuje: Ing. Hübner Jiří

Albrechtice v J. h. 24. 1. 1991

Doporučeně
S E V E N
p. Ing. Slavotínek
Slezská 9
120 29 Praha 2

Věc:

Došlo: 28. ledna 1991
Č. j.:
Vyřízeno: 16/91

Vážený pane inženýre,

dle Vašeho doporučení jsme zpracovali stručný popis energetického hospodářství státního podniku Tofa Albrechtice. Jak z popisu vyplývá jsou již podnikány kroky k jeho změně (plynofikace).

Pro realizaci dalších etap však jsou naše informace velice malé a podniky jako ČKD, Sigma, Ocelové konštrukcie Žilina, které jsme jako v úvahu přicházející dodavatele kontaktovali, zatím velký zájem o realizaci nejeví. Uvítáme příležitost, která by nám umožnila alespoň získání představy jaká v našem oboru výroby jsou možná technická řešení vedoucí k energetickým úsporám. V případě Vaší možnosti výpomoci rádi doplníme další informace a zabezpečíme Vaši návštěvu v podniku.

S pozdravem Na další spolupráci se těší

TOFA Albrechtice
státní podnik
468 43 Albrechtice v Jizerských horách
6

Ing. Miroslav Polák
ředitel

TOPA ALBRECHTICE, státní podnik
Albrechtice v Jizerských horách

ENERGETICKÉ HOSPODÁŘSTVÍ

1/91

85

1) Identifikační údaje podniku

Název: TOFA Albrechtice, státní podnik
Adresa: 468 43 Albrechtice v Jizerských horách
Telefon: (0428) 655 41
Dálnopis: 186 448
Fax: (0428) 655 09
IČO: 125 164

Financující banka: Komerční banka Jablonec nad Nisou
číslo účtu 4800 - 451

Ředitel podniku: Ing. Miroslav Polák
Technický náměstek: Ing. Jiří Hübner
Energetik: Petr Hübner

2) <u>Charakteristika výroby</u>

a) počet pracovníků ..... 520 employees

b) hrubý obrat ..... 100 mil Kčs/yr

hrubý zisk ..... 16 mil Kčs/yr profit before Tax

c) odbyt tuzemsko ..... 70 + 15 % (dále viz. text ad d)

export (devizová oblast) ..... 15 % (" ")

d) popis výrobní činnosti:

V podniku se vyrábí dřevěná bižuterie, dřevěné hračky, společenské hry a pianové mechaniky. V technologickém toku jsou obsaženy veškeré výrobní operace, počínaje zpracováním dřevěné kulatiny dopravované do podniku železnicí a konče expedicí hotových balených výrobků. Od vnějších dodavatelů jsou odebírány pouze kovodílky a některé komponenty pro výrobu pianových mechanik a barviva a kartony pro hračky a bižuterii.

Celá výrobě je soustředěna do jednoho uzavřeného areálu. Vně zůstávají pouze doplňkové provozy (jídlena, ubytovna, železniční vlečka, bytové hospodářství).

Odbyt výrobků se uskutečňuje u výroby bižuterie, her a hraček (cca 30 % výroby) za 15 % na tuzemském trhu a z 15 % exportem do zemí s volně směnitelnou měnou. Výroba pianových mechanik (70 % výroby) se odbytuje u s.p. Petrof, kde se výrobky převážně exportují do oblastí s volně směnitelnou měnou.

3) <u>Popis energetických zdrojů</u>

Energetické zdroje a jejich spotřeba jsou pro lepší přehlednost zaznamenány na výkresových přílohách:

A/ stávající stav

B/ možnosti energetických úspor

K tomuto doplňuji komentář:

ad A/ Primárním zdrojem tepelné energie je těžký topný olej (dále TTO), jehož roční spotřeba činí cca 1900 - 2000 t/rok. Doplňkovým zdrojem pro výrobu tepelné energie je spalování dřevěného odpadu z výroby. Teplo se vyrábí ve 2 kotlích.

Spotřeba tepla je znázorněna v grafu, přičemž zásobování TUV bytového fondu a zásobování sušáren vyžadují nepřetržitý provoz kotelních jednotek, přestože se jedná o poměrně malou spotřebu.

Toto energetické hospodářství je ve své nákladovosti dále pro podnik neúnosné, neboť jenom náklady na příslušení TTO při vzrůstu ceny znamenají nárůst nákladů z 3,4 mil. Kčs (1990) na 10,7 mil. Kčs (1991), přičemž ani tato cena nemusí být konečná. Z toho vyplývá koncepce změny energetiky podniku.

ad B/ Změna energetiky podniku je rozvržena na 2 části:

a) změna palivové základny

b) technologická opatření na absolutní snížení spotřeby

ad a) Přechodem topného média TTO na zemní plyn - nedojde k absolutní úspoře tepelné energie, ale k výraznému snížení finanční náročnosti (na 3,0 mil.Kčs při současných cenách) vyplývající z cenových rozdílů na pořízení jednotky výhřevnosti.
Rizikovost tohto spočívá v nezaručených cenách zemního plynu. Investiční náročnost této akce představuje 2,0 mil. Kčs na realizaci plynového přivaděče a regul. stanice a 2,5 mil. Kčs na rekonstrukci kotelny (CÚ 1990). Na realizaci této akce je vybaveno územní rozhodnutí, zpracovává se projekt (5/91) a jsou zajišťovány hlavní dodávky (regulační stanice).

Po zpracování projektu bude uzavřena Hospodářská smlouva s Plynostavem Pardubice a 1. Brněnskou strojírnou na dodávku prací. Realizace proběhne v r. 1992. Zprovoznění pro topné období 1992/93.

ad b) Další akce jsou směřovány na změnu technologie sušení řeziva a změnu v zajišťování kontinuity dodávek tepla, s cílem snížení energetické náročnosti.

Současné parní sušárny jsou nejenom energeticky náročné, ale i technologicky překonané. Probíhá ověřování vhodnosti použití kondenzačních nebo vakuových sušících komor. Kromě nižší spotřeby tepla pro vlastní sušení by bylo možno jim přiřadit teplo-nebo horkovodní akumulátory tepla (a totéž pro bytový fond). Tímto by byla odstraněna nutnost nepřetržitého chodu kotelny i v letním období. V průběhu pracovního dne a týdne by se spalováním dřevního odpadu z výroby přebytek vyráběného tepla akumuloval pro noční zásobování a dále pro zásobování přes sobotu a neděli (sušáren a bytů). Bilance energetikcé výtěžnosti vychází pro toto příznivě. Hlavním přínosem tohoto kroku je úspora mzdových nákladů a spotřeby mazutu (plynu) přes sobotu a neděli, kdy není odpadové dřevo z výroby. Dále dojde k úspoře el. energie při odstávce kotelny (instal. příkon 120 kW). Rozbor tohoto kroku z hlediska úspor je zpracován. Není však zpracována investiční náročnost, která bude značná (sušící komory pouze z dovozu).

Další rezervou je současné zásobování objektů teplem z parního vytápění. Výměníkové stanice a teplovodní rozvody s možností regulace by nejenom umožnily další snížení energetické spotřeby, ale i náhradu současných již opotřebovaných rozvodů s velkou poruchovostí.

Další zdroj rezervy ve spotřebě energie je u vzduchotechniky. Značná část prostor s dřevoobráběcími stroji je vybavena odsáváním, přičemž odsátý teplý vzduch je z cyklonů nevyužíván. Možnosti rekuperace nejsou ověřeny (vzduch s dřevním prachem ?)

Nezpracována je také varianta instalace kotle na spalování výhradně dřevního odpadu (piliny a prach z cyklonů a kusový odpad z nevyužitého řeziva) jež je spalovány na pevném roštu s ručním zakládáním kusového paliva a šnekovým podáváním odpadu z cyk-

lonů. Možné užití kotle na spal. dřev. odpadu s rychlým zápalem (plyn) by snížilo současné prostoje s uváděním současných kotlů do provozního stavu (cca 1 hodina roztápění při spal. dřev. odpadu). Rovněž při užití jednoúčelového kotle lze předpokládat vyšší účinnost. Stavebně jsou prostory pro tento kotel připraveny u současné kotelny.

Mechanika planinová

1 - mechaniková lišta
2 - závěs hlavy
3 - hlava
4 - násadka
5 - kladívko
6 - poduška
7 - kladívková lišta
8 - závěs podušky
9 - vrut závěsu
10 - ložisko
11 - jazýčková poduška
12 - pružina hlavy
13 - poutko hlavy
14 - dusítko
15 - stavěč
16 - stavěcí šroubek
17 - dusítkový drát
18 - pružina dusítka
19 - spodní dusítkový dílek
20 - závěs dusítka
21 - dusítková poduška
22 - dusítková tyč
23 - červík
24 - úhelník
25 - vidlicový šroub
26 - zarážková lišta
27 - zarážkový šroub
28 - zarážka
29 - jazýčková lišta
30 - protichytač
31 - násadka protichytače
32 - tkanice
33 - jazýček
34 - závěs jazýčku *)
35 - pružina jazýčku
36 - spodek
37 - lišička
38 - závěs spodku
39 - zarážka dusítka
40 - chytač
41 - drát chytače
42 - drát tkanice
43 - pilot
44 - páka podušky
45 - konzola mechaniky
46 - lůžkový šroub
47 - šroub konzoly
48 - hlavice
49 - sloupková lišta
50 - sloupek
51 - spojka
52 - závěs spojky
53 - sloupkový šroubek

*) Součást není v obrázku znázorněna; vyskytuje se jen u mechanik starších typů

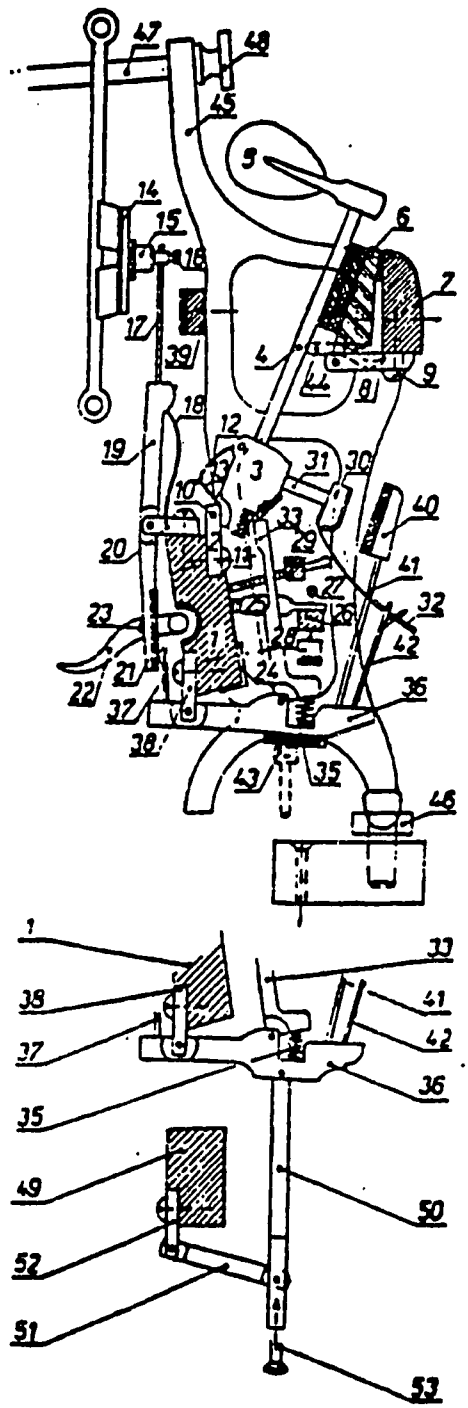

obr. 1

RESOURCE MANAGEMENT ASSOCIATES
of Madison, Inc.

520 University Avenue
Suite 300
Madison, WI 53703 U.S.A.

Telephone: 608/283-2880
Facsimile: 608/283-2881
Telex: 469 453

ENERGOPROJECT

18 APR 91

ATTN: MR. MALEK

FAX: 011-42-2-87-96-58

TEL: 011-42-2-6835024

Re: TOFA
ALBRECHTICE, CZECHOSLOVAKIA

Dear Mr. Malek:

For the TOFA plant, please refer to information on insulation and steam valves attached to our letter of April 15 concerning the Branik brewery. Again, for this plant please make a list of the number of valves required, the steam pressure and flow, and the valve pipe sizes and types. Additional information on the Jordan Valve Mark 86 (2 sheets) is attached.

Water valve information was also include with the Branik brewery letter of April 15th. For the TOFA plant, please make a list of the number, size, flow rate and type of valves required.

Sincerely,

Dave Shipley

Dave Shipley

copy: William C. Dries
RMA Madison

92

APPENDIX I
Photographs

1. The new condensate and steam lines. From left to right: Robert Anderson (RMA), Peter Hubner (TOFA Power Engineer), B. Malek (Energoprojekt) and Jiri Hubner (TOFA Technical Director).

2. Piping insulation. Peter Hubner (left) and William Dries (RMA).

3. Uninstalled heating control valves. From left to right: Robert Anderson, Peter Hubner, and William Dries.

APPENDIX J
List of Abbreviations

AC	= alternating current
amps	= amperes
atm	= atmosphere = 14.696 pounds per square inch
bar	= 100,000 pascals = 14.504 pounds per square inch
BTU	= British thermal unit
cfm	= cubic feet per minute
cm	= centimeter = 0.3937 inches
cm^2	= square centimeter = 0.155 square inches
CO	= carbon monoxide
CO_2	= carbon dioxide
DC	= direct current
°C	= degree Celsius T[°C] = 5/9*(T[°F] - 32
°F	= degree Fahrenheit
°R	= degrees Rankine T[°R] = T[°F] + 460
eff	= efficiency
ex air	= excess air
Gcal	= gigacalorie = 1 billion calories = 3.968 million BTU
GJ	= gigajoules = 1 billion joules
gph	= U.S. gallons per hour
gpm	= U.S. gallons per minute
GWh	= gigawatt hours = 1 billion watt hours
H_2	= hydrogen
H_2O	= water
H_2SO_4	= sulfuric acid
hectare	= 10,000 square meters = 2.471 acres
hectoliter	= 100 liters = 26.42 U.S. gallons
Hg	= mercury
hr	= hour
Hz	= hertz = cycles per second
J	= joules
kcal	= kilocalories = 1 thousand calories = 3.968 BTU
Kcs	= 29.77/$1 US
kg	= kilogram = 2.2046 pounds
Kgcc	= 7,000 Kcal = 27,776 BTU
kJ	= kilojoules = 1 thousand joules = 0.947813 BTU
km	= kilometer = 0.621 miles
kN	= kilonewton = 1 thousand newtons
kPa	= kilo pascals = 1 thousand pascals = 0.14504 pounds per square inch
kV	= kilovolts = 1 thousand volts
kVA	= kilovolt-amperes
kVAr	= kilovars = 1 thousand volt-amperes (reactive)
kW	= kilowatt = 1 thousand watts
kWh	= kilowatt hour = 1 thousand watt hours
lbs	= pounds
liter	= 0.2642 U.S. gallons = 0.03531 cubic feet
m	= meter = 39.37 inches

m^2	= square meter = 10.76 square feet
m^3	= cubic meter = 35.31 cubic feet
ma	= milliampere = 0.001 amperes
MCal	= megacalorie = 1 million calories
metric ton	= 1 thousand kilograms = 1.1023 U.S. tons
mg	= milligrams
min	= minute
MJ	= megajoules
mm	= millimeter = 0.03937 inches
MPa	= 1 million pascals = 145.04 pounds per square inch
MVA	= megavolt-amperes
MW	= megawatt = 1 million watts
MWh	= megawatt hours = 1 million watt hours
NG	= natural gas
nm	= nanometer
Nm^3	= cubic meters at standard conditions of temperature and pressure (20°C and 1 atmosphere)
NO_X	= nitrogen oxide
O_2	= oxygen
P	= pressure
PC	= personal computer
ppm	= parts per million
psi	= pounds per square inch
psig	= pounds per square inch (gauge)
R	= thermal resistance
s	= second
SO_2	= sulfur dioxide
sq ft	= square feet
Tcal	= teracalorie = 1 trillion calories = 3.968 billion BTU
T	= temperature
V	= volts
VArs	= volt-amps (reactive)
VSD	= variable speed drive
yr	= year