PN-ABL-039
76716

ENERGY EFFICIENCY AUDIT REPORT

PRAZSKE PIVOVARY BRANIK
Prague, Czechoslovakia

JANUARY 1992

PREPARED BY: RESOURCE MANAGEMENT ASSOCIATES OF MADISON, INC.
Madison, WI

and

ENERGOPROJEKT
Prague, Czechoslovakia

U.S. EMERGENCY ENERGY PROGRAM FOR EASTERN AND CENTRAL EUROPE

U.S. AGENCY FOR INTERNATIONAL DEVELOPMENT
BUREAU FOR EUROPE
WASHINGTON, D.C. 20523

ENERGY EFFICIENCY AUDIT REPORT

PRAZSKE PIVOVARY BRANIK
Prague, Czechoslovakia

JANUARY 1992

PREPARED BY: **RESOURCE MANAGEMENT ASSOCIATES OF MADISON, INC.**
520 University Avenue
Suite 300
Madison, WI 53703
(608) 283-2880

and

ENERGOPROJEKT
EGP 22000
Bubenska 1
170 05 Praha 7
Czechoslovakia
42-2-6835024

U.S. EMERGENCY ENERGY PROGRAM FOR EASTERN AND CENTRAL EUROPE

U.S. AGENCY FOR INTERNATIONAL DEVELOPMENT
BUREAU FOR EUROPE
OFFICE OF DEVELOPMENT RESOURCES
ENERGY & INFRASTRUCTURE DIVISION
WASHINGTON, D.C. 20523

USAID Contract EUR-0015-C-1006-00

Table of Contents

i. Executive Summary 1

ii. Description of Energy Efficiency Program 4

1.0 Plant Description 5

2.0 Plant Energy Profile 7

3.0 Audit Description 15

4.0 Summary of Results 16
- 4.1 Short-Term Recommended Projects 16
- 4.2 Long-Term Recommendations 18

5.0 Plant Management/Organization 19

6.0 Implementation Evaluation 20

List of Tables

Table 1. Summary of Energy Savings 2
Table 2. Production Records 1990 6
Table 3. Fuel and Electric Costs 1990 7
Table 4. Combustion Analysis Boiler No. Three 18

List of Figures

Figure 1. Graph Supplements to Table Three 8
Figure 2. Steam System Diagram 9
Figure 3. Refrigeration System Diagram 12
Figure 4. Compressed Air System Diagram 13
Figure 5. Electrical System Diagram 14

List of Appendices

Appendix A
Calculations for Uncontrolled Building Heating

Appendix B
Calculations for Steam Leaks & Vents

Appendix C
Calculations for Uninsulated Piping

Appendix D
Calculations for Boiler Blowdown Energy Recovery

Appendix E
Miscellaneous Data

Appendix F
Specifications and Details of Pipe Insulation and Building Heating Control Valves

Appendix G
Photographs

Appendix H
List of Abbreviations

i. Executive Summary

The countries of Eastern Europe face unprecedented changes in both their political and economic systems. To aid in the transition to market economies, the U.S. Agency for International Development (USAID) designed the Eastern Europe Emergency Energy Program. Resource Management Associates of Madison, Inc. (RMA) is the technical assistance contractor for the Industrial Energy Efficiency Component (IEEC) of the program in Czechoslovakia. RMA was provided valuable assistance by two in-country subcontractors: 1) Stredisko pro Efektivni Vyuzivani Energie (SEVEn), in plant selection and in-country logistics; and 2) Energoprojekt in the audit and equipment installation work.

Czechoslovakia faces severe energy problems including uncertain oil supplies, pollution from coal, and questions about the future of nuclear energy. The Czechoslovakian industrial sector has experienced large increases in energy prices, the latest in January, 1991. At the same time, the country embarked upon a fundamental economic structural reform. The US Agency for International Development established the IEEC to help mitigate the impacts of increased energy costs on the industrial sector by providing technical support through energy audits and economic support through purchase and installation of energy conservation equipment in selected representative industrial plants.

As part of this program, an energy audit was conducted at the Prazske Pivovary Branik (brewery) in Prague Czechoslovakia. Because of continued high product demand, this industry is considered very viable. Czechoslovakia's 97 breweries, make replicability of the audit results and recommendations high. Branik also produces a vitamin supplement, Pangamin.

Energy Audit

The Branik plant was audited on March 11-15, 1991. The steam system, refrigeration system, and space heating systems were examined to determine low/no-cost opportunities for energy saving improvements. Audit results showed four areas of immediate improvement which could reduce the plant's fuel oil consumption by 7.4 percent, as shown in *Table 1*.

Table 1. Summary of Energy Savings

Description	Energy Lost GJ/year	Fuel Savings metric tons oil/year	Fuel Savings Kcs/year
Steam Leaks	667.8	25.5	120,204
Uncontrolled Building Heating	2719.0	103.9	490,000
Uninsulated Piping	2986.6	79.9	376,308
Boiler Blowdown Heat Recovery	1128.4	34.8	163,700
Total	7501.8	244.1	1,150,212

Notes:

Total energy lost represents 7.7 percent of the steam production for 1990 (97,829 GJ).

Total fuel savings represents 7.4 percent of the fuel consumption for 1990 (3,186.5 metric tons).

Fuel cost for heavy oil: 108 Kcs/GJ.

Fuel savings (Kcs/year) would be less with natural gas (100 Kcs/GJ).

During the energy audit, the team identified the following energy conservation opportunities.

1. Steam leaks can be reduced by eliminating uncontrolled process steam vents, repairing holes in pipes and sealing leaking flanges reduces steam leaks.

2. The addition of temperature regulating control valves to the heat radiators can eliminate uncontrolled building heat.

3. Hot pipe insulation can reduce heat loss.

4. A boiler blowdown heat recovery system would save energy.

Other opportunities exist for energy conservation, but these four areas could be implemented quickly and exhibit relatively short payback periods.

Construction of a new brew house and planned renovations at Branik limited the energy audit. A new brewhouse, new boiler, new boiler burners and new boiler water conditioning system will significantly alter the plants' energy profit. Also, the primary fuel for the boilers will change from heavy oil to natural gas.

The audit emphasis was placed on existing systems which would not be significantly affected by these construction activities. The four energy saving improvements could be implemented immediately.

Branik's management showed enthusiasm and support during the energy audit visit which attested to their interest in energy conservation.

Implementation Phase

Two followup visits were made to the plant during the implementation phase of the program (July 22 to August 15). The auditors inspected the boiler house and the compressor building to monitor installation of the equipment. Section 6.0 describes the status of the equipment installation at the time of the followup visit. The work has since been completed, and the owner is monitoring the energy savings.

ii. Description of Energy Efficiency Program

Czechoslovakia's industrial sector is well developed and contains many large and heavy industries. However, there are many medium size industries within the country that consume a large percentage of the industrial energy used. Many of these industries are made up of multiple companies and plants within the country, making them ideal targets for industrial energy audit work because of high potential replication. Many of these medium-size plants are quite viable, but have not yet implemented energy conservation activities.

Increases in energy prices to equivalent world prices have put additional pressures on industrial firms to conserve energy. Changes within the economic system (increasing energy prices, privatization, etc.) will necessitate increased energy efficiency and reduced energy intensity of production. The Industrial Energy Efficiency Program will train Czech managers and engineers in energy efficiency measures and practices, as well as in energy management. This training will demonstrate the benefits of energy conservation and illustrate the advantages of making all employees aware of energy waste.

The Industrial Energy Efficiency Program is based on four distinct tasks:

1. Industrial plant screening
2. Industrial plant energy audit
3. Policy analysis
4. Implementation.

Fifteen industrial plants were screened and eight were selected to be audited. Criteria used in this selection included:

- opportunity for energy savings (with a focus on oil savings)
- potential replicability of energy saving options in similar plants or systems
- future viability of the plant in the changing economy
- size of the plant
- other activities such as joint ventures or other bi-lateral aid projects.

The energy audit activity, described in detail in this report, determined the overall energy efficiency of the plant, which was used to identify no/low-cost equipment opportunities with short-term payback. An assessment was made of the technical and management capabilities and capital investment decision-making processes regarding energy conservation applications. Preparation of equipment specifications and other documents required for procurement of U.S. equipment or materials completed the audit.

In the implementation phase, equipment specified in the energy audit was procured, cleared through customs, and delivered to the plant. Also, requirements for installation of the material were identified. Where possible, this was done by plant personnel, or alternatively, by CSFR contractors. Following installation, the effectiveness of the energy conservation application was evaluated.

1.0 Plant Description

Prazske Pivovary Branik is located at Udolni 1/212, 147 00 Praha 4, Prague, Czechoslovakia. The brewery brews approximately five types of beer and employs 180 people. Branik has been producing beer since 1893 and is currently part of a three brewery business group. Branik has also produced Pangamin, a vitamin B-12 product processed from brewer's yeast, since 1989.

Branik's management changed in 1990. Plant operations are directed by:

Mr. Josep Dolansky, Director
Mr. Vaclav Smejkal, Technical Director
Mr. Joseph Ruzek, Power Engineer
Mr. Jan Kos, Brewmaster

The plant phone numbers are (422) 46 18 41 and fax (422) 46 07 31.

Nine major buildings compose the brewery: the malt house, brewhouse/compressor building, power house, new brewhouse, bottling/barreling building, Pangamin production, residence/garage building, storage building, and office building. The brewing process and power plant are undergoing a major renovation. After construction of the new brewhouse, the existing brewhouse will no longer be used. The power house renovation includes one new boiler, planned new burners for two existing boilers, and a new boiler water conditioning system. Construction will be completed in approximately six months.

The beer brewing process description is as follows: Malt grain is sprouted in the malt house in large tanks under controlled temperature and moisture conditions. After proper maturing, the malt is dried in an indirect steam heated dryer. The malt is combined with water and hops and cooked in the brewhouse to break down the complex carbohydrates into simple sugars. The solution is filtered, combined with yeast (and sometimes sugar) and fermented. (The filtered malt grain is used as an agricultural cattle food supplement).

Initial fermentation takes place in open vats under controlled temperatures. Late in the fermentation process, the beer solution is transferred to storage tanks for proper aging at controlled temperature and pressure. The beer is then filtered and packaged in bottles or kegs. Approximately 30 percent of the beer produced is pasteurized. The filtering process produces a byproduct which is dewatered, spray dried, and sold as Pangamin, a dietary vitamin supplement rich in B-12.

Production of beer and vitamin is shown in *Table 2*. Beer production and demand tend to be greatest in the summer months. The plant produces at its maximum capability, and immediately delivers the product to its customers, eliminating the need for warehousing. The new brewhouse addition will add an additional 33 percent production capacity.

Since demand for Pangamin has dropped, vitamin production has decreased. Branik produced approximately 5 metric tons of Pangamin in the first quarter of 1991. Branik is working with several research groups to improve the product and market it's health benefits. Branik is currently the only plant in Czechoslovakia marketing this type of supplement. In the past, Branik has purchased filtered beer solids from other breweries to produce Pangamin. Vitamin production was virtually nil at the time of the energy audit. The brewery currently operates 24 hours per day and 6 days per week.

Table 2. Production Records 1990

Month	BEER (hectoliters)*	VITAMIN (kilograms)
January	20710	12916.8
February	18086	11207.88
March	20741	8366.4
April	23396	4924.8
May	27597	7041.6
June	23379	5889.6
July	24064	2594.1
August	26828	12740.4
September	19226	6874.4
October	23651	5553.9
November	20847	0
December	18109	0
Total	266634	78109.8

*26.42 gallons in a hectoliter

2.0 Plant Energy Profile

Heavy oil and electricity are used for the production of beer and Pangamin. According to plant estimates, 14-20 percent of the total production cost is energy cost. Production records indicate that energy consumption per unit product has declined from 1989 to 1990, although the root cause for the decline is unclear.

Table 3 contains the annual fuel and electrical profile for 1990 (Also see *Figure 1 Graph Supplements to Table Three*). The fuel oil consumption does fluctuate widely throughout the year, with a peak in January of 325 metric tons and a low in August of 150 metric tons. Oil fuel prices jumped from 2,800 Kcs/metric ton to 4,710 Kcs/metric ton in October. Fuel prices, fuel availability during the winter, and sulfur dioxide emission reduction are the primary reasons Branik plans to switch to natural gas as their primary fuel. Electrical consumption remained steady throughout 1990.

Table 3. Fuel and Electric Costs 1990

Month	FUEL OIL Ton	FUEL COST, Kcs	ELECTRIC kWh	ELECTRIC COST, Kcs
JANUARY	325.0	910000	273478	133092
FEBRUARY	304.0	851200	234643	119742
MARCH	283.0	792400	233310	119717
APRIL	273.0	764400	294136	141069
MAY	283.0	792400	268224	133988
JUNE	252.0	705600	254364	129173
JULY	211.0	590800	228703	120518
AUGUST	150.0	420000	224247	119701
SEPTEMBER	267.5	749000	286572	140534
OCTOBER	298.9	1407819	254205	126943
NOVEMBER	286.2	1348002	246642	123202
DECEMBER	252.4	1188804	245995	187165
TOTAL	3186.0	10520425	3044519	1594844

Branik produces steam utilizing three 4 metric ton/hr boilers and burning heavy oil (see Steam System Diagram, *Figure 2*). The boiler feedwater system consists of a sand filter, ion exchange water softeners, and deaerator. The boilers were originally installed in 1970 and produced 97,829 GJ of steam heat in 1990. Branik estimates 20% is used for building heating and the remainder for plant processes. Also, 70% of the steam condensate is

Figure 1. Graph Supplements to Table Three

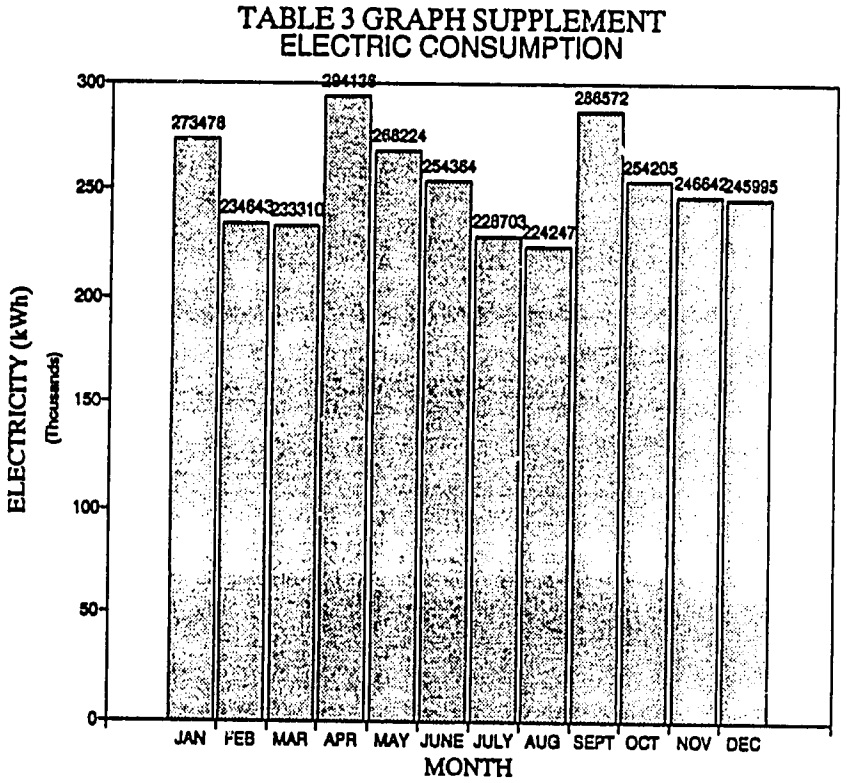

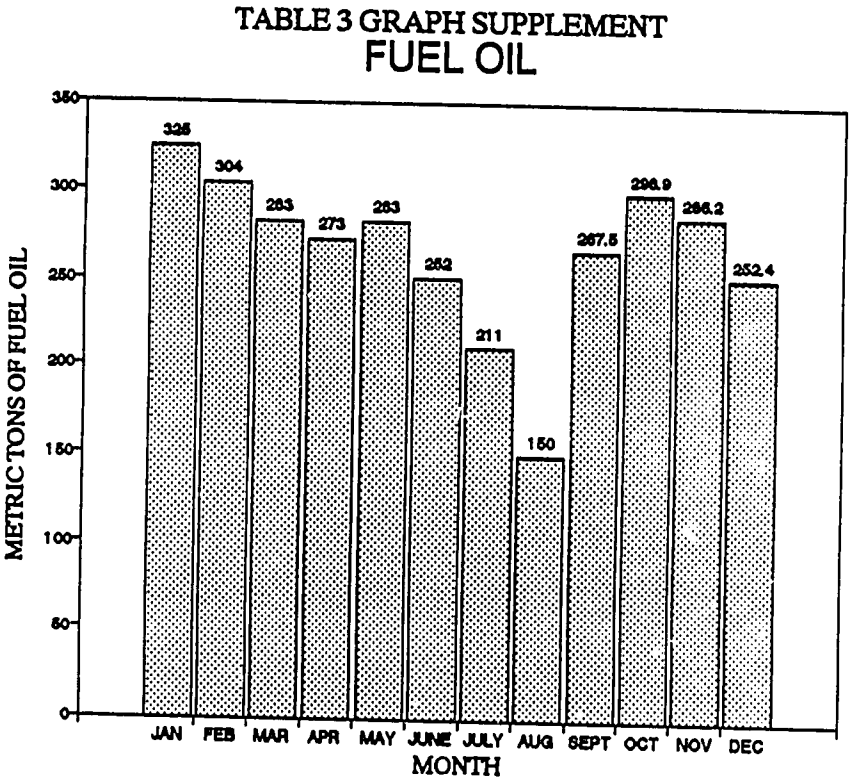

Figure 2. Steam System Diagram

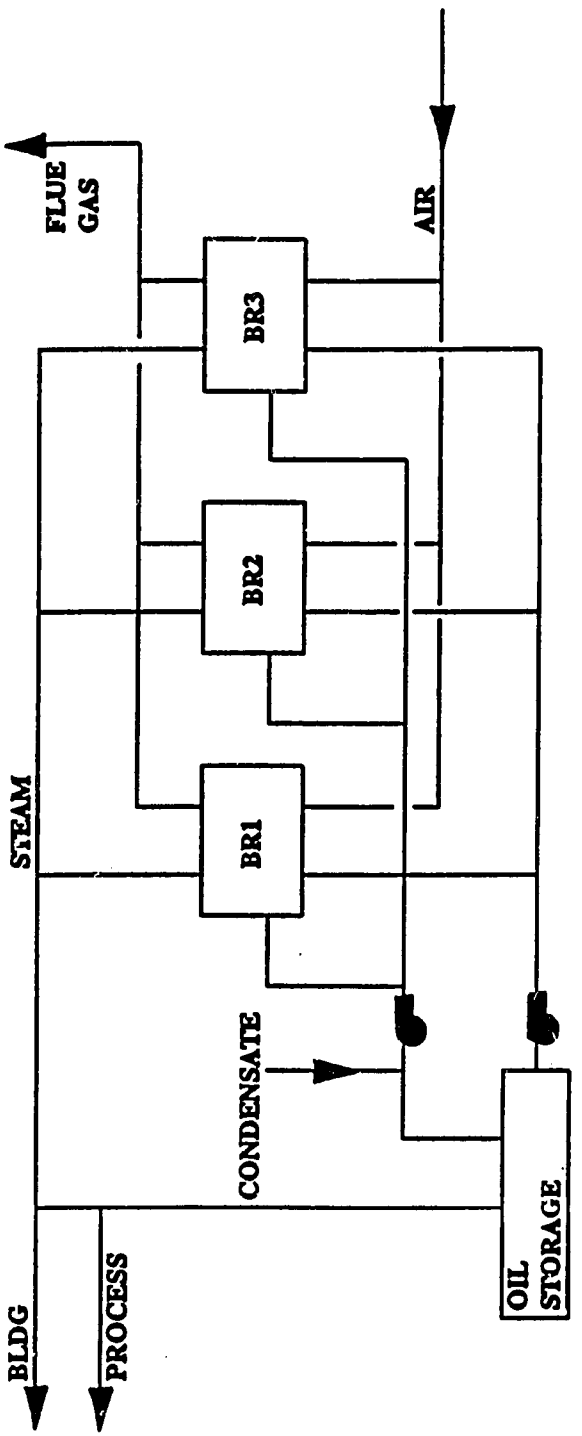

returned to the boilers from the plant distribution heating system. The audit team was unable to verify the condensate flow but suspects this figure is high. The steam (at approximately 1.3 Mpa) is utilized for heavy oil heating, space heating, malt drying, brew kettle heating, domestic hot water, beer pasteurization, beer bottle washing, beer barrel washing, and Pangamin production. A portion of the steam condensate is used for space heating the administrative building.

The plant refrigeration system is shown in *Figure 3*. The system consists of four ammonia compressors, two condensers, cooling towers, and cold water circulation for process and space cooling. Cooling water is circulated to the compressors from the cooling tower located on the roof. During the summer, two compressors are required to carry the cooling demand; in the winter only one is required. The cooling system produced 11,435 GJ of cooling for 1990. A brine water at -10 °C is circulated to cool the beer after the pasteurization process. Cold water at 1 °C is circulated to provide cooling in the beer cellars and for the beer process. The cellars contain approximately 200 tanks for storage/aging and 20 open tanks for fermentation and areas for process work. Cold water and cold brine solution are stored in separate insulated supply tanks, approximately 2.5 meters tall, 3 meters wide, and 5.5 meters long.

Three electrically driven air compressors, shown in *Figure 4*, produce process compressed air. Typically, one compressor can manage the entire plant's air demand, which was 2,486,000 cubic meters for 1990. Cooling water is circulated to the compressors from the cooling towers on the roof.

Electric power is provided by the utility at 22,000 volts and stepped down to 400 volts with a single power transformer (see *Figure 5*). There are also two back-up transformers. The power supply system is equipped with a power factor correction system. On average, the plant has been able to maintain a 0.95 or greater power factor. Electric consumption was 3,044,514 kWh for 1990.

The brewery uses water from its own wells to produce beer, and town water for plant processes; 136,000 cubic meters and 182,000 cubic meters each respectively for 1990. The cost for town water was 3.7 Kcs per cubic meter.

The new brewhouse, currently under construction, is expected to be completed in August 1991. According to the designers, it is expected to decrease the unit product energy cost by as much as 40 percent, and increase plant production capacity by 33 percent.

The power house will be completely overhauled. A 6 metric ton/hr boiler will replace one of the existing boilers. The two remaining boilers will receive retrofit burners. Natural gas will be utilized as the primary fuel and the boiler water conditioning system will be replaced. The plant is switching to natural gas to avoid potential fuel oil shortages during the winter months and to reduce pollutant emissions. Also, pricing is slightly more favorable for natural gas (100 Kcs/GJ) than heavy oil (108 Kcs/GJ).

These two major plant projects were planned by the previous plant managers and implemented by the current plant managers. The plant energy profile will change considerably upon completion of these projects. The audit team investigation focused on generic plant areas and systems unaffected by the plant reconstruction in order to pursue implementable and measurable energy improvements.

Figure 3. Refrigeration System Diagram

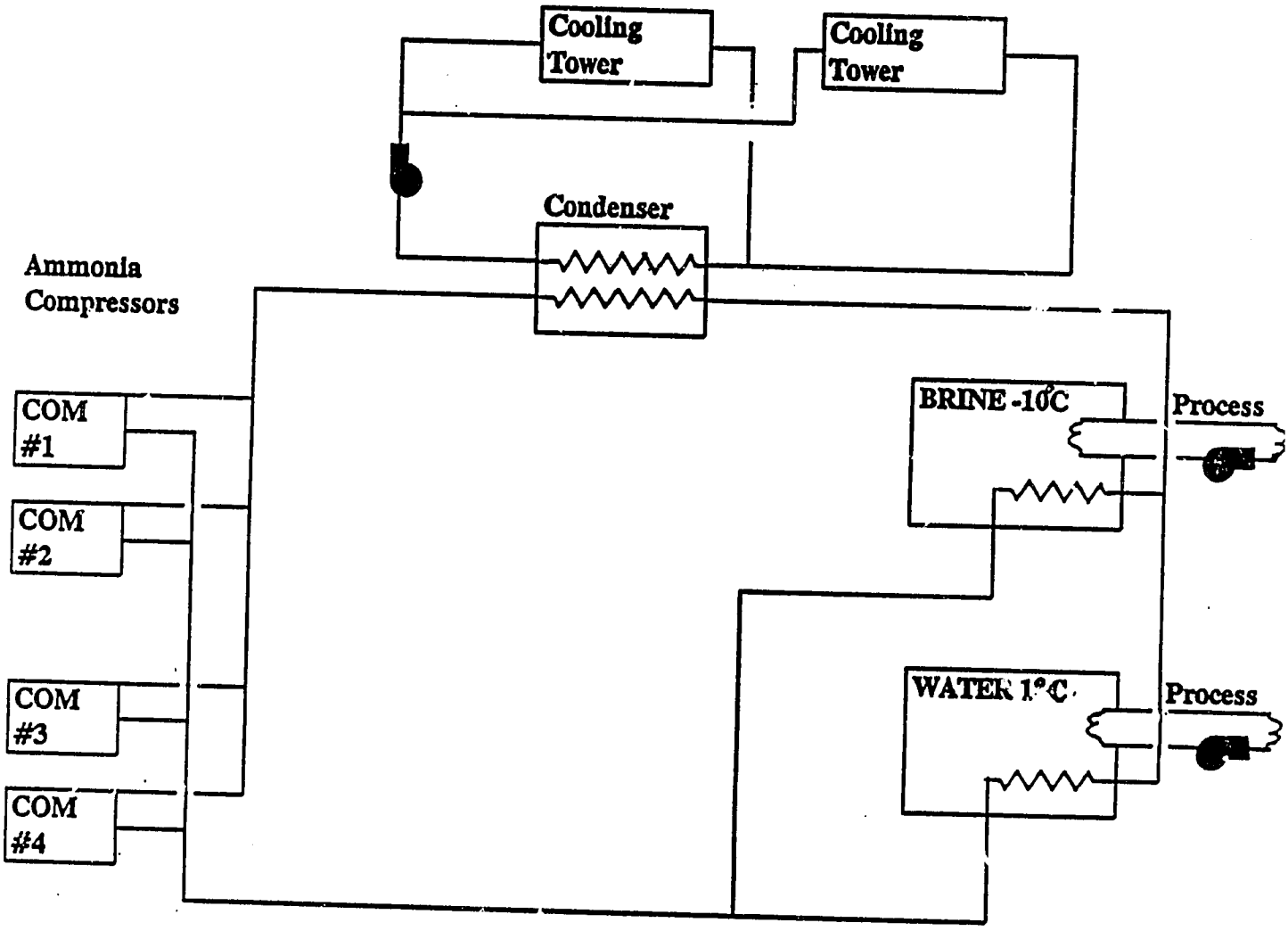

Figure 4. Compressed Air System Diagram

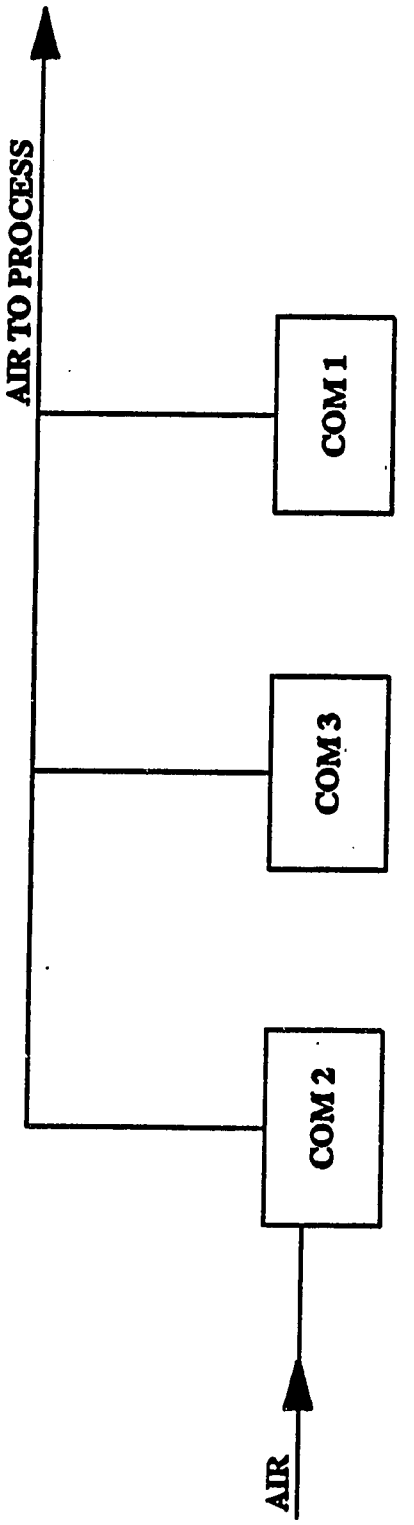

Figure 5. Electrical System Diagram

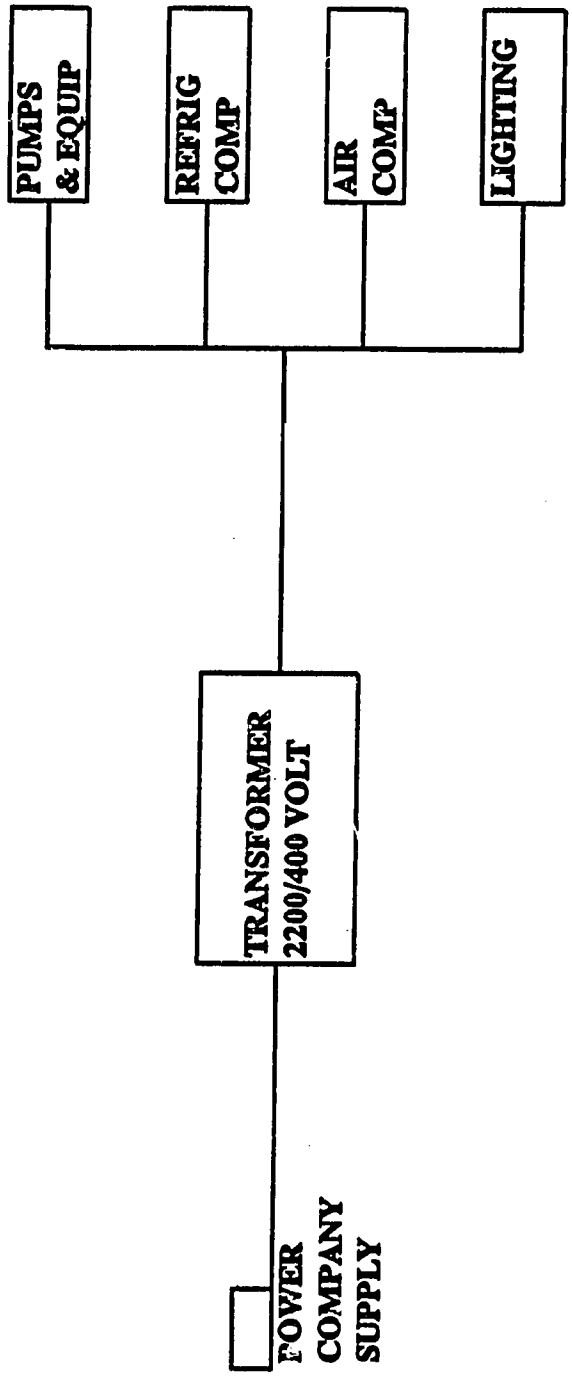

3.0 Audit Description

The audit began with a meeting at the brewery on March 11, 1991 attended by Mr. Dolansky, Mr. Semjkal, Mr. Ruzek, Mr. Rak, Mr. Dries, Mr. Pavelic, Mr. Foell, Mr. Erickson and Mrs. Yvonna Hlinoual (interpreter). Discussion of the purpose of the audit continued until noon. After lunch, the plant was toured to determine the general layout and arrangement of the facilities and to obtain an understanding of the operations. This tour, which continued on Tuesday, facilitated a selection of specific areas of the plant to be audited in detail. These specific areas of interest included: steam leaks, piping insulation, uncontrolled building heating, boiler combustion efficiency tests, flow measurements in the boiler house and temperature and flow measurements in the ammonia and air compressor room.

Steam leaks, lack of pipe insulation, areas of uncontrolled space heating, and combustion efficiency were evaluated as follows.

1. Portions of the compressor room and boiler house were audited for missing and damaged pipe insulation. Each measurement location was marked and given a numeric identification number. The pipe surface temperature was measured with an infrared digital non-contact pyrometer and pipe dimensions recorded. The two-person audit team was assisted by Mrs. Hlinoual and Mr. Rak.

2. Uncontrolled space heating was observed in the Pangamin production building and the size of the equipment was determined from the name plate data on the equipment. In other areas, uncontrolled heating was observed but not recorded due to the limited time available.

3. Combustion efficiency tests and oil flow tests were run on the boilers to demonstrate the use of the measuring instruments. The combustion tests were conducted simultaneously with another combustion analyzer owned by one of the energy agencies of the national government. A comparison of the results verified performance of the agencies' instrument.

During the audit on Wednesday and Thursday, Mr. Smejkal and Mr. Ruzek were available for a portion of each day to answer the auditor's questions and provide assistance as requested. A part of Thursday and Friday morning were spent at the office of SEVEn preparing the data and recommendations.

On Friday, the audit team presented their preliminary recommendations including an explanation of the funds available to implement some of the recommendations, to Mr. Dolansky, Mr. Smejkal, Mr. Ruzek, Mr. Rak, Mr. Stichauer (Director of the research institute located at the brewery), Mr. Jan Kos (Brewmaster) and Mrs. Hlinoual.

4.0 Summary of Results

The energy audit identified several short-term and long-term energy conservation opportunities. The short-term projects are characterized by low/no implementation cost, short payback periods, and an implementation time of two months or less. Long-term projects are characterized by higher implementation costs and longer payback periods. Often, long-term projects involve major construction and could require six to twelve months to implement.

4.1 Short-Term Recommended Projects

Four short-term energy conservation opportunities were identified.

1. Uncontrolled Building Heating: Building inspection at the brewery showed space heating was by steam or hot water and manual control of the radiation by hand valves, resulting in over-heating of many spaces. Approximately 10 percent of the energy supplied for space heating is wasted.

   A list of buildings and spaces is provided in Appendix A. A program of control installation should be implemented on the newer buildings and on the older buildings which will remain in service for more than three years. Total oil savings is estimated to be 103.9 metric tons per year. The cost of the fuel saved will amount to roughly 490,000 Kcs. Installation cost of temperature control valves is estimated to be 95,233 Kcs (US $3,198.95). Payback will be less than 3 months. A sample calculation of lost heat due to the existing manually controlled system is included in Appendix A.

2. Steam Leaks and Uncontrolled Steam Vents: Based on their estimated size, steam leaks were identified during the audit as a major source of steam loss accounting for part of the 30 percent of the steam not returned as condensate to the boilers. Steam is not injected directly into the processes or used in a process and not returned to the boiler. In a system with good maintenance, no more than 2 to 5 percent of steam loss is due to blowdown and minor leaks. The total waste of steam is estimated at 668 gigajoules per year at a cost of 120,204 Kcs. A list of leaks and sample calculations are shown in Appendix B.

   The actual number of steam leaks is probably twice as great as the number found during the audit. The short duration of the audit prevented us from finding all the leaks. In addition, several areas were physically too confining to inspect.

3. Uninsulated Piping: Although the majority of the plant piping is adequately insulated, a number of uninsulated pipes containing hot steam or condensate were observed. Using pipe surface temperature measurement and pipe surface area measurement, the heat loss was estimated to be 2986.6 GJ per year (see Appendix C). The audit team estimates that only 50 percent of the total plant uninsulated pipe was measured and included in this calculation. Piping such as steam distribution to

space heaters, condensate return and steam control valves should all be insulated to retain the fluid's specific heat. Re-installation of insulation after piping repairs should be part of maintenance activities. Heat loss from steam distribution space heating lines can overheat rooms. When this occurs, plant personnel open windows to provide cooling, creating an additional source for heat loss. Insulation is a simple, low cost task which would save 79.9 metric tons of fuel oil per year. Payback for this project would be excellent; less than 5 months with an estimated material and labor cost of 154,369 Kcs.

Boiler Blowdown Energy Recovery: The existing boilers are manually blown down twice per day to control total dissolved solids content in the boiler water. This water contains a significant amount of energy which could be recovered to preheat the boiler feedwater. The power house reconstruction project does not include a boiler blowdown energy recovery system for any of the boilers. The estimated energy lost for a single 4 metric ton/hr boiler is 1128.4 GJ per year (see Appendix D) or in fuel oil equivalents, 34.8 metric tons per year savings. Payback for this project for one system would be very good; approximately 9 months with an equipment and labor cost of 165,000 Kcs (US $5560).

Two other short-term projects which could be further investigated by plant personnel are: 1) replace/repair the small amount of cooling piping insulation near the brine tank, and 2) repair the compressed air system leaks. A recent test (by others) of the system indicated up to 20% system air loss.

As part of the inspection and training aspect of this project, Boiler No. 3 combustion was analyzed using an Enerac 2000 combustion analyzer and the burner firing rate was confirmed by measuring fuel oil input using a Controlotron Spectra Fourier Flowmeter. The results are shown in *Table 4*.

Table 4. Combustion Analysis Boiler No. Three

Parameter	Sample Point #1	Sample Point #2	Sample Point #3
Ambient Temperature (°C)	29.5	29.0	35.5
Flue Temperature (°C)	494.5	295.0	234.5
Net Flue Temperature (°C)	465	266	199
Oxygen Concentration (%)	7.8	9.4	12.1
CO_2 Concentration (%)	10.5	9.2	7.1
CO Concentration (mg/m^3)	16	14	11
Combustible Gases (%)	0.18	0.18	0.21
Smoke Spot (Bacharach number 0-9)	3-4	3-4	NA
Excess Combustion Air (%)	56	79	130
Combustion Efficiency (%)	59	72	71
Static Pressure (mm H_2O)	-8	-13	-25
Nitrogen Oxides (mg/m^3)	248	204	159
Sulfur Dioxide (mg/m^3)	2270	1396	1602
Fuel Consumption (liter/hr)	NA	NA	217.58
Fuel Consumption (GJ/hr)	NA	NA	9.11

Notes:
Sample Point #1 located in the middle of boiler first pass tube bundle.
Sample Point #2 located in the middle of boiler second pass tube bundle.
Sample Point #3 located in the flue exhaust fan inlet duct.

4.2 Long-Term Recommendations

Several long-term energy conservation measures were identified.

The combustion analysis indicated that the low technology burners are achieving a reasonable combustion efficiency of 70 percent. Planned new burners should be able to obtain 80 percent combustion efficiency resulting in a direct fuel savings of 8 percent. A measured smoke spot of 3 - 4 Bacharach scale indicates that the boiler fireside heat exchanger surface is fouled with soot. A layer of soot, 0.5 millimeter thick (0.02 inches), will result in a 5 percent loss in boiler efficiency.

At the time of boiler house renovation, the existing boilers should be cleaned thoroughly on the fireside to eliminate soot. After cleaning, stack exhaust temperatures should be reexamined and the application of an additional economizer to the boiler outlet investigated.

Two additional long-term projects that should be investigated by plant personnel are; 1) replace incandescent lighting with high efficiency lighting, and 2) reduce space heating loads by reducing air infiltration through window/door maintenance and/or replacement.

5.0 Plant Management/Organization

The brewery has undergone changes in top management in 1990 and has many projects under way to modify the plant. They do recognize the need to improve energy efficiency. The new boilers and brewhouse will increase the efficiency of the brewery.

The management should consider implementing a plan to carry out both short-term and long-term energy conservation. This plan should include training of people in the plant to recognize the importance of energy savings as a way to enhance the economic viability of the brewery. A formal plan with identifiable people responsible for training and implementing an energy conservation program needs to be implemented.

6.0 Implementation Evaluation

A visit was made to the site on 22 July 1991. Mr. Malik, Mr. Dries, Mr. Erickson, Mr. Anderson and Mr. Ruzek inspected the boiler house and compressor building. The equipment to installed was held up in customs and the approval from the customs office was expected the next week. The installation of the boiler blowdown heat recovery unit was discussed with Mr. Skorepa who will supervise the installation. The firm CDK Dukla was installing the new dual fuel boiler as well as the boiler blowdown unit. The installation of the heat recovery unit was discussed with Mr. Skorpa at Dukla. Mr. Ruzek was told of the need to complete the installation of the boiler blowdown unit, temperature control valves and insulation by the 9th of August. He will advise management of the audit team's concern.

The insulation contractor had his equipment on site and was scheduled to start work on 24 July 1991.

Pipe Insulation

A final visit was made on 9 August 1991 by Mr. Dries, Mr. Erickson, Mr. Kos, Mr. Ruzek and Mr. Smejkal. The pipe insulation project was 75% complete. The work was inspected and the installation is satisfactory. The owner will send a letter of completion when the work is done. The letter will include the invoice for the work. Picture number 1 was taken of the work (see Appendix G).

Boiler Heat Recovery Blowdown Unit

The blowdown unit was inspected, it is on the site and will be installed by 15 September 1991. Picture number 2 shows the unit (see Appendix G).

Automatic Control Valves for Heating

The box of valves was inspected. The owner will have the valves installed by 15 September by a private contractor. The owner will send a letter of completion when all the work had been completed.

Evaluation of Energy Conservation Measures

The owner will make an estimate of the energy saved after the system has been operating for six months to a year. This estimate will be adjusted for weather, a new gas burner in one boiler, new brewhouse, other changes in process energy use and increased production. The accuracy of the estimate will also be included. The evaluation of the energy saved by the energy conservation measures is quite difficult to make as the individual energy uses by the processes and building heating are not easily metered.

APPENDIX A
Calculations for Uncontrolled Building Heating

Table A1. Buildings and Spaces

Building Number and Use		Building Area Square Meters
1	Malt (Sladaovna)	22,750
2	Office Building(Administrative Budova)	1,152
3	Office, Brewhouse, Compressors Residence 2 & 3rd stories (Varny, Strojorna, Chalazeni)	3,771
4	Boiler House (Kotelna)	650
5A	Office Research Institute, Cellars Aging (Sklepy, Spilky)	2,459
5B	Bottling (Stacirna Lahvi)	1,826
5C	Barreling (Stacirna Sudu)	1,122
6A	Pangamin Office & Packaging	625
6B	Pangamin Production	324
7	Storage & Residences (Hospodarska Budova)	1,020
	Total	35,699

Note: Building numbers are as shown on the site plan.

Sample Calculation for Uncontrolled Building Heating

Building 6B has four steam unit heaters rated at:
Airflow 5300 cubic meters per hour, .55 kW motors, 1 Mpa steam pressure.
The total heat output is 3136 cfm x 1.1 x 50 x 4 heaters =
689,920 BTU/hr. (0.729 GJ/hr.)

The estimated heat loss for the building is 150,000 BTU/hr.

Wasted heat is 539,000 BTU/hr (.57 GJ) at a cost of 78 Kcs/hr. Assuming the heaters are operating 35% of the time each year the heat wasted will be:

3066 nrs x 0.57 giga joules

= 1747 GJ per year at a cost of 78 x 1747 = 136,314 Kcs.

The heaters run all the time.They are also used to heat outside air when the spray dryer is operated. The dryer is operated less than 6 days a month. This building is an extreme case of uncontrolled heating.

Areas in other buildings are used to determine total savings based on assumed a heat loss of 1.7 GJ\m^2\yr. At a 10% saving this will save 0.10 x 1.7 x 180 Kcs/GJ = 30.6 Kcs/m^2. Total = 30.6 x 11,605 = 355,113 Kcs.

Total of building 6B and buildings 2 through 7 = 136,314 + 355,113 = 491,427, rounded to 490,000 Kcs

Savings:	Building 6B:		1747 GJ/yr
	Buildings 2 through 7:	0.17 x 11,605 =	1972 GJ/yr
		Total	2719 GJ/yr

Total Kcs 180 x 2719 = 489,420 Kcs/yr

See Appendix F for control valve specifications.

APPENDIX B
Calculations for Steam Leaks and Vents

Table B1
Steam Leaks and Uncontrolled Vents

Building Number	Quantity	Size dia. mm	Pressure Mpa
1	1, leak	0.4	0.95
5B,5C	3, leaks	1.6	0.95
3	1, leak	0.4	0.95
3	1, leak	0.8	0.95
4	1, leak	1.6	0.95
4	1, leak	0.4	0.95
4	1, leak	1.6	0.95
4	2, vents	22.0	0.80

The leak/vent size and steam pressure determines the quantity of steam escaping. A 1.6 mm diameter opening at 0.95 Mpa exhausts 389.6 metric tons steam per year (667.8 GJ/yr energy lost). In terms of heavy oil, 25.5 metric tons/yr or 120,204 Kcs/yr (based on a nominal steam system efficiency of 60% and heavy oil price of 108 Kcs/GJ). Total energy loss was calculated based on a total of nine leaks with a mean diameter of 1.6 millimeter.

APPENDIX C
Calculations for Uninsulated Piping

Pipe heat loss due to radiation and convection was calculated with the following heat transfer coefficient equations:

$$Hr = 0.172*E*((Ts/100)^4-(Ta/100)^4)/(Ts-Ta)$$

$$Hc = 1.016*(1/D)^{0.2}*(2/(Ts+Ta))^{0.181}*(Ts-Ta)^{0.266}$$

$$Q = (Hr + Hc)*(Ts - Ta)$$

where:

Hr = radiant heat transfer coefficient (BTU/hr ft^2 °F)
Hc = convection heat transfer coefficient (BTU/hr ft^2 °F)
E = emissivity of the surface (0.8 for rusty metal pipe)
Ts = temperature of the outside pipe wall (°Rankine)
Ta = temperature of the ambient surrounding air (°Rankine)
Ta = 11.5 °C for the compressor building (513 °R)
Ta = 23.9 °C for the power house (535 °R)
D = outside diameter of the pipe (inches)
Q = rate of heat transfer of the surface (BTU/hr ft^2)

Conversion factor; Joules/hr m^2 = 11357 * BTU/hr ft^2
°R = (°C * 9/5) + 32 + 460
meter = 0.0254 * inches

The total pipe heat loss is then calculated with the measured dimensions of the pipe.

Heat loss = Q * 3.14 * D * (pipe length)

The total pipe heat saved is calculated based on the effectiveness of 2" of insulation (0.7) and the nominal boiler fuel to steam efficiency (0.60).

Heat saved = Heat loss * 0.7 * 24 hr/day * 312 days/yr

Fuel saved = (Heat saved / 0.60) / 43.6 GJ/metric ton

Fuel saved (Kcs) = Fuel saved * 108 Kcs/GJ

See Appendix F for insulation specifications.

TABLE C1

PRAZSKE PIVOVARY BRANIK, PRAGUE, CZECHOSLOVAKIA
PIPING HEAT LOSSES ESTIMATE
COMPRESSOR BUILDING AND POWER HOUSE

LOCAT	SURFA TEMP. DEGRE	PIPE DIAME mMETE	PIPE LENGH METER	TRANS. COEFF. MJ/HR°	ENERG LOSS MJ/HR	HEAT ENERG LOSS GJ/YR	ENERG SAVIN Kcs/YR	EMISS IVITY	PIPE INSULATION AMBIENT TEMP. DEGRE	TA deg	TS deg F	RADIA Btu/ L ft	CONVECTION Btu/ DIA. in.	brft2deg	h.rt2deg	DIA*LENGTH
1B	170	40	9.1	9.43	10.78	80.72	10170.7	0.8	11.7	53	338	30	1.574803	1.623494	1.290142	364
2B	108	60	6.1	4.47	5.14	38.49	4849.7	0.8	11.7	53	226.4	20	2.362205	1.211893	1.059281	366
2B	170	25	13.7	9.84	10.58	79.22	9981.7	0.8	11.7	53	338	45	0.984252	1.623494	1.417299	342.5
3B	110	90	3	4.43	3.76	28.15	3546.9	0.8	11.7	53	230	10	3.543307	1.223733	0.981592	270
4B	88	80	3	3.19	2.4	17.97	2264.2	0.8	11.7	53	190.4	10	3.149606	1.098478	0.945228	240
5B	110	80	33.7	4.48	37.93	284.02	35786.5	0.8	11.7	53	230	111	3.149606	1.223733	1.00469	2696
VALVE	110	160	1.2	4.22	2.54	19.02	2396.5	0.8	11.7	53	230	4	6.299213	1.223733	0.874805	192
6B	107	80	50.2	4.29	54.1	405.1	51042.6	0.8	11.7	53	224.6	165	3.149606	1.206008	0.997553	4016
6B	107	80	42.6	4.29	45.91	343.77	43315	0.8	11.7	53	224.6	140	3.149606	1.206008	0.997553	3408
6B	107	80	7.6	4.29	8.19	61.33	7727.6	0.8	11.7	53	224.6	25	3.149606	1.206008	0.997553	608
7B	228	90	9.1	14.48	37.24	278.85	35135.1	0.8	11.7	53	442.4	30	3.543307	2.098518	1.175532	819
8B	150	80	12.2	7.27	22.28	166.83	21020.6	0.8	11.7	53	302	40	3.149606	1.480386	1.088982	976
9B	124	80	6.1	5.39	8.26	61.85	7793.1	0.8	11.7	53	255.2	20	3.149606	1.309212	1.037311	488
10B	180	40	6.1	10.35	7.93	59.38	7481.9	0.8	11.7	53	356	20	1.574803	1.690912	1.308099	244
10B	120	50	27.4	5.35	23.01	172.3	21709.8	0.8	11.7	53	248	90	1.968504	1.284321	1.129813	1370
VALVE	240	150	0.6	14.77	4.17	31.22	3933.7	0.8	23.9	75	464	2	5.905512	2.288648	1.055264	90
VALVE	240	180	0.6	14.61	4.95	37.07	4670.8	0.8	23.9	75	464	2	7.086614	2.288648	1.017478	108
VALVE	240	360	0.9	14.02	14.26	106.78	13454.3	0.8	23.9	75	464	3	14.17323	2.288648	0.885766	324
VALVE	240	460	0.9	13.84	17.99	134.71	16973.5	0.8	23.9	75	464	3	18.11024	2.288648	0.843389	414
5P	110	44	20.1	4.18	11.61	86.94	10954.4	0.8	23.9	75	230	66	1.732283	1.284975	1.089763	884.4
6P	250	90	1.5	16.48	6.99	52.34	6594.8	0.8	23.9	75	482	5	3.543307	2.385146	1.180301	135
7P	130	150	1.2	5.01	2.83	21.19	2669.9	0.8	23.9	75	266	4	5.905512	1.411188	0.896714	180
VALVE	130	200	1.2	4.9	3.69	27.63	3481.4	0.8	23.9	75	266	4	7.874016	1.411188	0.846577	240
8P	130	50	60.8	5.48	52.31	391.7	49354.2	0.8	23.9	75	266	200	1.968504	1.411188	1.117065	3040
TOTAL	NA	NA	318.9	NA	398.85	2986.58	376308.9	NA	NA	NA	NA	NA	NA	NA	NA	21814.9
AVERA	NA	68.4	NA	NA	NA	NA	NA	NA	NA	NA	NA	NA	NA	NA	NA	NA

PAYBACK CAL N; INSULATION COST (MATERIALS AND LABOR) = 154369 Kcs
ESTIMATED SAVINGS PER YEAR = 376309 Kcs/yr

PAYBACK = (154396/376309)*12months/yr = 4.9 months

LOCAT "B" DENOTES LOCATED IN THE BASEMENT OF THE COMPRESSOR BLDG.
"P" DENOTES LOCATED IN THE EXISTING POWERHOUSE

NOTES: SURFACE TEMPERATURES IN EXCESS OF 120 DEG. C INDICATE A STEAM PIPE WHEREAS LESS THAN 120 DEG. C INDICATE A CONDENSATE RETURN LINE.
"VALVE" FOLLOWED BY A NUMBER INDICATES A UNINSULATED VALVE(S).

APPENDIX D
Calculations for Boiler Blowdown Energy Recovery

Design Conditions:

A.	Boiler Steam Capacity:	4 metric ton/hr
B.	Boiler Steam Temperature:	250 °C
C.	Condensate Return:	70 %
D.	Boiler Efficiency:	70 %
E.	Boiler Make-up Water Total dissolved solids:	500 ppm
F.	Boiler Water Maximum Total dissolved solids:	3000 ppm
G.	Annual hours of operation:	7488 hr/yr

Design Calculations:

A.	Concentration Factor	= 3000 ppm/500 ppm = 6.0
B.	Net Make-up Water	= 4 metric ton/hr*(1-0.7)*1000/60
		= 20 l/min.
C.	Maximum Blowdown	= 20 l/min./(6.0-1) = 4 l/min.
D.	Gross Make-up	= Net Make-up + Maximum Blowdown
		= 20 + 4 = 24 l/min.

Equipment Design Data (from vendor):

A.	Maximum Blowdown Capacity:	15.1 l/min.
B.	Maximum Gross Make-up Capacity:	181.7 l/min.
C.	Make-up Pressure drop at Gross Max.:	13.8 Kpa
D.	Efficiency at Max. Blowdown Rate:	94 %

Cost/Payback Calculations:

A.	Blowdown System Cost (from vendor): 150,336 Kcs	
B.	Heat saved = Efficiency * Blowdown Rate * Heat Capacity * Temp. Difference	
		= 0.94*(4*(1-0.7)/5)*(4.186 MJ/metric ton)*(250-100)
		= 141.7 MJ/hr
C.	Heat saved (per year)	= 147.7 * 24 * 312 / 1000
		= 1060.7 GJ/yr
D.	Fuel saved	= (1060.7/0.70)/(43.6 GJ/metric ton) = 34.8 metric ton/yr
E.	Fuel savings	= 34.8 * 4710 Kcs/metric ton = 163,700 Kcs/yr
F.	Payback	= 12 months/yr * 150336 / 163700 = 11.0 months

Continuous Blowdown Heat Recovery Systems are available from Czechoslovakian manufacturers. Attached are catalogue cut sheets for two American manufacturers for this type of equipment. Continuous Blowdown Heat Recovery System to be Sentry Equipment Corporation, Pennsylvania Separator Corporation, or equal design and manufacture.

Design Features:

1. Automatic proportioning control valve - to regulate blowdown flow proportional to the make-up water flowrate.
2. Heat exchanger constructed from stainless steel tubing.
3. Flash/tank separator - optional.
4. Normal Operating Pressure: 150 psig
5. see "Calculations for Blowdown Energy Recovery"

Clean boilers are essential for profitable and safe operations

- Continuous Surface Blowdown is the most effective way to remove destructive solids from the boiler — by removing dissolved & suspended solids where concentration is greatest & most damaging.
- However this protective action also results in a costly heat loss — therefore, the cost-effective Blowdown System must recover this heat normally lost during surface blowdown.
- To recover blowdown heat, the system must take the proper amount of blowdown flow only at the same time as makeup flows.

Problems with Dirty Boilers

Boilers get dirty as the solids in the makeup water concentrate in the boiler. Concentrated solids cause high maintenance & failures as the result of:

- **Scale Formation** - reduces heat transfer; causes tube burns.
- **Carryover** - causes dirty steam which damages turbines, traps, product, etc.
- **Corrosion** - of boiler & piping.
- **Embrittlement** - causes metal failure.

Keep Your Boiler Clean By ...

- **Chemically Treating Boiler Water** - Untreated makeup water can produce scale in the boiler and auxiliary equipment. Chemical treatment alone is not enough. Chemicals increase boiler solids.
- **Blowing Down The Boiler** - To eliminate solids at the same rate as they are added. **Periodic Bottom Blow Is Not Sufficient - Or Efficient.** Concentration is never reduced enough. And there is no practical way to save the blowdown heat loss.

Sentry XC Blowdown Systems:
• Optimize Energy Savings
• Improve Control Of Dissolved Solids
• Provide A Long, Trouble Free Life

For over 60 years, Sentry's XC Systems have been paying off for their buyers and proving that they are the best of all continuous blowdown systems because they .....

- Typically recover 90% of the blowdown energy loss.
- Typically pay for themselves in six months.
- Provide solids control — by adjusting to changing makeup patterns.
- Give long life with minimal maintenance.

This comparative BD System Analysis demonstrates that the XC System consistently outperforms all competitive systems — and will pay off for you.

	BD Energy Recovered	Payback Months	Solids Control	Boiler Life
• XC System	[illegible]	[illegible]	Good	[illegible]
• Flash Tank/Heat Exchanger	[illegible]	[illegible]	Fair	[illegible]
• Conductivity/Heat Exchanger	[illegible]	[illegible]	Very Good	Poor (4)(5)

XC Energy Savings Facts

Based on boilers operating at:
150 psig; boiler solids controlled at
2000 ppm TDS; 60°F makeup water;
80 hours per week; fuel @ 40¢/Therm

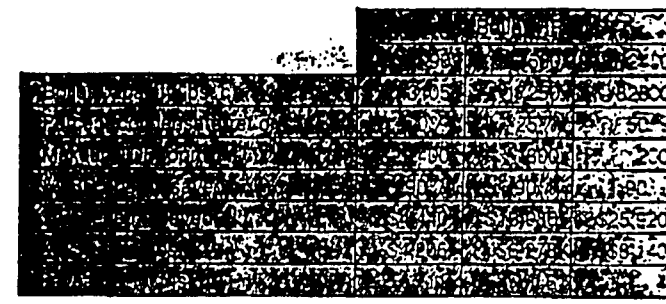

XC'S unique features include MAXIMUM HEAT RECOVERY WHILE CONTROLLING SOLIDS WITH A RELIABLE MECHANICAL VALVE.

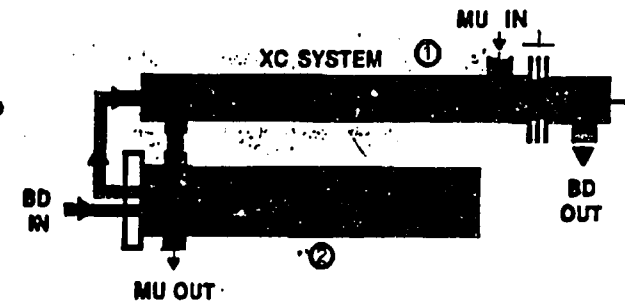

①

Sentry's Automatic Proportional Control Valve Makes the Difference.

The control automatically regulates BD to be concurrent with, and proportional to Makeup (no Blowdown can occur without proportional Makeup flow). This is the explanation for the XC's 90% Blowdown energy recovery. BD energy is always transferred to the MU flow — automatically and proportionally.

Control Valve is mechanical — self-powered — one moving part — easily adjustable.

Requires minimal maintenance. Servicing is fast and simple, using ordinary boiler room tools.

② **Heat Exhanger is counterflow for maximum efficiency.** ASME Code Stamped — Specifically designed for severe BD service (thermal shock, abrasive materials, high velocities, water hammer.) Removable bundle has **stainless steel tubes — extra heavy U-bends** — anti-vibration clamps — and tube support baffles.

XC's give LONG, TROUBLE FREE EQUIPMENT LIFE

The XC is specifically designed to eliminate the twin hazards of blowdown systems:

- FLASH STEAM — which destroys heat exchangers, valves and piping. The XC's Proportional Valve (downstream from exchanger) is in the **cooled blowdown line** — so there is no flashing.
- OVERHEATED MAKEUP — which scales up exchanger, and liberates dissolved gases which corrode the exchanger, piping and deaerator inlet. The XC's Control Valve always proportions makeup to blowdown — and stops overheating of makeup.

STOP WASTING ENERGY. CALL THE SENTRY REPRESENTATIVE FOR THE XC SYSTEM TO SAVE YOU

XC is packaged for easy installation — available for boilers of all sizes (request Bulletins 3.1.2; 3.1.3; 3.1.4 for certified detailed dimensions).

ROUGHING-IN DIMENSIONS

Model No.	[illegible]
X43C	[illegible]
X46C	[illegible]
X66C	[illegible]
X69C	[illegible]
X89C	[illegible]

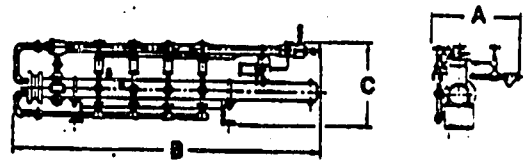

X22C — has an Automatic Proportioning Control Valve and heat exchanger integrated into a single unit for smaller blowdown flows (request File 3.1.6 for additional data, dimensions).

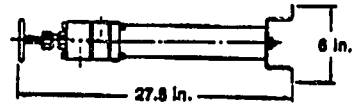

SENTRY

Experienced Manufacturers of Power Plant Specialties for over 60 years. Certified fabricators of ASME B&PV Industrial and Nuclear vessels, valves and pumps. We can suppy you with the design know-how, complete systems or components you need.

Flashtank/Heat Exchanger - Packaged Continuous Blowdown Heat Recovery System (Bulletin 3.2.1).

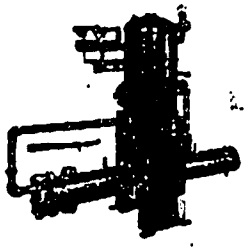

Totalizing Vortex Meters - To measure hot, dirty fluids. A necessity for Blowdown water.

Sample Cooler - Mini Heat Exchangers for Intermittent or Continuous Sampling of Water, Steam, Chemicals.
To 5000 psig
To 1000° F
To 3.5 Sq. Ft.

Single Line Sample Panels — All conditioning components needed to [illegible]

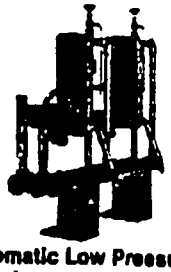

Automatic Low Pressure Blowdown — Heat recovery system for 15 psig boilers. Regulates the blowdown flow to be concurrent with the makeup flow and recover the [illegible]

Surface Blowdown Valve — Provides precise flow control of boiler blowdown or other process fluids. Micrometer dial and [illegible]

APPENDIX E
Miscellaneous Data

APPENDIX E. MISC. DATA

ENERAC MODEL 2000-Combustion Test Record

FOR: USAID

TIME: 10:08:55
DATE: 03/13/91

FUEL: #6 OIL 18660 BTU/LB

COMBUSTION EFFICIENCY:	70.9 %
AMBIENT TEMPERATURE:	35 C
STACK TEMPERATURE:	235 C
OXYGEN:	12.2 %
CARBON MONOXIDE:	1[illegible] MGM
CARBON DIOXIDE:	07.0 %
COMBUSTIBLE GASES:	0.19 %
STACK DRAFT (INCHES H2O):	-01.0
EXCESS AIR:	132 %
OXIDES OF NITROGEN	157 MGM
SULFUR DIOXIDE:	1526 MGM
CARBON MONOXIDE ALARM:	20 PPM

MODE:MGM OXY_REF=TRUE%

ENERAC MODEL 2000-Combustion Test Record

FOR: USAID

TIME: 10:17:44
DATE: 03/13/91

FUEL: #6 OIL 18660 BTU/LB

COMBUSTION EFFIENCY:	71.1 %
AMBIENT TEMPERATURE:	36 C
STACK TEMPERATURE:	234 C
OXYGEN:	12.0 %
CARBON MONOXIDE:	11 MGM
CARBON DIOXIDE:	07.1 %
COMBUSTIBLE GASES:	0.22 %
STACK DRAFT (INCHES H2O):	-01.0
EXCESS AIR:	127 %
OXIDES OF NITROGEN:	161 MGM
SULFUR DIOXIDE:	1677 MGM
CARBON MONOXIDE ALARM:	20 PPM

MODE:OXY_REF=TRUE%

Appendix E. Misc. Data

ENERAC MODEL 2000-Combustion Test Record

For: USAID

TIME: 11:02:40
DATE: 03/13/91

FUEL #6 OIL: 18660 BTU/LB

COMBUSTION EFFICIENCY:	74.0 %
AMBIENT TEMPERATURE:	29 C
STACK TEMPERATURE:	277 C
OXYGEN:	09.6%
CARBON MONOXIDE:	14 MGM
CARBON DIOXIDE:	09.0%
COMBUSTIBLE GASES:	0.18%
STACK DRAFT (INCHES H2O):	-00.5
EXCESS AIR:	85 %
OXIDES OF NITROGEN:	192 MGM
SULFUR DIOXIDE:	1200 MGM
CARBON MONOXIDE ALARM:	20 PPM

MODE: MGM OXY_REF=TRUE%

ENERAC MODEL 2000-Combustion Test Record

For: USAID

TIME: 11:18:06
DATE: 03/13/91

FUEL: #6 OIL 18660 BTU/LB

COMBUSTION EFFIENCY:	70.1 %
AMBIENT TEMPERATURE:	29 C
STACK TEMPERATURE:	313 C
OXYGEN:	09.1 %
CARBON MONOXIDE:	14 MGM
STACK DRAFT (INCHES H2O):	-00.5
COMBUSTIBLE GASES:	0.17%
CARBON DIOXIDE:	09.4%
EXCESS AIR:	72%
OXIDES of NITROGEN:	216 MGM
SULFUR DIOXIDE:	1511 MGM
CARBON MONOXIDE ALARM:	20 PPM

MODE: MGM OXY_REF=TRUE%

APPENDIX E. MISC DATA

ENERAC MODEL 2000-Combustion Test Record

For: USAID

TIME: 10:42:03
DATE: 03/13/91

FUEL: #6 OIL 18660 BTU/LB

COMBUSTION EFFICIENCY:	59.3 %
AMBIENT TEMPERATURE:	30 C
STACK TEMPERATURE:	496 C
OXYGEN:	07.7 %
CARBON MONOXIDE:	14 MGM
CARBON DIOXIDE:	10.6 %
COMBUSTIBLE GASES:	0.18 %
STACK DRAFT (INCHES H2O):	-00.3
EXCESS AIR:	55 %
OXIDES OF NITROGEN:	247 MGM
SULFUR DIOXIDE:	2336 MGM
CARBON MONOXIDE ALARM:	20 PPM

MODE: MGM OXY_REF=TRUE%

ENERAC MODEL 2000-Combustion Test Record

FOR: USAID

TIME: 10:51:28
DATE: 03/13/91

FUEL: #6 OIL 18660 BTU/LB

COMBUSTION EFFICIENCY:	59.1 %
AMBIENT TEMPERATURE:	29 C
STACK TEMPERATURE:	493 C
OXYGEN:	07.8 %
CARBON MONOXIDE:	17 MGM
CARBON DIOXIDE:	10.4 %
COMBUSTIBLE GASES:	0.18 %
STACK DRAFT (INCHES H2O):	-00.3
EXCESS AIR:	57 %
OXIDES OF NITROGEN:	248 MGM
SULFUR DIOXIDE:	2203 MGM
CARBON MONOXIDE ALARM:	20 PPM

MODE: MGM OXY_REF=TRUE%

Electric Consumption Quarterly Report

ODBEROVÝ DIAGRAM

Část c). Hospodářské smlouvy na dodávku elektřiny

DOKLAD 1 2

Platnost diagramu ve čtvrtletí 4 roku 90

ODBĚRATEL: pivovar ZRANÍK

Evid. č.

Technický maximum kW

Čtvrtletní množství el. práce 867000 kWh

Měsíc	Počet dnů Prac.	Počet dnů So+Ne	Celkový odběr el. práce kWh I. směna	II. směna	III. směna	Celkem za dnů	Sp/Ne
10	~~23~~ 23	8	5552	3806	2000	11652	2 1400
11	22	8	6042	3900	2200	12142	2 1500
12	19	12	6760	3200	3200	13160	2 1500

Pásma energetických špiček

			6	10	17	20					
od	6	do 11	a od	16	do	20	hod.				
od	6	do 11	a od	16	do	20	hod.				
od	6	do 11	a od	16	do	20	hod.				

Měsíc	Měsíční množství el. práce kWh	½hod. výkon kW max.	Průměrný hod. výkon kW I. směna	II. směna	III. směna	Výkon. úprava typu	pozbývá platnosti při RS č.
10	2400000	769	732	717	270		
11	2800000	799	761	488	275		
12	3070000	882	845	650	405		

RS 15 I. sm.	366 kW	RS .. kW	násobitel hodnot	Další ujednání může být uvedeno na druhé straně tohoto listu.
II. sm.	366 kW	RS .. kW		
III. sm.	244 kW	RS .. kW	Pozn.:	
so	244 kW	kW		
ne	244 kW	kW		
RS 16	360 kW	RS .. kW		

měsíc

Mimostátně platné snížení spotřeby v době

od	do	a od	do	hod.
od	do	a od	do	hod.
od	do	a od	do	hod.

Sjednáno dne: 2/4

Razítko a podpis odběratele: PRAŽSKÉ PIVOVARY státní podnik ZÁVOD 01 47.00 PRAHA 4, 118/1 15 mechanik a zaměstnik

Razítko a podpis dodavatele: PRAŽSKÉ ENERGETICKÉ ZÁVODY ÚSTŘEDNÍ ODDĚLENÍ ŘÍZENÍ ODBĚRU

Příloh: 2 ~~2 ~~ 10 9

17/12/

883

-39'

Branik Production Data--Year End Total

Podklady pro rozbor hospodaření závodu Braník na úseku energetika v porovnání roků 1989 a 1990

Ukazatel:	výkony v roce : 1989	1990
Výstav piva v Hl (beer) :	244 304	271 342
Výroba sladu v t (malt) :	4 065,3	4 693,6
Pangamin v kg (vitamin) :	135 623	78 109,9
Spotřeba MAZUTu v t (M6 oil) :	3 206	3 186,5
Měrná spotřeba tepla v Gj/Hl:	0,346	0,336
Spotřeba elektr.energie v KWh:	3 068 688	3 044 513,8
Spotřeba vody - město v m^3 (city water) :	144 866	182 484
Spotřeba vody - studna v m^3: (well water)	185 292	136 098
Výroba vzduchu v m^3 (air) :	2 445 600	2 486 400
Výroba chladu v Gj (cold) :	9 944	11 435
Výroba páry v Gj (steam) :	99 340	97 829
Měrná spotřeba el.energie v KWh/Hl	12,56	11,22

-40

(1) #6 Oil (Mazut) --1990

	Quantity & Price (Spotreba & Cena)	
Jan.	325 ton	
Feb.	304 ton	
Mar.	283 ton	
Apr.	273 ton	2,800 kcs/ton
May	283 ton	
June	252 ton	
July	211 ton	
Aug.	150 ton	
Sept.	267.5 ton	
Oct.	248.9 ton	
Nov.	286.227 ton	4,710 kcs/ton
Dec.	252.409 ton	
Total:	3,186.036 ton	

(2) Town Water (Voda)--1990

	Quantity & Price (Spotreba & Cena)	
Jan.	12,500 m3	
Feb.	12,500 m3	
Mar.	12,500 m3	
Apr.	12,500 m3	
May	12,500 m3	
June	12,960 m3	3.7 kcs/m3
July	12,500 m3	
Aug.	12,500 m3	
Sept.	12,500 m3	
Oct.	33,464 m3	
Nov.	14,180 m3	
Dec.	15,418 m3	
Total:	182,489 m3 =	683994 kcs

(3) Electric Consumption-1990

Jan.	273478 KWH
Feb.	234643 KWH
Mar.	233310 KWH
Apr.	294136 KWH
May	268224 KWH
June	254364 KWH
July	228703 KWH
Aug.	224241 KWH
Sept.	286572 KWH
Oct.	254205 KWH
Nov.	246642 KWH
Dec.	245995 KWH
Total:	3044513 KWH

(4) Production-1990

	Beer (Pivo)	Malt (Slad)	Vitamin (Pangamin)
Jan.	20710 hl	480 ton	12916.8 kg
Feb.	18086 hl	420 ton	11207.8 kg
Mar.	20741 hl	480 ton	8366.4 kg
Apr.	23396 hl	464.7 ton	4924.8 kg
May	27597 hl	479.4 ton	7041.6 kg
June	23379 hl	406.4 ton	5889.6 kg
July	24064 hl	117.1 ton	2594.07 kg
Aug.	26828 hl	0	12740.4 kg
Sept.	19226 hl	412.8 ton	6874.4 kg
Oct.	23651 hl	507 ton	5554.9 kg
Nov.	20847 hl	393.5 ton	0
Dec.	18109 hl	534.2 ton	0
Total:	266634 hl	4693.1 ton	78109.8 kg

HL

(6) Well Water		(7) Production Cooling		(8) Production Compressed Air	
Jan.	2130 m3	Jan.	630 Gj	Jan.	246400 m3
Feb.	2160 m3	Feb.	766 Gj	Feb.	199200 m3
Mar.	1672 m3	Mar.	943 Gj	Mar.	222800 m3
Apr.	1911 m3	Apr.	939 Gj	Apr.	223400 m3
May	2100 m3	May	1017 Gj	May	246000 m3
June	2260 m3	June	1072 Gj	June	198400 m3
July	1980 m3	July	1057.5 Gj	July	187600 m3
Aug.	1950 m3	Aug.	1399.5 Gj	Aug.	206800 m3
Sept.	2100 m3	Sept.	1187 Gj	Sept.	199200 m3
Oct.	2604 m3	Oct.	1030 Gj	Oct.	204400 m3
Nov.	2199 m3	Nov.	772.5 Gj	Nov.	194400 m3
Dec.	2091 m3	Dec.	644.8 Gj	Dec.	152800 m3
Total:	25157 m3	Total:	11435 Gj	Total:	2486400 m3

APPENDIX F
Specifications and Details of Pipe Insulation and Building Heating Control Valves

RESOURCE MANAGEMENT ASSOCIATES
of Madison, Inc.

520 University Avenue
Suite 300
Madison, WI 53703 U.S.A

Telephone: 608/283-2880
Facsimile: 608/283-2881
Telex: 469 453

ENERGOPROJECT

15 APR 91

ATTN: MR. MALEK

FAX: 011-42-2-87-96-58

TEL: 011-42-2-6835024

Re: PRAZSKE PIVOVARY
BRANIK, CZECHOSLOVAKIA

Dear Mr. Malek:

Enclosed are pages 76, 77, 82, 83, 86, 87, 122, 123, 178 & 179, showing details of pipe insulation installation. The insulation specifications and thickness are shown on SH-1 & SH-2. The above information will apply to all projects.

The valves to control the steam radiators and unit heaters are shown on the subsequent pages. Please make a list of the number of valves required, the steam pressure and flow, and the valve pipe sizes and types.

The catalog sheets for bulletin No. 501 pages 1, 2, 3 and catalog No. 1500 pages 150-7, 150-14, 150-15, 150-18, 150-20, 150-21 show the type of valve that can be used.

Water valves are shown on four sheets from Erie Control Co. & Honeywell Braukmann. Please make a list of the number, size, flow rate and type.

Sincerely,

Bill Dries /JB

William C. Dries

copy: Dave Shipley
RMA Madison

PLATE NO. 11

FITTINGS, ETC.
Mitered Insulation Elbow Oversized Application

Mitered insulation elbows may be fabricated in the field or pre-fabricated using an adhesive to seal the miters together to form two halves of the elbow. Any of the pipe covering materials may be used to fabricate miters including flexible elastomeric insulation. The term "oversized" indicates any application that must be made large enough to compensate for protrusions at the connection between the pipe and fitting. Applications shown are appropriate for hot and moderate installations.

(A) Finishing or insulating cement covered with fabric.

(B) Pre-formed metal elbow cover, secured with screws — hot application.

Materials: Mitered segments of pipe covering, wires, bands or adhesives, insulating cement, canvas, pre-molded metal elbow cover, sheet metal screws.

1. Pipe.
2. Pipe insulation (shown in (A) with factory applied non-metal jacketing, (B) metal jacketing.) Jacketing extends under the fitting insulation and finish.
3. Mitered segments of pipe covering cut to form a tight fit. (Adhesive between miters on pre-fabricated applications or when required).
4. Glass fiber fill insulation (Optional — used as a means of support when the mitered elbow has not been pre-fabricated into two self-supporting halves.)
5. Wire or banding (unnecessary when pre-fabricated).
6. Pre-formed metal elbow cover secured with sheet metal screws.
7. Finishing cement applied to smooth surface.
8. Fabric applied with adhesive on the surface of finishing or insulating cement.

5/79

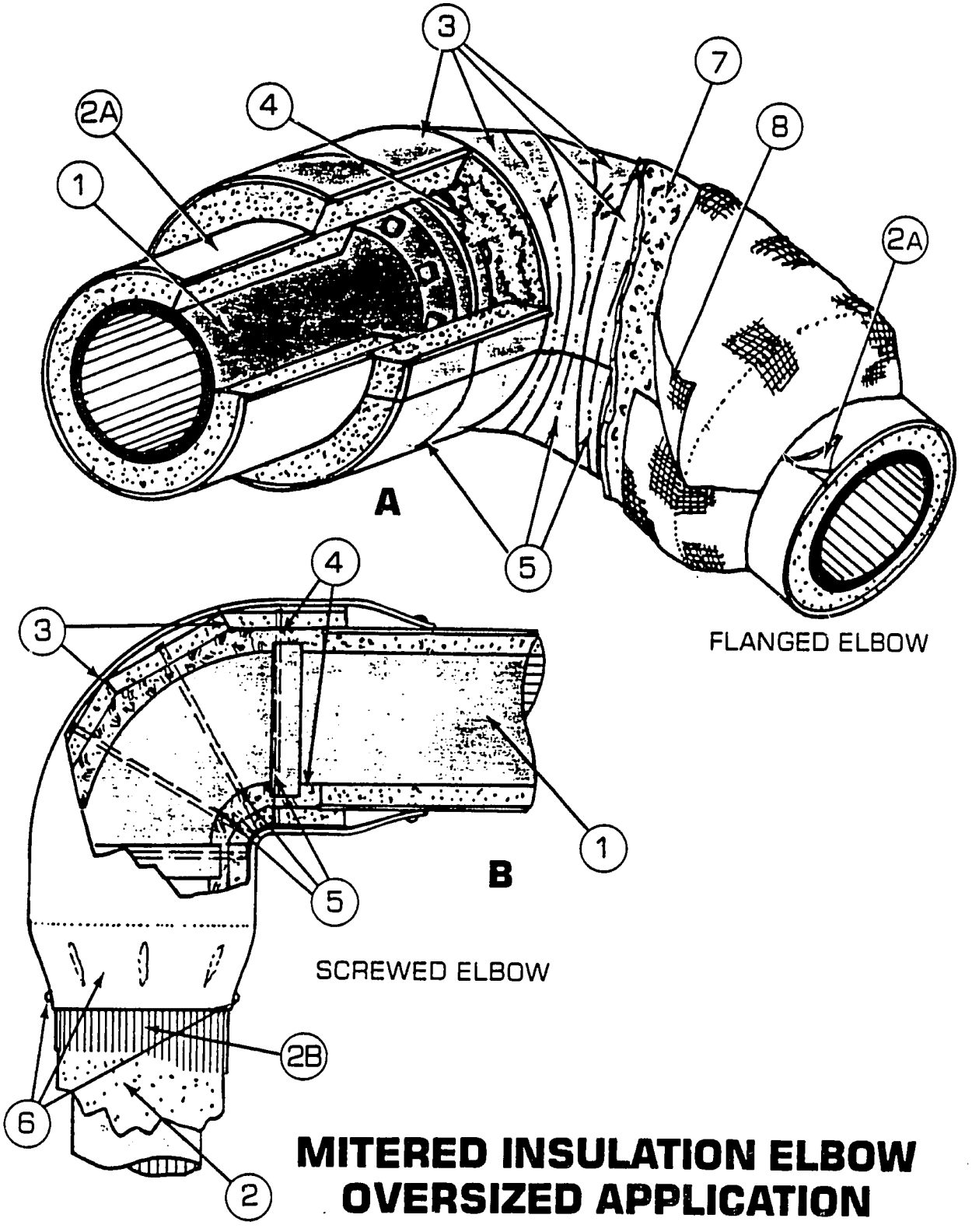

MITERED INSULATION ELBOW OVERSIZED APPLICATION

FITTINGS, ETC.

mica INSULATION STANDARDS
5/79

PLATE NO. 11

PLATE NO. 14

FITTINGS, ETC.
Field or Factory-fabricated Valve/Tee Insulation

The term "fabricated" applies to the construction of a custom sized and shaped insulation installation for fittings, etc., using common forms of insulation such as rigid blocks and pre-formed pipe covering segments. The fabrication may take place in the field, a fabrication shop, or the fitting insulation may be pre-fabricated by a manufacturer. Fitting covers may be similarly fabricated from jacketing materials, or purchased pre-fabricated from the manufacturer. Other finishes include the use of mastics, cements and reinforcing fabrics, or the use of pipe covering segments with factory-applied jacketing, sealed at the joints and bonnet area.

(A) Built-up Application

(B) Oversized Application

(C) Fabrication Components

Materials: Rigid pipe covering, block insulation, glass fiber or other fill insulation, adhesive, pre-fabricated metal valve cover and caulking.

1. Pipe.
2. Pipe insulation (shown with field-applied metal jacketing).
3. Collar of rigid pipe covering sized to clear the flanges.
4. Sleeve of oversized pipe covering sized to cover the body of the valve and overlap onto the flange collar (Insulation thickness is the same as that used on the adjacent piping.)
5. Sleeve of oversized pipe covering sized to cover the bonnet flange and fit snugly into the "V" cut out of the body sleeve.
6. Bonnet collar of rigid block insulation with cut-out for valve stem.
7. Adhesive at joints.
8. Glass fiber or other fill insulation (optional).
9. Caulking around valve stem cut-out (optional-used on cold or outdoors applications).
10. Pre-fabricated metal valve cover.

5/79

48

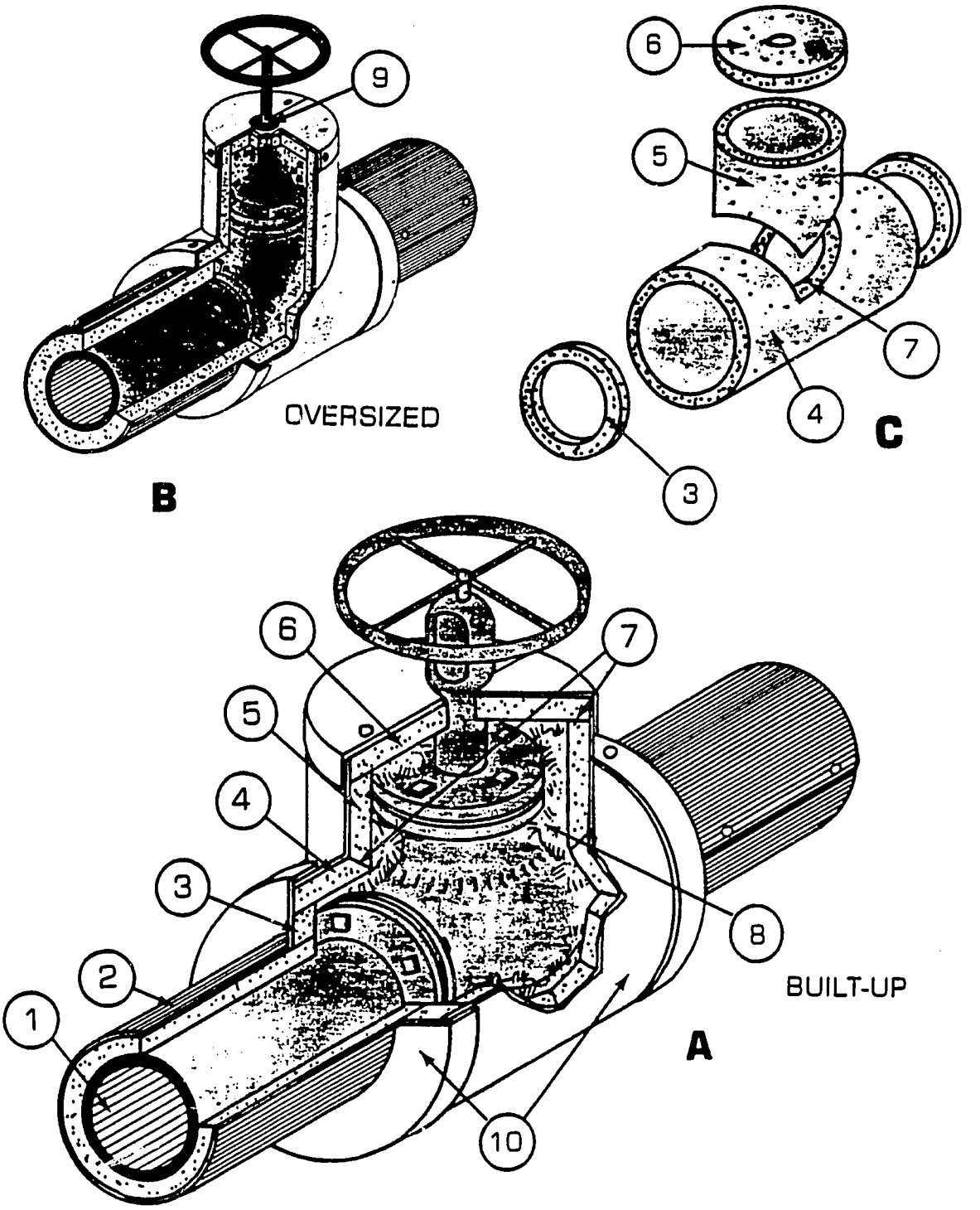

FIELD OR FACTORY-FABRICATED VALVE/TEE INSULATION

PLATE NO. 16

FITTINGS, ETC.
Cement Valve Insulation

Cement is useful in areas where clearances are minimal, surfaces are irregular and where maintenance or replacement is unlikely. On most valves, only the body of the valve is covered with the cement tapered off below the valve bonnet and extended out over the pipe covering. The cement application may or may not require reinforcement mesh or fabric depending on valve size, the thickness of the cement and other considerations.

The application illustrated on **Plate No. 16** shows a fabric finish and is appropriate on moderate and hot applications.

Materials: Mineral fiber and/or one-coat cement, reinforcing wire mesh or glass fabric, fabric covering, adhesive and/or cement.

1. Pipe.
2. Pipe insulation (shown with a factory applied jacket).
3. Layers of insulating cement.
4. Layer of reinforcing wire mesh or glass fabric embedded in the cement.
5. Finishing fabric adhered to the smooth cement surface with adhesive or mastic.

5/79

50

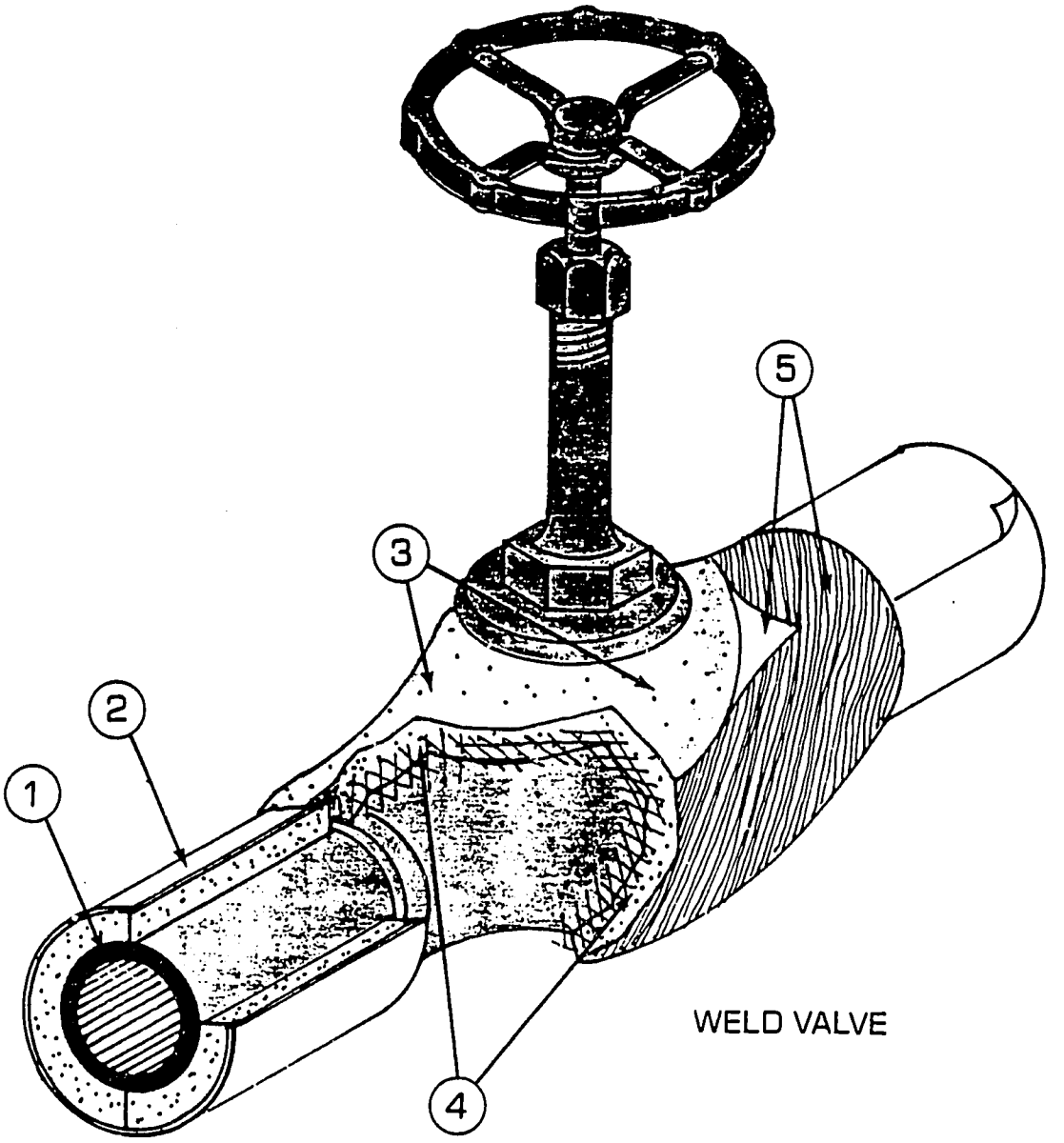

CEMENT VALVE INSULATION

PLATE NO. 30

VESSELS, TANKS AND EQUIPMENT

Small Diameter Vessels/Exhaust Pipe Covering

Hot vessels, tanks, exchangers, round breechings and exhaust ducts having outside diameters of less than 30" can be insulated with large radius pipe covering materials. High rib metal lath may be applied on installations over 600°F as shown on **Plate No. 22**. Alternate methods are the application of rigid blocks or mitered segments as illustrated on **Plate No. 23**.

(A) Vertical application on vessel

(B) Horizontal application on tube exchanger

Materials: Rigid pipe covering segments, discs of rigid block, fill insulation (either pieces of block insulation of glass fiber), sheet metal jacketing, sheet metal screws or pop rivets and stainless steel bands.

1. Vessel wall.
2. Insulation support ring.
3. Pipe covering segments secured with wire or bands.
4. Disk of rigid insulation cut to fit over head and inside pipe covering.
5. Loose fill insulation used as support for top disk.
6. Sheet metal jacketing.
7. Sheet metal screws or pop rivets as required.
8. Stainless steel bands as required.
9. Nozzle. (**See Plate No. 33**.)
10. Insulation cut or beveled away from flanges for bolt removal. Finish as required for temperature and exposure.

5/79

52

SMALL DIAMETER VESSELS/EXHAUST PIPE COVERING

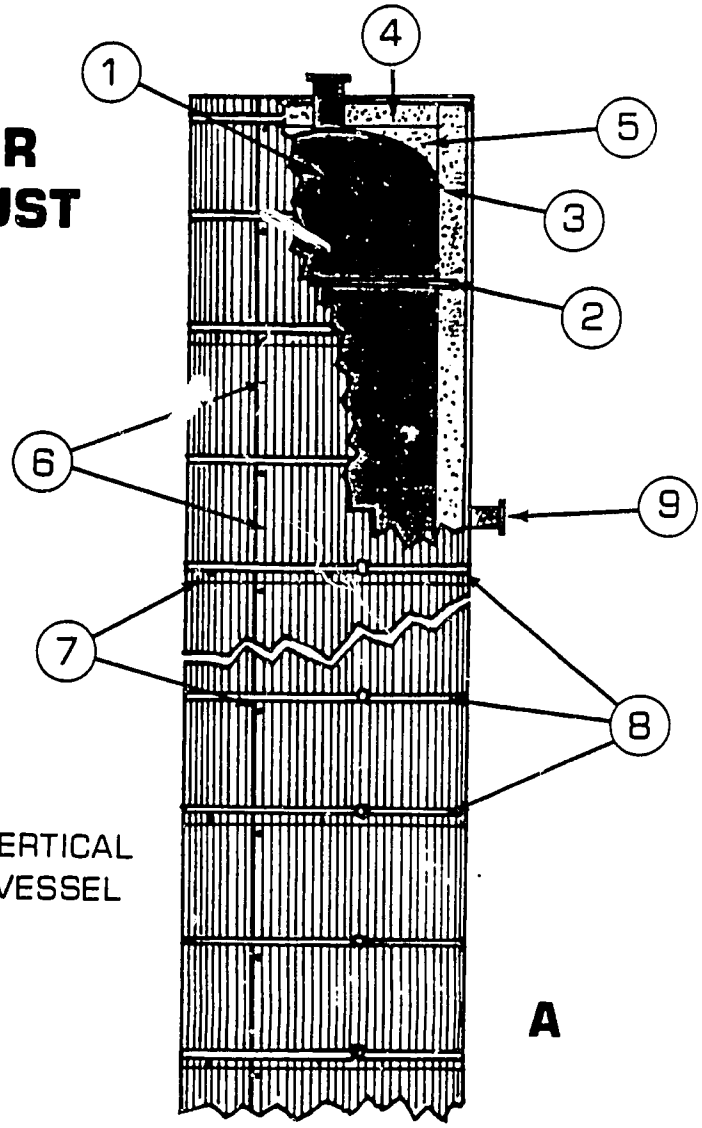

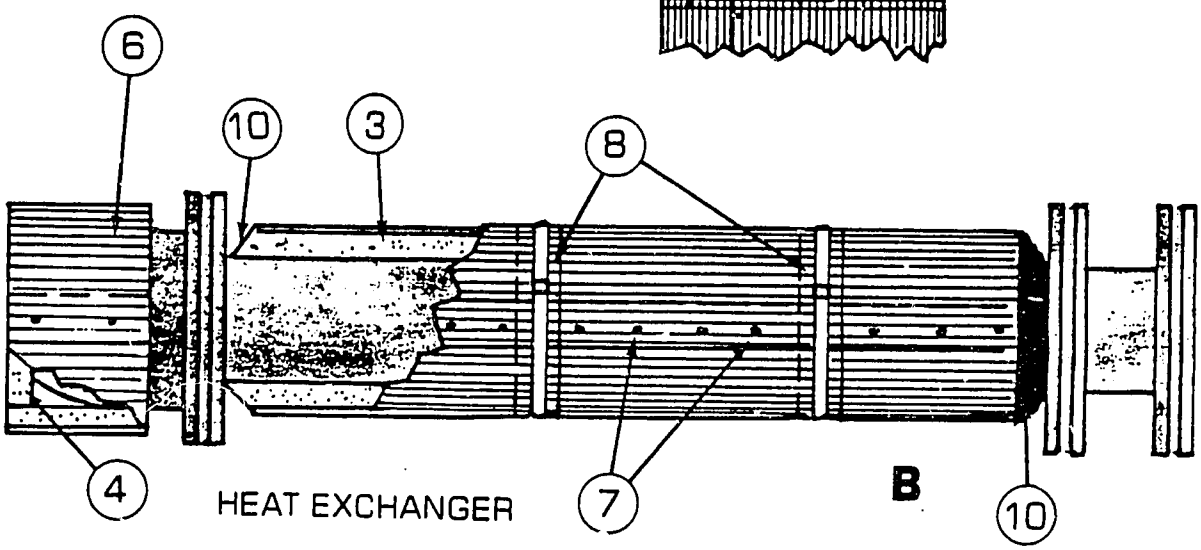

VESSELS, TANKS AND EQUIPMENT

mica INSULATION STANDARDS
5/79

PLATE NO. 30

PLATE NO. 47

REMOVABLE & REUSABLE INSULATION

Formed & Shaped Insulation Covers

Formed and shaped insulation covers are used on equipment and fittings such as valves, flanges, ells, strainers, etc., requiring removable and reusable insulation. The covers are made to conform to the shape of the surface with the curvature and contour pieces neatly mitered and sewed. The covers should have the same appearance as permanent insulation, and overlap and fit to the adjacent insulation. Covers can be produced in single layer for thicknesses up to 4", and in multiple layers for thicknesses over 4".

Materials: Mesh or fabric covered insulation, quilting washers, hooks, lacing wire and staples.

1. Valve.
2. Removable cover.
3. Machine stitching.
4. Metal stitching at edges.
5. Quilting washer.
6. Lacing hooks and wire.
7. Adjacent insulation.

3/83

-54

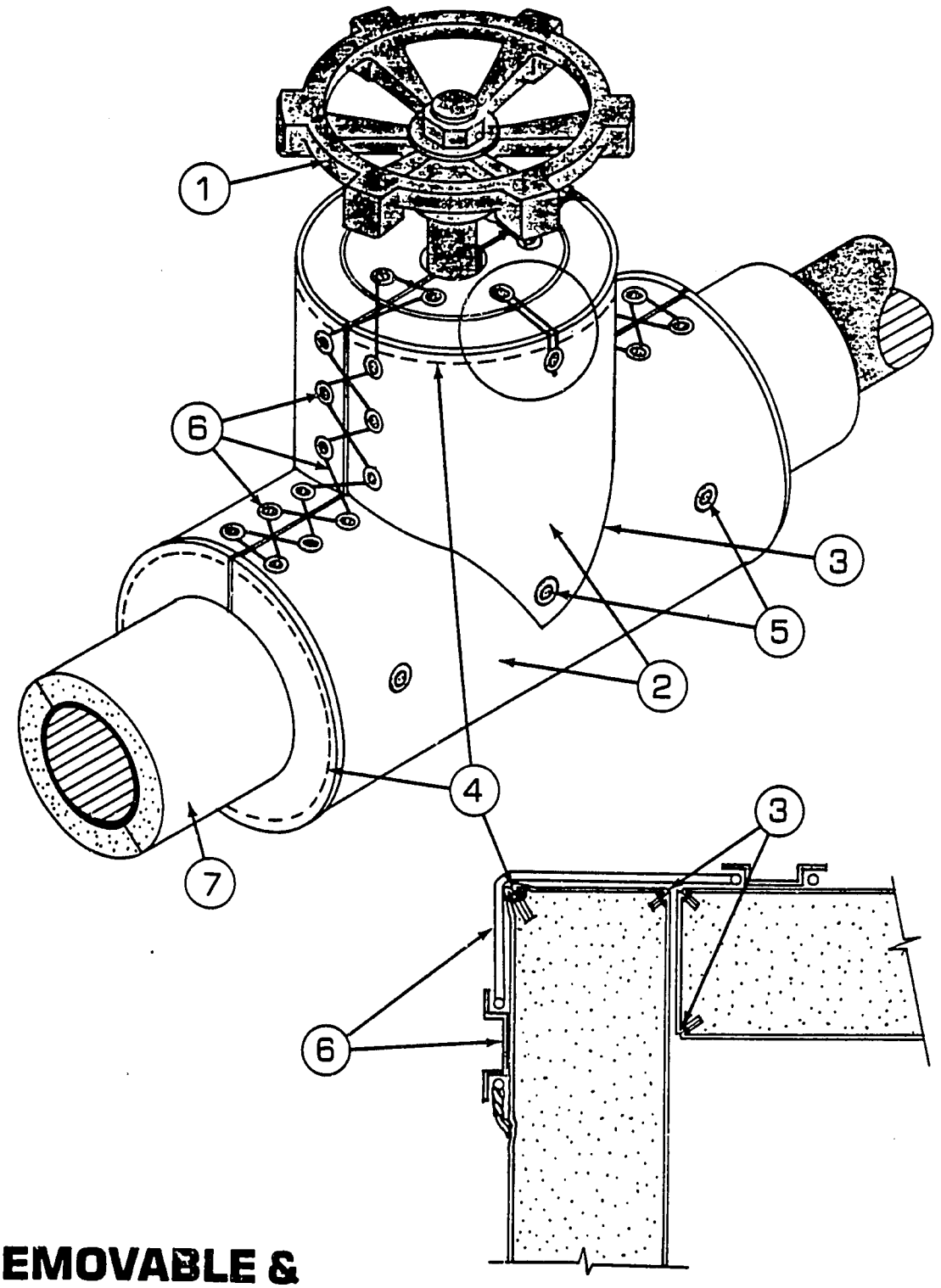

REMOVABLE & REUSABLE INSULATION

FORMED & SHAPED INSULATION COVERS

mica INSULATION STANDARDS
3/83

PLATE NO. 47

55

SUBMITTAL SHEET

OWENS CORNING FIBERGLAS

Fiberglas® Heavy Density Pipe Insulation

- ☐ ASJ/SSL-II® All Service Jacket, Self Sealing Lap
- ☐ ASJ All Service Jacket
- ☐ No-Wrap for Field Jacketing Applications

Uses

Owens-Corning Fiberglas pipe insulations are recommended for use on all hot, cold, concealed and exposed piping operating from 0 F to +850F in commercial, institutional and industrial buildings, process facilities and power plants.

Fiberglas ASJ/SSL-II pipe insulation provides a positive vapor seal over the insulation for condensation control without the use of staples, adhesives or bands.

Fiberglas ASJ pipe insulation is suitable for installations where the appearance and protection of an all service jacket is required and a vapor seal is not essential.

Fiberglas® No-Wrap pipe insulation is appropriate for power, process, marine and industrial applications where a jacket is field-applied for weather protection or abuse resistance.

Description

Owens-Corning Fiberglas pipe insulations are molded of heavy density resin-bonded inorganic glass fibers. These one-piece, three-foot long sections are opened, placed over the pipe, closed, and secured by means specific to the type as described below.

Fiberglas ASJ/SSL-II pipe insulation is wrapped with a kraft reinforced foil vapor retarder jacket with two factory-applied pressure sensitive adhesives which provide positive closure and vapor sealing of the longitudinal joint, even at ambient temperatures as low as 25F. This sealing system completely eliminates the need for staples, adhesives or bands. Self-sealing butt strips are provided in the carton with the insulation for sealing circumferential joints.

Fiberglas ASJ pipe insulation is wrapped with the same all-service jacket as ASJ/SSL-II pipe insulation, but does not have a longitudinal lap seal. The longitudinal lap is closed at the job-site by stapling. Vapor barrier mastic must be used in addition if a vapor seal is required. The use of Fiberglas ASJ pipe insulation where a vapor seal is needed requires more field labor, and therefore a higher installed cost, than if Fiberglas ASJ/SSL-II pipe insulation were to be used.

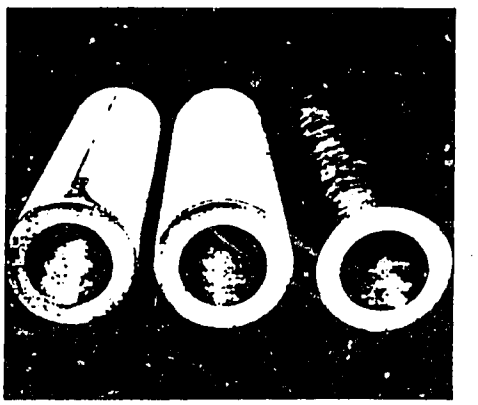

Fiberglas No-Wrap pipe insulation is supplied in one-piece sections without jacketing, and ready for field installation of covering appropriate to the vapor control, damage or corrosion resistance requirements of the application.

Physical Properties*

	ASJ/ SSL-II	ASJ	No-Wrap
Pipe operating temperature range	0 to +850 F	0 to +850 F	0 to +850 F
Jacket temperature limitation	-20 F to +150 F	-20 F to +150 F	N/A
Jacket permeance, perm (ASTM E 96)	0.02	0.02	N/A
Jacket puncture resistance, units (ASTM D 781)	50	50	N/A
Composite surface burning characteristics:	UL 723	UL 723	ASTM E 84
Flame Spread**	25**	25**	25**
Smoke developed	50	50	50

*All properties subject to normal manufacturing tolerances.

**The surface burning characteristics of these products have been determined in accordance with ASTM E 84 or UL 723 as noted above. These standards should be used to measure and describe the properties of materials, products or assemblies in response to heat and flame under controlled laboratory conditions and should not be used to describe or appraise the fire hazard or fire risk of materials, products or assemblies under actual fire conditions. However, results of these tests may be used as elements of a fire risk assessment which takes into account all of the factors which are pertinent to an assessment of the fire hazard of a particular end use. Values are reported to the nearest five rating.

Thermal conductivity (ASTM C 335)

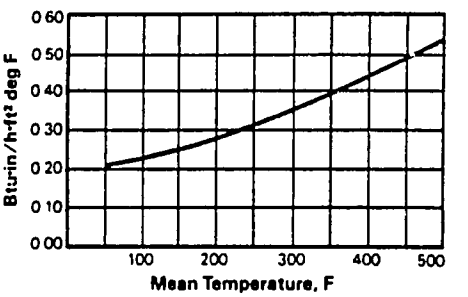

Thermal conductivity values are nominal, subject to normal testing and manufacturing tolerances.

Product Availability
Fiberglas pipe insulations are available in thicknesses and for pipe sizes as shown below.

Within the ranges as shown, Fiberglas pipe insulations are also available in all copper tube sizes (CTS) from ⅝" to 6⅛".

	NOMINAL PIPE SIZES (NPS)		
Insulation thickness	ASJ/SSL-II insulation	ASJ pipe insulation	No-Wrap pipe insulation
0.5"	0.5"- 6.0"	0.5"- 6.0"	0.5"- 6.0"
1.0"	0.5"-15.0"	0.5"-33.0"	0.5"-33.0"
1.5"	0.5"-14.0"	0.5"-33.0"	0.5"-33.0"
2.0"	0.5"-12.0"	0.5"-33.0"	0.5"-33.0"
2.5"	2.0"-11.0"	2.0"-26.0"	2.0"-32.0"
3.0"	3.0"-10.0"	3.0"-21.0"	3.0"-36.0"
3.5"	4.5"- 9.0"	4.5"-17.0"	4.5"-30.0"
4.0"	4.5"- 8.0"	4.5"-14.0"	4.5"-29.0"
4.5"	6.0"- 7.0"	6.0"- 9.0"	6.0"-28.0"
5.0"	6.0"	6.0"- 8.0"	6.0"-27.0"
5.5"		6.0"	6.0"-26.0"
6.0"			6.0"-25.0"

ASHRAE 90A-1980 Insulation Thickness Guide Specification

Table 5.1 Minimum pipe insulation*

			Insulation thickness for pipe sizes				
Piping System Types	Fluid Temperature Range		Runouts 2" max. 12' lgth	1" & less	1¼" to 2"	2½" to 4"	5" and over
Heating systems Steam & Hot Water	°C	°F	in.	in.	in.	in.	in.
High pressure/ temperature	158-238	306-450	1.5	2.5	2.5	3.0	3.5
Medium pressure/ temperature	122-151	251-305	1.5	2.0	2.5	2.5	3.0
Low pressure/ temperature	94-121	201-250	1.0	1.5	1.5	2.0	2.0
Low temperature	43-93	120-200	0.5	1.0	1.0	1.5	1.5
Steam condensate for feed water	any	any	1.0	1.0	1.5	2.0	2.0
Cooling systems							
Chilled water, refrigerant	4.5-13	40-50	0.5	0.5	0.75	1.0	1.0
or brine	below 4.5	below 40	1.0	1.0	1.5	1.5	1.5

*Thicknesses shown are for conditioned spaces; for piping exposed to outdoor temperatures, increase thickness by 0.5".

Thickness recommendations to prevent surface condensation

Design Conditions	Pipe Sizes	Fluid temperature 50F	35F	0F
80F at 50% RH	⅝" OD thru 6" NPS	½"	½"	½"
80F at 50% RH	7" OD thru 12" NPS	1"	1"	1"
85F at 70% RH	⅝" OD thru 6" NPS	½"	½"	½"
85F at 70% RH	7" OD thru 12" NPS	1"	1"	1"
90F at 80% RH	⅝" OD thru 1" NPS	½"	1"	1"
90F at 80% RH	1⅝" OD thru 12" NPS	1"	1"	1½"

Derived from ASTM C 680 "Recommended Practice for determination of Heat Loss or Gain". Emittance: 0.9. Wind velocity: 0 mph.

Specification Compliance
Fiberglas pipe insulations comply with the property requirements of the following specifications:

	ASJ/ SSL-II*	ASJ	No-Wrap
HH-B-100B, Type I and II: Barrier Material, Vapor	●	●	
HH-I-558B (Amend.3), Form D, Type III, Class 12 and 13: Insulation (Pipe and Tube Covering) and Pipe Fitting Covering	●	●	●
MIL-I-24344C (Ships)*: Insulation, Pipe Covering, Thermal	●	●	●
MIL-I-24244B (Ships): Insulation Material	●	●	●
U.S. Coast Guard 164.009: Non-Combustible Materials			●
Nuclear Regulatory Commission Guide 1.36: Non-Metallic Thermal Insulation (1)	●	●	●
ASTM C 547, Class 1 and 2: Mineral Fiber Pipe Insulation.	●	●	●
ASTM C 795: Thermal Insulation for Use over Stainless Steel. (1)	●	●	●
New York City MEA No. 344-83	●	●	●

*Requires waiver of alkalinity and pH requirements. (1) Lot testing may be required.

Caution: It is possible that heat may be generated from the resinous binder in insulations if ignited by external sources such as welding slag, cutting torches, etc. care should be taken to avoid direct contact with the insulation by fire or ignition sources.

Organic binders used in the manufacture of fibrous glass pipe insulation decompose to some extent at operating temperatures above 350F. Thermal performance of the insulation is not affected by the loss of binder, but compressive strength and resiliency are altered. An acrid odor and smoke will emit from the insulation on piping start-up. Provide adequate ventilation to prevent buildup of gases. Pipe supports at hangers should be from the pipe itself or from high-compressive inserts such as Kaylo® asbestos-free pipe insulation. Minimum insulation thickness should be sufficient to provide personnel protection. Maximum insulation thickness should not exceed six (6) inches. If piping will be subjected to excessive vibration, consult your Owens-Corning Fiberglas representative for recommendations. For piping operating above 650F, insulation should be applied in a single layer.

The recommended insulation thicknesses shown in the ASHRAE 90A-1980 table at left are based on economic considerations only and do not attempt to prevent surface condensation. The table below left shows recommended insulation thicknesses to prevent surface condensation for frequently encountered design conditions.

OWENS/CORNING FIBERGLAS

OWENS-CORNING FIBERGLAS CORP.
Mechanical Insulation Products
Fiberglas Tower, Toledo, Ohio 43659

Pub. 5-IN-14726-C Litho in USA November 1988

Copyright © 1988 Owens-Corning Fiberglas Corp.

SH-2

51

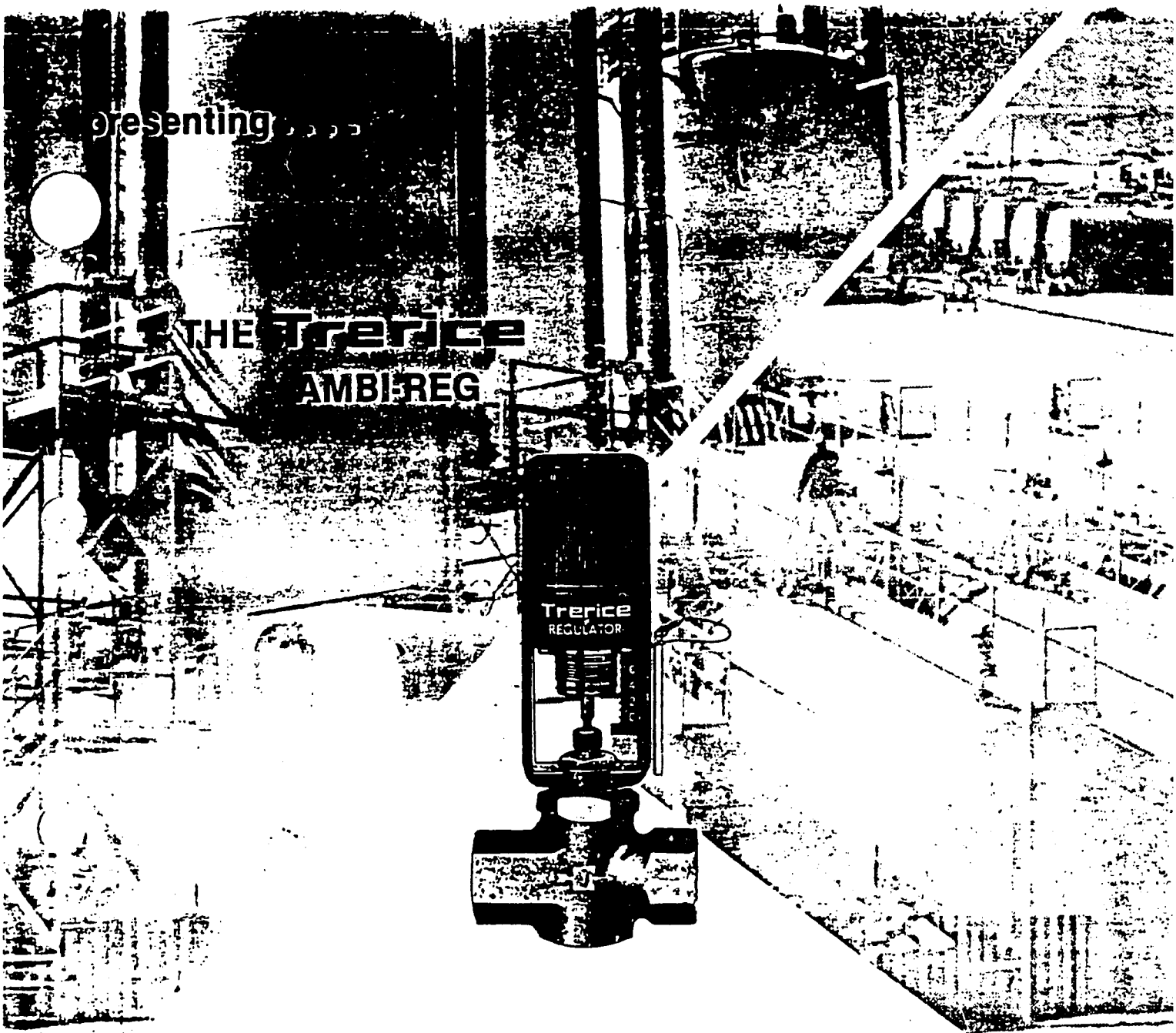

A SELF-CONTAINED TEMPERATURE CONTROL VALVE FOR USE ON PLANT STEAM TRACER LINES

Trerice®

H. O. Trerice Co.

MANUFACTURERS OF
TEMPERATURE & PRESSURE INSTRUMENTS

BULLETIN NO. 501

DISTRIBUTED BY:

58

Trerice

AMBI-REG

SELF-OPERATING TEMPERATURE REGULATOR

APPLICATION

The TRERICE AMBI-REG TEMPERATURE CONTROL VALVE has been designed to sense the ambient temperature of its immediate environment. It is therefore ideally suited for installation on steam tracer lines providing protection against freezing for outside pipelines, storage tanks, and plant instrumentation. It can be also used on other types of equipment where control is based on ambient temperature. The AMBI-REG is totally self-contained and performs its control function without an external power source such as electricity or plant air. Requiring little or no maintenance once installed, the TRERICE AMBI-REG SELF-CONTAINED TEMPERATURE REGULATOR can be relied upon to provide years of accurate, uninterrupted service, and continued energy savings.

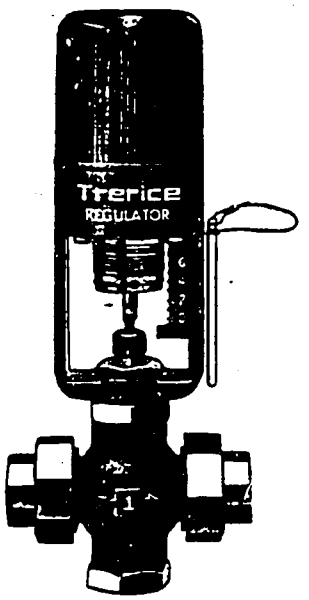

FEATURES

The TRERICE AMBI-REG REGULATOR when installed on your steam tracer lines will provide:

- ENERGY SAVINGS.
- PROTECTION AGAINST COSTLY FREEZE-UPS.

And because of its self-contained design will

- CUT DOWN ON MAINTENANCE COSTS.
- PROVIDE IN LINE SERVICIBILITY.

CONSTRUCTION

The TRERICE AMBI-REG is ruggedly built. The yoke and cap are heavy aluminum castings. Lifetime lubrication is incorporated in the adjustment screw bushing. The teflon valve packing is also self-lubricated. The adjustment spring and thermal system bellows are enclosed and protected from corrosive conditions. This regulator has been designed to insure its user years of trouble free service.

SPECIFICATIONS

The TRERICE AMBI-REG can be ordered with the following standard specifications.

PORT SIZES: ⅛", 3/16", ¼", 3/8", ½", ¾", 1", 1¼", 1½", 2".

VALVE MATERIAL AND END CONNECTIONS: Bronze body, union ends — ½" thru 2", Cast steel body, screwed ends — ¾" and 1", Bar stock valve in brass, steel, 304 and 316 S.S. — ¼".

TRIM AND ACTION: Single seated, stainless steel trim, decrease in temperature causes the valve to open.

CONTROL RANGE: 20 to 70°F (−10 to 20°C) standard. For other ranges consult factory.

NOTE: OTHER VALVE BODY MATERIALS, SIZES, TRIMS, ACTIONS, AND CONTROL RANGES ARE AVAILABLE ON SPECIAL ORDER. CONTACT YOUR LOCAL TRERICE REPRESENTATIVE OR CONSULT THE FACTORY.

59

Trerice

ACTUATOR AND VALVE SELECTION CHART

AMBI-REG ACTUATORS		
RECOMMENDED	RANGE	NUMBER
Freeze Protection 40 to 70°F.	20 to 70°F.	EA01

Actuator

VALVES SINGLE SEAT — STAINLESS TRIM — TO CLOSE WITH TEMPERATURE RISE				
BODY MATERIAL	NPT CONN.	SIZE	NUMBER	
BRONZE Malleable Union Ends NPT Threads	½"	1/8"	164-0063.11A	 Bronze Bodied Valve Assembly
		3/16"	164-0063.9A	
		¼"	164-0063.7A	
		⅜"	164-0063.5A	
		½"	164-0063.2A	
	¾"	¾"	164-0064.2A	
	1"	1"	164-0065.2A	
	1¼"	1¼"	164-0066.2A	
	1½"	1½"	164-0067.2A	
	2"	2"	164-0068.2A	
STEEL THREADED ENDS	¾"	⅛"	164-0148.1A	 Cast Steel Valve Assembly
		3/16"	164-0148.2A	
		¼"	164-0148.3A	
		⅜"	164-0148.4A	
		½"	164-0156.1A	
		¾"	164-0153.1A	
	1"	⅛"	164-0148.51A	
		3/16"	164-0148.52A	
		¼"	164-0148.53A	
		⅜"	164-0148.54A	
		½"	164-0154.1A	
		¾"	164-0155.1A	
		1"	164-0152.1A	

MAXIMUM PSID (SHUT OFF DIFFERENTIAL)	
⅛" thru ½"	250
¾"	140
1"	80
1¼"	50
1½"	35
2"	20

EXAMPLE OF HOW TO ORDER
EXAMPLE: To order a ¾" bronze body TRERICE AMBI-REG, add proper valve number to actuator number EA01. Proper ordering number is EA01 with 164-0064.2A.

BAR STOCK BODY AMBI-REG AVAILABLE ONLY AS A COMPLETE UNIT AS LISTED			
BODY MATERIAL	NUMBER		 Bar Stock Valve
Steel	ENL25F01	Not Available As Separate Actuator or Body	
Brass	ENK25F01		
303 Stainless Steel	ENM25F01		
316 Stainless Steel	ENN25F01		

NEW

"ENERGY CONSERVING"

ANTI-FREEZE PROTECTION"

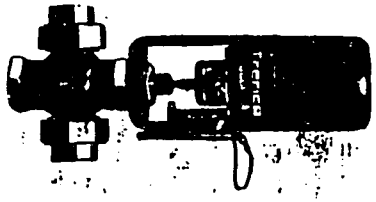

THE AMBI-REG AMBIENT SENSING CONTROL VALVE

H.O. Trerice Co.
12950 W. Eight Mile Rd.
Detroit, Mich. 48237
ADDRESS CORRECTION REQUESTED

HOME OF [illegible]AND FACTORY

H.O. Trerice Co.

12950 W. EIGHT MILE RD.
DETROIT, MI, U.S.A. 48237
PHONE: (313) 399-8000
TELEX NO. 6715460 HO TRERICE · FAX NO. 3133997246

FACTORY BRANCH OFFICES

ATLANTA OFFICE
120 W. Wieuca Rd., Suite 205
Atlanta, GA 30342
Phone: (404) 256-4183

BOSTON OFFICE
633 Trapelo
Waltham, MA 02154
Phone: (617) 893-6153

CHICAGO OFFICE
2525 E. Oakton, Suite D-43
Arlington Hgts, IL 60005
Phone: (312) 640-8440

CLEVELAND OFFICE
4407 Brookpark Rd.
Cleveland, OH 44134
Phone: (216) 749-4100

COLUMBUS OFFICE
1735 Soshoni
Circleville, OH 43113
Phone: 614) 224-3313

DALLAS OFFICE
1140 Empire Central Place, Suite 104
Dallas, TX 75247
Phone: (214) 637-3375

FLINT OFFICE
129 N. Corbin
Holly, MI 48442
Phone: (313) 234-5603

INDIANAPOLIS OFFICE
3512 Rockville Rd., Suite 119B
Indianapolis, IN 46222
Phone: (317) 243-7371

KALAMAZOO OFFICE
2504 Main St.
Kalamazoo, MI 49007
Kalamazoo: (616) 388-3831
Grand Rapids: (616) 235-0550

LOS ANGELES OFFICE
7625 Rosecrans Ave., Suite 2
Paramount, CA 90723
Phone: (213) 633-3936

MILWAUKEE OFFICE
N58 W18335 Juniper Lane
P.O. Box 884
Menomonee Falls, WI 53051
Phone: (414) 252-3677

NEW ORLEANS OFFICE
950 Manson Rd.
Marrero, LA 70072
Phone: (504) 340-4981

NEW YORK OFFICE
1430 Bergen Blvd.
Fort Lee, NJ 07024
Phone: (201) 461-7035

PHILADELPHIA OFFICE
1325 O'Reilly Rd., Suite 3
Feasterville, PA 19047
Phone: (215) 364-5156

ST. LOUIS OFFICE
6973 Chippewa
St. Louis, MO 63109
Phone: (314) 645-5449

TAMPA OFFICE
5700 Memorial Hwy., Suite 113
Tampa, FL 33615
Phone: (813) 884-8180

TOLEDO OFFICE
5249 Secor Rd.
Toledo, OH 43623
Phone: (419) 473-2601

CANADIAN HEAD OFFICE & FACTORY

H.O. Trerice Co.

1935 HURON CHURCH RD.
WINDSOR, ONT., CANADA N9C 2L6
PHONE: (519) 966-5666
FAX NO. 5199667320 — TELEX NO. 06477942

MONTREAL OFFICE
415 Bourke Ave., Suite 154
Dorval, Quebec H9S 3W9
Phone: (514) 636-9110
TELEX NO. 05822684

TORONTO OFFICE
2395 Cawthra Rd.
Mississauga, Ont. L5A 2W8
Phone: (416) 276-2340
TELEX NO. 06961443

1188 PTD U.S.A.

INDUSTRIAL THERMOMETERS

Furnished in 5, 7, 9 & 12" scale cases with standard ranges between −40 & 1000°F.

DIAL THERMOMETERS

Furnished in 3½, 4½, 6 & 8½" dial sizes, vapor, liquid, gas or mercury actuated, with standard ranges between −40 to 1000°F. Also bimetal dials in sizes 1¾", 3" and 5".

RECORDING THERMOMETERS

The L86000 10" chart recorder has S.A.M.A. class 1B thermal system and is supplied with ranges from −40 to 1000°F.

OTHER TRERICE PRODUCTS

PRESSURE GAUGES

Furnished in 2½, 3½, 4½, 6 & 8½" dial sizes, bronze, steel, stainless steel bourdon tubes with standard ranges from 30" Vac. to 30,000 psi. Dry or liquid filled.

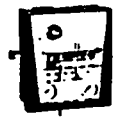

TEMPERATURE CONTROLLERS

Designed to control temperatures or pressures in vessels, tanks, etc. No. 87700 pneumatic, No. L84000 electric.

PRESSURE REDUCING VALVES

Furnished in self contained or pilot operated types. Valve sizes ¼" thru 6", steam, water, air, oil & gas.

STEAM TRAPS

Featuring the patented "ROTATING VALVE". Sizes ½" thru 2".

Trerice

MANUFACTURERS OF
TEMPERATURE & PRESSURE INSTRUMENTS / CONTROLS

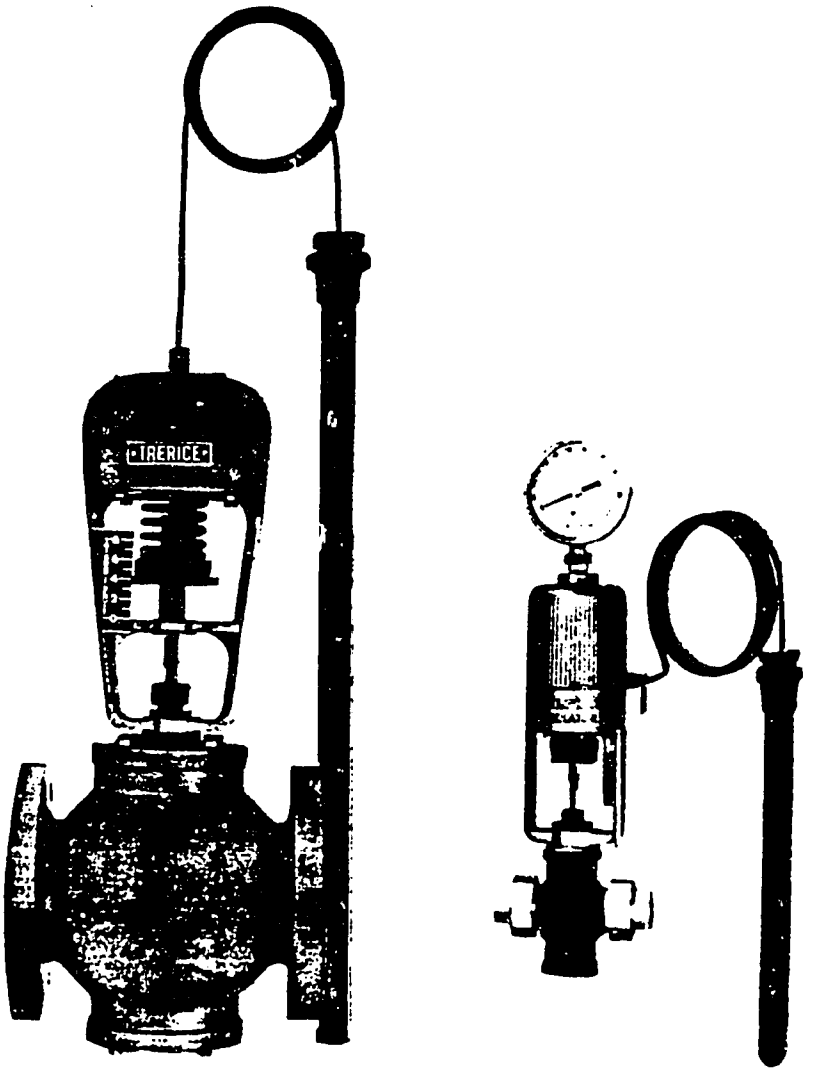

SELF-CONTAINED
TEMPERATURE REGULATORS

62'

CATALOG NO. 150U

Trerice

TEMPERATURE REGULATORS
91000 & 91400
VALVE BODIES

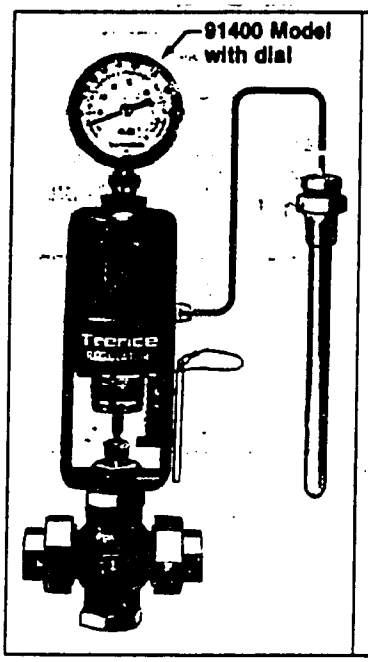

91000 & 91400 COMPACT ACTUATOR CONSTRUCTION

The compact actuator uses precision die cast housings for exceptionally accurate alignment of axis, with durability to retain this alignment for the life of the unit. Stampings can deform and cause binding of the required free moving stem.

The adjustment screw is dry lubricant impregnated sintered bronze for corrosion resistance and ease of adjusting for the life of the unit.

The stem seals are self-lubricating teflon and stainless steel spring loaded for durable and maintenance free service. The bellows and spring are enclosed for extra protection against adverse environments.

An adjusting bar is attached to the unit to be readily available if change of setting is desired.

The adjustable dial indicator mounted on the top of the compact indicating 91400 model rotates and tilts for positioning at the best viewing angle. This dial indicates the actual bulb internal temperature that is generating the valve operating thrust and in no way inhibits the valve action.

SIZES: ⅛" thru 2" Two Way Bronze.
½" thru 2" Three Way Bronze.
1" thru 2" Two and Three Way 316SS.
⅛" thru 1" Two Way Steel.
2½" thru 3" Two Way Cast Iron

COMPACT ACTUATOR VALVE BODIES – BRONZE – SINGLE SEAT

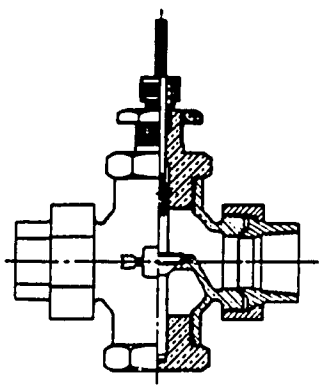

VALVE BODIES – SINGLE SEAT

MATERIAL	SIZE: PORT NOMINAL	SIZE: NPT CONN.	VALVE NUMBER – STEM MOVES IN: TO CLOSE On Temp. Rise Heating	REF.	TO OPEN On Temp. Rise Cooling	REF.	TRIM	MAX. INLET PSIG	Cv	END TO END DIM.
410°F 250 PSI Cast Bronze Body With Malleable Iron Union Ends	1/8"	½"	AAS	A02	BAS	A03	SS	250	.17	4.8
	3/16"		ABS	A05	BBS	A06			.35	
	¼"		ACS	A08	BCS	A09			.7	
	⅜"		ADS	A11	BDS	A12			1.4	
	½"		AES	A14	BES	A15	SS	250	2.8	4.8
	¾"		AGS	A19	BGS	A22		140	5.6	5.6
	1"		AIS	A26	BIS	A30		80	8.4	6
	1¼"		AKS	A36	BKS	A41	SS	50	15	7.2
	1½"		AMS	A47	BMS	A52		35	21	7.7
	2"		AOS	A58	BOS	A63		20	33	8.6

Trerice

TEMPERATURE REGULATORS
DIMENSIONS

Nos. 91000 & 91400 ½" thru 2" NPT sizes with union ends. 2½" & 3" sizes with 125 psi standard flanged ends.

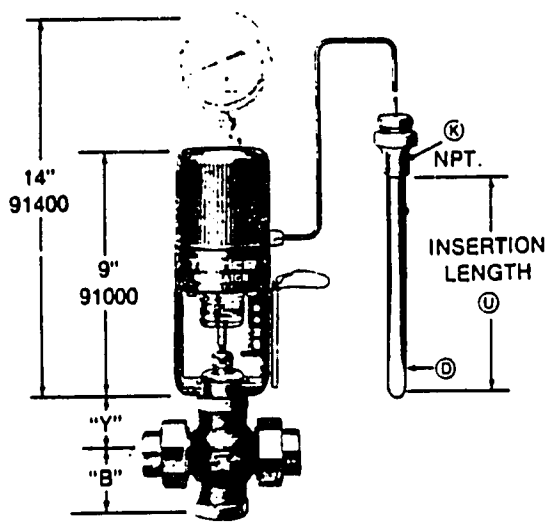

Nos. 91000L sizes 4" and up and 91000L 3 Way, 2½" and up.

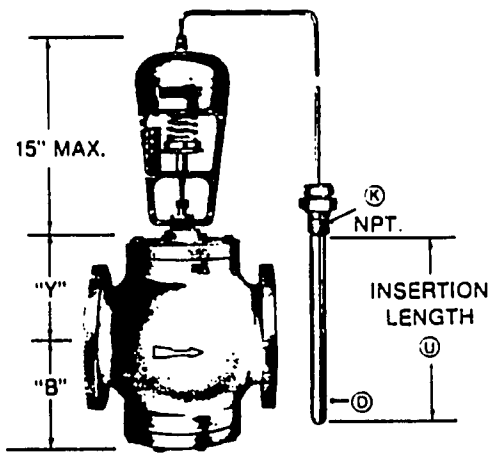

DIMENSIONS		
NPT	"Y"	"B" 3 WAY
½	1.8	1.8
¾	2.3	2.3
1	2.3	2.3
1¼	2.6	2.8
1½	2.6	3.5
2	3.1	4.1

DIMENSIONS		
NPT	"Y"	"B" 3 WAY
2½	4.6	7
3	5.4	8
4	5.6	10
5	6.7	
6	7.8	

BULB DIMENSIONS – 91000 – 91400 – 91000L

ACTUATOR TYPE	Plain or Adjustable Connection				Union Connection with Bushing				Union Connection with Well			
	Ⓓ	Ⓚ	Ⓐ Bulb Lgth.		Ⓓ	Ⓚ	Ⓤ Insertion Lgth.		Ⓓ	Ⓚ	Ⓤ Insertion Lgth.	
	Dia.	NPT	8 ft.	16 ft.	Dia.	NPT	8 ft.	16 ft.	Dia.	NPT	8 ft.	16 ft.
*91000 *91400	1	1	13	13	1	1	12¼	12¼	1⅛	1¼	12¼	12¼
†91000L	1¼	1¼	27	29	1¼	1¼	26¼	28¼	1⅜	1½	26¼	28¼

*For 20 ft. tubing Ⓐ = 16", over 20 ft. to 36 ft. Ⓐ = 20". †Ⓐ increases by 1" for each 4 ft. tubing increment.

SPECIAL ACTUATORS WITH SMALLER BULB AND FITTING

COMPACT ACTUATOR ONLY – (Thru 3" 2 Way - Thru 2" 3 Way Only)

When the actuator housing temperature will always remain lower than the control bulb temperature in operation, a smaller ¾" x 9" nominal length is available when necessary. Insertion Ⓤ length is 8¼". Union connection bulbs have ¾" NPT threads on bushing & 1" NPT threads on well. Not available in plain connection. Use standard bulb numbers, but state smaller dimension Ⓤ length required when specifying bulb.

NO. 91000L LARGE ACTUATOR ONLY – (4" & Up 2 Way And 2½" & Up 3 Way Only)

When the actuator housing temperature will always remain lower than the control bulb temperature in operation, a smaller 1¼" x 13" nominal length is available when necessary. Insertion Ⓤ length is 12¼". Union connection bulbs have 1¼" NPT threads on bushing & 1½" NPT threads on well. Not available in plain connection. Use standard bulb numbers, but state smaller dimension Ⓤ length required when specifying bulb.

64

Trerice

TEMPERATURE REGULATORS
TYPICAL APPLICATIONS
NOS. 91000 & 91400

INSTALLATION OF NO. 91400 REGULATOR ON STORAGE TYPE H.W. HEATER

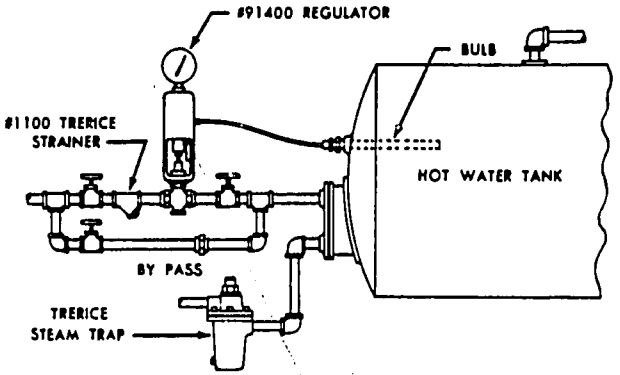

INSTALLATION OF #91400 REGULATOR CONTROLLING FUEL OIL TEMPERATURE

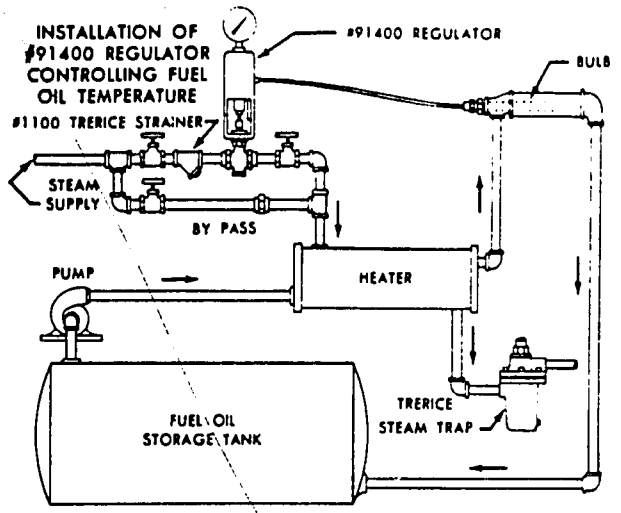

INSTALLATION OF NO. 91400 REGULATOR CONTROLLING TEMPERATURE OF PLATING OR PICKLING TANK.

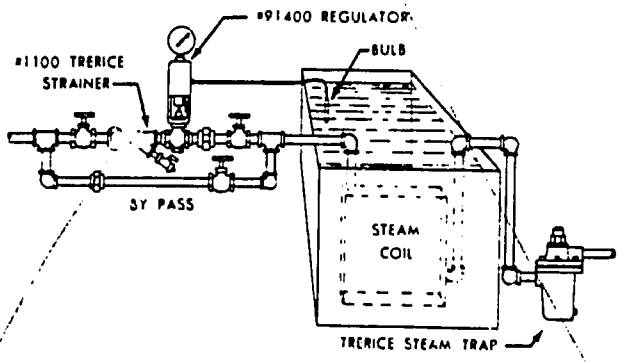

INSTALLATION OF NO. 91000 REGULATOR CONTROLLING COOLING WATER JACKET TEMPERATURE ON AIR COMPRESSOR

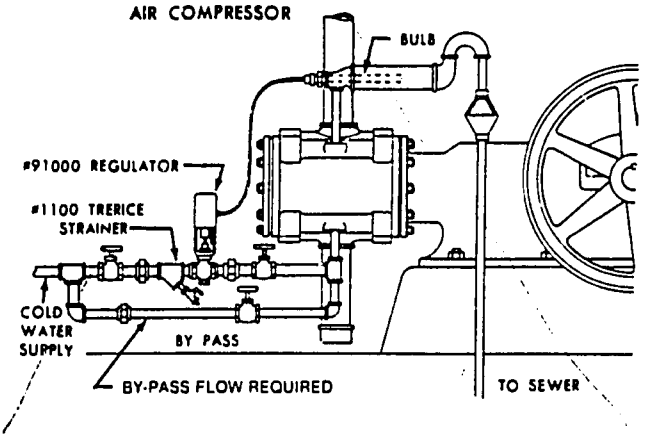

INSTALLATION OF NO. 91000 3-WAY VALVE CONTROLLING COOLING WATER TEMPERATURE ON A DIESEL ENGINE

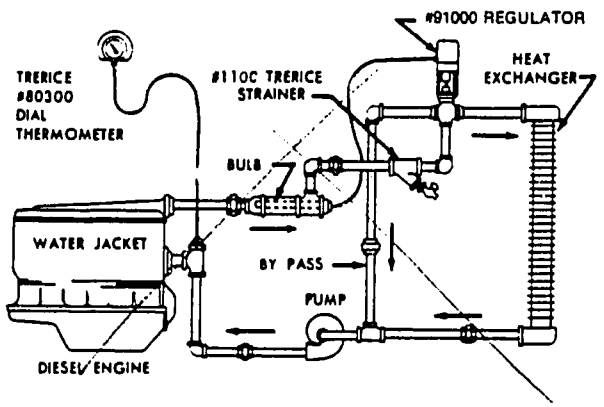

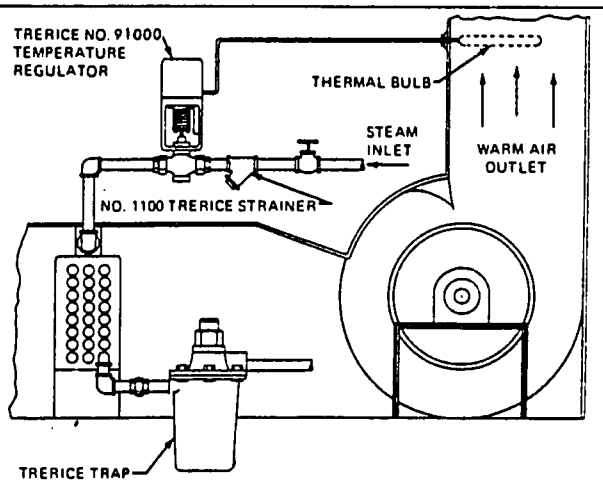

NO. 91000 TEMPERATURE REGULATOR CONTROLLING HEATING COIL IN AN AIR CIRCULATING UNIT.

Trerice

TEMPERATURE REGULATORS
TYPICAL APPLICATIONS
NO. 91600

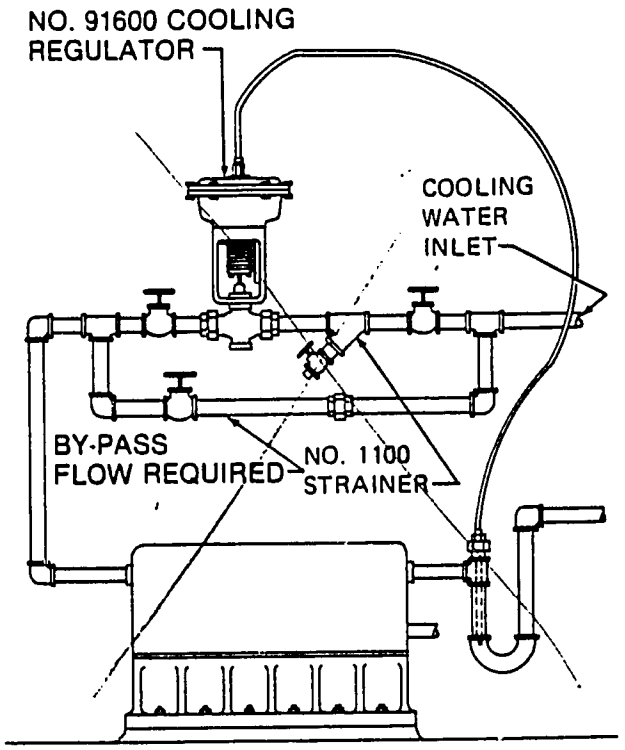

TRERICE "SAFETY-TYPE" REGULATOR CONTROLLING FLOW OF COOLING WATER THRU ENGINE.

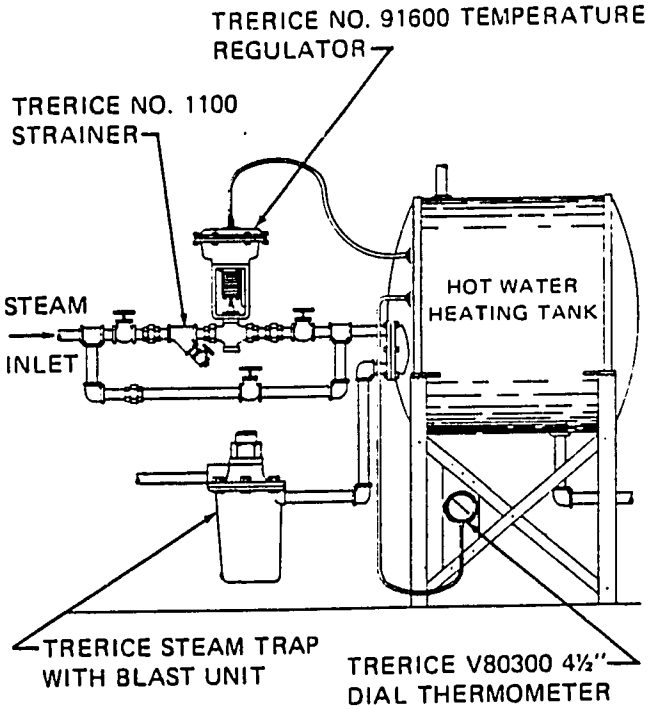

TRERICE "SAFETY-TYPE" TEMPERATURE REGULATOR CONTROLLING THE FLOW OF STEAM TO HOT WATER TANK HEATER.

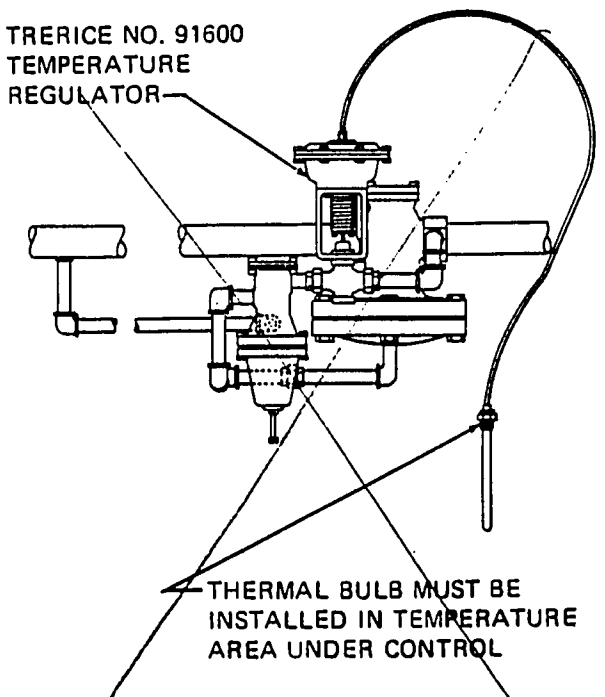

NO. 91600 "SAFETY-TYPE" REGULATOR BEING USED AS A TEMPERATURE PILOT TO CONTROL THE FLOW OF STEAM THRU MAIN VALVE TO DOWNSTREAM HEATER.

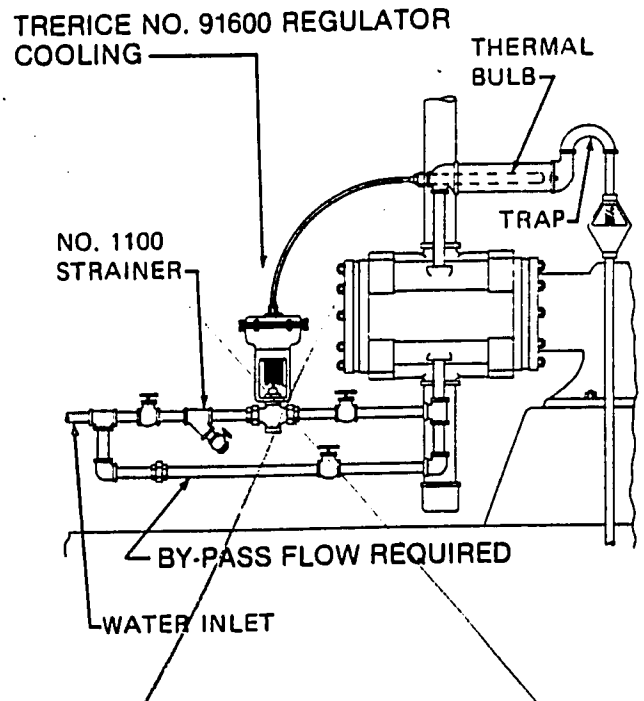

TRERICE "SAFETY-TYPE" TEMPERATURE REGULATOR CONTROLLING THE FLOW OF COOLING WATER THRU COMPRESSOR.

-66

Trerice

CAPACITY TABLES
WATER FACTOR W_v

PSID	W_v
*PRESSURE DIFFERENTIAL INLET TO OUTLET	VALVE WATER FACTOR
1	1
2	1.4
3	1.7
4	2
5	2.2
7	2.6
10	3.1
20	4.4
30	5.4
40	6.3
50	7
60	7.7
75	8.6
100	10
125	11
150	12
175	13
200	14
225	15
250	16

SEE VALVE BODY TABLES FOR C_v RATINGS AVAILABLE

$$Q = C_v W_v$$

Q = Gallons Per Minute
C_v = Valve Coefficient
W_v = Water Factor.

OBTAIN WATER CAPACITY

By multiplying C_v by the W_v shown for PSID.

OBTAIN VALVE C_v REQUIRED

By dividing GPM required by the W_v listed at PSID

*PSID is the inlet PSIG less the back PSI at the valve outlet produced by the resistance to flow downstream in the line.

STEAM USED TO HEAT WATER

TEMPERATURE RISE °F.	U.S. GALLONS OF WATER HEATED PER HOUR – For fuel oil, use half the lbs. per hour of steam listed.																	
	25	50	75	100	150	200	300	400	500	750	1000	1500	2000	3000	4000	5000	7500	10000
	POUNDS OF STEAM PER HOUR REQUIRED																	
10						17	25	33	42	63	83	120	167	250	330	420	620	830
20					25	33	50	67	83	125	167	250	330	500	670	830	1250	1670
30				25	37	50	75	100	125	190	250	370	500	750	1000	1250	1900	2500
40			25	33	50	66	100	130	170	250	330	500	660	1000	1330	1700	2500	3300
50		21	31	42	63	84	125	170	210	310	420	630	840	1250	1680	2100	3100	4200
60	12	25	37	50	75	100	150	200	250	370	500	750	1000	1500	2000	2500	3700	5000
80	16	33	50	67	100	130	200	270	330	500	670	1000	1340	2000	2700	3300	5000	6700
100	21	42	63	83	120	170	250	330	420	630	830	1250	1700	2500	3300	4200	6300	8300
120	25	50	75	100	150	200	300	400	500	750	1000	1500	2000	3000	4000	5000	7500	10000
140	29	58	88	117	175	230	350	470	580	880	1170	1750	2340	3500	4700	5800	8800	11700
160	33	66	100	133	200	270	400	530	660	1000	1330	2000	2700	4000	5300	6600	10000	13300
180	37	75	113	150	225	300	450	600	750	1125	1500	2200	3050	4500	5950	7500	11300	14950
200	42	84	126	165	250	330	500	660	840	1260	1660	2500	3400	5000	6600	8300	12600	16600

Heat content of each pound of steam is approximately 950 BTU/LB.

61

Trerice

CAPACITY TABLES
STEAM FACTOR Sv

STEAM PRESSURE PSIG		VALVE STEAM FACTOR
Valve Inlet	*Back PSI At Valve Outlet	Sv
0	Vac.	23
2	1	12
	0	17
	VAC	28
5	4	13
	2	22
	0	27
10	8	20
	5	31
	0	42
15	10	35
	5	47
	0	54
20	15	38
	10	51
	5	60
30	25	43
	20	59
	10	78
40	30	66
	20	89
	15	96
50	40	72
	30	98
	25	107
60	50	78
	40	107
	30	126
75	65	86
	50	131
	35	157
100	80	136
	65	173
	50	199
125	100	167
	80	216
	60	248
150	125	183
	100	248
	75	290
175	150	197
	120	280
	85	339
200	160	262
	130	333
	100	381
225	180	293
	140	384
	110	430
250	200	325
	150	435
	125	472

SEE VALVE BODY TABLES

FOR Cv RATINGS AVAILABLE

$$Q = C_v S_v$$

Q = Saturated steam in pounds per hour.

Cv = Valve coefficient.

Sv = Steam factor.

OBTAIN STEAM CAPACITY

By multiplying Cv by the Sv shown for valve pressures.

When steam required is known:

$$\frac{Q}{S_v} = C_v$$

OBTAIN VALVE Cv REQUIRED

By dividing pounds/hour required by the Sv listed at valve pressures.

*Back PSI at valve outlet is the pressure produced by the resistance to flow downstream in the line.

Flow does not increase at outlet pressures lower than lowest shown.

FOR SUPERHEATED STEAM CORRECT FACTOR AS FOLLOWS:

With 50°F. Superheat multiply by .96
With 100°F. Superheat multiply by .94
With 150°F. Superheat multiply by .90
With 200°F. Superheat multiply by .87
With 300°F. Superheat multiply by .80

FOR AIR CAPACITIES: Divide factor for the desired pressure reduction by 2.8 to obtain CUBIC FEET OF FREE AIR PER MINUTE at 60°F.

FOR GAS CAPACITIES: Divide factor for the desired pressure reduction by 2.8 times the square root of the specific gravity of the gas to obtain CUBIC FEET OF FREE GAS PER MINUTE at 60°F.

EFFECTIVE:
MAY 16, 1990

H. O. TRERICE CO.
MFR. OF TEMPERATURE/PRESSURE INSTRUMENTS & CONTROLS SINCE 1923

12950 W. EIGHT MILE RD. OAK PARK, MI 48237 PHONE: (313) 399-8000

PRICE LIST NO. 501-210

(APPLIES TO AMBI-REG BULLETIN NO. 501)

Please review specifications set forth in Bulletin No. 501 prior to placing order.

TERMS: 1% 10 Days, Net 30 Days, F.O.B. Factory **•MINIMUM ORDER: $100.00 NET•** **Subject to Change Without Notice**

EA01 Actuator $283.10
(ADD VALVE BODY PRICE BELOW)

BRONZE BODY – STAINLESS TRIM – SINGLE SEAT – DIRECT ACTING
(ADD THIS PRICE TO EA01 ACTUATOR ABOVE)

NPT	PORT	NUMBER	PRICE
½"	½"	164-0063.2A	$265.15
¾"	¾"	164-0064.2A	$289.85
1"	1"	164-0065.2A	$360.65
1¼"	1¼"	164-0066.2A	$447.15
1½"	1½"	164-0067.2A	$504.45
2"	2"	164-0068.2A	$559.50
½"	⅜"	164-0063.5A	$265.15
½"	¼"	164-0063.7A	$265.15
½"	3/16"	164-0063.9A	$265.15
½"	⅛"	164-0063.11A	$265.15

CAST STEEL BODY – STAINLESS TRIM – SINGLE SEATED – DIRECT ACTING
(ADD THIS PRICE TO EA01 ACTUATOR ABOVE)

NPT	PORT	NUMBER	PRICE
¾"	⅛"	164-0148.1A	$762.85
	3/16"	164-0148.2A	$762.85
	¼"	164-0148.3A	$762.85
	⅜"	164-0148.4A	$762.85
	½"	164-0156.1A	$762.85
	¾"	146-0153.1A	$762.85
1"	⅛"	146-0148.51A	$831.40
	3/16"	164-0148.52A	$831.40
	¼"	164-0148.53A	$831.40
	⅜"	164-0148.54A	$831.40
	½"	164-0154.1A	$831.40
	¾"	164-0155.1A	$831.40
	1"	164-0152.1A	$831.40

EFFECTIVE:
MAY 16, 1990

H. O. TRERICE CO.
MFR OF TEMPERATURE PRESSURE INSTRUMENTS & CONTROLS SINCE 1923

12950 W. EIGHT MILE RD. OAK PARK, MI 48237 PHONE: (313) 399-8000

SELF-CONTAINED TEMPERATURE REGULATORS

PRICE LIST NO. 150-210 (Applies to Catalog No. 150)

Please review specifications set forth in Catalog No. 150 prior to placing order.

TERMS: 1% 10 Days, Net 30 Days, F.O.B. Factory • MINIMUM ORDER: $100.00 NET • Prices Subject to Change Without Notice

HOW TO ORDER:

6	91000	AGS	¾"	95 – 190	°F	CS	8	B01	W04
QUANTITY	ACTUATOR MODEL NO.	VALVE CODE NO.	VALVE SIZE	TEMPERATURE RANGE	UNIT MEASURE	TUBING MATERIAL CODE NO.	TUBING LENGTH (FEET)	BULB NUMBER	UNION OR THERMOWELL NUMBER

ACTUATOR MODELS:

91000 & 91400

PAGE NO.	MODEL NO. 91000 COMPACT ACTUATOR
7	No. 91000 Compact Actuator, non-indicating with 8 ft. std. copper capillary tubing & union conn. ..... $314.60 Copper bulb (B01-H01) or plain conn. copper bulb (B05)
	MODEL NO. 91400 COMPACT ACTUATOR
	No. 91400 Compact Actuator, indicating with 8 ft. std. copper capillary tubing & union conn. ..... $387.60 Copper bulb (B01-H01) or plain conn. copper bulb (B05)

NOTE: Add valve body to above acutator price. For special capillary materials & wells see page 6 of price sheet.

COMPACT ACTUATOR VALVE BODIES — TWO WAY TYPE

Pg. 7	BRONZE BODY · SINGLE SEAT · SS TRIM					
SIZE		VALVE CODE NUMBER				PRICE
		STEM MOVES IN				
PORT NOMINAL	NPT CONN.	TO CLOSE Temp. Rise Heating · D.A.		TO OPEN Temp. Rise Cooling · R.A.		
⅛"	½"	AAS	REF. A02	BAS	REF. A03	$265.15
3/16"		ABS	A05	BBS	A06	$265.15
¼"		ACS	A08	BCS	A09	$265.15
⅜"		ADS	A11	BDS	A12	$265.15
½"		AES	A14	BES	A15	$265.15
¾"		AGS	A19	BGS	A22	$289.85
1"		AIS	A26	BIS	A30	$360.65
1¼"		AKS	A36	BKS	A41	$447.15
1½"		AMS	A47	BMS	A52	$504.45
2"		AOS	A58	BOS	A63	$559.50

105-5A Valve Packing Kit ..... $12.50 By Pass Hole $48.70

Pg. 8	BRONZE & CAST IRON* · DOUBLE SEAT · SS TRIM				
SIZE NPT CONN.	VALVE CODE NUMBER				PRICE
	STEM MOVES IN				
	TO CLOSE Temp. Rise Heating · D.A.		TO OPEN Temp. Rise Cooling · R.A.		
¾"	AHS	REF. A21	BHS	REF. A24	$312.35
1"	AJS	A29	BJS	A33	$382.00
1¼"	ALS	A39	BLS	A44	$484.25
1½"	ANS	A50	BNS	A55	$522.45
2"	APS	A61	BPS	A66	$586.45
2½"*	CRS	B73	DRS	B74	$849.70
3"*	CTS	B78	DTS	B79	$992.75

†Denotes bronze trim option.
*Cast iron — flanged ends.

CONSUMER PRICE LIST NO. 150-210

COMPACT ACTUATOR VALVE BODIES – TWO WAY TYPE (Continued)

Pg. 10	CAST STEEL BODY · SINGLE SEAT · SS TRIM			
SIZE		VALVE CODE NUMBER		PRICE
		STEM MOVES IN		
PORT NOMINAL	NPT CONN.	TO CLOSE Temp. Rise Heating · D.A.	TO OPEN Temp. Rise Cooling · R.A.	
1/8"	3/4"	C01	–	$762.85
3/16"		C02	–	$762.85
1/4"		C03	–	$762.85
3/8"		C04	–	$762.85
1/2"		C05	C15	$762.85
3/4"		C06	C16	$762.85
1/8"	1"	C51	–	$831.40
3/16"		C52	–	$831.40
1/4"		C53	–	$831.40
3/8"		C54	–	$831.40
1/2"		C55	C65	$831.40
3/4"		C56	C66	$831.40
1"		C57	C67	$831.40

Pg. 9	STAINLESS STEEL BODY · SINGLE SEAT · SS TRIM		
SIZE NPT CONN.	VALVE CODE NUMBER		PRICE
	STEM MOVES IN		
	TO CLOSE Temp. Rise Heating · D.A.	TO OPEN Temp. Rise Cooling · R.A.	
1"	D26	D30	$1336.95
1 1/2"	D47	D52	$1640.30
2"	D58	D63	$1747.05

COMPACT ACTUATOR VALVE BODIES – THREE WAY TYPE

Pg. 8	BRONZE BODY – BRONZE TRIM		
SIZE NPT CONN.	VALVE CODE NO.		PRICE
1/2"	IFA	REF. A18	$265.15
3/4"	IHA	A25	$312.35
1"	IJA	A34	$382.00
1 1/4"	ILA	A45	$484.25
1 1/2"	INA	A56	$522.45
2"	IPA	A67	$586.45

Pg. 9	STAINLESS STEEL BODY – SS TRIM	
SIZE NPT CONN.	VALVE CODE NO.	PRICE
1"	D34	$2016.70
1 1/2"	D56	$2422.25
2"	D67	$2584.05

RANGES (COMPACT ACTUATORS):

Catalog Page No.	TEMPERATURE RANGES							
	COMPACT ACTUATORS 91000 & 91400	NOMINAL RANGES AVAILABLE		RECOMMENDED WORKING SPAN: HEATING (D.A.) & COOLING (R.A.) ALL SINGLE SEAT (HGT.) ALL THREE WAY VALVES		RECOMMENDED WORKING SPAN: COOLING (R.A.) WITH SINGLE SEAT ONLY		DUAL SCALE DIAL INDICATORS
		°F	°C	°F	°C	°F	°C	°F & °C
12	Thru 3" Valve Sizes. (3 Way Valves up thru 2" size)	*20 to 70	–10 to 20	40 to 65	5 to 20	N.A.	N.A.	30 to 115 & 0 to 45
		*40 to 90	5 to 30	65 to 85	20 to 30	N.A.	N.A.	50 to 140 & 10 to 60
		30 to 115	0 to 45	85 to 110	30 to 45	50 to 80	10 to 25	30 to 115 & 0 to 45
		50 to 140	10 to 60	110 to 135	45 to 60	80 to 105	25 to 45	50 to 140 & 10 to 60
		75 to 165	25 to 70	135 to 160	60 to 70	105 to 130	40 to 50	75 to 165 & 25 to 70
		95 to 190	35 to 85	160 to 185	70 to 85	130 to 155	50 to 65	95 to 190 & 35 to 85
		125 to 215	55 to 100	185 to 210	85 to 100	155 to 180	65 to 80	125 to 215 & 55 to 105
		140 to 240	60 to 115	210 to 235	100 to 115	180 to 205	80 to 95	140 to 240 & 60 to 115
		155 to 250	70 to 120	210 to 245	100 to 120	200 to 215	95 to 100	155 to 250 & 65 to 120
		200 to 280	95 to 135	245 to 275	120 to 135	215 to 245	100 to 120	200 to 280 & 95 to 135
		225 to 315	110 to 155	275 to 310	135 to 155	245 to 280	120 to 140	225 to 315 & 110 to 155
		255 to 370	125 to 185	305 to 365	155 to 185	275 to 335	135 to 165	255 to 370 & 125 to 185
		295 to 420	145 to 215	365 to 415	185 to 215	335 to 385	165 to 195	295 to 420 & 145 to 215
		310 to 440	155 to 225	415 to 435	215 to 225	385 to 405	195 to 205	310 to 440 & 155 to 225

*These ranges not recommended on single seat valves.

Select appropriate range from above table by locating recommended working span suitable for desired temperature, then: ORDER BY NORMAL RANGE associated with that working span.

91000L

PG. NO.	MODEL NO. 91000L LARGE ACTUATOR
11	No. 91000L large actuator, non-indicating with 8 ft. std. copper capillary tubing & union conn. ..... price $1235.85 Copper bulb (B01-H01) or plain conn. bulb (B05)

NOTE: Add valve body to above actuator price. For special capillary materials & wells see page 6 of price sheet.

LARGE ACTUATOR VALVE BODIES - TWO WAY TYPE

PG. 11	CAST IRON BODY – DOUBLE SEAT – SS TRIM				
SIZE NPT CONN.	VALVE CODE NUMBER STEM MOVES IN TO CLOSE Temp. Rise Heating - D.A.		TO OPEN Temp. Rise Cooling - R.A.		PRICE
4"	CVS	REF. B83	DVS	REF. B84	$1265.45
5"	CXS	B88	DXS	B89	$1527.80
6"	CZS	B93	DZS	B94	$1929.00

LARGE ACTUATOR VALVE BODIES – THREE WAY TYPE

Pg. 11	CAST IRON – BRONZE TRIM		
SIZE NPT CONN.	VALVE CODE NUMBER		PRICE
2½"	JRA	REF. B75	$1162.80
3"	JTA	B80	$1235.85
4"	JVA	B85	$1584.15

RANGES (LARGE ACTUATOR):

Catalog Page No.	TEMPERATURE RANGES							
		NOMINAL RANGES		RECOMMENDED WORKING SPAN				DIAL INDICATORS
				HEATING (D.A.)		COOLING (R.A.)		
		°F	°C	°F	°C	°F	°C	
12	LARGE ACTUATOR 91000L Over 3" Size (3 Way Valves over 2" size)	40 to 75	5 to 25	60 to 75	15 to 25	50 to 65	10 to 20	NOT AVAILABLE
		60 to 100	15 to 35	75 to 100	25 to 35	65 to 90	20 to 30	
		80 to 120	25 to 50	100 to 120	35 to 50	90 to 110	30 to 45	
		100 to 140	40 to 60	120 to 140	50 to 60	110 to 130	45 to 55	
		125 to 165	55 to 75	140 to 165	60 to 75	130 to 155	55 to 70	
		140 to 180	60 to 80	165 to 180	75 to 80	155 to 170	70 to 75	
		155 to 190	70 to 90	180 to 190	80 to 90	170 to 185	75 to 85	
		180 to 215	85 to 100	190 to 215	90 to 100	185 to 210	85 to 95	
		200 to 240	95 to 115	215 to 240	100 to 115	210 to 230	95 to 110	
		220 to 255	105 to 125	240 to 255	115 to 125	230 to 250	110 to 120	
		240 to 285	115 to 140	255 to 285	125 to 140	250 to 275	120 to 135	
		260 to 310	130 to 155	285 to 310	140 to 155	275 to 300	135 to 150	

Select appropriate range from above table by locating recommended working span suitable for desired control temperature, then: ORDER BY NOMINAL RANGE associated with that working span.

91000

PG. NO.	MODEL NO. 91600 SAFETY ACTUATOR
16	No. 91600 safety actuator, non-indicating with 8 ft. std. copper capillary tubing & union conn. ..... $781.10 Copper bulb (B01-H01) or plain conn. copper bulb (B05)

NOTE: Add valve body to above actuator price. For special capillary materials & wells, see page 6 of price sheet.

SAFETY ACTUATOR VALVE BODIES – TWO WAY TYPE

Pg. 17	BRONZE BODY -- DOUBLE SEAT – SS TRIM					
SIZE		VALVE CODE NUMBER				PRICE
		STEM MOVES IN				
PORT NOMINAL	NPT CONN.	TO CLOSE Temp. Rise Heating · D.A.		TO OPRN Temp. Rise Cooling · R.A.		
1/8"	1/2"†	AAS	A02	BAS	A03	$265.15
3/16"		ABS	A05	BBS	A06	$265.15
1/4"		ACS	A08	BCS	A09	$265.15
3/8"		ADS	A11	BDS	A12	$265.15
1/2"†		AES	A14	BES	A15	$265.15
3/4"		AHS	A21	BHS	A24	$312.35
1"		AJS	A29	BJS	A33	$382.00
1 1/4"		ALS	A39	BLS	A44	$484.25
1 1/2"		ANS	A50	BNS	A55	$522.45
2"		APS	A61	BPS	A66	$586.45

†Denotes single seated.

Pg. 17	CAST STEEL BODY – SINGLE SEAT – SS TRIM			
SIZE		VALVE CODE NUMBER		PRICE
		STEM MOVES IN		
PORT NOMINAL	NPT CONN.	TO CLOSE Temp. Rise Heating · D.A.	TO OPEN Temp. Rise Cooling · R.A.	
1/8"	3/4"	C01	– –	$762.85
3/16"		C02	– –	$762.85
1/4"		C03	– –	$762.85
3/8"		C04	– –	$762.85
1/2"		C05	C15	$762.85
3/4"		C06	C16	$762.85
1/8"	1"	C51	– –	$831.40
3/16"		C52	– –	$831.40
1/4"		C53	– –	$831.40
3/8"		C54	– –	$831.40
1/2"		C55	C65	$831.40
3/4"		C56	C66	$831.40
1"		C57	C67	$831.40

RANGES (SAFETY ACTUATOR):

Catalog Page No.	TEMPERATURE RANGES	
	FAHRENHEIT	CELSIUS
16	35 to 60	0 to 15
	55 to 80	15 to 25
	65 to 90	20 to 30
	80 to 110	25 to 40
	90 to 115	30 to 45
	110 to 140	40 to 60
	125 to 155	55 to 65
	140 to 175	60 to 80
	170 to 195	80 to 90
	190 to 210	85 to 100
	205 to 225	95 to 105
	215 to 250	100 to 120
	230 to 265	110 to 130
	245 to 280	120 to 135
	270 to 300	135 to 150

13

91000XT & 91000XLT

Pg. No.	NO. 91000XT OR XLT TANK THERMOSTAT
19	No. 91000XT or XLT tank thermostat with ¾" valve body, non-indicating, 8 ft. standard copper capillary tubing and union connection, copper bulb (complete unit) $193.25

1" NPT valve size available on above models, add ..... $16.85 list extra.

	THERMOWELLS FOR TANK THERMOSTAT (CADMIUM PLATED STEEL)
19	No. 138-0156 1" NPT, 8½" insertion $22.45
	No. 138-0197A 1" NPT, 20" insertion $61.80

Catalog Page No.	TEMPERATURE RANGES							
	Nominal Range (°F)	Suggested Working range (°F)	Thermowell - 1" NPT Part No.	Bulb Length	Nominal Range (°F)	Suggested Working range (°F)	Thermowell - 1" NPT Part No.	Bulb Length
150-19	40 - 90	60 - 90	138-0156	10"	110 - 190	160 - 190	138-0156	8"
	45 - 115	85 - 115	138-0197A	20"	125 - 215	180 - 210	138-0156	8"
	65 - 140	110 - 140	138-0197A	20"	200 - 280	250 - 280	138-0156	8"
	85 - 115	85 - 115	138-0156	8"	225 - 315	280 - 310	138-0156	8"
	80 - 140	110 - 140	138-0156	8"	310 - 365	310 - 365	138-0156	8"
	110 - 140	110 - 140	138-0156	8"	295 - 420	360 - 420	138-0156	8"
	130 - 160	130 - 160	138-0156	8"				

Select appropriate range from above table by locating suggested working range suitable for desired control temperature, then: ORDER BY THE NOMINAL RANGE associated with that working range.

SPECIAL & EXTRA CONNECTING TUBING:

Catalog Page No.	TUBING MATERIAL CODE	MATERIAL	Price Per 4 ft. Increment*
150-12	CS	3/16" O.D. seamless copper tubing	$31.45
	SS	3/16" O.D. type 316 stainless steel tubing	$50.55
	TC	5/16" O.D. teflon covering over seamless copper tubing (max. temp. 400°F (204°C)	$50.55
	AB	5/16" O.D. brass spiral armor	$31.45
	AS	5/16" O.D. stainless steel spiral armor	$40.45

*Add the above price for each 4 ft. increment required to the next shorter standard length. For spiral armor over the required tubing, add the price listed for each 4 ft. increment over the entire capillary length.

TEMPERATURE REGULATOR BULB & THERMOWELL OPTIONS:

STANDARD SERIES 91000 TEMPERATURE REGULATOR BULBS

TYPE OF CONNECTION	BULB MATERIAL	TUBING MATERIAL	Tubing Length 8 Feet Bulb No.	Add To Actuator List Price	Tubing Length 12 Feet Bulb No.	Add To Actuator List Price	Tubing Length 16 Feet Bulb No.	Add To Actuator List Price	Tubing Length 20 Feet Bulb No.	Add To Actuator List Price
PLAIN CONNECTION Without pipe thread	Copper Bulb	Copper	B05	No Extra	B15	$31.45	B25	$62.90	B35	$94.35
	*Teflon covered bulb & tubing	Teflon over copper	B08	$258.40	B18	$308.95	B28	$359.50	B38	$410.10
	Stainless type 316 bulb	316 St. steel	B06	$123.60	B16	$174.15	B26	$224.70	B36	$275.25
ADJUSTABLE CONN.	Copper bulb & brass fittings	Copper	B02	$50.55	B12	$82.00	B22	$113.45	B32	$144.95
	316 Stainless bulb & fittings	316 St. steel	B04	$188.75	B14	$239.30	B24	$289.85	B34	$340.40
UNION OR WELL CONNECTION	*Copper bulb	Copper	B01	No Extra	B11	$31.40	B21	$62.90	B31	$94.35
		316 St. Stl.	B09	$38.20	B19	$88.75	B29	$139.30	B39	$189.85
Includes only coupling nut. Select appropriate union or well from chart below.	316 Stainless bulb	Copper	B03	$85.40	B13	$116.85	B23	$148.30	B33	$179.75
		316 St. Stl.	B10	$123.60	B20	$174.15	B30	$224.70	B40	$275.25

*Maximum temperature 400°F (204°C).

UNION AND THERMOWELL SELECTION CHART**

TYPE	MATERIAL	8 Feet Fitting No.	Price	12 Feet Fitting No.	Price	16 Feet Fitting No.	Price	20 Feet Fitting No.	Price
UNION HUB BUSHING	Brass	H01	No Extra	H01	No Extra	H01	No Extra	H01	No Extra
	316 Stainless Steel	H04	$31.45	H04	$31.45	H04	$31.45	H04	$31.45
WELL	Brass	W01	$61.80	W11	$61.80	W21	$61.80	W31	$89.90
	Steel	W02	$92.15	W12	$92.15	W22	$92.15	W32	$120.20
	316 Stainless Steel	W04	$140.45	W14	$140.45	W24	$140.45	W34	$168.55

**For 91000L and 91600 actuators only – multiply above union and thermowell prices by x 2.
For values of Ⓐ, Ⓓ, Ⓚ & Ⓤ; see dimension table, catalog pgs. 150-14 or 150-16.

ENERGY-SAVING NON-ELECTRIC TEMPERATURE CONTROL for LOW PRESSURE STEAM and HOT WATER SYSTEMS

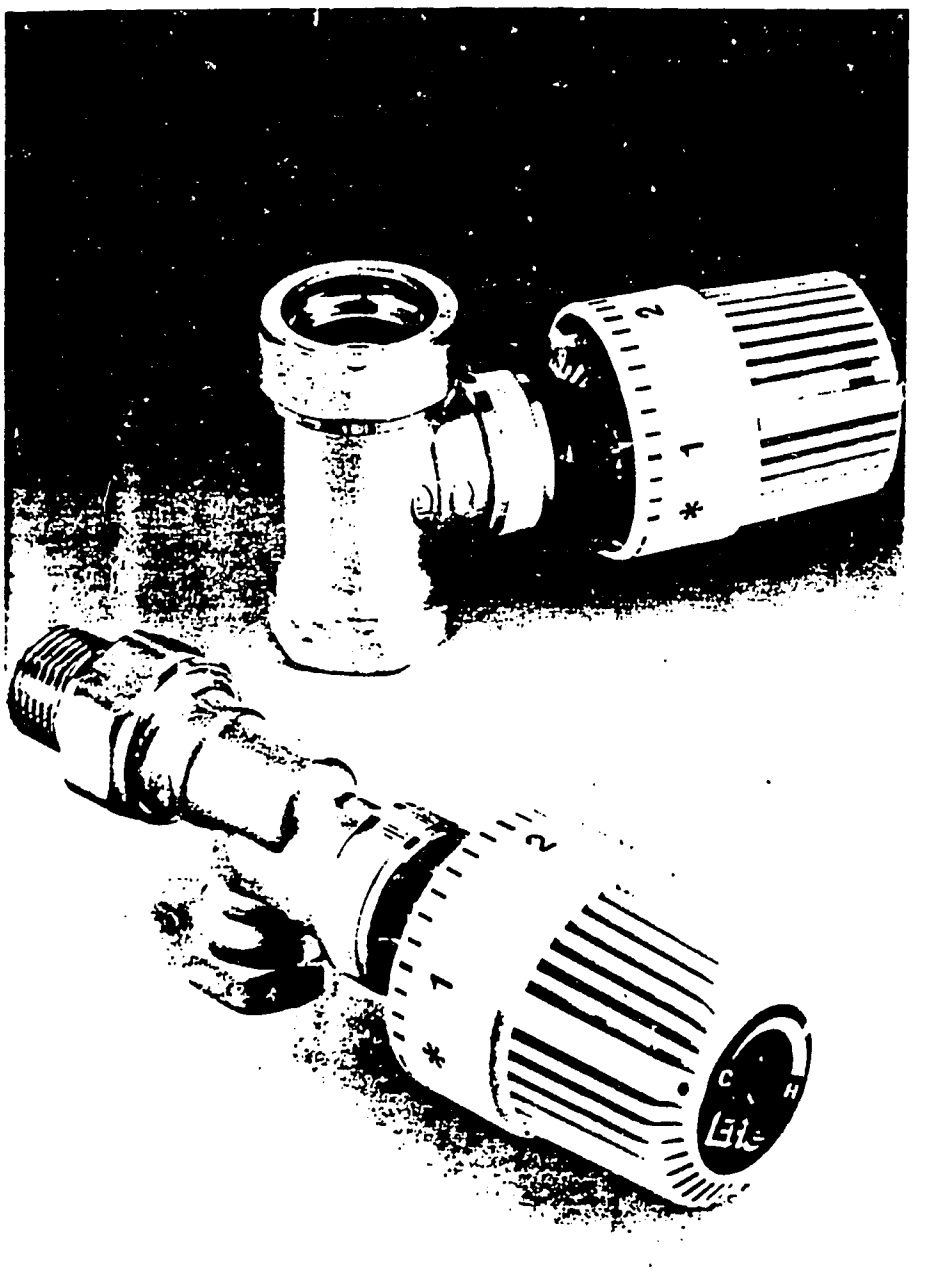

Erie's non-electric valves are the most simple and cost-effective means of automatic temperature control on the market. Used extensively throughout Europe for years to reduce soaring heating costs, this type of fully automatic valve is ideal for retrofit and new installation in apartments, office buildings, schools, hotels, hospitals, factories and govenment buildings. Overheating is eliminated, and each heating unit is balanced according to local demand.

Totally self-contained, Erie's valves require no electrical connections. The thermostatic head of the control contains a heat-sensitive liquid that expands as the temperature rises, operating the valve to shut off the flow of water or steam through the radiator. The valves are easily installed directly into individual freestanding radiators, convectors and baseboard heaters — usually without changes to existing piping. Installation costs are reduced because valves can be completely installed by plumber or steamfitter alone.

OTHER FEATURES

- Precise temperature control — 1° F hysteresis.
- Micrometer-type adjustment provides even room temperature for maximum comfort.
- Set points can be locked and limited.
- Eliminates energy waste from open windows.
- Adjustable day and night indicator settings.
- 5-year limited warranty.
- One-trade installation.
- Direct mount or remote sensor thermostats.
- Threaded connections — ½" or ¾" NPT sizes.
- Fully automatic, non-electric operation.
- Optional tamper-proof locking collar protects valve from unauthorized adjustment or removal of control.

ERIE CONTROLS

SPECIFICATIONS

Applications: 250° F (120° C) Hot Water and 10 PSI Steam

Temperature Range: 48 - 81° F (9 - 27° C)

Maximum System Pressure: 200 PSI (Water) 10 PSI (Steam)

Maximum Working Temperature of Liquid-Filled Thermostatic Heads: The thermostatic head may not be exposed to a higher temperature than 122° F (50° C) or lower than −4° F (−20° C).

Approximate Temperatures for Numerical Settings of 573 Thermostatic Heads:

△	•	1	2	3	4	5
37° F	48°	52°	61°	70°	75°	81° F

Valve Body:
- Forged Brass — Nickel Plated
- Stainless Steel Stem
- Stainless Steel Spring
- Overcoated Disc with Back Seat
- Replaceable "O" Ring Gland without Draining System

HOW TO ORDER

Erie's thermostatic radiator valves consist of direct or remote sensor thermostats coupled with the appropriate valve. Choose from Erie's selection designed to suit virtually any hydronic heating system. Order each item by part number.

VALVE BODIES

571 ANGLE

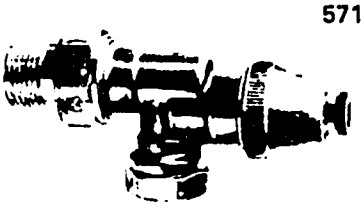

Number	C_V	Size
571A6	1.2	1/2"
571A7	2.4	3/4"

572 STRAIGHT

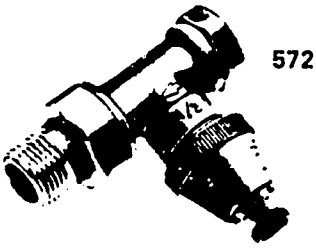

Number	C_V	Size
572A6	1.2	1/2"
572A7	2.4	3/4"

THERMOSTAT

DIRECT MOUNT, SELF CONTAINED

Number	Temp. — Range
573A6	48 - 81° F (9 - 27° C)

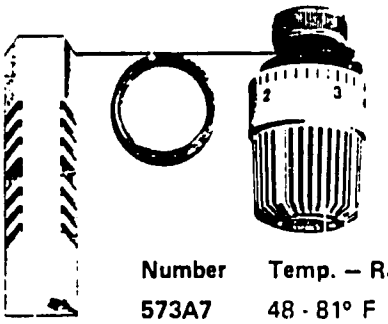

REMOTE SENSOR

Number	Temp. — Range	Capillary Length
573A7	48 - 81° F (9 - 27° C)	6 feet (2m)

TAMPER-PROOF LOCKING COLLAR

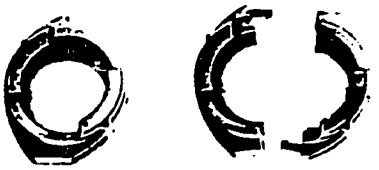

574A206

VALVE CARTRIDGE

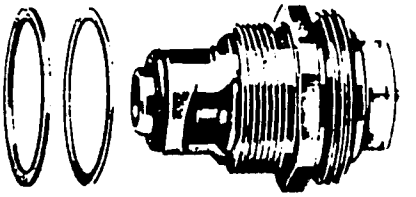

"O" Ring Gland (Can be replaced without draining system) **574A205**

Complete Cartridge with "O" Ring Gland **574A204**

ERIE CONTROLS

ERIE MANUFACTURING COMPANY
U.S.A.: 4000 South 13th Street/Milwaukee, WI 53221/(414) 483-0524/800-558-3916/Telex: 2-6867/Fax: (414) 483-6610
Canada: P.O. Box 880/Stouffville, Ontario LOH 1LO (416) 640-2363/Telex: 06-986645
Belgium: Erie Controls Europe, N.V./Industriepark Wolfstee/B-2410 Herentals, Belgium/011-32-14-214096/Telex: 84633186

Printed in U.S.A. TRV-2, 12/87 © Copyright, ERIE CONTROLS

ERIE CONTROLS

NON-ELECTRIC THERMOSTATIC VALVES

SPECIFICATIONS

Applications: 250° F (120° C) Hot Water and 10 PSI Steam

Temperature Range: 48 - 81° F (9 - 27° C)

Maximum System Pressure: 200 PSI (Water) 10 PSI (Steam)

Maximum Working Temperature of Liquid-Filled Thermostatic Heads: The thermostatic head may not be exposed to a higher temperature than 122° F (50° C) or lower than −4° F (−20° C).

Approximate Temperatures for Numerical Settings of 573 Thermostatic Heads:

△	•	1	2	3	4	5
37° F	48°	52°	61°	70°	75°	81° F

Valve Body:
- Forged Brass – Nickel Plated
- Stainless Steel Stem
- Stainless Steel Spring
- Overcoated Disc with Back Seat
- Replaceable "O" Ring Gland without Draining System

VALVE BODIES

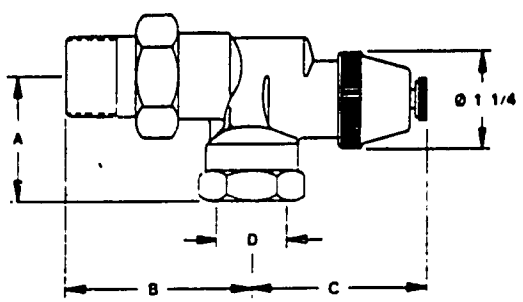

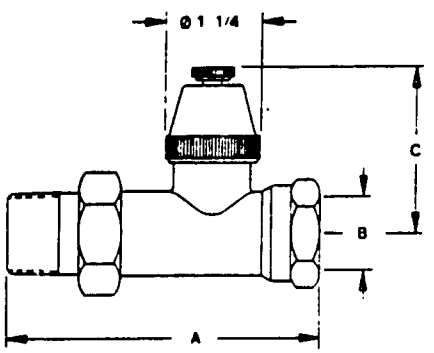

Number	Size	A	B	C	D
571A6	1/2 NPT	1 1/2	2 1/8	2 3/8	1/2 NPT
571A7	3/4 NPT	1 5/8	2 1/2	2 7/16	3/4 NPT

Number	Size	A	B	C
572A6	1/2 NPT	3 3/4	1/2 NPT	2 1/4
572A7	3/4 NPT	4 1/8	3/4 NPT	2 1/4

FOR OVERALL HEIGHT WITH HEAD FROM CENTER LINE, ADD 2-1/2" TO "C" DIMENSION.

THERMOSTAT

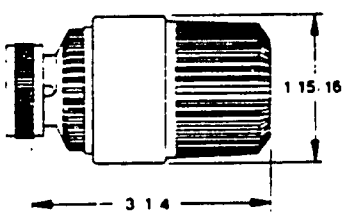

573A6

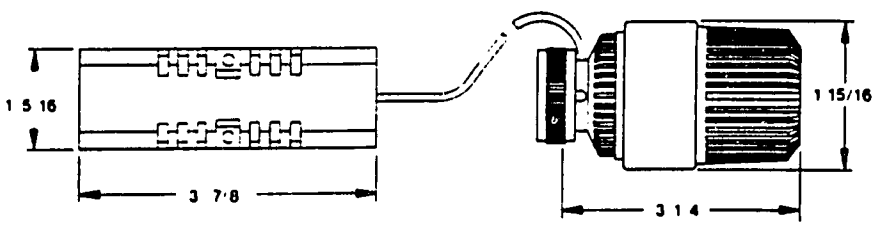

573A7

Capillary Length – 6 feet (2m)

ERIE MANUFACTURING COMPANY
U.S.A.: 4000 South 13th Street/Milwaukee, WI 53221/(414) 483-0524/800-558-3916/Telex: 2-6867/Fax: (414) 483-6610
Canada: P.O. Box 880/Stouffville, Ontario LOH 1LO (416) 640-2363/Telex: 06-986645
Belgium: Erie Controls Europe, N.V./Industriepark Wolfstee/B-2410 Herentals, Belgium/011-32-14-214096/Telex: 84633186

78

NON-ELECTRIC THERMOSTATIC VALVES

- Self-contained, non-electric thermostatic valves for individual room temperature control.
- Hot water heating systems or steam heating to 10 psi.
- Angle or straight-thru bodies.
- 1/2" and 3/4" NPT.
- Direct mount and remote bulb.
- Can be set to high/low limit or fixed temperature.
- Temperature range 48°–81° F.
- NPT female inlet/male union outlet.
- Improve comfort and fuel economy.
- Freeze protection.
- No electricity required.
- Five year limited warranty.

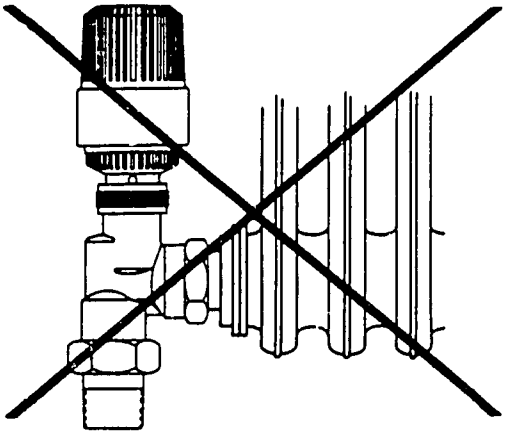

(NOT RECOMMENDED)

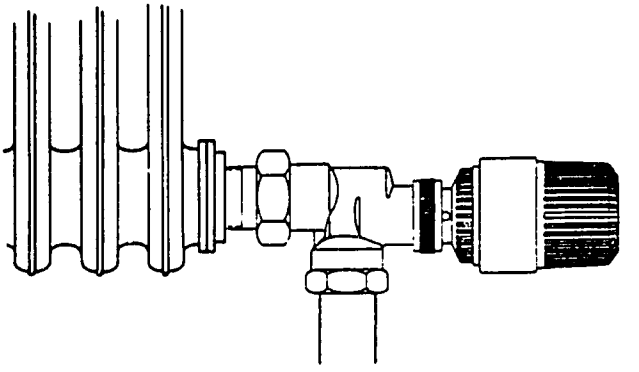

– CAUTION –
DO NOT MOUNT IN A VERTICAL POSITION. Mount horizontal or use remote bulb thermostat.

PRESSURE DROP GRAPH

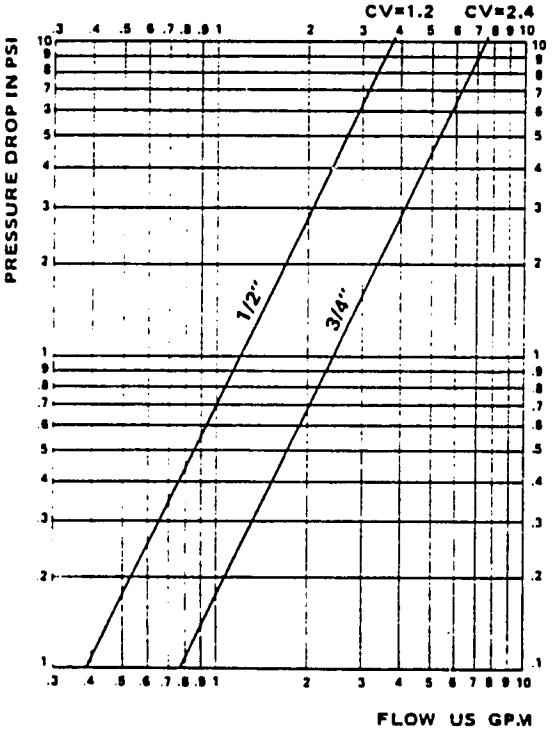

PRESSURE DROP ACROSS VALVE

(Based on fully open valve)

	PSI		FEET OF WATER	
GPM	1/2"	3/4"	1/2"	3/4"
1	.7	.2	1.6	.5
1.5	1.6	.4	3.7	.9
2	2.8	.7	6.5	1.6
2.5	4.3	1.0	9.9	2.3
3	6.2	1.6	14.3	3.7
4	11.0	2.8	25.4	6.4

ERIE CONTROLS

ERIE MANUFACTURING COMPANY
U.S.A.: 4000 South 13th Street/Milwaukee, WI 53221/(414) 483-0524/800-558-3916/Telex: 2-6867/Fax: (414) 483-6610
Canada: P.O. Box 880/Stouffville, Ontario LOH 1LO (416) 640-2363/Telex: 06-986645
Belgium: Erie Controls Europe, N.V./Industriepark Wolfstee/B-2410 Herentals, Belgium/011-32-14-214096/Telex: 84633186

Printed in U.S.A. TRV-3, 1/85 © Copyright, ERIE CONTROLS

BRAUKMANN Thermostatic Zone Valves

Non-electric Type
For both Hot Water and Steam

VT 110
VT 105

TYPICAL SPECIFICATION FOR VT 110/V 105

Braukmann Thermostatic Radiator Valve VT 110 or VT 105 for hot water and steam, angle or straightway type for max. 248°F (120°C). 14 PSI steam or 150 PSI hot water and max. 40 ft. water column differential pressure.

Body of brass, nickel-plated disc, seal and 1 O-ring for valve. 2 O-rings for spindle packing — resistance to 300°F (150°C). The upper spindle packing is renewable without draining the heating system. Valve opening spring outside of water or steam-filled space, supplied with protective handle cap for manual operating.

Cover plate C 110 should be used for T 111 controls installed in baseboard radiators to cover the gap made during the installation.

Thermostat Control (T 111) made of scratch-resisting plastic material of neutral pearl-white and light-grey color with low thermal conductivity. Highly sensitive thermostat with excess temperature safety device. Range of regulation: +48 to +89°F (+8° to +26°C). The Thermostat should be completely closed without O-ring or other packings.

TYPICAL SPECIFICATION FOR VT 110 F

VT 110 F for hot water and steam, angle or straightway type for maximum 248°F (120°C). 14 PSI steam or 150 PSI hot water and maximum 40 ft water column differential pressure.

Body of brass, nickel-plated, disc, seal and 1 O-ring for valve. 2 O-rings for spindle packing — resistant to 300°F (150°C) The upper spindle packing is renewable without draining the heating system. Valve opening spring outside of water or steam-filled space, supplied with protective handle cap for manual operating.

Thermostat Control T 111 F made of scratch-resistant plastic material of neutral pearl-white and light-grey color with low thermal conductivity.

Highly sensitive thermostat with excess safety device. Range of regulation between +48 and +95°F (+9° and (+28°C). Capillary tube 6'8" long. Bulb guard G 110 should be used when deemed necessary. The guard is made of aluminum, primed ready to paint.

TYPICAL SPECIFICATION FOR VT 110 Z

VT 110 Z for hot water and steam, angle or straightway type for maximum 248°F (120°C). 14 PSI steam or 150 PSI hot water and maximum 40 ft water column differential pressure.

Body of brass, nickel-plated, disc, seal and 1 O-ring for valve. 2 O-rings for spindle packing — resistance to 300°F (150°C) The upper spindle packing is renewable without draining the heating system Valve opening spring outside of water or steam-filled space, supplied with protective handle cap for manual operating.

Thermostat Control T 111 Z for convectors, baseboards and radiators. Valve connector and remote control unit made of highly polished scratch-resistant plastic material. Range of regulating: +48 to +95°F (+9° to +28°C).

Capillary tube 6'8" long.

TYPICAL INSTALLATION FOR THE BRAUKMANN THERMOSTATIC RADIATOR VALVES

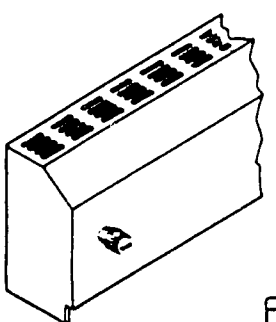

BASEBOARD

Braukmann Thermostatic Radiator Valves VT-110 are easily installed in baseboard radiation. The valve body is installed directly in the line and the thermostat head is mounted through the front cover for ease of installation and operation. Types VT-110-F and VT-110-Z may also be applied if desired.

FIN TUBE COMMERCIAL RADIATOR

Braukmann Valve type VT-110-F sensing bulb is mounted underneath the radiation, with the thermostat installed inside the valve enclosure or access door.

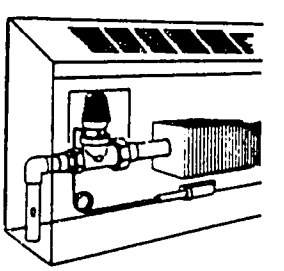

CONVECTOR

Braukmann Thermostatic Radiator Valve VT-110-Z with remote control thermostat is installed with the valve body inside the convector unit. The remote thermostat is mounted on the wall. The capillary tube may be installed inside the wall.

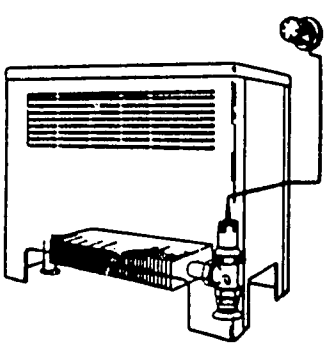

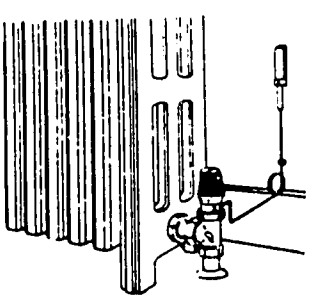

FREE STANDING RADIATOR

Braukmann Thermostatic Radiator Valve type VT-110-F is readily installed on existing cast iron radiators for either hot water or steam systems. The sensing bulb should be located away from the radiation to assure accurate reading of the thermostat. The illustration shows a typical hot water installation.

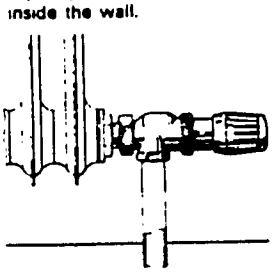

FREE STANDING RADIATOR

Braukmann Thermostatiac Radiator Valve Type VT 105 is readily installed on existing cast iron radiators for either hot water or steam systems.

The illustration shows a typical installation, but of course the connection could also be at the top of the radiator and if necessary with T 111 F or T 111 Z Controls.

Alterations without prior notice.

Printed in U.S.A.

BRAUKMANN
BRAUKMANN CONTROLS CORPORATION
56 Harvester Avenue Batavia, New York 14020

80

BRAUKMANN Thermostatic Zone Valves

Non-electric Type
For both Hot Water and Steam

VT 110
VT 105

BRAUKMANN'S ALL PURPOSE THERMOSTATIC RADIATOR VALVE FOR BOTH HOT WATER AND STEAM

Sizes 1/2" - 1¼" angle and straight, with thread or sweat connections. 3 styles — with direct control VT 110, VT 105, remote control VT 110 F or adjustable remote control VT 110 Z.

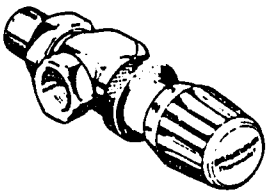

VT 105 Horizontal Angle Type

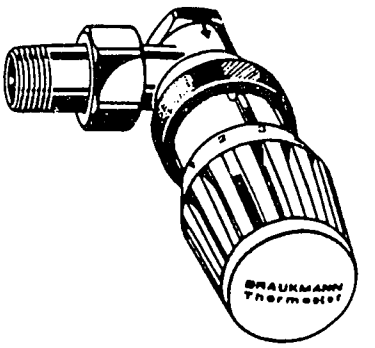

VT 110 Angle Type

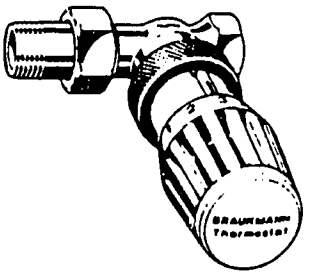

VT 110 Straightway Type

APPLICATION

Braukmann Non-Electric Thermostatic Radiator Valves are designed for both hot water and steam in same valve and are completely self-contained and require only one trade installation. This modulating valve measures and controls area temperature with an accuracy of appr. ± 1°F and is virtually trouble-free. The Braukmann radiator valves make it possible to control each room temperature individually, eliminates having to open windows to control comfort and in addition will most likely reduce your fuel bills by as much as 20% or more.

It is interesting to note that we at Braukmann have made the utmost use of modern technology and materials, incorporating them in our valve seat disc.

The disc compound is the most important feature of this valve. It is of high temperature resistant material and approved for use with steam up to 248°F (120°C) with a further built-in safety range, therefore eliminating the need for a separate valve to handle this medium.

We prefer elastic material against the metal seating rather than metal. This allows a tight shut-off.

The Braukmann valve may be applied to all types of heating units — baseboard, convectors, free standing radiators — and may control a loop, a unit or a zone. It may be designed into a new or an existing hot water or steam system. The proper valve size for each unit, loop or zone may be selected by using the details on valve size, shape and the performance values included in this brochure.

SIZES AND CONNECTIONS:

1/2", 3/4", 1" and 1-1/4" size in angle and straightway type

Inlet — female thread or solder adaptor

Outlet — male thread union or solder union connection

CONSTRUCTION:

Valve body (V 110 and V 105) made of stamped brass or brass casting, nickel plated, valve cone seal and O-rings for valve case and spindle packing resist temperatures of up to 300°F (150°C), the upper spindle packing can be replaced during plant operation without draining the heating system. Valve opening spring is located outside the water filled space. Supplied with protective cap, which can be used for manual opening or closing of valve during installation.

Thermostatic Control (T 111) made of highly polished, mar-proof plastic material of a neutral pearl-white and light-grey tint with a low thermal conductivity. Highly sensitive thermostat with excess temperature safety device. Setting control with guide mark numbers. Range of regulation 46 — 89°F (8°C — 26°C).

Thermostatic Control with outside sensing bulb (T 111F) made of highly polished mar-proof plastic material of a neutral pearl-white and light-grey tint with a low thermal conductivity. Highly sensitive thermostat with excess temperature safety device. Setting control with guide mark numbers. The range of regulation between the mark * and the guide mark number 5 can be selected freely by changing the position of the setting control to any point between +48 and +95°F (9° and 28°C). The length of the capillary tube is 6'8", otherwise the execution is similar to that of T 111, suitable for all types and sizes.

Bulb guard G 110 should be used when deemed necessary. The guard is made of aluminum, primed ready to paint.

Thermostatic Control with remote adjustment (T 111 Z), for enclosed convectors and baseboard radiators. Valve connector and remote control unit made of highly polished, mar-proof plastic material of a neutral pearl-white and light-grey tint. The regulating range between the mark * and guide mark 5 can be selected freely by changing the position of the setting control to any point between +48 and +95°F (9° and 28°C). The length of the capillary tube is 6'8", otherwise the execution is similar to that of T 111, suitable for all types and sizes.

Alterations without prior notice

Printed in U.S.A.

BRAUKMANN
BRAUKMANN CONTROLS CORPORATION
36 Harvester Avenue Batavia, New York 14020

BRAUKMANN Thermostatic Zone Valves

Non-electric Type
For both Hot Water and Steam

VT 110
VT 105

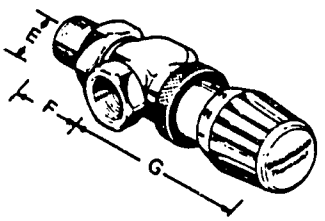

type VT 105
horizontal angle type

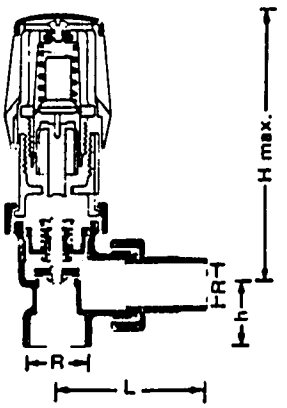

type VT 110
angle type

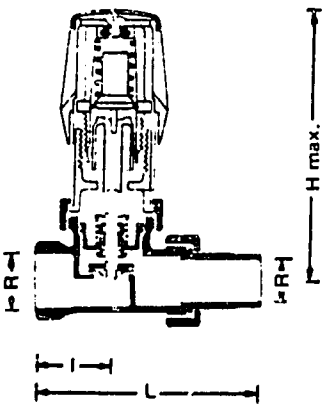

type VT 110
straightway type

C110

G110

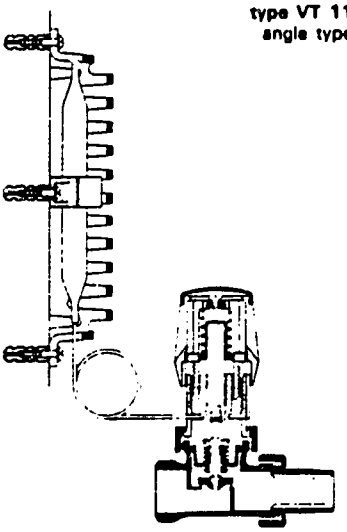

type VT 110 F
with remote sensor
as angle or straightway type
(guard extra)

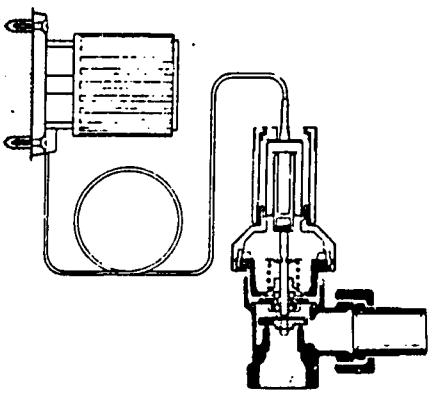

type VT 110 Z
with remote adjustment wall mounted
as angle or straightway type

PRESSURE AND TEMPERATURE RATINGS:

Maximum initial flow temperature	248°F (120°C)
Working pressure maximum (hot water)	150 PSI.
Working pressure maximum (saturated steam)	14 PSI.
Differential pressure maximum	40 ft water column (17 PSI)

The differential pressure is limited to 17 PSI mainly because of increasing noise above this level. (Ask for maximum differential pressure.)

However, in areas where higher pump heads are encountered, we recommend you reduce the differential pressure in the effected zones by using a differential pressure regulator or a back pressure valve.

		Angle type				Straightway type		
Pipe size	R	½"	¾"	1"	1¼"	½"	¾"	1"
Dimensions	L	2⅜"	2⅝"	2 15/16"	—	3¾"	4"	4 29/32"
	I	—	—	—	—	19/32"	1⅜"	1¾"
VT 110	H max.	4¾"	4¾"	4¾"	—	4¾"	4¾"	4¾"
	h	15/16"	1⅛"	1 11/32"	—	—	—	—
	E	1"	1⅛"	1¼"	2¼"			
VT 105	F	2¼"	2½"	3"	3½"			
	G	5⅛"	5¼"	5⅜"	5¼"			

Alterations without prior notice

Printed in U.S.A.

10/75

BRAUKMANN
BRAUKMANN CONTROLS CORPORATION
56 Harvester Avenue Batavia, New York 14020

82

BRAUKMANN Thermostatic Zone Valves

Non-electric Type
For both Hot Water and Steam

VT 110
VT 105

CAPACITY OF BRAUKMANN THERMOSTATIC RADIATOR VALVES FOR HOT WATER GPM

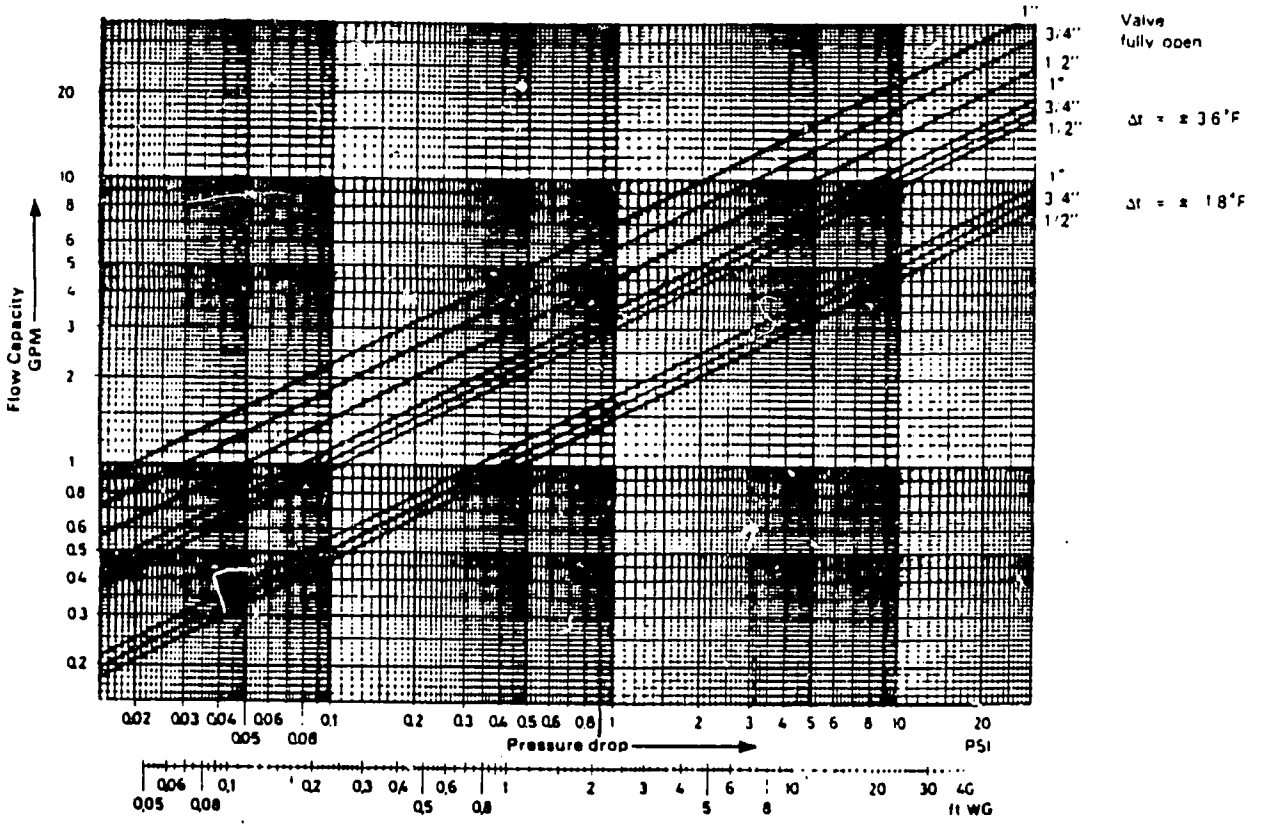

CAPACITY FOR LOW PRESSURE STEAM

Valve Size	Pressure drop across valve								
	BTU/Hr Valve fully open			BTU/Hr 7.2°F. Throttling Range			BTU/Hr. 3.6°F. Throttling Range		
	3 psi	5 psi	7 psi	3 psi	5 psi	7 psi	3 psi	5 psi	7 psi
1/2"	100,000	120,000	127,000	65,000	75,000	82,000	31,500	37,000	39,500
3/4"	126,000	149,000	162,000	69,000	82,000	88,000	33,500	40,000	44,000
1"	151,000	179,000	193,000	71,500	86,000	92,500	36,000	46,500	46,500

1 psi pressure = 2.3 feet water

Alterations without prior notice.

Printed in U.S.A.

BRAUKMANN
BRAUKMANN CONTROLS CORPORATION
56 Harvester Avenue Batavia, New York 14020

Product Availability
Fiberglas pipe insulations are available in thicknesses and for pipe sizes as shown below.

Within the ranges as shown, Fiberglas pipe insulations are also available in all copper tube sizes (CTS) from ⅝" to 6⅛".

	NOMINAL PIPE SIZES (NPS)		
Insulation thickness	**ASJ/SSL-II insulation**	**ASJ pipe insulation**	**No-Wrap pipe insulation**
0.5"	0.5"- 6.0"	0.5"- 6.0"	0.5"- 6.0"
1.0"	0.5"-15.0"	0.5"-33.0"	0.5"-33.0"
1.5"	0.5"-14.0"	0.5"-33.0"	0.5"-33.0"
2.0"	0.5"-12.0"	0.5"-33.0"	0.5"-33.0"
2.5"	2.0"-11.0"	2.0"-26.0"	2.0"-32.0"
3.0"	3.0"-10.0"	3.0"-21.0"	3.0"-36.0"
3.5"	4.5"- 9.0"	4.5"-17.0"	4.5"-30.0"
4.0"	4.5"- 8.0"	4.5"-14.0"	4.5"-29.0"
4.5"	6.0"- 7.0"	6.0"- 9.0"	6.0"-28.0"
5.0"	6.0"	6.0"- 8.0"	6.0"-27.0"
5.5"		6.0"	6.0"-26.0"
6.0"			6.0"-25.0"

Caution: It is possible that heat may be generated from the resinous binder in insulations if ignited by external sources such as welding slag, cutting torches, etc. care should be taken to avoid direct contact with the insulation by fire or ignition sources.

Organic binders used in the manufacture of fibrous glass pipe insulation decompose to some extent at operating temperatures above 350F. Thermal performance of the insulation is not affected by the loss of binder, but compressive strength and resiliency are altered. An acrid odor and smoke will emit from the insulation on piping start-up. Provide adequate ventilation to prevent buildup of gases. Pipe supports at hangers should be from the pipe itself or from high-compressive inserts such as Kaylo® asbestos-free pipe insulation. Minimum insulation thickness should be sufficient to provide personnel protection. Maximum insulation thickness should not exceed six (6) inches. If piping will be subjected to excessive vibration, consult your Owens-Corning Fiberglas representative for recommendations. For piping operating above 650F, insulation should be applied in a single layer.

The recommended insulation thicknesses shown in the ASHRAE 90A-1980 table at left are based on economic considerations only and do not attempt to prevent surface condensation. The table below left shows recommended insulation thicknesses to prevent surface condensation for frequently encountered design conditions.

ASHRAE 90A-1980 Insulation Thickness Guide Specification

Table 5.1 Minimum pipe insulation*

			Insulation thickness for pipe sizes				
Piping System Types	**Fluid Temperature Range**		**Runouts 2" max. 12' lgth**	**1" & less**	**1¼" to 2"**	**2½" to 4"**	**6" and over**
Heating systems Steam & Hot Water	°C	°F	in.	in.	in.	in.	in.
High pressure/ temperature	158-238	306-450	1.5	2.5	2.5	3.0	3.5
Medium pressure/ temperature	122-151	251-305	1.5	2.0	2.5	2.5	3.0
Low pressure/ temperature	94-121	201-250	1.0	1.5	1.5	2.0	2.0
Low temperature	43-93	120-200	0.5	1.0	1.0	1.5	1.5
Steam condensate for feed water	any	any	1.0	1.0	1.5	2.0	2.0
Cooling systems							
Chilled water, refrigerant	4.5-13 below	40-50 below	0.5	0.5	0.75	1.0	1.0
or brine	4.5	40	1.0	1.0	1.5	1.5	1.5

*Thicknesses shown are for conditioned spaces; for piping exposed to outdoor temperatures, increase thickness by 0.5".

Thickness recommendations to prevent surface condensation

Design Conditions	Pipe Sizes	Fluid temperature 50F	35F	0F
80F at 50% RH	⅝" OD thru 6" NPS	½"	½"	½"
80F at 50% RH	7" OD thru 12" NPS	1"	1"	1"
85F at 70% RH	⅝" OD thru 6" NPS	½"	½"	½"
85F at 70% RH	7" OD thru 12" NPS	1"	1"	1"
90F at 80% RH	⅝" OD thru 1" NPS	½"	1"	1"
90F at 80% RH	1⅝" OD thru 12" NPS	1"	1"	1½"

Derived from ASTM C 680 "Recommended Practice for determination of Heat Loss or Gain". Emittance: 0.9. Wind velocity: 0 mph.

Specification Compliance

Fiberglas pipe insulations comply with the property requirements of the following specifications:	ASJ/ SSL-II*	ASJ	No-Wrap
HH-B-100B, Type I and II: Barrier Material, Vapor	●	●	
HH-I-558B (Amend.3), Form D, Type III, Class 12 and 13: Insulation (Pipe and Tube Covering) and Pipe Fitting Covering	●	●	●
MIL-I-24344C (Ships)*: Insulation, Pipe Covering, Thermal	●	●	●
MIL-I-24244B (Ships): Insulation Material	●	●	●
U.S. Coast Guard 164.009: Non-Combustible Materials			●
Nuclear Regulatory Commission Guide 1.36: Non-Metallic Thermal Insulation (1)	●	●	●
ASTM C 547, Class 1 and 2: Mineral Fiber Pipe Insulation.	●	●	●
ASTM C 795: Thermal Insulation for Use over Stainless Steel. (1)	●	●	●
New York City MEA No. 344-83	●	●	●

*Requires waiver of alkalinity and pH requirements. (1) Lot testing may be required.

OWENS-CORNING FIBERGLAS

OWENS-CORNING FIBERGLAS CORP.
Mechanical Insulation Products
Fiberglas Tower, Toledo, Ohio 43659

Pub. 5-IN-14726-C Litho in USA November 1988

Copyright © 1988 Owens-Corning Fiberglas Corp.

SH-2

84

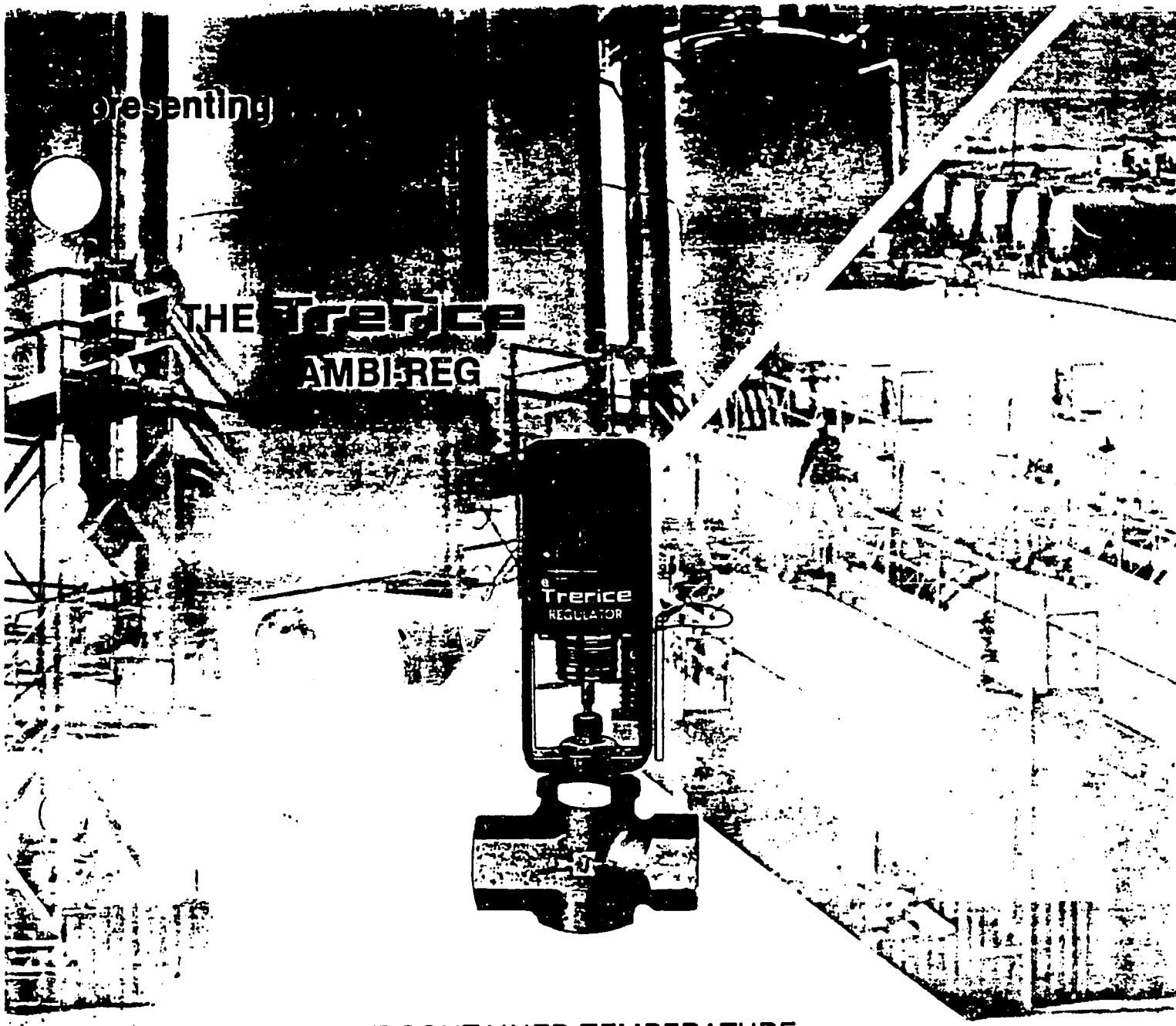

A SELF-CONTAINED TEMPERATURE CONTROL VALVE FOR USE ON PLANT STEAM TRACER LINES

Trerice®

H. O. Trerice Co.

MANUFACTURERS OF
TEMPERATURE & PRESSURE INSTRUMENTS

BULLETIN NO. 501

DISTRIBUTED BY:

Trerice

AMBI-REG

SELF-OPERATING TEMPERATURE REGULATOR

APPLICATION

The TRERICE AMBI-REG TEMPERATURE CONTROL VALVE has been designed to sense the ambient temperature of its immediate environment. It is therefore ideally suited for installation on steam tracer lines providing protection against freezing for outside pipelines, storage tanks, and plant instrumentation. It can be also used on other types of equipment where control is based on ambient temperature. The AMBI-REG is totally self-contained and performs its control function without an external power source such as electricity or plant air. Requiring little or no maintenance once installed, the TRERICE AMBI-REG SELF-CONTAINED TEMPERATURE REGULATOR can be relied upon to provide years of accurate, uninterrupted service, and continued energy savings.

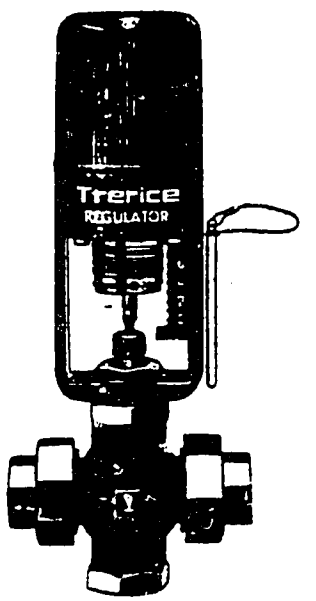

FEATURES

The TRERICE AMBI-REG REGULATOR when installed on your steam tracer lines will provide:

- - - ENERGY SAVINGS.
- - - PROTECTION AGAINST COSTLY FREEZE-UPS.

And because of its self-contained design will

- - - CUT DOWN ON MAINTENANCE COSTS.
- - - PROVIDE IN LINE SERVICIBILITY.

CONSTRUCTION

The TRERICE AMBI-REG is ruggedly built. The yoke and cap are heavy aluminum castings. Lifetime lubrication is incorporated in the adjustment screw bushing. The teflon valve packing is also self-lubricated. The adjustment spring and thermal system bellows are enclosed and protected from corrosive conditions. This regulator has been designed to insure its user years of trouble free service.

SPECIFICATIONS

The TRERICE AMBI-REG can be ordered with the following standard specifications.

PORT SIZES: ⅛", 3/16", ¼", 3/8", ½", ¾", 1", 1¼", 1½", 2".

VALVE MATERIAL AND END CONNECTIONS: Bronze body, union ends — ½" thru 2", Cast steel body, screwed ends — ¾" and 1", Bar stock valve in brass, steel, 304 and 316 S.S. — ¼".

TRIM AND ACTION: Single seated, stainless steel trim, decrease in temperature causes the valve to open.

CONTROL RANGE: 20 to 70°F (−10 to 20°C) standard. For other ranges consult factory.

NOTE: OTHER VALVE BODY MATERIALS, SIZES, TRIMS, ACTIONS, AND CONTROL RANGES ARE AVAILABLE ON SPECIAL ORDER. CONTACT YOUR LOCAL TRERICE REPRESENTATIVE OR CONSULT THE FACTORY.

86

APPENDIX G
Photographs

1. A worker installing pipe insulation.

2. A blowdown heat recovery unit to preheat boiler feedwater. It was installed next to the boiler. From left to right: Robert Erickson (RMA), Jan Kos (Brewmaster), Joseph Ruzek (Power Engineer) and Vaclav Smejkal (Technical Director)

APPENDIX H
List of Abbreviations

AC	= alternating current
amps	= amperes
atm	= atmosphere = 14.696 pounds per square inch
bar	= 100,000 pascals = 14.504 pounds per square inch
BTU	= British thermal unit
cfm	= cubic feet per minute
cm	= centimeter = 0.3937 inches
cm^2	= square centimeter = 0.155 square inches
CO	= carbon monoxide
CO_2	= carbon dioxide
DC	= direct current
°C	= degree Celsius T[°C] = 5/9*(T[°F] - 32)
°F	= degree Fahrenheit
°R	= degrees Rankine T[°R] = T[°F] + 460
eff	= efficiency
ex air	= excess air
Gcal	= gigacalorie = 1 billion calories = 3.968 million BTU
GJ	= gigajoules = 1 billion joules
gph	= U.S. gallons per hour
gpm	= U.S. gallons per minute
GWh	= gigawatt hours = 1 billion watt hours
H_2	= hydrogen
H_2O	= water
H_2SO_4	= sulfuric acid
hectare	= 10,000 square meters = 2.471 acres
hectoliter	= 100 liters = 26.42 U.S. gallons
Hg	= mercury
hr	= hour
Hz	= hertz = cycles per second
J	= joules
kcal	= kilocalories = 1 thousand calories = 3.968 BTU
Kcs	= 29.77/$1 US
kg	= kilogram = 2.2046 pounds
Kgcc	= 7,000 Kcal = 27,776 BTU
kJ	= kilojoules = 1 thousand joules = 0.947813 BTU
km	= kilometer = 0.621 miles
kN	= kilonewton = 1 thousand newtons
kPa	= kilo pascals = 1 thousand pascals = 0.14504 pounds per square inch
kV	= kilovolts = 1 thousand volts
kVa	= kilovolt-amperes
kVAr	= kilovars = 1 thousand volt-amperes (reactive)
kW	= kilowatt = 1 thousand watts
kWh	= kilowatt hour = 1 thousand watt hours
lbs	= pounds
liter	= 0.2642 U.S. gallons = 0.03531 cubic feet
m	= meter = 39.37 inches
m^2	= square meter = 10.76 square feet

m^3	= cubic meter = 35.31 cubic feet
mA	= milliampere = 0.001 amperes
metric ton	= 1 thousand kilograms = 1.1023 U.S. tons
mg	= milligrams
min	= minute
MJ	= megajoules
mm	= millimeter = 0.03937 inches
MPa	= 1 million pascals = 145.04 pounds per square inch
MVA	= megavolt-amperes
MW	= megawatt = 1 million watts
MWh	= megawatt hours = 1 million watt hours
NG	= natural gas
nm	= nanometer
Nm^3	= cubic meters at standard conditions of temperature and pressure (20°C and 1 atmosphere)
NO_X	= nitrogen oxide
O_2	= oxygen
P	= pressure
PC	= personal computer
ppm	= parts per million
psi	= pounds per square inch
psig	= pounds per square inch (gauge)
R	= thermal resistance
s	= second
SO_2	= sulfur dioxide
sq ft	= square feet
Tcal	= teracalorie = 1 trillion calories = 3.968 billion BTU
T	= temperature
V	= volts
VArs	= volt-amps (reactive)
VSD	= variable speed drive
yr	= year