PN-ABL-037
76714

ENERGY EFFICIENCY AUDIT REPORT

MOSTAREN BREZNO PLANT
Brezno, Czechoslovakia

JANUARY 1992

PREPARED BY: RESOURCE MANAGEMENT ASSOCIATES OF MADISON, INC.
Madison, WI

and

ELEKTROPROJEKT
Banska Bystrica, Czechoslovakia

U.S. EMERGENCY ENERGY PROGRAM FOR EASTERN AND CENTRAL EUROPE

U.S. AGENCY FOR INTERNATIONAL DEVELOPMENT
BUREAU FOR EUROPE
WASHINGTON, D.C. 20523

ENERGY EFFICIENCY AUDIT REPORT

MOSTAREN BREZNO PLANT
Brezno, Czechoslovakia

JANUARY 1992

PREPARED BY: **RESOURCE MANAGEMENT ASSOCIATES OF MADISON, INC.**
520 University Avenue
Suite 300
Madison, WI 53703
(608) 283-2880

and

ELEKTROPROJEKT
Partizanska cesta 3
975 82 Banska Bystrica
Czechoslovakia
42-88-43146

U.S. EMERGENCY ENERGY PROGRAM FOR EASTERN AND CENTRAL EUROPE

U.S. AGENCY FOR INTERNATIONAL DEVELOPMENT
BUREAU FOR EUROPE
OFFICE OF DEVELOPMENT RESOURCES
ENERGY & INFRASTRUCTURE DIVISION
WASHINGTON, D.C. 20523

USAID Contract EUR-0015-C-1006-00

Table of Contents

i. Executive Summary 1

ii. Description of Energy Efficiency Program 4

1.0 Plant Description 6

2.0 Plant Energy Profile 9

3.0 Audit Description 19

4.0 Summary of Results 21
- 4.1 Short-Term Energy Conservation Opportunities 21
- 4.2 Long-Term Recommendations 24

5.0 Plant Management/Organization 25

6.0 Implementation Evaluation 26
- 6.1 Combustion Analyzer 26
- 6.2 Combustion Instrumentation 26
- 6.3 Heating Control Valves 27

List of Tables

Table 1. Summary of Estimated Energy Savings 2
Table 2. Factory Energy Consumption and Costs for 1990 10
Table 3. Mostaren Brezno Energy Prices, March 1991 10
Table 4. Combustion Analysis, Old Coal-fired Boiler No. 3 23
Table 5. Combustion Analysis, New Coal-Fired Boiler 23

List of Figures

Figure 1. Facility Plot Plan 8
Figure 2. New Boiler House Hot Water Diagram 11
Figure 3. Old Boiler House Steam and Hot Water Diagram 13
Figure 4. Domestic Hot Water Production Diagram 14
Figure 4B. Typical Hot Water Heat Exchanger/Storage Tank Configuration 15
Figure 5. Compressed Air Schematic Diagram 16
Figure 5B. Compressed Air Diagram 17
Figure 6. Electric Schematic Diagram 18

List of Appendices

Appendix A
Calculation for Uncontrolled Building Heating

Appendix B
Calculations for Double Pane Windows

Appendix C
Calculation for Uninsulated Piping

Appendix D
Calculations for Coal Fired Boiler Reduced Excess Air

Appendix E
Heat Recovery from Painting and Curing Booths

Appendix F
Miscellaneous

Appendix G
Photographs

Appendix H
List of Abbreviations

i. Executive Summary

The countries of Eastern Europe face unprecedented changes in both their political and economic systems. To aid in the transition to market economies, the U.S. Agency for International Development (USAID) designed the Eastern Europe Emergency Energy Program. Resource Management Associates of Madison, Inc. (RMA) is the technical assistance contractor for the Industrial Energy Efficiency Component (IEEC) of the program in Czechoslovakia. RMA was provided valuable assistance by two in-country subcontractors: 1) Stredeisko pro Efektivni Vyuzivani Energie (SEVEn), in the plant selection and in-country logistics; and 2) Elektroprojekt in the audit and equipment installation work.

Czechoslovakia faces severe energy problems including uncertain oil supplies, pollution from coal, and questions about the future of nuclear energy. The Czechoslovakian industrial sector has experienced large increases in energy prices, the latest in January, 1991. At the same time, the country has embarked upon a fundamental economic structural reform. The US Agency for International Development established the Industrial Energy Efficiency Program to help mitigate the impacts of increased energy costs on the industrial sector by providing technical support through energy audits and economic support through purchase and installation of energy conservation equipment in selected representative industrial plants.

As part of this program, an energy audit was conducted at the Mostaren Brezno factory in Brezno, Czechoslovakia. The factory produces industrial machinery, building cranes, transport machines, and elevating machines.

Energy Audit

The Mostaren plant energy audit was conducted during the period of March 25-29, 1991. Hot water, steam, solid fuel, space heating, and electric power systems were examined to determine viable opportunities for energy saving improvements. Results of the audit showed four areas of immediate improvement which could reduce the plant's coal fuel consumption by 12.8 percent, as shown in *Table 1*.

1. Uncontrolled building heat could be eliminated by the addition of temperature regulating control valves to the heat radiators.

2. Insulating hot pipes and valves would result in energy savings.

3. Boiler flue gas energy losses due to high levels of excess air could be reduced by routine monitoring with a combustion analyzer and manual adjustment of the boiler combustion controls. In this way, high excess air levels in the boiler, caused by variations in the fuel composition and wide range of firing rates, could be avoided.

4. Converting the single pane windows in production hall #1 to double pane windows would reduce building energy losses.

Other opportunities exist for further energy conservation, but based on the audit, these four areas could be implemented quickly and demonstrate relatively short payback periods.

Due to production changes, uncertain product demand, and loss of military production contracts, Mostaren has postponed plans to add two new natural gas-fired boilers. The old coal-fired boilers are now only used for a small amount of steam production and back-up for the new coal-fired boiler. While the factory plans to eliminate steam use in the factory kitchens by converting the kitchens to electricity, the entire plant uses hot water for space heating.

Table 1. Summary of Estimated Energy Savings

Description	Estimated Hot Water Savings (GJ/year)	Estimated Fuel Savings (Coal) (Metric Ton/Year)	Estimated Fuel Savings (Coal) (Kcs/Year)
Uncontrolled Building Heating	10,796	948.0	669,352
Uninsulated Piping	1,350	118.0	83,222
Boiler Efficiency Increase by Reducing Excess Air	8,188	714.8	504,220
Single Pane Windows	8,708	765.4	539,920
Total	29,042	2,546.2	1,796,714

Notes: Total energy savings represents 12.8 percent of the hot water production for 1990, 227443 GJ total.

Total fuel savings represents 12.8 percent of the fuel consumption for 1990, 19855 metric tons brown coal total.

Fuel cost for mixed brown coal (sized and powder): 705.4 Kcs/metric ton.

Heat recovery from the paint spray booths and paint curing booths was investigated by the audit team. The booth exhaust air energy could be recovered with an air-to-air heat exchanger but due to the low operating hours, low exhaust volume, and high equipment cost, the application has a long payback. Heat recovery from the paint booths would not be practical.

Several long-term opportunities for energy conservation were also discovered during the audit. These are described in Section 4.0.

As the final result of the energy audit at Mostaren, the audit team specified two energy conservation methods which have the best payback period and fall within the equipment budget to implement those recommendations:

1. Thermostatically controlled valves for space heating.
2. Boiler flue gas combustion analyzer.

Specifications for this equipment are shown in Appendix A and D.

Implementation Phase

A followup visit was made to the plant July 31 to August 2, 1991. The auditors verified that the equipment purchased for the plant under this program had been delivered. Training was provided to plant staff on the use of the portable equipment. The fixed equipment was not yet installed at the time of the implementation phase visit, but has since been completed.

ii. Description of Energy Efficiency Program

The industrial sector in Czechoslovakia is very well developed, with many large and heavy industries. However, there are many medium size industries that consume a large percentage of the industrial energy use. Many of these specific industries are made up of multiple companies or similar plants within the country, making them ideal targets for the industrial energy audit work since potential replication is very high. Many of these medium size plants are very viable, but have not yet implemented energy conservation activities.

Changes within the system (increased energy prices, privatization, etc.) will create a new emphasis on the necessity to increase energy efficiency and reduce energy intensity of production.

Along with the industrial audit program, the overall energy efficiency program will provide training on energy efficiency practices and measures and energy management. This training will demonstrate the benefits of energy conservation, and the energy management training will illustrate the advantages of making all employees aware of energy waste.

The Industrial Energy Efficiency Project is based on four distinct tasks:

1. Industrial plant screening
2. Industrial plant energy audit
3. Policy analysis
4. Implementation.

Fifteen industrial plants were screened to provide a basis of selection of the plants to be audited. The criteria used in plant selection included:

- the opportunity for energy savings (with a focus on oil savings)
- potential replicability of energy saving options in similar plants or systems,
- future viability of the plant in the changing economy
- the size of the plant
- other activities such as joint ventures or other bilateral aid projects.

The energy audit activity consisted of a determination of overall energy efficiency of the selected plant and identifies no/low-cost equipment opportunities which have short-term payback. An assessment was made of the technical and management capabilities and the capital investment decision-making process regarding energy conservation applications. At the completion of the energy audit, equipment specifications and other documents required for procurement of U.S. equipment or materials were prepared (if required).

In the implementation phase, equipment specified in the energy audit was procured, cleared through customs and delivered to the plant. Also, requirements for installation of the

material were identified. Materials that cannot be found in country were ordered from the U.S. Following completion of the installation, an implementation evaluation was made of the effectiveness of the energy conservation application.

1.0 Plant Description

Mostaren Brezno is located at: 9 Mostaenska Str., 977 56 Brezno, (Slovakia) Czechoslovakia. The factory produces industrial machinery and transport machines. Mostaren had approximately 584 million Kcs in sales in 1990.

The plant operations are directed by:

Mr. Milan Crepp, Director
Mr. Peter Buzgo, Technical Director
Mr. Jan Medved, Power Engineer
Mr. Josef Muransky, Technician

The plant phone numbers are (0867)2655 and fax (0867)2440.

The Mostaren factory consists of several large production halls, new power house, new compressor station, old power house, machine shop, administrative office buildings, technical gas production and storage area, cafeterias, and outdoor steel material storage bays, as shown on the facility plot plan, *Figure 1*. Production halls No. 3 and 4 were intended for military production contracts that did not develop. Construction of these two halls and the completion of the new power house projects are on hold pending improvement in Mostaren's sales and new product development.

Mostaren produces construction cranes and elevating equipment. The factory consists of medium to large scale metal machining and heavy weldment fabrication. Mostaren manufactures all of the components for the cranes including gears, wire cable assembly, and assembly of drive trains. The factory also has eight small heat treating/annealing electric furnaces.

Mostaren produces acetylene for their own use (60,000 m^3/yr) and purchases all other technical gasses (410,000 m^3/yr oxygen and 170,000 m^3/yr carbon dioxide).

The finished products are painted in two areas of the plant.

1. An open spray area for large items. Ventilation is provided by a large exhaust fan that draws air from the room through floor vents containing filters.

2. Four enclosed paint spray booths and four paint curing booths. The paint booths are heated by heated by a hot water system that heats outdoor air that is then ventilated to the outside with four exhaust fans. The paint curing booths are heated to 50 °C and equipped with interior air circulators to provide quick drying. The curing booths are ducted to the atmosphere to vent fumes.

The factory is currently operating below capacity. The factory operates two shifts (6:00AM 2:30PM, 2:30PM-11:00PM), five days per week. The second shift is currently only a smal fraction of the first.

Figure 1. Facility Plot Plan

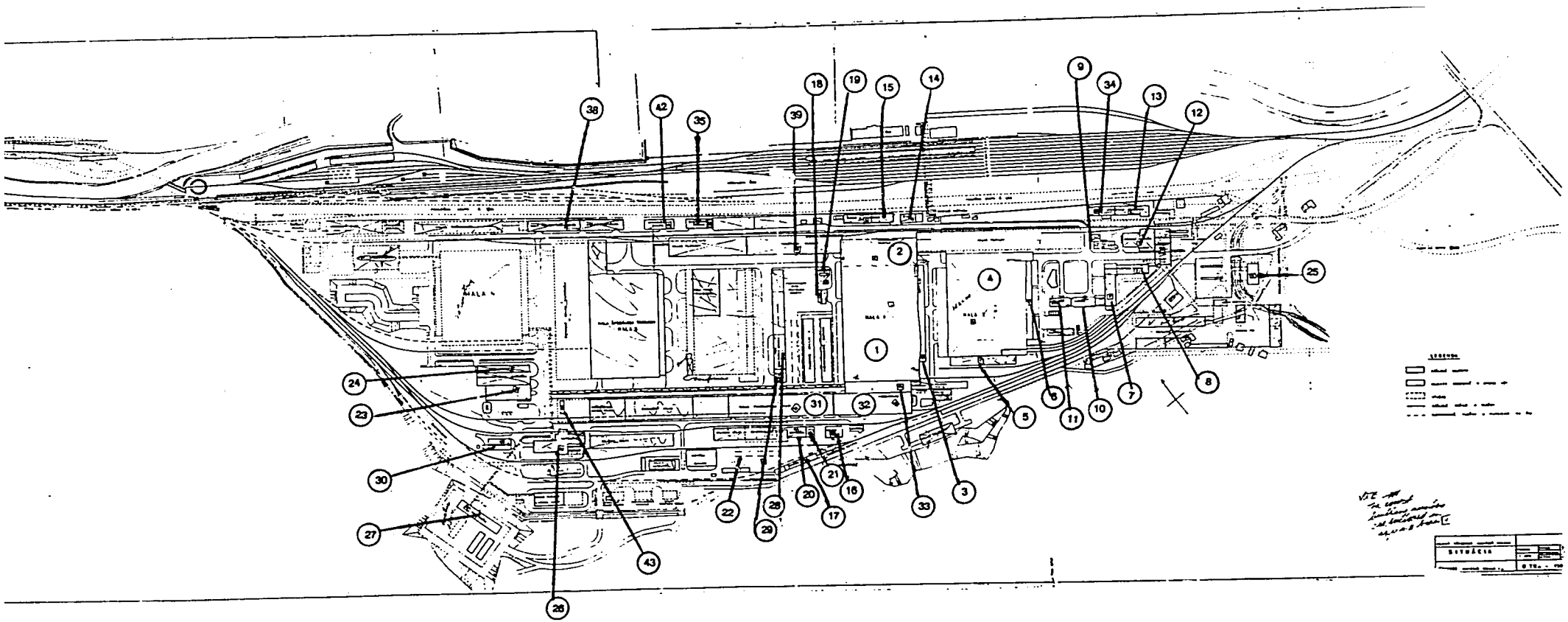

2.0 Plant Energy Profile

Mostaren utilizes brown coal, coke and electricity for the production of its products. Brown coal is the principle fuel, but a small quantity of coke is used to heat metal shapes prior to bending and forming. The plant produces hot water and steam to meet process and space heating demand. The majority of the steam and hot water energy use is for space heating of the factory and surrounding buildings. The plant engineer estimates the plant energy consumption is divided up as 69% for space heating, 22% for production, and 9% for domestic hot water and kitchen. The majority of the electrical demand is for operating the production machines and for the power house. The company purchases fuel and provides heating to several off-site buildings: health clinic, two schools, cultural center, offices, workshop, and recreation center. Coal, coke, light fuel oil, and natural gas are consumed by these buildings. For the purpose of this audit, since the off-site energy use was low, only the factory production area was audited.

Table 2 contains the annual fuel and electrical profile for 1990. The coal consumption follows the heating season through the year with a peak in January of 3259 metric tons and a low in August of 155 metric tons. Prices paid by Mostaren for brown coal in 1990 are as follows: "nut" (Type 102-12-213-12-30) 448 Kcs/metric ton, "granular" (Type 102-13-513-12-30) 377 Kcs/metric ton, "powder" (Type 102-15-213-12-30) 288 Kcs/metric ton. The majority of the coal is sized "nut" brown coal and received from a mine near Most, Czechoslovakia. The average heat content, based on 1990 consumption records, is 15.48 GJ/metric ton. Mostaren purchases more of the higher grade coal in the winter. Electrical consumption appears to have followed the heating season throughout 1990. *Table 3* shows the current prices for energy at Mostaren.

Mostaren produces hot water at 100 to 150 °C using a new 34.8 MW boiler. The boiler is able to fire sized and powdered brown coal. Hot water is circulated by several pumps located in the new power house to provide process heating and space heating as shown in *Figure 2*, New Boiler House/Hot Water Diagram. The types of space heating registers in the plant are: straight tube radiators, finned tube radiators, forced air unit heaters, and forced air with outdoor makeup air unit heaters. The new boiler is a spreader stoker type with outdoor coal storage, coal conveyors, preheated combustion air economizer, ash disposal system, flue gas electrostatic precipitator, exhaust fan, and exhaust stack. The boiler was installed in 1986 and produced 176,950 GJ of hot water heat for 1990. The new 35 MW boiler is oversized for the demand; average firing rate is 5-10 MW, with a maximum peak demand at the start of the first shift of 20.7 MW. The power engineer monitors the new boiler's fuel usage and heat output. The overall fuel to hot water efficiency is 74 percent (the actual coal heat content is estimated).

Table 2. Factory Energy Consumption and Costs for 1990

MONTH	SIZED BROWN COAL (METRIC TON)	POWDER BROWN COAL (METRIC TON)	TOTAL COAL COST (METRIC TON)	ELECTRIC (kWh)	ELECTRIC COST (Kcs)
January	399	2860	1278028	1611888	881703
February	919	1741	1116901	13284	735869
March	1267	906	976825	1375076	734291
April	1518	301	874629	1176708	653073
May	1273	0	638400	929740	531811
June	72	473	214609	857314	480953
July	185	0	92736	772352	456460
August	155	0	77504	874660	507303
September	348	0	174720	1053620	634279
October	1261	57	653617	1320204	726112
November	764	1765	1048445	1415000	764100
December	3071	520	2800919	1344024	1210966
TOTAL	11232	8623	9947334	12743870	8316920

Average brown coal price (Kcs/metric ton): 501
Average electric price (Kcs/kWh): 0.59

The factory also consumed 120.42 tons of coke in the heat-treating process. Average cost 824 Kcs/ton.

Table 3. Mostaren Brezno Energy Prices, March 1991

ITEM	ENERGY CONTENT	UNIT PRICE
Electricity	(average price)	0.937 Kcs/kWh
Sized brown coal	15.96 GJ/metric ton	747 Kcs/metric ton
Powder brown coal	12.5 GJ/metric ton	449 Kcs/metric ton
Light fuel oil	42.3 GJ/metric ton	7200 Kcs/metric ton
Natural gas	33.41 GJ/m^3	1.92 Kcs/m^3
Coke	22.85 GJ/metric ton	912 Kcs/metric ton

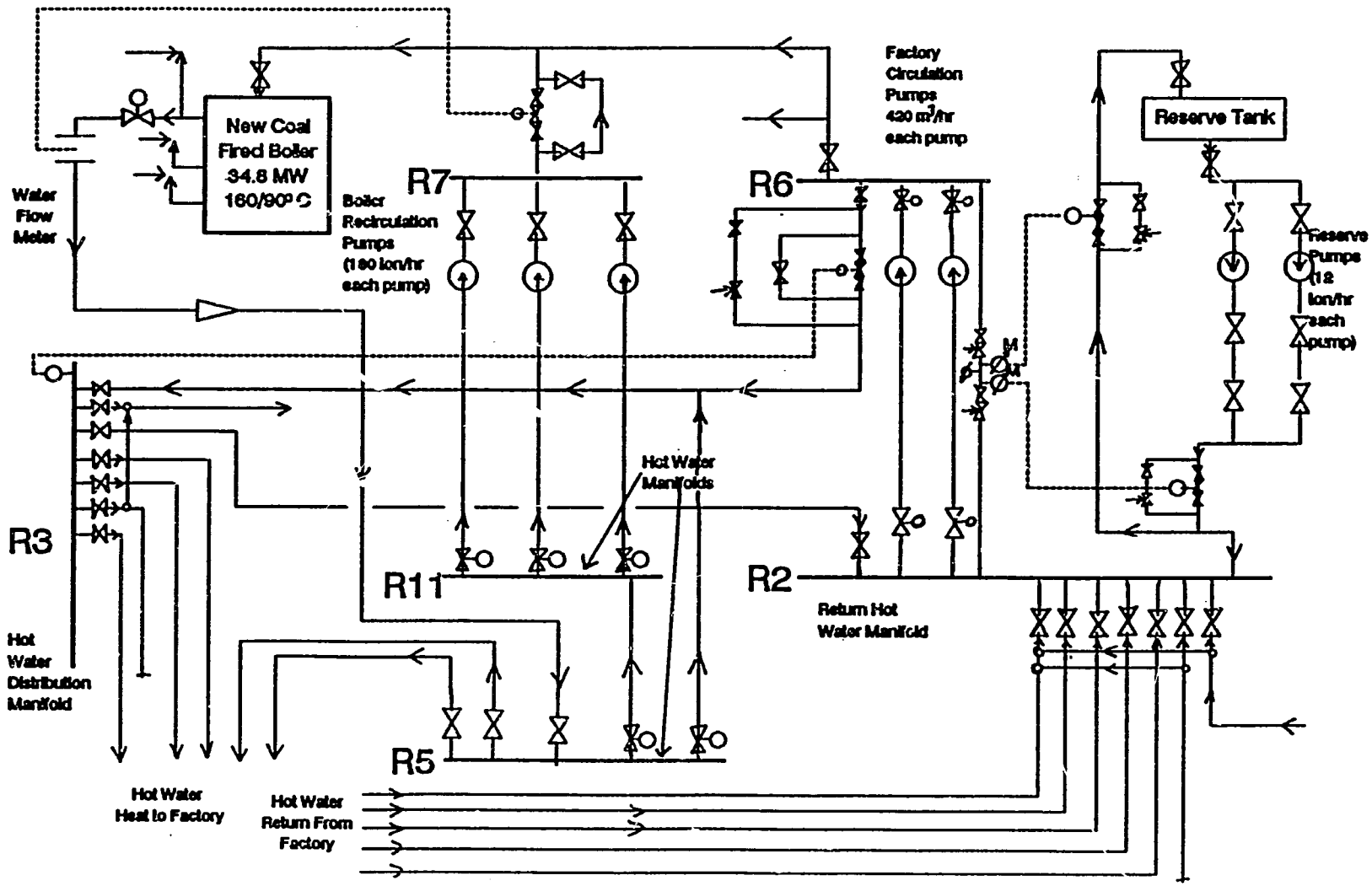

Figure 2. New Boiler House Hot Water Diagram

The power plant plan includes the addition of two natural gas fired watertube boilers (11.6 and 34.8 MW) by 1993. Also, combustion controls and space heating controls were scheduled to be completed by 1994/1995. The extra capacity and controls would have been needed with the completion of the plant expansion.

Mostaren operates the old boiler plant, which contains five spreader stoker type coal-fired boilers, to provide steam for the kitchens and some space heat. The old boiler plant is shown in *Figure 3*, Old Boiler House Steam and Hot Water Diagram The design of the coal burners enable these boilers to fire only sized brown coal. In the summer, during maintenance on the new boiler, boilers 1 and 2 carry the plant's hot water energy demand. The old boiler plant produced 34,967 GJ of steam and hot water heat for 1990. Mostaren plans to reduce the use of the old boiler plant with the elimination of steam usage by the kitchens and space heating in the open paint spray area.

The plant has nine service hot water heaters that heat water to 72 °C by hot water provided by the boilers (See *Figure 4*).

The plant has four new air compressors capable of producing 2200 m^3/hr each. The old compressors are no longer in service. The air compressor configuration is shown in *Figure 5*. Typically, one compressor can manage the entire plant air demand. The compressors are two stage design with intercooling between each stage. Cooling water is circulated through the compressors and the gained heat rejected in two cooling towers.

Electric power is provided by the utility at 22,000 volts and stepped down to 400 volts with several power transformers, as shown in *Figure 6*. The electric power stations are distributed throughout the plant at six locations. The power supply system is equipped with power factor correction systems. The plant on average has been able to maintain a 0.95 or greater power factor. Electric consumption was 14,059,000 kWh for 1990.

The factory obtains water from the local municipality. Water is used for cooling the air compressors, boiler make-up, service hot water, and potable water uses.

Figure 3. Old Boiler House Steam and Hot Water Diagram

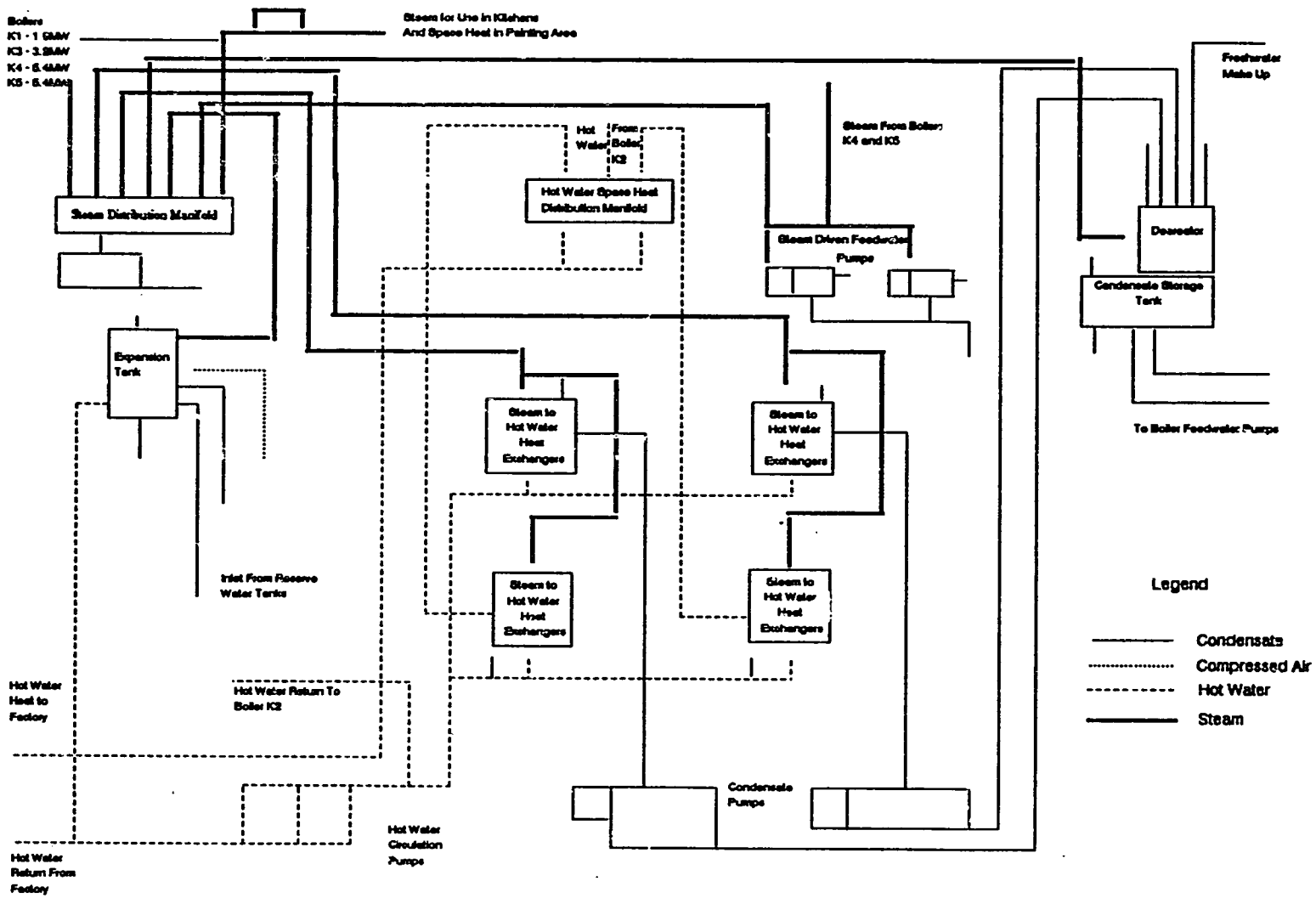

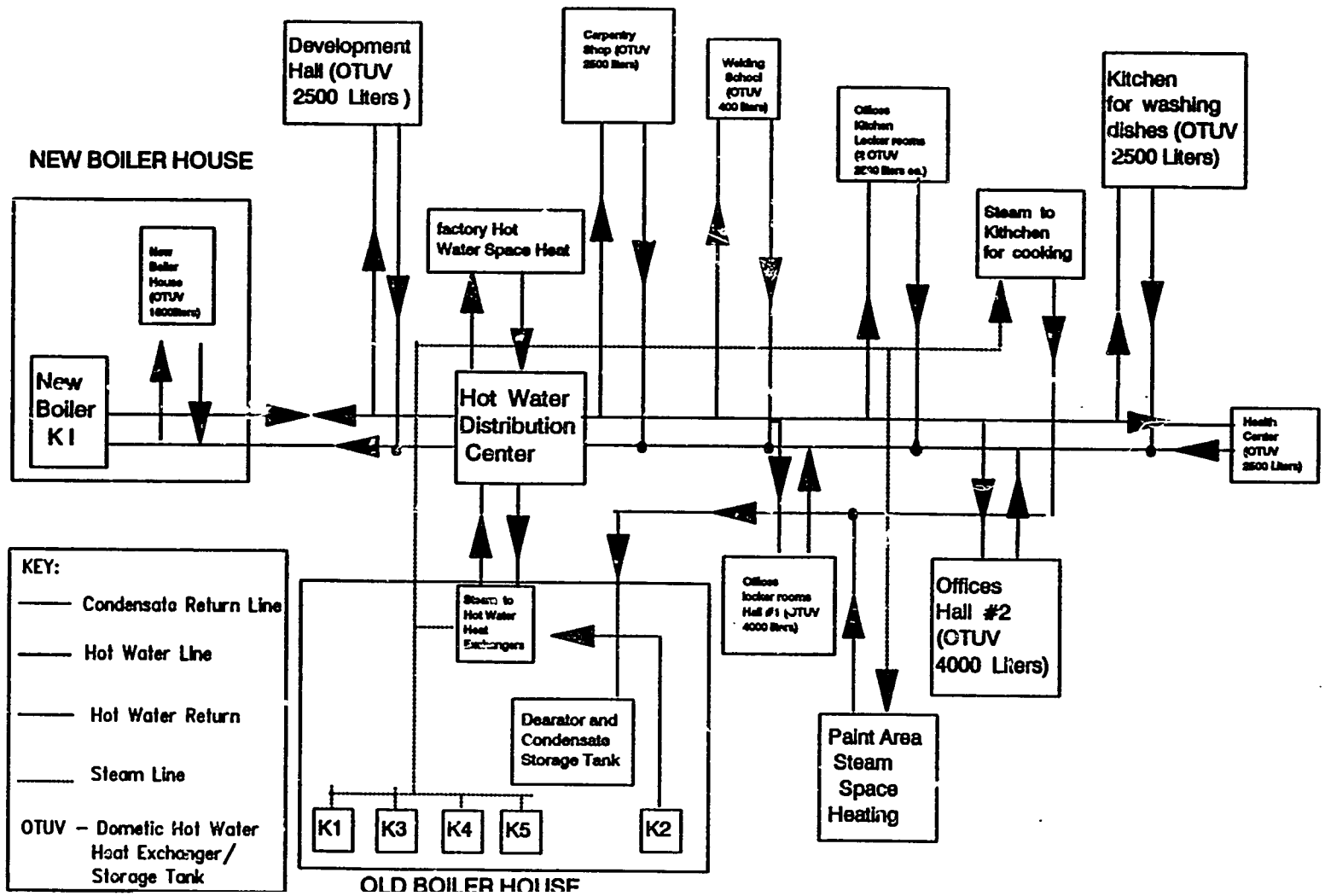

Figure 4. Domestic Hot Water Production Diagram

Figure 4B. Typical Hot Water Heat Exchanger/Storage Tank Configuration

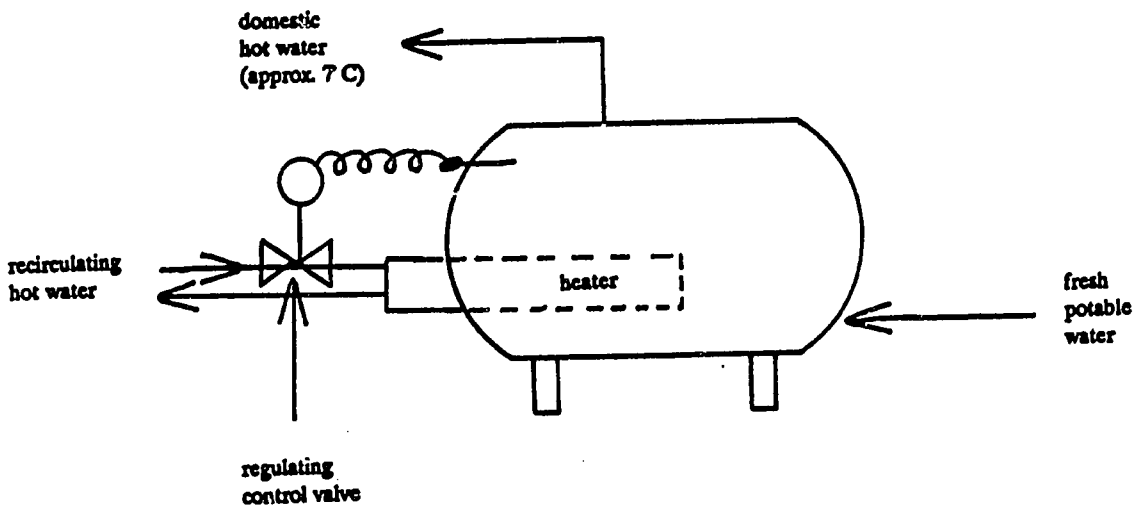

Figure 5. Compressed Air Schematic Diagram

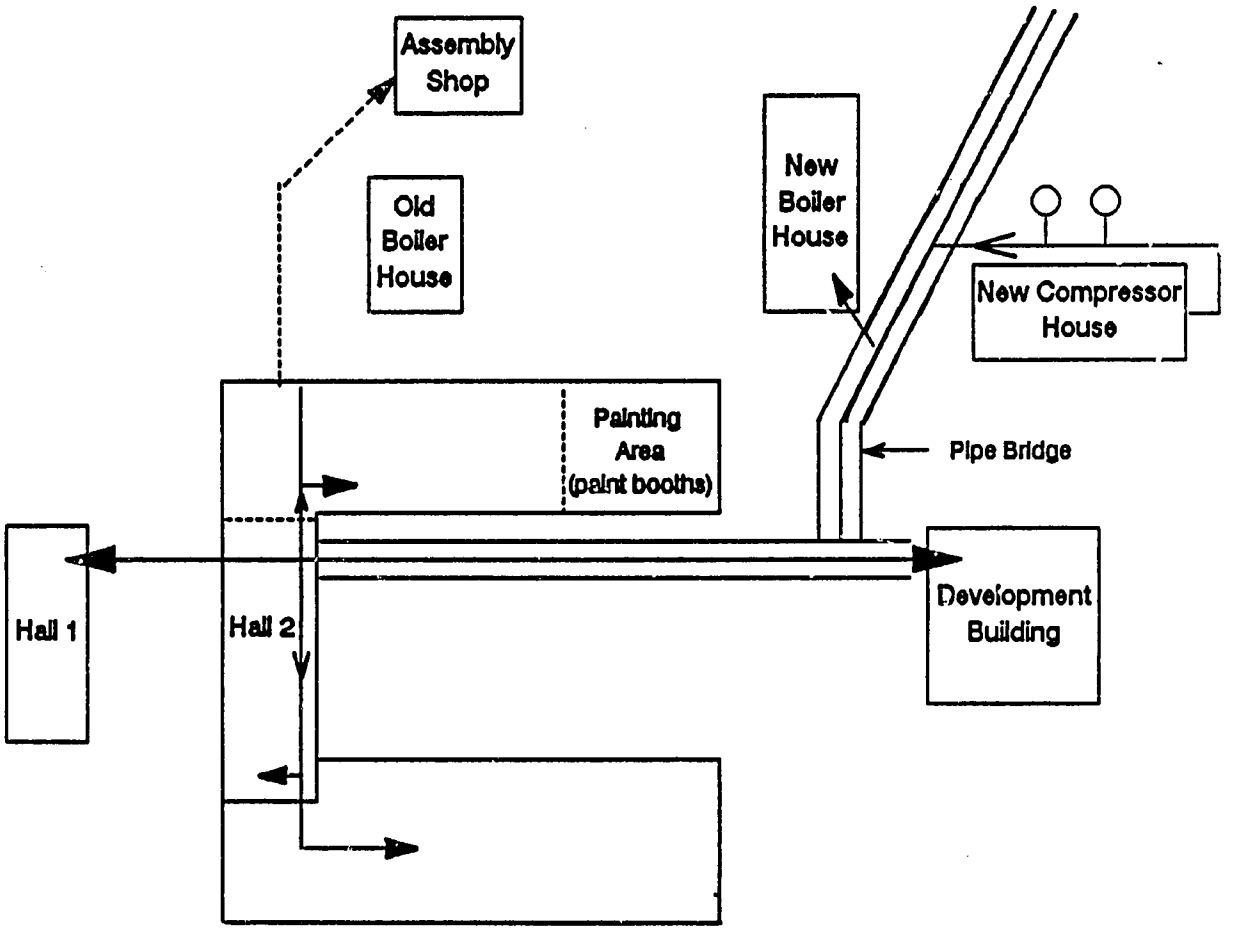

Figure 5B. Compressed Air Diagram

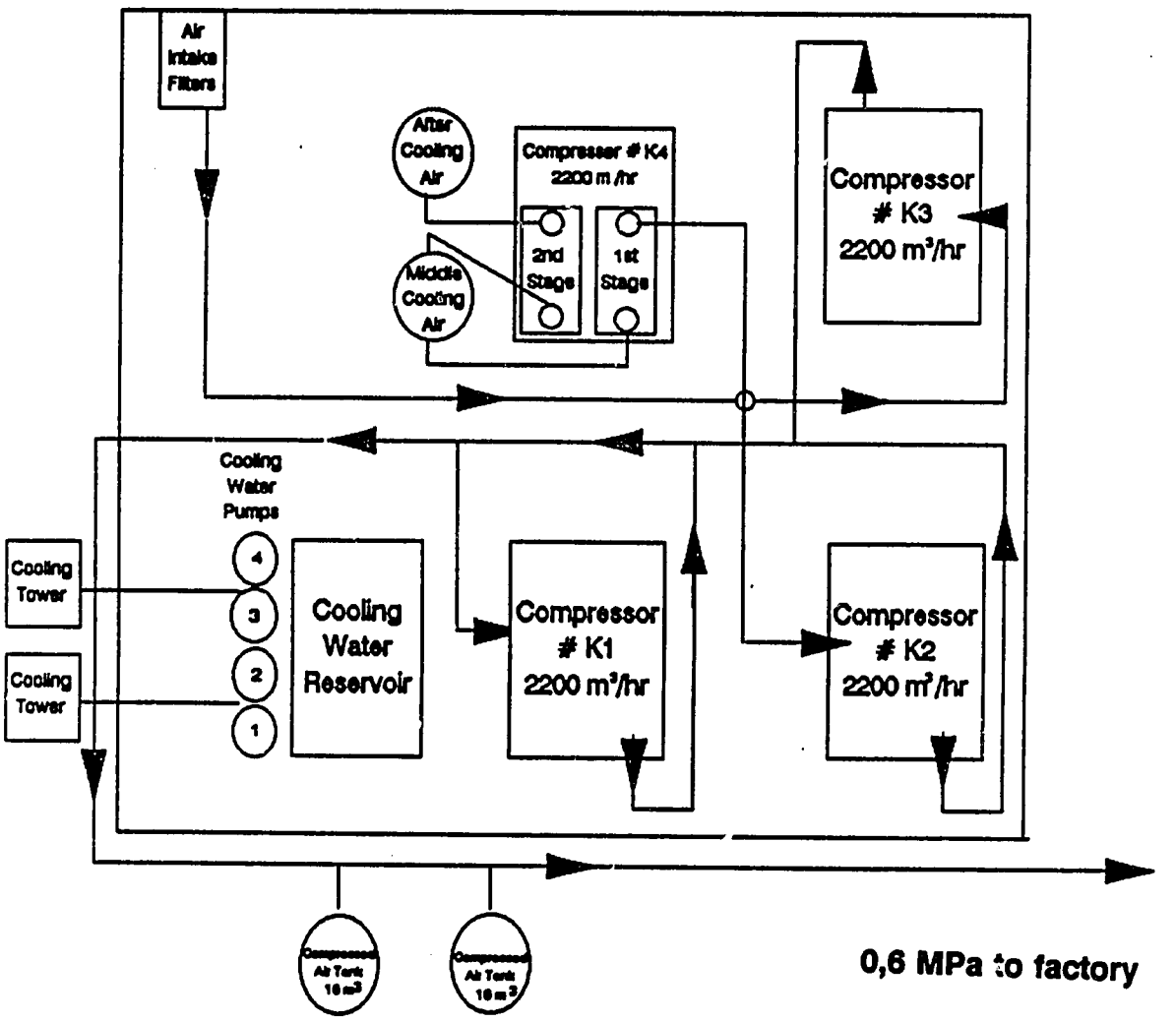

Figure 6. Electric Schematic Diagram

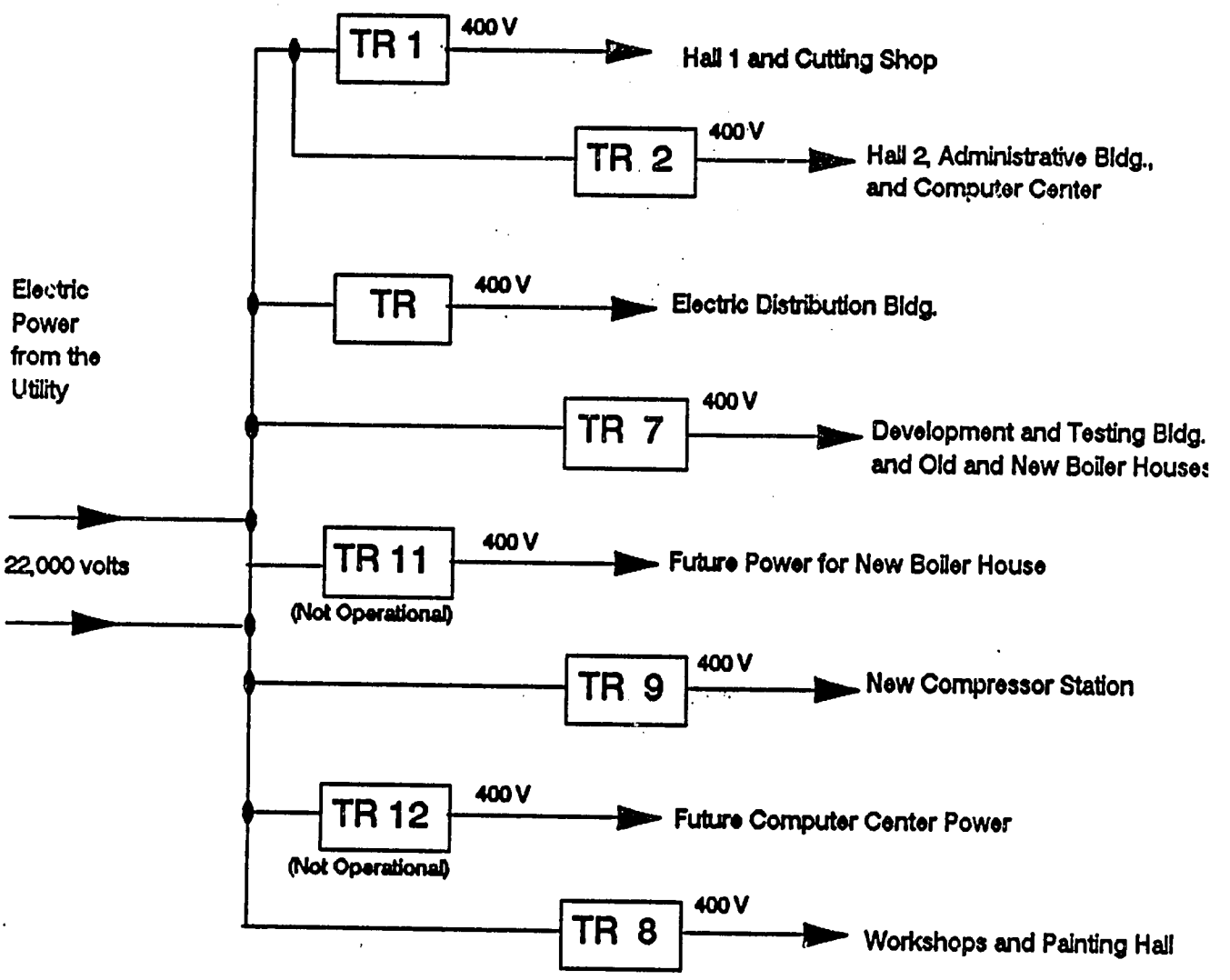

KEY: TR = Transformer

3.0 Audit Description

The audit began with a meeting at the plant on March 25, 1991, attended by Mr. Milan Crepp, plant manager; Mr. Medved, power engineer; Mr. Bruzgo, technical director; Mr. Pavelic and Mr. Dries of the audit team; Mr. Erickson of RMA; and Mr. Slavkovsky and Mr. Misina of the State Energy Inspectorate (SEI). Mr. Slavkovsky also served as the interpreter. Mr. Vcelarik of Slovensky plynarensky priemysek (SPP) and Mr. Leitner of Zavody Tazkeho Strojarstva (ZTS) also attended the meeting. A discussion was held concerning the purpose of the audit. There was a tour of the plant facilities to determine the general layout and arrangement of the facilities and obtain an understanding of the operations. The tour continued on Tuesday. Specific areas of the plant to be audited in detail were selected. These areas/items included: piping insulation; uncontrolled building heating; boiler combustion efficiency tests; flow measurements in the boiler house; temperature and flow measurements of supply and exhaust air from the paint booths and paint drying booths; and roof and window construction in building areas no. 1 & 2. Audit data collection and energy measurements were started on Wednesday and completed on Thursday. Mr. Rutsek of ZTS also served as an interpreter on Thursday and Friday.

The audit of uninsulated pipes and uncontrolled space heating was limited to areas no. 1, 2, 31 & 32 because of time constraints.

The audit team was assisted by Mr. Misina and Mr. Blaha from SEI in Bratislava on Wednesday and Thursday. The plant technical director and power engineer also were present to answer questions and provide guidance. Mr. Furdick of Mostaren furnished information on the energy usage of various buildings from a report completed in 1989. The following energy related measurements were made by the audit team and plant personnel.

1. The pipe surface temperature was measured with an infrared digital non-contact pyrometer and pipe dimensions were recorded.

2. Combustion efficiency tests were run on the boilers to demonstrate the use of the measuring instrument and to collect data on the boiler operations.

3. The infrared temperature instrument was used to measure temperatures of the windows for single pane and double pane glass and calculations were made to determine the overall heat transfer coefficients.

4. The ultrasonic flow meter was demonstrated on Friday. Flow tests were made on a hot water unit heater in area no. 2.

On Friday, the audit team and Mr. Erickson presented the recommendations at a meeting attended by Mr. Crepp, Mr. Medved, Mr Bruzko, two people from ElektroProjekt, and four people from the state agencies who had been at the plant for part of the week. The energy

audit team's presentation was well received and included an explanation of the funds available to implement the recommendations. The recommendations were discussed at the meeting and included the details of the time schedule for implementation.

The manager, Mr. Crepp, concurred with the recommendations and will send a letter to Mr. Foell, President of RMA, as requested by Mr.Erickson.

4.0 Summary of Results

As a result of the energy audit, several short and long-term energy conservation opportunities were identified. Short-term projects are characterized by low or no cost to implement with short payback periods. These projects could be implemented in two months. Long-term projects are characterized by a larger cost to implement and with longer payback periods.

4.1 Short-Term Energy Conservation Opportunities

The following short-term energy conservation opportunities were identified.

Uncontrolled Building Heating: Inspection of buildings no. 1 & 2 showed that these spaces used for manufacturing are heated by hot water unit heaters. The heaters are controlled with manual valves and the building overheats. Automatic control valves on the units will save an estimated 5 percent of the energy used for space heating of these buildings (see Appendix A). The savings is estimated at 10,796 GJ/yr at a cost savings of 669,352 Kcs. The estimated cost to purchase and install the valves is 952,000 Kcs. The payback for this change is 1.4 years.

Uninsulated Piping: A number of uninsulated pipes containing hot water were observed. The majority of the plant piping is adequately insulated. Using pipe surface temperature measurements and surface area, the heat loss from the uninsulated pipe was estimated to be 1929 GJ per year (see Appendix C). The audit team estimates that only 50 percent of the total plant uninsulated pipe was measured and included in this calculation. Piping such as hot water distribution to space heaters and hot water control valves should all be insulated to reduce heat loss. Reinstallation of insulation after piping repairs should be part of maintenance activities.

Heat loss from hot water distribution space heating lines contributes to the overheating of rooms. When this occurs, plant personnel open windows to provide control. This results in an additional source for heat loss. Insulation is a simple, low cost task which would save 118 metric tons of coal per year. Payback for this project would be good: less than 2.6 years with an estimated material and labor cost of 215,475 Kcs. The recommended pipe insulation should consist of a minimum of 3.8 centimeters of fiberglass insulation and cover. The observed plant pipe insulation, which consists of fiberglass wrapped with aluminum foil and chicken wire, would be an acceptable insulation system.

Increase Boiler Efficiency By Reducing Excess Air: Excessive boiler flue gas energy losses due to high levels of excess air can be reduced by routine combustion efficiency monitoring with a combustion analyzer and manual adjustment of the boiler combustion controls. As part of the inspection and training aspect of this project, boiler combustion analyses were

conducted using the Enerac 2000 combustion analyzer. Results of the analyses are contained in *Tables 4 and 5.*

The combustion efficiency of the new boiler firing a mixture of sized and powder brown coal is poor due to the high combustibles concentration, carbon monoxide concentrations and the high excess air level. Note that the old boiler No. 3, firing sized brown coal is able to achieve lower levels of combustibles and carbon monoxide. The poor combustion performance in the new boiler could be attributed to the high levels of excess air and the quality of the coal. With this type of boiler and burner equipment, lower excess air levels are expected. By reducing excess air levels from 600 percent to 500 percent, the fuel saved would be 714 metric tons of coal per year (as shown in Appendix D). The original plans for the power house included a combustion monitor that was never installed. Mostaren tunes the new boiler once per year but could benefit from having a portable combustion analyzer to conduct more frequent monitoring and boiler combustion control adjustment. In this way, high excess air levels in the boiler, caused by variations in the fuel composition and wide range of firing rates, could be avoided. The cost for a portable combustion analyzer to measure flue gas oxygen, carbon dioxide, carbon monoxide, and temperature is estimated to be 405,000 Kcs, with annual fuel savings of 504,206 Kcs, this would result in a payback of less than one year.

Single Pane Windows: Single pane windows are present in buildings no. 1 & 2. Installation of an additional pane of glass will result in a lower heat loss and improved comfort conditions in the building. The glass can be obtained locally and installed by the owner; thickness and quality should match the existing glass. The heat saved from this change will amount to 8708 GJ/yr, as shown in Appendix B. The total annual savings will be approximately 540,000 Kcs, or 50.8 Kcs/m^2 of glass area. The cost to purchase and install extra panes of glass is estimated at 200 Kcs/m^2, so payback would be 3.9 years.

Table 4. Combustion Analysis, Old Coal-fired Boiler No. 3

Parameter	Average Measurement
Combustion Efficiency, %	53.5
Ambient Temperature, °C	11
Flue Temperature, °C	117.5
Net Flue Temperature, °C	106.5
Oxygen Concentration, %	18.4
Carbon Monoxide Concentration, mg/m^3	197.5
Carbon Dioxide Concentration, %	2.1
Combustible gases, %	0.05
Stack Draft, mm H_2O	-142
Excess Combustion Air, %	675
Nitrogen Oxides, mg/m^3	28.5
Sulfur Dioxide, mg/m^3	177.5
Smoke Spot, Bacharach number 0-9	2
Firing Rate, metric ton steam/hr	17.7
Steam Pressure, MPa	0.42
Steam Temperature, °C	155

Table 5. Combustion Analysis, New Coal-Fired Boiler

Parameter	Before Comb. Air Preheat	After Comb. Air Preheat	After E.S. Filter
Combustion Efficiency, %	34.6	35.7	42.7
Ambient Temperature, °C	20.5	14	14
Flue Temperature, °C	141	127	119
Net Flue Temperature, °C	121	113	105
Oxygen Concentration, %	18.1	18.1	18.1
Carbon Monoxide Concentration, mg/m^3	1422	1397	1394
Carbon Dioxide Concentration, %	2.4	2.4	2.4
Combustible gases, %	0.3	0.3	0.26
Stack Draft, mm H_2O	-29	-72	-89
Excess Combustion Air, %	619	621	576
Nitrogen Oxides, mg/m^3	48	44	59
Sulfur dioxide, mg/m^3	165	265	252
Smoke Spot, Bacharach number 0-9	6.5	5.5	2.5

Firing Rate (MW): 4.96 through 7.45

4.2 Long-Term Recommendations

The following long-term energy conservation opportunities were identified.

Boiler Operation Improvements: The boiler flue gas energy losses could be further reduced by the addition of combustion air modulation controls. The combustion air currently does not modulate when the firing rate of the boiler changes. This results in high excess air at low firing rates and flue gas energy losses. Modulated combustion air would reduce flue gas energy losses at reduced firing rates. It is understood that with the low grade coal currently being used, the excess air level may have to remain high to attain proper combustion of the fuel. Mostaren should consider using a higher grade brown coal which would enable reduced excess air levels and less flue gas energy losses.

Addition of a Small Boiler: Summer and fall steam requirements show that the required hourly boiler capacity is considerably less than 34.8 MW. Mostaren should further consider installing a 10 to 15 MW boiler. The small boiler could handle the low summer season heating demand, and the large boiler would operate during the fall and winter. This is a common strategy to optimize multiple boilers and each boiler's efficiency versus the load demand. For example, a 35 MW boiler operating at 15 MW output would typically have a 75 percent overall efficiency, whereas a 15 MW boiler operating at 15 MW typically has an 80 percent efficiency. Potential fuel savings over a six month period each year would be 191 metric ton/yr (134731 Kcs/yr).

Air Compressor Heat Recovery: The present air compressor system rejects all of the heat removed from the compressors to the outdoors by means of a cooling tower. Recovery of this heat is a potential long-term recommendation. The heat could be used to heat the air compressor building.

Office Building Uncontrolled Heating: The addition of control valves for the office buildings should be investigated. It is a long-term recommendation with an estimated payback of 2 to 3 yrs.

Reduced Service Hot Water Supply Temperature: The service hot water supply temperature of 72 °C is not necessary, nor desirable, except for the water serving the kitchens. Above 50 °C, water is too hot to touch directly. Approximately 25 percent more energy is required to heat water to 72 °C instead of 50 °C. Additionally, service hot water piping losses will add 30 percent more of the required energy for heating domestic water. If the hot water tanks are properly sized, the domestic hot water supply temperature can be reduced to 50 °C without affecting comfort.

5.0 Plant Management/Organization

Mostaren has projects under way to modify and change the plant. Plant management recognizes the need to improve energy efficiency. Plans are on hold to add two natural gas boilers due to the uncertainty of the future demand for the company's products.

A formal energy conservation program to carry out both long and short-term energy conservation measures is not presently operating at the plant, but is needed. Management is in the process of restructuring divisions within the company. Divisions or profit centers will be held accountable for their energy utilization. This will allow the managers to identify energy costs and create an incentive to reduce cost, and will provide an opportunity to train people in the plant to recognize the importance of energy savings. Management needs to identify people responsible for training and implementing an energy conservation program.

6.0 Implementation Evaluation

6.1 Combustion Analyzer

A visit was made on July 31, 1991 to the plant by Mr. Erickson, Mr. Dries and Mr. Anderson. The Enerac combustion analyzer was delivered and unpacked. The unit was then started and demonstrated to the Power Engineer, Mr. Medved, the Technical Director, Mr. Buzgo and two additional people who will use the unit.

Additional items needed for the unit were as follows:

- A moisture trap with desiccant.
- An extra bottle of desiccant.
- A 25 foot cable with RJ-11 male plugs on each end.
- A DB-25 cable with a male plug on one end for the Enerac and a DB-25 plug to fit the serial port of a PC computer.

The above items have since been delivered to the plant.

During the demonstration the temperature sensed by the unit probe in the room air and the room ambient sensed by the unit changed over a two hour period. During this time the room temperature was 24-25 °C. The Enerac measured temperatures close to this at the start of the period but at the end showed temperatures of 32-33 °C.

A fax was sent to Energy Efficiency Systems to get advice on the temperature problem and also to obtain information on how to input a non-standard fuel heating value in the unit. Also requested was information on how to allow English words on the LCD display to be changed to Czech and Slovak. Energy Efficiency Systems responded with instructions on warming up the unit properly, to avoid the temperature problem. A set of accessories is advisable for entering non-standard fuel parameters in the unit. Displaying LCD information in Czech or Slovak is not feasible within the budget of this project.

Another visit on Friday August 2, 1991 was made to work with the Enerac and to review the installation of the heating control valves. These valves were shipped via a Mostaren truck on August 1 from Prague.

6.2 Combustion Instrumentation

The problem of temperature drift was not as bad as on July 31. The Enerac was used to measure combustion conditions on one of the old coal fired boilers. These boilers are being shut down in the near future. Tests were made to demonstrate the use of the unit and to check for carbon monoxide and carbon dioxide in the boiler room. The boiler efficiency was low, about 50%. Photograph number 1, in Appendix G, shows the test location.

One measurement was made about 18" above the burning fuel bed through a door about 6 x 12". The results were not valid because of the location and the room air being drawn into the boiler through the 6 x 12" opening. The Power Engineer, Mr. Medved, was advised that the location and opening size into the boiler needed to be as recommended by the Enerac manufacturer.

The accessories requested for entering parameters for the types of fuel burned at Mostaren have been sent to the plant since the implementation phase, along with full instructions on how to carry out this process. A calibration kit for the Enerac has also been supplied to the plant. This was purchased with the original machine, but delivery was delayed because of the difficulty of shipping the hazardous gasses in the kit.

6.3 Heating Control Valves

The valves pipe nipples and flanges were inspected, and installation was discussed with the plant personnel who will install the valves. Photograph number 2, in Appendix G, shows a typical valve. The valves will be installed in the production halls. These halls have metering stations to measure flow and heat used in each hall. The stations are not in operation, but could be operated to monitor the heat used after the new control valves are installed.

The roof has numerous exhaust fans to exhaust fumes from welding. These openings do not have dampers that can be closed off when the plant is not operating or when the exhaust required is low and only a few fans are needed. Installation of dampers will provide an additional savings in heat and should be carried out as soon as possible. The control valves are to be installed before the start of the heating season.

The responsibility for energy conservation has been given to the Power Engineer.

APPENDIX A
Calculations for Uncontrolled Building Heating

Table A1. Buildings and Spaces (Partial listing)

Building or Space Number & Use		Building Area Square Meters	Building Volume Cubic Meters
1	Fabrication	16,800	226,500
2	Production	3,990	63,000
3	Offices	3,618	12,000
4	Production	15,620	189,100
5	Production	1,080	189,000
6	Production	880	4,500
7	Office	6,000	22,500
8	Office	3,360	13,104
9	Office	840	4,200

Note: Building numbers are as shown on the site plan. The numbers are enclosed in square boxes.

Sample Calculations for Uncontrolled Building Heating

Building areas 1 and 2 are used as manufacturing spaces and the principal activities are cutting, bending, welding of steel members and plates approximately 1.5 inches thick, and machining of steel with lathes, planers, milling machines, gear cutters, drill presses etc.

The estimated heat loss for the building is 11,767.2 kW. This equals 3400 x 11,767.2 = 40,000,000 BTU/hr. This data was from a report furnished by the plant. A table of values from the report is included in this Appendix.

Heat is supplied by 147 unit heaters, almost all piped as two units from a single set of branch piping from the mains. About 85 automatic temperature regulating control valves would be required. The present system is manually controlled. The estimated capacity of each unit heater is estimated to be 250,000 BTU/hr to 275,000 BTU/hr. At a 10 percent savings of heat due to automatic control of the unit heaters, the estimated heat loss of 30,106 Mw/yr will be reduced by 0.10 X 30,106 = 3010 MW/yr.

This is equal to 3010 x 3.4 x 1,000,000 x 1,005 = 10,796 GJ/yr
Fuel cost savings = 62 Kcs/GJ x 10796 = 669,352 Kcs/yr

The cost of 91 automatic control valves is estimated to be:

91 x 11,200 Kcs/valve = 952,000 Kcs

The payback equals 2 yrs.

Buildings 3 and 7 are offices also with uncontrolled heating. There are more radiators per square meter than in buildings 1 & 2, so there will be a longer payback; estimated at 2 to 3 years.

Control valves for this application should be valves that are self contained and have a thermostatic operator. This type of valve doesn't require electric power to operate. The size range is 1-1/2 to 2 inch nominal pipe size and flow from 20 to 22 gpm. Some valves may require a remote sensor. The pressure is 1.2 MPa (176 psig) and the pressure drop across the valve about 10 psi maximum. The maximum operating temperature is 300°F (160 °C).

Manufacturer's control valve data sheets for this application are in this Appendix. A Trerice "Ambi-Reg" style valve manufactured by Johnson Controls, Trerice, Jordan or Ogontz Corporation is acceptable.

26 Mar 91

ŠTUDIE

snižování energetické náročnosti na s.p. Mostárna Brezno

Racionalizace spotřeby tepla horkovodního vytápění 160/90°C.

ARCHIV

Vypracoval: Bukálek	Vedoucí odboru: Ing. Malík	Název: Sestavení bilance potřeb tepla a ukazatelů
Projektant: Bukálek	Hl. inž. projektu:	
Vedoucí útv.: Ing. Müller		
Techn. kontrola: Ing. Müller	TNV: Ing. Manoušek	
	Datum pořízení: 10/89	Kto: 2767 - 901 - 000
HUTNÍ PROJEKT PRAHA projekční a inženýrská organizace ZÁVOD OSTRAVA	HP 27 - 6 - 28891	Celk. počet listů 1/8

31

MOSTÍRNA BŘEZNO – STÁTNÍ PODNIK

NP 27-6-28891

IČO: 2767-001-000

SESTAVENÍ BILANCE POTŘEB TEPLA A UKAZATELE HORKOVODNÍHO VYTÁPĚNÍ 180/90°C

Čís. obj.	Název	① Tepelný příkon max kW.h⁻¹	② Vytápěný prostor m³	③ Měř. teplo na 1 m³ vytáp. prostoru W.h⁻¹.m⁻³	④ Vnitř. tepl. v objektu °C	⑤ Tepelný příkon za rok MW.r⁻¹	⑥ Hmotnost. průtok max kg.h⁻¹	Nárůst max. tepelného příkonu v roce 1990 kW.h⁻¹	1990 MW.r⁻¹	2000 kW.h⁻¹	2000 MW.r⁻¹	2005 kW.h⁻¹	2005 MW.r⁻¹	Poznámka
	STÁVAJÍCÍ STAV						110 600							
1	Hala č. 1 a rozšíření	9002,3	226 500	39,7	16	23 032	33 969							Zavedení M+R cirkul. způsob + přenos dat do velínu
2	Sezárna haly č. 1	2764,9	63 000	43,9	16	7 074	5 715							Zavedení M+R cirkul. způsob + přenos dat do velínu
3	Soc. přístavek haly č. 1	465,2	12 600	38,8	20	1 083	86 786							Stáv. ekviterm. regul. vč. TUV. Zavést M+přenos dat do v
4	Hala č. 2	7064,0	189 100	37,4	16	17 825	1 457							Zavedení M+R cirkul. způsob + přenos dat do velínu
5	Tech. přístavek haly č. 2	118,6	4 500	26,4	16	303	3 573							Zaved. M+R cirkul. způsobem z haly 2+přenos dat do velínu
6	Soc. přístavek haly č. 2	290,8	9 045	32,1	20	636	10 429							Stáv. ekviterm. regul. vč. TUV Zavést M+přenos dat do velín
7	Admin. budova stará	848,9	22 500	37,7	20	2 502	6 002							Stáv. ekviterm. regul. vč. TUV Zavést M+přenos dat do velín
8	Admin. budova nová	488,5	13 104	37,3	20	953	1 824							Stáv. ekviterm. regul. vč. TUV Zavést M+přenos dat do velín
9	Zdrav. střed. – administr. bud.	148,5	4 200	35,4	20	438	3 750							Připoj. na vým. stanici staré admin. budovy
10	Garáže	145,4	3 750	38,8	5-20	271	660							Připoj. na vým. stanici staré admin. budovy
11	Požární zbrojnice	57,3	1 300	41,3	18	148	1 800							Připoj. na vým. stanici staré admin. budovy
12	Jídelna a kuchyň	146,5	4 520	32,4	20	350	2 866							Stáv. ekviterm. regul. vč. TUV Zavést M+přenos dat do velín
13	Výpočetní středisko	233,3	3 923	59,5	20	543	2 386							Stáv. ekviterm. regul. vč. TUV Zavést M+přenos dat do velín
14	Budova lidových milicí	194,2	3 088	62,9	20	572	4 283							Nepřetržitý provoz. Zavést jen M+přenos dat do velínu
15	Sociální budova při 1M	348,6	8 417	41,4	20	812	257							Stáv. ekviterm. regul. vče. TUV Zavést M+přenos dat do velín
16	Trafostanice č. 1	20,9	3 300	6,3	15	51	2 285							M+R nebude instalováno
17	Remíza lokomotiv	186,0	3 000	62	18	514	714							Nepřetržitý provoz. Zavést jen M+ přenos dat do velínu
18	Acetylenová stanice	58,1	650	89,4	16	149	214							Zavést jen M+Přenos dat do velínu
19	Kyslíková stanice	17,4	770	22,6	16	45	2 144							M+R nebude instalováno
20	Kotelná stará	174,5	6 500	26,8	15	427	1 286							Nepřetržitý provoz. Zavést jen M+přenos dat do velínu
21	Soc. přístavek kotelny	104,7	2 000	52,3	20	309	153							Stáv. ekviterm. regul. vč. TUV Zavést jen M+přenos dat do v
22	Čerpací stanice	12,3	240	51,2	10	22	11 365							M+R nebude instalováno
23	Experimentální zkušebna-dílna	908,6	31 000	29,3	18	2511	15096							Zavedení M+R cirkul. způsobem +přenos dat do velínu

22

MOSTÁRNA BREZNO - STÁTNÍ PODNIK

HP 27-6-28221

Sestavení bilance potřeb tepla a ukazatelů horkovodního vytápění 160/90°C

kto: 2757-901-000

Čís. obj.	Název	Tepelný příkon max $kW.h^{-1}$	Vytápěný prostor m^3	Měř. tepla v m^3 vytáp. prostoru $W.h^{-1}.m^{-3}$	Vnitřní teplota v obj. °C	Tepelný příkon za rok $MW.r^{-1}$	Hmotnost. průtok vody $kg.h^{-1}$	Nárůst max. tepelného příkonu v roce 1990 $kW.h^{-1}$	1990 $MW.r^{-1}$	2000 $kW.h^{-1}$	2000 $MW.r^{-1}$	2005 $kW.h^{-1}$	2005 $MW.r^{-1}$	Poznámka
24	Exp. zkušebna - soc. přístavek	437,0	18 000	43,7	20	1 018	6 244 5 369							Stáv. ekviterm regul. vč. TUV Zavést jen M+přenos dat do v
25	Zdravotní středisko	170,0	7 170	23,7	20	332	2 089							Stáv. ekviterm. regul. vč. TUV Zavést M+přenos dat do velí
26	Kotelna K1 (nová - st. č. 1)	1089,0	33 434	32,6	15	2 664	13 379							Nepřetržitý provoz. Zavést jen M+přenos dat do velínu
27	Budova vstupní trafostanice	149,8	4 417	33,9	15	366	1 840							Nepřetržitý provoz. Zavést jen M+přenos dat do velínu
28	Stolařská dílna	482,0	7 628	63,2	18	1 041	5 922							Stáv. ekviterm. regul. vč. TUV Zavést M+přenos dat do velí
29	Sociální přístavek	195,0	3 020	64,6	20	421	2 396							Stáv. ekviterm. reg. vč. TUV Zavést jen M+přenos dat do vel
30	Budova kompresorů	316,0	4 242	74,5	10	558	3 882							Zaved. M+R ekviterm. způsobem +přenos dat do velínu
31	Budova povrchových úprav	2808,8	69 926	41,2	16	7 186	34 508							Zaved. M+R cirkul. způsobem +přenos dat do velínu
32	Budova meziskladu	2070,0	50 310	41,1	15	5 296	25 431							Zaved. M+R cirkul. způsobem + přenos dat do velínu
33	Spojovací krček	971,0	23 593	41,2	16	2 464	11 929							Zaved. M+R cirkul. způsobem + přenos dat do velínu
	Stáv. stav vytápění celkem	12188,1				21 936								

33

MOSTÁRNA BREZNO – STÁTNÍ PODNIK

Sestavení bilance potřeb tepla a ukazatelů horkovodního vytápění 160/90°C

HP 27 – 6 – 28891
Kto: 2767 – 901 – 000

Čís. obj.	Název	Tepelný příkon max. kW.h⁻¹	Vytápěný prostor m³	Potř. tepla na m³ vytáp. prostoru W.h⁻¹.m⁻³	Vnitř. tepl. v objektu °C		Hmotnost. průtok vody kg.h⁻¹	Nárůst max. tepelného příkonu v roce 1990 kE.h⁻¹	1990 kW.r⁻¹	2000 kW.h⁻¹	2000 MW.r⁻¹	2005 kW.⁻¹	2005 MW.r⁻¹	Poznámka
	Provoz r. 1990													
34	Přístavek výpočetního střediska	70,0	2030	34,5	20		860	70,0	163					
35	Svářečská škola	311,0	3152	98,7	18		3820	311,0	532					
36	Hala spec. techniky – hala č.3	4103,5	169033	21,7	16		50414	4103,5	7646					
37	HST – sociální budova	601,0	9984	60,2	20		7384	601,0	1400					Zajistit možnost doplnění
38	HST – pom. provozy ext. mont.	713,0	25732	27,7	16		8760	713,0	1329					zařízení M+R pro přenos dat
39	HST – rekonstr. skladu plechu	1783,7	41732	42,7	16		21914	1783,7	3324					do centrálního velínu
40	HST – Předúprava profilů	660,0	25445	26	16		8109	660,0	1230					
41	HST – Hala skladu olejů	127	3087	41,1	10		1560	127,0	131					
42	HST – Investiční sklad	174,8	6169	28,3	16		2148	174,8	283					
43	Soc. přístavek expedič. skladu	34,0	777	43,7	20		418	34,0	79					
	Nárůst r. 1990 celkem							8578,0	16 111					
	Výhled do r. 2000													
44	Dostavba zdroje tepla	204,0	6336	32,2	10		2506			204,0	360			
45	Čerpací stanice prům. vody	55,6	1728	32,2	10		683			55,6	98			
46	Desmulgační stanice	57,4	1782	32,2	10		705			57,4	56			Provoz do r. 1995
47	Garáže nákladní dopravy	132,5	5000	26,5	15		1628			132,5	105			
48	Nadstavba požár. zbrojnice	28,3	648	43,7	20		348			28,3	83			
49	Učňovské dílny	543,6	27591	34,2	18		11593			943,6	1927			
50	Učňovské dílny – soc. přístav.	341,8	7812	43,7	20		4199			341,8	774			Provoz do r. 2000
51	Ústřední sklad materiálu	3538,0	115488	30,6	10		43467			3538,0	4569			
52	Staveb. dvůr – soc. budova	165,6	3790	43,7	20		2209			165,6	334			

MOSTÁRNA BŘEZNO - STÁTNÍ PODNIK
sestavení bilance potřeb tepla s ukazatelů
horkovodního vytápění 160/90°C

Čís. obj.	Název	Tepelný příkon max. $kW.h^{-1}$	Vytáp. prostor m3	Potř. tepla na m3 $W.h^{-1}.m^{-3}$	Vnitřní teplota objektu °C		Hodinová spotřeba páry $kg.h^{-1}$	Nárůst max tepelného příkonu v roce 1990 $kW.h^{-1}$	1990 $kW.r^{-1}$	2000 $kW.r^{-1}$	2000 $MW.r^{-1}$	2005 $kW.h^{-1}$	2005 $MW.r^{-1}$	Poznámka
53	Rekonstrukce záv. kuchyně	188,2	4 320	43,7	20		2320			188,2	450			Provoz do r. 2000
	Výhled od r. 1991 - 2000 celkem									5655,0	8755			
	Výhled do r. 2005													
54	~~DKF~~ - Dopravní střed. a servis	742,7	20530	36,0	18		9125					742,7	1320	
55	Vstupní areál	530,0	12128	43,7	20		6511					530,0	1034	Provoz do r. 2005
56	Sklad přípravků	641,5	17820	36,0	16		7881					641,5	638	
57	Třískové hospodářství	88,0	2250	39,1	16		1081					88,0	133	
	Výhled od r. 2001 - 2005 celkem											2002,2	3125	

Kto: 2767 - 901 - 000

HP 2767 - 901 - 000 5

35

MOSTÁRNA BREZNO - STÁTNÍ PODNIK

sestavení bilance potřeb tepla pro ohřev TUV - horká voda 160/90°C

Čís. obj.		stáv. stav r. 1989		Nárůst max. tepel. příkonu v roce 1990		2000		2005		Poznámka
		kW.h^{-1}	kW.r^{-1}	kW.h^{-1}	kW.r^{-1}	kW.h^{-1}	kW.r^{-1}	kW.h^{-1}	kW.r^{-1}	
3	Soc. přístavek haly 1	150	240							
6	Soc. přístavek haly 2	300	660							
10	Garáže	-	-							4.el. zásobníky á 250 l
11	Požární zbrojnice	-	-							El. zásobník 120 l
12	Jídelna a kuchyň	-	-							← 812,0 kW.h^{-1} - po r. 199 převedeno na zemní plyn
15	Soc. budova při LM	175	385							
20	Kotelna stará	-	-							El. zásobník 250 l
21	Soc. přístavek kotelny	-	-							3 el. zásobníkyá 250 l
24	Exp. zkuš. - soc. přístavek	70	126							
25	Zdravotní středisko	45	49							
26	Kotelna K 1 (nová - st. č. 1)	60	88							
29	Sociální přístavek	25	30							

Nákres 2767 - 901 - 000

HP 27 - 6 - 28891

List 6

MOSTÁRNA BREZNO - STÁTNÍ PODNIK

sestavení bilance potřeb tepla pro ohřev TUV - horká voda 160/90°C

Čís. obj.	Název	Stáv. stav r. 1989		Nárůst max tepel. příkonu v roce 1990		2000		2005		Poznámka
		$kW.h^{-1}$	$MW.r^{-1}$	$kW.h^{-1}$	$MW.r^{-1}$	$kW.h^{-1}$	$MW.r^{-1}$	$kW.h^{-1}$	$MW.r^{-1}$	
34	Přístavek výp. střediska	-	-	15	30					
35	Svářečská škola	-	-	20	20					
37	HST - soc. přístavek	-	-	80	175					
54	HPP - doprav. středisko	-	-	-	-	-	-	25	30	
	Celkem	825	1578	115	225			25	30	

Název 2767 - 901 - 000

HP 27 - 6 - 28891

List 7

MOSTÁRNA BREZNO - STÁTNÍ PODNIK

sestavení bilance potřeb tepla pro technologii - horká voda 160/90° C

Č. obj.	Název	stáv. stav r. 1989		Nárůst max. tepel. příkonu v roce 1990		2000		2005		Poznámka
		kW.h^{-1}	MW.r^{-1}	kW.h^{-1}	MW.r^{-1}	kW.h^{-1}	MW.r^{-1}	kW.h^{-1}	MW.r^{-1}	
20	Vlastní spotřeba kotel.	1337,4	9629							
28	Stolářská dílna	232,1	1114							
31	Budova povrch. úprav střík. a sušící boxy	8140,0	31339							
36	zastřešení jeř. dráhy HST - sušárna			1120,0	4402					
36	HST - řezárna			1430,0	4719					
39	HST - Rek. skladu plechů			1120,0	4402					
4	Stříkací boxy v hale 2					2925,0	11261			
54	HPP - Dopr. středisko a servis							250,0	525	
		9709,5			13523		11261	250,0	525	
			42082	3670,0		2925,0				

Název 2767 - 901 - 000

HP 27 - 6 - 28891

List 8

28

presenting . . . .

THE Trerice
AMBI-REG

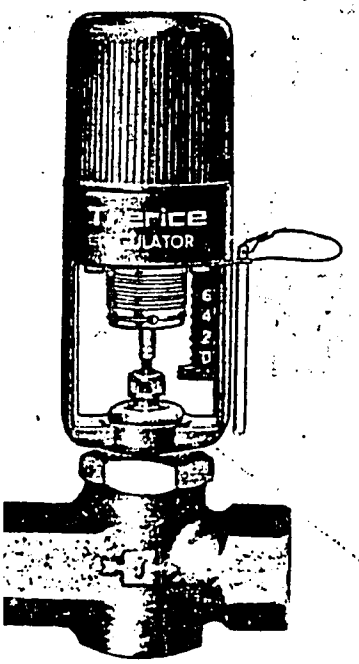

A SELF-CONTAINED TEMPERATURE
CONTROL VALVE FOR USE ON
PLANT STEAM TRACER LINES

H. O. Trerice Co.

MANUFACTURERS OF
TEMPERATURE & PRESSURE INSTRUMENTS

BULLETIN NO. 50[illegible]

DISTRIBUTED BY:

Trerice

AMBI-REG

SELF-OPERATING TEMPERATURE REGULATOR

APPLICATION

The TRERICE AMBI-REG TEMPERATURE CONTROL VALVE has been designed to sense the ambient temperature of its immediate environment. It is therefore ideally suited for installation on steam tracer lines providing protection against freezing for outside pipelines, storage tanks, and plant instrumentation. It can be also used on other types of equipment where control is based on ambient temperature. The AMBI-REG is totally self-contained and performs its control function without an external power source such as electricity or plant air. Requiring little or no maintenance once installed, the TRERICE AMBI-REG SELF-CONTAINED TEMPERATURE REGULATOR can be relied upon to provide years of accurate, uninterrupted service, and continued energy savings.

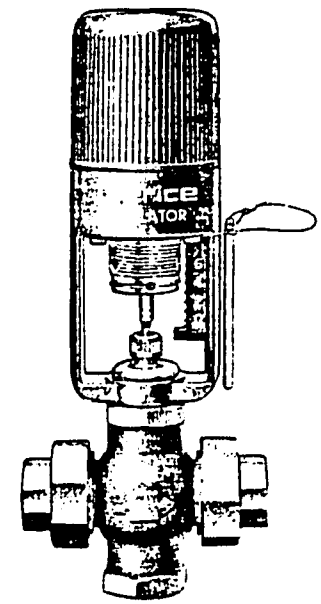

FEATURES

The TRERICE AMBI-REG REGULATOR when installed on your steam tracer lines will provide:

- – – ENERGY SAVINGS.
- – – PROTECTION AGAINST COSTLY FREEZE-UPS.

And because of its self-contained design will

- – – CUT DOWN ON MAINTENANCE COSTS.
- – – PROVIDE IN LINE SERVICIBILITY.

CONSTRUCTION

The TRERICE AMBI-REG is ruggedly built. The yoke and cap are heavy aluminum castings. Lifetime lubrication is incorporated in the adjustment screw bushing. The teflon valve packing is also self-lubricated. The adjustment spring and thermal system bellows are enclosed and protected from corrosive conditions. This regulator has been designed to insure its user years of trouble free service.

SPECIFICATIONS

The TRERICE AMBI-REG can be ordered with the following standard specifications.

PORT SIZES: ⅛", 3/16", ¼", 3/8", ½", ¾", 1", 1¼", 1½", 2".

VALVE MATERIAL AND END CONNECTIONS: Bronze body, union ends – ½" thru 2", Cast steel body, screwed ends – ¾" and 1", Bar stock valve in brass, steel, 304 and 316 S.S. – ¼".

TRIM AND ACTION: Single seated, stainless steel trim, decrease in temperature causes the valve to open.

CONTROL RANGE: 20 to 70°F (–10 to 20°C) standard. For other ranges consult factory.

NOTE: OTHER VALVE BODY MATERIALS, SIZES, TRIMS, ACTIONS, AND CONTROL RANGES ARE AVAILABLE ON SPECIAL ORDER. CONTACT YOUR LOCAL TRERICE REPRESENTATIVE OR CONSULT THE FACTORY.

-40

Trerice ACTUATOR AND VALVE SELECTION CHART

AMBI-REG ACTUATORS		
RECOMMENDED	**RANGE**	**NUMBER**
Freeze Protection 40 to 70°F.	20 to 70°F.	EA01

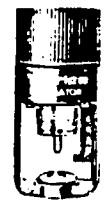

Actuator

VALVES SINGLE SEAT – STAINLESS TRIM – TO CLOSE WITH TEMPERATURE RISE				
BODY MATERIAL	**NPT CONN.**	**SIZE**	**NUMBER**	
BRONZE Malleable Union Ends NPT Threads	½"	⅛"	164-0063.11A	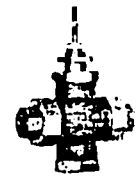 Bronze Bodied Valve Assembly
		3/16"	164-0063.9A	
		¼"	164-0063.7A	
		⅜"	164-0063.5A	
		½"	164-0063.2A	
	¾"	¾"	164-0064.2A	
	1"	1"	164-0065.2A	
	1¼"	1¼"	164-0066.2A	
	1½"	1½"	164-0067.2A	
	2"	2"	164-0068.2A	
STEEL THREADED ENDS	¾"	⅛"	164-0148.1A	 Cast Steel Valve Assembly
		3/16"	164-0148.2A	
		¼"	164-0148.3A	
		⅜"	164-0148.4A	
		½"	164-0156.1A	
		¾"	164-0153.1A	
	1"	⅛"	164-0148.51A	
		3/16"	164-0148.52A	
		¼"	164-0148.53A	
		⅜"	164-0148.54A	
		½"	164-0154.1A	
		¾"	164-0155.1A	
		1"	164-0152.1A	

MAXIMUM PSID SHUT OFF DIFFERENTIAL	
⅛" thru ½"	250
¾"	140
1"	80
1¼"	50
1½"	35
2"	20

EXAMPLE OF HOW TO ORDER
EXAMPLE: To order a ¾" bronze body TRERICE AMBI-REG, add proper valve number to actuator number EA01. Proper ordering number is EA01 with 164-0064.2A.

BAR STOCK BODY AMBI-REG AVAILABLE ONLY AS A COMPLETE UNIT AS LISTED		
BODY MATERIAL	**NUMBER**	
Steel	ENL25F01	Not Available As Separate Actuator or Body
Brass	ENK25F01	
303 Stainless Steel	ENM25F01	
316 Stainless Steel	ENN25F01	

Bar Stock Valve

NEW

"ENERGY CONSERVING"

"ANTI-FREEZE PROTECTION"

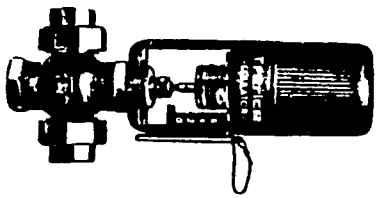

THE AMBI-REG AMBIENT SENSING CONTROL VALVE

H.O. Trerice Co.
[illegible] W. Eight Mile Rd.
Detroit, Mich. 48237
ADDRESS CORRECTION REQUESTED

HOME OF AND FACTORY

H.O. Trerice Co.

12[illegible] W. EIGHT MILE RD.
DETROIT, MI, U.S.A. 48237
PHONE: (313) 369-6030
TELEX NO. 671[illegible] HO TRERICE - FAX NO. 313[illegible]

FACTORY BRANCH OFFICES

ATLANTA OFFICE
120 W. Wieuca Rd., Suite 205
Atlanta, GA 30342
Phone: (404) 256-4183

BOSTON OFFICE
633 Trapelo
Waltham, MA 02154
Phone: (617) 893-6153

CHICAGO OFFICE
2525 E. Oakton, Suite D-43
Arlington Hgts, IL 60005
Phone: (312) 640-8440

CLEVELAND OFFICE
4407 Brookpark Rd.
Cleveland, OH 44134
Phone: (216) 749-4100

COLUMBUS OFFICE
1735 Soshoni
Circleville, OH 43113
Phone: 614) 224-3313

DALLAS OFFICE
1140 Empire Central Place, Suite 104
Dallas, TX 75247
Phone: (214) 637-3375

FLINT OFFICE
129 N. Corbin
Holly, MI 48442
Phone: (313) 234-5603

INDIANAPOLIS OFFICE
3512 Rockville Rd., Suite 119B
Indianapolis, IN 46222
Phone: (317) 243-7371

KALAMAZOO OFFICE
2504 Main St.
Kalamazoo, MI 49007
Kalamazoo: (616) 388-3831
Grand Rapids: (616) 235-0550

LOS ANGELES OFFICE
7625 Rosecrans Ave., Suite 2
Paramount, CA 90723
Phone: (213) 633-3936

MILWAUKEE OFFICE
N58 W18335 Juniper Lane
P.O. Box 884
Menomonee Falls, WI 53051
Phone: (414) 252-3677

NEW ORLEANS OFFICE
950 Manson Rd.
Marrero, LA 70072
Phone: (504) 340-4981

NEW YORK OFFICE
1430 Bergen Blvd.
Fort Lee, NJ 07024
Phone: (201) 461-7035

PHILADELPHIA OFFICE
1325 O'Reilly Rd., Suite 3
Feasterville, PA 19047
Phone: (215) 364-5156

ST. LOUIS OFFICE
6973 Chippewa
St. Louis, MO 63109
Phone: (314) 645-5449

TAMPA OFFICE
5700 Memorial Hwy., Suite 113
Tampa, FL 33615
Phone: (813) 884-8130

TOLEDO OFFICE
5249 Secor Rd.
Toledo, OH 43623
Phone: (419) 473-2601

CANADIAN HEAD OFFICE & FACTORY

H.O. Trerice Co.

1935 HURON CHURCH RD.
WINDSOR, ONT., CANADA N9C 2L9
PHONE: (519) [illegible]
FAX NO. [illegible] - TELEX NO. [illegible]

MONTREAL OFFICE
415 Bourke Ave., Suite 154
Dorval, Quebec H9S 3W9
Phone: (514) 636-9110
TELEX NO. 05822686

TORONTO OFFICE
2395 Cawthra Rd.
Mississauga, Ont. L5A 2W8
Phone: (416) 276-2340
TELEX NO. 06961443

INDUSTRIAL THERMOMETERS

Furnished in 5, 7, 9 & 12" scale cases with standard ranges between −40 & 1000°F.

DIAL THERMOMETERS

Furnished in 3½, 4½, 6 & 8½" dial sizes, vapor, liquid, gas or mercury actuated, with standard ranges between −40 to 1000°F. Also bimetal dials in sizes 1¾", 3" and 5".

RECORDING THERMOMETERS

The L86000 10" chart recorder has a S.A.M.A. class 1B thermal system and is supplied with ranges from −40 to 1000°F.

OTHER TRERICE PRODUCTS

PRESSURE GAUGES

Furnished in 2½, 3½, 4½, 6 & 8½" dial sizes, bronze, steel, stainless steel bourdon tubes with standard ranges from 30" Vac. to 30,000 psi. Dry or liquid filled.

TEMPERATURE CONTROLLERS

Designed to control temperatures or pressures in vessels, tanks, etc. No. 87700 pneumatic, No. L84000 electric.

PRESSURE REDUCING VALVES

Furnished in self contained or pilot operated types. Valve sizes ¼" thru 6", steam, water, air, oil & gas.

[illegible]

Featuring the patented "ROTATING VALVE". Sizes ½" thru 2".

Bulletin MK 86 9/88

JORDAN VALVE

MARK 86

AMBITEMP II
MARK 86 AMBIENT TEMPERATURE REGULATOR

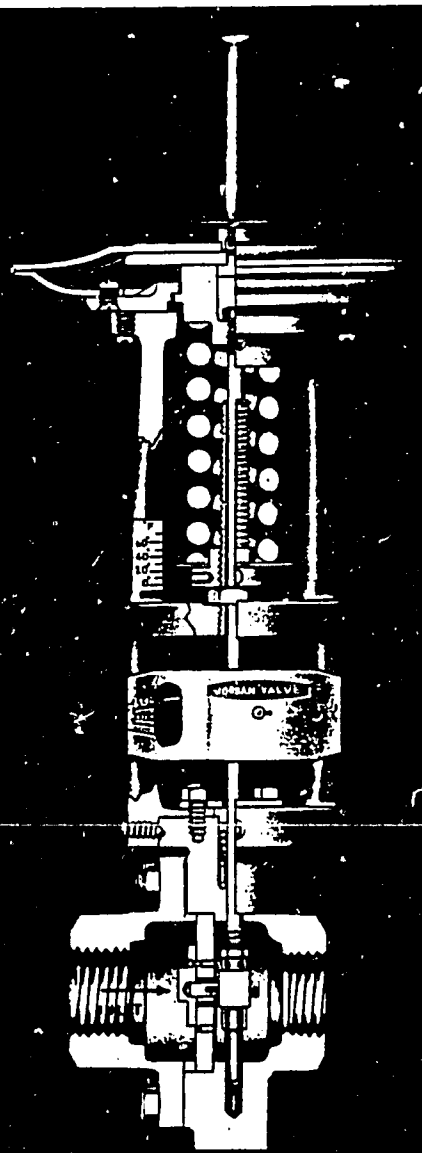

FOR STEAM TRACING
A SUPERIOR STEAM REGULATING VALVE COMBINED WITH A SELF-CONTAINED STAINLESS STEEL ACTUATOR THAT SENSES AMBIENT TEMPERATURE

- ★ PROTECTION AGAINST FREEZING OF OUTSIDE PIPELINES, TANKS, INSTRUMENTATION
- ★ SAVINGS OF STEAM ENERGY AND OPERATING COSTS
- ★ EXCELLENT CONTROL
- ★ LOW NOISE
- ★ LONG OPERATING LIFE
- ★ FIELD COMPENSATION FOR DIFFERENCE IN LOCATION AND THE EFFECTS OF RADIANT, CONVECTIVE OR CONDUCTIVE HEAT
- ★ OPTIONAL SURFACE CONTACT THERMOMETER

CALL YOUR JORDAN VALVE REPRESENTATIVE:

OR CALL JORDAN TOLL-FREE: **800-543-7311**
(IN OHIO, CALL COLLECT: 513-533-5600)
IN CANADA, CALL TOLL-FREE: 800-354-0305

JORDAN VALVE
DIVISION OF RICHARDS INDUSTRIES, INC.
3170 WASSON ROAD, CINCINNATI, OHIO 45209-2381 U.S.A.
PHONE: 513-533-5600 TELEX: 21-4464
FACSIMILE: 513-871-0105

FAST DELIVERY
36-HOUR SHIPMENT USUALLY AVAILABLE

MK 86 AMBITEMP II

The JORDAN AMBIENT TEMPERATURE REGULATOR features infinitely ADJUSTABLE SET POINT, permits FIELD COMPENSATION for differences in location and the effects of radiant, convective and conductive heat. A highly visible STEM POSITION INDICATOR and TEMPERATURE SET POINT SCALE indicate correct operation at a glance; and an optional SURFACE CONTACT THERMOMETER is now available to instrument each installation fully - NO MORE GUESSING.

The Mark 86 AMBIENT TEMPERATURE SENSING REGULATOR is ideal as a steam tracing control valve. It is completely self-contained and automatically opens at a set ambient temperature allowing just enough steam to flow to provide protection against freezing or sub-normal process temperature conditions. The superior Jordan Valve SLIDING-GATE TRIM gives excellent control and shut-off. It is famous for resistance to wire-drawing, lower noise and long, maintenance-free service.

OPERATION:

Ambient temperature is directly sensed by the liquid-vapor filled Mark 86 actuator. A decrease in temperature decreases the vapor pressure against the diaphragm, allowing the control spring to expand and open the valve.

SPECIFICATIONS:

SIZES: ¼" through 2"

END CONNECTIONS: Threaded (N.P.T.), Union or Flanged

MATERIALS: Body - Ductile Iron, Bronze (¼" - 2"); Carbon Steel, Stainless Steel (½" - 2")
Trim - SS/BRZ for DI & Brz Body Valves, 303SS for CS Body Valves, 316SS for SST Body Valves
Seats - 303SS, 316SS, Jordanic, Jordanite, Teflon Coated
Actuator - 304SS, Liquid vapor filled
Yoke - Cast Iron
Stem Packing - Spring loaded teflon (500° max), Grafoil (above 500°F)

SERVICE: Tracing Steam (Also Suitable For Other Heating Fluids)

ACTION: Direct - Decrease in temperature opens valve:

BODY RATING: Ductile Iron up to 988 psi and 650°F; Carbon Steel and Stainless Steel up to 1480 psi and 650°F; Bronze up to 500 psi and 500°F depending upon specific construction. −20°F temperature limit on all materials. For other temperatures, consult factory.

C_v FLOW COEFFICIENTS & MAXIMUM PRESSURE DROP.

C_v*	VALVE SIZE	SEATING MATERIAL	MAX. ΔP, PSI	
			SAT. STEAM & AIR	LIQUID
.84	¼" & ⅜"	Standard	125	125
1.6		Jordanic	325	150
		Jordanite	400	400
		Teflon Coated	375	375
2.5	½" & ¾"	Standard	125	125
4.4		Jordanic	250	125
		Jordanite	300	300
		Teflon Coated	300	300
6.4	1" & 1¼"	Standard	125	125
9.5		Jordanic	200	125
		Jordanite	250	250
		Teflon Coated	200	200
15	1½"	Standard	75	75
25	2"	Jordanic	150	75
30		Jordanite	175	175
		Teflon Coated	175	175

*Low flow trim available

CONTROL: The TEMPERATURE SET POINT SCALE shows the °F at which the valve is **set to be wide open.** Therefore, the °F at which the valve is closed — or begins to open — is determined by adding the number of °F of the appropriate span.

EXAMPLE: Standard spring; −10 to 40°F range; valve size 1". If a 1" valve with −10 to 40°F range and standard spring has a set point of 30°F on the TEMPERATURE SET POINT SCALE (by turning the spring adjusting wheel), then the valve will start to open at 45°F and be fully open at 30°F. Within the various spans, the AMBITEMP II will, of course, modulate the flow in accordance with the temperature sensed by the actuator.

OPTIONAL SUNSHIELD AVAILABLE: Eliminates sunlight "heat-up" of the actuator on bright sunny days which can result in poor set point control. It helps simulate the valve being installed in the shade.

RANGES OF TEMPERATURE CONTROL

STANDARD: WITH STD. SPRING #37			
-10 - 40	30 - 80	50 - 100	80 - 130
95 - 150	115 - 170	155 - 210	
VALVE SIZE	TEMPERATURE SPAN FROM 'CLOSED' TO 'OPEN'*		
¼" - ¾"	10°F		
1" - 1¼"	15°F		
1½" - 2"	20°F		

*For Ranges 115-170 & 155-210, Consult Factory

OPTIONAL: WITH LIGHT SPRING #152			
-10 - 27	25 - 60	45 - 80	75 - 110
95 - 130	115 - 150	145 - 180	155 - 190
VALVE SIZE	TEMPERATURE SPAN FROM 'CLOSED' TO 'OPEN'**		
¼" - ¾"	6°F		
1" - 1¼"	10°F		
1½" - 2"	13°F		

Consult Factory for other ranges.
**For Ranges 95-130, 115-160, 145-180, & 155-190, Consult Factory.

DIMENSIONS & WEIGHTS:

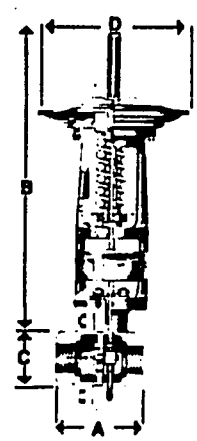

VALVE SIZE	DIMENSIONS IN INCHES									
	DUCTILE IRON & BRONZE					CARBON & STAINLESS STEEL				
	A	B	C	D	WT.	A	B	C	D	WT.
¼" - ⅜"	3¼	14⅝	2	7	18	—	—	—	—	—
½" - ¾"	3⅝	15	2¼	7	20	4	15	2¼	7	25
1" - 1¼"	4¼	15¼	2⅝	7	22	4¾	15¼	2⅝	7	28
1½"	4½	15½	2⅝	7	24	4⅞	15¾	2¾	7	32
2"	4½	15⅝	2⅝	7	24	5½	15⅞	3	7	38

36-HOUR SHIPMENT USUALLY AVAILABLE JORDAN VALVE

PRINTED IN U.S.A.

Industrial Division
Bulletin TL-360
August 1988

Ogontz CORPORATION

MAR 9 1990

THE OGONTZ TL AMBIENT SENSING CONTROL VALVE

Eliminates Steam Waste by Automatically Controlling Steam Flow in Response to Ambient Temperature

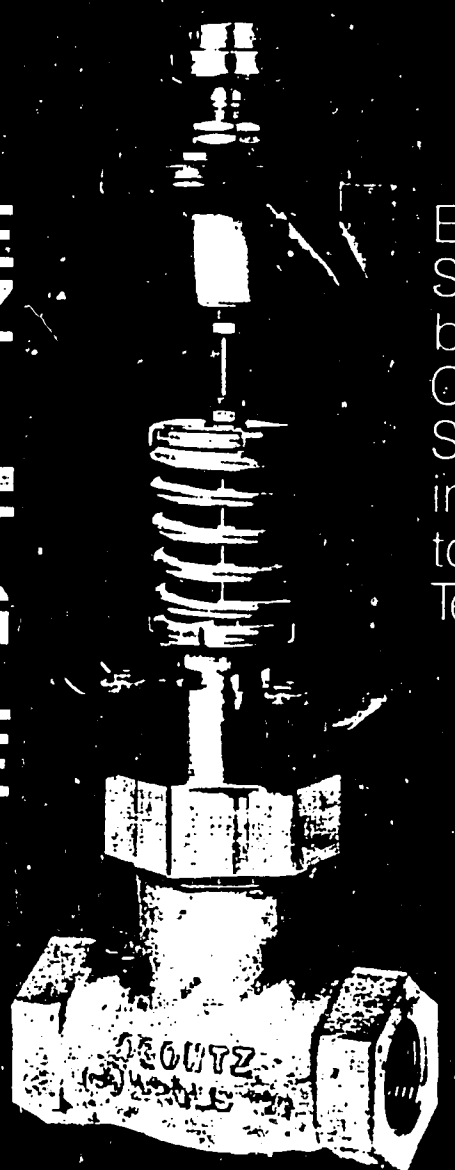

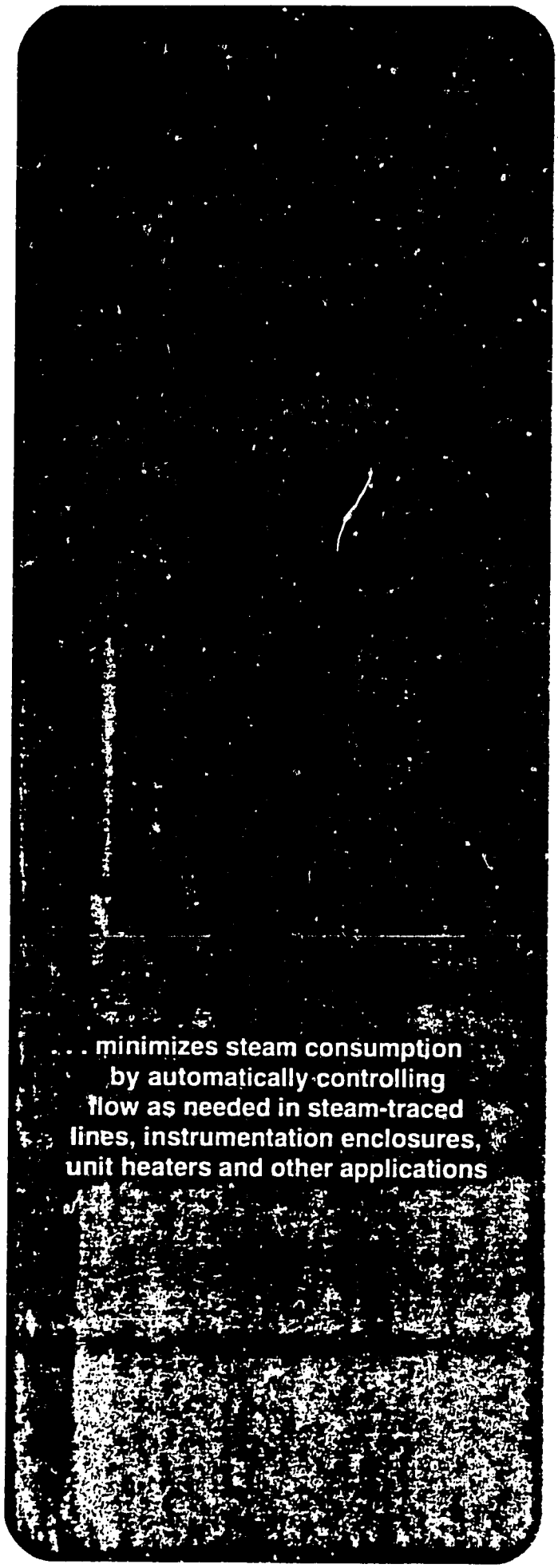

The Ogontz TL valve is a fully self-contained, temperature-actuated control valve. It effectively eliminates steam waste by automatically regulating the supply of steam in response to changes in ambient temperature. As a result, the TL valve achieves dramatic reductions in the amount of steam consumed, with annual savings averaging eight times its installed cost.

High reliability, low maintenance and long service life are assured by the state-of-the-art, precision thermal actuator. The Ogontz TL valve completely eliminates the use of hazardous, chemically filled diaphragms, delicate capillaries or thin-walled bellows.

The TL valve continuously monitors ambient temperature, and regulates steam flow on an as needed basis. This eliminates steam waste and substantially reduces the possibility of overheating.

The Ogontz TL valve is ideal for steam-traced lines of all types, protecting temperature sensitive instrumentation, winterizing product lines, conserving energy in unit heaters, and other applications requiring control of heat transfer media (i.e. glycol, hot oil, water, etc.) based on ambient temperature change.

The Ogontz TL ambient sensing valve is the key to positive, year-round protection of your systems and equipment at the lowest cost.

DESIGN FEATURES

- Direct Acting (no pilot valve)
- Self-contained, solid-liquid thermal actuator requires no external power or operating signal
- High repeatability—no set point drift
- Valve port opens gradually, preventing system shock
- Fail-Safe (valve opens)
- Temperature set points from 35° to 240°F
- In-line serviceable
- Line sizes ½" through 2"
- 100% factory tested

ENERGY SAVINGS POTENTIAL SURVEY

To help you in your efforts to reduce steam usage in your facility, Ogontz will conduct an energy survey and show you precisely where, how and how much you can save by installing TL or other Ogontz energy saving control valves or steam traps. Please call or write to arrange for one of our experienced field engineers to help you reduce energy usage and boost operating efficiency.

SELF-CONTAINED THERMAL ACTUATOR

The heart of the Ogontz TL valve is the unique, solid-liquid phase thermal actuator. This hydrocarbon wax-filled device actuates the valve in response to changes in ambient temperature. The transition from solid to liquid phase causes a large change in volume, exerting a tremendous force over a narrow temperature band.

COLD POSITION

As the ambient temperature drops below the set point, the wax contracts (Figure 1), relieving the force exerted by the piston on the operating spring, and allowing the valve to open. The valve remains open until the temperature rises, at which time the valve begins to close.

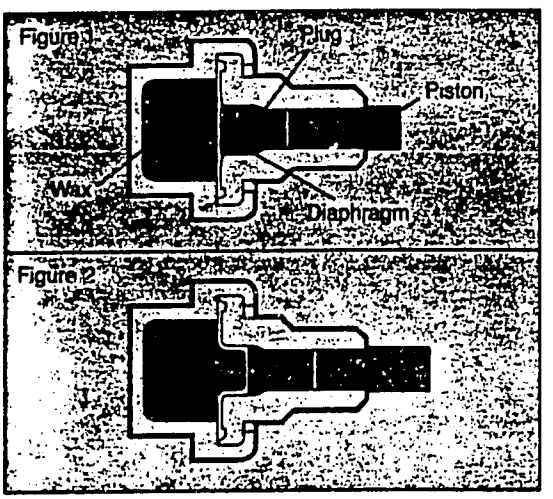

HOT POSITION

As the ambient temperature rises above the set point, the wax starts to expand (Figure 2), exerting force on the piston and operating spring to close the valve. The valve will remain closed until the temperature drops, at which time the valve begins to open.

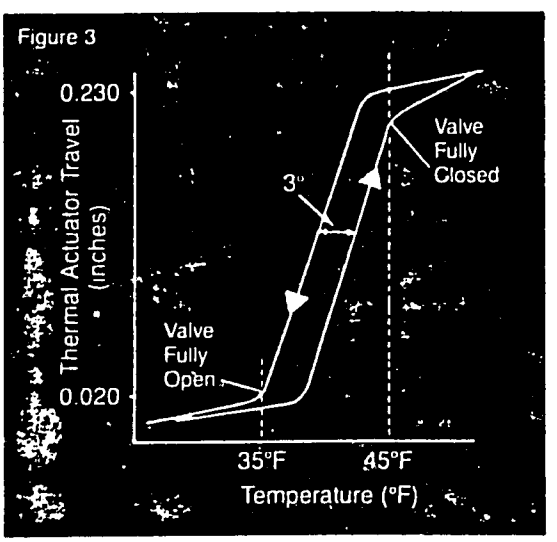

As shown in Figure 3, the limited hysteresis of the wax during changes in state from solid to liquid results in a narrow temperature dead band, providing very close control around the temperature set point.

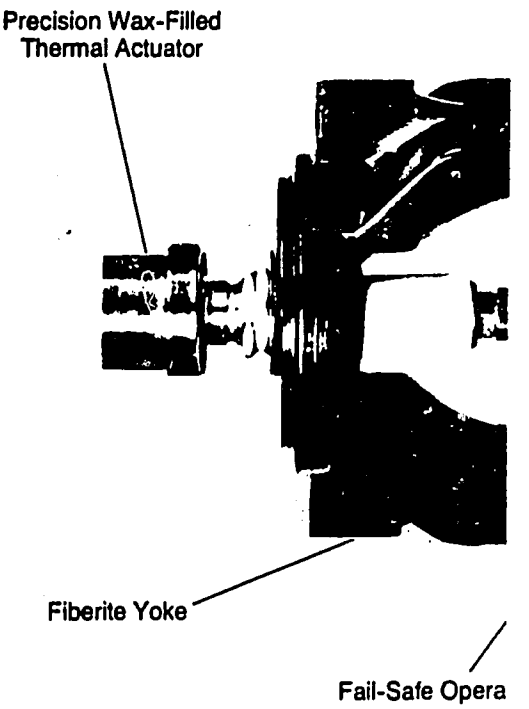

Typical Energy Saving Applications For Ogontz

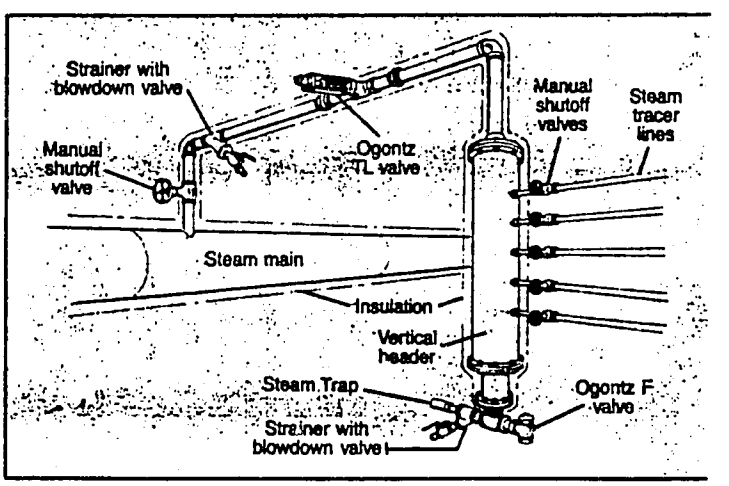

Figure 5. Installed on a vertical tracer line header, the TL valve controls flow of steam to tracer lines. Steam is shut off automatically when ambient temperature rises above desired level. Steam trap installed at low point of header discharges condensate and eliminates live steam losses. An Ogontz F valve is used for backup freeze protection for the header.

47

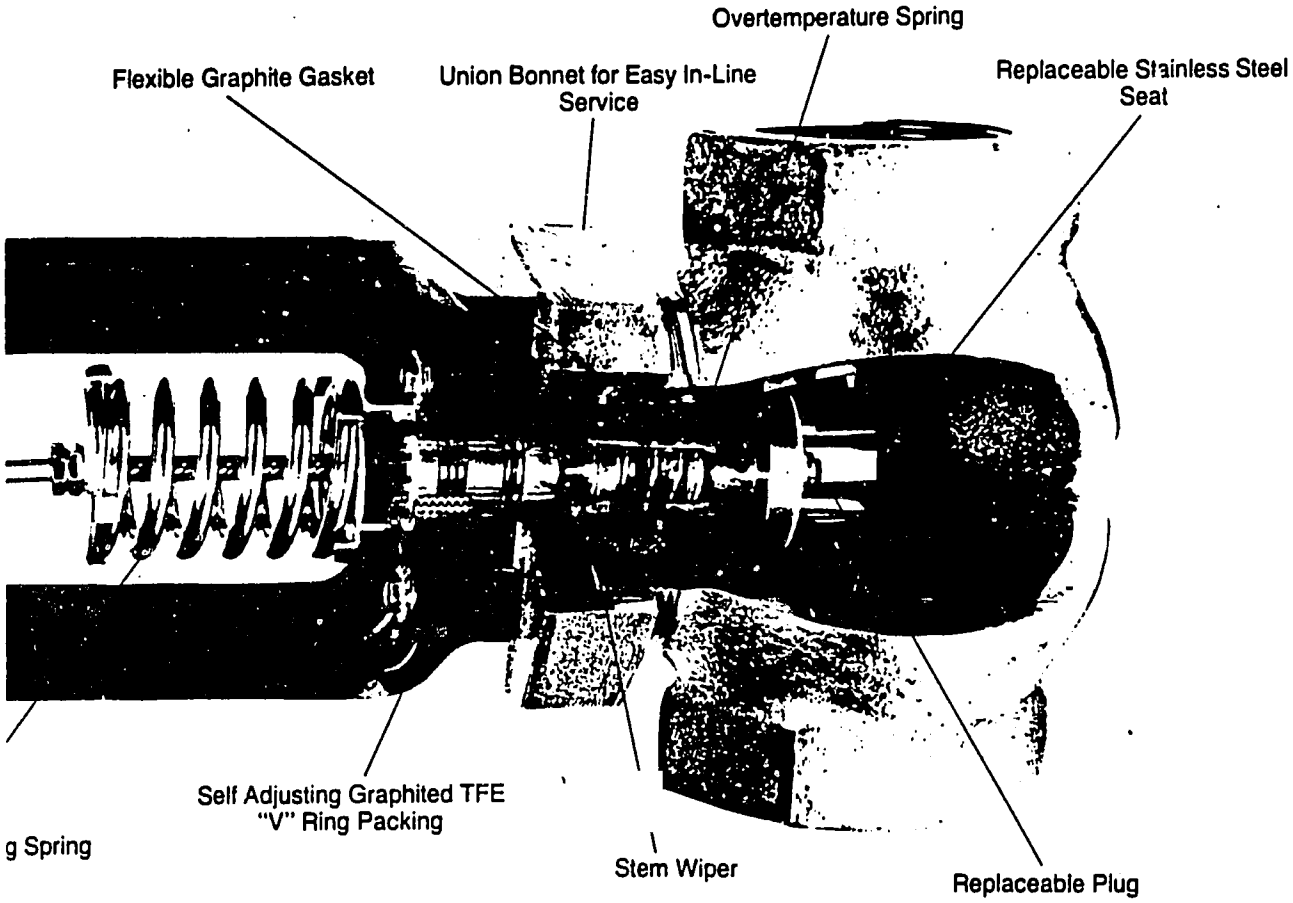

'L Control Valves

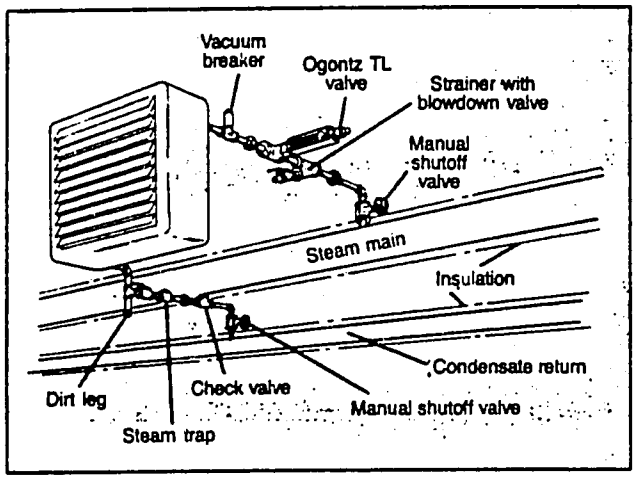

Figure 6. TL valve on a horizontal draft unit heater. Steam supply is automatically shut off when desired ambient temperature is reached. This minimizes steam consumption and effectively eliminates heat loss when the fan is shut off.

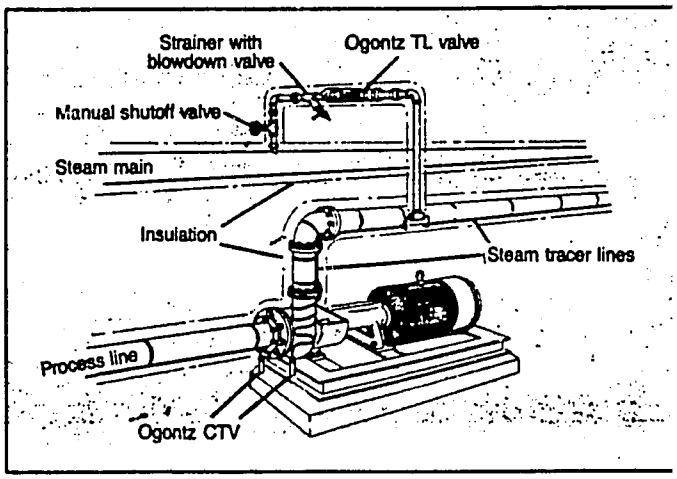

Figure 7. TL valve used to control steam supply for tracing of process line equipment and lines. TL allows steam to flow only when ambient temperature drops below desired point. CTVs trap steam at tracer low points, providing maximum economy. Note that tracing has been arranged to gravity drain to CTVs.

Automatic, Temperature-Actuated Ogontz TL Control Valves Let You Use Steam As Needed For Freeze Protection

Table I. Steam is automatically shut off when temperature rises above 40°F.

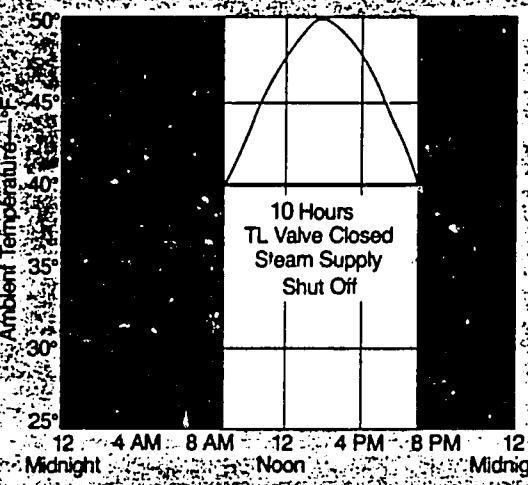

Table II. Percentage of steam saved using Ogontz TL valves on steam-traced lines.

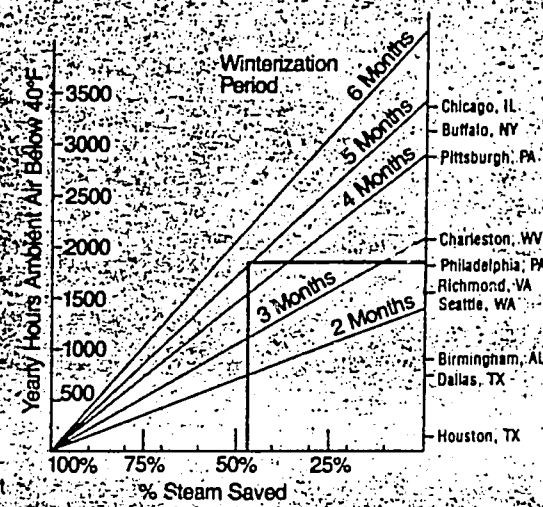

Significant savings in steam-traced lines are achieved with Ogontz TL Control Valves by only using steam as needed for freeze protection. For example, over a 10 year period, the Philadelphia area averaged about 1900 hours of temperatures below 40°F. Using a typical five-month winter, operation of a steam-traced line was required only 53% of the time. This means that a savings of 47% in steam usage could have been achieved with an Ogontz TL Control Valve. Even greater savings can be realized in areas with higher average temperatures.

Table II shows the percentage of steam saved in various locations by automatically controlling steam flow in traced lines during the winterization period. A typical steam-traced line is shown in Figure 5.

PROVEN ENERGY SAVINGS ON UNIT HEATER & TRACER SERVICE KNOW THE R.O.I. FACTS ... THROUGH A NO COST SURVEY

Computerized Energy Reports

Show your potential energy savings, estimated equipment cost & R.O.I. for applications such as:
- Steam Unit Heaters
- Winterized Steam Tracing
- Product Heating
- Product Tracing
- Transfer Line Tracing
- C.T.V. Valves vs Steam Traps

Join The Many Satisfied Users

Allied Chemical Corporation
Arco/Chemicals
Dow Chemical Corporation
Exxon Chemical
FMC Corporation
Ford Motor Company
B.F. Goodrich Company
Hercules, Inc.
Mobay Chemical
Union Carbide Corporation

Contact Ogontz or Your Local Rep

49

Valve Size NPT*	Max. Operating Pressure (psig)	Body Rating	Orifice Size (In.)	Cv ±10%	Maximum Capacity Lbs./Hr. Saturated Steam at Inlet Pressure (psig) 15	30	50	100	150	200	Body Material	Model Number †
½	200	ANSI 300 Lb. Class	½	3.4	186	280	405	718	1030	1343	Bronze Stainless Steel	½ TL-..-CDB ½ TL-..-CDS
¾	200		½	3.8	208	313	452	802	1152	1501	Bronze Stainless Steel	¾ TL-..-CDB ¾ TL-..-CDS
1	200		¾	5.5	301	452	655	1161	1667	2173	Bronze Stainless Steel	1 TL-..-CDB 1 TL-..-CDS
1½	200		¾	5.8	317	477	690	1224	1758	2291	Bronze Stainless Steel	1½ TL-..-ADB 1½ TL-..-ADS
1½	150		1	8.3	454	683	988	1752	2515	—	Bronze Stainless Steel	1½ TL-..-BDB 1½ TL-..-BDS
1½	50		1½	13.8	754	1135	1643	—	—	—	Bronze Stainless Steel	1½ TL-..-CDB 1½ TL-..-CDS
2	200		¾	6.4	350	526	762	1351	1940	2528	Bronze Stainless Steel	2 TL-..-ADB 2 TL-..-ADS
2	150		1	8.8	481	724	1048	1857	2667	—	Bronze Stainless Steel	2 TL-..-BDB 2 TL-..-BDS
2	50		1½	14.1	771	1160	1679	—	—	—	Bronze Stainless Steel	2 TL-..-CDB 2 TL-..-CDS

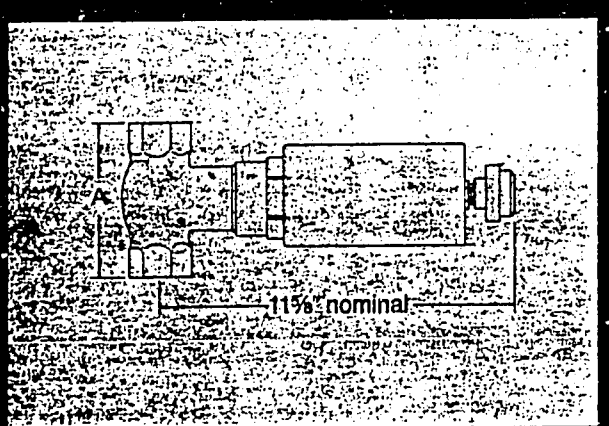

Valve Size NPT*	Inches A	Weight Lbs.	Body Material
½	3½	6½	Bronze
½	4	7½	Stainless Steel
¾	3½	6½	Bronze
¾	4	7½	Stainless Steel
1	4½	8	Bronze
1	4½	8½	Stainless Steel
1½	6	16	Bronze
1½	6	17	Stainless Steel
2	6	15	Bronze
2	6	16	Stainless Steel

Guarantee: We will repair or replace on a no-charge basis, F.O.B. Willow Grove, Pa. valves returned to us within 18 months if found to be defective in material or workmanship.

Ogontz CORPORATION

141 Terwood Road • P.O. Box 479 • Willow Grove, PA 19090 • (215) 657-4770 • FAX—(215) 657-0460

Outside Pennsylvania, Call Ogontz Toll Free: 1-800-523-2478

Printed in U.S.A. 2500-1/87NWP

- 50

OGONTZ CORPORATION
WILLOW GROVE, PA
FAX: (215) 657-0460
PHONE: (215) 657-4770
PHONE: (800) 523-2478 (Outside Pennsylvania)

TO : Mr. William Dries

COMPANY : Dries Associates

FROM : Debra A. Garrison
Marketing Administrator

DATE : April 18, 1991

We are transmitting 5 page(s) including this covering letter. If there is a quality problem or if any pages are missing from this transmission, please call the undersigned at (215) 657-4770 or outside of Pennsylvania (800) 523-2478.

Following is the Energy Savings Potential Report that you requested from Dick Bentz.

If you have any questions, please feel free to contact us.

RECEIVED
DJA
APR 18 1991

OGONTZ CORPORATION
141 TERWOOD ROAD
WILLOW GROVE, PA 19090

APRIL 18, 1991

MR. WILLIAM DREES

DREES ASSOCIATION
7457 ELMWOOD AVENUE
MIDDLETON, WI 53562

DEAR MR. DREES

THE USE OF SELF-CONTAINED, CONTROL VALVES THAT MEASURE AMBIENT TEMPERATURE AND AUTOMATICALLY TURN OFF STEAM SUPPLY WOULD ACHIEVE SUBSTANTIAL SAVINGS IN STEAM COSTS AND OPERATING COSTS OF UNIT HEATERS AT YOUR COMPANY.

WE HAVE TAKEN THE VARIOUS FIGURES THAT YOU PROVIDED AND WE HAVE EVALUATED THEM ON OUR IBM COMPUTER AT OGONTZ CORPORATION.

THE CALCULATIONS HAVE SHOWN THAT THE OPERATING SAVINGS TO YOUR COMPANY WOULD BE AN ANNUAL AMOUNT OF 2,457.84

WITH A CAPITAL EXPENDITURE OF $ 1,420.00
THE ANNUAL RETURN ON INVESTMENT IN THE FIRST YEAR WOULD BE 1.73 R.O.I.

YOU CAN BEGIN THE SAVINGS AS SOON AS YOU WISH THE PROGRAM TO START. THE INVESTMENT WOULD BE RETURNED IN 211 DAYS, AND THEN YOUR COMPANY WILL ACCRUE A PURE SAVING EACH MONTH OF $ 204.82

DETAILS OF THE CALCULATION STEPS TO ARRIVE AT THE ABOVE FIGURE ARE SHOWN ON THE COMPUTER SHEET ATTACHED TO THIS LETTER.

WE LOOK FORWARD TO WORKING WITH YOUR COMPANY IN THE NEAR FUTURE.

VERY TRULY,

OGONTZ CORPORATION

RECEIVED
APR 18 1991

CALCULATIONS CONCERNING THE STEAM HEATER SYSTEM

BASED ON DATA SUPPLIED BY MR. WILLIAM DREE
WE HAVE MADE A COMPUTER ANALYSIS OF BOTH THE ENGINEERING AND FINANCIAL
ASPECTS AND RESULTS FOR - DREES ASSOCIATION

INPUT DATA -
STEAM COST PER 1000 LBS- $ 6.27

HEATING SYSTEM -

ITEM NUM.	DESCRIPTION	NUMBER OF HEATERS	HEATER RATING EA BTU/HR	STEAM PRESSURE IN PSIG	EST. FAN OFF HRS. HTG. SEAS.	NUM OF VALVES TO USE
1.	FACTORY FAB. SHOP	4	150,000	150	3,265	4
2.						
3.						
4.						
5.						
6.						
7.						
8.						
9.						
10.						
11.						
12.						
	TOTALS	4				

CALCULATIONS TO DETERMINE CV RATINGS -

ITEM NUM.	NUM. OF HEATERS	STEAM PRESSURE IN PSIA	ENTHALPY OF STEAM IN BTU/LB	HEATER RATING EA BTU/HR	VALVE STM. RATE LB/HR	REQ'D. CV RATE/PSIA
1.	4	164.7	857.2	150,000	175.0	/1.84 .58
2.						
3.						
4.						
5.						
6.						
7.						
8.						
9.						
10.						
11.						
12.						
TOTALS	4					

RECEIVED
DJA
APR 18 1991

APRIL 18, 1991

COST SAVINGS AVAILABLE IN STEAM HEATER SYSTEM
THROUGH USE OF OGONTZ CORPORATION SYSTEMS

SUGGESTED OGONTZ CORPORATION TL CONFIGURATION OF SYSTEM -

LINE ID #	NUM OF VALVES	CV RATING REQUIRED	SUGGESTED OGONTZ TL VALVES	COST EA.	EXTENDED AMT.
1.	4	.58	3/4 TL 3.8 CDN	355.00	1,420.00
2.					
3.					
4.					
5.					
6.					
7.					
8.					
9.					
10.					
11.					
12.					
TOTAL	4		TOTAL INVESTMENT - $		1,420.00

LABORATORY AND FIELD TESTS HAVE SHOWN THAT WHEN UNIT HEATER FANS ARE OFF, WITH THE STEAM LEFT ON, UP TO 35 PERCENT OF THE RATED HEATER CAPACITY IS LOST THROUGH RADIATION AND CONVECTION LOSSES, AS WELL AS LOSSES ASSOCIATED WITH NORMAL STEAM TRAP OPERATION. FOR THIS ANALYSIS, WE HAVE ASSUMED A VERY CONSERVATIVE 20 PERCENT, OF RATED CAPACITY, FOR THESE LOSSES. YOUR ACTUAL USE WILL PROBABLY SHOW EVEN GREATER SAVINGS.

CALCULATIONS TO DETERMINE ANNUAL SAVINGS -

LINE ID#	NUM OF HEATERS	HEATER RATING EA BTU/HR	TOTAL HEATER BTU/HR	X .20 FOR HEATER LOSS WHEN FANS OFF	X HOURS FANS OFF DUR.SEA.	HEATER LOSS FANS OFF BTU/SEASON
1.	4	150,000	600,000	120,000	3.263	391,560,000
2.						
3.						
4.						
5.						
6.						
7.						
8.						
9.						
10.						
11.						
12.						
	4		TOTAL BTU/SEASON -			391,560,000
			MULTIPLIED BY STEAM COST PER MILLION BTU -			x $ 6.27
			** AMOUNT THAT CAN BE SAVED EACH YEAR - $			2,457.88

RECEIVED
DJA
APR 18 1991

FINANCIAL EVALUATION OF SAVINGS

FROM THE INFORMATION PROVIDED AND FROM OUR COMPUTATIONS, THE USE OF OGONTZ TL AUTOMATIC UNIT HEATER STEAM CONTROL VALVES AT YOUR COMPANY, DREES ASSOCIATION WOULD PROVIDE SAVINGS AS FOLLOWS-

CONCLUSION -

UTILIZING OGONTZ TL AUTOMATIC VALVES WILL SAVE $ 2,457.84 ANNUALLY, IN STEAM ENERGY OPERATING COSTS.

SIMPLIFIED RETURN ON INVESTMENT CALCULATION -

ANNUAL SAVINGS / COST OF TL'S EQUALS YOUR RETURN ON INVESTMENT.
2,457.84 SAVED / $ 1,420.00 EQUALS 1.73 R.O.I., FOR YOUR COMPANY.

** OR 211 DAY PAYBACK PERIOD. **

THE TOTAL SYSTEM STEAM RATE WILL BE REDUCED DURING THE HOURS THAT THE OGONTZ TL VALVE IS CLOSED, BY AN AMOUNT EQUAL TO THE INDIVIDUAL VALVE STEAM RATE MULTIPLIED BY THE NUMBER OF VALVES, WITH A TOTAL SUM FOR ALL OF THE HEATERS. THIS TOTAL FIGURE IS THEN MULTIPLIED BY 20 PERCENT TO GIVE THE TOTAL STEAM RATE REDUCTION IN LBS/HR. THE REDUCTION IS REALIZED DURING THE HOURS THE OGONTZ TL TURNS OFF THE STEAM.

INVESTMENT -	1,420.00
YEARLY SAVINGS -	2,457.84
RETURN ON INVESTMENT -	1.73
PAYBACK TIME -IN DAYS-	211
REDUCTION IN STEAM RATE - UP TO	1400 LBS/HR.

RECEIVED
DJA
APR 18 1991

APPENDIX B
Calculations for Double Pane Windows

Almost all windows in building 1 & 2 are single pane glass windows. Temperature measurements were made to determine the heat loss through a single pane window and a double pane window. The energy savings by installing an additional glass pane on the inside of the existing window is calculated as follows:

The overall heat transfer coefficient is approximately 0.95 for a single pane window and 0.35 for a double pane window (BTU/sq.ft. °F / hr.) as measured at the building and calculated.

Heat saved = (0.95-0.35) x (27°F delta temp) = 16.2 BTU/sq.ft./hr
Heat saved per yr. = 16.2 x 10.76 x 1055x4500 hrs/yr = 0.82 GJ/yr/m^2
Total glass area estimated at 10,620 m^2
Annual savings = 0.82 x 10,620 = 8708 GJ/yr
Annual cost savings = 62 Kcs/GJ 8708 = 539,920 Kcs.($19,282)

539,920/10,620 = 50.8 Kcs/m^2/yr.

Cost to purchase and install second pane of glass is estimated at 200 Kcs/m^2. Payback = 200/50.8 = 3.9 yrs.

The window glass used for the new glass should be the same type as the existing.

APPENDIX C
Calculations for Uninsulated Piping

Pipe heat loss due to radiation and convection was calculated with the following heat transfer coefficient equations;

$$Hr = 0.172*E*((Ts/100)^4-(Ta/100)^4)/(Ts-Ta)$$

$$Hc = 1.016*(1/D)^{0.2}*(2/(Ts+Ta))^{0.181}*(Ts-Ta)^{0.266}$$

$$Q = (Hr + Hc)*(Ts - Ta)$$

where;

Hr = radiant heat transfer coefficient (BTU/hr sq. ft. °F)
Hc = convection heat transfer coefficient (BTU/hr sq. ft. °F)
E = emissivity of the surface (0.8 for rusty metal pipe)
Ts = temperature of the outside pipe wall (° Rankine)
Ta = temperature of the ambient surrounding air (° Rankine)
D = outside diameter of the pipe (inches)
Q = rate of heat transfer of the surface (BTU/hr sq.ft.)

Conversion factor: Joules/hr m2 = 11357 * BTU/hr ft2
°R = (°C * 9/5) + 32 + 460
meter = 0.0254 * inches

The total pipe heat loss is then calculated with the measured dimensions of the pipe.

Heat loss = Q * 3.14 * D * (pipe length)

The total pipe heat saved is calculated based on the effectiveness of 1.5 inches of insulation (0.7) and the nominal boiler fuel to steam efficiency (0.74).

Heat saved = Heat loss * 0.7 * 24 hr/day * 312 days/yr

Fuel saved = (Heat saved / 0.74) / 15.48 GJ/metric ton

Fuel saved (Kcs) = Fuel saved * 45.6 Kcs/GJ

Table C1. Piping Heat Losses Estimate

MOSTAREN BREZNO
PIPING HEAT LOSSES ESTIMATE
BUILDING NO. 1, 15, 31

LOCATION	SURFACE TEMP. DEGREE C	PIPE DIAMETER mMETERS	PIPE LENGHTH METERS	TRANS. COEFF. MJ/HR*M2	ENERGY LOSS MJ/HR	HEAT ENERGY LOSS GJ/YR	PIPE INSULATIO ENERGY SAVINGS Kcs/YR
#31, HOT WATER MANIFOLD GROUP NORTH WALL							
2 VALVES	111	350	0.65	3.87	2.76	12.09	521.5
2 VALVES	111	250	0.65	3.97	2.03	8.89	383.5
2 VALVES	120	400	0.65	4.34	3.54	15.51	669
#31, DRYER/PAINT BOOTH HOT WATER HEATING MANIFOLDS (SEVEN), NORTH WALL							
PIPE	115	90	28	4.57	36.16	158.38	6831.7
9 VALVES	115	180	18.9	4.31	46.04	201.66	8698.6
PIPE	120	32	28	5.37	15.11	66.18	2854.7
#31, HOT WATER MAIN SHUTOFF VALVES							
2 VALVES	105	300	1.2	3.91	4.42	19.36	835.1
2 VALVES	110	450	1.6	4.1	9.27	40.6	1751.3
#31, HOT WATER SPACE HEATING MANIFOLD (TWO), NORTH WALL							
1 VALVE	118	300	1.2	4.32	4.88	21.37	921.8
2 VALVES	120	250	2.4	4.5	8.48	37.14	1602
1 VALVE	108	150	0.6	4.3	1.22	5.34	230.3
PIPE	102	45	14.8	4.34	9.08	39.77	1715.5
PIPE	102	45	96	4.34	58.87	257.85	11122.4
#31, MAKEUP AIR UNIT HEATER (TWO), OTHER FOUR UNITS NOT OPERATING							
PIPE	116	80	12	4.68	14.11	61.8	2665.8
#15, SPACE HEATING AND DOMESTIC HOT WATER ROOM IN BASEMENT							
PIPE	99	100	2.54	3.35	2.67	11.69	504.2
PIPE	87	100	2.54	2.64	2.11	9.24	398.6
PIPE	109	100	1.21	3.66	1.39	6.09	262.7
4 VALVES	109	200	1.21	3.46	2.63	11.52	496.9
PIPE	110	100	5	3.72	5.84	25.58	1103.4
PIPE	105	50	4.6	3.63	2.62	11.48	495.2
4 VALVES	105	100	1.2	3.42	1.29	5.65	243.7
#1, SPACE HEATING HOTWATER DISTRIBUTION							
PIPE	96	140	5	3.67	8.07	35.35	1524.8
1 VALVE	96	280	0.3	3.49	0.92	4.03	173.8
#1, SPACE HEATING UNIT HEATERS							
PIPE	72	40	126	2.81	44.47	194.78	8401.9
PIPE	77	40	126	3.1	49.06	214.88	9268.9
PIPE	91	40	118	3.65	54.1	236.96	10221.3
PIPE	86	40	118	3.33	49.35	216.15	9323.7
TOTAL	NA	NA	718.25	NA	440.49	1929.34	83222.3
AVERAGE	NA	52.3	NA	NA	NA	NA	NA

PAYBACK CALCULATION; INSULATION COST (Kcs) 215475
ESTIMATED SAVINGS (Kcs/yr) 83222.3

PAYBACK = 2.6

Table C2. Piping Heat Losses Estimate

TABLE C2

MOSTAREN BREZNO
PIPING HEAT LOSSES ESTIMATE
BUILDING NO. 31

LOCATION	SURFACE TEMP. DEGREE C	PIPE DIAMETER mMETERS	PIPE LENGHTH METERS	TRANS. COEFF. MJ/HR*M2	ENERGY LOSS MJ/HR	HEAT ENERGY LOSS GJ/YR	PIPE INSULATIO ENERGY SAVINGS Kcs/YR
#31, DRYER VALVE GROUP REPRESENTS ALL FOUR DRYERS							
PIPE	78	45	200	2.62	74.04	154	6642.8
14 VALVES	78	80	22.4	2.49	14.01	29.14	1257
6 VALVES	78	100	14.4	2.44	11.03	22.94	989.5
PIPE	78	45	86.4	2.62	31.99	66.54	2870.2
PIPE	78	60	115.2	2.55	55.34	115.11	4965.3
TOTAL	NA	NA	438.4	NA	186.41	387.73	16724.8
AVERAGE	NA	52.5	NA	NA	NA	NA	NA

PAYBACK CALCULATION; INSULATION COST (Kcs) 131520
ESTIMATED SAVINGS (Kcs/yr) 16724.8

PAYBACK = 7.9

NOTES: "# VALVE(S)" DENOTES A QUANTITY OF UNINSULATED VALVES
BASED ON AN AVERAGE COAL PRICE OF 705.4 Kcs/ton (45.6 Kcs/GJ)
BASED ON AN AVERAGE COAL HEATING VALUE OF 15.48 GJ/ton
"PIPE" DENOTES A QUANTITY OF UNINSULATED PIPE
THE FIRST NUMBER INDICATES THE BUILDING NUMBER ACCORDING TO THE FACTORY PLOT PLAN
INSULATION COST, NOMINAL 300 Kcs/meter, INCLUDING MATERIAL AND LABOR

APPENDIX D
Calculations for Coal-Fired Boiler Reduced Excess Air

TABLE D1. Combustion Calculations LBMoles per 100 lbs. Of Fuel

FUEL PROXIMATE ANALYSIS: 40% H_20,
9% ASH,
1.4% S
36.8% C
2.9% H
9.2% O
0.7% N

COMBUSTION AIR:

Fuel Component	Wt. Per 100 lb. Of Coal	Molecular Weight	Component LBMole/ 100 lb. of Coal	Required Oxygen LBMole/ 100 Lb. of Coal	Required Air LBMole/ 100 Lb. of coal
WATER H_20	40	18	2.222	0	0
ASH	9	NA	NA	0	0
SULFUR S	1.4	32	0.044	0.044	0.209
CARBON C	36.8	12	3.067	3.067	14.599
HYDROGEN H_2	2.9	2	1.45	0.725	1.726
OXYGEN O_2	9.2	32	0.288	0	0
NITROGEN N_2	0.7	28	0.025	0	0
TOTAL	100	NA		3.836	16.534
			LESS O_2 IN FUEL	-0.288	-1.365
			REQUIRED @ 100% EA	3.548	15.169

COMBUSTION PRODUCTS AT 600 % EXCESS AIR

		Oxygen LBMole/ 100 lb. Of Coal	Air LBMole/ 100 Lb. of Coal
	Total	21.288	91.014
	Excess Air	NA	75.845
	Excess O_2	17.74	NA
	Component LBMole/ 100 lb. of Coal	Volume Percent Wet	Volume Percent Dry
CARBON DIOXIDE	3.067	3.1	3.3
WATER	5.583	5.7	NA
SULFUR DIOXIDE	0.044	0	0
NITROGEN	71.901	73.1	77.5
OXYGEN	17.74	18	19.1
TOTAL	98.335		

COMBUSTION PRODUCTS AT 500% EXCESS AIR

		Oxygen LBMole/ 100 lb. of Coal	Air LBMole/ 100 Lb. of Coal
	Total	17.74	75.845
	Excess Air	NA	60.676
	Excess O_2	14.192	NA
	Component LBMole/ 100 lb. of Coal	Volume Percent Wet	Volume Percent Dry
CARBON DIOXIDE	3.067	3.7	4
WATER	5.265	6.4	NA
SULFUR DIOXIDE	0	0	0
NITROGEN	59.918	72.7	77.6
OXYGEN	14.192	17.2	18.4
TOTAL	82.442		

ENERGY LOSS COMPARISON OF 600% EA VERSUS 500% EA

Mean flue gas molecular weight lb/lbmole) = 29.2

Mean flue gas heat capacity BTU/lb °F) = 0.26

Average temperature difference between the combustion air and flue gas (°F) = 200

Flue gas volume difference 600% ea to 500% ea (lbmole/100 lbs Coal) = 15.893

Energy lost = 15.89*29.2*0.26*200 (BTU/100 lb coal) = 24,132

Energy lost (GJ/metric ton coal) = 0.561

Average coal heat content(GJ/metric ton) = 15.48

Energy loss percent of fuel fired = 100*0.561/15.48 = 3.6

Coal consumption for 1990 (metric tons) = 19,855

Coal savings by reduced ea to 500% (metric tons/yr) = 714.78

Coal savings (kcs/yr), 705.4 Kcs/metric ton = 504,206

Estimated combustion analyzer cost = 405,000 (portable, measuring CO_2, O_2, and CO)

Estimated payback (yr) = 405,000/504,206 = 0.8

Combustion Analyzer Specification

The combustion analyzer will provide Mostaren the means to monitor the boiler flue gas excess air levels and enable their own boiler technician to adjust the combustion air controls to reduce the excess air level. The analyzer must have the capability to measure oxygen, carbon dioxide, and carbon monoxide within the flue gases. Due to the uncertain coal quality and proximate composition, an analyzer that approximates the carbon dioxide concentration, based on type of fuel and oxygen concentration, is not acceptable. A combustion analyzer that meets the following specifications and manufactured by Anarad, CEA Instruments, Land Combustion, Teledyne Analytical Instruments or equal is suitable for this application.

Measured Parameters:	Flue Gas Concentrations for Oxygen, Carbon Dioxide, Carbon Monoxide, and Temperature
Calculated Parameter:	Flue Gas Excess Air Combustion Efficiency (optional)

Analyzer Performance:

Oxygen: 0 to 25% volume
+/- 0.1% volume resolution
+/- 0.2% volume accuracy

Carbon Dioxide: 0 to 20% volume
+/- 0.1% volume resolution
+/- 0.2% volume accuracy

Carbon Monoxide: 0 to 2000 parts per million volume (ppmv)
+/- 2 ppmv resolution
+/- 5% of reading accuracy

Flue Gas Temperature: 0 to 1100°Centigrade
+/- 1 °C resolution
+/- 2 °C accuracy

Flue Gas Excess Air: 0 to 1000%
+/- 1% resolution
+/- 10% accuracy

Analyzer Features:

- Portable, battery powered, capable of operating a minimum of 6 hours on a single charge.
- Battery Charger for 220 volt, 50 Hz power and power cord.
- Condensation trap with re-usable desiccant. Desiccant to be reactivated by drying in an conventional oven or microwave oven.
- Disposable particulate matter filter capable of removing one micron particles.
- Auto "zero" upon turning on the analyzer. "Zero"; ambient air 20.9% O_2, 0% CO_2, 0% CO
- Inconel probe, 24 inch length minimum and 10 feet of connecting hose to the analyzer.

Span Calibration Kit:

- Certified calibration gases, range 10% O_2, 6% CO_2, and 1000 ppmv CO Pressurized cylinder container(s) minimum 10 cubic feet.
- Calibration gas manifold and connection to the probe.

Spare Parts:

- Desiccant, 2 quarts minimum
- Disposable Filters, 24 minimum

APPENDIX E
Heat Recovery from Paint Spray Booths and Curing Booths

Paint Spray Booths:

Outside air is supplied to each booth by a makeup air unit with filters, hot water coil and fan. The discharge temperature is controlled to about 35 °C. The air is exhausted through the booth and to the outside. The exhaust air temperature was measured at 46 °C and the supply air at 57 °C. The exhaust airflow was measured and compared with the name plate rating of the fan: 4.2 m^3/s, 15 m^3/s fan rating. The airflow is low due to dirty air filters and/or loose fan belts. One exhaust fan was measured at 8.7 m^3/s; rated airflow was 8 m^3/s. Each booth has two air supply units and four exhaust fans. The air balance is 30 m^3/s outside air and 32 m^3/s exhaust air; 2 m^3/s are pulled from the room through the booth doorways. The exhaust is first passed through filters located in the floor of the booth. The air is still contaminated with paint residue and additional filters will be required prior to an air to air heat recovery unit. There is a potential for heat recovery based on the correct air flow of the outside air and temperatures of the exhaust and discharge from the heating coil. Discharge temperature would be about 35 °C and exhaust air temperature 25 °C.

The average outside air temperature in this region is 3 °C. Recoverable heat is estimated to be 30% of the total heat available;

32 cubic m/s x 35 x 60 x 1.1 x (25-3) x .5 = 1,463,616 BTU/hr

1,463,616 x 1.055 = 1.544 GJ/hr

At 1000 hr/yr operation, yields a savings of 1,544 GJ/yr

Additional operating costs due to larger motors for the fans is estimated to be 15% of the value of the energy saved. Additional operating costs for filters and labor to maintain the unit. This is estimated at 5% of the capital cost, each year.

The capital cost of the heat recovery system for each booth is estimated at $32,000; the major components are the air to air heat exchanger unit, exhaust fans, filters, ductwork and installation.

Total annual savings are:

(1,544GJ x 62 Kcs/GJ x .85) - 44,800 = 36,568 Kcs
Total capitol cost is $32,000 = 896,000 Kcs

Estimated Payback is approximately 25 years. This energy saving scheme is not recommended. If the paint booths were operated 3,000 hrs/yr, the payback would be about 8 years.

Paint Curing Booths:

The booths are heated by hot water and air is circulated inside by fans. Gravity exhaust dumps air into the room at 40C. An exhaust fan to the outside of the building is not used. The potential for heat recovery is limited because the exhaust to the outside is not used.

APPENDIX F
Miscellaneous

Actual Consumption Fuel and Consumption Heat Energy

SPOTREBA PALÍV A VÝROBA TEPELNEJ ENERGIE

za obdobie : 1990 Mostársky Brezno

	Názov		Jednotky	Hnedé uhlie triedené	Hnedé uhlie prach	Koks	LTO	Zem. plyn	Tepelná energia
				k = 15,96	k = 12,5	k = 22,15	k = 42,3	k = 33,41	GJ
Spotreba	Central Boiler Station (old) Ústredná kotolňa stará		t	29600					34967
			GJ	472941					
	Ústredná kotolňa nová (new)		t	8272,35	8563				17695
			GJ	132027	107037				
	outside factory school SOUS - Mazorník + CTP office + workshop		t	1337,65					15802
			GJ	21379					
	outside factory DK - ROH (cultural club)		t			136,63			2111
			GJ			3122			
	outside factory Jasle 1-3 ages nursery school		t			25,0			422
			GJ			571			
	outside factory RS - Mýto 13 km away rec. center		t			116,95	19		2573
			GJ			2672	804		
	outside factory Materská škola 3-6 ages school		$10^3 m^3$					69	1705
			GJ					2300	
	Výrobná spotreba heat treatment		t			120,42			2077
			GJ			2752			
	Vykurov. koľajníc HPÚ - technolog.		t	x	x	x	x	x	
			GJ	x	x	x	x	x	
Použitie	Pre výrobu tepla z palív		t	12570	8563	399	19	69	x
			GJ	200617	107037	9120	804	2300	
	Consumption Total SPOTREBA CELKOM		GJ	319878					236771
Rozdelenie	s toho :			Paliva :					Teplo :
	Space heating Vykurovanie	69%	GJ	220716					163372
	Ostatná spotreba	31%	GJ	99162					73399

production consumption

z toho : výrobná spotreba actual production

nevýrobná " - non production (dom. hw and cooking)

52 889

27.470

12

Actual Consumption Fuel and Heat

SKUTOČNOSŤ SPOTREBY PALÍV A TEPLA ROK: 1990 - Mostársky Biezer

	GJ/t		Monthly Mesiace I.	II.	III.	IV.	V	VI.	VII.	VIII.	IX.	X.	XI.	XII.	Year total Rok
HU sized coal triedené	15,96	kt	0,446	1,028	1,418	1,649	1,425	0,081	0,207	0,173	0,370	1,411	0,855	3,437	12,570
		TJ	7,118	16,406	22,631	27,116	22,743	1,292	3,303	2,761	6,224	22,520	13,646	54,654	200,617
HU powder coa prachové	12,5	kt	2,86	1,741	0,906	0,301	–	0,413	–	–	–	0,057	1,765	0,520	8,563
		TJ	35,75	21,763	11,325	3,763	–	5,163	–	–	–	0,713	22,063	6,5	107,037
Koks coke	22,85	kt	0,04542	0,0221	0,08842	–	0,03915	0,07085	0,038	0,030	0,022	0,043	0,023	0,037	0,399
		TJ	1,04	0,50	2,02	–	0,89	0,25	0,87	0,69	0,50	0,98	0,53	0,85	9,12
LTO light oil	42,30	kt	–	–	–	0,019	–	–	–	–	–	–	–	–	0,019
		TJ	–	–	–	0,804	–	–	–	–	–	–	–	–	0,804
Zem.plyn natural gas	33,41 GJ/tis.m3	tis.m3	12,8	10,5	8,7	6,2	2,4	2,4	–	–	3,0	9,0	7,0	7,0	69,0
		TJ	0,427	0,350	0,290	0,207	0,080	0,080	–	–	0,100	0,300	0,233	0,233	2,300
Úhrn.spotreba palív total fuels		TJ	44,335	39,019	36,166	31,890	23,713	6,785	4,173	3,451	6,824	14,513	36,472	62,437	310,878
Výroba tepl.energie total heat out	1,351	TJ	32,82	28,88	26,84	23,60	17,55	5,02	3,09	2,55	5,06	18,14	27,00	46,22	236,77
	reciprocal of the boiler efficiency														

written Dec. 1989

Planned Consumption Fuel and Heat

PLÁN SPOTREBY PALÍV A TEPLA

ROK: 1990 - Mostárne 310210

	GJ/t		Month Mesiace I.	II.	III.	IV.	V.	VI.	VII.	VIII.	IX.	X.	XI.	XII.	Year total Rok
brown coal chunks H U Triedené	15,96	kt	1,0	1,0	1,0	1,0	1,4	0,3	0,2	0,3	0,9	1,0	1,4	1,5	12,0
		TJ	15,96	15,96	15,96	31,92	22,344	4,788	3,192	4,788	14,364	15,96	22,344	23,94	191,52
brown coal dust H U prachové	12,5	kt	2,5	2,2	1,5	0,8	–	–	–	–	–	1,0	1,5	1,5	11,0
		TJ	31,25	27,5	18,75	10,0	–	–	–	–	–	12,5	18,75	18,75	137,5
Koks coke	22,85	kt	0,058	0,046	0,021	0,034	0,044	0,015	0,048	0,016	0,02	0,038	0,03	0,03	0,4
		TJ	1,325	1,051	0,480	0,776	1,005	0,343	1,097	0,366	0,457	0,868	0,686	0,686	9,140
L T O light oil	42,30	kt	–	–	0,040	–	–	0,020	–	–	0,020	–	–	0,020	0,100
		TJ	–	–	1,692	–	–	0,846	–	–	0,846	–	–	0,846	4,230
natural gas Zem. plyn	33,41 GJ/tis. m³	tis. m³	25	16	14	13	12	10	10	12	13	14	16	25	180
		TJ	0,835	0,535	0,468	0,434	0,401	0,334	0,334	0,401	0,434	0,468	0,535	0,835	6,014
Úhrn. spotreba palív summer consumption of fuel		TJ	49,37	45,046	37,35	43,13	23,75	6,311	4,623	5,355	16,101	29,796	41,315	45,857	348,401
Výroba tepel. energie production of heat energy	m 1,351	TJ	36,543	33,343	27,646	31,925	17,58	4,671	3,421	4,112	11,918	22,055	31,321	33,351	257,886
HU tried. spolu HU prachov.		TJ													

74

Energy Prices 1990 and Present

Month Mesiac 1990	Electric El. energia Kčs/kWh	Sized Coal HU tried. Kčs/t	Powder Coal HU prach Kčs/t	Light oil LTO Kčs/t	Natural Gas ZP Kčs/m³	Coke Koks Kčs/t
1.	0,541	448.–	377.–	3.210.–	2,10	815.–
2.	0,554	↓	↓	↓	↓	↓
3.	0,534	↓	↓	↓	↓	↓
4.	0,555	↓	↓	↓	↓	↓
5.	0,542	↓	↓	↓	↓	↓
6.	0,561	↓	↓	↓	↓	↓
7	0,591	↓	↓	↓	↓	↓
8.	0,580	↓	↓	↓	↓	↓
9.	0,602	↓	↓	↓	↓	↓
10.	0,570	↓	↓	↓	↓	↓
11.	0,540	↓	↓	↓	↓	↓
12	0,901	747.–	449.–	7.200.–	1,92	912
3/91	0,932	747.–	449.–	7.200.–	1,92	912

Nositelem Brozus

Electric Consumption 1990

Spotreba el. energie v roku 1990 - Nositeľ Brozus

Mesiac	Plan Plán - kWh	Actual Skutočnosť - kWh	Actual ¼ hr. ¼ hod kilowat
Január	1,659.000	1,611.888	4 160
Február	1,446 000	1,326 264	3 680
Marec	1,448.000	1,375.076	3 040
Apríl	1,245.000	1,176.708	3.560
Máj	1,126.000	919.740	2.840
Jún	1,016.000	851.314	2.520
Júl	855.270	772.352	2.400
August	1,033.750	874.660	2.720
September	1,137.000	1,053.620	3 240
Október	1,539.000	1,320.204	3 640
November	1,504.000	1,415.000	3 400
December	1,501.000	1,344.024	4.200
	15,520.000	15,052.870	

July 29 1990 — 29. VII. 1990 — najviac: nedeľa

Sunday

Záznam odberu el. energie wattovej dňa ..... 198 .....

Záznam za týždeň elektromeru: číslo 4115 4179 konšt. 1000
kW max ..... konšt. .....
Diagram hodinového odberu o kWh
(Meradlo voľte podľa najväčšieho odberu).

Mostáreň BREZNO
národný podnik
BREZNO

Hodin	Elektromer (stav tej tarify, ktorá je zapnutá)	Rozdiel stavu elmeru	Rozdiel stielm. : konšt. = kWh	Diagram kWh	Prekročenie kWh	Obmedzenie kWh	Neodobraná kWh	Energetická strážca
6	022 389,7	V						
7	022 390,2	0,5	500	400				
8	022 390,7	0,5	500	400				
9	022 391,2	0,5	500	400				
10	022 391,6	0,4	400	400				
11	022 391,8	0,2	200	400				
12	022 392,0	0,2	200	400				
13	022 392,2	0,2	200	400				
14	022 392,5	0,3	300	400				
15	022 392,7	0,2	200	400				
16	022 392,9	0,2	200	400				
17	022 393,2	0,3	300	400				
18	022 393,4	0,2	200	400				
19	022 393,7	0,3	300	400				
20	022 393,9	0,2	200	400				
21	022 394,2	0,3	300	400				
22	022 394,6	0,4	400	400				
	022 396,2	N						
23	008 470,5	0,3	300					
24	008 470,9	0,4	400					
1	008 471,2	0,3	300					
2	008 471,6	0,4	400					
3	008 471,9	0,3	300					
4	008 472,2	0,3	300					
5	008 472,5	0,3	300					
6	008 473,0	0,5	500					

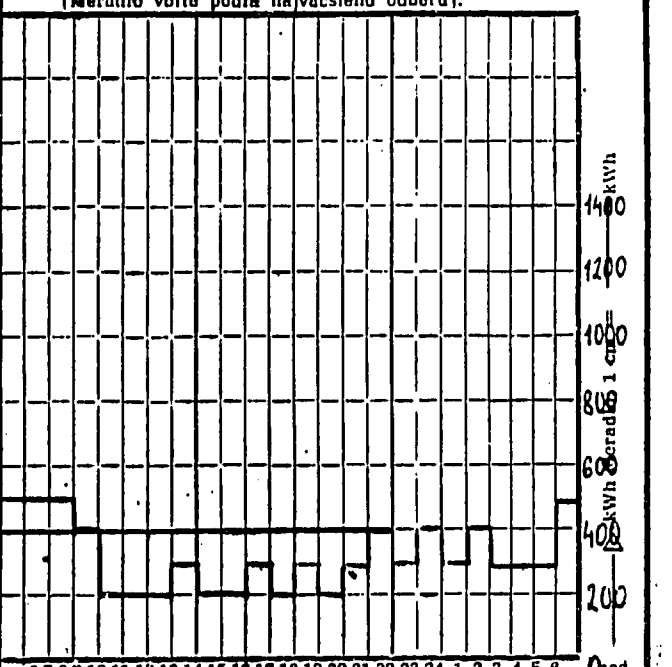

Jan. 6 1990 — 6. I. 1990 — najviac: nedeľa

Saturday

Záznam odberu el. energie wattovej dňa ..... 198 .....

Záznam za týždeň elektromeru: číslo 4115 4185 konšt. 1000
kW max ..... konšt. .....
Diagram hodinového odberu o kWh
(Meradlo voľte podľa najväčšieho odberu).

Mostáreň BREZNO
národný podnik
BREZNO

Hodin	Elektromer (stav tej tarify, ktorá je zapnutá)	Rozdiel stavu elmeru	Rozdiel stielm. : konšt. = kWh	Diagram kWh	Prekročenie kWh	Obmedzenie kWh	Neodobraná kWh	Energetická strážca
6	017 409,8	V						
7	017 411,2	1,5	1500	1500				
8	017 413,2	2,0	2000	1900				
9	017 415,0	1,8	1800	1900				
10	017 416,4	1,4	1400	1500				
11	017 417,8	1,4	1400	1500				
12	017 419,0	1,5	1500	1500				
13	017 420,2	1,2	1200	1000				
14	017 421,2	1,0	1000	1000				
15	017 422,2	1,0	1000	1000				
16	017 423,2	1,0	1000	1100				
17	017 424,2	1,0	1000	1200				
18	017 425,2	1,0	1000	1400				
19	017 426,3	1,1	1100	1500				
20	017 427,5	1,2	1200	1400				
21	017 428,7	1,2	1200	1400				
22	017 429,9	1,2	1200	1400				
	006 400,5	N						
23	006 401,8	1,3	1300					
24	006 403,1	1,3	1300					
1	006 404,4	1,3	1300					
2	006 405,6	1,2	1200					
3	006 406,8	1,2	1200					
4	006 408,0	1,2	1200					
5	006 409,1	1,1	1100					
6	006 410,4	1,3	1300					

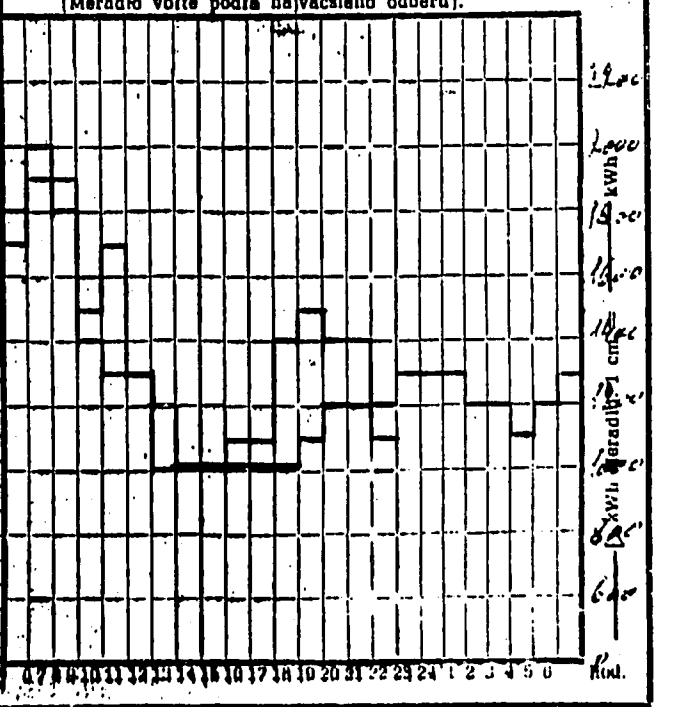

TSNP-1 M — 326600-80

Jan 10 1990 10 I. 1990

najvyšší proc.

Wednesday

Záznam odberu el. energie wattovej dňa ..... 198....

Záznam sa týka elektromeru:
číslo 41154975 konšt. 1000
kW max ..... konšt. .....
Diagram hodinového odberu o kWh
(Meradlo voľte podľa najväčšieho odberu).

Mostáreň BREZNO
národný podnik
BREZNO

Hodina	Elektromer (stav tej tarify, ktorá je zapnutá)	Rozdiel stavu elmeru	Rozdiel stielm. z konšt. = kWh	Diagram kWh	Prekročenie kWh	Obmedzenie kWh	Neodobrané kWh	Zaznamenané chybné
6	017 548,3	N						
7	017 551,8	3,5	3500	3800				
8	017 555,9	4,1	4100	4000				
9	017 559,7	3,8	3800	4000				
10	017 562,7	2,6	2600	2600				
11	017 566,4	3,3	3300	3500				
12	017 569,6	3,2	3200	3000				
13	017 572,8	3,4	3400	3000				
14	017 576,2	3,6	3300	3600				
15	017 579,6	3,4	3400	3900				
16	017 583,1	3,0	3000	3500				
17	017 586,1	3,0	3000	3000				
18	017 589,3	3,1	3100	3000				
19	017 592,2	2,9	2900	3000				
20	017 595,3	3,1	3100	3000				
21	017 598,2	2,9	2900	2600				
22	017 601,9	3,7	3700	2500				
	006 462,9	N						
23	006 464,0	2,1	2100					
24	006 466,1	2,1	2100					
1	006 468,2	2,1	2100					
2	006 470,2	2,0	2000					
3	006 472,1	1,9	1900					
4	006 474,1	2,0	2000					
5	006 476,1	2,0	2000					
6	006 478,2	2,1	2100					

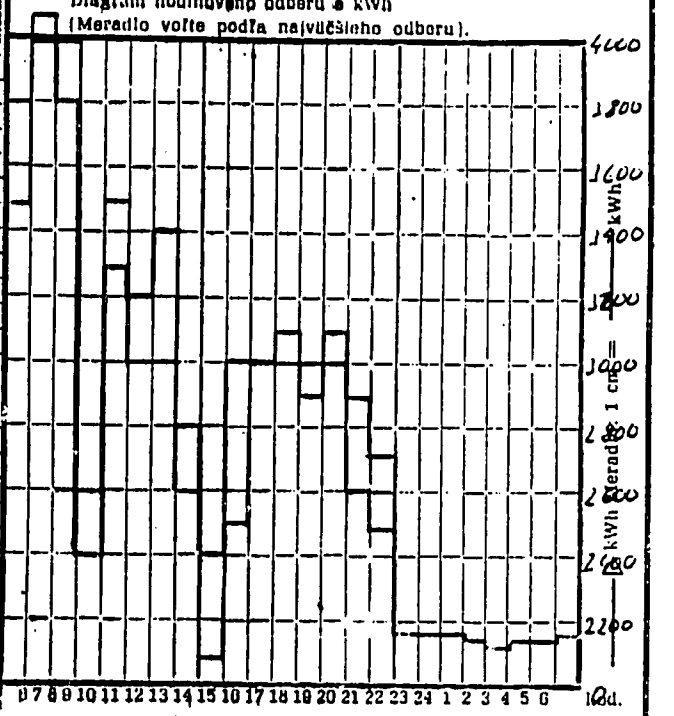

TSNP-LM — 316800-80

July 27 1990 27. VII. 1990

najvyšší proc.

Friday

Záznam odberu el. energie wattovej dňa ..... 198....

Záznam sa týka elektromeru:
číslo 41154975 konšt. 1000
kW max ..... konšt. .....
Diagram hodinového odberu o kWh
(Meradlo voľte podľa najväčšieho odberu).

Mostáreň BREZNO
národný podnik
BREZNO

Hodina	Elektromer (stav tej tarify, ktorá je zapnutá)	Rozdiel stavu elmeru	Rozdiel stielm. : konšt. = kWh	Diagram kWh	Prekročenie kWh	Obmedzenie kWh	Neodobrané kWh	Zaznamenané chybné
8	022 759,6	N						
7	022 761,1	1,6	1600	1900				
8	022 763,1	2,0	2000	1600				
9	022 765,2	2,1	2100	2000				
10	022 767,9	2,7	2700	2000				
11	022 768,8	1,9	1900	2400				
12	022 770,8	2,0	2000	2900				
13	022 772,6	1,8	1800	2000				
14	022 774,1	1,5	1500	1800				
15	022 775,2	1,1	1100	1400				
16	022 776,4	1,2	1200	1700				
17	022 777,5	1,1	1100	1900				
18	022 778,5	1,0	1000	1400				
19	022 779,3	0,8	800	1400				
20	022 780,4	1,1	1100	1300				
21	022 781,4	1,0	1000	1700				
22	022 782,5	1,1	1100	1600				
	008 461,0	N						
23	008 462,9	0,9	900					
24	008 463,8	0,9	900					
1	008 464,8	1,0	1000					
2	008 465,8	1,0	1000					
3	008 466,7	0,9	900					
4	008 467,6	0,9	900					
5	008 468,4	0,8	800					
6	008 469,0	0,6	600					

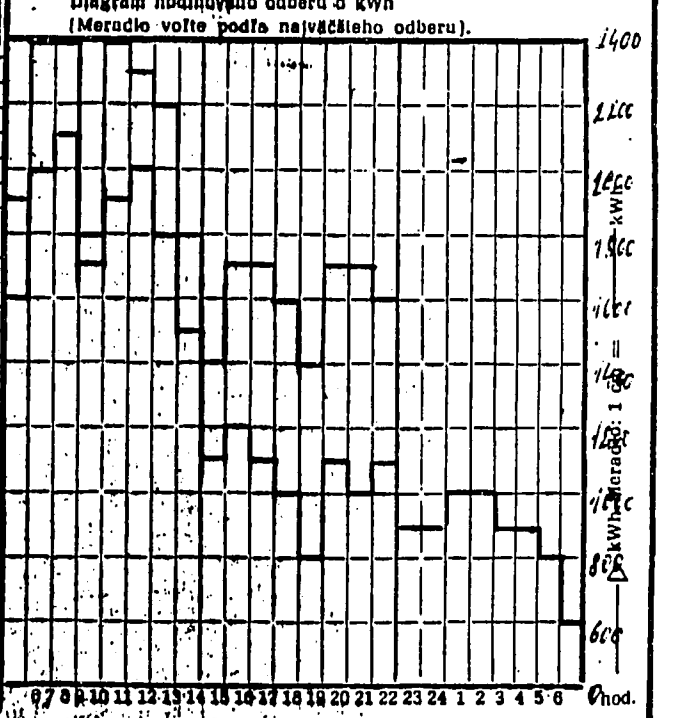

TSNP-LM — 316800-80

APPENDIX G
Photographs

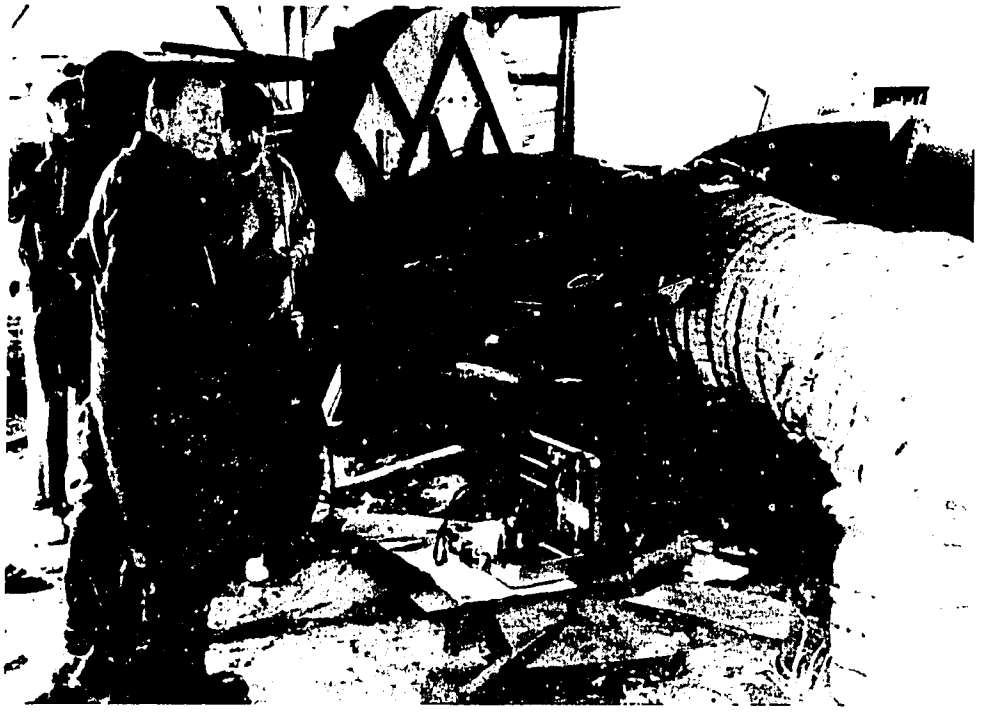

1. A plant worker (left) and Jan Medved, Power Engineer at Mosteran, conduct a combustion analysis test, demonstrating the Enerac unit.

2. Control valves, later installed in the main assembly hall. From left to right: Mr. Revallo (Manager at Electroprojekt), Mr. Klodeny (Engineer at Electroprojekt), Mr. Repper (Staff Engineer) and Mr. Medved.

APPENDIX H
List of Abbreviations

AC	= alternating current
amps	= amperes
atm	= atmosphere = 14.696 pounds per square inch
bar	= 100,000 pascals = 14.504 pounds per square inch
BTU	= British thermal unit
cfm	= cubic feet per minute
cm	= centimeter = 0.3937 inches
cm^2	= square centimeter = 0.155 square inches
CO	= carbon monoxide
CO_2	= carbon dioxide
DC	= direct current
°C	= degree Celsius T[°C] = 5/9*(T[°F] - 32)
°F	= degree Fahrenheit
°R	= degrees Rankine T[°R] = T[°F] + 460
eff	= efficiency
ex air	= excess air
Gcal	= gigacalorie = 1 billion calories = 3.968 million BTU
GJ	= gigajoules = 1 billion joules
gph	= U.S. gallons per hour
gpm	= U.S. gallons per minute
GWh	= gigawatt hours = 1 billion watt hours
H_2	= hydrogen
H_2O	= water
H_2SO_4	= sulfuric acid
hectare	= 10,000 square meters = 2.471 acres
hectoliter	= 100 liters = 26.42 U.S. gallons
Hg	= mercury
hr	= hour
Hz	= hertz = cycles per second
J	= joules
kcal	= kilocalories = 1 thousand calories = 3.968 BTU
Kcs	= 29.77/$1 US
kg	= kilogram = 2.2046 pounds
Kgcc	= 7,000 Kcal = 27,776 BTU
kJ	= kilojoules = 1 thousand joules = 0.947813 BTU
km	= kilometer = 0.621 miles
kN	= kilonewton = 1 thousand newtons
kPa	= kilo pascals = 1 thousand pascals = 0.14504 pounds per square inch
kV	= kilovolts = 1 thousand volts
kVa	= kilovolt-amperes
kVAr	= kilovars = 1 thousand volt-amperes (reactive)
kW	= kilowatt = 1 thousand watts
kWh	= kilowatt hour = 1 thousand watt hours
lbs	= pounds
liter	= 0.2642 U.S. gallons = 0.03531 cubic feet
m	= meter = 39.37 inches

m^2	= square meter = 10.76 square feet
m^3	= cubic meter = 35.31 cubic feet
mA	= milliampere = 0.001 amperes
MCal	= megacalorie = 1 million calories
metric ton	= 1 thousand kilograms = 1.1023 U.S. tons
mg	= milligrams
min	= minute
MJ	= megajoules
mm	= millimeter = 0.03937 inches
MPa	= 1 million pascals = 145.04 pounds per square inch
MVA	= megavolt-amperes
MW	= megawatt = 1 million watts
MWh	= megawatt hours = 1 million watt hours
NG	= natural gas
nm	= nanometer
Nm^3	= cubic meters at standard conditions of temperature and pressure (20°C and 1 atmosphere)
NO_X	= nitrogen oxide
O_2	= oxygen
P	= pressure
PC	= personal computer
ppm	= parts per million
psi	= pounds per square inch
psig	= pounds per square inch (gauge)
R	= thermal resistance
s	= second
SO_2	= sulfur dioxide
sq ft	= square feet
Tcal	= teracalorie = 1 trillion calories = 3.968 billion BTU
T	= temperature
V	= volts
VArs	= volt-amps (reactive)
VSD	= variable speed drive
yr	= year