PN-ABL-036
76715

ENERGY EFFICIENCY AUDIT REPORT

AUTOBRZDY PLANT
Jablonec, Czechoslovakia

JANUARY 1992

PREPARED BY: **RESOURCE MANAGEMENT ASSOCIATES OF MADISON, INC.**
Madison, WI

and

ELEKTROPROJEKT
Banska Bystrica, Czechoslovakia

U.S. EMERGENCY ENERGY PROGRAM FOR EASTERN AND CENTRAL EUROPE

U.S. AGENCY FOR INTERNATIONAL DEVELOPMENT
BUREAU FOR EUROPE
WASHINGTON, D.C. 20523

ENERGY EFFICIENCY AUDIT REPORT

AUTOBRZDY PLANT
Jablonec, Czechoslovakia

JANUARY 1992

PREPARED BY: **RESOURCE MANAGEMENT ASSOCIATES OF MADISON, INC.**
520 University Avenue
Suite 300
Madison, WI 53703
(608) 283-2880

and

ELEKTROPROJEKT
Partizanska cesta 3
975 82 Banska Bystrica
Czechoslovakia
42-88-43146

U.S. EMERGENCY ENERGY PROGRAM FOR EASTERN AND CENTRAL EUROPE

U.S. AGENCY FOR INTERNATIONAL DEVELOPMENT
BUREAU FOR EUROPE
OFFICE OF DEVELOPMENT RESOURCES
ENERGY & INFRASTRUCTURE DIVISION
WASHINGTON, D.C. 20523

USAID Contract EUR-0015-C-1006-00

Table of Contents

i Executive Summary 1

ii. Description of Energy Efficiency Program 4

1.0 Plant Description 6

2.0 Plant Energy Profile 8

3.0 Audit Description 14

4.0 Summary of Result 15
- 4.1 Short-Term Energy Efficiency Opportunities 15
- 4.2 Long-Term Recommendations 16

5.0 Plant Management/Organization 17

6.0 Implementation Evaluation 18
- 6.1 Project Status 18
- 6.2 Project Evaluation 19

List of Tables

Table 1. Summary of Energy Savings 2
Table 2. Autobrzdy Factory Energy Consumption and Costs for 1990 10

List of Figures

Figure 1. Autobrzdy Plot Plan 7
Figure 2. Steam Distribution Diagram 9
Figure 3. Compressed Air System and Distribution Diagram 12
Figure 4. Electric Power Diagram 13

List of Appendices

Appendix A
Calculation for Uncontrolled Building Heating

Appendix B
Calculation for Service Hot Water Temperature Reset

Appendix C
Calculation for Uninsulated Piping and
Condensate Return Tanks

Appendix D
Heat Recovery from the Air Compressors

Appendix E
Calculations for Additional Wall Insulation Building D-2

Appendix F
Heat Recovery from Zinc Plating Process and Rol Wash Machine

Appendix G
Air Curtain

Appendix H
Air Exhaust from the Electroplating Processes

Appendix I
Photographs

Appendix J
List of Abbreviations

i Executive Summary

The countries of Eastern Europe face unprecedented changes in both their political and economic systems. To aid in the transition to market economies, the U.S. Agency for International Development (USAID) designed the Eastern Europe Emergency Energy Program. Resource Management Associates of Madison, Inc. (RMA) is the technical assistance contractor for the Industrial Energy Efficiency component (IEEC) of the program in Czechoslovakia. RMA was provided valuable assistance by two in-country subcontractors: 1) Stredisko pro Efektivni Vyuzivani Energie (SEVEn), in the plant selection and in-country logistics; and 2) Elektroprojekt in the audit and equipment installation.

Czechoslovakia faces severe energy problems including uncertain oil supplies, pollution from burning coal, and questions about the future of nuclear energy. The Czechoslovakian industrial sector has experienced large increases in energy prices, the latest in January, 1991, bringing energy costs in-line with world energy prices. At the same time, the country has embarked upon a fundamental economic structural reform. The US Agency for International Development established the Industrial Energy Efficiency Program to help mitigate the impacts of increased energy costs on the industrial sector by providing technical support through energy audits and economic support through purchase and installation of energy conservation equipment in selected representative industrial plants.

As part of this program, an energy audit was conducted at the Autobrzdy Factory in Jablonec, Czechoslovakia. The factory produces brake components for automobiles and trucks.

Energy Audit

The Autobrzdy factory in Jablonec, Czechoslovakia was audited April 2-5, 1991. The audit team examined steam, electrical, compressed air and space heating systems to determine opportunities for energy saving improvements. The audit results showed five areas of immediate improvement which could reduce the plant's steam consumption by 6.4%, as shown in *Table 1.*

During the audit the following short-term energy conservation opportunities were identified.

1. Uncontrolled building heat can be eliminated by the addition of temperature regulating control valves to the heat radiators.

2. The heat loss from Building D-2 can be reduced by installing insulation in the building's exterior walls. Also, insulating hot pipes and valves would result in energy savings.

3. The air compressors offer an opportunity to recover the heat from the compressed air/cooling water heat exchanger and the compressor cooling water.

4. Insulating hot pipes, valves and condensate return in tanks would save energy.

5. The service hot water temperature, reset to 50 °C, and the old control valves replaced with improved thermostatically controlled valves, would result in energy savings.

Table 1. Summary of Energy Savings

DESCRIPTION	ENERGY SAVINGS GJ/year	STEAM SAVINGS Metric ton/yr	STEAM SAVINGS Kcs/year
Uncontrolled Building Heat	1932	782	476832
Added Insulation to Building D-2	370	149	90965
Heat Recovery from the Air Compressor Cooling System	718	290	177346
Uninsulated Piping and Condensate Return Tanks	1404	540	329901
Reset Service Hot Water Temperature	298	120	73260
Total	4722	1881	1,148,304

Notes: Total energy savings represents 6.2 percent of the steam production for 1990, 75113 GJ total.

Steam cost: 235.0 Kcs/GJ (610.5 Kcs/TON).

In addition, the following long-term energy conservation opportunities were defined.

1. Heat recovery from galvanizing and chrome plating exhaust hoods and the Galvatek cooling water system.

2. Autobrzdy should consider installing an air curtain on the truck entrance to building M-1.

The audit emphasis was placed on existing systems which would not be significantly affected by Autobrzdy's future plans. The five short-term improvements recommended could be implemented immediately.

The enthusiasm and support of Autobrzdy's management during the energy audit visit attests to their interest in energy conservation.

The audit team is specifying the following equipment to implement those recommendations with the best payback period within the equipment budget:

1. Four 50 mm High Pressure Steam Valves with Controller
2. Forty nine 3/8" Low Pressure Valves straight, integral sensor
3. One 3/8" Low Pressure Valve angled, integral sensor
4. Two 3/4" Low Pressure Valves straight, integral sensor
5. Insulation on 490 valves and some piping, installed.

Implementation Phase

A follow-up visit was made to the plant August 5 and 6, 1991 to determine the status of implementation of the energy conservation measures. The insulation work was complete, while installation of the control valves was ongoing. It was anticipated that all work would be completed by the end of September.

ii. Description of Energy Efficiency Program

The industrial sector in Czechoslovakia is well developed and contains many large and heavy industries. However, there are many medium size industries within the country that consume a large percentage of the industrial energy used. Many of these specific industries are made up of multiple companies and plants within the country making them ideal targets for industrial energy audit work because of the high potential of replication. Many of these medium-size plants are quite viable, but have not yet implemented energy conservation activities.

Increases in energy prices to equivalent world prices have put additional pressures on industrial firms to conserve energy. Changes within the economic system (increasing energy prices, privatization, etc.) will necessitate increased energy efficiency and reduced energy intensity of production. Along with the industrial audit program, the overall program will provide training on energy efficiency practices, measurement and energy management. This training will demonstrate the benefits of energy conservation and illustrate the advantages of making all employees aware of energy waste.

The Industrial Energy Efficiency Program is based on four distinct tasks:

1. Industrial plant screening
2. Industrial plant energy audit
3. Policy analysis
4. Implementation.

Fifteen industrial plants were screened and eight were selected to be audited. Criteria used in this selection included:

- opportunity for energy savings (with a focus on oil savings)
- potential replicability of energy saving options in similar plants or systems
- future viability of the plant in the changing economy
- size of the plant
- other activities such as joint ventures or other bi-lateral aid projects.

The energy audit activity, described in detail in this report, determined the overall energy efficiency of the plant, which was used to identify no/low cost equipment opportunities with short-term payback. An assessment was made of the technical and management capabilities and capital investment decision-making processes regarding energy conservation applications. Preparation of equipment specifications and other documents required for procurement of U.S. equipment or materials completed the audit.

In the implementation phase, equipment specified in the energy audit was procured, cleared through customs, and delivered to the plant. Also, requirements for installation of the material were identified. Where possible, this was done by plant personnel, or alternatively, by CSFR contractors. Following installation, the effectiveness of the energy conservation application was evaluated.

1.0 Plant Description

Autobrzdy is located at: Na Roli 26, 466 90 Jablonec nad Nisou, Czechoslovakia (*See Figure 1. Autobrzdy Plot Plan)*. The factory is one of several factories operated by Autobrzdy; other factories are located else where in Bohemia. The factory produces components and sub-assemblies for brake systems and engine pistons for both automobiles and trucks. The principal customer is Skoda. Castings, steel bars, and small components such as springs and rubber goods are the raw materials used at this plant. Machining, plating and assembly are carried out on a three shift schedule (6:00-14:30, 14:00-22:00, 22:00-6:00), five days a week. The second shift produces half of what the first shift produces and the third shift operates only the multiple screw machines and one machining hall. The factory employs 980 people, with the sales in 1990 of 600 million Kcs. The current demand for products is less than it was in 1990.

The factory is managed by:

Mr. Josef Menc, Director
Mr. Eduard Vrastil, Deputy Director, Technical
Mr. Victor Payer, Power Engineer
Mr. Vladimir Teplik, Assistant to the Technical Director
Mr. Pavel Bursa, Power Department.

The factory phone numbers are (422)262 70 and fax (422)245 27.

Workers manufacture components in a series of halls containing multi-station machine tools, multiple screw machines and other medium sized production machines. Two 6300 kilonewton presses form pistons from solid metal cylinders into a hollow shape. The rough piston is then centerless ground to achieve the overall diameter. The factory also processes the auto components in a galvanizing process (Galvatek), hard chrome plating, zinc plating, and pickling.

The factory processes industrial wastewater through chemical treatment, storage, settling, sand filtering, and filtering (filterpress). The sanitary wastewater produced by the plant is placed in the local sanitary sewage system.

The plant managers recognize that various plant production and machining operations will need to be changed to be more competitive in the world market. Construction of the new compressor station, steam distribution center and several machining halls have been completed or are near completion. Other projects, including the new annealing furnaces and the automated palet storage/retrieval building, are on hold pending finalization of their future plans.

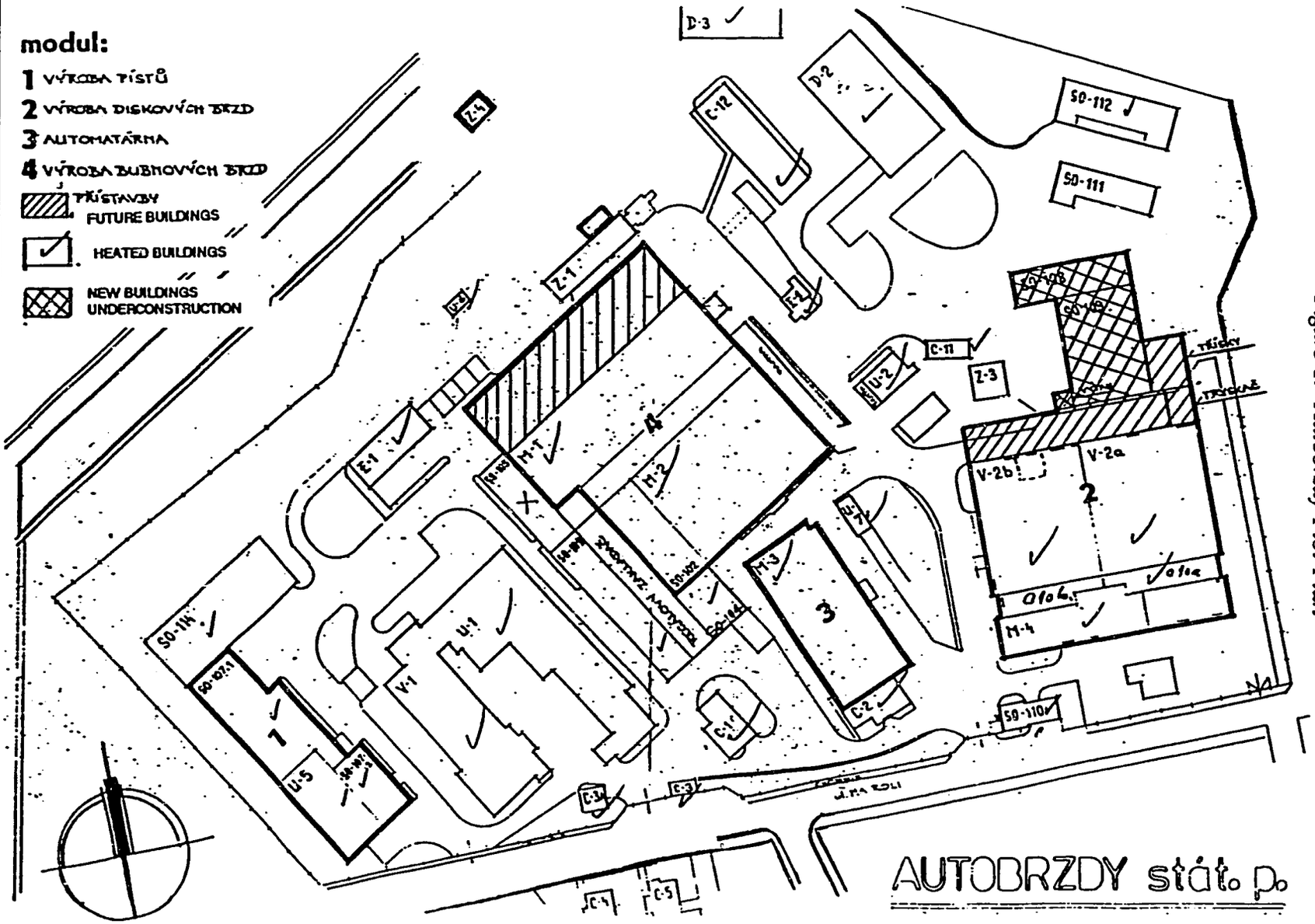

Figure 1. Autobrzdy Plot Plan

2.0 Plant Energy Profile

The factory utilizes steam heat provided by the local steam utility to provide space heating, production process heating and service hot water. Steam consumption for 1990 was 28912 metric tons. Steam enters the factory at two locations at a supply pressure that varies between 0.2 to 1.3 MPa and a temperature between 130 and 190 °C. Autobrzdy manually regulates this down in two steps from 1.3 MPa to 0.4 MPa down to 0.04 MPa. They have found automatic regulating type steam valves unreliable. The steam is used directly for space heating and indirectly to heat water in a recirculating space heat system for newly constructed buildings. The power engineer would like to convert all space heat to hot water in the future. The steam is also used to heat the electroplating process baths and metal parts washing equipment. The steam is distributed and returned as condensate at several plant distribution centers as shown in *Figure 2.* The condensate is stored in small transfer tanks and pumped to two main tanks located at the two steam utility supply points. From there, the condensate is pumped through a meter back to the utility. Autobrzdy recently completed a new steam utility distribution center in building SO-114. As part of the new construction, a water-to-water heat exchanger has been installed to recover energy from the hot condensate for space heating.

Autobrzdy is billed by the utility for the steam energy the factory consumes (see *Table 2*). The actual monthly record of steam consumption is the condensate return meter readings. The utility estimates the steam system losses are 5%, the steam enthalpy is 2.598 GJ/ton, and the condensate return temperature is 45 °C. This approach may be used to avoid potential difficulties and expense in steam flow measurement. The bill is structured so that in the future, data for actual steam temperature and pressure, and condensate temperature could be entered to provide a more accurate estimate of the steam energy consumed.

The plant has six service hot water heaters, located as shown in *Figure 2.* Water is heated to 68 °C by steam or hot condensate returned from the building space heating system. The peak domestic water demand is at 14:30 at the conclusion of the first shift. Hot water is utilized primarily in the workers' locker rooms for bathing. Control of the service hot water temperature is not reliable and has been supplied as high as 80 °C.

The plant also utilizes a small quantity of town gas for the metallurgical laboratories.

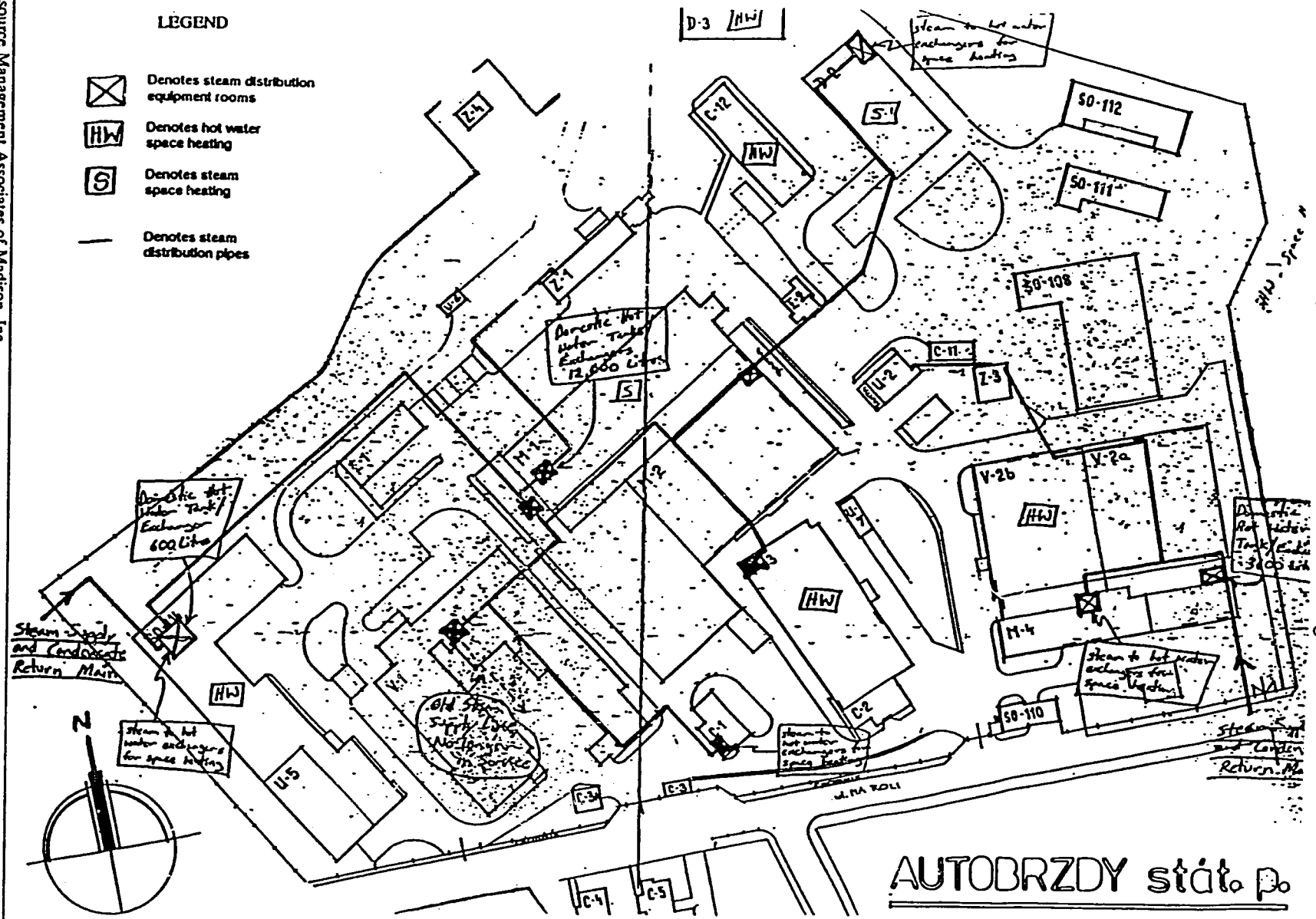

Figure 2. Steam Distribution Diagram

Table 2. Autobrzdy Factory Energy Consumption and Costs for 1990

Month	Steam (GJ)	Steam (Kcs)	Electric (kWh)	Electric (Kcs)
January	4022	896538	409605	266567
February	2947	656911	363475	244389
March	3934	876922	402745	261474
April	2402	535426	335125	233899
May	1290	287552	339010	227672
June	1285	286437	322770	219108
July	1140	254116	208670	169226
August	817	182116	330610	219354
September	1782	573149	339325	225233
October	2177	700194	389760	235462
November	2727	877092	428470	268437
December	4389	1482341	340130	347971
Total	28912	7608794	4209695	2918792

Average steam price (Kcs/ton): 263.2
Average electric price (Kcs/kWh): 0.69

Steam energy content: 2.598 GJ/ton
(Enthalpy of the steam minus the enthalpy of the condensate return)

The plant has four new air compressors capable of producing 0.6 to 0.7 MPa compressed air. The old compressors are no longer in service. The air compressor configuration is shown in *Figure 3.* Compressed air is used to clean parts and operate tooling and equipment used in production. Typically, one to two compressors can manage the entire plant air demand. Cooling water is circulated through the compressors and through an air-to-water heat exchanger on the compressed air outlet. The gained heat is rejected by a cooling tower located on the roof.

Electric power is provided by the utility and stepped down to 380 volts with several power transformers, as shown in *Figure 4.* The power supply system is equipped with a power factor correction system. The plant has on average been able to maintain a 0.95 or greater power factor. Electric consumption was 14,059,000 kWh for 1990. Electrical power is primarily used in the electroplating processes, metal annealing furnaces and machining equipment. The power distribution center is equipped with individual kWh meters for monitoring the monthly usage of each manufacturing area or building.

The factory obtains water from the local municipality and the river. The river water is treated and used as industrial water for several plant processes and cooling systems. The municipal water is used for service water and potable water.

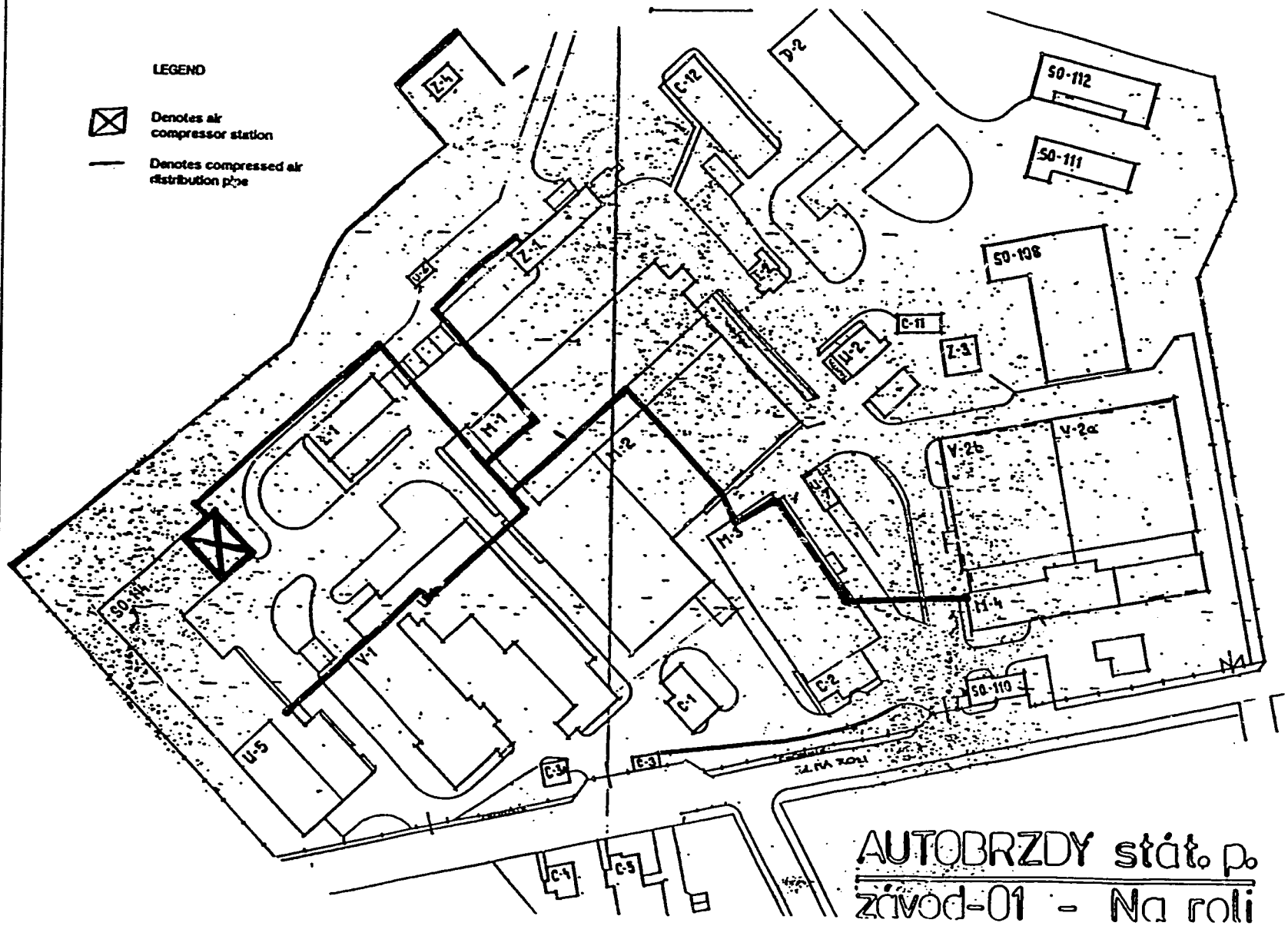

Figure 3. Compressed Air System and Distribution Diagram

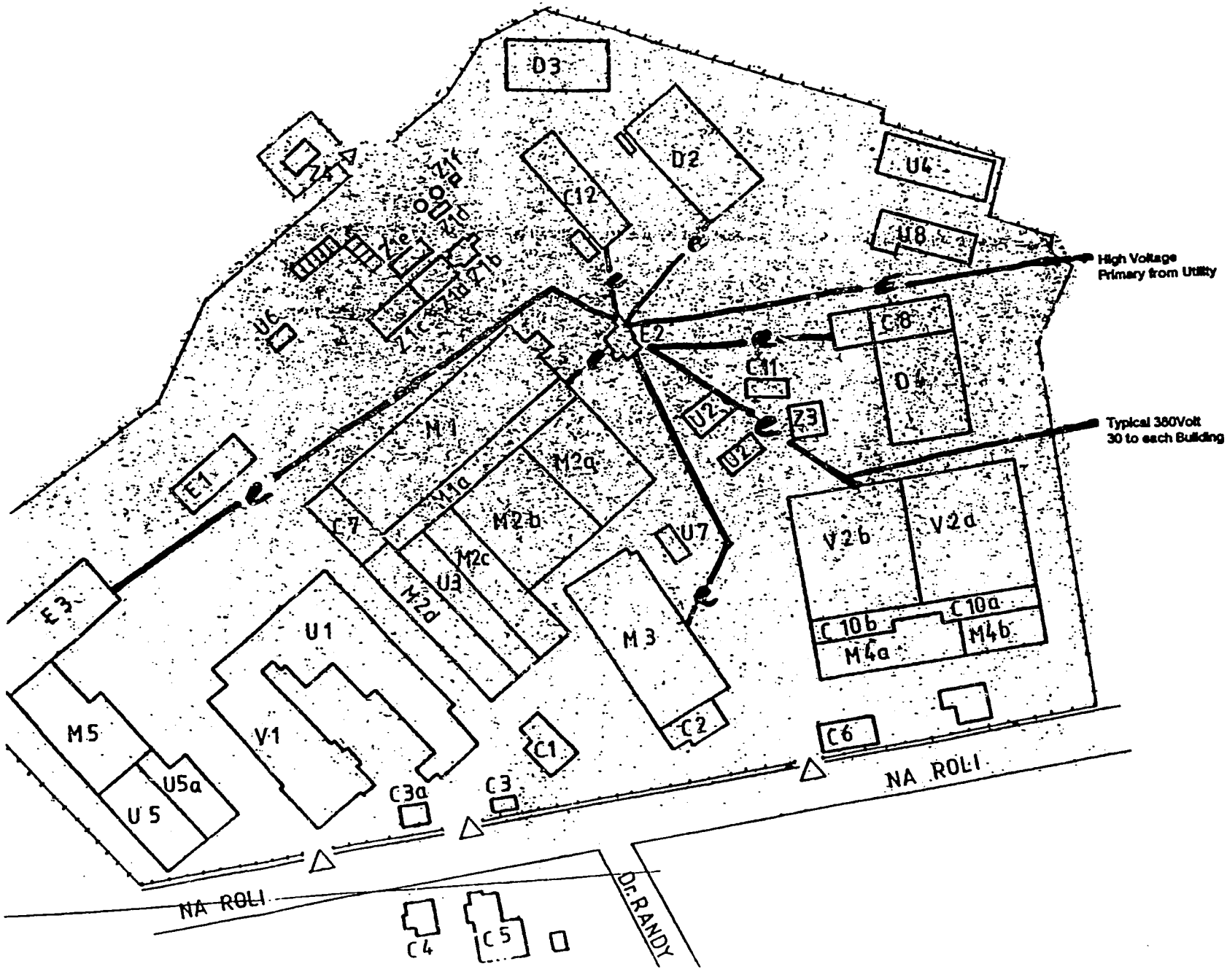

Figure 4. Electric Power Diagram

3.0 Audit Description

The audit began with a meeting on April 2, 1991 attended by Mr. Eduard Vrastil, Deputy Director; Mr. Pavel Bursa, Power Engineer; Mr. Victor Payer, Technical Director; Mr. Valdimir Teplik, Assistant to the Deputy Director; Mr. Alexs Kij, Institute for Industrial Management Automation; Mr. Lubomir Myslik of Enermy; Mr. Dries and Mr. Pavelic. Participants discussed the purpose of the plant audit. A tour of the plant determined the general layout and arrangement of the facilities and helped the auditors obtain an understanding of the operations. The auditors selected specific areas of the plant to be audited in detail. These areas/items included: piping insulation, uncontrolled building heating, building insulation, service water heating, and waste heat rejected from the processes and air compressors. The short duration of the audit limited the pipe insulation and uncontrolled space heating to one third of the areas with steam and hot water distribution stations.

Mr. Teplick assisted the audit team and also served as an interpreter. Mr. Kij and Mr. Myslik observed the audit. Mr. Payer was present about 25% of the time to answer questions and provide guidance. Mr. Payer and Mr. Teplik furnished information on the energy usage of the plant. Additional people in the plant furnished information that was requested by the audit team.

The audit team measured pipe surface temperature with an infrared digital non-contact pyrometer, and recorded pipe dimensions to determine heat losses from uninsulated steam, condensate and hot water piping and tank surfaces. (see Appendix C)

Exhaust air flows and temperatures were measured from the zinc and chrome plating processes. The use of the velometer for air flow was demonstrated during this portion of the audit. (see Appendix H)

The auditors used an ultrasonic flow meter to measure the water flow to the cooling tower from the air compressors. Water temperature was recorded and an estimate of the heat that could be recovered was made. (see Appendix D)

On Friday, the audit team presented their recommendations, including an explanation of the funds available to implement some of the recommendations, at a meeting attended by Mr. Josef Menc, Plant Director, Mr. Payer, and Mr. Teplik. Participants discussed the recommendations as well as the details of the implementation time schedule.

Mr. Menc, Plant Director, concurred with the recommendations and will send a letter to RMA prioritizing the recommended projects.

4.0 Summary of Results

The energy audit identified several short-term and long-term energy conservation concepts. The short-term projects are characterized by low or no implementation cost, short payback periods and implementation time and energy savings realization within two months. Long-term projects are characterized by a higher cost to implement and longer payback periods. Often, long-term projects involve major construction and could require 6 to 12 months to implement.

4.1 Short-Term Energy Efficiency Opportunities

Uncontrolled Building Heating: The energy loss due to over heating of the buildings is estimated to be 10% because the heating units are controlled by manual valves. Installation of automatic control valves is recommended as a way to save energy. The heat saved is estimated to be 1932 GJ/yr: 2.5% of the annual steam usage. See Appendix A for a summary of the buildings audited and heat loss calculation.

Reduced Service Hot Water Supply Temperature: The service hot water supply temperature of 68 °C is neither necessary nor desirable except for the heater serving the kitchens. Water above 50 °C is too hot to touch directly. Approximately 25% more energy is required to heat water to 68 °C instead of 50 °C. Additionally, service hot water piping losses will add 30% to the required energy for heating service water. If the hot water tanks are properly sized, the service hot water supply temperature can be reduced to 50 °C without affecting comfort. The energy savings in reducing the service hot water temperature is estimated to be 298.2 GJ/yr, as shown in Appendix B.

The existing control valves that provide steam heat to the service hot water are not properly controlling. The audit team recommends replacing the existing valves with more reliable, new thermostatically controlled valves to achieve the reduced service hot water temperature. The installed cost for four control valves is estimated to be 129,600 Kcs. Payback would be less than 1.9 years. The audit team recommends leaving the manual controls for the condensate return heat portion of the service hot water system due to the variable flowrate of due to seasonal and daily steam usage. It is also recommended that the factory install the fourth hot water heater and pipe the condensate return to a common manifold in building M-1. In this arrangement, the system may be more capable of meeting the peak hot water demand and the hot condensate will flow uniformly to all four hot water heaters in building M-1.

Insulation of Building D-2: The walls of this building are not insulated and the heat lost through the walls can be reduced by adding a layer of insulation and an outer surface of sand finished plaster. This will result in a savings of 370 GJ/yr: 0.3% of the annual steam usage, as shown in Appendix E.

Heat Recovery from the Air Compressors: A cooling tower is presently used to reject heat from cooling of the compressed air and the cooling of the compressors. The heat is rejected to the outside by the use of this cooling tower. The heat could be used to heat the building in the winter by installation of unit heaters to recover the heat. This will result in savings of 718 GJ/yr: 0.9% of the annual steam usage. See Appendix D.

4.2 Long-Term Recommendations

Air Exhaust from the Electroplating Processes: The ventilation air exhausted from the hoods over the electroplating tanks contain usable low-grade energy. The audit team measured the Galvatek process air exhaust and the hard chrome process exhaust. Calculations for the application of an air-to-air heat exchanger are provided in Appendix H. The exhausting of electroplating fumes results in a loss of heated air to the atmosphere during the heating season, and the introduction of cold make-up air into the building to maintain an air balance. Exhaust from the existing ventilation fans could be directed through a heat exchanger where heat could be transferred to fresh make-up air. A fan would be required to force the fresh air through the heat exchanger and then back into the building. The payback for the Galvatek air-to-air heat exchanger and fan system is estimated to be 17 years due to the low exhaust temperature of the exhaust and limited operating hours (one shift). The payback for the hard chrome air-to-air heat exchanger and fan system is estimated to be 9.5 years, which is better than the Galvatek payback due to a slightly higher exhaust temperature and longer operating hours (two shifts).

Air Curtain: The truck entrance located on the east side of building M-1 is a source of energy losses during the heating season. Autobrzdy does have plans to equip only forklift trucks with infrared door operators. In this way the pedestrian traffic would be eliminated and the door would be left open less. With the high traffic through this door, Autobrzdy should consider an air curtain. The heat lost through the unrestricted door is estimated to be 608.3 GJ/yr, and with an air curtain, 282.1 GJ/yr. This would result in an annual energy savings of 326.2 GJ/yr. See Appendix G. Payback would be approximately 2.5 years (installed equipment cost of 202,500 Kcs and deducting annual electrical consumption cost).

5.0 Plant Management/Organization

Autobrzdy has several projects under way to modify and change the plant. Plant personnel do recognize the need to improve energy efficiency. Management should consider implementing a plan to carry out both short-term and long-term energy conservation. This plan should include training of people in the plant to recognize the importance of energy savings. A formal plan with identifiable people responsible for training and implementing an energy conservation program at the plant needs to be developed.

A management position with the title energy manager is a good way to focus attention on the need to conserve energy. The person with this title may be an existing manager who is given the additional responsibility. Regular meetings of the managers (for the purpose of discussing ways to save energy) help to insure that energy conservation has a high priority.

Significant savings in energy used for space heating can be made by changes in the way people use the work space. Turning off manual valves to prevent over heating and closing open doors are examples of the things people can do to reduce the waste of heat.

6.0 Implementation Evaluation

The visit to Autobrzdy on 5 August was to determine the status of the energy conservation measures funded for implementation. At a meeting attended by Messr. Dries, Erickson, Anderson, Malek, Payer, Teplik and Vrastil the following items were discussed.

6.1 Project Status

The insulation of the piping is complete and the owner is satisfied with the work. A review of the piping was made on 6 August and the work is satisfactory. Picture number one was taken where valves and pipe were insulated. Autobrzdy will send a letter to RMA with copies of the invoices for payment. The letter will include acceptance of the work by Autobrzdy. The following is a summary of the energy conservation recommendation installations.

1. Control Valves for Domestic Water Heating: The Honeywell valves are on order and have not been shipped. The promised date for shipment was late July. Mr. Malek will continue to follow up on the valves. The owner will install the valves by the end of September. Picture number two, in Appendix I, was taken of the piping in the room where the valves are to be installed.

2. Control Valves for Building Heating: The valves are at the Autobrzdy plant. Installation is scheduled to be completed by Autobrzdy people by the end of September. A Danfoss catalog was given to Mr. Payer for his files. Picture number three, in Appendix I, was taken of the Danfoss valves being unpacked.

Additional discussions of energy conservation opportunities were focussed on projects where equipment was not specified.

1. Wall Insulation for Building D-2: New quotations for the work will be obtained based on 5 cm insulation thickness. A discussion of how to attach the insulation to the building resulted in several ides but none were known to be feasible for the local contractors. A meeting with a contractor is scheduled to resolve this problem. Based on the new quotation from the contractor of 407,000 Kcs for the total insulation and exterior finish, Appendix E of the draft report had been revised. The payback for the insulation cost alone is 1.3 years and the recommended cost contribution by AID will be 118,750 Kcs. This additional funding is recommended as this demonstration project had a good potential for replication all over the country. This project will not be undertaken under the current EEP, due to lack of additional funds. RMA will apply to AID for approval of the funds for the wall insulation.

2. Air Curtain: This proposal was discussed and the owner would like this conservation measure reviewed because more building spaces are to be served by fork lift trucks.

6.2 Project Evaluation

The owner will collect energy consumption data and this will be compared to the energy used before the changes were made. This data will have to be adjusted for variations in the weather and plant operations.

Mr. Dries will send a letter to Erie Controls advising them that Autobrzdy is interested in manufacturing control valves for Erie in Europe.

APPENDIX A
Calculations for Uncontrolled Building Heating

Table A1
Buildings and Spaces
(Partial listing)

Building or Space Number & Use Numbers refer to site plan.		Area Meters Square	Volume Meters Cubic	Heat Loss Thousands BTU/hr
D-2	Steel Storage and Service 39 steam radiators use only 20 auto valves (1)	1,599	6,088	367
SO-114	Air Compre. Water Treat. 10 water radiators and 2 unit heaters	864	7,776	464
M-3	Machining 30 steam radiators	1,340	10,560	1,441
V-2b	Zinc Plating 28 hot water radiators	1,615	16,150	1,914
V-2a	Machining 32 hot water radiators	1,615	16,150	1,914
Total	(120 radiators)			6,102

The estimated saving by using automatic temperature control valves is 10 percent of the annual heat used.

The saving equals: 6,102,440*0.10*3000 hr/yr *1055= 1931.4 GJ/yr
This is 2.4 % of the annual steam usage.

The saving in crowns is 1931.4 * 247.4 Kcs/GJ = 477,828 Kcs/yr

The cost for 120 valves is estimated at 120 x 2700 Kcs/valve = 648,000 Kcs.
The payback is 648,000/477,828 = 1.4 years.

(1) The number of valves required in building D-2 is reduced because the heat loss is reduced by adding insulation to the outside walls of the building. See Appendix E.

Buildings M-4 and C-12 are offices also with uncontrolled heating and have more radiators per square meter than the other buildings and will have a longer payback; estimated at 2 to 3 years.

The control valve specification should be for valves that are self contained and have a thermostatic operator. This type of valve doesn't require electric power to operate. The size range is from 1/2 to 1 inch nominal pipe size and flow from 5 to 10 gpm. Some valves may require a remote sensor. The pressure is less than 150 psi, temperature 200 °F. The steam pressure is low 5 to 15 psi and flow 5 to 20 lbs/hr.

The manufactures data sheets for a type of valve that could be considered for this application are in this appendix. The manufactures are Braukmann, Erie, Johnson Controls, and Honeywell. The Braukmann valve model VT110 is the style that is desired.

See attached catalog sheets.

ENERGY-SAVING NON-ELECTRIC TEMPERATURE CONTROL for LOW PRESSURE STEAM and HOT WATER SYSTEMS

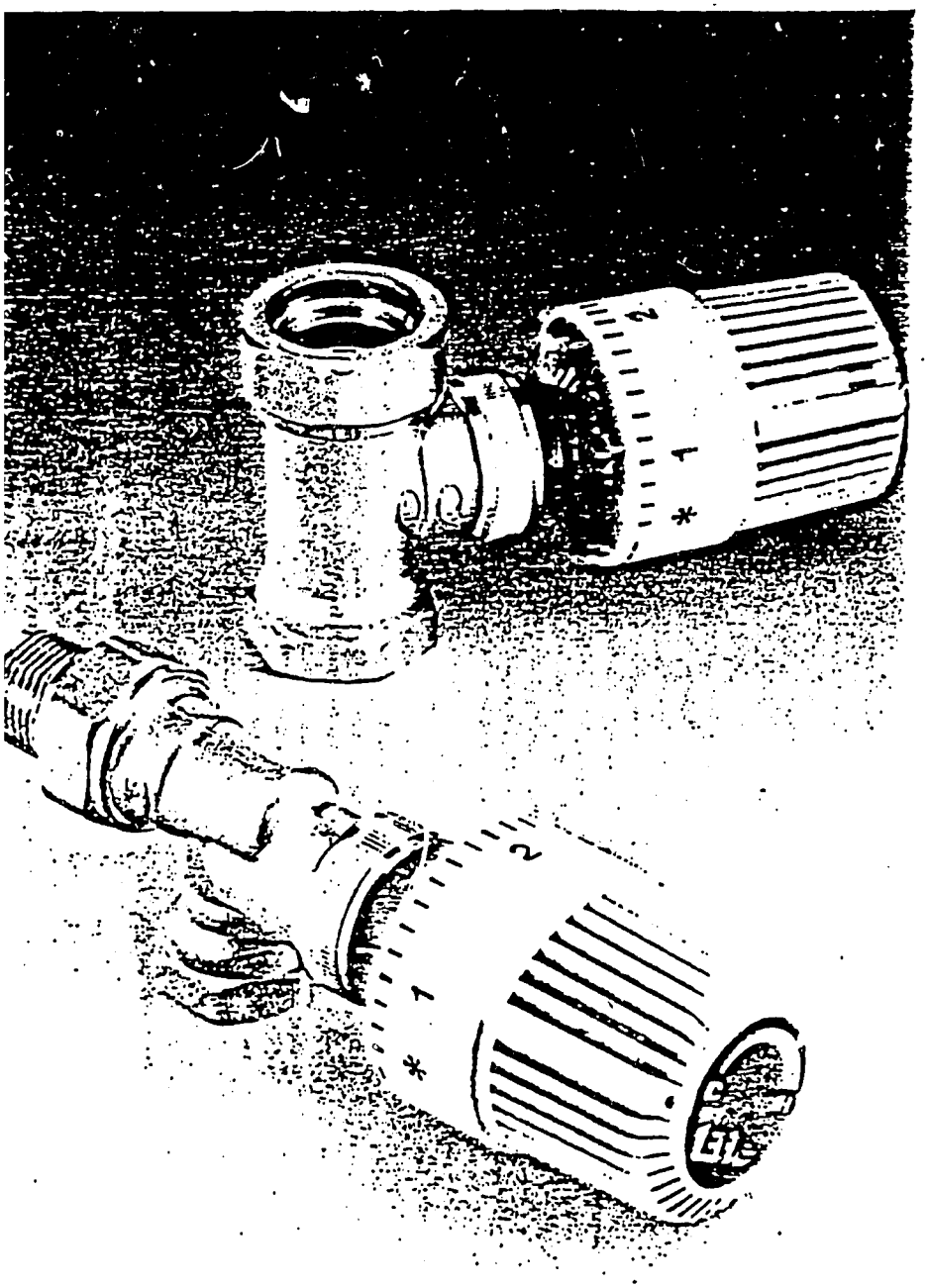

Erie's non-electric valves are the most simple and cost-effective means of automatic temperature control on the market. Used extensively throughout Europe for years to reduce soaring heating costs, this type of fully automatic valve is ideal for retrofit and new installation in apartments, office buildings, schools, hotels, hospitals, factories and govenment buildings. Overheating is eliminated, and each heating unit is balanced according to local demand.

Totally self-contained, Erie's valves require no electrical connections. The thermostatic head of the control contains a heat-sensitive liquid that expands as the temperature rises, operating the valve to shut off the flow of water or steam through the radiator. The valves are easily installed directly into individual freestanding radiators, convectors and baseboard heaters — usually without changes to existing piping. Installation costs are reduced because valves can be completely installed by plumber or steamfitter alone.

OTHER FEATURES

- Precise temperature control — 1° F hysteresis.
- Micrometer-type adjustment provides even room temperature for maximum comfort.
- Set points can be locked and limited.
- Eliminates energy waste from open windows.
- Adjustable day and night indicator settings.
- 5-year limited warranty.
- One-trade installation.
- Direct mount or remote sensor thermostats.
- Threaded connections — ½" or ¾" NPT sizes.
- Fully automatic, non-electric operation.
- Optional tamper-proof locking collar protects valve from unauthorized adjustment or removal of control.

ERIE CONTROLS

SPECIFICATIONS

Applications: 250° F (120° C) Hot Water and 10 PSI Steam

Temperature Range: 48 - 81° F (9 - 27° (

Maximum System Pressure: 200 PSI (Water) 10 PSI (Steam)

Maximum Working Temperature of Liquid-Filled Thermostatic Heads: The thermostatic head may not be exposed to a higher temperature than 122° F (50° C) or lower than –4° F (–20° C).

Approximate Temperatures for Numerical Settings of 573 Thermostatic Heads:

△	•	1	2	3	4	5
37° F	48°	52°	61°	70°	75°	81° F

Valve Body:
- Forged Brass – Nickel Plated
- Stainless Steel Stem
- Stainless Steel Spring
- Overcoated Disc with Back Seat
- Replaceable "O" Ring Gland without Draining System

HOW TO ORDER

Erie's thermostatic radiator valves consist of direct or remote sensor thermostats coupled with the appropriate valve. Choose from Erie's selection designed to suit virtually any hydronic heating system. Order each item by part number.

VALVE BODIES

571 ANGLE

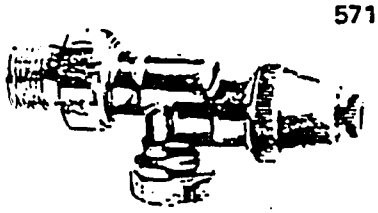

Number	C_v	Size
571A6	1.2	1/2"
571A7	2.4	3/4"

572 STRAIGHT

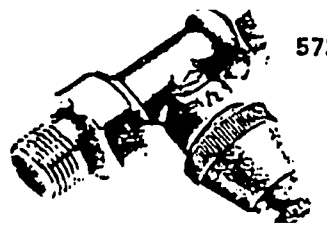

Number	C_v	Size
572A6	1.2	1/2"
572A7	2.4	3/4"

THERMOSTAT

DIRECT MOUNT, SELF CONTAINED

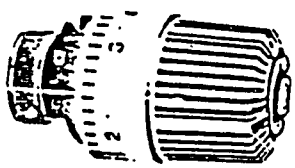

Number	Temp. – Range
573A6	48 - 81° F (9 - 27° C)

REMOTE SENSOR

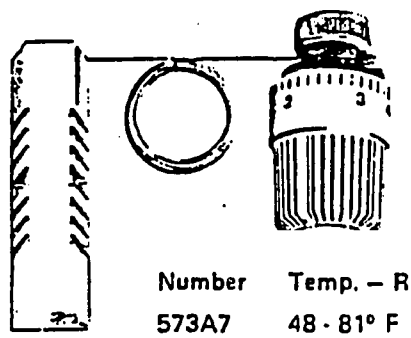

Number	Temp. – Range	Capillary Length
573A7	48 - 81° F (9 - 27° C)	6 feet (2m)

TAMPER-PROOF LOCKING COLLAR

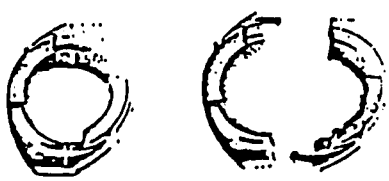

574A206

VALVE CARTRIDGE

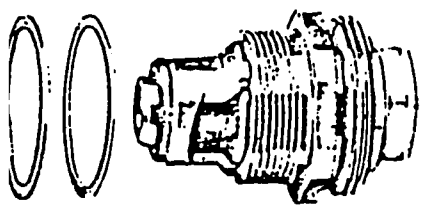

"O" Ring Gland (Can be replaced without draining system) 574A205

Complete Cartridge with "O" Ring Gland 574A204

ERIE CONTROLS

ERIE MANUFACTURING COMPANY

U.S.A.: 4000 South 13th Street/Milwaukee, WI 53221/(414) 483-0524/800-558-3916/Telex: 2-6867/Fax: (414) 483-6610

Canada: P.O. Box 880/Stouffville, Ontario LOH 1LO (416) 640-2363/Telex: 06-986645

Belgium: Erie Controls Europe, N.V./Industriepark Wolfstee/B-2410 Herentals, Belgium/011-32-14-214096/Telex: 84633186

Printed in U.S.A. TRV-2, 12/87 © Copyright, ERIE CONTROLS

ERIE CONTROLS

NON-ELECTRIC THERMOSTATIC VALVES

SPECIFICATIONS

Applications: 250° F (120° C) Hot Water and 10 PSI Steam

Temperature Range: 48 - 81° F (9 - 27° C)

Maximum System Pressure: 200 PSI (Water) 10 PSI (Steam)

Maximum Working Temperature of Liquid-Filled Thermostatic Heads: The thermostatic head may not be exposed to a higher temperature than 122° F (50° C) or lower than −4° F (−20° C).

Approximate Temperatures for Numerical Settings of 573 Thermostatic Heads:

△	*	1	2	3	4	5
37° F	48°	52°	61°	70°	75°	81° F

Valve Body:
- Forged Brass – Nickel Pla
- Stainless Steel Stem
- Stainless Steel Spring
- Overcoated Disc with Back Seat
- Replaceable "O" Ring Gland without Draining System

VALVE BODIES

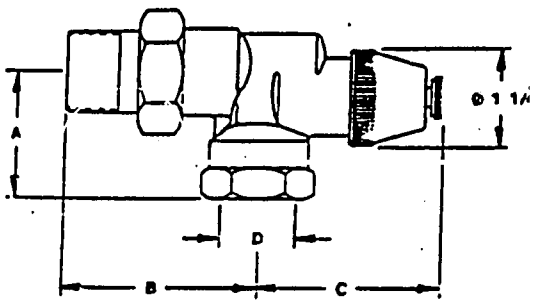

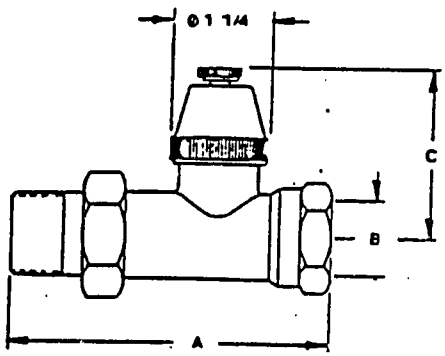

Number	Size	A	B	C	D
571A6	1/2 NPT	1 1/2	2 1/8	2 3/8	1/2 NPT
571A7	3/4 NPT	1 5/8	2 1/2	2 7/16	3/4 NPT

Number	Size	A	B	C
572A6	1/2 NPT	3 3/4	1/2 NPT	2 1/4
572A7	3/4 NPT	4 1/8	3/4 NPT	2 1/4

FOR OVERALL HEIGHT WITH HEAD FROM CENTER LINE, ADD 2-1/2" TO "C" DIMENSION.

THERMOSTAT

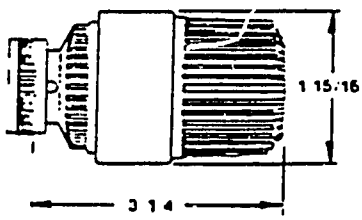

573A6

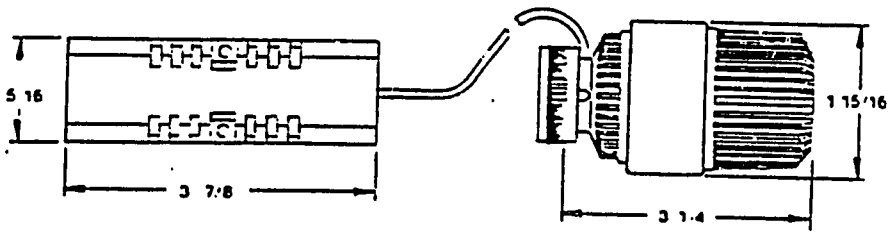

573A7

Capillary Length – 6 feet (2m)

ERIE MANUFACTURING COMPANY
U.S.A.: 4000 South 13th Street/Milwaukee, WI 53221/(414) 483-0524/800-558-3916/Telex: 2-6867/Fax: (414) 483-6610
Canada: P.O. Box 880/Stouffville, Ontario LOH 1LO (416) 640-2363/Telex: 06-986645
Belgium: Erie Controls Europe, N.V./Industriepark Wolfstee/B-2410 Herentals, Belgium/011-32-14-214096/Telex: 84633186

28

NON-ELECTRIC THERMOSTATIC VALVES

- Self-contained, non-electric thermostatic valves for individual room temperature control.
- Hot water heating systems or steam heating to 10 psi.
- Angle or straight-thru bodies.
- 1/2" and 3/4" NPT.
- Direct mount and remote bulb.
- Can be set to high/low limit or fixed temperature.
- Temperature range 48°–81° F.
- NPT female inlet/male union outlet.

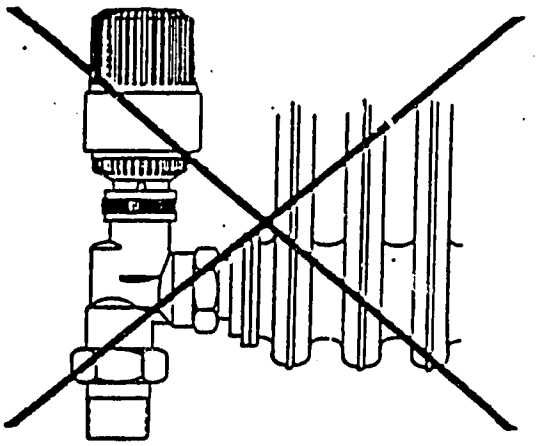

(NOT RECOMMENDED)

- Improve comfort and fuel economy.
- Freeze protection.
- No electricity required.
- Five year limited warranty.

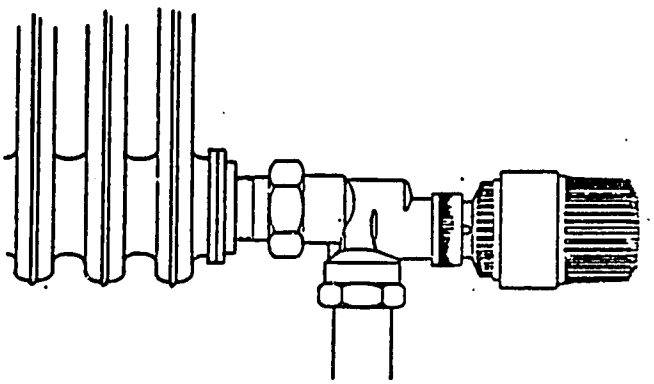

– CAUTION –
DO NOT MOUNT IN A VERTICAL POSITION. Mount horizontal or use remote bulb thermostat.

PRESSURE DROP GRAPH

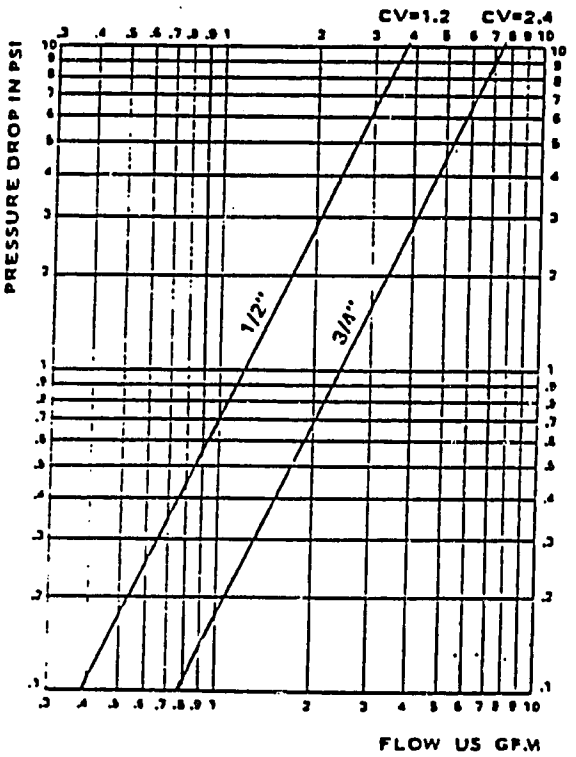

PRESSURE DROP ACROSS VALVE

(Based on fully open valve)

	PSI		FEET OF WATER	
GPM	1/2"	3/4"	1/2"	3/4"
1	.7	.2	1.6	.5
1.5	1.6	.4	3.7	.9
2	2.8	.7	6.5	1.6
2.5	4.3	1.0	9.9	2.3
3	6.2	1.6	14.3	3.7
4	11.0	2.8	25.4	6.4

ERIE CONTROLS
IE MANUFACTURING COMPANY
.A.: 4000 South 13th Street/Milwaukee, WI 53221/(414) 483-0524/800-558-3916/Telex: 2-6867/Fax: (414) 483-6610
ada: P.O. Box 880/Stouffville, Ontario LOH 1LO (416) 640-2363/Telex: 06-986645
gium: Erie Controls Europe, N.V./Industriepark Wolfstee/B-2410 Herentals, Belgium/011-32-14-214096/Telex: 84633186

BRAUKMANN Thermostatic Zone Valves

Non-electric Type
For both Hot Water and Steam

VT 110
VT 105

TYPICAL SPECIFICATION FOR VT 110/V 105

Braukmann Thermostatic Radiator Valve VT 110 or VT 105 for hot water and steam, angle or straightway type for max. 248°F (120°C), 14 PSI steam or 150 PSI hot water and max. 40 ft. water column differential pressure.

Body of brass, nickel-plated disc, seal and 1 O-ring for valve, 2 O-rings for spindle packing — resistance to 300°F (150°C). The upper spindle packing is renewable without draining the heating system. Valve opening spring outside of water or steam-filled space, supplied with protective handle cap for manual operating.

Cover plate C 110 should be used for T 111 controls installed in baseboard radiators to cover the gap made during the installation.

Thermostat Control (T 111) made of scratch-resisting plastic material of neutral pearl-white and light-grey color with low thermal conductivity. Highly sensitive thermostat with excess temperature safety device. Range of regulation: +46 to +89°F (+8° to +26°C). The Thermostat should be completely closed without O-ring or other packings.

TYPICAL SPECIFICATION FOR VT 110 F

VT 110 F for hot water and steam, angle or straightway type for maximum 248°F (120°C), 14 PSI steam or 150 PSI hot water and maximum 40 ft. water column differential pressure.

Body of brass, nickel-plated, disc, seal and 1 O-ring for valve, 2 O-rings for spindle packing — resistant to 300°F (150°C). The upper spindle packing is renewable without draining the heating system. Valve opening spring outside of water or steam-filled space, supplied with protective handle cap for manual operating.

Thermostat Control T 111 F made of scratch-resistant plastic material of neutral pearl-white and light-grey color with low thermal conductivity.

Highly sensitive thermostat with excess safety device. Range of regulation between +48 and +95°F (+9° and (+28°C). Capillary tube 6'8" long. Bulb guard G 110 should be used when deemed necessary. The guard is made of aluminum, primed ready to paint.

TYPICAL SPECIFICATION FOR VT 110 Z

VT 110 Z for hot water and steam, angle or straightway type for maximum 248°F (120°C), 14 PSI steam or 150 PSI hot water and maximum 40 ft. water column differential pressure.

Body of brass, nickel-plated, disc, seal and 1 O-ring for valve, 2 O-rings for spindle packing — resistance to 300°F (150°C). The upper spindle packing is renewable without draining the heating system. Valve opening spring outside of water or steam-filled space, supplied with protective handle cap for manual operating.

Thermostat Control T 111 Z for convectors, baseboards and radiators. Valve connector and remote control unit made of highly polished scratch-resistant plastic material. Range of regulating: +48 to +95°F (+9° to +28°C).

Capillary tube 6'8" long.

TYPICAL INSTALLATION FOR THE BRAUKMANN THERMOSTATIC RADIATOR VALVES

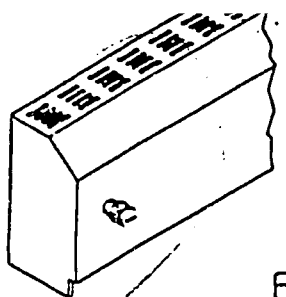

BASEBOARD

Braukmann Thermostatic Radiator Valves VT-110 are easily installed in baseboard radiation. The valve body is installed directly in the line and the thermostat head is mounted through the front cover for ease of installation and operation. Types VT-110-F and VT-110-Z may also be applied if desired.

FIN TUBE COMMERCIAL RADIATOR

Braukmann Valve type VT-110-F sensing bulb is mounted underneath the radiation, with the thermostat installed inside the valve enclosure or access door.

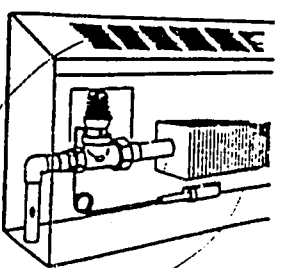

CONVECTOR

Braukmann Thermostatic Radiator Valve VT-110-Z with remote control thermostat is installed with the valve body inside the convector unit. The remote thermostat is mounted on the wall. The capillary tube may be installed inside the wall.

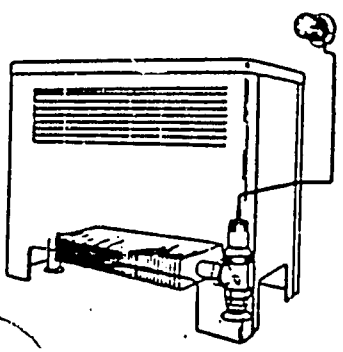

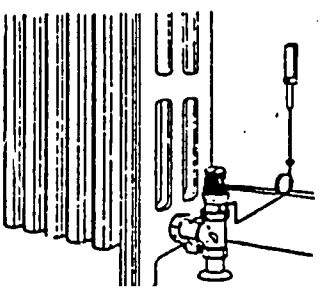

FREE STANDING RADIATOR

Braukmann Thermostatic Radiator Valve type VT-110-F is readily installed on existing cast iron radiators for either hot water or steam systems. The sensing bulb should be located away from the radiation to assure accurate reading of the thermostat. The illustration shows a typical hot water installation.

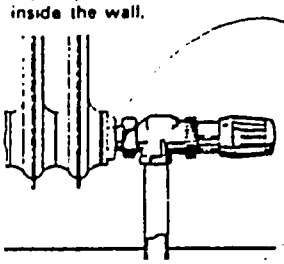

FREE STANDING RADIATOR

Braukmann Thermostatiac Radiator Valve Type VT 105 is readily installed on existing cast iron radiators for either hot water or steam systems.

The illustration shows a typical installation, but of course the connection could also be at the top of the radiator and if necessary with T 111 F or T 111 Z Controls.

Alterations without prior notice.

Printed in U.S.A.

BRAUKMANN
BRAUKMANN CONTROLS CORPORATION
56 Harvester Avenue Batavia, New York 14020

BRAUKMANN Thermostatic Zone Valves

Non-electric Type
For both Hot Water and Steam

VT 110
VT 105

BRAUKMANN'S ALL PURPOSE THERMOSTATIC RADIATOR VALVE FOR BOTH HOT WATER AND STEAM

Sizes 1/2" - 1¼" angle and straight, with thread or sweat connections. 3 styles — with direct control VT 110, VT 105, remote control VT 110 F or adjustable remote control VT 110 Z.

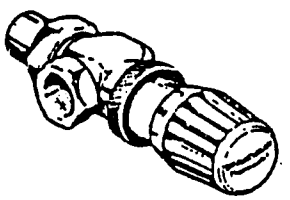

VT 105 Horizontal Angle Type

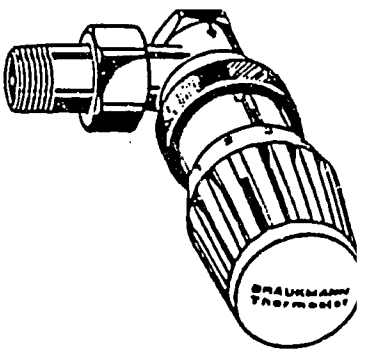

VT 110 Angle Type

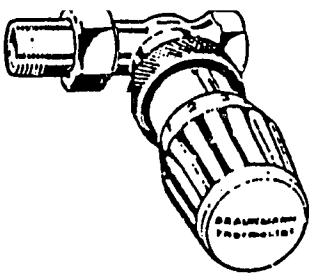

VT 110 Straightway Type

APPLICATION

Braukmann Non-Electric Thermostatic Radiator Valves are designed for both hot water and steam in same valve and are completely self-contained and require only one trade installation. This modulating valve measures and controls area temperature with an accuracy of appr. ± 1°F and is virtually trouble-free. The Braukmann radiator valves make it possible to control each room temperature individually, eliminates having to open windows to control comfort and in addition will most likely reduce your fuel bills by as much as 20% or more.

It is interesting to note that we at Braukmann have made the utmost use of modern technology and materials, incorporating them in our valve seat disc.

The disc compound is the most important feature of this valve. It is of high temperature resistant material and approved for use with steam up to 248°F (120°C) with a further built-in safety range, therefore eliminating the need for a separate valve to handle this medium.

We prefer elastic material against the metal seating rather than metal. This allows a tight shut-off.

The Braukmann valve may be applied to all types of heating units — baseboard, convectors, free standing radiators — and may control a loop, a unit or a zone. It may be designed into a new or an existing hot water or steam system. The proper valve size for each unit, loop or zone may be selected by using the details on valve size, shape and the performance values included in this brochure.

SIZES AND CONNECTIONS:

1/2", 3/4", 1" and 1-1/4" size in angle and straightway type.

Inlet — female thread or solder adaptor.

Outlet — male thread untion or solder union connection.

CONSTRUCTION:

Valve body (V 110 and V 105) made of stamped brass or brass casting, nickel plated, valve cone seal and O-rings for valve case and spindle packing resist temperatures of up to 300°F (150°C), the upper spindle packing can be replaced during plant operation without draining the heating system. Valve opening spring is located outside the water filled space. Supplied with protective cap, which can be used for manual opening or closing of valve during installation.

Thermostatic Control (T 111) made of highly polished, mar-proof plastic material of a neutral pearl-white and light-grey tint with a low thermal conductivity. Highly sensitive thermostat with excess temperature safety device. Setting control with guide mark numbers. Range of regulation 46 — 89°F (8°C — 26°C).

Thermostatic Control with outside sensing bulb (T 111F) made of highly polished, mar-proof plastic material of a neutral pearl-white and light-grey tint with a low thermal conductivity. Highly sensitive thermostat with excess temperature safety device. Setting control with guide mark numbers. The range of regulation between the mark * and the guide mark number 5 can be selected freely by changing the position of the setting control to any point between +48 and +95°F (9° and 28°C). The length of the capillary tube is 6'8", otherwise the execution is similar to that of T 111, suitable for all types and sizes.

Bulb guard G 110 should be used when deemed necessary. The guard is made of aluminum, primed ready to paint.

Thermostatic Control with remote adjustment (T 111 Z), for enclosed convectors and baseboard radiators. Valve connector and remote control unit made of highly polished, mar-proof plastic material of a neutral pearl-white and light-grey tint. The regulating range between the mark * and guide mark 5 can be selected freely by changing the position of the setting control to any point between +48 and +95°F (9° and 28°C). The length of the capillary tube is 6'8", otherwise the execution is similar to that of T 111, suitable for all types and sizes.

Alterations without prior notice.

Printed in U.S.A.

BRAUKMANN
BRAUKMANN CONTROLS CORPORATION
56 Harvester Avenue Batavia, New York 14020

28'

BRAUKMANN Thermostatic Zone Valves

Non-electric Type
For both Hot Water and Steam

VT 110
VT 105

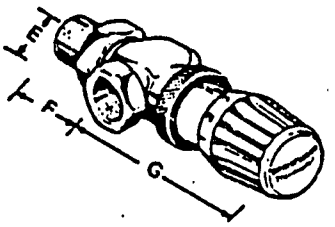

type VT 105
horizontal angle type

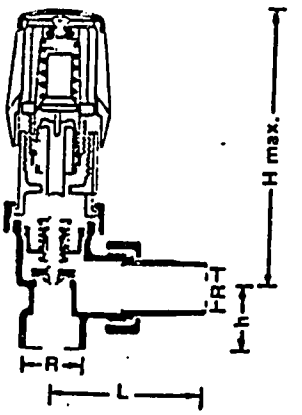

type VT 110
angle type

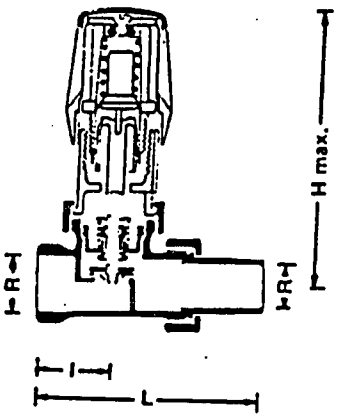

type VT 110
straightway type

C110

G110

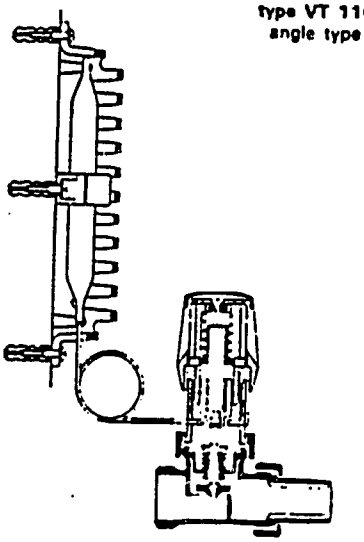

type VT 110 F
with remote sensor
as angle or straightway type
(guard extra)

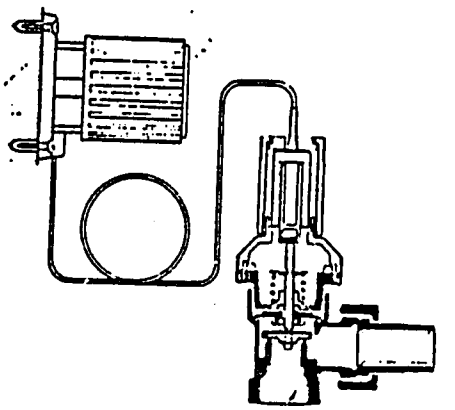

type VT 110 Z
with remote adjustment wall mounted
as angle or straightway type

PRESSURE AND TEMPERATURE RATINGS:

Maximum initial flow temperature	248°F (120°C)
Working pressure maximum (hot water)	150 PSI.
Working pressure maximum (saturated steam)	14 PSI.
Differential pressure maximum	40 ft. water column (17 PSI.)

The differential pressure is limited to 17 PSI mainly because of the increasing noise above this level. (Ask for maximum differential pressure.)

However, in areas where higher pump heads are encountered, we recommend you reduce the differential pressure in the effected zones by using a differential pressure regulator or a back pressure valve.

Pipe size	R	Angle type ½"	¾"	1"	1¼"	Straightway type ½"	¾"	1"
Dimensions	L	2⅜"	2⅝"	2 19/16"	—	3¾"	4"	4 23/32"
	I	—	—	—	—	15/32"	1⅜"	1⅜"
VT 110	H max.	4¾"	4¾"	4¾"	—	4¾"	4¾"	4¾"
	h	19/16"	1⅛"	1 11/32"	—	—	—	—
	E	1"	1⅛"	1¼"	2¼"			
VT 105	F	2¼"	2½"	3"	3½"			
	G	5⅛"	5¼"	5⅜"	5¼"			

Alterations without prior notice.

Printed in U.S.A.

10/75

BRAUKMANN
BRAUKMANN CONTROLS CORPORATION
56 Harvester Avenue Batavia, New York 14020

29

BRAUKMANN Thermostatic Zone Valves

Non-electric Type
For both Hot Water and Steam

VT 110
VT 105

CAPACITY OF BRAUKMANN THERMOSTATIC RADIATOR VALVES FOR HOT WATER GPM

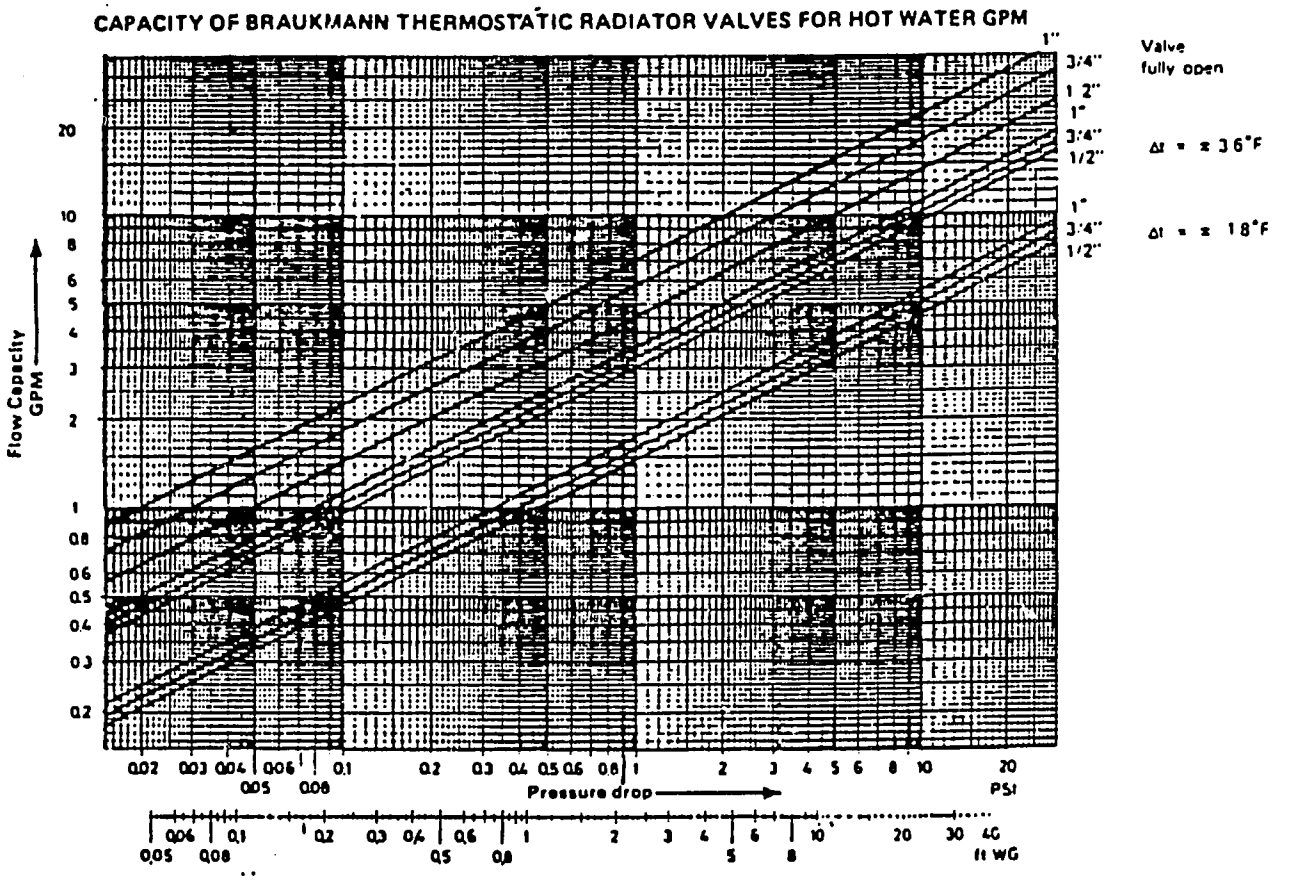

CAPACITY FOR LOW PRESSURE STEAM

Valve Size	Pressure drop across valve								
	BTU/Hr Valve fully open			BTU/Hr 7.2°F. Throttling Range			BTU/Hr. 3.6°F. Throttling Range		
	3 psi	5 psi	7 psi	3 psi	5 psi	7 psi	3 psi	5 psi	7 psi
1/2"	100,000	120,000	127,000	65,000	76,000	82,000	31,500	37,000	39,500
3/4"	126,000	149,000	162,000	69,000	82,000	88,000	33,500	40,000	44,000
1"	151,000	179,000	193,000	71,500	86,000	92,500	36,000	46,500	46,500

1 psi pressure = 2.3 feet water

Alterations without prior notice.

Printed in U.S.A.

30

ERIE

NON-ELECTRIC RADIATOR VALVES

PART NUMBER	DESCRIPTION	QUANTITY	LIS	SUGGESTED CONTRACTOR
571A6	1/2" Angle Body	1-36	$23.48	$11.74
		37-107	21.62	10.81
		108+	20.90	10.45
571A7	3/4" Angle Body	1-36	31.32	15.66
		37-107	28.84	14.42
		108+	27.72	13.86
572A6	1/2" Straight Body	1-36	17.96	8.98
		37-107	16.56	8.28
		108+	15.88	7.94
572A7	3/4" Straight Body	1-36	27.94	13.97
		37-107	25.76	12.88
		108+	24.72	12.36
573A6	Direct Mount Thermostat	1-36	27.68	13.84
		37-107	25.48	12.74
		108+	24.52	12.26
573A7	Remote Sensor Thermostat	1-36	62.14	31.07
		37-107	57.24	28.62
		108+	54.98	27.49
574A206	Locking Device	1-36	1.60	.80
		37-107	1.46	.73
		108+	1.42	.71

Post-it™ brand fax transmittal memo 7671 | # of pages ▸ 5

To Pete	From Bob Overman
Co. Dries Assoc.	Co. Wisconsin Supply
Dept.	Phone #
Fax #	Fax #

WISCONSIN SUPPLY CORP.
6800 Gisholt Dr.
Madison, WI 53713
608-222-7799

JOHNSON CONTROLS

JCI Regelungstechnik GmbH

JCI Regelungstechnik GmbH · Max-Planck-Straße 16 · 6382 Friedrichsdorf/Taunus

Mr.Charles Fafard
Resource Management Associates
520 University Avenue
Madison,WI 53703
USA

International Division
Max-Planck-Straße 16
D-6382 Friedrichsdorf/Taunus
Tel.: (49-61 72) 73 5-0
Telex: 4 15 817 jcif d
Telefax: (49-61 72) 73 5-149

1.0

Ihr Zeichen / Your Ref.	Ihr Schreiben vom / Your Letter of	Unser Zeichen / Our Ref.	Nebenstellen-Nr. / Ext.-No.	Datum / Date
		91/MM/22		26.3.1991

Re: Proposal Nr. 475/1/CPRS/058/00
Project: Pragolaktos, Prague, ČSFR

Dear Sirs,

please find in the enclosure the proposal for above mentioned project. We believe that it will fulfil your expectations in energy savings.

We look forwards to being of service to you and to the U.S.AID and would like to assure you of our best cooperation to make your projects a success.

Please feel free to contact us in case of any questions

Very truly yours

JCIR Prague
D.Mach

Hindenburgstraße 8, 4300 Essen 1, Telefon (02 01) 24 00, Telex 857 309, Telefax (02 01) 24 00 81, Cable: JCIR, Amtsgericht Essen: HRB 5128, Geschäftsführer: Peter Plenker, Luigi Andens, Robert Nelolicka
Commerzbank AG Essen

Proposal No. : 475/1/CPRS/058/00
Project : Pragolaktos
Location : Prague,CSFR
Date : March 19,1991

4.4 Thermostatic valves for radiators

According to the exact specification of the thermostatic valves received from Mr.Dvoracek from Pragolaktos,we propose following valves:

Type	Quantity	Price
3/8" 2460	180pcs.	USD 1.440,-
1/2" 2462	120pcs.	USD 1.010,-
3/4" 2464	50pcs.	USD 465,-
Thermostat.head	350pcs.	USD 2.680,-
1/2" 2419	12pcs.	USD 133,-
3/4" 2421	10pcs.	USD 118,-
1" 2513	1pc.	USD 24,-
Thermostat.head	23pcs.	USD 364,-
	Total pos.4.4	USD 6.234,-

APPENDIX B
Calculations for Service Hot Water Temperature Reset

Service hot water use at a factory is above that of an office building; an office building is typically 3.8 to 7.6 liters per day per employee. The service hot water use at Autobrzdy is estimated to be 11.4 liters per day per person. This hot water is used for employees in the locker rooms, lavatories and hand washing stations. The required hot water temperature to provide comfort is 50 °C. Above 50 °C, the water is to hot to directly touch. The actual hot water supply temperature was measured in Building M1, in a ninth floor washroom and was 68 °C. The energy savings for resetting the hot water supply temperature to 50 °C was calculated as follows:

Table B1
Service Hot Water Reset Temperature Calculation

Liters/day/person:	18.9
Employees:	980
Days per year:	260
Measured hot water temperature(°C):	68
Reset hot water temperature(°C):	50
Liters per year of hot water:	2893254
Heat saved (from 68 °c to 50 °c) (GJ/yr):	217.9
Heat saved including 30% line losses (GJ/yr):	283.3
Steam saved(GJ/yr):	298.2
Steam saved(Kcs/yr):	70077

Thermostatically Controlled Valve Specification:

A thermostatically controlled valve capable of regulating the steam provided to the hot water heat exchanger with a remote temperature sensing element. Designed for 0.04 to 0.5 MPa steam pressure, 2 inch nominal pipe line size, flanged connections, and adjustable temperature set point from 40 to 80 °(1 °C graduations). Include threaded well for insertion of the temperature element into the hot water tank. Distance between tank and the valve: 2 meters. Total quantity required, for building M-1: four(4). See attached sheets for valve selection and prices.

Trerice

MANUFACTURERS OF
TEMPERATURE & PRESSURE INSTRUMENTS / CONTROLS

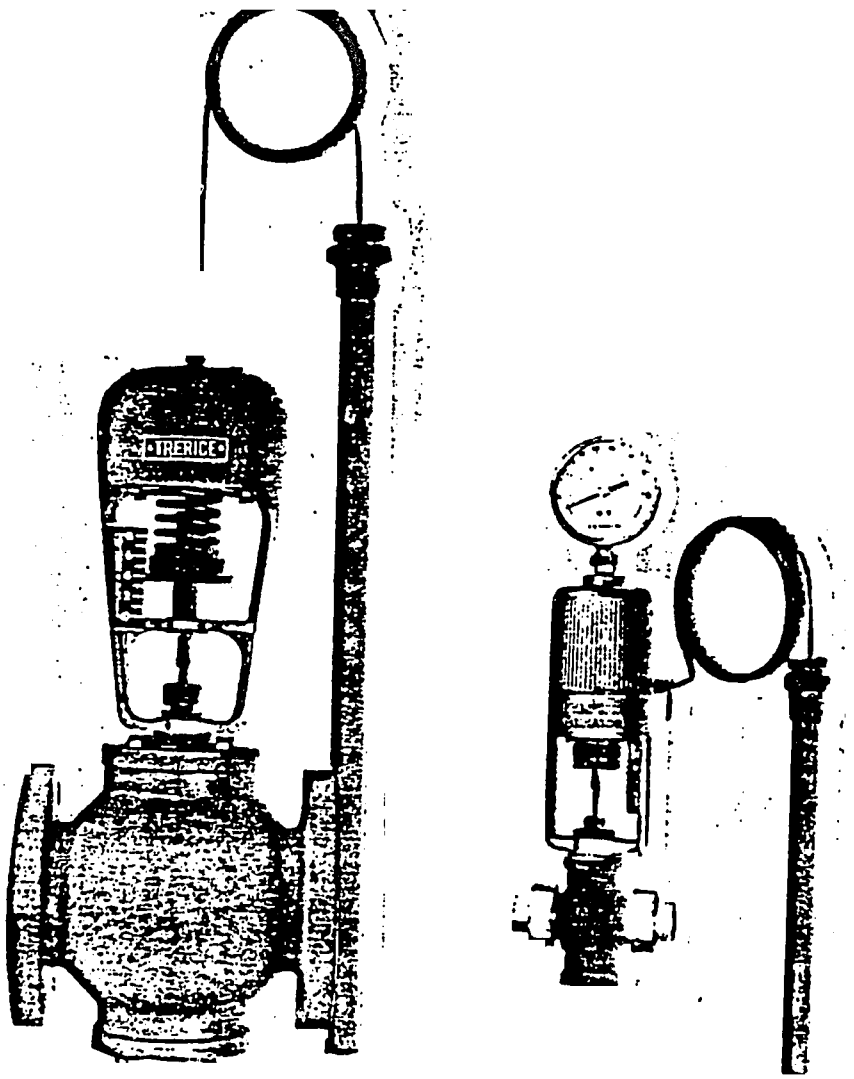

SELF-CONTAINED · ·
TEMPERATURE REGULATORS

36

CATALOG NO. 150U

TEMPERATURE REGULATORS
91000 & 91400
VALVE BODIES

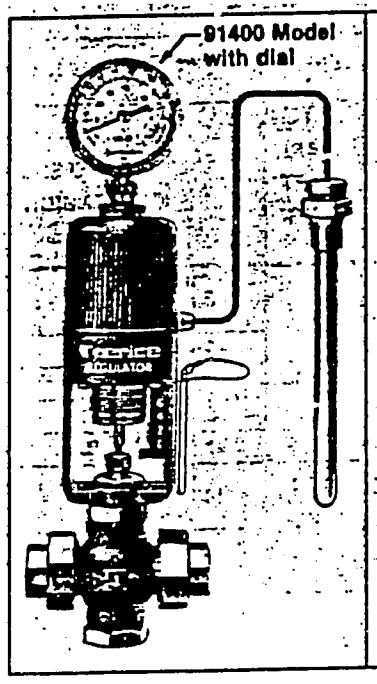

91000 & 91400 COMPACT ACTUATOR CONSTRUCTION

The compact actuator uses precision die cast housings for exceptionally accurate alignment of axis, with durability to retain this alignment for the life of the unit. Stampings can deform and cause binding of the required free moving stem.

The adjustment screw is dry lubricant impregnated sintered bronze for corrosion resistance and ease of adjusting for the life of the unit.

The stem seals are self-lubricating teflon and stainless steel spring loaded for durable and maintenance free service. The bellows and spring are enclosed for extra protection against adverse environments.

An adjusting bar is attached to the unit to be readily available if change of setting is desired.

The adjustable dial indicator mounted on the top of the compact indicating 91400 model rotates and tilts for positioning at the best viewing angle. This dial indicates the actual bulb internal temperature that is generating the valve operating thrust and in no way inhibits the valve action.

SIZES: ⅛" thru 2" Two Way Bronze.
½" thru 2" Three Way Bronze.
1" thru 2" Two and Three Way 316SS.
⅛" thru 1" Two Way Steel.
2½" thru 3" Two Way Cast Iron

COMPACT ACTUATOR VALVE BODIES — BRONZE — SINGLE SEAT

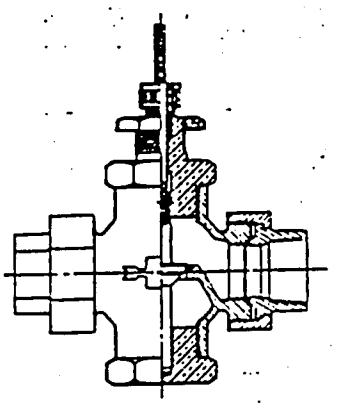

VALVE BODIES — SINGLE SEAT

MATERIAL	SIZE: PORT NOMINAL	SIZE: NPT CONN.	VALVE NUMBER: STEM MOVES IN TO CLOSE On Temp. Rise Heating	REF.	VALVE NUMBER: STEM MOVES IN TO OPEN On Temp. Rise Cooling	REF.	TRIM	MAX. INLET PSIG	Cv	END TO END DIM.
410°F 250 PSI Cast Bronze Body With Malleable Iron Union Ends	⅛"	½"	AAS	A02	BAS	A03	SS	250	.17	4.8
	3/16"		ABS	A05	BBS	A06			.35	
	¼"		ACS	A08	BCS	A09			.7	
	⅜"		ADS	A11	BDS	A12			1.4	
	½"		AES	A14	BES	A15	SS	250	2.8	4.8
	¾"		AGS	A19	BGS	A22		140	5.6	5.6
	1"		AIS	A26	BIS	A30		80	8.4	6
	1¼"		AKS	A36	BKS	A41	SS	50	15	7.2
	1½"		AMS	A47	BMS	A52		35	21	7.7
	2"		AOS	A58	BOS	A63		20	33	8.6

Trerice

TEMPERATURE REGULATORS
DIMENSIONS

Nos. 91000 & 91400 ½" thru 2" NPT sizes with union ends. 2½" & 3" sizes with 125 psi standard flanged ends.

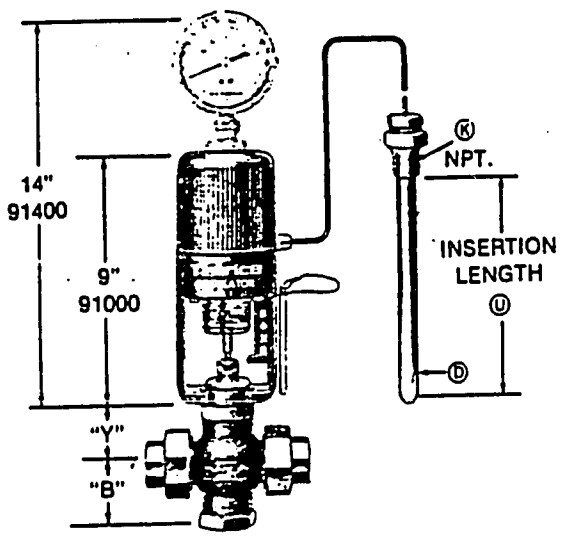

Nos. 91000L sizes 4" and up and 91000L 3 Way, 2½" and up.

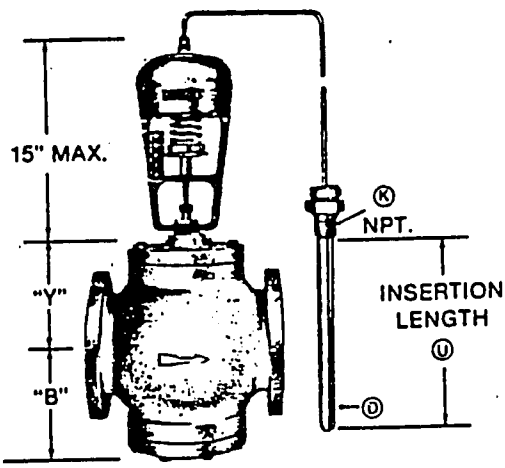

DIMENSIONS		
NPT	"Y"	"B" 3 WAY
½	1.8	1.8
¾	2.3	2.3
1	2.3	2.3
1¼	2.6	2.8
1½	2.6	3.5
2	3.1	4.1

DIMENSIONS		
NPT	"Y"	"B" 3 WAY
2½	4.6	7
3	5.4	8
4	5.6	10
5	6.7	
6	7.8	

BULB DIMENSIONS — 91000 — 91400 — 91000L

ACTUATOR TYPE	Plain or Adjustable Connection				Union Connection with Bushing				Union Connection with Well			
	Ⓓ Dia.	Ⓚ NPT	Ⓐ Bulb Lgth. 8 ft.	Ⓐ Bulb Lgth. 16 ft.	Ⓓ Dia.	Ⓚ NPT	Ⓤ Insertion Lgth. 8 ft.	Ⓤ Insertion Lgth. 16 ft.	Ⓓ Dia.	Ⓚ NPT	Ⓤ Insertion Lgth. 8 ft.	Ⓤ Insertion Lgth. 16 ft.
*91000 *91400	1	1	13	13	1	1	12¼	12¼	1⅛	1¼	12¼	12¼
†91000L	1¼	1¼	27	29	1¼	1¼	26¼	28¼	1⅜	1½	26¼	28¼

*For 20 ft. tubing Ⓐ = 16", over 20 ft. to 36 ft. Ⓐ = 20". †Ⓐ increases by 1" for each 4 ft. tubing increment.

SPECIAL ACTUATORS WITH SMALLER BULB AND FITTING

COMPACT ACTUATOR ONLY — (Thru 3" 2 Way - Thru 2" 3 Way Only)

When the actuator housing temperature will always remain lower than the control bulb temperature in operation, a smaller ¾" x 9" nominal length is available when necessary. Insertion Ⓤ length is 8¼". Union connection bulbs have ¾" NPT threads on bushing & 1" NPT threads on well. Not available in plain connection. Use standard bulb numbers, but state smaller dimension Ⓤ length required when specifying bulb.

NO. 91000L LARGE ACTUATOR ONLY — (4" & Up 2 Way And 2½" & Up 3 Way Only)

When the actuator housing temperature will always remain lower than the control bulb temperature in operation, a smaller 1¼" x 13" nominal length is available when necessary. Insertion Ⓤ length is 12¼". Union connection bulbs have 1¼" NPT threads on bushing & 1½" NPT threads on well. Not available in plain connection. Use standard bulb numbers, but state smaller dimension Ⓤ length required when specifying bulb.

Trerice

TEMPERATURE REGULATORS
TYPICAL APPLICATIONS
NOS. 91000 & 91400

INSTALLATION OF NO. 91400 REGULATOR ON STORAGE TYPE H.W. HEATER

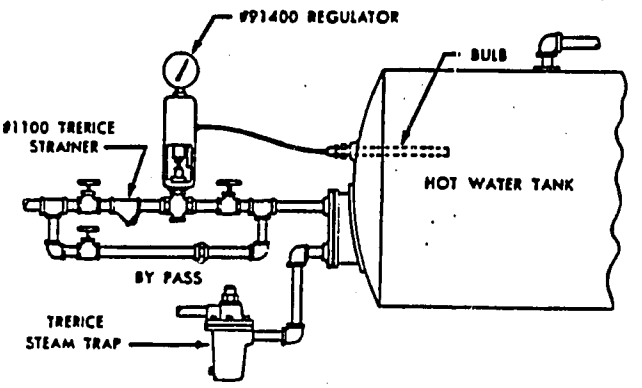

INSTALLATION OF #91400 REGULATOR CONTROLLING FUEL OIL TEMPERATURE

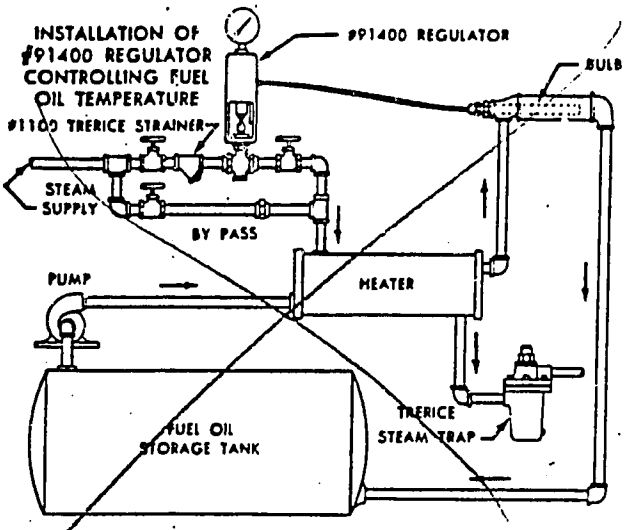

INSTALLATION OF NO. 91400 REGULATOR CONTROLLING TEMPERATURE OF PLATING OR PICKLING TANK.

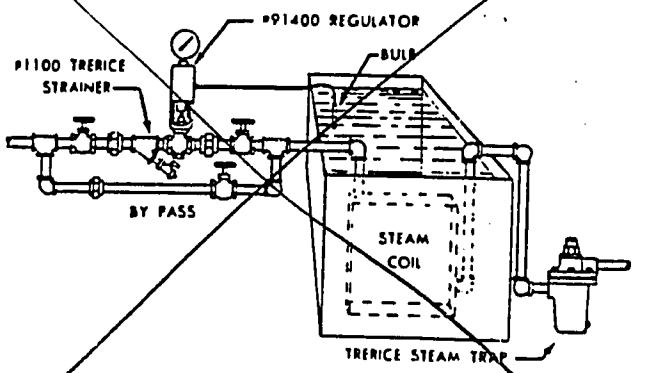

INSTALLATION OF NO. 91000 REGULATOR CONTROLLING COOLING WATER JACKET TEMPERATURE ON AIR COMPRESSOR

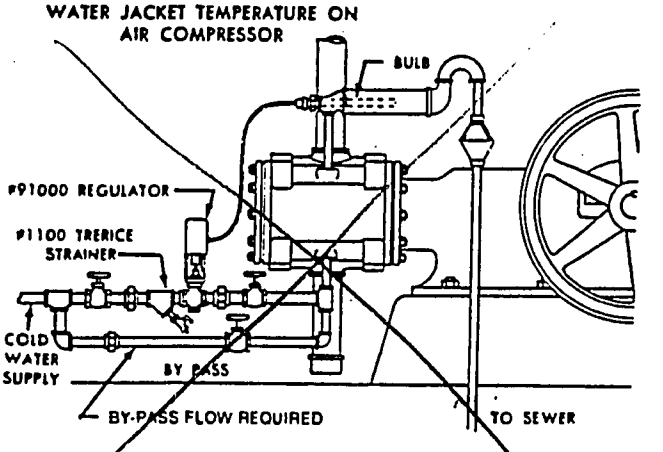

INSTALLATION OF NO. 91000 3-WAY VALVE CONTROLLING COOLING WATER TEMPERATURE ON A DIESEL ENGINE

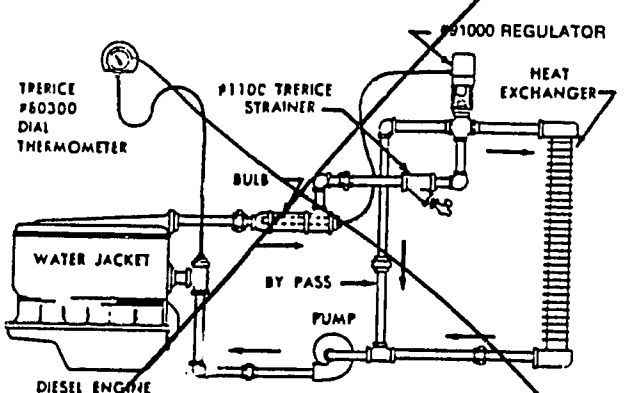

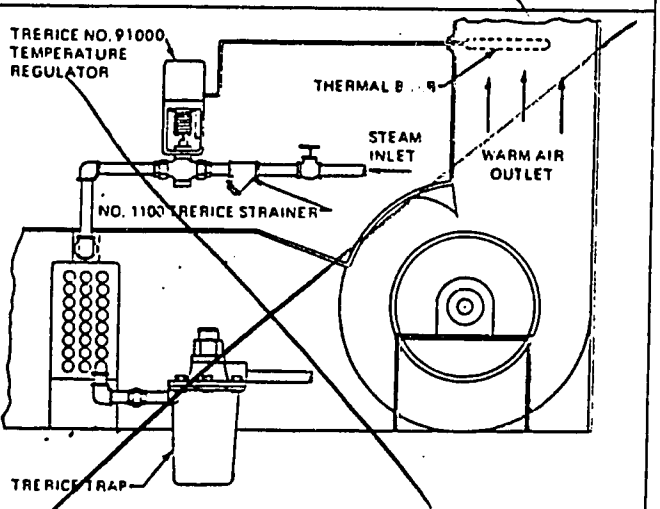

NO. 91000 TEMPERATURE REGULATOR CONTROLLING HEATING COIL IN AN AIR CIRCULATING UNIT.

Trerice

CAPACITY TABLES
STEAM FACTOR Sv

STEAM PRESSURE PSIG		VALVE STEAM FACTOR
Valve Inlet	*Back PSI At Valve Outlet	Sv
0	Vac.	23
2	1	12
	0	17
	VAC	28
5	4	13
	2	22
	0	27
10	8	20
	5	31
	0	42
15	10	35
	5	47
	0	54
20	15	38
	10	51
	5	60
30	25	43
	20	59
	10	78
40	30	66
	20	89
	15	96
50	40	72
	30	98
	25	107
60	50	78
	40	107
	30	126
75	65	86
	50	131
	35	157
100	80	136
	65	173
	50	199
125	100	167
	80	216
	60	248
150	125	183
	100	248
	75	290
175	150	197
	120	280
	85	339
200	160	262
	130	333
	100	381
225	180	293
	140	384
	110	430
250	200	325
	150	435
	125	472

SEE VALVE BODY TABLES FOR Cv RATINGS AVAILABLE

$$Q = Cv\,Sv$$

Q = Saturated steam in pounds per hour.
Cv = Valve coefficient.
Sv = Steam factor.

OBTAIN STEAM CAPACITY

By multiplying Cv by the Sv shown for valve pressures.

When steam required is known:

$$\frac{Q}{Sv} = Cv$$

OBTAIN VALVE Cv REQUIRED

By dividing pounds/hour required by the Sv listed at valve pressures.

*Back PSI at valve outlet is the pressure produced by the resistance to flow downstream in the line.

Flow does not increase at outlet pressures lower than lowest shown.

FOR SUPERHEATED STEAM CORRECT FACTOR AS FOLLOWS:

With 50°F. Superheat multiply by .96
With 100°F. Superheat multiply by .94
With 150°F. Superheat multiply by .90
With 200°F. Superheat multiply by .87
With 300°F. Superheat multiply by .80

FOR AIR CAPACITIES: Divide factor for the desired pressure reduction by 2.8 to obtain CUBIC FEET OF FREE AIR PER MINUTE at 60°F.

FOR GAS CAPACITIES: Divide factor for the desired pressure reduction by 2.8 times the square root of the specific gravity of the gas to obtain CUBIC FEET OF FREE GAS PER MINUTE at 60°F.

EFFECTIVE:
MAY 16, 1990

H. O. TRERICE CO.
MFR. OF TEMPERATURE/PRESSURE INSTRUMENTS & CONTROLS SINCE 1923

12950 W. EIGHT MILE RD. OAK PARK, MI 48237 PHONE: (313) 399-8000

SELF-CONTAINED TEMPERATURE REGULATORS

PRICE LIST NO. 150-210 (Applies to Catalog No. 150)

Please review specifications set forth in Catalog No. 150 prior to placing order.

TERMS: 1% 10 Days, Net 30 Days, F.O.B. Factory • MINIMUM ORDER: $100.00 NET • Prices Subject to Change Without Notice

HOW TO ORDER:

6	91000	AGS	¾"	95 – 190	°F	CS	8	B01	W04
QUANTITY	ACTUATOR MODEL NO.	VALVE CODE NO.	VALVE SIZE	TEMPERATURE RANGE	UNIT MEASURE	TUBING MATERIAL CODE NO.	TUBING LENGTH (FEET)	BULB NUMBER	UNION OR THERMOWELL NUMBER

ACTUATOR MODELS:

91000 & 91400

PAGE NO.	MODEL NO. 91000 COMPACT ACTUATOR
7	No. 91000 Compact Actuator, non-indicating with 8 ft. std. copper capillary tubing & union conn. ..... $314.60 Copper bulb (B01-H01) or plain conn. copper bulb (B05)
	MODEL NO. 91400 COMPACT ACTUATOR
	No. 91400 Compact Actuator, indicating with 8 ft. std. copper capillary tubing & union conn. ..... $387.60 Copper bulb (B01-H01) or plain conn. copper bulb (B05)

NOTE: Add valve body to above acutator price. For special capillary materials & wells see page 6 of price sheet.

COMPACT ACTUATOR VALVE BODIES – TWO WAY TYPE

Pg. 7	BRONZE BODY · SINGLE SEAT · SS TRIM					
SIZE		VALVE CODE NUMBER				PRICE
		STEM MOVES IN				
PORT NOMINAL	NPT CONN.	TO CLOSE Temp. Rise Heating · D.A.		TO OPEN Temp. Rise Cooling · R.A.		
⅛"	½"	AAS	REF. A02	BAS	REF. A03	$265.15
3/16"		ABS	A05	BBS	A06	$265.15
¼"		ACS	A08	BCS	A09	$265.15
⅜"		ADS	A11	BDS	A12	$265.15
½"		AES	A14	BES	A15	$265.15
¾"		AGS	A19	BGS	A22	$289.85
1"		AIS	A26	BIS	A30	$360.65
1¼"		AKS	A36	BKS	A41	$447.15
1½"		AMS	A47	BMS	A52	$504.45
2"		AOS	A58	BOS	A63	$559.50

105-5A Valve Packing Kit ..... $12.50 By Pass Hole $48.70

Pg. 8	BRONZE & CAST IRON* · DOUBLE SEAT · SS TRIM				
SIZE NPT CONN.	VALVE CODE NUMBER				PRICE
	STEM MOVES IN				
	TO CLOSE Temp. Rise Heating · D.A.		TO OPEN Temp. Rise Cooling · R.A.		
¾"	AHS	REF. A21	BHS	REF. A24	$312.35
1"	AJS	A29	BJS	A33	$382.00
1¼"	ALS	A39	BLS	A44	$484.25
1½"	ANS	A50	BNS	A55	$522.45
2"	APS	A61	BPS	A66	$586.45
2½"*	CRS	B73	DRS	B74	$849.70
3"*	CTS	B78	DTS	B79	$992.75

†Denotes bronze trim option.
*Cast iron – flanged ends.

CONSUMER PRICE LIST NO. 150-210

COMPACT ACTUATOR VALVE BODIES — TWO WAY TYPE (Continued)

Pg. 10	CAST STEEL BODY · SINGLE SEAT · SS TRIM			
SIZE		VALVE CODE NUMBER		PRICE
		STEM MOVES IN		
PORT NOMINAL	NPT CONN.	TO CLOSE Temp. Rise Heating · D.A.	TO OPEN Temp. Rise Cooling · R.A.	
1/8"	3/4"	C01	—	$762.85
3/16"		C02	—	$762.85
1/4"		C03	—	$762.85
3/8"		C04	—	$762.85
1/2"		C05	C15	$762.85
3/4"		C06	C16	$762.85
1/8"	1"	C51	—	$831.40
3/16"		C52	—	$831.40
1/4"		C53	—	$831.40
3/8"		C54	—	$831.40
1/2"		C55	C65	$831.40
3/4"		C56	C66	$831.40
1"		C57	C67	$831.40

Pg. 9	STAINLESS STEEL BODY · SINGLE SEAT · SS TRIM		
SIZE NPT CONN.	VALVE CODE NUMBER		PRICE
	STEM MOVES IN		
	TO CLOSE Temp. Rise Heating · D.A.	TO OPEN Temp. Rise Cooling · R.A.	
1"	D26	D30	$1336.95
1 1/2"	D47	D52	$1640.30
2"	D58	D63	$1747.05

COMPACT ACTUATOR VALVE BODIES — THREE WAY TYPE

Pg. 8	BRONZE BODY — BRONZE TRIM		
SIZE NPT CONN.	VALVE CODE NO.		PRICE
1/2"	IFA	REF. A18	$265.15
3/4"	IHA	A25	$312.35
1"	IJA	A34	$382.00
1 1/4"	ILA	A45	$484.25
1 1/2"	INA	A56	$522.45
2"	IPA	A67	$586.45

Pg. 9	STAINLESS STEEL BODY — SS TRIM	
SIZE NPT CONN.	VALVE CODE NO.	PRICE
1"	D34	$2016.70
1 1/2"	D56	$2422.25
2"	D67	$2584.05

RANGES (COMPACT ACTUATORS):

Catalog Page No.	TEMPERATURE RANGES							
	COMPACT ACTUATORS 91000 & 91400	NOMINAL RANGES AVAILABLE		RECOMMENDED WORKING SPAN: HEATING (D.A.) & COOLING (R.A.) ALL SINGLE SEAT (HOT.) ALL THREE WAY VALVES		RECOMMENDED WORKING SPAN: COOLING (R.A.) WITH SINGLE SEAT ONLY		DUAL SCALE DIAL INDICATORS
		°F	°C	°F	°C	°F	°C	°F & °C
12	Thru 3" Valve Sizes. (3 Way Valves up thru 2" size)	*20 to 70	−10 to 20	40 to 65	5 to 20	N.A.	N.A.	30 to 115 & 0 to 45
		*40 to 90	5 to 30	65 to 85	20 to 30	N.A.	N.A.	50 to 140 & 10 to 60
		30 to 115	0 to 45	85 to 110	30 to 45	50 to 80	10 to 25	30 to 115 & 0 to 45
		50 to 140	10 to 60	110 to 135	45 to 60	80 to 105	25 to 45	50 to 140 & 10 to 60
		75 to 165	25 to 70	135 to 160	60 to 70	105 to 130	40 to 50	75 to 165 & 25 to 70
		95 to 190	35 to 85	160 to 185	70 to 85	130 to 155	50 to 65	95 to 190 & 35 to 85
		125 to 215	55 to 100	185 to 210	85 to 100	155 to 180	65 to 80	125 to 215 & 55 to 105
		140 to 240	60 to 115	210 to 235	100 to 115	180 to 205	80 to 95	140 to 240 & 60 to 115
		155 to 250	70 to 120	210 to 245	100 to 120	200 to 215	95 to 100	155 to 250 & 65 to 120
		200 to 280	95 to 135	245 to 275	120 to 135	215 to 245	100 to 120	200 to 280 & 95 to 135
		225 to 315	110 to 155	275 to 310	135 to 155	245 to 280	120 to 140	225 to 315 & 110 to 155
		255 to 370	125 to 185	305 to 365	155 to 185	275 to 335	135 to 165	255 to 370 & 125 to 185
		295 to 420	145 to 215	365 to 415	185 to 215	335 to 385	165 to 195	295 to 420 & 145 to 215
		310 to 440	155 to 225	415 to 435	215 to 225	385 to 405	195 to 205	310 to 440 & 155 to 225

*These ranges not recommended on single seat valves.

Select appropriate range from above table by locating recommended working span suitable for desired temperature, then: ORDER BY NORMAL RANGE associated with that working span.

91000L

PG. NO.	MODEL NO. 91000L LARGE ACTUATOR
11	No. 91000L large actuator, non-indicating with 8 ft. std. copper capillary tubing & union conn. ..... price $1235.85 Copper bulb (B01-H01) or plain conn. bulb (B05)

NOTE: Add valve body to above actuator price. For special capillary materials & wells see page 6 of price sheet.

LARGE ACTUATOR VALVE BODIES — TWO WAY TYPE

PG. 11	CAST IRON BODY — DOUBLE SEAT — SS TRIM				
SIZE NPT CONN.	VALVE CODE NUMBER STEM MOVES IN TO CLOSE Temp. Rise Heating · D.A.		TO OPEN Temp. Rise Cooling · R.A.		PRICE
4"	CVS	REF. B83	DVS	REF. B84	$1265.45
5"	CXS	B88	DXS	B89	$1527.80
6"	CZS	B93	DZS	B94	$1929.00

LARGE ACTUATOR VALVE BODIES — THREE WAY TYPE

Pg. 11	CAST IRON — BRONZE TRIM		
SIZE NPT CONN.	VALVE CODE NUMBER		PRICE
2½"	JRA	REF. B75	$1162.80
3"	JTA	B80	$1235.85
4"	JVA	B85	$1584.15

RANGES (LARGE ACTUATOR):

Catalog Page No.	TEMPERATURE RANGES							
		NOMINAL RANGES		RECOMMENDED WORKING SPAN				DIAL INDICATORS
				HEATING (D.A.)		COOLING (R.A.)		
		°F	°C	°F	°C	°F	°C	
12	LARGE ACTUATOR 91000L Over 3" Size (3 Way Valves over 2" size)	40 to 75	5 to 25	60 to 75	15 to 25	50 to 65	10 to 20	NOT AVAILABLE
		60 to 100	15 to 35	75 to 100	25 to 35	65 to 90	20 to 30	
		80 to 120	25 to 50	100 to 120	35 to 50	90 to 110	30 to 45	
		100 to 140	40 to 60	120 to 140	50 to 60	110 to 130	45 to 55	
		125 to 165	55 to 75	140 to 165	60 to 75	130 to 155	55 to 70	
		140 to 180	60 to 80	165 to 180	75 to 80	155 to 170	70 to 75	
		155 to 190	70 to 90	180 to 190	80 to 90	170 to 185	75 to 85	
		180 to 215	85 to 100	190 to 215	90 to 100	185 to 210	85 to 95	
		200 to 240	95 to 115	215 to 240	100 to 115	210 to 230	95 to 110	
		220 to 255	105 to 125	240 to 255	115 to 125	230 to 250	110 to 120	
		240 to 285	115 to 140	255 to 285	125 to 140	250 to 275	120 to 135	
		260 to 310	130 to 155	285 to 310	140 to 155	275 to 300	135 to 150	

Select appropriate range from above table by locating recommended working span suitable for desired control temperature, then: ORDER BY NOMINAL RANGE associated with that working span.

91000

PG. NO.	MODEL NO. 91600 SAFETY ACTUATOR
16	No. 91600 safety actuator, non-indicating with 8 ft. std. copper capillary tubing & union conn. ..... $781.10 Copper bulb (B01-H01) or plain conn. copper bulb (B05)

NOTE: Add valve body to above actuator price. For special capillary materials & wells, see page 6 of price sheet.

SAFETY ACTUATOR VALVE BODIES — TWO WAY TYPE

Pg. 17	BRONZE BODY — DOUBLE SEAT — SS TRIM					
SIZE		VALVE CODE NUMBER				PRICE
		STEM MOVES IN				
PORT NOMINAL	NPT CONN.	TO CLOSE Temp. Rise Heating · D.A.		TO OPRN Temp. Rise Cooling · R.A.		
1/8"	1/2"†	AAS	A02	BAS	A03	$265.15
3/16"		ABS	A05	BBS	A06	$265.15
1/4"		ACS	A08	BCS	A09	$265.15
3/8"		ADS	A11	BDS	A12	$265.15
1/2"†		AES	A14	BES	A15	$265.15
3/4"		AHS	A21	BHS	A24	$312.35
1"		AJS	A29	BJS	A33	$382.00
1 1/4"		ALS	A39	BLS	A44	$484.25
1 1/2"		ANS	A50	BNS	A55	$522.45
2"		APS	A61	BPS	A66	$586.45

†Denotes single seated.

Pg. 17	CAST STEEL BODY — SINGLE SEAT — SS TRIM			
SIZE		VALVE CODE NUMBER		PRICE
		STEM MOVES IN		
PORT NOMINAL	NPT CONN.	TO CLOSE Temp. Rise Heating · D.A.	TO OPEN Temp. Rise Cooling · R.A.	
1/8"	3/4"	C01	— —	$762.85
3/16"		C02	— —	$762.85
1/4"		C03	— —	$762.85
3/8"		C04	— —	$762.85
1/2"		C05	C15	$762.85
3/4"		C06	C16	$762.85
1/8"	1"	C51	— —	$831.40
3/16"		C52	— —	$831.40
1/4"		C53	— —	$831.40
3/8"		C54	— —	$831.40
1/2"		C55	C65	$831.40
3/4"		C56	C66	$831.40
1"		C57	C67	$831.40

RANGES (SAFETY ACTUATOR):

Catalog Page No.	TEMPERATURE RANGES	
	FAHRENHEIT	CELSIUS
16	35 to 60	0 to 15
	55 to 80	15 to 25
	65 to 90	20 to 30
	80 to 110	25 to 40
	90 to 115	30 to 45
	110 to 140	40 to 60
	125 to 155	55 to 65
	140 to 175	60 to 80
	170 to 195	80 to 90
	190 to 210	85 to 100
	205 to 225	95 to 105
	215 to 250	100 to 120
	230 to 265	110 to 130
	245 to 280	120 to 135
	270 to 300	135 to 150

91000XT & 91000XLT

Pg. No.	NO. 91000XT OR XLT TANK THERMOSTAT
19	No. 91000XT or XLT tank thermostat with ¾" valve body, non-indicating, 8 ft. standard copper capillary tubing and union connection, copper bulb (complete unit) $193.25

1" NPT valve size available on above models, add ..... $16.85 list extra.

	THERMOWELLS FOR TANK THERMOSTAT (CADMIUM PLATED STEEL)
19	No. 138-0156 1" NPT, 8½" insertion $22.45
	No. 138-0197A 1" NPT, 20" insertion $61.80

Catalog Page No.	TEMPERATURE RANGES							
	Nominal Range (°F)	Suggested Working range (°F)	Thermowell - 1" NPT Part No.	Bulb Length	Nominal Range (°F)	Suggested Working range (°F)	Thermowell - 1" NPT Part No.	Bulb Length
150-19	40 - 90	60 - 90	138-0156	10"	110 - 190	160 - 190	138-0156	8"
	45 - 115	85 - 115	138-0197A	20"	125 - 215	180 - 210	138-0156	8"
	65 - 140	110 - 140	138-0197A	20"	200 - 280	250 - 280	138-0156	8"
	85 - 115	85 - 115	138-0156	8"	225 - 315	280 - 310	138-0156	8"
	80 - 140	110 - 140	138-0156	8"	310 - 365	310 - 365	138-0156	8"
	110 - 140	110 - 140	138-0156	8"	295 - 420	360 - 420	138-0156	8"
	130 - 160	130 - 160	138-0156	8"				

Select appropriate range from above table by locating suggested working range suitable for desired control temperature, then: ORDER BY THE NOMINAL RANGE associated with that working range.

SPECIAL & EXTRA CONNECTING TUBING:

Catalog Page No.	TUBING MATERIAL CODE	MATERIAL	Price Per 4 ft. Increment*
150-12	CS	3/16" O.D. seamless copper tubing	$31.45
	SS	3/16" O.D. type 316 stainless steel tubing	$50.55
	TC	5/16" O.D. teflon covering over seamless copper tubing (max. temp. 400°F (204°C)	$50.55
	AB	5/16" O.D. brass spiral armor	$31.45
	AS	5/16" O.D. stainless steel spiral armor	$40.45

*Add the above price for each 4 ft. increment required to the next shorter standard length. For spiral armor over the required tubing, add the price listed for each 4 ft. increment over the entire capillary length.

TEMPERATURE REGULATOR BULB & THERMOWELL OPTIONS:

STANDARD SERIES 91000 TEMPERATURE REGULATOR BULBS

TYPE OF CONNECTION	BULB MATERIAL	TUBING MATERIAL	Tubing Length 8 Feet Bulb No.	Add To Actuator List Price	Tubing Length 12 Feet Bulb No.	Add To Actuator List Price	Tubing Length 16 Feet Bulb No.	Add To Actuator List Price	Tubing Length 20 Feet Bulb No.	Ac Act L P
PLAIN CONNECTION Without pipe thread	Copper Bulb	Copper	B05	No Extra	B15	$31.45	B25	$62.90	B35	$9
	*Teflon covered bulb & tubing	Teflon over copper	B08	$258.40	B18	$308.95	B28	$359.50	B38	$41
	Stainless type 316 bulb	316 St. steel	B06	$123.60	B16	$174.15	B26	$224.70	B36	$27
ADJUSTABLE CONN.	Copper bulb & brass fittings	Copper	B02	$50.55	B12	$82.00	B22	$113.45	B32	$14
	316 Stainless bulb & fittings	316 St. steel	B04	$188.75	B14	$239.30	B24	$289.85	B34	$34
UNION OR WELL CONNECTION	Copper bulb	Copper	B01	No Extra	B11	$31.40	B21	$62.90	B31	$9
		316 St. Stl.	B09	$38.20	B19	$88.75	B29	$139.30	B39	$18
Includes only coupling nut. Select appropriate union or well from chart below.	316 Stainless bulb	Copper	B03	$85.40	B13	$116.85	B23	$148.30	B33	$17
		316 St. Stl.	B10	$123.60	B20	$174.15	B30	$224.70	B40	$27

*Maximum temperature 400°F (204°C).

UNION AND THERMOWELL SELECTION CHART**

TYPE	MATERIAL	8 Feet Fitting No.	Price	12 Feet Fitting No.	Price	16 Feet Fitting No.	Price	20 Feet Fitting No.	Pri
UNION HUB BUSHING	Brass	H01	No Extra	H01	No Extra	H01	No Extra	H01	N Ext
	316 Stainless Steel	H04	$31.45	H04	$31.45	H04	$31.45	H04	$31
WELL	Brass	W01	$61.80	W11	$61.80	W21	$61.80	W31	$89
	Steel	W02	$92.15	W12	$92.15	W22	$92.15	W32	$120
	316 Stainless Steel	W04	$140.45	W14	$140.45	W24	$140.45	W34	$168

**For 91000L and 91600 actuators only – multiply above union and thermowell prices by x 2.
For values of Ⓐ, Ⓓ, Ⓚ & Ⓤ; see dimension table, catalog pgs. 150-14 or 150-16.

APPENDIX C
Calculations for Uninsulated Piping and Condensate Return Tanks

Pipe heat loss due to radiation and convection was calculated with the following heat transfer coefficient equations:

$$Hr = 0.172*E*((Ts/100)^4-(Ta/100)^4)/(Ts-Ta)$$

$$Hc = 1.016*(1/D)^{0.2}*(2/(Ts+Ta))^{0.181}*(Ts-Ta)^{0.266}$$

$$Q = (Hr + Hc)*(Ts - Ta)$$

where:

Hr = radiant heat transfer coefficient (BTU/hr ft2 °F)
Hc = convection heat transfer coefficient (BTU/hr ft2 °F)
E = emissivity of the surface (0.8 for rusty metal pipe)
Ts = temperature of the outside pipe wall (°Rankine)
Ta = temperature of the ambient surrounding air (°Rankine)
D = outside diameter of the pipe (inches)
Q = rate of heat transfer of the surface (BTU/hr ft2)

Conversion factor: Joules/hr m2 = 11357 * BTU/hr ft2
°R = (deg. C * 9/5) + 32 + 460
meter = 0.0254 * inches

The total pipe heat loss is then calculated with the measured surface area of the pipe or tank.

Heat loss(pipe) = Q * 3.14 * D * (pipe length) or:

Heat loss(tank) = Q * Length * Height

The total heat saved is calculated based on the effectiveness of 1.5 inches of insulation (0.7) and the estimated steam distribution efficiency (0.95).

Heat saved = Heat loss * 0.7 * 24 hr/day * 312 days/yr

Steam saved = (Heat saved / 0.95)

Steam saved (Kcs) = Steam saved * 235 Kcs/GJ

See attached sheets for specifications on installation and material.

TABLE C1
PIPING HEAT LOSSES ESTIMATE

PRODUCTION AREAS V-2a AND V-2b

LOCATION	SURFACE TEMP. DEGREE C	PIPE DIAMETER mMETERS	PIPE LENGHTH METERS	TRANS. COEFF. MJ/HR*M2	ENERGY LOSS MJ/HR	HEAT ENERGY LOSS GJ/YR	PIPE INSULAT ENERGY SAVINGS Kcs/YR
ROLI STREET, PLANT STEAM DISTRIBUTION CENTER;							
STEAM MANIFOLD AND PIPING ALONG THE BACK WALL							
PIPE	205	160	3	10.29	15.51	67.93	11762.
3 VALVES	205	230	1.5	10.06	10.9	47.74	8266.
2 VALVES	212	100	0.6	11.32	2.13	9.33	1615.
2 VALVES	112	100	0.6	3.33	0.63	2.76	477.
10 VALVES	100	160	4	2.78	5.59	24.48	4238.
PIPE	110	50	28	3.39	14.9	65.26	11300.
3 VALVES	110	160	1.2	3.39	2.04	8.94	154
5 VALVES	58	160	2	0.66	0.66	2.89	500.
CONDENSATE PIPING ALONG THE BACK WALL							
PIPE	98	30	7	3.02	1.99	8.72	1509.
V-2b AREA STEAM DISTIBUTION AND SPACE HEATING CENTER;							
STEAM MANIFOLD AND PIPING ALONG THE LEFT WALL							
PIPE	73	30	3	1.53	0.43	1.88	325.
4 VALVES	73	100	1.2	1.38	0.52	2.28	394.8
4 VALVE	82	160	1.6	1.75	1.41	6.18	1070.1
CONDENSATE PIPING ALONG THE BACK WALL							
PIPE	49	40	3	0.41	0.15	0.66	114.3
2 VALVES	49	160	0.8	0.37	0.15	0.66	114.3
HOT WATER MANIFOLD AND PIPING ALONG THE BACK AND RIGHT WALLS							
PIPE	46	100	2	0.28	0.18	0.79	136.8
PIPE	57	100	2	0.69	0.43	1.88	325.5
6 VALVES	46	230	3	0.26	0.56	2.45	424.2
6 VALVES	57	230	3	0.65	1.41	6.18	1070.1
5 VALVES	48	200	2.25	0.33	0.47	2.06	356.7
3 VALVES	39	160	1.2	0.05	0.03	0.13	22.5
TOTAL	NA	NA	70.95	NA	60.09	263.2	45575
AVERAGE	NA	96.4	NA	NA	NA	NA	NA

PAYBACK CALCULATION; INSULATION COST (Kcs) 70950
ESTIMATED SAVINGS (Kcs/yr) 45575

PAYBACK = 1.6

NOTES: BASED ON AN AVERAGE STEAM PRICE OF 235 Kcs/GJ (610.5 Kcs/TON)
"# VALVE(S)" DENOTES A QUANTITY OF UNINSULATED VALVES
"PIPE" DENOTES A QUANTITY OF UNINSULATED PIPE
INSULATION COST, NOMINAL 1000 Kcs/meter, INCLUDING MATERIAL AND LABOR

THE AUDIT WAS ABLE TO MEASURE THE UN-INSULATED

PIPING LOCATED IN AREAS V-2a AND V-2b AT AUTOBRZDY. THE ACTUAL PLANT TOTAL IS ESTIMATED TO BE SIX TIMES THAT SHOWN IN THE TABLE.
ACTUAL; INSULATION COST (Kcs) : 425700
ESTIMATED SAVINGS (Kcs/yr): 273450

TABLE C2
CONDENSATE RETURN TANK HEAT LOSSES ESTIMATE

AUTOBRZDY
CONDENSATE RETURN TANK LOSSES ESTIMATE
PRODUCTION AREAS V-2a AND V-2b

LOCATION	SURFACE TEMP. DEGREE C	TANK SURFACE AREA SQ.METER	TRANS. COEFF. MJ/HR*M2	ENERGY LOSS MJ/HR	HEAT ENERGY LOSS GJ/YR	PIPE INSULATION ENERGY SAVINGS Kcs/YR
V-2b AREA STEAM DISTIBUTION AND SPACE HEATING CENTER; TANK SURFACE	62	6.7	0.33	2.21	9.68	1676.2
ROLI STREET, PLANT STEAM DISTRIBUTION CENTER; TANK SURFACE	75	20	1.13	22.6	98.99	17140.9
TOTAL	NA	26.7	NA	24.81	108.67	18817.1

PAYBACK CALCULATION; INSULATION COST (Kcs) 32440.5
ESTIMATED SAVINGS (Kcs/yr) 18817.1

PAYBACK = 1.7

NOTES: BASED ON AN AVERAGE STEAM PRICE OF 235 Kcs/GJ (610.5 Kcs/TON)
INSULATION COST, NOMINAL 1215 Kcs/sq.meter, INCLUDING MATERIAL AND LABOR

THE AUDIT WAS ABLE TO MEASURE THE UN-INSULATED TANKS LOCATED IN AREAS V-2a AND V-2b AT AUTOBRZDY. THE ACTUAL PLANT TOTAL IS ESTIMATED TO BE THREE TIMES THAT SHOWN IN THE TABLE.
ACTUAL; INSULATION COST (Kcs) : 97321.5
ESTIMATED SAVINGS (Kcs/yr): 56451.3

Note: Values shown in *Tables C1 and C2* in the column labelled: "Pipe Insulation Energy Savings Kcs/yr" are found by multiplying the adjacent effectiveness of 0.7 and dividing by the steam distribution efficiency of 0.95 and then multiplying by the price of steam of 235 Kcs/GJ.

Recommended Insulation Thicknesses for MINERAL FIBER (Fiber Glass and Rock Wool)

NOMINAL PIPE SIZE (in inches)		PROCESS TEMPERATURE (°F) 150°	250°	350°	450°	550°	650°	750°	850°	950°	1050°
1/2	Thickness	1	1½	2	2½	3	3½	4	4	4½	5½
	Heat Loss	8	16	24	33	43	54	66	84	100	114
	Surf Temp.	72	75	76	78	79	81	82	86	87	87
	Savings	**$5**	**$15**	**$27**	**$42**	**$61**	**$82**	**$108**	**$146**	**$172**	**$213**
1	Thickness	1	1½	2	2½	3½	4	4	4½	5	5½
	Heat Loss	11	21	30	41	49	61	79	96	114	135
	Surf Temp.	73	76	78	80	79	81	84	86	88	89
	Savings	**$7**	**$22**	**$42**	**$64**	**$92**	**$125**	**$163**	**$208**	**$262**	**$325**
1½	Thickness	1	2	2½	3	4	4	4	5½	5½	6
	Heat Loss	14	22	33	45	54	73	94	103	128	152
	Surf Temp.	73	74	77	79	79	82	86	84	88	90
	Savings	**$11**	**$31**	**$58**	**$90**	**$128**	**$175**	**$229**	**$294**	**$370**	**$461**
2	Thickness	1½	2	3	3½	4	4	4	5½	6	6
	Heat Loss	13	25	24	47	61	81	105	114	137	168
	Surf Temp.	71	75	75	77	79	83	87	85	87	91
	Savings	**$13**	**$38**	**$71**	**$110**	**$157**	**$214**	**$282**	**$362**	**$457**	**$568**
3	Thickness	1½	2½	3½	4	4	4½	4½	6	6½	7
	Heat Loss	16	28	39	54	75	94	122	133	154	184
	Surf Temp.	72	74	75	77	81	83	87	86	87	90
	Savings	**$19**	**$55**	**$100**	**$156**	**$223**	**$303**	**$400**	**$516**	**$683**	**$851**
4	Thickness	1½	3	4	4	4	5	5½	6	7	7½
	Heat Loss	19	29	42	63	88	102	126	152	174	206
	Surf Temp.	72	73	74	78	82	86	85	87	88	90
	Savings	**$24**	**$68**	**$125**	**$195**	**$280**	**$381**	**$504**	**$650**	**$824**	**$1118**
6	Thickness	2	3	4	4	4½	5	5½	6½	7½	8
	Heat Loss	21	38	54	81	104	130	159	181	208	246
	Surf Temp.	71	74	75	79	82	84	87	88	89	91
	Savings	**$34**	**$96**	**$176**	**$275**	**$395**	**$542**	**$718**	**$929**	**$1179**	**$1475**
8	Thickness	2	3½	4	4	5	5	5½	7	8	8½
	Heat Loss	26	42	65	97	116	155	189	204	234	277
	Surf Temp.	71	73	76	80	81	86	89	88	89	92
	Savings	**$43**	**$121**	**$223**	**$348**	**$501**	**$688**	**$914**	**$1184**	**$1505**	**$1885**
10	Thickness	2	3½	4	4	5	5½	5½	7½	8½	9
	Heat Loss	32	50	77	115	136	170	220	226	259	307
	Surf Temp.	72	74	77	81	82	85	90	87	89	91
	Savings	**$52**	**$148**	**$271**	**$424**	**$612**	**$841**	**$1117**	**$1449**	**$1844**	**$2311**

- Heat Loss = BTU Per Ft./Per Hr.
- Based on 65°F. Ambient Temperature
- Fuel Cost: $6 Per Million BTU
- Savings = $/Per Ft./Per Yr.

Users are advised to consult manufacturer's literature for specific product temperature limitations.

Mineral Fiber Thicknesses continue on next page ▶

PLATE NO. 11

FITTINGS, ETC.

Mitered Insulation Elbow Oversized Application

Mitered insulation elbows may be fabricated in the field or pre-fabricated using an adhesive to seal the miters together to form two halves of the elbow. Any of the pipe covering materials may be used to fabricate miters including flexible elastomeric insulation. The term "oversized" indicates any application that must be made large enough to compensate for protrusions at the connection between the pipe and fitting. Applications shown are appropriate for hot and moderate installations.

(A) Finishing or insulating cement covered with fabric.

(B) Pre-formed metal elbow cover, secured with screws — hot application.

Materials: Mitered segments of pipe covering, wires, bands or adhesives, insulating cement, canvas, pre-molded metal elbow cover, sheet metal screws.

1. Pipe.
2. Pipe insulation (shown in (A) with factory applied non-metal jacketing, (B) metal jacketing.) Jacketing extends under the fitting insulation and finish.
3. Mitered segments of pipe covering cut to form a tight fit. (Adhesive between miters on pre-fabricated applications or when required).
4. Glass fiber fill insulation (Optional — used as a means of support when the mitered elbow has not been pre-fabricated into two self-supporting halves.)
5. Wire or banding (unnecessary when pre-fabricated).
6. Pre-formed metal elbow cover secured with sheet metal screws.
7. Finishing cement applied to smooth surface.
8. Fabric applied with adhesive on the surface of finishing or insulating cement.

5/79

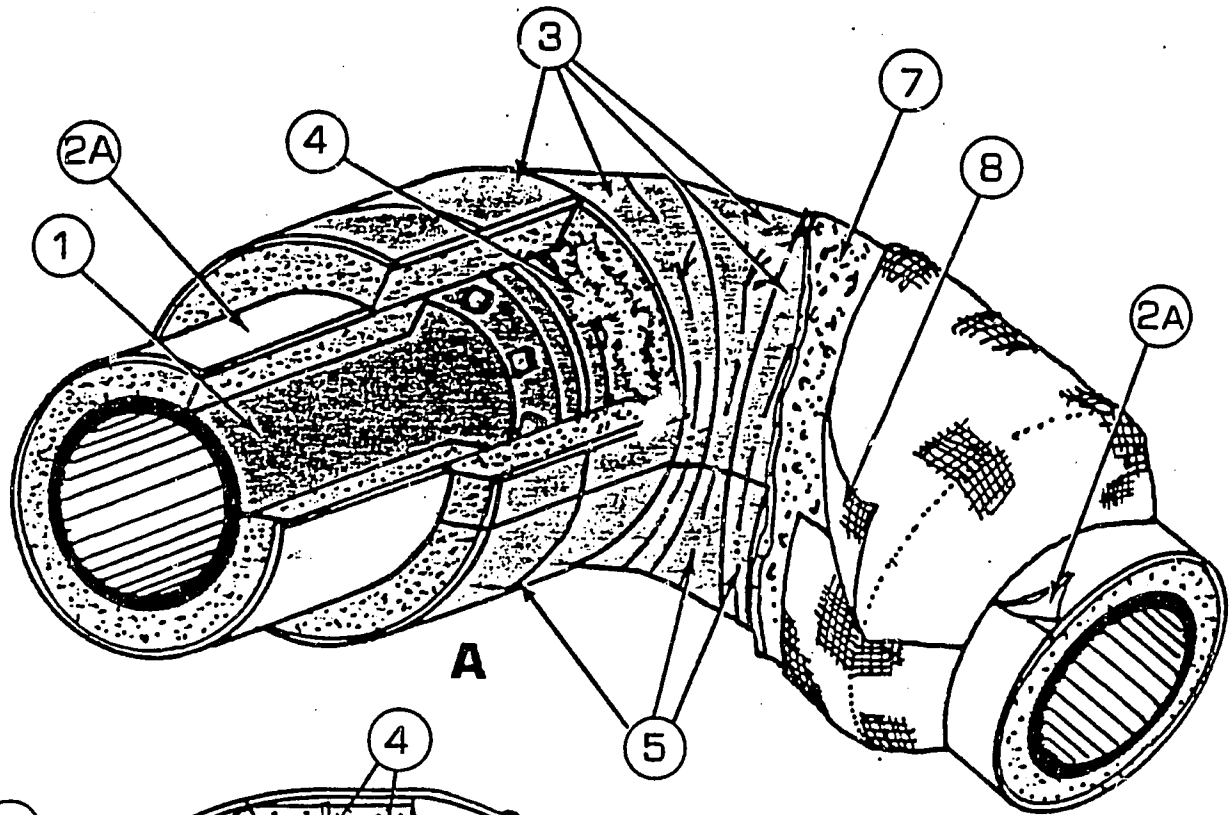

FLANGED ELBOW

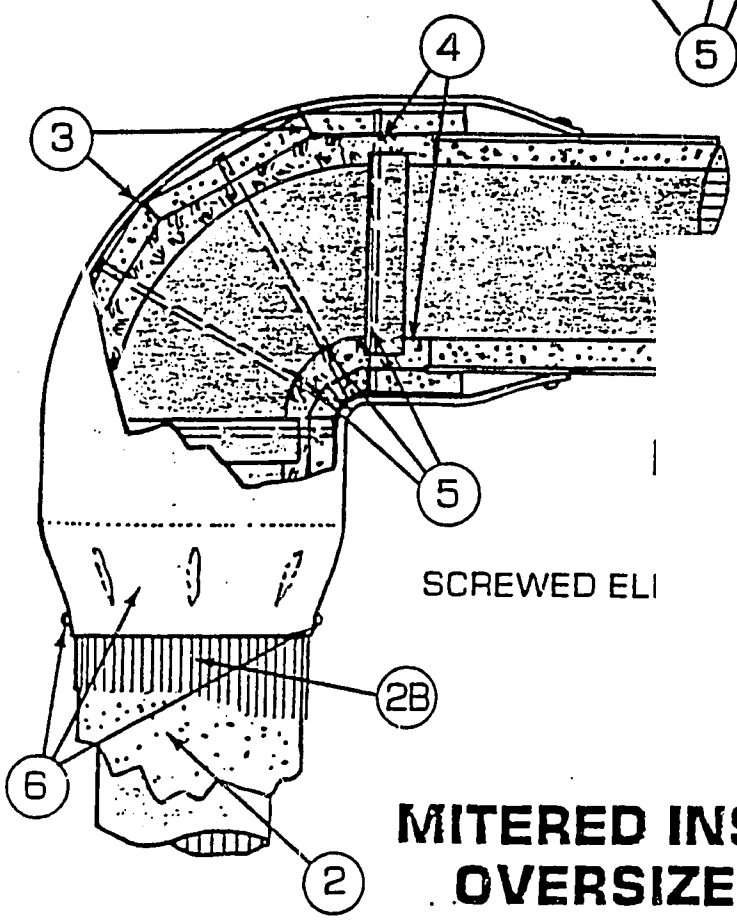

SCREWED ELI

MITERED INSULATION ELBOW OVERSIZED APPLICATION

FITTINGS, ETC.

mica INSULATION STANDARDS
5/79

PLATE NO. 11

PLATE NO. 14

FITTINGS, ETC.
Field or Factory-fabricated Valve/Tee Insulation

The term "fabricated" applies to the construction of a custom sized and shaped insulation installation for fittings, etc., using common forms of insulation such as rigid blocks and pre-formed pipe covering segments. The fabrication may take place in the field, a fabrication shop, or the fitting insulation may be pre-fabricated by a manufacturer. Fitting covers may be similarly fabricated from jacketing materials, or purchased pre-fabricated from the manufacturer. Other finishes include the use of mastics, cements and reinforcing fabrics, or the use of pipe covering segments with factory-applied jacketing, sealed at the joints and bonnet area.

(A) Built-up Application

(B) Oversized Application

(C) Fabrication Components

Materials: Rigid pipe covering, block insulation, glass fiber or other fill insulation, adhesive, pre-fabricated metal valve cover and caulking.

1. Pipe.
2. Pipe insulation (shown with field-applied metal jacketing).
3. Collar of rigid pipe covering sized to clear the flanges.
4. Sleeve of oversized pipe covering sized to cover the body of the valve and overlap onto the flange collar (Insulation thickness is the same as that used on the adjacent piping.)
5. Sleeve of oversized pipe covering sized to cover the bonnet flange and fit snugly into the "V" cut out of the body sleeve.
6. Bonnet collar of rigid block insulation with cut-out for valve stem.
7. Adhesive at joints.
8. Glass fiber or other fill insulation (optional).
9. Caulking around valve stem cut-out (optional-used on cold or outdoors applications).
10. Pre-fabricated metal valve cover.

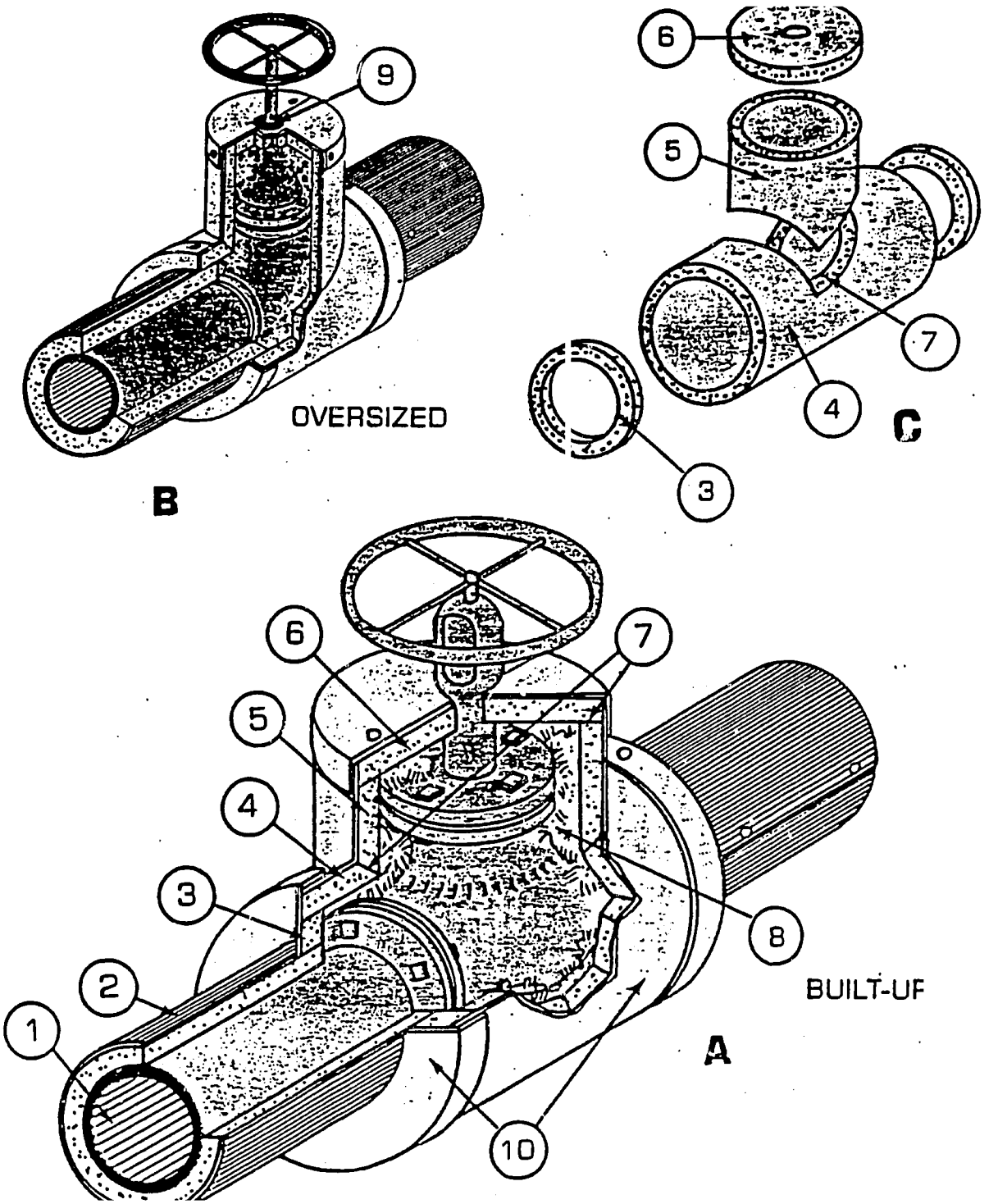

FIELD OR FACTORY-FABRICATED VALVE/TEE INSULATION

PLATE NO. 16

FITTINGS, ETC.
Cement Valve Insulation

Cement is useful in areas where clearances are minimal, surfaces are irregular and where maintenance or replacement is unlikely. On most valves, only the body of the valve is covered with the cement tapered off below the valve bonnet and extended out over the pipe covering. The cement application may or may not require reinforcement mesh or fabric depending on valve size, the thickness of the cement and other considerations.

The application illustrated on **Plate No. 16** shows a fabric finish and is appropriate on moderate and hot applications.

Materials: Mineral fiber and/or one-coat cement, reinforcing wire mesh or glass fabric, fabric covering, adhesive and/or cement.

1. Pipe.
2. Pipe insulation (shown with a factory applied jacket).
3. Layers of insulating cement.
4. Layer of reinforcing wire mesh or glass fabric embedded in the cement.
5. Finishing fabric adhered to the smooth cement surface with adhesive or mastic.

5/79

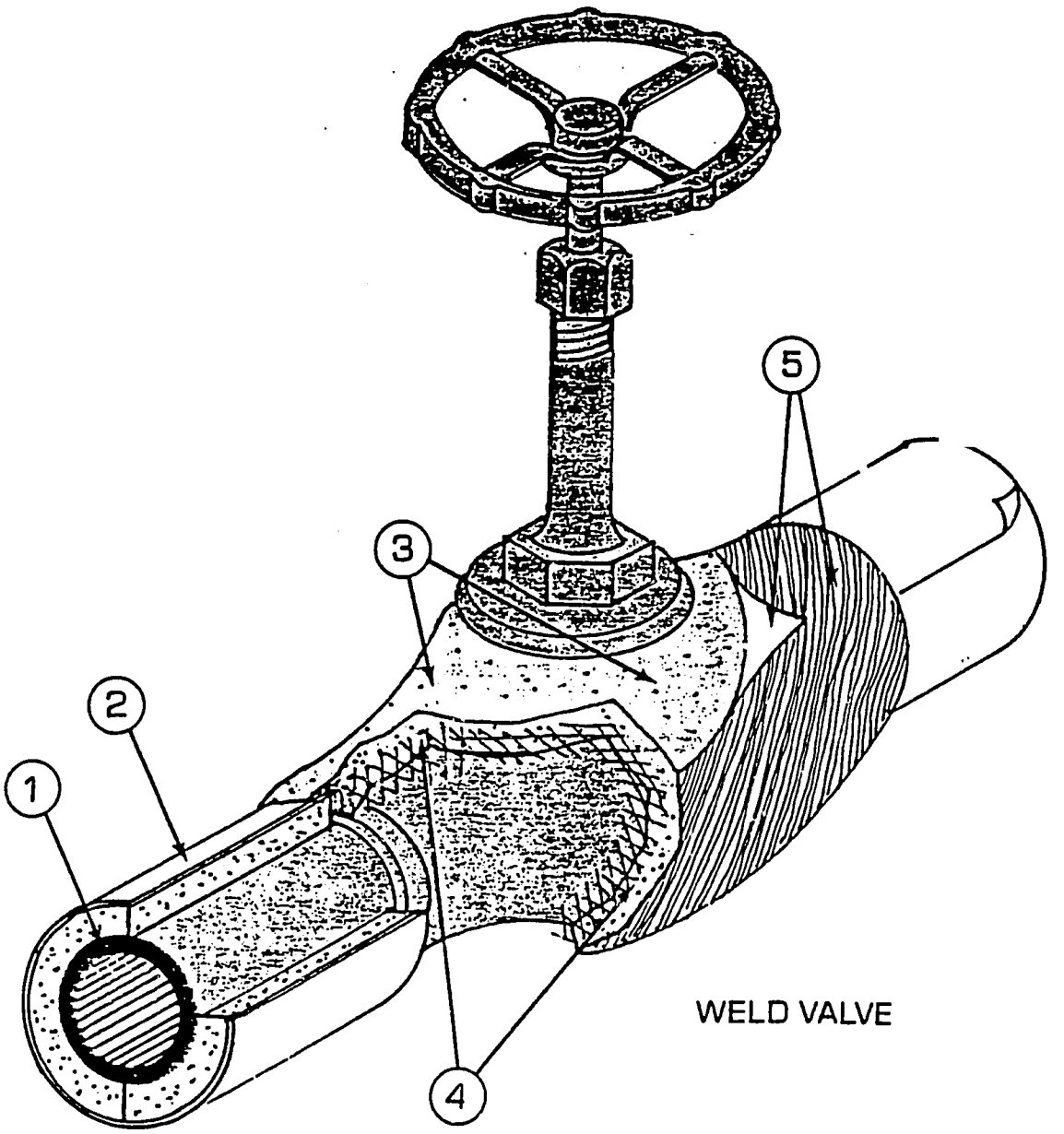

CEMENT VALVE INSULATION

PLATE NO. 30

VESSELS, TANKS AND EQUIPMENT

Small Diameter Vessels/Exhaust Pipe Covering

Hot vessels, tanks, exchangers, round breechings and exhaust ducts having outside diameters of less than 30" can be insulated with large radius pipe covering materials. High rib metal lath may be applied on installations over 600°F as shown on **Plate No. 22**. Alternate methods are the application of rigid blocks or mitered segments as illustrated on **Plate No. 23**.

(A) Vertical application on vessel

(B) Horizontal application on tube exchanger

Materials: Rigid pipe covering segments, discs of rigid block, fill insulation (either pieces of block insulation of glass fiber), sheet metal jacketing, sheet metal screws or pop rivets and stainless steel bands.

1. Vessel wall.
2. Insulation support ring.
3. Pipe covering segments secured with wire or bands.
4. Disk of rigid insulation cut to fit over head and inside pipe covering.
5. Loose fill insulation used as support for top disk.
6. Sheet metal jacketing.
7. Sheet metal screws or pop rivets as required.
8. Stainless steel bands as required.
9. Nozzle. (**See Plate No. 33**.)
10. Insulation cut or beveled away from flanges for bolt removal. Finish as required for temperature and exposure.

5/79

58

SMALL DIAMETER VESSELS/EXHAUST PIPE COVERING

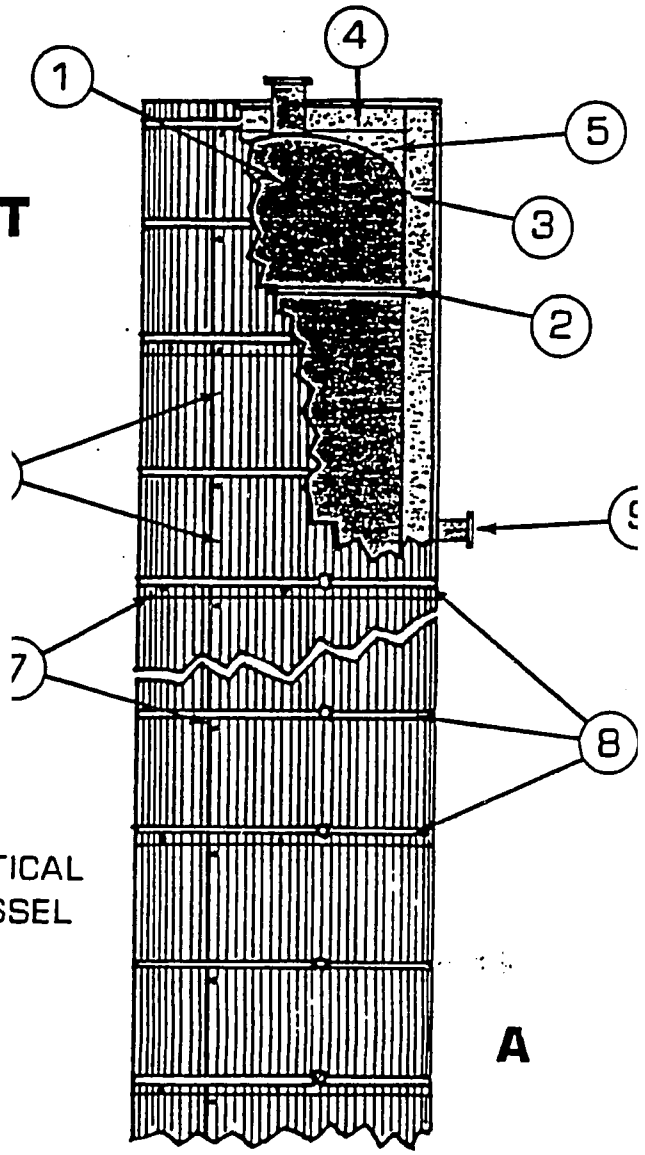

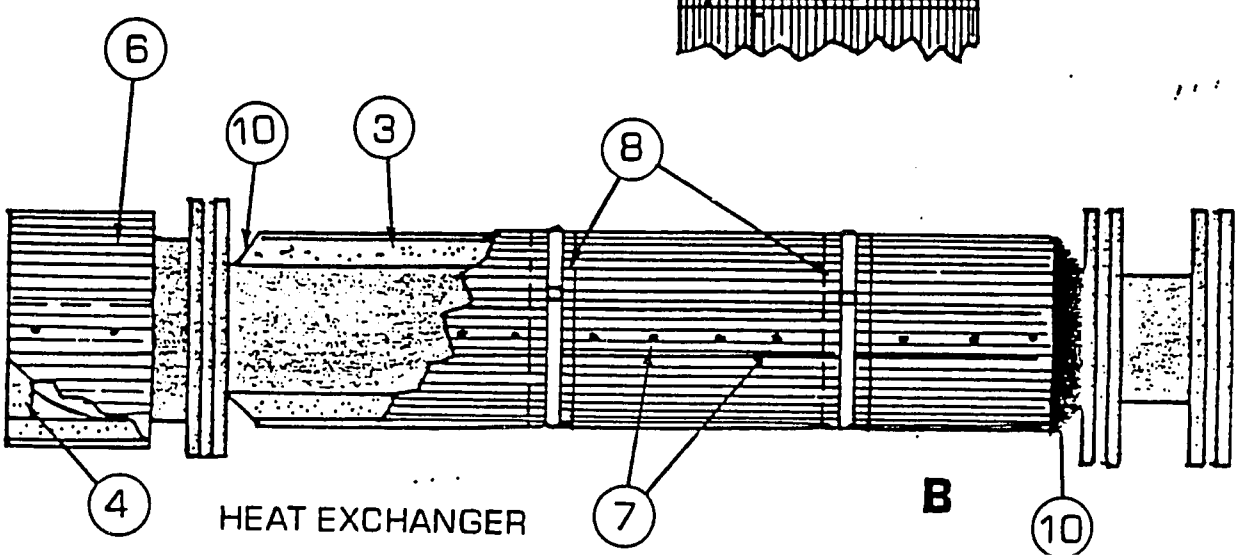

VESSELS, TANKS AND EQUIPMENT

mica INSULATION STANDARDS
5/79

PLATE NO. 30

PLATE NO. 47

REMOVABLE & REUSABLE INSULATION

Formed & Shaped Insulation Covers

Formed and shaped insulation covers are used on equipment and fittings such as valves, flanges, ells, strainers, etc., requiring removable and reusable insulation. The covers are made to conform to the shape of the surface with the curvature and contour pieces neatly mitered and sewed. The covers should have the same appearance as permanent insulation, and overlap and fit to the adjacent insulation. Covers can be produced in single layer for thicknesses up to 4", and in multiple layers for thicknesses over 4".

Materials: Mesh or fabric covered insulation, quilting washers, hooks, lacing wire and staples.

1. Valve.
2. Removable cover.
3. Machine stitching.
4. Metal stitching at edges.
5. Quilting washer.
6. Lacing hooks and wire.
7. Adjacent insulation.

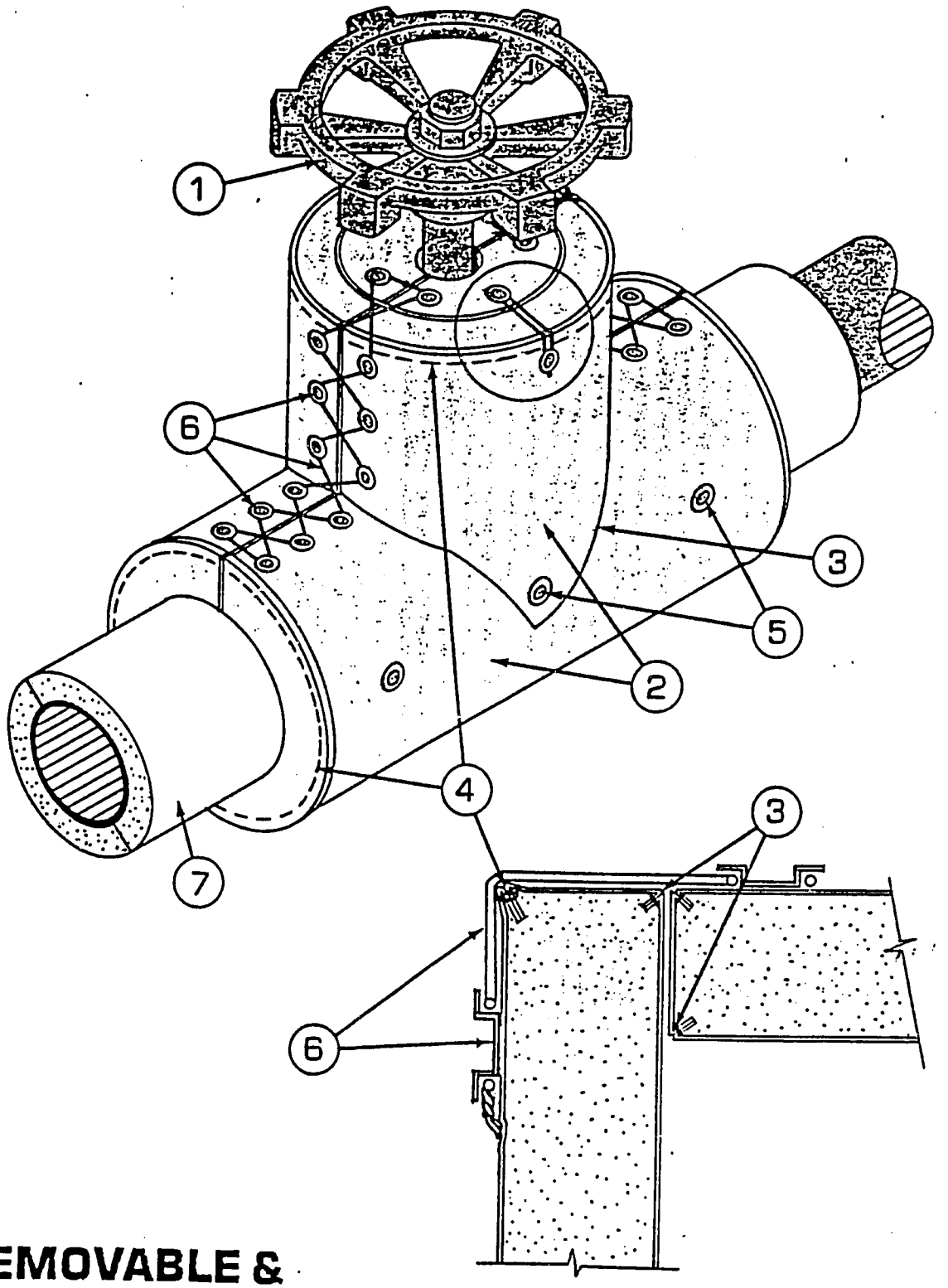

REMOVABLE & REUSABLE INSULATION

FORMED & SHAPED INSULATION COVERS

mica INSULATION STANDARDS
3/83

PLATE NO. 47

SUBMITTAL SHEET

OWENS/CORNING FIBERGLAS

Fiberglas® Heavy Density Pipe Insulation

- ☐ ASJ/SSL-II® All Service Jacket, Self Sealing Lap
- ☐ ASJ All Service Jacket
- ☐ No-Wrap for Field Jacketing Applications

Uses

Owens-Corning Fiberglas pipe insulations are recommended for use on all hot, cold, concealed and exposed piping operating from 0 F to +850F in commercial, institutional and industrial buildings, process facilities and power plants.

Fiberglas ASJ/SSL-II pipe insulation provides a positive vapor seal over the insulation for condensation control without the use of staples, adhesives or bands.

Fiberglas ASJ pipe insulation is suitable for installations where the appearance and protection of an all service jacket is required and a vapor seal is not essential.

Fiberglas® No-Wrap pipe insulation is appropriate for power, process, marine and industrial applications where a jacket is field-applied for weather protection or abuse resistance.

Description

Owens-Corning Fiberglas pipe insulations are molded of heavy density resin-bonded inorganic glass fibers. These one-piece, three-foot long sections are opened, placed over the pipe, closed, and secured by means specific to the type as described below.

Fiberglas ASJ/SSL-II pipe insulation is wrapped with a kraft reinforced foil vapor retarder jacket with two factory-applied pressure sensitive adhesives which provide positive closure and vapor sealing of the longitudinal joint, even at ambient temperatures as low as 25F. This sealing system completely eliminates the need for staples, adhesives or bands. Self-sealing butt strips are provided in the carton with the insulation for sealing circumferential joints.

Fiberglas ASJ pipe insulation is wrapped with the same all-service jacket as ASJ/SSL-II pipe insulation, but does not have a longitudinal lap seal. The longitudinal lap is closed at the job-site by stapling. Vapor barrier mastic must be used in addition if

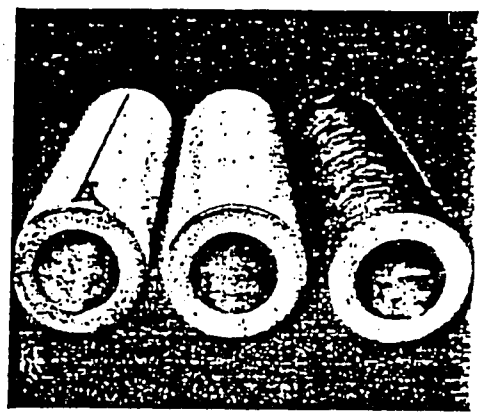

a vapor seal is required. The use of Fiberglas ASJ pipe insulation where a vapor seal is needed requires more field labor, and therefore a higher installed cost, than if Fiberglas ASJ/SSL-II pipe insulation were to be used.

Fiberglas No-Wrap pipe insulation is supplied in one-piece sections without jacketing, and ready for field installation of covering appropriate to the vapor control, damage or corrosion resistance requirements of the application.

Physical Properties*

	ASJ/ SSL-II	ASJ	No-Wrap
Pipe operating temperature range	0 to +850 F	0 to +850 F	0 to +850 F
Jacket temperature limitation	-20 F to +150 F	-20 F to +150 F	N/A
Jacket permeance, perm (ASTM E 96)	0.02	0.02	N/A
Jacket puncture resistance, units (ASTM D 781)	50	50	N/A
Composite surface burning characteristics:	UL 723	UL 723	ASTM E 84
Flame Spread**	25**	25**	25**
Smoke developed	50	50	50

*All properties subject to normal manufacturing tolerances.

**The surface burning characteristics of these products have been determined in accordance with ASTM E 84 or UL 723 as noted above. These standards should be used to measure and describe the properties of materials, products or assemblies in response to heat and flame under controlled laboratory conditions and should not be used to describe or appraise the fire hazard or fire risk of materials, products or assemblies under actual fire conditions. However, results of these tests may be used as elements of a fire risk assessment which takes into account all of the factors which are pertinent to an assessment of the fire hazard of a particular end use. Values are reported to the nearest five rating.

Thermal conductivity (ASTM C 335)

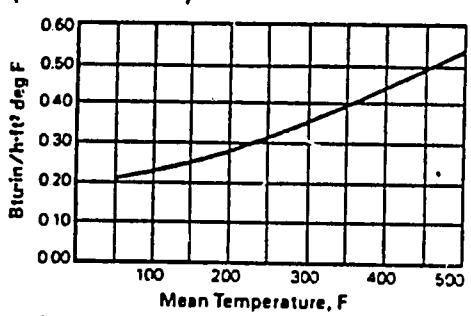

Thermal conductivity values are nominal, subject to normal testing and manufacturing tolerances.

SH-1

62

Product Availability
Fiberglas pipe insulations are available in thicknesses and for pipe sizes as shown below.

Within the ranges as shown, Fiberglas pipe insulations are also available in all copper tube sizes (CTS) from ⅝" to 6⅛".

Insulation thickness	NOMINAL PIPE SIZES (NPS) ASJ/SSL-II insulation	ASJ pipe insulation	No-Wrap pipe insulation
0.5"	0.5"- 6.0"	0.5"- 6.0"	0.5"- 6.0"
1.0"	0.5"-15.0"	0.5"-33.0"	0.5"-33.0"
1.5"	0.5"-14.0"	0.5"-33.0"	0.5"-33.0"
2.0"	0.5"-12.0"	0.5"-33.0"	0.5"-33.0"
2.5"	2.0"-11.0"	2.0"-26.0"	2.0"-32.0"
3.0"	3.0"-10.0"	3.0"-21.0"	3.0"-36.0"
3.5"	4.5"- 9.0"	4.5"-17.0"	4.5"-30.0"
4.0"	4.5"- 8.0"	4.5"-14.0"	4.5"-29.0"
4.5"	6.0"- 7.0"	6.0"- 9.0"	6.0"-28.0"
5.0"	6.0"	6.0"- 8.0"	6.0"-27.0"
5.5"		6.0"	6.0"-26.0"
6.0"			6.0"-25.0"

ASHRAE 90A-1980 Insulation Thickness Guide Specification

Table 5.1 Minimum pipe insulation*

Piping System Types	Fluid Temperature Range °C	°F	Runouts 2" max. 12' lgth in.	1" & less in.	1¼" to 2" in.	2½" to 4" in.	5" and over in.
	Insulation thickness for pipe sizes						
Heating systems Steam & Hot Water							
High pressure/ temperature	158-238	306-450	1.5	2.5	2.5	3.0	3.5
Medium pressure/ temperature	122-151	251-305	1.5	2.0	2.5	2.5	3.0
Low pressure/ temperature	94-121	201-250	1.0	1.5	1.5	2.0	2.0
Low temperature	43-93	120-200	0.5	1.0	1.0	1.5	1.5
Steam condensate for feed water	any	any	1.0	1.0	1.5	2.0	2.0
Cooling systems							
Chilled water, refrigerant	4.5-13	40-50	0.5	0.5	0.75	1.0	1.0
or brine	below 4.5	below 40	1.0	1.0	1.5	1.5	1.5

*Thicknesses shown are for conditioned spaces; for piping exposed to outdoor temperatures, increase thickness by 0.5".

Thickness recommendations to prevent surface condensation

Design Conditions	Pipe Sizes	Fluid temperature 50F	35F	0F
80F at 50% RH	⅝" OD thru 6" NPS	½"	½"	½"
80F at 50% RH	7" OD thru 12" NPS	1"	1"	1"
85F at 70% RH	⅝" OD thru 6" NPS	½"	½"	½"
85F at 70% RH	7" OD thru 12" NPS	1"	1"	1"
90F at 80% RH	⅝" OD thru 1" NPS	½"	1"	1"
90F at 80% RH	1⅛" OD thru 12" NPS	1"	1"	1½"

Derived from ASTM C 680 "Recommended Practice for determination of Heat Loss or Gain". Emittance: 0.9. Wind velocity: 0 mph.

Specification Compliance
Fiberglas pipe insulations comply with the property requirements of the following specifications:

	ASJ/ SSL-II*	ASJ	No-Wrap
HH-B-100B, Type I and II: Barrier Material, Vapor	•	•	
HH-I-558B (Amend.3), Form D, Type III, Class 12 and 13: Insulation (Pipe and Tube Covering) and Pipe Fitting Covering	•	•	•
MIL-I-24344C (Ships)*: Insulation, Pipe Covering, Thermal	•	•	•
MIL-I-24244B (Ships): Insulation Material	•	•	•
U.S. Coast Guard 164.009: Non-Combustible Materials			•
Nuclear Regulatory Commission Guide 1.36: Non-Metallic Thermal Insulation (1)	•	•	•
ASTM C 547, Class 1 and 2: Mineral Fiber Pipe Insulation.	•	•	•
ASTM C 795: Thermal Insulation for Use over Stainless Steel. (1)	•	•	•
New York City MEA No. 344-83	•	•	•

*Requires waiver of alkalinity and pH requirements. (1) Lot testing may be required.

Caution: It is possible that heat may be generated from the resinous binder in insulations if ignited by external sources such as welding slag, cutting torches, etc care should be taken to avoid direct contact with the insulation by fire or ignition sources.

Organic binders used in the manufacture of fibrous glass pipe insulation decompose to some extent at operating temperatures above 350F. Thermal performance of the insulation is not affected by the loss of binder, but compressive strength and resiliency are altered. An acrid odor and smoke will emit from the insulation on piping start-up. Provide adequate ventilation to prevent buildup of gases. Pipe supports at hangers should be from the pipe itself or from high-compressive inserts such as Kaylo® asbestos-free pipe insulation. Minimum insulation thickness should be sufficient to provide personnel protection. Maximum insulation thickness should not exceed six (6) inches. If piping will be subjected to excessive vibration, consult your Owens-Corning Fiberglas representative for recommendations. For piping operating above 650F, insulation should be applied in a single layer.

The recommended insulation thicknesses shown in the ASHRAE 90A-1980 table at left are based on economic considerations only and do not attempt to prevent surface condensation. The table below left shows recommended insulation thicknesses to prevent surface condensation for frequently encountered design conditions.

OWENS-CORNING FIBERGLAS CORP
Mechanical Insulation Products
Fiberglas Tower, Toledo, Ohio 43659

Pub. 5-IN-14726-C Litho in USA November 1988

Copyright © 1988 Owens-Corning Fiberglas Corp.

APPENDIX D
Heat Recovery from the Air Compressors

The compressed air for the plant is furnished by four units, 3 at 132 kW and 1 at 75 kW. The compressors and the compressed air are cooled with a cooling tower. All of the heat is rejected to the outside. This is heat could be used in winter to heat the compressor building SO-114.

Measurements of the cooling water flow were made with the ultrasonic flow meter. The flow measured was 270 LPM(71.3 gpm) at a temperature difference of 3.6 °F. The heat rejected for these conditions is 128,340 Btu/hr. Only one of the compressors was running during the test and at 78 percent of full load. Normal operating conditions for the plant require 2 compressors to run. Under these conditions the heat rejected is 326,00 Btu/hr = 0.359 GJ/hr.

This heat can be used to heat the building and save
0.359 GJ/hr * 2000 hr/yr * 247.4 Kcs = 177,346 Kcs/yr.

Electric power to operate the unit heater fans will cost 2000 x 6 x 2000 hr x 3 kW x 0.69 kcs/kWh= 4140 Kcs/year. The amount saved is 177346-4140 = 173,206 Kcs/year.

Two additional unit heaters will need to be installed and piping to two existing heaters modified to allow the flow to the tower to be sent through the unit heaters in winter. This flow will be changed by the use of manual valves twice each year.

The cost of the unit heaters and piping is estimated to be 200,000 Kcs and the payback = 200,000/177,346 = 1.2 yrs

The heat saved annually is 0.359 x 2000 = 718 GJ/yr; this is 0.9 percent of the annual steam use.

The unit heaters should be equal to Modine horizontal flow with a rating of 163,000 Btu/hr at 60 °F entering air and 90 °F entering water temperature, maximum water pressure drop 4 psi at 30 gpm. The control of the unit heaters should be a control to cycle the fan motor(on/off); a simple line voltage thermostat connected to the motor starter. The motors should be 380 volt 3 phase.

Air Compressor Cooling Water System

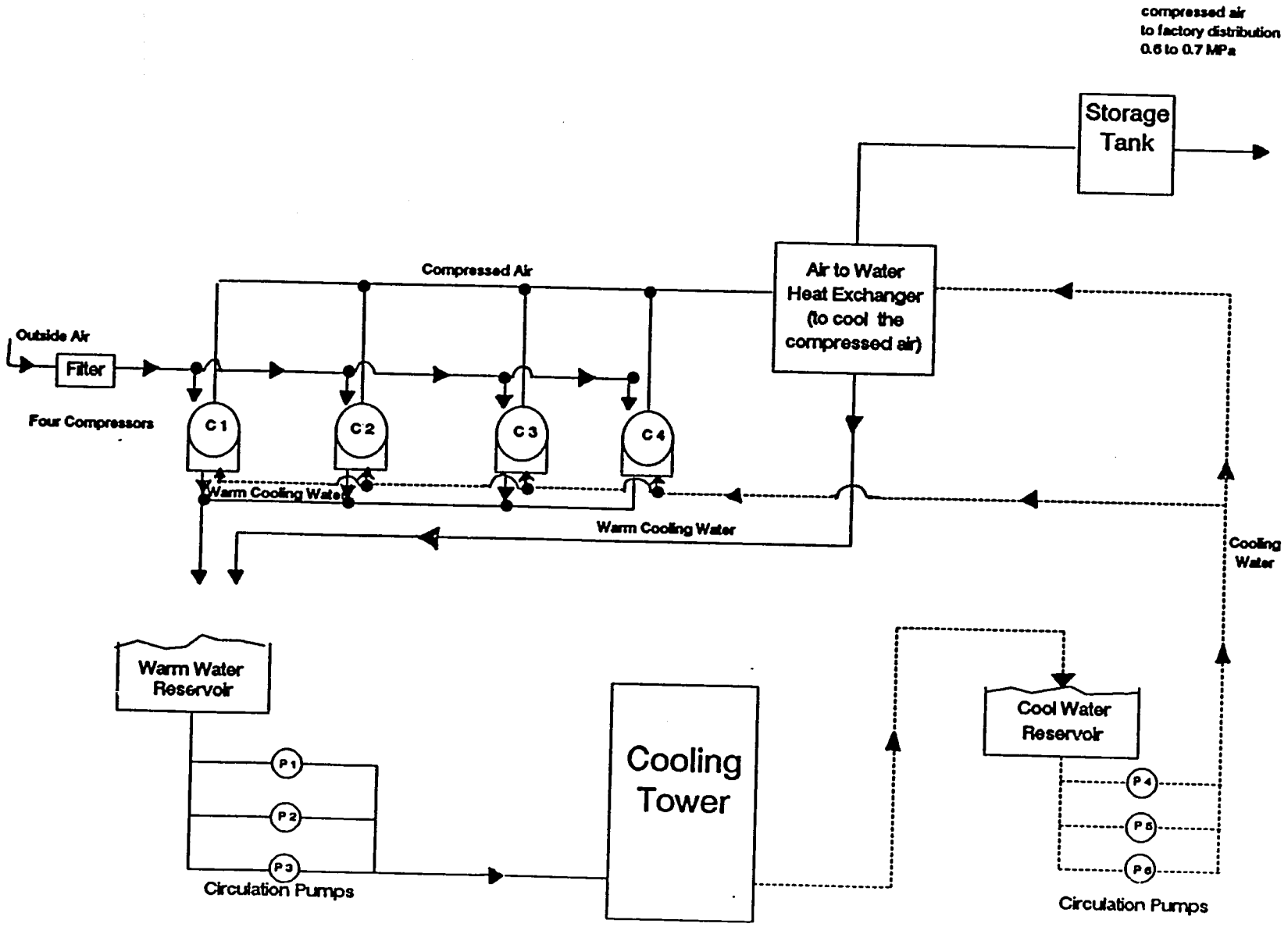

hot water unit heater selection data — continued

table 11 — hot water heating capacity conversion factors

To determine the heating capacity Btu/hr) of a unit heater at any entering water temperature and entering air temperature multiply the capacity at 200°F E.W.T. and 60°F E.A.T. by the factor from this table. Note: GPM must be identical to that at 200°F E.W.T. and 60°F E.A.T.

Conversion factors in table 11 may be used with standard hot water data on page 18 or 19, or with data obtained from the standard hot water performance curves.

	ENTERING AIR TEMPERATURES(°F)										
	0	10	20	30	40	50	60	70	80	90	100
	0.462	0.380	0.300	0.222	0.146	0.072	0	0	0	0	0
	0.539	0.456	0.375	0.296	0.219	0.145	.071	0	0	0	0
	0.615	0.531	0.450	0.370	0.293	0.217	0.143	0,071	0	0	0
	0.692	0.607	0.524	0.444	0.366	0.289	0.214	0.141	0.070	0	0
	0.769	0.683	0.599	0.518	0.439	0.361	0.286	0.212	0.140	0.069	0
	0.846	0.759	0.674	0.592	0.512	0.434	0.357	0.283	0.210	0.138	0.068
	0.923	0.835	0.749	0.666	0.585	0.506	0.429	0.353	0.279	0.207	0.137
	1.000	0.911	0.824	0.740	0.658	0.578	0.500	0.424	0.349	0.276	0.205
	1.077	0.987	0.899	0.814	0.731	0.651	0.571	0.494	0.419	0.345	0.273
	1.154	1.063	0.974	0.888	0.805	0.723	0.643	0.565	0.489	0.414	0.342
	1.231	1.139	1.049	0.962	0.878	0.795	0.714	0.636	0.559	0.483	0.410
	1.308	1.215	1.124	1.036	0.950	0.867	0.786	0.706	0.629	0.552	0.478
	1.385	1.291	1.199	1.110	1.024	0.940	0.857	0.777	0.699	0.621	0.547
	1.462	1.367	1.274	1.184	1.097	1.012	0.929	0.848	0.768	0.690	0.615
	1.539	1.443	1.349	1.258	1.170	1.084	1.000	0.918	0.838	0.759	0.684
	1.615	1.519	1.424	1.332	1.243	1.157	1.071	0.989	0.908	0.828	0.752
	1.692	1.594	1.499	1.406	1.312	1.229	1.143	1.060	0.978	0.897	0.820
	1.769	1.670	1.573	1.480	1.390	1.301	1.214	1.130	1.048	0.966	0.889
	1.846	1.746	1.649	1.554	1.463	1.373	1.286	1.201	1.118	1.035	0.957
	1.923	1.822	1.723	1.628	1.536	1.446	1.357	1.272	1.188	1.104	1.025
	2.000	1.898	1.798	1.702	1.609	1.518	1.429	1.342	1.257	1.173	1.094
	2.077	1.974	1.873	1.776	1.682	1.590	1.500	1.413	1.327	1.242	1.162
	2.154	2.050	1.948	1.850	1.755	1.663	1.571	1.483	1.397	1.311	1.230
	2.231	2.126	2.023	1.924	1.829	1.734	1.643	1.554	1.467	1.380	1.300
	2.308	2.202	2.098	1.998	1.902	1.807	1.714	1.625	1.537	1.449	1.367

table 11A — ethylene glycol correction factors

	AVERAGE SOLUTION TEMPERATURE (°F)			
	100	150	200	250
40	0.855	0.875	0.910	0.925
50	0.820	0.850	0.870	0.900
60	0.770	0.800	0.830	0.850
70	0.725	0.750	0.780	0.825
80	0.680	0.715	0.740	0.770
90	0.630	0.660	0.695	0.725
100	0.586	0.620	0.645	0.680

Table 11-A lists the correction factors for various percentages of ethylene glycol in water. Use the factors to correct the heating capacity of unit heaters when using an ethylene glycol solution. Follow the normal procedures in determining the heating capacity of a unit heater at any water temperature and entering air temperature, then apply the correction factor from table 11-A to determine the corrected heating capacity based on an ethlyene glycol solution.

table 12 — minimum water flow and water volume (gallons)

TYPE	MODEL	MIN. GPM	COIL VOLUME (GALS.)	TYPE	MODEL	MIN. GPM	COIL VOLUME (GALS.)	TYPE	MODEL	MIN. GPM	COIL VOLUME (GALS.)
HORIZONTAL DELIVERY		.15	.13	"POWER-THROW"		2.7	.97	VERTICAL DELIVERY		.30	.15
		.15	.13			2.7	1.24			.30	.15
		.15	.13			2.7	1.24			.45	.23
		.15	.13			3.6	1.66			.45	.23
		.20	.41			3.6	1.98			.60	.31
		.20	.41			3.6	1.98			.60	.31
		.20	.41							.75	.38
		.20	.41							.75	.38
		.20	.66							.60	.43
		.20	.66							.60	.43
		.20	.66							.75	.54
		.20	.66							.75	.54
		.20	.98							.90	.65
		.20	.98							.90	.65
		.20	.98							1.20	.86
		.20	.98							1.20	.86
		.20	1.35							1.20	.86
		.20	1.35							1.20	.86
		.40	1.45							1.35	.97
		.40	2.2							1.35	.97
		.40	2.2							1.35	1.24
		.40	2.2							1.35	1.24
		.40	2.2							1.35	1.24
		.40	2.5							1.35	1.24
		.40	2.5							1.8	1.66
										1.8	1.66
										3.6	1.98
										3.6	1.98
										3.6	3.72

hot water performance data

200°F ENTERING WATER
60°F ENTERING AIR
20°F WATER TEMPERATURE DROP

standard models at standard conditions

HIGH MOTOR SPEEDS

Type	Btu/hr.	GPM	Pressure Drop (Ft. of water)	Sound class	AIR DATA: *Max. Mounting Height (ft.)	*Heat Throw or Spread @ Max. Height	Lower Mounting Height (ft.)	Heat Throw @ Lower Mtg. Height	†Cfm.	Outlet Velocity (Fpm.)	Final Air Temp. (°F)	MOTOR DATA: ** Hp	Approx. Rpm.
HORIZONTAL DELIVERY	12,800	1.3	0.5	II	9	18	—	—	340	615	94	16MHP	1550
	15,700	1.6	0.8	II	10	19	—	—	370	675	98	1/25	1550
	24,500	2.5	0.2	II	11	23	—	—	630	675	95	1/25	1550
	29,000	2.9	0.3	III	13	30	8	36	730	785	96	1/12	1550
	47,000	4.7	0.8	II	15	31	8	42	1,120	680	98	1/12	1550
	63,000	6.3	1.4	III	16	33	10	46	1,340	820	102	1/8	1625
	81,000	8.1	3.2	III	18	33	10	46	2,010	775	96	1/8	1625
	90,000	9.0	4.0	III	17	27	10	41	1,775	700	106	1/6	1075
	133,000	13.5	7.9	IV	20	43	10	60	3,240	870	97	1/3	1075
	139,000	14.0	2.0	IV	19	41	10	57	2,900	790	103	1/3	1075
	198,000	20.0	5.0	V	20	47	12	65	4,560	740	99	1/2	1075
	214,000	22.0	5.8	V	22	50	12	65	4,590	750	104	1/2	1075
	273,000	27.0	11.0	V	22	50	12	60	5,130	720	108	1/2	1075
"POWER THROW"	180,000	18.5	0.3	V	17	108	—	—	5,460	2165	92	1/2	1075
	230,000	23.0	0.4	VI	18	117	—	—	5,980	2165	97	3/4	1140
	270,000	27.3	0.5	VI	18	124	—	—	7,900	1860	94	1	1140
	340,000	34.0	0.6	VI	19	138	—	—	10,390	2520	91	1 1/2	1140
	430,000	43.0	0.8	VI	22	151	—	—	11,750	2315	95	1 1/2	1140
VERTICAL DELIVERY	30,000	3.0	0.6	II	16	12	—	—	950	825	90	1/50	1050
	43,000	4.3	0.6	II	20	15	—	—	1,155	1005	96	1/50	1050
	57,000	5.7	0.6	II	22	16	—	—	1,590	1065	95	1/15	1050
	68,000	6.8	0.5	II	22	16	—	—	1,665	1120	100	1/15	1050
	105,000	10.5	2.4	III	26	19	—	—	2,660	1285	98	1/6	1075
	123,000	12.5	2.2	IV	29	22	—	—	3,200	1420	101	1/3	1075
	140,000	14.0	1.8	IV	32	24	—	—	3,500	1690	99	1/3	1075
	156,000	15.5	1.4	IV	32	24	—	—	3,610	1740	102	1/3	1075
	184,000	18.5	1.9	V	37	28	—	—	4,820	1910	97	1/2	1075
	210,000	21.0	2.0	V	40	32	—	—	5,460	2165	97	1/2	1075
	257,000	26.0	3.8	V	40	32	—	—	5,980	2165	102	3/4	1140
	300,000	30.0	2.8	VI	39	32	—	—	7,900	1860	98	1	1140
	383,000	38.0	4.2	VI	47	40	—	—	10,390	2520	96	1 1/2	1140
	430,000	43.0	0.8	VI	46	39	—	—	11,750	2315	95	1 1/2	1140
	680,000	68.0	17.5	VI	41	34	—	—	10,700	2110	125	1 1/2	1140

VG605-05
VG805-05

REDUCED MOTOR SPEEDS

requires solid state motor speed controller

Type	GPM	Pressure Drop (Ft. of water)	Sound class	AIR DATA: *Max. Mounting Height (ft.)▲	*Heat Throw or Spread (ft.)	†Cfm.	Outlet Velocity (Fpm.)	Final Air Temp. (°F)	MOTOR DATA: ** Hp	Approx. Rpm.
HORIZONTAL DELIVERY	1.3	0.5	II	9	11	220	400	100	16MHP	1000
	1.6	0.8	II	10	12	230	425	105	1/25	1000
	2.5	0.2	II	11	14	395	430	105	1/25	1000
	2.9	0.3	III	13	18	450	490	105	1/12	1000
	4.7	0.8	II	15	18	685	420	105	1/12	1000
	6.3	1.4	III	16	20	825	515	115	1/8	1000
	8.1	3.2	III	18	20	1,255	490	105	1/8	1000

*Horizontal units with horizontal louvers opened 30° from the vertical plane.
Vertical types equipped with cone jet deflector, blades in full open position.
**For most popular motor used on these models.
†Cfm for horizontal types is entering Cfm.
Cfm for vertical and "power-throw" types is leaving Cfm.
▲High motor speed.

68

dimensions and material specifications

VERTICAL DELIVERY

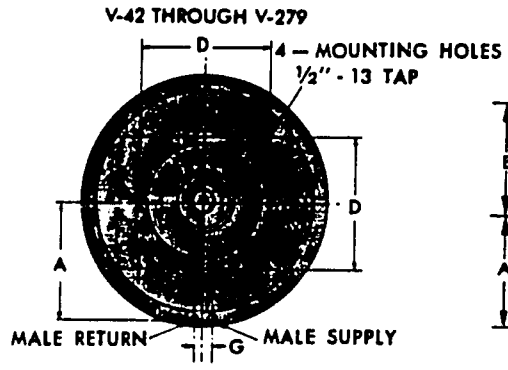

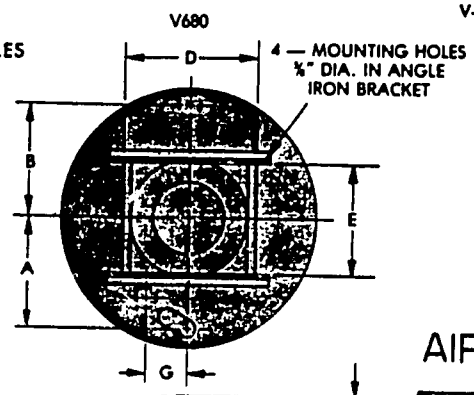

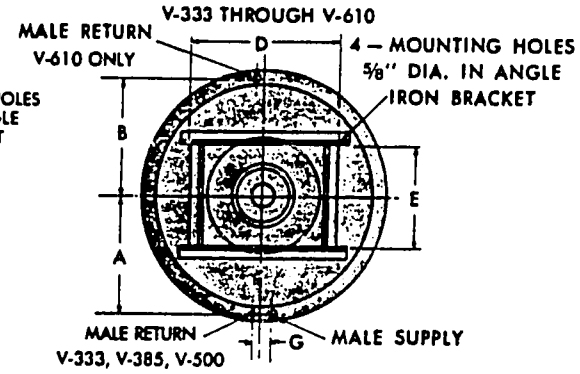

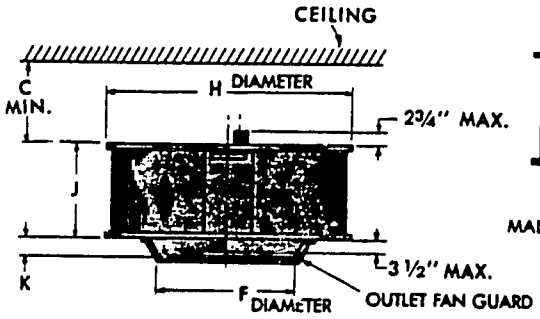

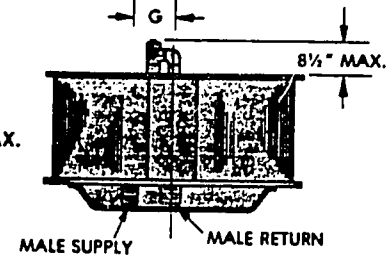

AIR DEFLECTORS (Optional)

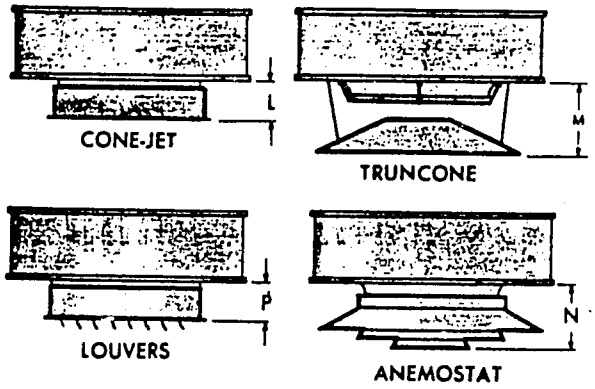

table 16 — dimensions

All dimensions in inches

Type	Model Numbers: Standard	Model Numbers: Low Outlet Temp.	A	B	C (Min.)	D	E	F	G	H	J	K	Nom. Fan Dia.	Male Conn. NPT: Top	Male Conn. NPT: Bottom	Approx. Shipping Weight, lbs.
VERTICAL DELIVERY	V-42	V-42L	11	—	8	11⅜	—	14½	2⅛	24¾	3⅝	4⅜	14	1¼	1¼	42
	V-59	V-59L	11	—	8	11⅜	—	14½	2⅛	24¾	5⅛	4⅜	14	1¼	1¼	48
	V-78	V-78L	11	—	8	11⅜	—	16½	2⅛	24¾	6⅝	2⅝	16	1¼	1¼	52
	V-95	V-95L	11	—	8	11⅜	—	16½	2⅛	24¾	8⅛	2⅝	16	1¼	1¼	55
	V-139	V-139L	16	—	8	18⅜	—	19½	2⅛	34¾	6⅞	3	19	1½	1	78
	V-161	V-161L	16	—	8	18⅜	—	19½	2⅛	34¾	8⅜	3	19	1½	1	91
	V-193	V-193L	16	—	8	18⅜	—	19½	2⅛	34¾	9⅞	3	19	1½	1	100
	V-212	V-212L	16	—	8	18⅜	—	19½	2½	34¾	12⅞	3	19	2	1¼	115
	V-247	V-247L	16	—	8	18⅜	—	21½	2½	34¾	12⅞	3	21	2	1¼	122
	V-279	V-279L	16	—	8	18⅜	—	21½	2½	34¾	14⅜	3	21	2	1¼	129
	V-333	V-333L	20	—	12	24	16⅝	22½	2⅞	43¼	14½	3⅛	22	2½	1½	182
	V-385	V-385L	20	—	12	24	16⅝	27½	2⅞	43¼	14½	3½	27	2½	1½	189
	V-500	V-500L	20	—	12	24	16⅝	27½	2⅞	43¼	19	3½	27	2½	1½	236
	V-610	V-610L	24⅛	24⅛	12	24	29¾	30½	—	51½	19⅛	3¾	30	2½	1½	350
	V-680	—	24⅛	24⅛	12	24	29¾	30½	5½	51½	19⅛	3¾	30	2½	2½	450

table 17 — material specifications

Type	Model	Copper Tube Size Inches	Copper Tube Wall Thickness Inches
VERTICAL DELIVERY	All Models	⅝ O.D.	.028

JUNCTION BOX	All units include a junction box either integral to the motor or attached to the unit casing. Explosion-proof units include an explosion-proof junction box attached to the motor.

table 18 — dimensions (air deflectors)

All dimensions in inches

Model Numbers	Cone-Jet L	Truncone M	Anemostat N	Louvers P
V-42	6½	12½	9¾	6½
V-59	6½	12½	9¾	6½
V-78	6½	12½	8⅞	6½
V-95	6½	12½	8⅞	6½
V-139	7½	13	11¾	7½
V-161	7½	13	11¾	7½
V-193	7½	13	11¾	7½
V-212	7½	13	11¾	7½
V-247	8	16	12¼	8
V-279	8	16	12¼	8
V-333	8½	16	12½	8½
V-385	10	21	14¾	10
V-500	10	21	14¾	10
V-610	10.5	21	—	10.5
V-680	10.5	21	—	10.5

hot water performance curves

200°F entering water temperature
60°F entering air temperature

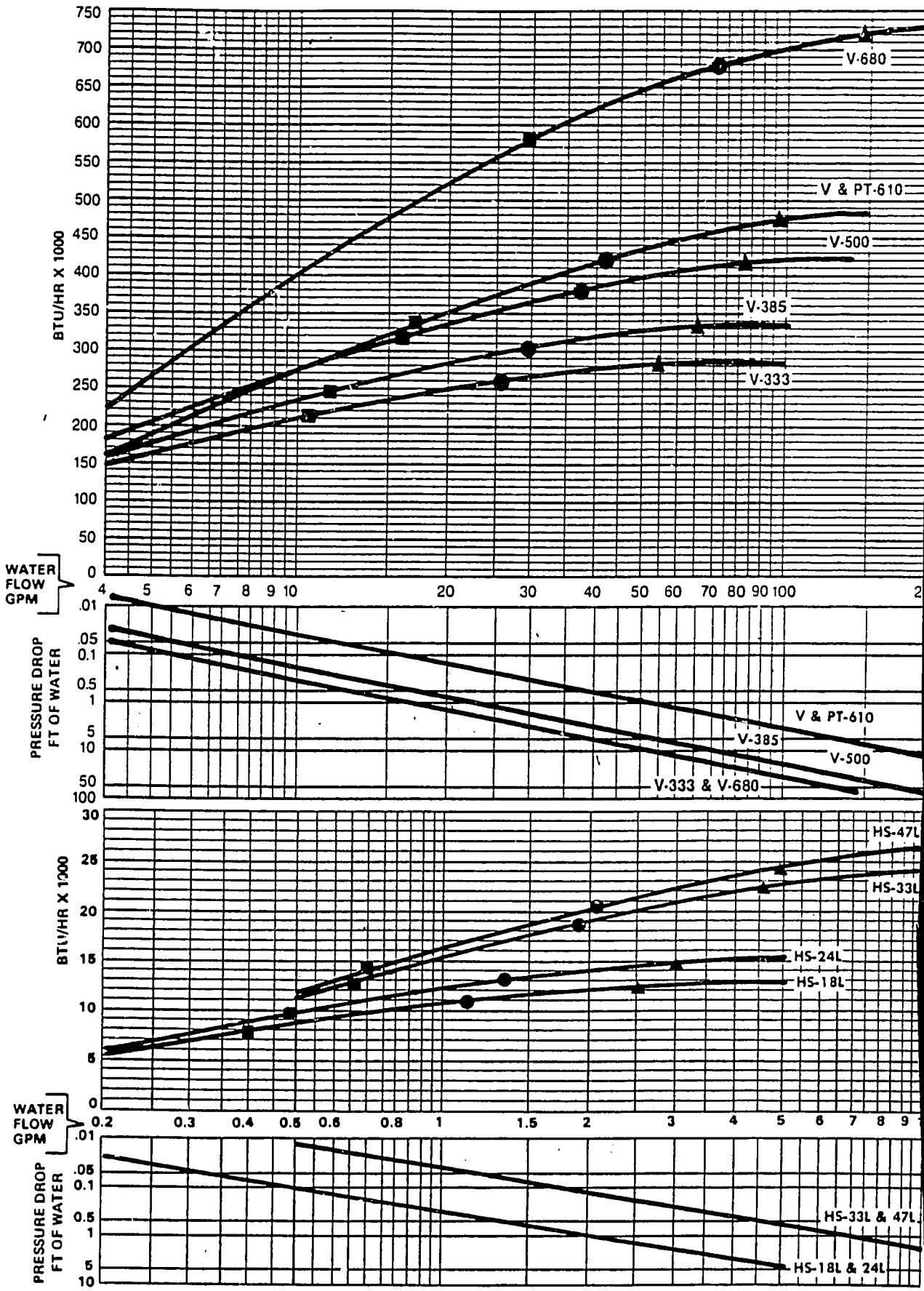

● Indicates point of 20°F water temperature drop
▲ Indicates point of 10°F water temperature drop
■ Indicates point of 40°F water temperature drop

piping for unit heaters suggested piping arrangements

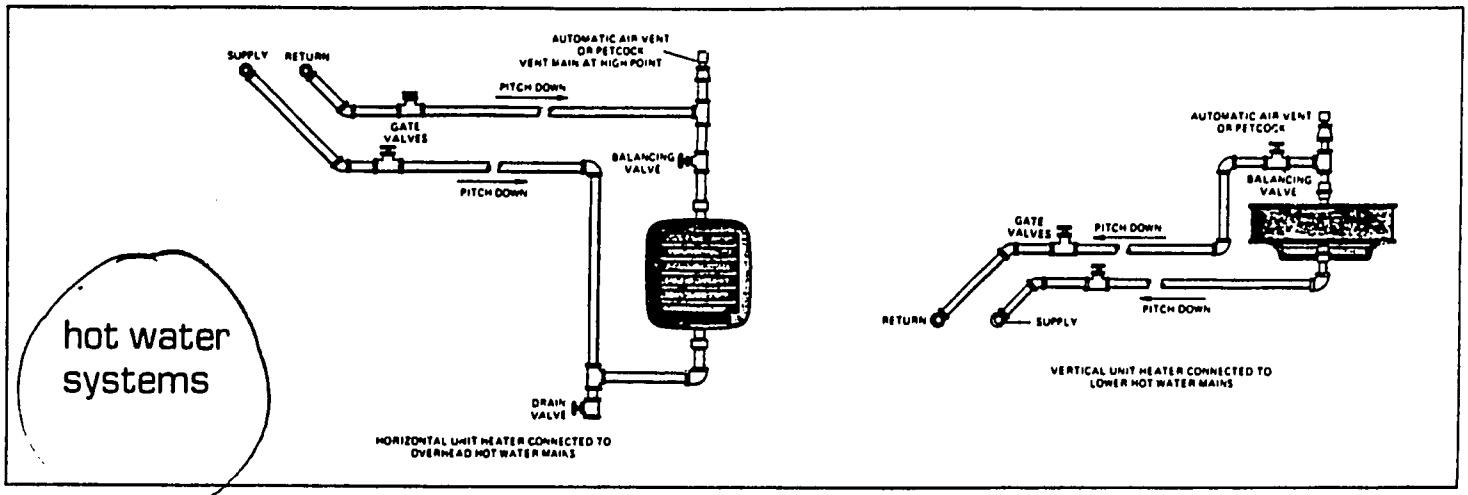

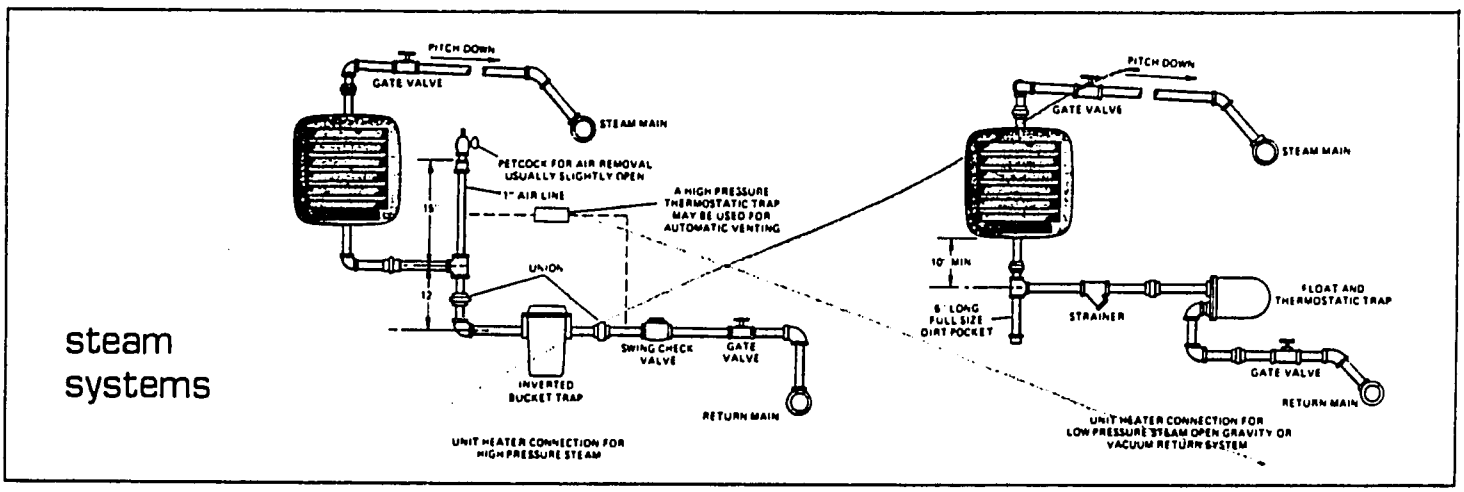

piping

1. Branch piping to and from unit heater should be the same size as unit connections and include swing joints to allow for expansion and contraction of the piping without placing a strain on the unit heater element. On steam systems, the branch piping should be taken off and returned above the centerline of the supply and return line.

2. Install pipe unions and shut-off valves in lines to and from each unit heater to allow maintenance or replacement of unit without shutting down and draining entire system. For hot water systems, include a balancing valve in return line when possible for water flow regulation. A drain valve should also be provided below each unit heater to allow removal of water from the heating coil if located in an area subject to freezing.

3. In steam or hot water systems, rapid air removal is required because entrained air is a cause of corrosion. Hot water systems should be equipped with suitable air vent valves for rapid and complete removal of air at the high points and ends of both supply and return mains. Proper air venting for steam systems can be achieved by use of a steam trap with an internal air vent.

4. Traps must be located below the outlet of the unit. Consult trap manufacturer for specific recommendations. Each steam unit heater should be provided with a trap of sufficient size and capacity to pass a minimum of two times the normal condensate released by the unit at the minimum differential pressure in the system. Trap capacity is based on the pressure differential between supply and return mains. Steam systems should be equipped with a float and thermostatic trap or an inverted bucket trap with an air bypass.

5. It is advisable to use a pipe line strainer before each steam trap draining a unit heater. This protection will reduce the maintenance of the steam trap. When strainers are used they could be installed between the unit heater and the trap and be the same size as the trap tapping. In order to catch dirt and scale, the strainer should have a screen perforation size smaller than the trap orifices.

6. On systems where the steam supply to the unit heater is modulated or controlled by a motorized valve, a vacuum breaker should be installed between unit outlet and the trap. If a vacuum breaker is used, it should be in conjunction with a float and thermostatic trap.

7. Install a scale pocket at bottom of unit heater to collect dirt and scale as shown in illustrations. Pipe diameter must be the same size as unit connections and about six inches long.

8. Provide adequate pipe hangers, supports, or anchors to secure the piping system independently of the unit heater.

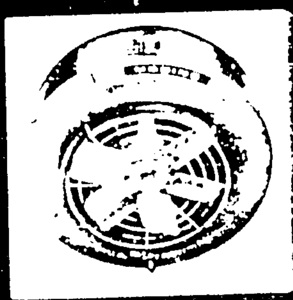
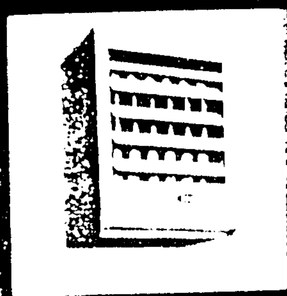
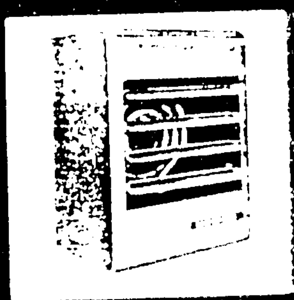
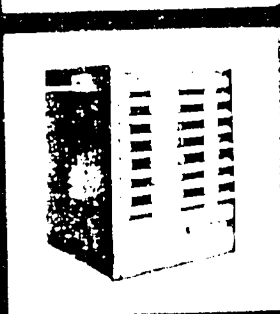
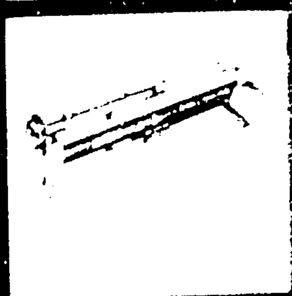
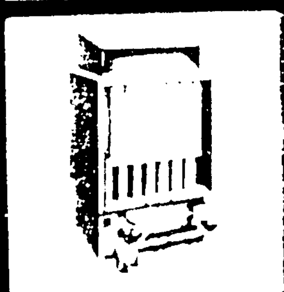
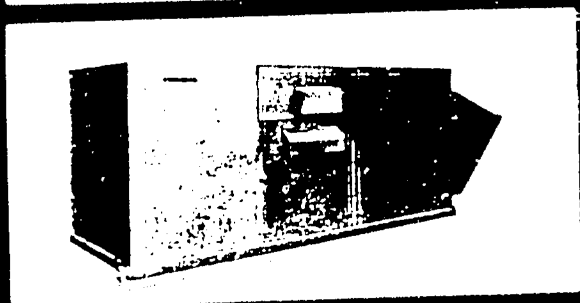
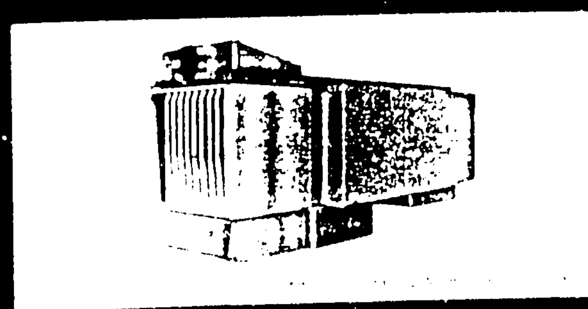
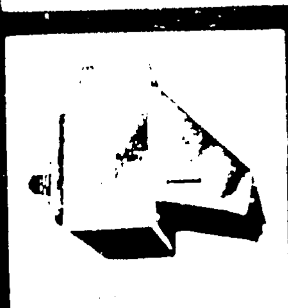
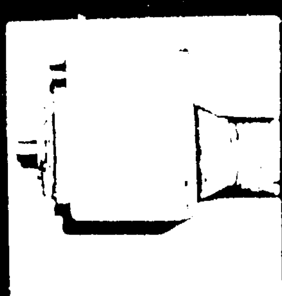

MODINE

C & S HYDRONICS, Inc.

Mailing Address:
P.O. Box 555 • Elm Grove, WI 53122

MANUFACTURERS REPRESENTATIVES
HVAC EQUIPMENT

14380 West Capitol Drive
Brookfield, Wisconsin 53005
Phone: (
FAX # (

DATE 4/19/91

TO: Driese Assocs.
ATTN: Bill
RE: Modine Budget #'s

FROM: Pat Bonfiglio

NUMBER OF PAGES: 1

Bill,

Budget prices

(1) V6105-05 3φ/50Hz $1,750.00 ea

(1) V6805-05 3φ/50Hz $2,175.00 ea

~~(Delivered Cost)~~

$3,925

Any questions - please call!!

AIR FRT TO PRAGUE ESTIMATED 2,000

$5,925

Thankyou,

P Bonfiglio

13

APPENDIX E
Calculations for Additional Wall Insulation Building D-2

The present wall of the building is constructed of 10 inch thick clay tile and a inside layer of plaster. Addition of a layer of insulation (5 cm styrofoam bead) and sand plaster on the outside of the wall finish will decrease the heat loss and improve the comfort conditions in the building. The insulation can be obtained locally and installed for a cost of 100 Kcs per meter^2. The building has insulating glass windows and is about 5 years old.

Outside wall R=2.35 no insulation; with insulation R=10.35
Change in U due to insulation = 0.324
Design at 18 °C inside and 3 °C average outside. In US units, savings = 27 * 0.324= 8.75 BTU/ft^2
4000 hrs * 8.75 = 35,000 btu/sq. ft/yr or,
35,000 * 10.76 * 1055 / 10^9 = 0.39 GJ/yr/meter^2
Savings @ 247.4 Kcs/GJ; 95.9 Kcs/meter^2/yr

Payback 125 Kcs/95.9 = 1.30 yrs.
The total area of wall is 950 meter^2
Total installation cost: 950 * 125 = 118,750 Kcs, based on obtaining materials and installation in Jablonec.

The total heat saved annually is 950 * 0.39 GJ = 370 GJ/yr; this is 0.34% of the annual steam usage.

The insulation should be a styrofoam bead board with a thickness of 2 inches (5 cm) and R=8.0.

See the attached sheet for a similar system available in the U.S.A.

The total cost of the insulation and exterior finish is 407,000 Kcs. The insulation cost used above assumes the owner will pay for the additional costs of the exterior finish.

ThoroWall®

R Values

Note: The illustrated wall sections are not drawn to exact detail nor are they workshop drawings. However, they are typical wall sections that can be developed using the ThoroWall system.

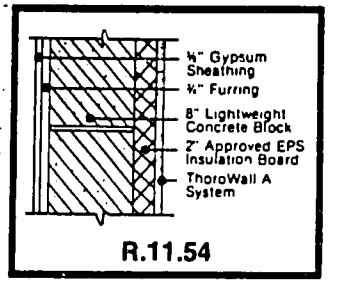

R.11.54

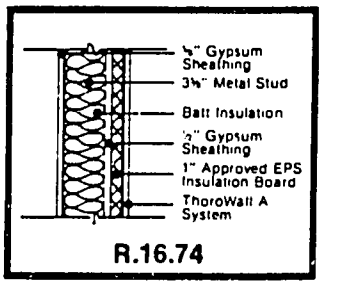

R.16.74

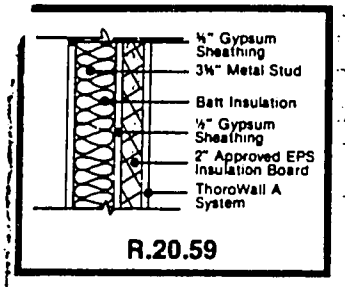

R.20.59

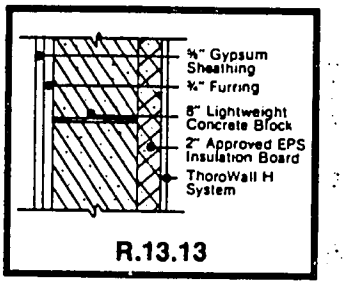

R.13.13

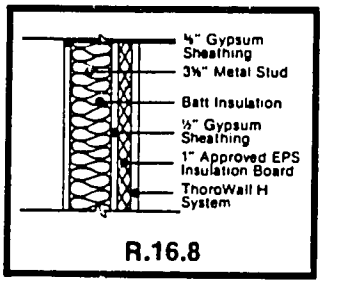

R.16.8

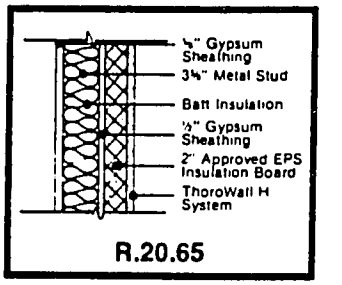

R.20.65

ThoroWall® H

A High-Impact, Polymer Modified Insulated Wall System

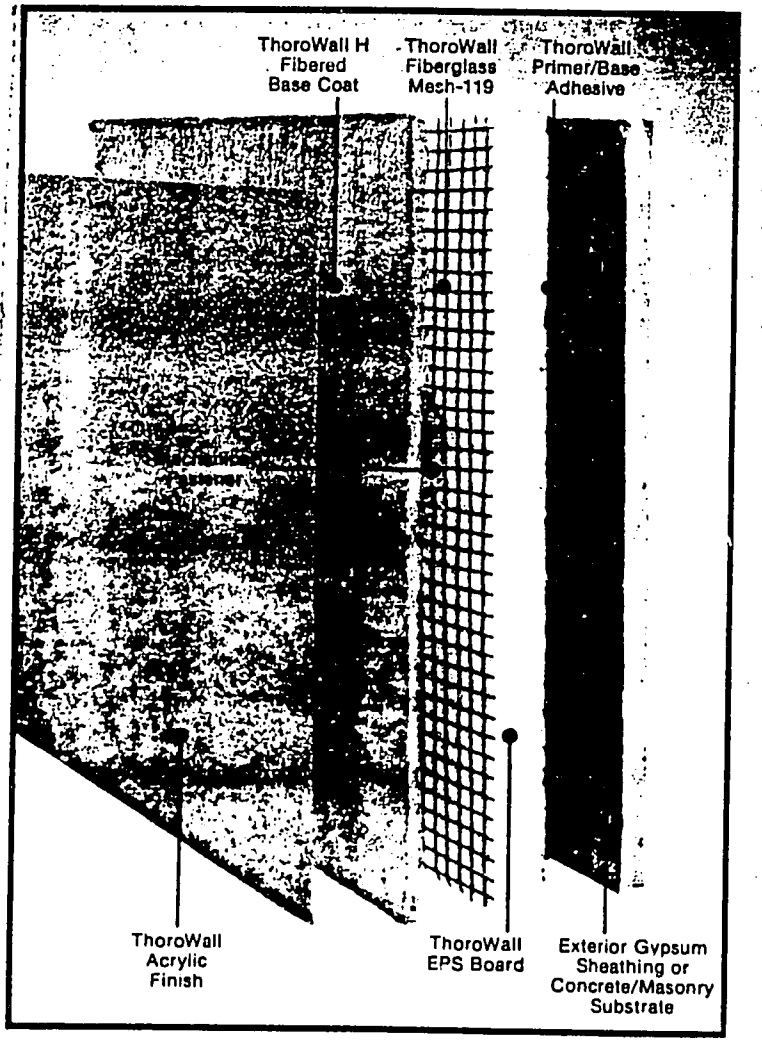

ThoroWall H is a high-impact, insulated wall system that can be used for new construction or retrofit, and can be applied directly to concrete, masonry, stucco, exterior gypsum sheathing, exterior-grade plywood and other approved exterior substrates.

ThoroWall H provides you with:

- A fibered cementitious base coat combined with a flexible acrylic finish which creates an extremely strong exterior system that is resistant to high-impact!
- An effective, low-cost method of insulating and encapsulating a structure!
- Consistent, waterproof protection!
- A low-weight exterior system that contributes to low structural costs!
- An attractive finish that's available in a wide range of colors and textures!
- Minimum heating and cooling costs!
- A fiber-reinforced base coat that eliminates the need for metal lath in the system!
- A flexible, exterior system that allows for structural movement without damage!

APPENDIX F
Heat Recovery from Zinc Plating Process and Rol Wash Machine

The potential for heat recovery from water used to cool the processes was not fully investigated due to the lack of time. The possible recovery of 0.3 to 0.5 GJ/hr of heat should be looked at in the future. The payback appears to be longer than 2 years.

APPENDIX G
Air Curtain

The air curtain in comparison to open unrestricted air flow was calculated as follows:

Average indoor temperature, 21 °C.
Average outdoor temperature during the heating season, 3 °C.
Air curtain operated only six months out of the year.
Door opening: 3 by 3 meters.

Estimated unrestricted flow annual losses:	608.3 GJ/yr
Estimated Air Curtain annual losses:	282.1 GJ/yr
Annual energy savings:	326.2 GJ/yr
	(235*326.2 = 76,657 Kcs/yr)
Estimated annual Air Curtain electrical cost:	4,509 Kcs/yr
Air Curtain Estimated Cost Installed:	202,500 Kcs

Payback = 202,500/(76657-4509) = 2.5 yrs

(See attached data summary sheet, quote and catalogue Information)

AUTOBRZDY 04-Apr-91
TRUCK DOCK AREA AIR CURTAIN

HEAT LOSS THROUGH INTERIOR DOORS.
NATURAL FLOWS WILL OCCUR THROUGH OPEN DOORS.
THESE DOORS CURRENTLY HAVE NO STRIP CURTAINS.
THE LOADING DOCK, MAINTAINED AT 37 °F, AND THE AVERAGE
OUTDOOR AIR TEMPERATURE 70 °F

THE THERMALLY INDUCED FLOW IS GIVEN BY G=313*AREA*(Hmpl*(Ti-To)/Ti)^1/2

WHERE THE TEMPERATURES ARE EXPRESSED IN °R; AREA AND HEIGHT IN FT^2 AND FT.

NUMBER OF DOORS		1		
DOOR DIMENSIONS:	HEIGHT:	10 FT	GAS COST:	$0.9180 PER THERM
	WIDTH	10 FT	ELEC COSTS:	$2.700 PER KW
	ASSUMED Hmpl	5 FT	ON-PEAK	$0.0140 PER KWH
OPENING EFFECTIVENESS:		80.00%	OFF-PEAK:	$0.0140 PER KWH
UNRESTRICTED FLOW:		6,986 CFM	(69.9 FPM)	
INSTALLED COST OF AIR CURTAIN:		$7,500		
STRIP CURTAINS EFFECTIVENESS:		0.00%		
AIR CURTAIN EFFECTIVENESS:		75.00%		
Heating system efficiency:		95.00%		
Manufacturer & Model:	King Model SI 1-10-500			
Air curtain has	3.55 kW of electric motors operating to produce this			
Air curtain lifetime:	20 YRS			
NO. OF MONTHS IN WHICH AIR CURTAIN OPERATES:		6		

It is assumed that while the air curtain helps restrict natural flows and the flow of the wind, it creates its own flow of outdoor air being forced into the heated space.
This flow is assumed to be 25.00% of the total flow of 8000 cfm, or 2000 cfm.

FROM BIN CALCULATION, OCCUPIED HEATING HOURS/YEAR: 2,200 HOURS/YEAR
12 HOURS/DAY

UNRESTRICTED FLOW ANNUAL LOSS	5,766 THERMS/YEAR	
~~WITH STRIP CURTAINS:~~	~~5,766 THERMS~~	
HEAT LOSS WITH AIR CURTAINS:	3,092 THERMS	COST
GAS ENERGY SAVINGS:	2,674 THERMS/YEAR	$2,454
GAS SAVINGS OVER NO BARRIER:	2,674 THERMS/YEAR	$2,454
ELECTRICAL ENERGY USED:	3.6 KW	$58
	7,810 KWH	$109
	ELEC COST	$167

COLONNA-SANDRONI, INCORPORATED
680 VALLEY ROAD • MENASHA, WISCONSIN 54952
PHONE: 414-735-0800 • FAX 414-735-9291

Quotation

Page 1 of 1 Quotation No. D6-QUOTE

To: MARK DIFONZO
FOTH & VAN DYKE

Date: 04/04/91 Bid Date: 04/04/91

Project: Autobrzdy

Project Location: Czechoslovakia

Arch./Engr.:

Terms: NET 30 DAYS F.O.B.: FACTORY

WE ARE PLEASED TO QUOTE THE FOLLOWING EQUIPMENT FOR THE ABOVE PROJECT:

ITEM A

(1) KING NATIONAL INDUSTRIAL AIR CURTAIN
Model SI1-10-300
- 16 gauge galvanized steel construction with a lacquer paint finish
- Centrifugal forward curved blower wheels
- OSHA approved belt guard
- 15° adjustable discharge nozzle
- Solid steel fan shaft mounted with pillow block bearings
- 5 H.P. ODP belt driven fan motor
- Steam distributing heating coil
- Copper tube aluminum finned coil
- Voltage 208, 230-460/60/3

NOTE: Starters, disconnect switches, vibration isolators and all controls by others

TOTAL NET PRICE, LESS FREIGHT $4,700.00

TOTAL NET ADDITIONAL FOR NEMA1 CONTROL PANEL. PANEL INCLUDES: OVERLOAD HEATERS, FUSES AND TRANSFORMERS, HAND-OFF-AUTO SWITCH, DISCONNECT SWITCH, MOTOR STARTER, TERMINAL STRIP (FIELD MOUNTED) -- ADD ..... $ 670.00

TOTAL NET ADDITIONAL FOR FACTORY MOUNTING OF NEMA1 PANEL ..... $ 190.00

TOTAL NET ADDITIONAL FOR DOOR SWITCH ..... $ 75.00

TOTAL NET ADDITIONAL FOR ROOM THERMOSTAT (OFF-ON) ..... $ 80.00

TOTAL NET ADDITIONAL TO GO TO TEFC FAN MOTOR ..... $ 125.00

TOTAL NET ADDITIONAL TO GO TO LOW PROFILE UNIT ..... $ 335.00

TOTAL NET ADDITIONAL TO PROVIDE A FILTER SECTION WITH ONE SET OF THROWAWAY FILTERS $1,650.00

ACCEPTANCE: If this quotation is to be used as a Purchase Order, please sign below and return to our office.

Buyer _____

By _____

Date of Acceptance _____

Thank you for the opportunity to quote on the material listed above.

Respectfully submitted,

COLONNA-SANDRONI, INC.
Fox Valley Office

By Dan Lobermeier
DAN LOBERMEIER

All sales, use or other taxes levied in respect to material itemized herein are not included in this quotation. Standard terms and conditions on reverse side are a part of this proposal.

92

King AIR CURTAIN

SI SERIES	FORM AC-101-1 July 1, 1990
STANDARD INDUSTRIAL AIR CURTAIN STANDARD AND OPTIONAL FEATURES	

Introducing The Standard Industrial Air Curtain

Diagramed below is the Standard Industrial Air Curtain with a view of some typical standard and optional features.

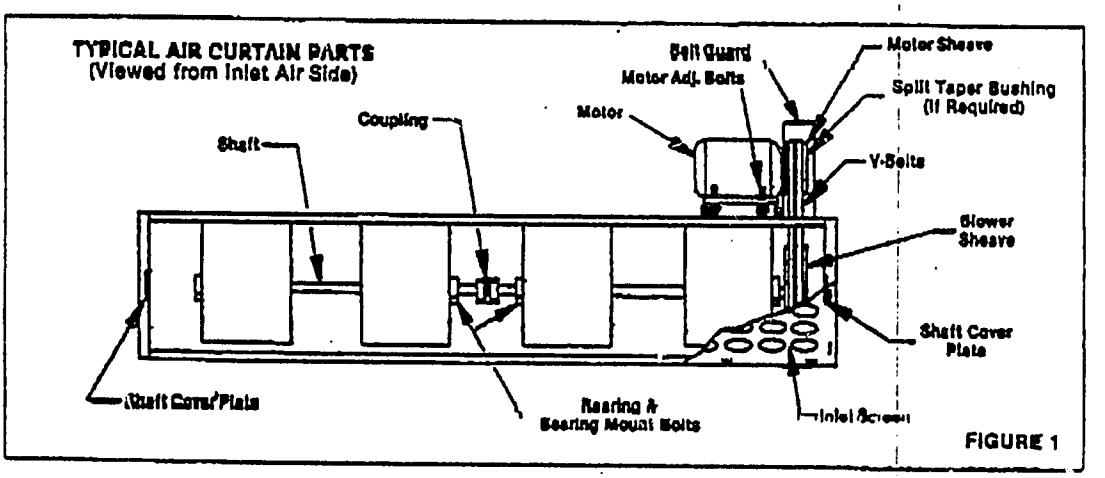

FIGURE 1

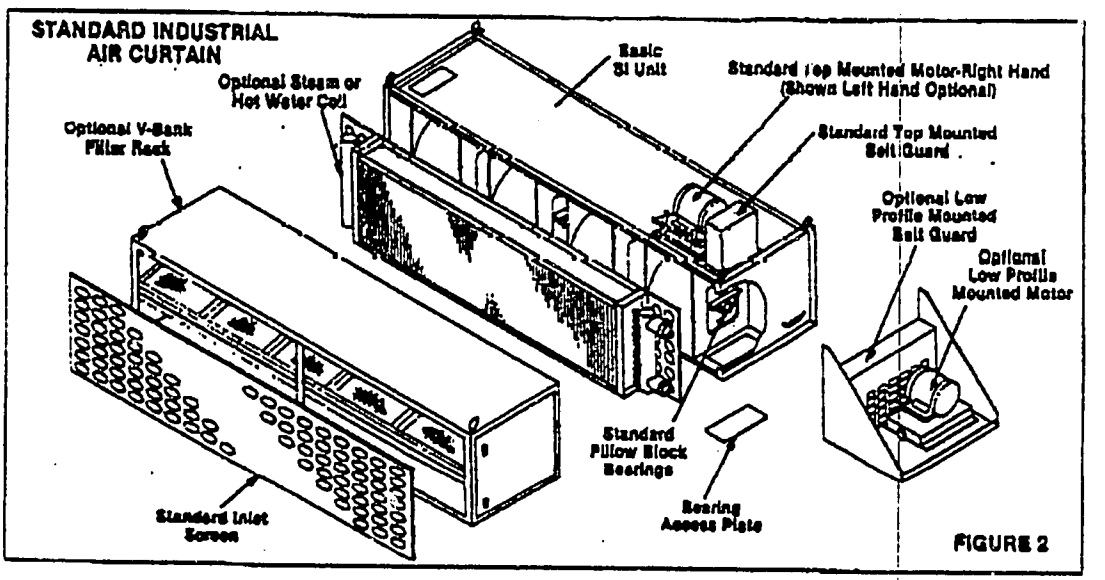

FIGURE 2

THE KING CO. 1001 N.W. 21st Avenue, P.O. Box 287 • Owatonna, MN 55060 • Phone 507/451-3770
FAX 507/455-7400

Air Curtain Selection

Free computer guarantee

King was the first to apply computer simulation to calculating air curtain selection. In three to four weeks we can run a test model based on your specific building requirements. At no cost to you. We will further guarantee in writing (1) a specific percentage reduction of infiltration and that (2) the air curtain will maintain a specified temperature in the door area. King is the only company in the industry guaranteeing either efficiency or temperatures.

We recommend the computer method. It is the only way to accurately predict air curtain performance. However, if time does not permit its use, you can get an indication of which air curtain you need by calculating the infiltration index.

How to calculate your infiltration index

The infiltration index is based upon the four most influential factors affecting air curtain performance.

- Plant size
- Tightness of construction
- Building pressurization
- Door height

Doors on adjacent or opposite sides also play a very important role in determining air curtain performance. In this situation air curtains can earn their best returns on investment while providing the most dramatic improvements in comfort. However, to evaluate for such conditions goes beyond the scope of this procedure. Check with you King Representative.

Infiltration Index = Plant Volume Leakage Factor (PVF) + Mechanical Pressure Factor (MPF)

STEP ONE: Plant Volume Factor = Cubic Feet of Plant Area x .0000125 x Building Tightness Number

(Note: Building Tightness Number equals one if tight building or 1.25 if loose building)

STEP TWO: Mechanical Pressure Factor =

$$\left[\frac{(\text{Exhaust air}_{cfm} - \text{make up air}_{cfm})}{\text{Cubic Feet of Plant Area} \times \text{Building Tightness Number}} \times 6710\right]^{1.5}$$

(Note: If building is under positive pressure use absolute value when calculating Mechanical Pressure Factor and multiply by −1

Infiltration Index = PVF + MPF

STEP THREE: Unit Selection: Use the Infiltration Index and Door Height to determine the appropriate SI Series.

UNIT SELECTION TABLE

DOOR HEIGHT	INFILTRATION INDEX		
	0-25	25-75	75-200
8'-9'	SI 1(U)	SI 3(U)	SI 2
10'-11'	SI 2(U)	SI 2	SI 2
12'-13'	SI 3(U)	SI 2	SI 3
14'-15'	SI 3	SI 3	ECXX
16'-17'	ECX	ECX	ECXXX
18'-20'	ECX	ECXXX	Custom

Air curtains can be used on doors up to 40' high. However, for doors over 20' and infiltration indexes over 200 consult with your King Representative.

EXAMPLE

Given: Plant with 100,000 S.F. and 30' ceiling. Assume plant tightness of 1.25. Exhaust air = 20,000 Make up air = 15,000. The infiltration index computes as follows:

PVF = 100,000 x 30' x .0000125 x 1.25

PVF = 46.9

$$MPF = \left[\frac{(20{,}000-15{,}000) \times 6710}{3{,}000{,}000 \times 1.25}\right]^{1.5}$$

MPF = 26.8

Infiltration Index = PVF + MPF
= 46.9 + 26.8
= 73.7

For a 15' high door use Series SI3 Dimension A on next page.

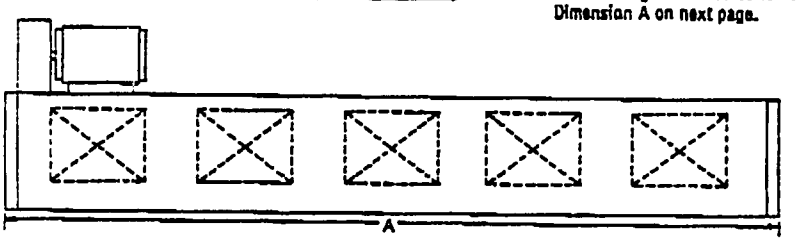

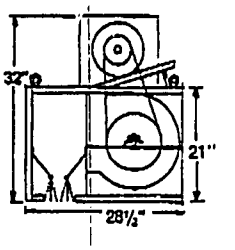

SPECIAL NOTES:

- Refer to our energy conservation air curtain brochure for selections marked ECX, ECXX, ECXXX.
- We recommend heated units whenever employee comfort is a concern. (U) signifies unheated units may be used.

Copyright 1981: The King Company. All Rights Reserved.

EEEEE

84

SI SERIES PERFORMANCE DATA

	MODEL	PLENUM WIDTH (DIMENSION A)	VOLUME CFM	VELOCITY FPM	HORSEPOWER*	SHIPPING WEIGHT	STEAM OR HOT WATER HEATING			GAS HEATING			
							STEAM CAPACITY MBTU at 25 lb PSI	HOT WATER CAPACITY MBTU at 180° EWT with 20° DROP	TOTAL SHIPPING WEIGHT	INDIRECT FIRED CAPACITY MBTU (OUTPUT)	TOTAL SHIPPING WEIGHT	DIRECT FIRED CAPACITY MBTU	TOTAL SHIPPING WEIGHT
SI1 SERIES	SI1-3-100	36"	2500	4000	1	300 lb.	175	105	315 lb.	231	690 lb.	255	630 lb.
	SI1-4-100	55"	3200	4000	1	400 "	232	140	500 "	308	730 "	330	690 "
	SI1-6-150	79"	4800	4000	1.5	500 "	309	210	600 "	462	1180 "	470	1000 "
	SI1-8-300	103"	6400	4000	3	600 "	479	280	870 "	616	1540 "	630	1400 "
	SI1-10-500	127"	8000	4000	5	740 "	642	350	840 "	616	2110 "	790	1750 "
	SI1-12-500	155"	9600	4000	5	900 "	761	420	1000 "	924	2120 "	945	2050 "
	SI1-14-600	179"	11200	4000	2/3	1250 "	788	490	1450 "	1078	2320 "	1103	2345 "
	SI1-16-600	203"	12800	4000	3/3	1300 "	968	500	1600 "	1232	2520 "	1264	2625 "
SI2 SERIES	SI2-3-200	36"	3600	6000	2	300 "	202	130	355 "	231	730 "	370	630 "
	SI2-4-300	55"	4600	6000	3	425 "	275	105	600 "	308	700 "	475	700 "
	SI2-6-300	79"	6900	6000	3	535 "	363	245	670 "	462	1250 "	632	1100 "
	SI2-8-500	103"	9200	6000	5	625 "	521	325	900 "	616	1575 "	868	1450 "
	SI2-10-750	127"	11500	6000	7.5	775 "	868	410	950 "	616	2160 "	1046	1800 "
	SI2-12-750	155"	13800	6000	7.5	950 "	790	490	1020 "	924	2160 "	1564	2100 "
	SI2-14-1000	179"	16100	6000	5/5	1175 "	884	580	1575 "	1078	2390 "	1679	2420 "
	SI2-16-1000	203"	18400	6000	7.5/7.5	1275 "	1042	660	1700 "	1232	2570 "	2093	2700 "
SI3 SERIES	SI3-8-500	79"	8250	6000	5	585 "	400	275	740 "	462	1320 "	728	1150 "
	SI3-8-750	103"	11000	6000	7.5	750 "	585	365	930 "	616	1610 "	1265	1470 "
	SI3-10-1000	127"	13750	6000	10	1050 "	722	455	1250 "	616	2230 "	1441	1850 "
	SI3-12-1500	155"	16500	6000	15	1100 "	925	550	1450 "	924	2260 "	1679	2160 "
	SI3-14-1500	179"	19250	6000	7.5/10	1250 "	965	640	1575 "	1078	2470 "	1974	2520 "
	SI3-16-1500	203"	22000	6000	10/10	1300 "	1130	740	1700 "	1232	2710 "	2162	2800 "

*STANDARD VOLTAGE is 3PH/208-230-460/60 cycle, for deviations, see options list. For additional variations, such as Low Clearance, Motor Enclosures, Etc., Contact Area Representative.

Recommended mounting heights for INSECT CONTROL: SI1 SERIES-Doors up to 8' High; SI2 SERIES-Doors up to 12' High; SI3 SERIES-Doors up to 16' High.

Copyright 1991: The King Company. All Rights Reserved.

85

APPENDIX H
Air Exhaust from the Electroplating Processes

Energy is lost to the atmosphere from the air exhaust hoods over the electroplating baths. The amount of exhaust from the Galvatek galvanizing process and hard chrome plating process was measured and the energy loss calculated as follows:

Galvatek Galvanizing Process

Three identical exhaust fans located on the roof, manufactured by Galvatek. The velocity and temperature was measured on two of the exhaust fans and the third was estimated based on the average of the other two measurements. The velocity was measured in the duct ahead of the fan, with a cross-section of 0.3487 meters^2.

Fan #1, measurements, avg. 13.7 meters/sec., 22 °C, 13.7*0.3487*3600 = 17,198 m^3/hr

Fan #2, measurements, avg. 14.8 meters/sec., 22 °C, 14.8*0.3487*3600 = 15,579 m^3/hr

Fan #3, (17198+15579)/2 = 16,389 m^3/hr

Total exhaust volume = 49,166 m^3/hr at 22 °C

Heat loss equation:

Q = flowrate * density * heat capacity * temperature difference

where: density: 1.2 kg/m^3
heat capacity: 1005 J/kg °C
temp. diff.: (22 - 3) °C
(mean outdoor temperature during the heating season 3 °C)

Q = 49166*1.2*1005*(22-3)/10^9 = 1.127 GJ/hr

With an air-to-air heat exchanger, 50% of this energy could be recovered as warm building make-up air during the heating season.

Hours of operation: one shift (8hrs/day), 5 days/week, 26 weeks/year: 1040 hrs/year.

Energy Saved = 1.127*0.50*1040 = 585.8 GJ/yr (137,670 Kcs/yr)

Estimated cost for one air-to-air heat exchanger, ducts, and clean air fan installed; 2,344,000 Kcs. Heat exchanger must include corrosion resistant construction due to the corrosive fumes from the plating operation. The existing exhaust ducts and exhaust fan are constructed from plastic. All three exhausts are to be ducted from the existing exhaust fans into the heat exchanger.

Payback(not including electric consumption): 2344000/137670 = 17 years

Hard Chrome Plating Process

Three exhaust fans located in a room above the plating process. The velocity and temperature were measured on two of the exhaust fans and the third was estimated based on the fan nameplate rating. The velocity was measured in the duct ahead of the fan.

Fan #1, measurements, avg. 3.67 meters/sec., 26 °C, cross-section, 0.4703 m^2
3.67*0.4703*3600 = 6214 m^3/hr

Fan #2, measurements, avg. 4.25 meters/sec., 26 °C, cross-section, 0.4927 m^2
4.25*0.4927*3600 = 7539 m^3/hr

Fan #3, estimated from fan nameplate, 4245 m^3/hr

Total exhaust volume = 18,000 m^3/hr at 26 °C

Heat loss equation:

Q = flowrate * density * heat capacity * temperature difference

where: density = 1.185 kg/m^3
heat capacity: 1005 J/kg °C
temp. diff.: (26 - 3) °C
(mean outdoor temperature during the heating season 3 °C)

Q = 18000*1.185*1005*(26-3)/10^9 = 0.493 GJ/hr

With an air-to-air heat exchanger, 50% of this energy could be recovered as warm building make-up air during the heating season.
Hours of operation: two shifts (16hrs/day), 5 days/week, 26 weeks/year: 2080 hrs/year.

Energy Saved = 0.493*0.50*2080 = 513.8 GJ/yr (120,734 Kcs/yr)

Estimated cost for one air-to-air heat exchanger, ducts, and clean air fan installed: 1,144,000 Kcs. Heat exchanger must include corrosion resistant construction due to the corrosive fumes from the plating operation. The existing exhaust ducts are constructed from plastic. All three exhausts are to be ducted from the existing exhaust fans into the heat exchanger.

Payback(not including electric consumption): 1144000/120734 = 9.5 yrs

APPENDIX I
Photographs

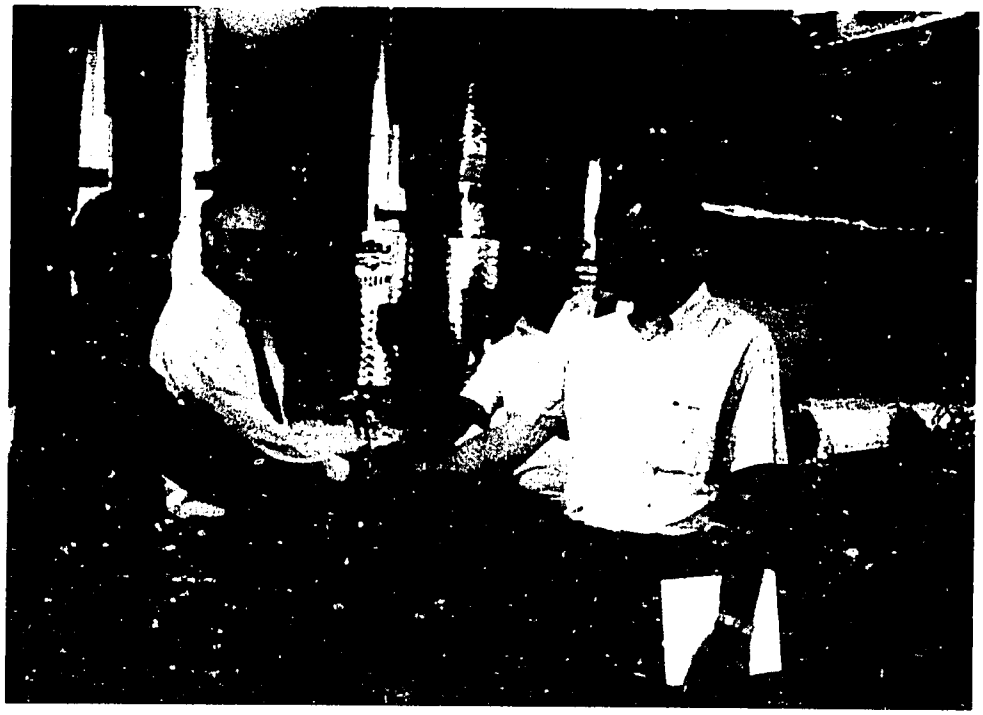

1. Piping and valve insulation. From left to right: Victor Payer (Power Engineer), Eduard Vrastil (Technical Deputy Director), Robert Anderson (RMA) and Robert Erickson (RMA).

2. Domestic water tanks, where Honeywell control valves were later installed to monitor temperature.

Victor Payer unpacks a Danfoss valve, which will monitor space heating.

APPENDIX J
List of Abbreviations

AC	= alternating current
amps	= amperes
atm	= atmosphere = 14.696 pounds per square inch
bar	= 100,000 pascals = 14.504 pounds per square inch
BTU	= British thermal unit
cfm	= cubic feet per minute
cm	= centimeter = 0.3937 inches
cm^2	= square centimeter = 0.155 square inches
CO	= carbon monoxide
CO_2	= carbon dioxide
DC	= direct current
°C	= degree Celsius T[°C] = 5/9*(T[°F] - 32
°F	= degree Fahrenheit
°R	= degrees Rankine T[°R] = T[°F] + 460
eff	= efficiency
ex air	= excess air
Gcal	= gigacalorie = 1 billion calories = 3.968 million BTU
GJ	= gigajoules = 1 billion joules
gph	= U.S. gallons per hour
gpm	= U.S. gallons per minute
GWh	= gigawatt hours = 1 billion watt hours
H_2	= hydrogen
H_2O	= water
H_2SO_4	= sulfuric acid
hectare	= 10,000 square meters = 2.471 acres
hectoliter	= 100 liters = 26.42 U.S. gallons
Hg	= mercury
hr	= hour
Hz	= hertz = cycles per second
J	= joules
kcal	= kilocalories = 1 thousand calories = 3.968 BTU
Kcs	= 29.77/$1 US
kg	= kilogram = 2.2046 pounds
Kgcc	= 7,000 Kcal = 27,776 BTU
kJ	= kilojoules = 1 thousand joules = 0.947813 BTU
km	= kilometer = 0.621 miles
kN	= kilonewton = 1 thousand newtons
kPa	= kilo pascals = 1 thousand pascals = 0.14504 pounds per square inch
kV	= kilovolts = 1 thousand volts
kVA	= kilovolt-amperes
kVAr	= kilovars = 1 thousand volt-amperes (reactive)
kW	= kilowatt = 1 thousand watts
kWh	= kilowatt hour = 1 thousand watt hours
lbs	= pounds
liter	= 0.2642 U.S. gallons = 0.03531 cubic feet
m	= meter = 39.37 inches

m^2	= square meter = 10.76 square feet
m^3	= cubic meter = 35.31 cubic feet
mA	= milliampere = 0.001 amperes
metric ton	= 1 thousand kilograms = 1.1023 U.S. tons
mg	= milligrams
min	= minute
MJ	= megajoules
mm	= millimeter = 0.03937 inches
MPa	= 1 million pascals = 145.04 pounds per square inch
MVA	= megavolt-amperes
MW	= megawatt = 1 million watts
MWh	= megawatt hours = 1 million watt hours
NG	= natural gas
nm	= nanometer
Nm^3	= cubic meters at standard conditions of temperature and pressure (20°C and 1 atmosphere)
NO_X	= nitrogen oxide
O_2	= oxygen
P	= pressure
PC	= personal computer
ppm	= parts per million
psi	= pounds per square inch
psig	= pounds per square inch (gauge)
R	= thermal resistance
s	= second
SO_2	= sulfur dioxide
sq ft	= square feet
Tcal	= teracalorie = 1 trillion calories = 3.968 billion BTU
T	= temperature
V	= volts
VArs	= volt-amps (reactive)
VSD	= variable speed drive
yr	= year