PN-ABK-692

Report No. 90-2

A Report of the

Office of Energy
Bureau for Science and Technology
United States Agency for International Development

Interconnection of Sugar Mills to the Thailand Electric Power Grid

Issues and Prospects

Prepared by
Don Hertzmark
Consultant

Harold H. Miura
Harold Miura, Inc.

Ted W. Vorfeld
Thermal Engineering Corp.

John Kadyszewski
Winrock International

BIOMASS ENERGY SYSTEMS AND TECHNOLOGY PROJECT
DHR-5737-A-00-9058-00

AUGUST 1990

EXECUTIVE SUMMARY 7
Background 7
Issues Addressed 8
Major Findings 9
Immediate Term Potential 9
Short Term Generation Options 10
Financial Feasibility 11

1.0 BACKGROUND AND INTRODUCTION 13
1.1 Previous Efforts 13
1.2 Thailand's Electricity Situation 13
1.3 Cogeneration Opportunities in the Sugar Industry 14
1.3.1 Generation Options 14
1.3.2 Discussion of Generation Options 15
1.3.3 Discussion of Interconnection Issues 16
1.4 Economic Analysis of Investment and Interconnection Options 16

2.0 GENERATION OPTIONS AND CAPITAL COSTS 17
2.1 Introduction 17
2.1.1 Option 1 17
2.1.2. Option 2 18
2.1.3 Option 3 18
2.1.4 Option 4 19
2.1.5 Capital Costs 22
2.2 Processing Changes for Various Options 22
2.2.1 Option 1 24
2.2.2 Option 2 24
2.2.3 Option 3 25
2.2.4 Option 4 26
2.3 Range of Export Capabilities for Various Options 26
2.4 Recommended Methodology for Determining the Export Capability of Each Investment Option 27
2.4.1 Option 1 28
2.4.2 Option 2 28
2.4.3 Option 3 28
2.4.4 Option 4 29
2.4.5 Other Iterations of the Model 29

3.0 ELECTRICAL INTERCONNECTION ISSUES 31
3.1 Introduction: General Issues 31
3.1.1 Purchase Rates 31

3.1.2 Interconnect Cost 32
3.1.3 Design and Review Process 32
3.1.4 System Characteristics 32
3.1.5 System Arrangement 33
3.1.6 Protective Relaying Philosophy 33
3.1.7 Operating Procedures 33
3.1.8 Instruction and Training 34
3.2 Interconnection Equipment 34
3.2.1 Metering 34
3.2.2 Protective Relays 35
3.2.3 Synchronizing Equipment 35
3.2.4 Tie Transformer 35
3.2.5 Grounding Transformer 35
3.2.6 Tie Line Controller 35
3.3 Implementation of Interconnections 36
3.3.1 Short Term Interconnection 36
3.3.2 Long Term Interconnection 36
3.4 Conditions for Feasibility 37
3.4.1 Capacity of System 41
3.4.2 Performance of System 41
3.4.3 Arrangement of System 41
3.5 Anticipated Problems 41
3.6 Relevance for Prospective Cogenerators 42

4.0 ECONOMIC ISSUES 43
4.1 Introduction 43
4.2 Generation Costs 44
4.2.1 Investment Requirements 45
Option 1 46
Option 2 47
Option 3 50
Option 3a 52
Option 4 53
Option 4a 53
4.2.2 Fuel Price Issues 56
4.3 Power Purchase Price Issues 60
Findings on Pricing Issues 64

ANNEXES
1: Itinerary of the Thailand Cane Energy Mission, October, 1989
2: Fuel Netback Value and Rate of Return Calculations
3: Sugar Factory Case Studies and Electrical Schematics
4: Electrical Schematics

Tables

2.1. Summary Of Installed Costs Of Various Options (US$ x 1000) 23
2.2. Ranges of Export Options for Power and Energy 27
3.1. Capital Cost: Typical Short Term Interconnection - Up to 1 MW 37
3.2. Capital Cost: Typical Long Term Interconnection - 1 to 5 MW 38
3.3. Capital Cost: Typical Long Term Interconnection - 5 to 10 MW 39
3.4. Capital Cost: Typical Long Term Interconnection - More than 10 MW 40
4.1. Option 1: Investment Costs and Operational Parameters 46
4.2. Option 2: Investment Costs and Operational Parameters 49
4.3. Option 3: Investment Costs and Operational Parameters 51
4.4. Option 4: Investment Costs and Operational Parameters 54
4.5. Netback Values For Bagasse (ß/tonne)and Oil ($/bbl) 59
4.6. Rate of Return Analysis for Sugar Mills: Mid-range Case 61

Figures

2.1. Air Condenser Arrangement for Option 2 (5000 kW Export) 19
2.2. Typical High Efficiency Steam Cycle - Stand Alone -Option 3 20
2.3. Typical High Efficiency Steam Cycle -Option 4 (25,000 kW Export) 21
4.1. Costs of Immediate Term Generation Options 48
4.2. Interconnect Costs 48
4.3. Generation and Interconnection Costs for Options 3 and 3a 55
4.4. Generation and Interconnection Costs for Options 4 and 4a 55

INTERCONNECTION OF SUGAR MILLS TO THE THAILAND ELECTRIC POWER GRID: ISSUES AND PROSPECTS

EXECUTIVE SUMMARY

Background

The report contains the findings of a team sent to Thailand by USAID in November 1989 to assess the short term feasibility of cogenerating surplus electricity at agricultural processing facilities for sale to EGAT. The rationale for this mission was to provide support for the Royal Thai Government's Working Group on Cogeneration. In particular, the government wanted to know the immediate and short term (<5 years) potential for such facilities to generate power for the Kingdom's system. The major issue of interest was whether such mills could be successfully interconnected with the existing EGAT and PEA[1] transmission and distribution systems.

Review of captive biomass wastes at existing agricultural processing facilities in advance of the team visit showed the largest potential to be at sugar factories.[2] Consequently, as a basis for the current work, the team used a substantial body of data which had been generated by an earlier cane energy project (1986).[3] The 1986 team found that cane electricity could be feasible if generated efficiently using low cost field residues. Opportunities for higher capacity investments were analyzed briefly and found to merit additional consideration. Interconnection issues were treated as an adjunct to the fuel and generation concerns.

In 1989 Thailand's torrid pace of economic growth started to outpace the additions to the capacity of the electric power system made earlier in the decade. At the same time, the government decided that more than half of the investment

[1] EGAT stands for Electric Generating Authority of Thailand, a state-owned generation and transmission monopoly. The PEA is the Provincial Electric Authority which distributes electricity outside of metropolitan Bangkok.

[2] "Biomass-Fueled Electric Power Survey" (Chemstar, Ltd., Bangkok, Thailand, 1989, unpublished).

[3] Biomass Systems and Technology Program, *Electric Power from Cane Residues in Thailand*, Office of Energy Report 89-03 (Washington, D.C.: U.S. Agency for International Development, 1988).

Previous Page Blank

required by the electric power system in the 1990's should come from the private sector.

Issues Addressed

In the very short term, the Thai government wished to know how new suppliers of electricity might be connected to the EGAT and PEA systems and whether any appreciable amounts of electricity could be produced cost-effectively in existing facilities with modest capital expenditures. The concerns voiced were of three types:

1. The speed at which interconnection can be carried out including the potential for the immediate and short term
2. The impacts which interconnection will have on the PEA distribution network locally and nationally
3. The cost of interconnection

To address these concerns, USAID provided a team from Winrock International. The team looked at four alternatives:

1. Immediate short term interconnection - maximize use of existing equipment with minimal investment for metering and protection devices which could go on stream in about six months.
2. Immediate permanent interconnection - investments for 1-5 MW which could go on stream in 12-18 months.
3. Short term investments - investments in new generating and interconnection equipment of 5-25 MW which could supplement existing mill operations. These investments could go on stream in 24-36 months.
4. Short term investments - investments in new dedicated generating and interconnection equipment of approximately 25 MW which could supersede existing mill power plants. These investments could go on stream in 24-36 months.

Marginal investments - investments for 10-25 MW which have the salient features of options 3 and 4, can be added when factories upgrade equipment or when new or relocated factories are set up.

In the first two cases, interconnection was based on the existing tie lines to the PEA system. In the latter two cases, interconnection would usually consist of dedicated tie lines into high voltage sub-transmission or transmission lines. Exports up to 5 MW appear to be the practical limit for power to be exported into the 22 kV distribution lines of PEA. Plants with capacities of as much as 10 MW can be

absorbed directly into PEA substations. Plants with capacities above 10 MW would tie directly into the EGAT system.

Guidelines for the Winrock team on prices to use for electric power sales were given by the cogeneration working group. These prices differ considerably from those used in the 1986 report. Consequently, the results differ substantially as to the relative financial and economic attractiveness of various options. However, the technical elements of the 1986 work remain valid.

Major Findings

The team analysis encompassed generation, pricing, and investment issues. However, the findings given below are limited to the generation and interconnection issues which occasioned the study.

Immediate Term Potential

With regard to the feasibility of immediate term interconnection, the team found that:

1. There are no serious design or installation problems involved with small tie lines. Virtually all of the mills already have small lines.
2. The volumes of power that can be pushed into the PEA system are not sufficient to cause load management or stability problems. Mills will need to be dispatched by PEA.
3. Even for relatively minor modifications, a minimum of six months might be required for design, procurement, and installation.
4. Other equipment modifications and changes which are necessary for exporting power in the immediate term could be effected within the time required to obtain transformers, switching equipment, and meters.
5. The total cost of the interconnection is about $85-150/kW (ß2,200-3,800).

This means that:

1. In the immediate term (i.e., 1990-1991) little or no additional power can be supplied from agricultural processing facilities in Thailand to the EGAT and PEA systems.
2. The small volumes of power (<5 MW) generated by the mills will go into the PEA sub-transmission system.

3. To obtain additional power supplies in the 1992 peak demand season, contracts with cogenerators will need to be signed by March 1991.

Short Term Generation Options

The short term and marginal investments for export of 5 MW or more of capacity call for different approaches to the interconnection issue. Investments are larger and the outputs from the exporting mills are more substantial relative to the capacity of the local system. The team found that:

1. Mills generating in excess of 5 MW and up to at most 10 MW would need to export their power to the 22 kV PEA transmission system. This requires, among other things, dedicated tie lines and transformers.
2. Larger mills, those exporting more than 10 MW, would need to make a dedicated tie in to the 115 kV EGAT system.
3. Such mills would need to be dispatched by EGAT so as to maintain system stability.
4. Investment costs for interconnection will remain in the range of $100-125 per kW ($2,525-3,150). Interconnection costs decline as a proportion of the total investment costs for the larger export options.

The implications of these findings for short term and marginal investment options[4] are as follows:

1. Interconnection can be carried out at least as quickly as the generation-side and sugar mill investments that will generate the power.
2. The costs of investment for interconnection are small relative to the overall capital requirements for the large scale options.
3. Power supplied by larger (>5 MW) cogenerators will go directly into the EGAT system rather than through PEA. EGAT becomes the focus of the technical and contractual concerns since power will be best inserted at high voltage.
4. Institutional issues such as pricing and contracting loom larger than technical ones with regard to the success of a cogeneration program.

[4] In this report the large scale export options (5-25 MW) are sometimes referred to as "short term." This is because the period in which the investments can be made, 2-4 years, is the short term for an electric utility which normally has a 15-25 year planning cycle.

Financial Feasibility

The final set of finding concerns the financial feasibility of investments in generation by sugar mills. Using recently published proposed tariffs and investment costs calculated by the team's generation and interconnection experts, the following conclusions emerge:

- Non-firm power purchase prices are not sufficient to induce any investments in supply by sugar mills but may induce those with excess capacity to provide power to the EGAT system on a "casual" basis.
- A number of investment options, in sizes ranging from 2.5-25 MW may be attractive for longer term (> 10 years) firm power supply contracts.
- Whenever a mill decides to enlarge or replace its boilers and turbogenerators, the marginal investments to make the plant a supplier to the EGAT system are relatively small. The financial returns from these marginal investments are attractive, assuming the plants do not need to burn oil or other expensive supplemental fuels.
- Sugar mills can purchase bagasse or cane tops/trash at prices that are attractive to suppliers, even relative to such other uses as fiberboard.
- Fuel oil is an unlikely fuel, even for the mills with the greatest efficiencies.

INTERCONNECTION OF SUGAR MILLS TO THE THAILAND ELECTRIC POWER GRID: ISSUES AND PROSPECTS

1.0 BACKGROUND AND INTRODUCTION

1.1 Previous Efforts

The three sections that follow represent the analysis and findings of a four person team of consultants which visited Thailand in November, 1989. The team was supported by USAID to assist the Royal Thai Government in its efforts to create viable policies to promote the cogeneration of electricity for sales to EGAT. The present work builds upon previous efforts by USAID in the Thai sugar sector, most notably those of 1986. The work in 1986 focussed specifically on the supply of biomass fuels - the collection of cane trash and residues - and the economics of continuous operation based on such fuels.

In contrast, the present effort looks specifically at the electrical and generation options for cogeneration and sales to the grid. It is assumed in this study that fuel is available as needed either as bagasse or cane trash. The analytical approach that was taken for the present work is quite similar to that which was used in 1986. However, virtually all of the data that are used on investment costs, performance, and interconnection were generated specifically for this study. Rates of return are calculated based in purchase prices released by the Government's Cogeneration Working Group in July 1990. In addition, the analytical models used to derive the economic and financial results in Section 4 are new.

1.2 Thailand's Electricity Situation

In the early-mid 1980s, Thailand's peak electricity demand was rising at a rate of about 200 MW annually. With total system capacity under 6,000 MW and an ongoing investment program using domestic lignite and gas, EGAT sat on a comfortable reserve margin of as much as 35%.

In the later part of the decade, two events changed the world in which EGAT operates. The first was an extremely rapid growth in peak power demand and the second was the government's decision to have EGAT finance about 65% of its system expansion program from private sources.

At the present time, EGAT has an installed generating capacity of just over 8,000 MW with a peak demand of about 7,300 MW. However, the rapid growth in

Previous Page Blank

power demand, as much as 500-600 MW annually,[1] is expected to reduce reserve margins to perilously low levels in early 1991.[2] EGAT's ability to meet the projected increases in demand by itself is made more complicated by the government's decision to fund only about 35% of the ฿200 billion ($8 billion) generation expansion program. The remainder of the program will need to be funded from other sources. These sources could include:

- Flotation of EGAT shares
- Joint ventures with private/foreign investors (build-own-sell or build-own operate)
- Purchase of power from cogenerators
- Purchase of power from independent power producers

This paper is concerned with cogeneration investment options and the interconnection requirements for such a program.

1.3 Cogeneration Opportunities in the Sugar Industry

The USAID team which studied Thailand's sugar industry in 1986 identified more than 250 MW of installed capacity in that industry. Of that total, about 140-200 MW was thought to be suitable for power export. The latter figure includes only those plants with sufficient current installed capacity (generally above 5 MW) so that no significant investments in generation will be needed. It is clear that much more electricity can be generated if new investments are made.

1.3.1 Generation Options

In the present work, the consultant team looked at four options. The last two options require significant investment in new generation capacity. The first three options assume that the only fuel to be used is bagasse which is made available at the factory. These options are:

[1] It is estimated that current commercial-condominium construction now underway in Bangkok will place an additional peak demand of as much as 200 MW on the MEA system.

[2] Currently under construction or under contract are about 2,100 MW of lignite and gas-fired generating capacity. Timely completion of these projects should just about keep pace with expected increases in demand through 1993. However, this capacity is not expected to add to the systems reserves, leaving the possibility of low reserve margins through the mid-1990s. In early 1990, there was some load shedding in the EGAT system due to high peak demand in the hot season.

1. Immediate term - this option uses existing factory boiler and turbine generator equipment as well as the existing tie line and electrical interconnection equipment. A mill can export as much as 1 MW under this option using surplus boiler and backpressure turbine generator capacity. Investment is required in protective equipment for the PEA system and for the mill and in meters and transformers. Installation time is 6-10 months.
2. Immediate term - This option again relies on existing factory equipment plus a new interconnection transformer at the sugar mill. Additional condensing capability is needed for an export capacity of up to 5 MW. Total investment design and installation would require up to 18 months.
3. Short term - This option includes new steam and turbogenerator equipment and a 22 kV dedicated tie line to the PEA system. This investment program could export up to 10 MW. The design, procurement, and installation would require about 24 months.
4. Medium term - This option is a completely new large high efficiency boiler with requisite turbine generator equipment. The system described in Section 2.1 is sized at 25 MW. The investment cost includes a dedicated tie line to the EGAT 115 kV system since it is beyond the capacity of most PEA substations. This unit is efficient enough to use either residual oil or coal should cane bagasse or residues not be available in sufficient supply. Total elapsed time for design, procurement, and installation is 36 months.

Within options 3 and 4, two "marginal" investment options were considered, 3a and 4a. These cases are identical in size, scope, and export potential to cases 3 and 4. However, the generation expert looked only at the additional investment required for export generation at the 10 and 25 MW levels beyond what new equipment designed solely for sugar production would ordinarily cost. A discussion of these options is presented in Section 4.

1.3.2 Discussion of Generation Options

Although the focus of the report is on interconnection, it is only sensible to examine such options in concert with likely generation side investments. For that reason, the discussion of generation precedes that of interconnection. Each of the four options is presented in detail in Section 2 while specific interconnection issues are covered in Section 3.

The options are laid out in 2.1. For those readers interested in further discussions of generation activities, Section 2.2 goes over the process changes that are required in the following systems for each of the generation options:

1. Boiler heat recovery systems
2. Process evaporators
3. Dilution of cane juices
4. Venting of process steam
5. Steam cycle design

Where bagasse is a valuable resource, the above systems are easily modified so that existing factories can have as much as 30% of total bagasse produced available as surplus. This "surplus" bagasse provides all of the fuel for both the immediate and short term options.

The export capabilities for each of the options is presented in Section 2.3 and is a crucial element in understanding the interconnection costs. A methodology for calculating export capability is presented in 2.4 and is applied in Annex 3 in a case study of three specific mills.

1.3.3 Discussion of Interconnection Issues

A discussion of interconnection issues is given in Section 3. The first two parts of that section are aimed at industry professionals. Discussions of short and long term interconnection issues along with an enumeration of potential problems and issues are presented in Section 3.3-3.6. Detailed cost estimates for each type of export option, *solely for interconnection*, are also shown in Section 3. Annex 4 provides schematics and one line diagrams for each of the export options and is based on the PEA and EGAT substations visited in November, 1989. Each of the mills visited is modeled as well.

1.4 Economic Analysis of Investment and Interconnection Options

A final section of the main report contains a discussion of the economic and financial implications of each of the options discussed in the technical sections. In Section 4 the consultants examine the implications of various contractual arrangements on the feasibility of each of the investment options presented earlier.

The economic and financial scenarios are consistent with the options developed by the generation and interconnection specialists. The economic analysis annex lists the results of the financial and cash flow calculations with regard to different contractual and investment options.

2.0 GENERATION OPTIONS AND CAPITAL COSTS

2.1 Introduction

This section outlines the types of investments that are necessary to export electricity from Thailand's sugar mills. The consultant team's generation expert worked together with the interconnection specialist to devise a set of likely investment options that could suit the types of sugar mills found in Thailand. These options were described above in Section 1.3.1. Case studies of three mills may be found in Annex 3.

The team briefly visited two sugar factories in October, 1989. No direct measurement of process variables was possible since the factories were in their overhaul or off season periods and, therefore, not processing cane. Interviews were held with operating personnel from three sugar factories wherein process variables were obtained. Certain process variables which are critical to estimating export capability, such as quantities of surplus bagasse, boiler flue gas excess air and temperatures, evaporator supply juice densities, and bagasse ash and moisture variability either were not routinely measured or were subjectively reported. This is not unusual for sugar factory operations since their main concern is the efficient processing of cane and sugar, not the generation of electric energy for export.

Predicting the export electric power and energy for a sugar factory requires a detailed analysis of factory operations. Heat balances must be conducted to determine export levels with sufficient precision to substantiate investment decisions. The predictions contained herein were made without benefit of such detailed analyses.

There are, however, a series of typical export electric energy options available to most sugar factories of the types and sizes in Thailand. These are described below.

2.1.1 Option 1

This option takes advantage of existing factory boiler and turbine generator equipment as well as the existing interconnection equipment, including the tie line to PEA's system and the interconnection transformer at the sugar factory. Based on the equipment reported or observed, an export capability of 1,000 kW appears feasible for most factories. Additional electrical protective devices would be required as shown in Section 3.0. Export of electric energy would occur during

factory processing periods only by utilizing surplus boiler and backpressure turbine generator capacity.

This option could be accomplished in the nearest term since it requires only the installation of electrical protective devices, which would require approximately 6 months.

2.1.2. Option 2

This option uses the existing factory boilers, turbine generators and tie line to PEA, plus a new interconnection transformer at the sugar factory. Additional condensing capability has been included since some factories indicated they believe their existing evaporator sets are limited while processing and are under repair during the off season. These factories believe the evaporators cannot be used for the additional condensing associated with power export. A fan-cooled air condenser is included sufficient to accomplish the additional condensing associated with 2,500 kW of power export, however this may be a site-specific requirement. A schematic of the suggested steam system is shown in figure 2.1. The proposed interconnect system is shown in Section 3.0. This option would permit export during both the processing season as well as the off-season up to 5,000 kW. Exporting up to 5,000 kW appears to be the practical limit if the power is to be absorbed into existing 22 kv distribution lines. Larger amounts might disturb the system.

2.1.3 Option 3

This option presumes new steam and turbogenerator equipment, a new interconnection transformer and a dedicated 22 kV tie line from the sugar factory to the nearest PEA substation. In effect, this option builds a new "stand-alone" 5,000 plant and upgrades the electrical interconnection so that 10,000 kW can be exported during the crushing season. The steam and power generation system is shown in figure 2.2.[1] This option would permit export during both the processing season as well as the off season. An export level of 10,000 kW appears to be a practical limit to absorb into PEA's substations without resorting to export from PEA into the EGAT system.

[1] The boiler for this plant can operate more efficiently on heavy fuel oil than on bagasse. The plant can burn oil for some parts of the year when bagasse or cane trash is unavailable. However, the fuel netback value analysis shows that use of fuel oil for extended periods is uneconomical.

2.1.4 Option 4

This option includes a new large boiler; double automatic extracting, condensing, turbogenerator; 30 MVA tie transformer at the sugar factory and a dedicated 115 kv tie line connected to the EGAT system. The steam system is shown in figure 2.3. The interconnect system is shown in Section 3.[2] This system is nominally sized for an export of 25,000 kW. Larger systems may be installed depending on the factory processing capacity.

Fig 2.1. Air Condenser Arrangement for Option 2 (5000 kW Export)

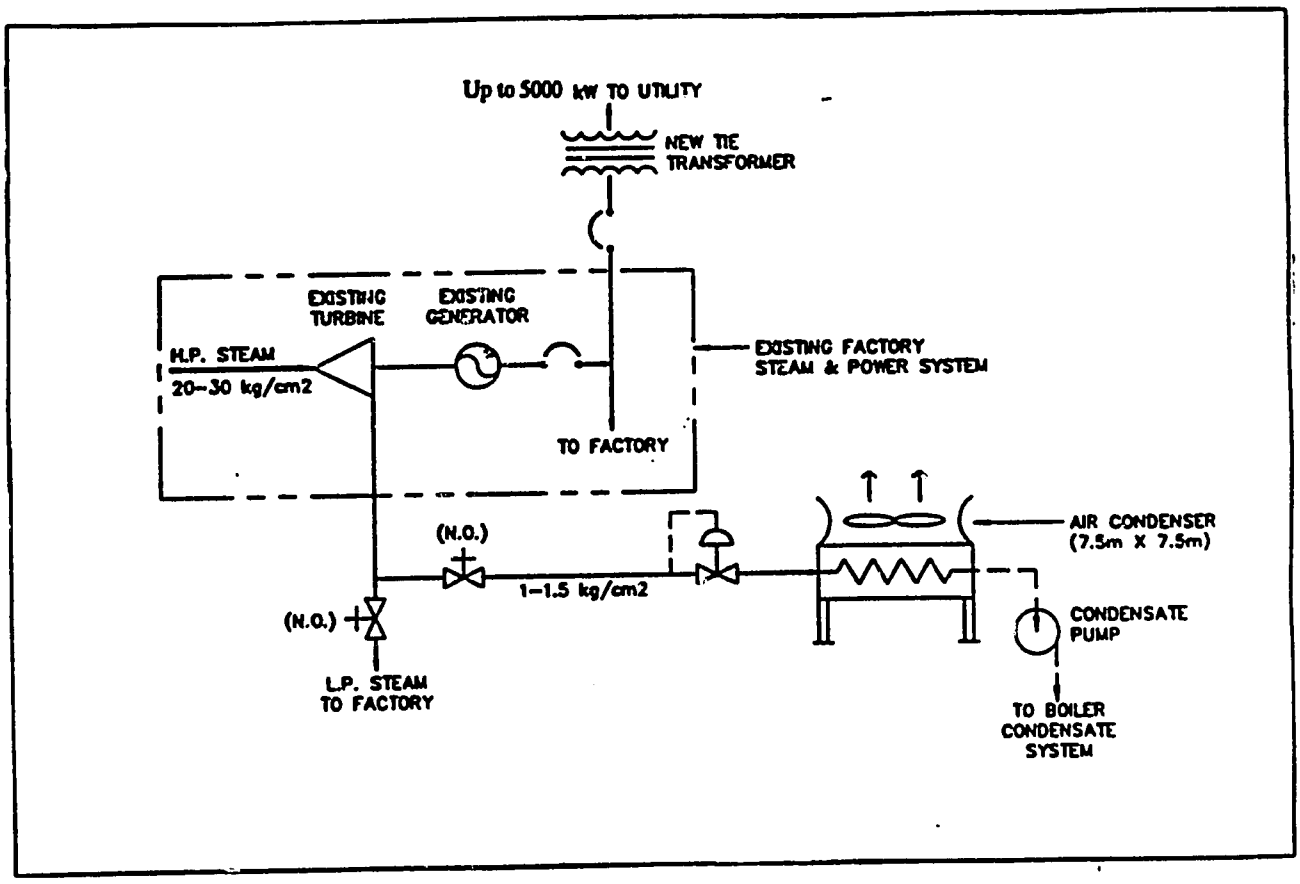

[2] The boiler would be more efficient on fuel oil than bagasse, but as with Option 3, use of fuel oil for extended periods is uneconomical.

Fig 2.2. Typical High Efficiency Steam Cycle - Stand Alone -Option 3 (5000-10,000 kW Export)

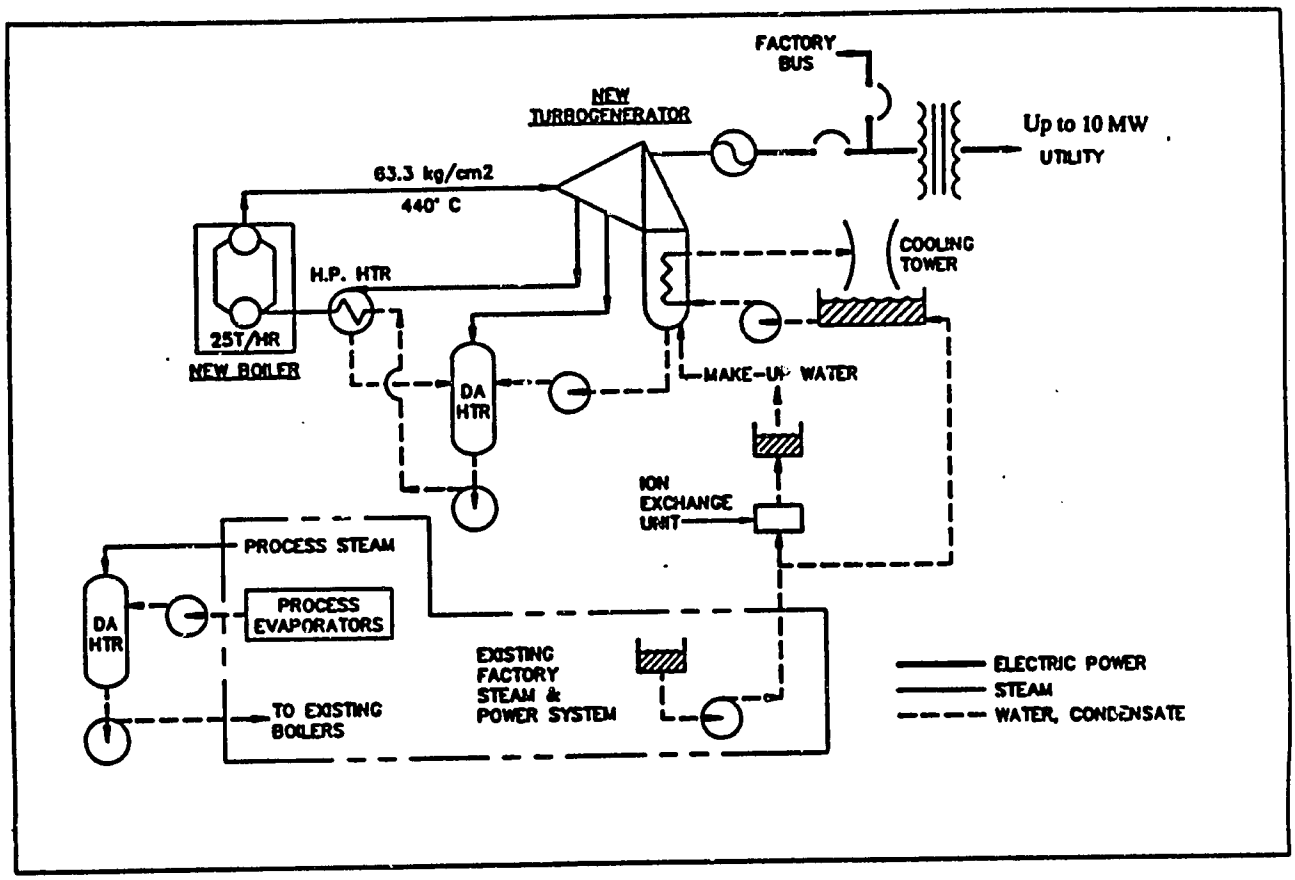

Fig 2.3. Typical High Efficiency Steam Cycle -Option 4 (25,000 kW Export)

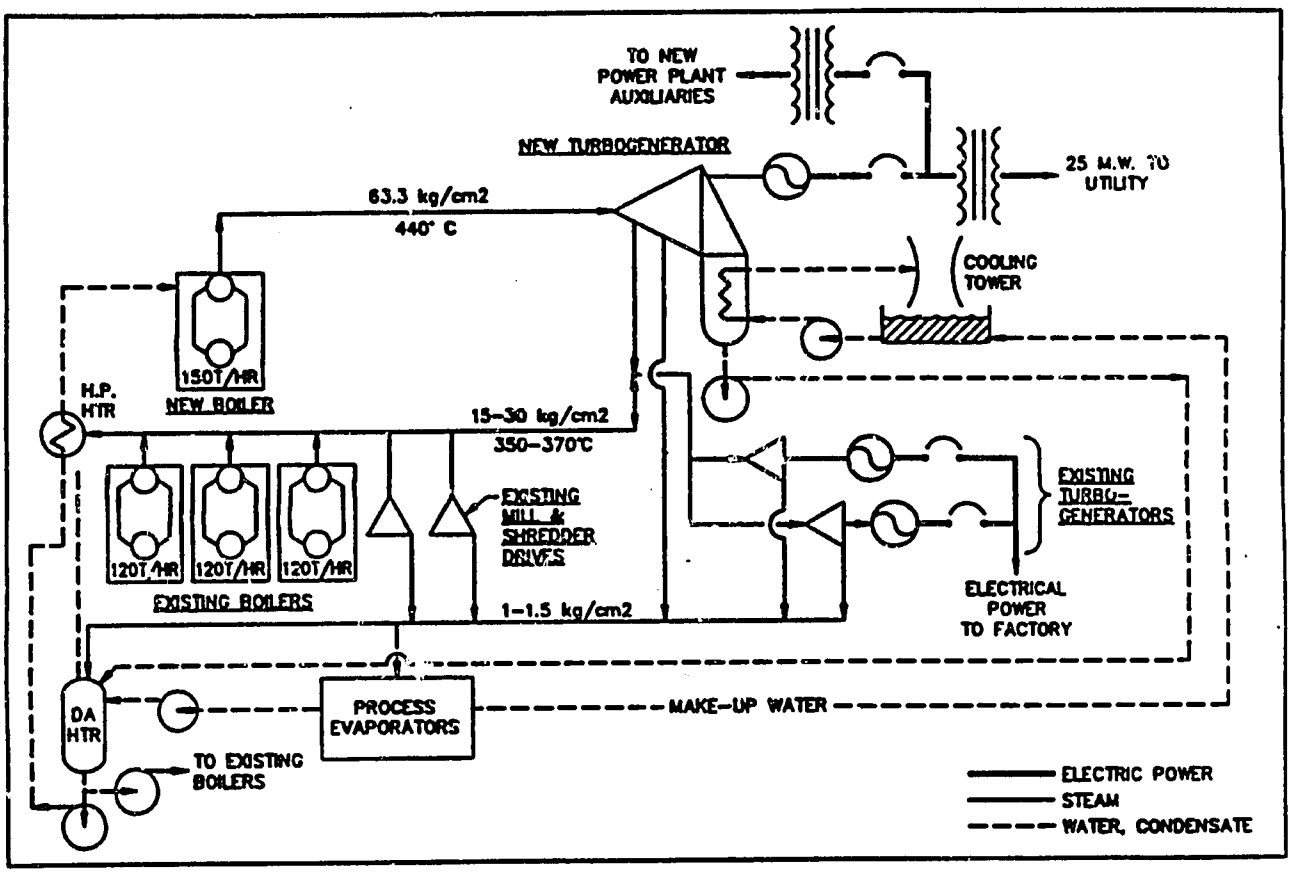

This system could export during both the processing and the off season and would also be reasonably efficient on residual oil or lignite coal.

With this magnitude of export it is doubtful that many of the PEA substations could absorb the peak output at all times, hence the interconnect is presumed to be made at 115 kv into the EGAT system. To some extent this approach may be site-specific since the load profile of the PEA system may, in the case of certain factories, be able to absorb scheduled dispatch of electric energy from such factories. It is not uncommon to dispatch such facilities at load varying from 4:1 (turndown to 25%).

2.1.5 Capital Costs

Table 2.1 indicates the current installed costs for each option and the anticipated time required to design, procure, and install each option.

A range of export capabilities is given for options 2 and 3. For Option 3, the lower level represents the capacity to export during the factory off season with no usage of existing factory power or condensing equipment[3] The higher level represents the tie line capacity and also indicates a level which might be achieved during processing by utilizing the existing power and condensing equipment.

2.2 Processing Changes for Various Options

Sugar factories in Thailand are designed to produce that amount of steam and electric energy needed from bagasse fuel to operate the factory. During the off season, electric energy is purchased from PEA at various levels to support off season maintenance activities. The capacities of the interconnects for the factories are generally limited to 1,000 - 3,000 kW.

No factories reported burning fuel oil to support operations. Sufficient surplus bagasse is stored for start up of the boilers each season and for steam production during brief periods when the process is interrupted or for white sugar refining during the off season.

The sugar factories are essentially "balanced" or even slightly in surplus with regard to bagasse. That is, they produce more bagasse than is consumed for boiler fuel. The amount of surplus bagasse is generally estimated by observation of the

[3] In other words, the plant can operate as a stand-alone facility.

quantity of bagasse stored in huge open air piles. Too little surplus bagasse raises the threat of burning oil to support the process. Too much bagasse can create a major disposal problem.

Table 2.1. Summary Of Installed Costs Of Various Options (US$ x 1000)

Item	Option: / Export Capacity (MW):	1 / 1	2 / 2.5	3 / 10	4 / 25
A.	Boiler & Auxiliaries	0	0	2,455	10,450
B.	Turbogenerator & Piping	0	0	3,617	9575
C.	Cooling System	0	164	674	1,150
D.	Factory Modifications	0	120	390	390
E.	Electrical Interconnections	86	227	223	292
F.	Tie Line Transformer	0	148	398	796
G.	Tie Line	0	0	406	2,154
H.	Design/Proj. Management	24	50	430	1,300
I.	Contingency	10	59	788	2,413
J.	Duty	24	141	2,100	5,600
K.	Total Cost	144	909	11,484	34,120
L.	Design, Procure, Install, (man months)	6	18	24	36

Note: The marginal costs for exporting power are significantly lower than the full installation costs. In the case of Option 3, these costs would total $4.410 million instead of $11.5 million. For Option 4 these costs would total $11.1 million rather than $34.1 million. The major savings are in the first three categories - boiler, turbogenerator, and cooling system.

In general, cane sugar factories control surplus bagasse by the design and operation of their energy producing and consuming devices in the factory. There are a number of ways surplus bagasse can be controlled by modifying one or more of the following variables:

1. Boiler heat recovery systems
2. Process evaporators
3. Dilution of cane juices
4. Venting of process steam
5. Steam cycle design

Where bagasse is treated as a valuable resource, either for fuel or for byproduct usage, all of the above areas offer potential for increasing the quantity of surplus bagasse. Conversely, where bagasse creates a disposal problem, these same areas permit a considerable degree of operational control over surplus bagasse

quantities. Control of these parameters can vary the quantity of surplus bagasse from zero to 30% or more of total bagasse produced.

The Thailand sugar factories studied do not have condensing turbogenerators and therefore lack the ability to generate significant quantities of surplus electric power as a means to control surplus bagasse quantities. Further, the process equipment is designed for high production rates with minimal interruptions at relatively low initial cost.

The various options presented herein require relatively minor changes in process equipment or operation.

2.2.1 Option 1

There are no process equipment changes required in this system. All factories studied had adequate steam and power generation capabilities to produce an export of 1,000 kW periodically or continuously, and to do so without resorting to burning fuel oil. It is necessary to 'force' the existing evaporators to absorb the additional 10 - 20 ton/hour of turbogenerator exhaust steam during periods of export. Alternatively, exhaust steam or first evaporator vapors may be vented, or vacuum pans switched from vapors to exhaust steam, depending on the size and condition of the evaporator system. Since this option is considered to be used only during processing and generally to assist EGAT in meeting peak demands, this option is suggested solely for near term implementation. This option does, however, represent a low cost means to assist in controlling surplus bagasse, provides some additional revenues, and provides a small amount of peaking capacity to EGAT.

2.2.2 Option 2

This option requires that live and exhaust steam systems and the respective condensate system for one boiler and one turbogenerator be isolated from the rest of the factory piping in order to permit isolated operation during the off season. An air condenser is included which could be used both while processing as well as during the off season. This option would have no negative impact on processing capabilities. It would, however, offer a greater means to control surplus bagasse than Option 1.

Expanding the capacity of the air condenser from 1,000 kW (10-20 Ton/Hr) to 5,000 kW (50-100 Ton/Hr) would not be prohibitively expensive. Alternately, the process evaporators may be used to absorb the additional condensing load for export during the off season if provisions can be made for off season maintenance.

There are a variety of ways to provide additional condensing capability other than using the existing evaporators or an air condenser. The use of the existing cooling ponds or some degree of spray pond or cooling tower for cooling using a surface condenser can be considered.

Some factories do not use deaerating feedwater heaters. Installation of a deaerating feedwater heater not only increases condensing capability but improves boiler and steam cycle performance and efficiency.

The specific equipment provided to increase export from 1,000 kW to the 5,000 kW capacity of the proposed interconnect would depend on each particular factory's equipment arrangement as well as the actual quantities of surplus bagasse presently available.

2.2.3 Option 3

A 5,000 kW stand-alone plant, utilizing only bagasse for fuel is the basis for this option. Up to an additional 5,000 kW could be exported during the crushing season. Surplus bagasse is increased by additional flue gas heat recovery devices on each existing boiler coupled with additional control devices to measure and control excess air to a minimum. In factories where no deaerating feedwater heater exists, one would be added to serve all existing boilers. During off season, the surplus bagasse remaining is used to maintain export of electric energy.

The three factories studied had flue gas temperatures ranging from a low of 190°C (374°F) to a high of 250°C (482°F). A target exit gas temperature of 177°C (350°F) can be reasonably obtained with an engineered mix of economizers and air heaters. Excess air reportedly ranged from 30% to 70%, based on measurements of carbon dioxide. There is some question of the validity of these reported readings since carbon dioxide analyzers were found inoperative at the two factories visited. It is not unusual to find flue gas analyzing instruments to be either inoperative or out-of-calibration since they are generally difficult to maintain and calibrate. A target average excess air of 50% is reasonable provided boilers are equipped with air flow measurement and feedback control as well as reliable flue gas analyzers. In-situ oxygen analyzers are recommended for flue gas analysis as they are simpler to maintain than carbon dioxide analyzers and more sensitive in the low excess air ranges.

No change to sugar process equipment is required although some minor modifications in equipment and management practices may yield additional surplus bagasse.

2.2.4 Option 4

Processing changes for Option 4 are similar to Option 3. Some reduction in output from existing boilers can be anticipated depending on the size of existing equipment and the new equipment selected for export purposes.

This option, which involves a single high pressure, high temperature boiler, can be expanded to completely displace all existing boilers and turbogenerators. This would be advisable in the event a new factory is constructed or a relocation of a factory is planned. In such a case, a factory which normally consumes 300 Ton/Hr of steam would produce 25,000 kW from the high pressure section of the turbogenerator alone at an extremely low heat rate (5,000 BTU/kW hr) while processing.

2.3 Range of Export Capabilities for Various Options

As has been stated previously, each factory is unique. Processing rate, total tons of cane processed, cane quality and equipment arrangements dramatically affect the amount of bagasse energy available for producing electric energy for export. For purposes of this investigation a range of export is given for general guidance only. This range represents the capabilities of plants which process less than 1,000,000 tons per year of cane up to plants which process 2,000,000 tons of cane. Exact predictions of export capabilities can only be achieved following an in-depth investigation of individual factory equipment, operations, and heat balances.

Table 2.2 summarizes those probable ranges of export power and energy for each option, utilizing existing supplies of bagasse.

From Table 2.2, it can be concluded that burning of oil in existing boilers (Options 1 and 2) is prohibitive except under extreme emergencies. Additionally, the export of electric energy from bagasse during the off season in those factories with high heat rates makes sense only if there is no alternate market of higher value. These are factories where the boiler steam pressures are 15 kg/cm^2 or less.

Table 2.2. Ranges of Export Options for Power and Energy

	Option 1	Option 2	Option 3	Option 4
Cane Processed, Ton/Yr (x 10^6)	0.8 - 2.0	0.8 - 2.0	0.8 - 2.0	0.8 - 2.0
Avg Net Export While Processing, MW	1	1 - 3.9	5 - 10	20 - 25
Avg Net Export Off Season, MW	0	0.66 - 3.9	5 - 10	20 - 25
Net Export Annual, kWh/Yr (x 10^3)	3,775	6,938 - 26,325	19,734 - 56,875	109,500 - 164,250
Bagasse Consumed for Export, Ton/Yr	12,000	40,000	46,000 - 93,240	78,000 - 136,731
NPHR-Bagasse-Grinding (x 10^3)	27.5 - 40	27.5 - 40	20	16
NPHR-Bagasse-Off Season (x 10^3)	40 - 80	40 - 80	20	16
NPHR-Oil-Off Season (x 10^3)	30 - 60	30 - 60	14	13

Note: NPHR = Net Plant Heat Rate, BTU/kWh.

2.4 Recommended Methodology for Determining the Export Capability of Each Investment Option

Predicting the magnitude of export capability for each factory requires that the factory steam and electric system be initially modeled to reflect current equipment and current operation as closely as possible. The modeling follows standard procedures used throughout the sugar industry.

It is important in preparing the initial model to represent a typical production year using typical cane processing rates and process parameters. A field visit while processing is necessary not only to check and verify recorded parameters but also to understand normal operating practices for such activities as refining, responding to unexpected process interruptions, and cleaning evaporators.

The initial model should be prepared in the field, immediately following the field visit, to check the model against actual operations and correct any discrepancies. The model can then be modified to predict export capability.

2.4.1 Option 1

Modify the initial model by increasing the throttle flow to one or more turbogenerators to increase electric energy generation by 1,000 kW. Increase dilution of clarified juice to condense additional steam through the evaporators and check to see that heat transfer rates on evaporators are within normal guidelines. Calculate annual surplus bagasse remaining during processing. In the event the model shows more bagasse consumed than produced, iterate electricity export downward until surplus bagasse at the end of processing is zero or that amount required for off season refining.

The goal of the Option 1 model is to consume all surplus bagasse while processing up to the limit of the existing intertie transformer, which would normally be 1,000 kW.

2.4.2 Option 2

Where factories have considerable surplus bagasse and where use of process evaporators during the off season is not possible, modify the model by increasing main steam production as in Option 1. Consume all excess bagasse at a fixed export level for 11 months/year, allowing a one month outage for maintenance on the power generation equipment which is required during the off season. Do not increase dilution or in other ways modify boiling operation. Utilize the air condenser to condense the additional steam required for export. An "off season", straight-condensing sub-model is required.

The goal of this option is to consume all surplus bagasse over an 11 month period.

2.4.3 Option 3

Recalculate existing boiler efficiencies based on 50% excess air, 177°C exit gas temperature.

Modify the initial model to predict surplus bagasse resulting from improved boiler efficiency and any other process modifications uncovered in the field investigation (i.e. venting of steam, clarified juice dilution, etc.) that can reduce factory energy requirements.

Prepare sub-model for the proposed stand alone boiler/turbogenerator and input various export loads until all surplus bagasse is consumed over an 11 month period. It may be necessary to remodel using lower boiler efficiencies for existing boilers if export is found to be greater than 10,000 kW during the crushing season as may be the case for some large factories.

The goal of this option is to consume all surplus bagasse in 11 months.

2.4.4 Option 4

Modify the initial model to include revised boiler efficiencies as in Option 3. Add any realignment of boiling systems to reduce low pressure steam consumption to a minimum. Reduce or eliminate all venting, use of pressure reducing valves, excess dilution, non-essential use of auxiliary hand valves on mechanical drive steam turbines. Include a double- automatic extracting/condensing turbogenerator and a high pressure - high temperature boiler, deaerating feedwater heater and high pressure feedwater heater. Send all exhaust steam condensate from evaporators to deaerating heater. Recover boiler blowdown and steam trap flash energy to low pressure steam system.

Establish the maximum bagasse storage capacity for off season usage. Run the model at various export levels during the season so that this quantity of surplus bagasse remain at the end of the season. Under Option 4, the system could be sized to consume all surplus bagasse or a mixture of bagasse and other fuels during the off-season.

2.4.5 Other Iterations of the Model

With the above mentioned models, it is possible to predict various combinations of export levels including firm energy intended to address EGAT's load curve as well as the burning of oil or lignite to meet unusual conditions.

It is also possible to size Option 4 large enough to consume all bagasse as it is produced and to burn other fuels during the off season.

In the case of a new or relocated factory, it is also possible to size Option 4 to meet steam required while processing.

3.0 ELECTRICAL INTERCONNECTION ISSUES

3.1 Introduction: General Issues

Interconnection of electrical service for export of excess power generated by utility company customers requires mutual agreement by the parties involved - the generator, the purchasing utility, and possibly the distribution utility. On the utility side, this will generally be the generation/transmission company, EGAT, or the distribution company, PEA. Such agreement must be clearly understood by both parties so that they will cooperate with each other and thereby meet their respective objectives and their contractual obligations.

What follows is an outline of routine procedures for implementing interconnection. These procedures provide the basis for agreement between the cogenerator and the utility company. Consequently, it may be used as a checklist of the steps toward arriving at a system for exporting power to the utility company.

3.1.1 Purchase Rates

A first step in reaching agreement with a utility is determining appropriate rates.[1] These rates must cover the following areas: a) Energy; b) Demand; c)Power Factor.

Normally, a power purchase contract will contain a power factor figure in kilovar-hours. If the delivery of kilovar-hours is less than agreed upon, then the utility incurs costs due to line losses and voltage drops.[2] In contrast, if the kilovar-hours delivered are in excess of what was contractually require then the utility will

[1] This subject is covered in greater detail in Section 5.

[2] Although reactive power (vars) is not directly related to energy (watt-hours), it is a component of total power (volt-amperes) relative to the current (amperes), and therefore has an effect on line losses, voltage regulation and generator capacity. The following equations make this clear:

$$(\text{Volt-Amperes})^2 = (\text{Watts})^2 + (\text{Vars})^2$$
$$\text{Amperes} = (\text{Volt-Amperes})/3 \times (\text{Volts})_{L\text{-}N}$$
$$\text{Losses} = (\text{Amperes})^2 \times \text{Resistance}$$
$$\text{Voltage Drop} = \text{Amperes} \times \text{Impedance}$$

Previous Page Blank

face a smaller line loss and voltage drop. Adjustment for power factor should be based on kilovar-hours in excess (or deficit) of the amount required to arrive at the ratio to kilowatt-hours corresponding to the power factor at which power shall be delivered.

3.1.2 Interconnect Cost

Responsibility for costs on both sides of the interconnection point should be established separately from the responsibilities for the design and installation. For example, installation costs for equipment to protect other utility customers which would otherwise not be required should be borne by the power exporter, even though the utility company would be responsible for the design and installation of such equipment.

3.1.3 Design and Review Process

The responsibilities for design and review of the interconnect facility should be established. This will minimize controversy over the performance of both parties in accomplishing the necessary work to finalize the actual interconnection of the systems for exporting power to the utility.

Generally, the point of interconnection establishes the design boundary for each party, except for revenue metering, which almost always remains the responsibility of the utility. Review of the other party's design should be scheduled at appropriate phases so that the designs for the interconnection are coordinated to complement each other.

3.1.4 System Characteristics

System characteristics should be carefully evaluated to insure the system installed permits the intended operation in all respects. This matter is critical and requires understanding of design requirements for the following three items:

1. Voltage rating of equipment, in particular transformer ratios, taps and requirements for load tap changing.
2. Insulation coordination, i.e. basic insulation level and lightning arrester rating.
3. System grounding, from the point of maintaining an effectively grounded system in the situation when the utility supply becomes disconnected and other customers remain connected to the cogeneration supply. This means that sugar factories with existing transformers with delta connected high voltage windings which were appropriate for purchasing

power only may now be required to have transformers with solidly grounded primary windings.

In each mill, there will be some unique features of the generation and export situation. Mills that export only during the milling season will require attention to the tie transformer ratios. The tie transformers will be stepping-up large amounts of power during export. Thus the high voltage to low voltage winding ratio may need to rise to compensate for the voltage drop through the transformer. However, during the off season, power may need to be imported by the mill with a consequent need to reduce the high voltage to low voltage winding ratio in order to raise the voltage on the factory side of the transformer.

With regard to the tie line, the insulators and lightning arresters must carry the appropriate rating in order to avoid nuisance trips. These trips may arise because of flashovers which result from the connection of generators to the system through ungrounded tie transformers.

3.1.5 System Arrangement

Arrangement of interconnection circuits must be evaluated to maintain system reliability, redundancy and expandability.

3.1.6 Protective Relaying Philosophy

The protective relaying schemes should be carefully evaluated to maintain system integrity during faults. Current, voltage, frequency and power flow responses to faults should be analyzed to select the proper relay settings to isolate faults and protect equipment from damage.

3.1.7 Operating Procedures

Operating procedures for exporting power must be established so that the operation of the system can be maintained reliably, thereby avoiding outages and damage due to improper procedures. Before attempting interconnection, operators should make sure that conditions are normal and that the tie-in to the utility system can be accomplished successfully. After interconnection, operators should be thoroughly familiar with both normal and abnormal conditions in the system and with the appropriate measures to account for abnormal conditions, including disconnection from the utility system. Both power and voltage fluctuations and frequency excursions may be either normal or abnormal depending on the amount of the fluctuation and the time of day. Operators will need to be trained in the differences between normal fluctuations and abnormal variations in these factors. In order to make sure that the generation plant is operating correctly with respect to

the rest of the system, operators must be instructed and trained to perform the following tasks:

- Synchronizing
- Increasing and decreasing power output
- Coordinating operation with utility company dispatchers through appropriate communication channels

3.1.8 Instruction and Training

Before the system can be put into operation, operators must be fully instructed and trained in the operational requirements. It is important that instruction cover the basic principles of the following subjects so that operators can anticipate conditions and take appropriate action:

a. Generation

b. Excitation

c. Isochronous operation

d. Parallel operation

e. Load flow

f. Power factor

3.2 Interconnection Equipment

The interconnection equipment requires additional metering devices, protective relays and where not provided, synchronizing equipment. (See Annex 4.1). Depending on the export capacity desired, additional transformer and line capacities may have to be added.

3.2.1 Metering

Basic metering will involve one set for import and one set for export. Under cases where metering must be performed for a wide range of power (which can occur where the amount exported will be many times greater than the amount purchased), appropriate current transformer ratios and service factors and/or metering devices must be utilized.

3.2.2 Protective Relays

Additional protective relays must be provided to protect the utility system and the sugar factory generating equipment during parallel operation. Generators will now be subjected to utility company conditions and must be protected against reverse power, negative sequence currents due to unbalanced phase currents and loss of excitation (reverse vars).

3.2.3 Synchronizing Equipment

It is recommended that synchronizing equipment include a synchronizing check relay to prevent operator error and mis-synchronizing with rapid changes in frequency during attempts to synchronize.

3.2.4 Tie Transformer

The tie transformer must be correctly sized to be able to export the total available capacity with sufficient extra capacity to tolerate power swings. Also important are the voltage ratings on both the high voltage side and the low voltage side. Voltage ratings should take into account the voltage drop through the transformer and the voltage variation of the utility system. It may be necessary to provide tap changing under load capabilities where regulation requirements cannot be met. Winding connection must also be determined to allow grounding as required. Impedance of the transformer should be evaluated relative to regulation requirements and for limiting short circuit.

3.2.5 Grounding Transformer

It may be necessary to provide a grounding transformer for maintaining effectiveness of grounding for insulation requirements and for ground fault relaying. Requirements will be dictated by the winding connections provided for the tie transformer and the grounding method for the generators.

3.2.6 Tie Line Controller

A tie line controller will greatly assist in regulating the export of power. Power swings will occur with changes in utility frequency, changes in terminal voltage due to utility load changes and changes in plant loading. A tie line controller will compare the output power against the setting and adjust the generator output accordingly.

3.3 Implementation of Interconnections

How long it will take to interconnect cane factories with the grid depends on the equipment already provided at the plants and the amount of power capacity desired. All plants appear to have at least 1500 kVA tie transformer capacity presently utilized only for off-season power and start-up. Implementation time for additional capacity depends on delivery time for major equipment such as circuit breakers and transformers, which may be as long as ten months after the order is placed. For systems with dedicated lines, implementation time also depends on the installation time for high voltage transmission lines.

3.3.1 Short Term Interconnection

For the short term interconnection, the existing transformer may be utilized with minimum provision for metering and protection during operation. Equipment required should be available from the utility companies or available from manufacturers' stock if not available locally. Refer to Table 3.1 for electrical capital cost estimates and Annex 4.1 for the electrical schematic.

3.3.2 Long Term Interconnection

Long term interconnection may be classified into three groups:

1. The first group involves providing a new tie transformer to provide a capacity to export between 1 to 5 MW. The existing 22 kV line is expected to be utilized and a tie line controller provided to regulate power export during grinding and during the off-season. Refer to Table 3.2 for electrical capital cost estimate and Annex 4.1 for the electrical schematic.
2. The second group involves providing additional generating capacity for 5 to 10 MW continuous export to utilize surplus bagasse. In addition to the investments required for the smaller plant, this option will involve providing a new tie transformer and installing a dedicated 22 kV line to the PEA switching station. Process changes are expected to be minimal. Refer to Table 3.3 for electrical capital cost estimate and Annex 4.1 for the electrical schematic.
3. The third group involves providing additional generating capacity for more than 10 MW continuous export and improved conversion efficiency. The tie transformer will require tap changing under load equipment and the transmission line will be 115 kV running to the EGAT substation. Factory process changes are expected to be substantial, considering the existing systems were designed and installed

to handle the operating load of the plant only, and since there was no benefit to provide extra capacity other than for foreseeable plant or process expansion. Refer to Table 3.4 for details on capital costs and the types of equipment and issues that are involved in making long term interconnection for systems exceeding 10 MW. Refer to Annex 4.1 for the electrical schematic.

3.4 Conditions for Feasibility

Technical and economic feasibility cannot be established a priori. Each plant will be different in terms of its location vis-à-vis the grid, and its abilities to export power and energy. The following factors should be evaluated by the utility and/or the cogenerator in the design analysis to determine the adequacy of existing installations and the results of any equipment and operational changes.

Table 3.1. Capital Cost: Typical Short Term Interconnection - Up to 1 MW

ITEM	QTY	UNIT	MAT'L	LABOR	TOTAL
Watthour Demand Meter	1	EA	$ 1,200	$ 50	$ 1,250
Varhour Meter	1	EA	1,400	50	1,450
Potential Transformers	2	EA	1,500	100	1,600
Blocking Relay (Dev. 68)	1	EA	250	50	300
Synch Check Relay (Dev. 25)	1	EA	5,200	100	5,300
Voltmeter	2	EA	1,200	100	1,300
Synchroscope	1	EA	1,400	100	1,500
Voltage Relay (Dev. 27/59)	1	EA	900	50	950
Undervoltage Relay (Dev. 27)	1	EA	250	50	300
Frequency Meter	2	EA	3,000	100	3,100
Wattmeter	1	EA	1,500	50	1,550
Varmeter	1	EA	1,800	50	1,850
Control Switch	1	EA	400	50	450
Negative Sequence Relay (Dev. 46)	1	EA	2,500	50	2,550
Loss of Excitation Relay (Dev. 40)	1	EA	1,500	50	1,550
	Subtotal		$24,000	$1,000	$25,000
22 kV Circuit Breaker & SW	1	EA	32,500	500	33,000
Lightning Arresters	3	EA	4,500	300	4,800
Overcurrent Relays	Lot	LS	19,000	1,000	20,000
Ground Fault Relay	1	EA	1,000	200	1,200
	Subtotal		$57,000	$2,000	$59,000
	Total		$81,000	$3,000	$84,000

Notes: 1. Estimated cost in U.S. dollars ($1.00 = ฿25.725). 2. Material cost at U.S. prices. 3. Labor cost at Thailand prices.

Table 3.2. Capital Cost: Typical Long Term Interconnection - 1 to 5 MW

ITEM	QTY	UNIT	MAT'L	LABOR	TOTAL
3.3/6.6 kV Switchgear	1	EA	$100,000	$4,000	$104,000
Metering & Relaying	Lot	LS	24,000	1,000	25,000
Recording Meter (Watt & VAR)	1	EA	5,000	200	5,200
Grounding Transformer & Resistor	1	EA	12,000	400	12,400
Transducers (Watt & VAR)	2	EA	3,000	100	3,100
Tie Line Controller	1	EA	9,000	1,000	10,000
Cabling, 6.25 MVA @ 3.3 kV	100	LF	6,000	300	6,300
22 kV Ckt Bkr & Relays	1	EA	57,000	2,000	59,000
	Subtotal		$216,000	$9,000	$225,000
Tie Transformer	6.25	MVA	125,000	3,000	128,000
	Subtotal		$125,000	$3,000	$128,000
	Total		$341,000	$12,000	$353,000

Notes: 1. Estimated cost in U.S. dollars ($1.00 = ฿25.75). 2. Material cost at U.S. prices. 3. Labor cost at Thailand prices. 4. 3.3/6.6 kV switchgear and transformer may not be required if existing plant equipment can be utilized. 5. Grounding transformer and resistor recommended for grounding with delta connected secondary tie transformer.

Table 3.3. Capital Cost: Typical Long Term Interconnection - 5 to 10 MW

ITEM	QTY	UNIT	MAT'L	LABOR	TOTAL
11 kV Switchgear	1	EA	$100,000	$4,200	$104,200
Metering & Relaying	Lot	LS	21,600	800	22,400
Recording Meter (Watt & Var)	1	EA	5,000	200	5,200
Grounding Transformer & Resistor	1	EA	12,000	400	12,400
Transducers (Watt & VAR)	2	EA	3,000	100	3,100
Tie Line Controller	1	EA	9,000	1,000	10,000
Cabling, 12.5 MVA @ 11 kV	100	LF	4,400	300	4,700
22 kV Ckt Bkr & Relays	1	EA	57,000	$2,000	59,000
	Subtotal		$212,000	$9,000	$221,000
Tie Transformer with LTC	12.5	MVA	350,000	8,000	358,000
	Subtotal		$350,000	$8,000	$358,000
22 kV Tie Line	20	KM	320,000	20,000	340,000
22 kV Circuit Breaker	1	EA	32,500	500	33,000
Overcurrent Relays	4	EA	5,600	500	6,100
Meters & Indicators	Lot	LS	11,400	700	12,100
Lightning Arresters	3	EA	4,500	300	4,800
	Subtotal		$374,000	$22,000	$396,000
	Total		$936,000	$39,000	$975,000

Notes: 1. Estimated cost in U.S. dollars ($1.00 = ฿25.75). 2. Material cost at U.S. prices. 3. Labor cost at Thailand prices. 4. 11 kV switchgear cost may not be reduced by 50% if existing main breaker can be utilized. 5. Tie transformer cost may be reduced by 28% if LTC is determined not to be required.

Table 3.4. Capital Cost: Typical Long Term Interconnection - More than 10 MW

ITEM	QTY	UNIT	MAT'L	LABOR	TOTAL
11 kV Switchgear	1	EA	$100,000	$4,200	$104,200
Metering & Relaying	Lot	LS	21,600	800	22,400
Recording Meter (Watt & VAR)	1	EA	5,000	200	5,200
Grounding Transformer & Resistor	1	EA	12,000	400	12,400
Transducers (Watt & VAR)	2	EA	3,000	100	3,100
Tie Line Controller	1	EA	9,000	1,000	10,000
Cabling, 30 MVA @ 11 kV	100	LF	8,800	600	9,400
115 kV Circuit Breaker & Relays	1	EA	120,600	2,700	123,300
	Subtotal		$280,000	$10,000	$290,000
Tie Transformer with LTC	30	MVA	840,000	16,000	856,000
	Subtotal		$840,000	$16,000	$856,000
115 kV Tie Line	20	KM	1,900,000	100,000	2,000,000
115 kV Circuit Breaker	2	EA	85,000	1,000	86,000
Distance Relays	2	EA	31,400	600	32,000
Lightning Arresters	3	EA	15,600	400	16,000
	Subtotal		$2,032,000	$102,000	$2,134,000
	Total		$3,152,000	$128,000	$3,280,000

Notes: 1. Estimated cost in U.S. dollars ($1.00 = B25.75). 2. Material cost at U.S. prices. 3. Labor cost at Thailand prices.

3.4.1 Capacity of System

It will be necessary to check the capacity of all equipment for continuous and short time ratings against probable conditions. These include voltage, current let through and interrupting ratings.

3.4.2 Performance of System

This can be established by simulating maximum import and export conditions. The engineers can then determine if resulting voltages impose any operating problems at the plant and/or to other utility company customers.

3.4.3 Arrangement of System

Engineers should analyze utility system arrangement for conditions during utility outages when the cogenerator supply remains connected to the utility system.

3.5 Anticipated Problems

Any project can be adversely affected by problems arising out of conditions not taken into consideration during the planning phase. The following items can all have an impact on the installation schedule, construction and operation of the system.

1. Availability of equipment
2. Delivery of equipment
3. Engineering and design support
4. Site conditions, including available space, obstructions, soil conditions, seismic conditions and atmospheric conditions
5. Climatic changes
6. Operation conditions
7. Maintenance practices
8. Availability of labor
9. Competence of operating personnel
10. Management goals

In the present case, the time required for delivery and installation of equipment is a major obstacle to the immediate term export of power to the grid.

Proper training of operating personnel on both the utility side and the exporter's side cannot be overemphasized. Each side must understand each other so that communication can be effective. This means knowledge of the subject matter, including the terms and expressions relative to the actions required by each side.

3.6 Relevance for Prospective Cogenerators

The items discussed above apply equally to prospective cogenerators in other industries. However, requirements for cogenerators using induction machines are not as stringent. Induction machines will normally require excitation by the utility system and must only address the consumption of vars. Consumption of vars becomes undesirable to the utility company when found at the end of long distribution and transmission systems because of line loss and voltage regulation problems. Such considerations are of particular relevance to sugar mills, many of which are located in rural areas.

4.0 ECONOMIC ISSUES

4.1 Introduction

Although the focus of this work was on the mechanics of the electrical interconnection, economic questions invariably loom large. On the supply side (the sugar mills), the three main question involve:

1. Investment costs
2. Fuel costs
3. Returns on investment

For the utility, there are two major economic issues. These are the level and structure of the purchase prices, and the stability and management of the distribution grid in the areas where power will be exported to the system.

The power purchaser, in this case, PEA or EGAT naturally wants to have control over dispatch. This means that the owner of the power generating unit must allow the total number of hours of power sales to be determined by EGAT or PEA (within the limits of the contractual framework). This has several implications. First, it rules out the type of casual or occasional power sales that many factories might prefer. Second, it places most of the financial risk onto the generator. Third, it imposes costs on the generator in terms of staffing and equipment in return for the higher prices that may accompany centralized dispatch.

From the utility company's point of view, control over dispatch is crucial to the job of running a reliable and cost-minimizing electric power system. Several factors influence the utility's desire to control dispatch:

- The costs of other generating units in the system owned by EGAT may vary throughout the year. This is especially true in the case of hydro but will also apply to some extent to generating units that consume fuel oil.[1]

[1] This has to do with the economics of seasonal demands for various fuels and the responses of the refining system to those changes in demand. The availability, and therefore the price, of heavy fuel oil will vary from one season to another as a result of these refining changes.

- The utility must be able to schedule maintenance around its least cost generation program to make sure that there is sufficient reserve power in the peak demand periods.
- The utility will need assurance that a non-utility source will be available when it is needed regardless of the processing situation at the sugar mill itself.

For the generators, there are several financial implications of dispatch coming from the purchaser. These are:

- Uncertainty about the number of hours which will be purchased in any given month
- Competition with the utility's own generation units, especially hydro, during periods favorable to the utility's own facilities
- Calls on the mill to give priority to electricity production during the sugar milling season

Each one of these factors is reasonable and can be covered in an appropriate contract. However, one of the net results of the utility gaining control over dispatch is that the uncertainty may be borne to an additional degree by the generator.

In the text that follows, the first subsection deals with the generation side issues. The next subsection is concerned with purchase price issues and the resultant returns on investment for the congenerators.

4.2 Generation Costs

In Table 2.1 (see Section 2.1), detailed cost estimates were given for the four major generation options. Using those cost estimates, the consultant team's economist was able to estimate the likely generation costs under a variety of investment and plant utilization scenarios. There are three major elements of generating cost:

1. Investment in boilers and turbogenerators
2. Rate of utilization of the plant
3. Fuel costs, which consist of the purchase price of the fuel as well as the net heat rate (fuel consumption per kWh) of the power plant

Interest rates may have an important impact on generation costs for some of the more sizable options which involve new plant and equipment. In addition, the

availability of feedstocks for fuel may prove an important issue when it comes to whether an investor will go forward.[2] In this study, we have simply assumed that the required volumes of fuel will be available at a price that is sufficient to ensure their supply.[3]

4.2.1 Investment Requirements

There are essentially two approaches to using the power production of a sugar mill for export. First, the mill can simply use its existing equipment, possibly with minor modifications. Second, the mill can invest in new boilers and turbogenerators, specifically intended to supply power at high reliability and efficiency.

The first approach can be implemented within one year, a period referred to as the immediate term. Investment in new plant and equipment takes longer, 18-36 months, and is referred to as the short term. Options 1 and 2, described in Section 2.1, are both immediate term options. Options 3 and 4 are short-medium term options, involving greater investment and power output.

- Option 1 simply produces a surplus of 1 MW continuously during the grinding season. No process changes are made nor is there any modification to the boilers and tubogenerators.
- Option 2 requires isolation of the exhaust steam and condensate systems for one boiler and turbogenerator unit. The modification is intended to permit the export of up to 5 MW of power during both the processing and off seasons.
- Option 3 concerns upgrading the interconnection to 10 MW and an investment in a new 5 MW boiler and turbogenerator, using only bagasse for operation throughout the year. Considerable changes might be required in some factory operations.
- Option 4 involves the addition or replacement of the existing boilers with a single high pressure, high capacity boiler and turbogenerator. The

---

[2] This issue may be locally important if a sugar mill is relatively isolated or if there are a number of competitors for the sugar mill's bagasse. These might include fiberboard or pulp mills.

[3] Another project, supported by USAID, has investigated the feasibility of gathering the cane trash and leaves to use as fuel for power generation. The project concluded that the costs of delivering cane trash to a sugar mill were competitive with coal and much less expensive than heavy fuel oil.

system would permit the use of surplus bagasse or fuel oil, if necessary, to maintain continuous output of 25 MW throughout the year.

For both of the larger investments, Options 3 and 4, there exists the possibility of making the electricity export investments concurrently with mill modernization, expansion or relocation. Naturally, these costs are marginal to the costs that the plant will have in any event. They are discussed below as Options 3a and 4a.

Option 1

This investment is designed to export electricity only during the grinding season. It is low efficiency (60,000-80,000 BTU per kWh) and will consume all of a mill's surplus bagasse during the grinding season. A typical plant configuration, designed to export 1MW during the grinding season, has the investment and operating costs that are shown in Table 4.1.

Table 4.1. Option 1: Investment Costs and Operational Parameters

		Baht	$
Investment (1 MW)			
Mechanical (includes plant modifications)		1,500,000	59,000
Electrical (Includes metering and switchgear)		3,700,000	86,000
Generating Costs (per kWh)			
Fuel	@ $2/tonne (B50)	0.198	0.008
	@ $4/tonne (B00)	0.397	0.016
	@ $6/tonne (B150)	0.595	0.024
Capital Charges	@ 25% plant factor	0.297	0.012
	@ 15% plant factor	0.461	0.018
	@ 10% plant factor	0.698	0.028
Total Costs (per kWh)			
Low		0.495	0.02
Medium		0.858	0.034
High		1.293	0.052

Note: The base case assumption includes a 10% interest rate and a 20% return for the equity portion of the investment. No use of cane tops or trash is assumed, and the heat rate for the boiler is assumed to range from 27,500-40,000 BTU/kWh during the grinding season and approximately 80,000 BTU/kWh in the off season.

The total investment, B3.7 M ($145 k), is just a fraction of the cost of new generating capacity. However, the low investment cost is tempered by two

considerations. First, the fuel consumption is high. Second, the plant has a low utilization rate, certainly less than 25%,[4] compared with the 60% or more that EGAT's large new facilities show. A small investment amortized over a small output can still be expensive relative to EGAT's facilities. In general plant factors below 10-15% turn out to be uncompetitive relative to EGAT's costs. However, if the plant is used, more than 20% of the total year, its net capital costs turn out to be quite low (see the 25% utilization case). Thus, low utilization of the plant corresponds with high costs. Conversely, high utilization corresponds with low capital costs.

Table 4.1 shows the capital costs of generation for Option 1. The High, Medium, and Low categories combine fuel and capital costs.

The Table shows that at low utilization rates (10%), the 1 MW plant opting for immediate export will have capital charges of about ß0.7 per kWh. When combined with the low thermal efficiency of the boiler and turbogenerators in such a mill, the overall costs of generation could go as high as ß1.2 per kWh (see Table 4.1). At the operating efficiencies typical of such mills and with bagasse valued at ß100/tonne ($4/tonne), the cost of fuel comes to roughly ß0.4 per kWh.

With low investment in the mill's generation system, the costs of interconnection dominate the total investment charge. Figure 4.1 shows the total generation cost from the three cases examined in Option 1. These are coupled with the other immediate term alternative, Option 2, for slightly larger power export capacity. Figure 4.2 shows how large a fraction of total investment costs are taken up by the interconnection equipment and installation. It is instructive to look at how these costs vary by option as a proportion of the total investment.

Option 2

This generation choice requires that the mill make a greater investment in its internal generation system. In addition, there will be some modifications of plant operations to accommodate the greater net export of power, up to 5 MW. Investment requirements will vary somewhat depending on how the factory decides to practice the necessary additional condensing capacity. In comparison to the first option, both the mechanical and electrical investments are far greater. However, the investment is expected to be amortized over a greater operating year. In an

[4] This figure refers to the proportion of the total hours in a year that the plant is operating. Thus a 25% utilization rate means that the plant operates 2190 hours (i.e., 0.25 x 8760).

Figure 4.1. Costs of Immediate Term Generation Options Capable of Delivering Power by Early 1991

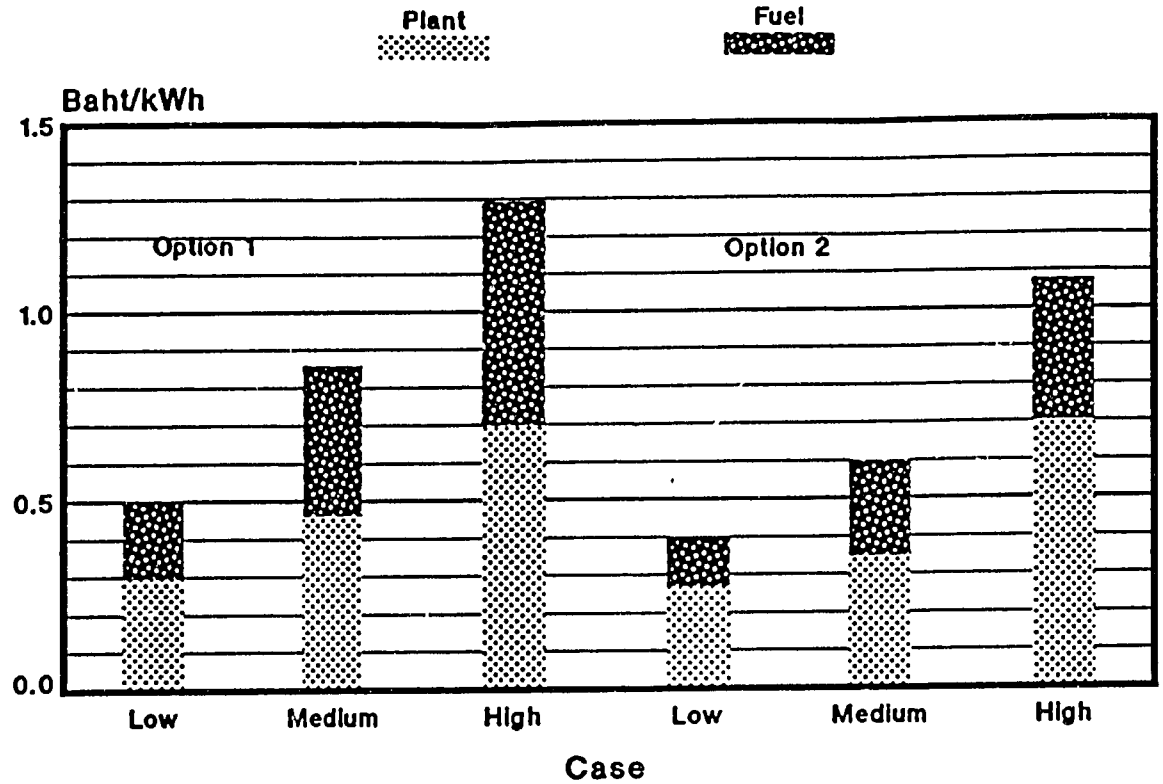

Note that Option 1 is 1 MW, Option 2 is 2.5 MW

Figure 4.2. Interconnect Costs

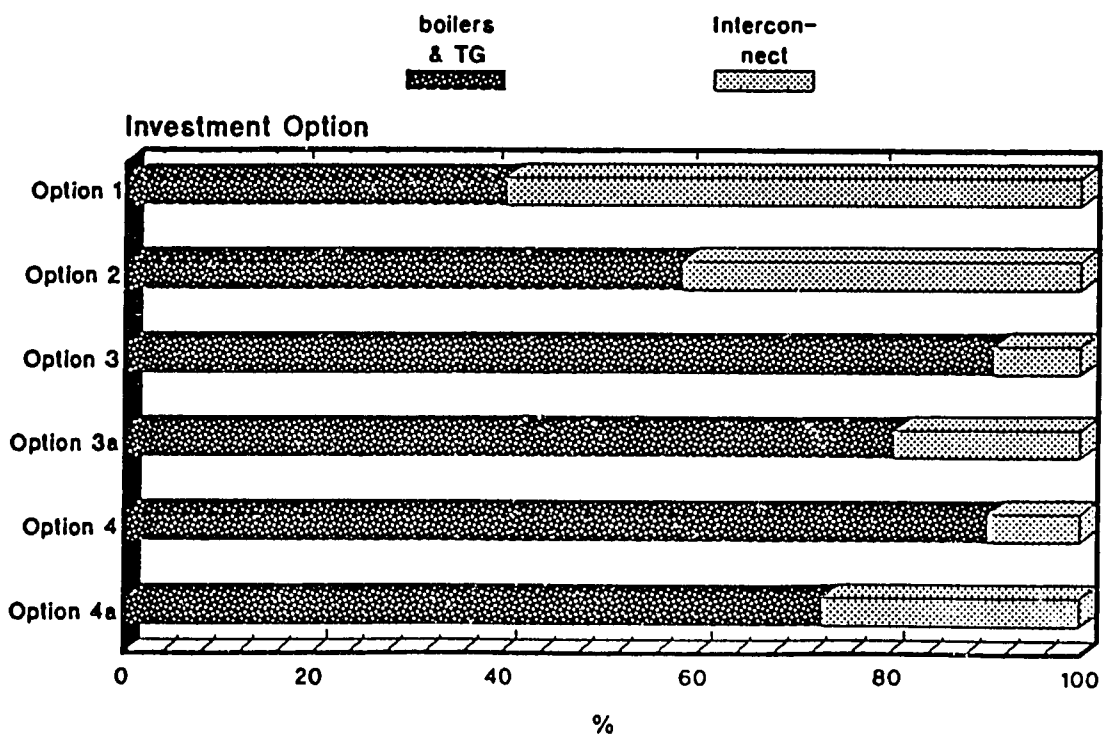

Note high relative interconnect costs in options 1 & 2.

optimistic case, such a plant could operate as frequently as existing thermal power stations, 65%. The required investments for this option are show in Table 4.2.

For the purposes of presentation, the net export of power is assumed to be 2.5 MW, although the actual output with this level of investment could range from 1-5 MW, depending on specific conditions of any particular mill. Assuming 2.5 MW net export, on a per MW basis, these investments work out to ß5.4 M ($214 k) and ß3.8 M ($150 k), respectively. Once the greater plant utilization is accounted for, the unit (per kWh) costs should be generally lower than is the case for Option 1. The range of capital charges and fuels costs is shown in Table 4.2. The median value of the capital costs, ß0.35 per kWh is about one fourth less than the median capital cost in the first option.

If the plant is utilized at a 65% rate, the net capital charges will be as low as ß0.25 per kWh. With higher efficiency overall, Option 2 shows fuel costs of just ß0.27 per kWh when bagasse is ß100/tonne ($4/tonne). Total generation costs, shown at the bottom of Table 4.2, range from just under ß0.4 per kWh to ß1.078 per kWh. The median value is ß0.6 per kWh. The Low, Medium, and High cases are profiled in Figure 4.1 alongside those from the first Option. The second Option is less costly for each of the cases examined due to the relatively high fixed cost of interconnection in the first Option.

Table 4.2. Option 2: Investment Costs and Operational Parameters

		Baht	$
Investment (2.5 MW)			
Mechanical (includes plant modifications)		13,500,000	534,000
Electrical (Includes metering and switchgear)		9,500,000	375,000
Generating Costs (per kWh)			
Fuel	@ $2/tonne	0.125	0.005
	@ $4/tonne	0.251	0.01
	@ $6/tonne	0.376	0.015
Capital Charges	@ 65% plant factor	0.27	0.011
	@ 50% plant factor	0.348	0.014
	@ 25% plant factor	0.702	0.028
Total Costs (per kWh)			
Low		0.396	0.016
Medium		0.598	0.024
High		1.078	0.043

Note: The base case assumption include a 10% interest rate and a 20% return for the equity portion of the investment. No use of cane tops or trash is assumed and the heat rate for the boiler is assumed to range from 27,500-40,000 BTU/kWh during the grinding season and ~80,000 BTU/kWh in the off season.

The design, procurement, and installation of the additional equipment could take as long as 12-18 months. In other words, an immediate decision to become a power exporter would not reach fruition until early-to-mid-1992. This rules out sugar mills as a current (early 1991) and painless addition to the Kingdom's generating mix.

In addition to the scheduling and dispatch issues (see Section 4.1), it is also necessary to consider the incentives aspect of the proposed rate structures for cogenerators. Given the small size of the proposed immediate term cogeneration schemes, it is unlikely that more than 5-10 mills would sign up in the next few months. That is, the potential additions to capacity in early-to-mid-1992 are probably less than 25 MW. If the experience of the early cogenerators is positive, then other mills might be induced to look at the larger scale short term investments. Options 3 and 4 represent two such investment opportunities. Both of these options include new boilers and turbogenerators, additional control devices to improve the mill's efficiency, and the necessary interconnection equipment that was described in Section 3.

Option 3

As with options 1 and 2, the third alternative is designed to integrate with an existing sugar mill. However, a new boiler and turbogenerator system would be added to the plant. The new equipment would be sized to use available surplus bagasse that could be generated with improvements in overall operational efficiency of a mill. In addition, the existing tie line would be replaced with one that would hook directly into the PEA's 22 kV system. With a new boiler and generator system, the thermal efficiency of the operation would be greatly increased. Such a mill might need perhaps half as much fuel to generate one kWh as either of the lower efficiency options.The investment requirements of Option 3 are large relative to the amount of power generated. Table 4.3 shows the costs and operational parameters for this investment.

Table 4.3. Option 3: Investment Costs and Operational Parameters

		Baht	$
Investment (5-10 MW)			
Mechanical (includes plant modifications)		264,124,000	10,450,000
Electrical (Includes metering and switchgear)		25,957,000	1,027,000
Generating Costs (per kWh)			
Fuel	@ $2/tonne	0.101	0.004
	@ $4/tonne	0.202	0.008
	@ $6/tonne	0.303	0.012
Capital Charges	@ 75% plant factor	0.739	0.029
	@ 65% plant factor	0.826	0.033
	@ 50% plant factor	1.019	0.037
Total Costs (per kWh)			
Low		0.84	0.033
Medium		1.028	0.041
High		1.322	0.05

Note: The base case assumption include a 10% interest rate and a 20% return for the equity portion of the investment. No use of cane tops or leaves is assumed and the heat rate for the boiler is assumed to be 20,000 BTU/kWh at all times and on either bagasse or fuel oil.

The total required investment to upgrade the interconnection to 10 MW and install a new 5 MW boiler and turbogenerator would be approximately ฿290 M ($11,480 M). Of this total, about 10% goes for the interconnection cost. Figure 4.2 shows that this cost represents a relatively small proportion of the total investment. In the smaller options, 1 and 2, which operate for a lesser proportion of the year, the interconnection costs are substantial in relative terms. It is important to remember, though, that part of this high relative interconnection cost is due almost entirely to low plant utilization and that this figure can change dramatically if the mill is used for export more of the time. In the case of Option 3, the plant is expected to operate about 65% of the year, the same as an EGAT baseload unit.

As might be expected, the unit capital costs (i.e., ß/kWh) can be quite high, relative to the proposed prices that such generators might receive. Figure 4.3 shows the range of capital costs per kWh for Option 3. Even with a high plant factor (utilization rate), this option gives a median capital charge of ß0.82/kWh. With lower utilization, the capital charge could exceed ß1 per kWh. However, if PEA and EGAT found that power from sugar mills was high on their merit order of dispatch, that is, utilization of 75%, then the capital charge per kWh might be as low as ß0.75. The relatively high efficiency of the Option 3 boilers reduces fuel costs over the earlier options. With bagasse valued at ß100/tonne ($4/tonne), the average fuel cost per kWh is expected to be ß0.2. Even if fuel prices were to double, to ß200/tonne, the fuel cost would still be under the medium fuel expenditures of Option 1.

Option 3a

In spite of the high efficiency of Option 3, it is unlikely that mill owners would invest in such costly equipment, solely for the generation of power for export, at least at the going buyback prices. However, for a mill that intends to install new boilers and turbogenerators, the marginal cost of additional investments for power export may be attractive. The marginal option shows the additional costs of investment for electricity export when a mill must purchase a new boiler and power system. The investments that are additional to a standard sugar mill boiler and turbogenerator are:

- Additional equipment for the boiler
- Additional turbogenerator equipment and piping
- Modifications to the mill itself so that the steam for the power generation system takes priority over the steam for the milling process
- Tie line transformer and the tie line itself

The costs per installed MW of such marginal investments are:

Mechanical	ß89,000,000 ($35,000,000)
Electrical	ß22,000,000 ($850,000)

These marginal costs are about 38% of the cost of purchasing a new boiler and turbogenerator for the sole purpose of generating electricity. With total marginal plant costs of ß111 M ($4.4 M) the additional 5 MW of boiler and turbogenerator capacity and the upgrade of the interconnection to 10 MW, the capital costs that are charged to the power export side of the mill are far lower than for the pure Option 3. Figure 4.3 shows that these capital charges range from ß0.3-0.5 per kWh, less than half the figures for the entire plant option. Figure 4.2 shows that interconnection costs are relatively more important for Option 3a than for Option 3,

since the rationale for the investment is primarily power export. Using the same fuel costs as previously, the median generation cost would be ß0.52 per kWh. The high end of the range, ß0.62 per kWh, is still below the lowest cost for Option 3 and is about the same as the median for Option 2. These results are shown in Figure 4.3.

Option 4

At the high end of the cost and commitment scale is a dedicated large scale power plant of 25 MW export capability. This alternative is typical of the types of units that are installed in Hawaii as stand-alone power generating stations. Solid fuel boilers generating 25 MW of output cost about the same as a small coal-fired power station, $1,365 per installed kW. Operationally, the 25 MW plant would require that the sugar mill operate on a priority set by the power plant. Under power generation priority, the steam for the export generation would always take precedence over the steam for the mill's own needs. This unit would connect to the 69 or 115 kV substation in the EGAT system rather than to the 22kV PEA subtransmission system. Table 4.4 shows the investment and operational costs for this larger scale option. As with Option 3, the investment costs are high relative to other generation options in the EGAT system.[5] Table 4.4 shows that the unit capital charges are even higher for this option than for Option 3. The main advantage of the large single boiler is that it could be run efficiently on fuel oil as well as bagasse. This gives EGAT an option to dispatch such a unit on oil if sufficient supplies of bagasse are not available. With median unit capital charges of ß1 per kWh, Option 4 generates electricity at a total cost of ß1.16 per kWh. Infrequent operation can raise the total generation cost to as much as ß1.24/kWh.

Option 4a

As with Option 3, there is a marginal investment option for the large, stand-alone boiler. Option 4a considers only the extra costs that might be needed for the new boilers, turbogenerators, and interconnection equipment at a sugar mill processing enough sugarcane to fuel a 25 MW boiler. As with Option 3a, this option includes only those investments that are additional in order that the mill can export power to the grid.

[5] For example, a new gas-fired combined cycle unit costs about $650 per installed kW (ß16.4 million), about half the cost of a new large bagasse boiler.

Table 4.4. Option 4: Investment Costs and Operational Parameters

		Baht	$
Investment (25 MW)			
Mechanical (includes plant modifications)		780,000,000	30,000,000
Electrical (Includes metering and switchgear)		82,500,000	3,250,000
Generating Costs (per kWh)			
Fuel	@ $2/tonne	0.078	0.003
	@ $4/tonne	0.157	0.006
	@ $6/tonne	0.235	0.009
Capital Charges	@ 75% plant factor	0.878	0.035
	@ 65% plant factor	1.032	0.041
	@ 50% plant factor	1.318	0.052
Total Costs (per kWh)			
Low		0.957	0.038
Medium		1.188	0.047
High		1.553	0.062

Note: The base case assumption include a 10% interest rate and a 20% return for the equity portion of the investment. No use of cane tops or leaves is assumed and the heat rate for the boiler is assumed to be 16,000 BTU/kWh at all times and on either bagasse or fuel oil.

The tie line is relatively more expensive in this option than in 3a due to the higher cost of the 69 or 115 kV line and transformer (see Figure 4.2). In relative terms, the other interconnection costs are about the same as for Option 3a. On a per MW basis, the investment costs for this option are:

Mechanical	฿209,000,000 ($8,200,000)
Electrical	฿76,500,000 ($3,000,000)

The total marginal cost of the design, equipment, and modifications required to export 25 MW of power is ฿285M ($11.1 M). Figure 4.4 shows how this cost computes to a median value of ฿0.33/kWh. The high end of the range is ฿0.43 while the lower range is ฿0.29/kWh. Given the higher efficiency of such a unit, the fuel costs will be about ฿0.16/kWh when bagasse is valued at ฿100/tonne. The total power generation costs, which range from ฿0.43-0.62/kWh, are shown in Figure 4.4. The reader should note that these costs are only for bagasse-fuelled generation. The large boilers will use #6 oil for part of year. The average annual cost for such combined fuel generation will depend on the proportion of the fuel supply that is oil. Other fuel options may exist which enable the mill to use relatively inexpensive

Figure 4.3. Generation and Interconnection Costs for Options 3 and 3a

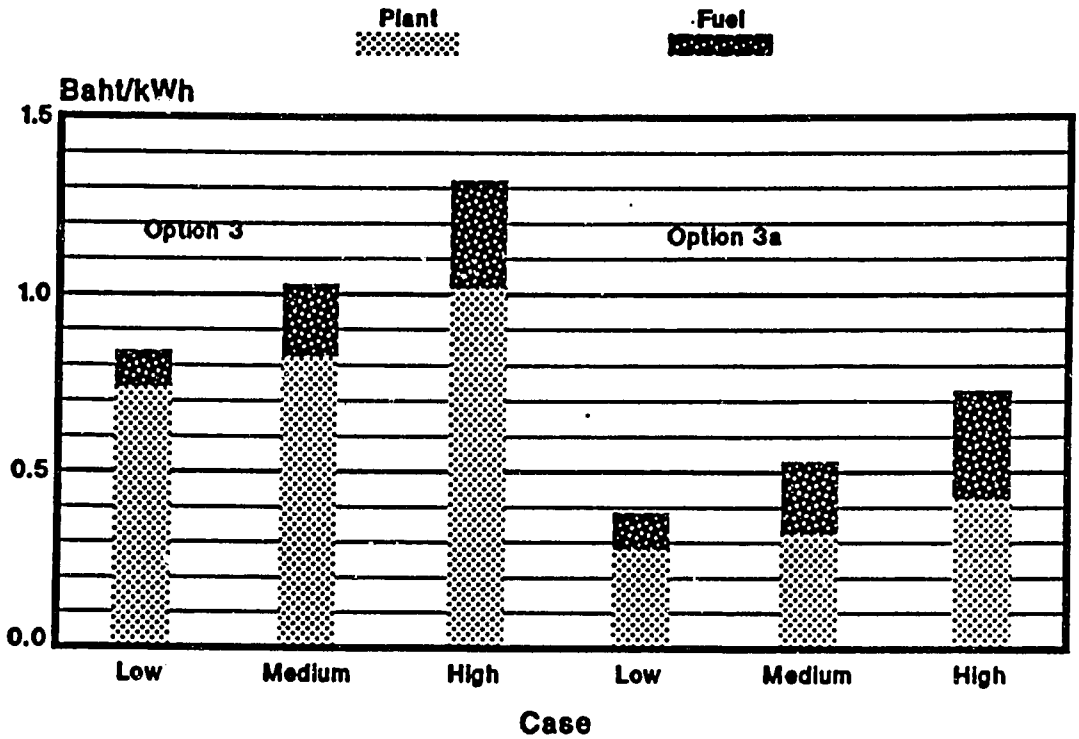

Note that Option 3 generates 10 MW for export

e 4.4. Generation and Interconnection Costs for Options 4 and 4a

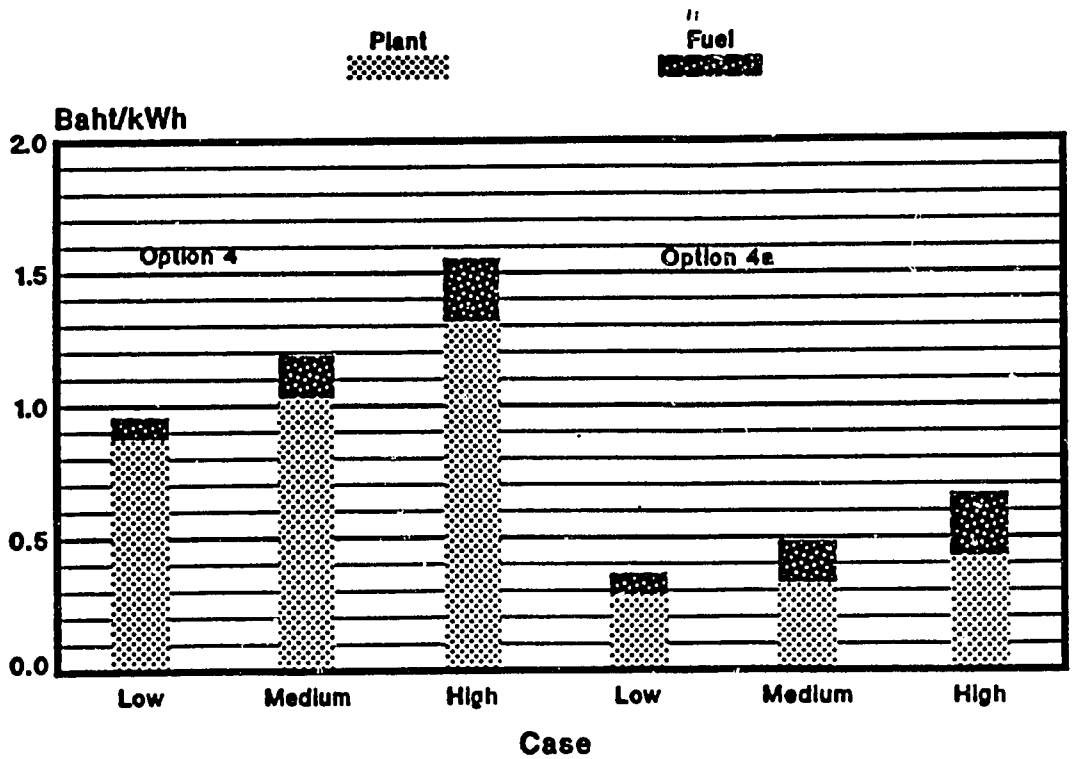

Note that Option 4 generates 25 MW for export

fuel throughout the year. In particular, recent trials with collection and use of cane trash have shown that it may be possible to collect this trash and transport it to a mill in the off-season at prices that are competitive with fuel oil. The trash, consisting primarily of tops and leaves left in the field, has been baled and transported at prices of about $25/tonne (ß630) which compares very favorably with fuel oil on an energy equivalent basis.[6] Trials will continue to determine optimal collection, baling, and transporting modes for this potential fuel.

4.2.2 Fuel Price Issues

It was a working assumption of this project that bagasse would be available to cogenerators in whatever volumes might be required. The reasoning behind this assumption is quite direct; the high cost of transporting bagasse limits the value of that fuel to customers at any significant distance from the mill. The team obtained data from a number of mills and bagasse buyers which indicated that a typical sugar mill selling bagasse to board or paper plants could expect to receive ß50-100/tonne. The highest figure that the consultants encountered was ß120/tonne.

With transport costs running from ß50-150/tonne, the apparent value of the bagasse to board and pulp mills exceeds ß150/tonne. At the same time, those sugar mills that are located far from board mills are unlikely to find any market for their surplus bagasse. In most cases, bagasse has a value to the mill of less than ß100/tonne.[7] This figure was chosen as the baseline value for fuel when making comparisons among different generation investment options.

Instead of simply assuming some value for fuel, utilities often find it helpful to calculate what the fuel is worth to the power plant; in other words, what can the generator pay for fuel. This measure is called the *fuel netback value*, and is the maximum that a user can pay for fuel given the following data:

[6] The present cost of procuring the cane trash works out to $1.45/million BTU, about half the cost of heavy fuel oil delivered to such a site.

[7] A price of baht 100/tonne corresponds to baht 12.5 per million BTU. As a point of reference, the current world crude oil price, $28/bbl, is about $5.00 per million BTU or baht 125 per million BTU.

- The cost of the capital investment
- The frequency with which the equipment is used - i.e., dispatch[8]
- The efficiency of the plant (BTU/kWh)
- The price at which the power is purchased.

The fuel netback value is calculated as:

$$\text{NB fuel} = \text{Electricity Price per kWh} - \frac{(\text{annual capital charge} + \text{annual O\&M charge})}{(\text{kWh generated in year})}$$

In other words, the netback value shows how much a generator can pay for fuel on a per kWh basis. Once we know the netback value of fuel on an output basis, it is an easy conversion to calculate the value of that fuel on an input (per tonne or per 10^6 BTU) basis. In this report, the convention of expressing fuel netback values in tonnage or 10^6 BTU terms is used.

For example, take the case of plant Option 3 (See Table 4.3). Suppose that the purchase price for 1 kWh = ß1.25. Suppose further that the capital and O & M cost of generation, based on dispatch of 5694 hours annually (i.e., 65%) is ß0.826/kWh. Using the netback formula given above, we get:

$$\text{NB} = \text{ß}1.25 - \text{ß}0.826$$

$$= \text{ß}0.420$$

In other words, the generator can pay ß0.42 in fuel charges to generate 1 kWh of electricity. Since the heat rate of the plant is 20,000 BTU/kWh, we calculate that ß0.42 is the value of 20,000 BTU. This figure is equivalent to a value of ß21.2 per 10^6 BTU ($0.84) or $4.70 (ß118.7) per barrel of oil equivalent, far below current market prices for fuel oil. In other words, given the prices, costs and efficiencies of the equipment, along with the frequency of use (dispatch), the plant cannot afford to pay more than ß210 per tonne of bagasse at 10.9 x 10^6 BTU per tonne of bagasse. If dispatch goes up, then the fuel netback value will rise as well.

[8] This determines the number of kWh over which each unit of investment is amortized. As was shown in Section 5.2.1, infrequent use of the additional capital equipment affects unit capital costs adversely. Given equal performance, high unit capital costs in turn reduce the value of any given fuel to a generator.

Conversely, if dispatch goes down, then the price that a mill can pay for fuel will fall as well. In a similar way, each of the four factors listed above directly affects the value of fuel to the plant. If dispatch, for example, rose to 75% or 6570 hours annually, the netback value of fuel would rise as follows, assuming the other parameters remained constant:

$$NB = ฿1.25 - ฿0.739$$

$$= ฿0.511$$

With such a netback value per kWh (20,000 BTU), the value of 10^6 BTU rises to ฿25.55 ($1.01). This figure is equivalent to ฿278.5/tonne of bagasse ($11) or ฿143/boe ($5.66).

When a netback value exceeds the cost of acquiring the fuel, then the mill can justify the investment. However, if the fuel netback value is low or negative, this usually indicates that the capital is too expensive, the power purchase price too low, or the boiler too inefficient. Using a range of potential power purchase prices, the team calculated the fuel netback value for each of the plants. Three purchase prices for electricity were used to calculate the fuel netback values. These purchase prices are shown in Table 4.5, and are the ones agreed upon by the Thai National Energy Policy Council for cogenerators. They are converted from composite measures of capacity and energy and time of day to an average price per kWh based on 24 hours/day generation. The prices used to calculate fuel netback values are: ฿0.63, 0.85, and 0.92 per kWh. The purchase prices used in Table 4.5 are equivalent to the non-firm, 11-16 year, and 21-25 year contracts, respectively (See Annex 2 for further details on the rates of return and other economic calculations from these purchase prices. With an assumed opportunity cost of bagasse of ฿100/tonne, $0.50 per million BTU, Table 4.5 shows that the non-firm price of ฿0.63/kWh is insufficient to compete with other uses of the bagasse for Options 1, 3, and 4.[9] On the other hand, the more cost-effective options, 2, 3a, and 4a, can all pay more for bagasse than can other uses,and Options 3a and 4a can do so, even at non-firm power purchase prices.

For the higher-cost investment options, 3 and 4, power prices in excess of ฿1.25/kWh would be required for the mill to impart a value to bagasse that is greater than what its competing uses can command. However, both of the marginal options, 3a and 4a, impart more value to the bagasse than either of the low cost

[9] ฿100 per tonne is the average opportunity cost for bagasse vis-a-vis its other users, as a feedstock for paper or fiberboard manufacture.

Table 4.5. Netback Values For Bagasse (ß/tonne)and Oil ($/bbl)

Power purchase price (ß/kWh)	Bagasse (ß/tonne)						Fuel oil ($/bbl)	
	Option 1	Option 2	Option 3	Option 3a	Option 4	Option 4a	Option 3a	Option 4a
0.63	23.03	51.23	-106.82	145.23	-219.29	147.13	5.64	5.71
0.85	53	91.2	13.08	247.37	-99.19	257.13	9.61	9.99
0.92	62.91	104.4	52.7	281.13	-59.57	293.48	10.92	11.40

immediate term options. This result would hold for any fuel. What it means is that the high capacity, high efficiency mills could afford to pay more for their fuel than can the lower efficiency ones. Indeed, such mills could probably afford to pay farmers enough to supply cane residues whereas less efficient mills might not be able to do so.

Another important point to remember is that the larger mills are more likely than are the smaller ones to sign long term contracts with EGAT. Under the proposed schedule of buyback prices, the longer term contracts will pay more per kWh than will spot sales contracts. This means that longer term contracts will impute more value to the fuel than will spot ones. For example, at a purchase price of ß0.92/kWh, a 3a-type mill could pay $1.22 per 10^6 BTU for fuel, much more than the $0.38/$10^6$ BTU for a 2-type mill which is in turn far greater than the $0.23/$10^6$ BTU for the 1-type mill.[10]

Table 4.5 shows that burning fuel oil during part of the year would result in losses for the mills, even on the low cost 3a and 4a options. In each case, the maximum netback value for fuel oil is about $11/barrel of fuel oil, well below its price in Thailand or on world markets. Mills will have great incentives to use

[10] Details of the netback pricing methodology are contained in Annex 2. However, the conversion from baht per kWh for fuel to $ per million BTU is simple and straightforward. The fuel netback value in baht/kWh represents the maximum fuel value for one kWh. This is the value of the input energy which is 80,000 BTU in the case of Option 1, in other words, the plant's heat rate in BTU/kWh. Therefore, a netback value of ß0.4617/kWh is multiplied by the number of BTU in one tonne of bagasse, 10.9 million, and divided by the plant's heat rate:

baht/tonne = fuel netback value x (heating value of one tonne of bagasse/plant heat rate)
= 0.4617 x (10,900,000/80,000)
= ß63/tonne

The uses of $/million BTU or baht/tonne are interchangeable, simply requiring the appropriate conversion factors for both money and energy.

bagasse in an efficient manner since resorting to fuel oil as a means of fulfilling a power purchase contract will result in losses for them.

4.3 Power Purchase Price Issues

At the present time there is no final set of purchase price terms for cogenerators or independent power producers. As a result, the team's economist has used a tariff structure proposal that was released in July 1990 by the Government's Cogeneration Working Group. The proposed buyback tariffs are of two types, non-firm or spot sales and long term contracts. The spot sales tariff has three parts, for peak, shoulder, and baseload supply. They are ß0.87, 0.65, and 0.55, respectively. Based on the hours for which each of the non-firm tariffs is effective, the composite price that EGAT will pay for non-firm electricity is ß0.63/kWh.

In contrast, the firm supply contract terms include a ß0.69/kWh payment for energy[11] plus the following fixed charge schedule:

Contract Length	Payment (ß/kW/month)
5 - 10 years	100
10 - 15 years	115
15 - 20 years	123
20 - 25 years	170

Clearly, these contract terms place a premium on the steady long term commitment by cogenerators. The proposed structure appears to be sound and the energy payment appeared to be sufficient for most fuel types unless there is a run up in fuel prices.[12] There may be some question about the particular periods that were chosen but this is a rather minor quibble in light of the overall soundness of the contract structure.

To assess the incentive effects of these proposed purchase terms, the team calculated the internal rates of return on investment implied by such prices. In addition, the net present value of production under each option was calculated. Selected results, for the medium cases, are shown below in Table 4.6 with a more complete listing in Annex 2.

[11] This payment includes maintenance, management, and fuel costs.

[12] If crude oil prices are in the $30/bbl range, an energy payment of ß0.85/kWh may be more appropriate. Using such a figure will change the rates of return substantially and improve the profitability of all investments for long term firm power supply.

Table 4.6. Rate of Return Analysis for Sugar Mills: Mid-range Case

Mill Option	Net Output (kWh/yr)	Non-Firm (energy only)	Contract Regime: Firm Power: # years 5-10	11-15	16-20	21-25
Option 1	1,314,000					
IRR		-8.05%	1.46%	7.25%	9.50%	12.10%
NPV		-2.842	-1.552	-0.7	-0.155	0.762
Option 2	10,950,000					
IRR		11.17%	20.73%	23.91%	24.94%	27.48%
NPV		1.159	11.904	20.937	26.68	35.066
Option 3	56,940,000					
IRR		-2.69%	3.58%	8.70%	10.67%	12.70%
NPV					12.4	57.3
Option 3a	56,940,000					
IRR		14.83%	23.73%	26.51%	27.39%	29.80%
NPV		26	82	132	164	209
Option 4	142,350,000					
IRR		-3.85%	1.72%	7.09%	9.20%	11.18%
NPV		-400	-261	-127	-42.4	72.8
Option 4a	142,350,000					
IRR		16.41%	24.95%	27.62%	28.46%	30.81%
NPV		88	229	362	447	562

Note: Net present value figures given in millions of baht.

For spot sales, the two immediate term options, 1 and 2 produced satisfactory results only if the plants were utilized well. In other words, low plant factors would almost certainly result in substantial losses for each of the mills. The mid-range case, shown in Table 4.6, indicates that at 15% capacity utilization, Mill option 1 can yield a modest positive return under a long term (>20 years) firm supply contract. A contract to supply non-firm energy results in substantial losses for the mill under virtually any reasonable rate of capacity utilization. In terms of present worth, the mid-range results for Option 1 indicate that only the longest range contract option yields a positive value. In order to be an attractive investment, the mill would need to generate power at least 25% of the year and sell that power on a firm supply contract.[13]

[13] Under the proposed purchase regulations, EGAT would purchase only from connecting points in excess of 50 MW. Such a requirement suggests mills will sell to PEA rather than EGAT. For larger mills, selling to PEA may cause problems because of the size of PEA substations.

Mill Option 2 shows attractive returns under virtually all of the contract régimes. Even spot sales give a modest positive return, 11.2%, with the mid-range capacity utilization rate of 25%. Firm power sales contracts for virtually any term show adequate returns in the mid-range case, exceeding 20% and with a present value worth well in excess of ฿10 million. Firm contracts for terms exceeding 10 years have present worths that exceed the value of the initial investments by substantial margins.

For the two larger options, the initially heavy investment costs make a return based on energy sales alone a virtual impossibility. For both mills, the IRR for spot sales is negative in the mid-range case. The rates of return, and present values only move into acceptable ranges (above 10%) if the plants are used about 75% of the time, higher than the 65% assumed in the medium case and higher than EGAT's own averages.

The marginal options, 3a and 4a, both show attractive rates of return under all contract régimes. Indeed, the returns on investment exceed 20% for all contract options in the mid-range case. This means that a mill considering a new boiler or relocating may find it worth their while to make the additional investments necessary for power generation.[14]

Findings on Pricing Issues

Several conclusions emerge from the economic analysis that was performed for this project. On the subject of incentives for supply investments, the team found:

- The proposed spot purchase prices are sufficient only for the Option 2 mill. Other sugar mills cannot make profits from the average price received for spot sales. Therefore, the immediate term incentive effect on power supplies is likely to be modest at best.
- Several of the investment options, even the large investments, 3 and 4, appear marginally attractive under the longer term contract prices.
- Options 2, 3a, and 4a show the most promising rates of return for most contract terms, especially those of 10 years or more.

[14] In Annex 3, one of the case studies examines the export potential of one of the mills visited by the consultants, Thai Identity. This mill appears to have significant potential for export, particularly with additional investments in its boilers and turbogenerators.

- The present values of the marginal options are extremely attractive relative to virtually any other investments for those mills planning to install new boilers and generators.

With regard to fuel supply, it is apparent that mills which generate power for sale to the grid may occasionally need to purchase bagasse on the market, especially if the mill plans to generate year-round. In addition, the idea of using fuel oil in some newer mills has been discussed. The team found that:

- Efficient mills which export more than 2.5 MW, should be able to pay enough for bagasse, i.e., more than ฿100/tonne, to ensure a steady supply. The bagasse is more valuable to a sugar mill as a fuel for power generation than to that same mill if sold to a board or pulp plan.
- The price that mills can pay for fuel is not sufficient to cover purchases of fuel oil except in extreme cases to avoid non-compliance penalties imposed by the EGAT contracts.
- The larger mills will be able to augment their own supplies of fuel with cane tops and leaves that can be supplied at prices of around ฿145/tonne. Fuel netback values will cover the costs of such purchases more readily than they will fuel oil or coal but at current prices they are not sufficient to cover the projected cost of procuring cane trash.

Annex 1: Itinerary of the Thailand Cane Energy Mission,October, 1989

The USAID Cane Energy Program is under the direction of USAID's Office of Energy in Washington, DC. The Thailand program is carried out with the cooperation of the Thailand USAID Mission.

This mission started on 16 October, 1989 in Bangkok, Thailand. The Chief of Party was Dr. Donald Hertzmark with overall direction being provided by Mr. John Kadyszewski of Winrock International. The other members of the mission included the generation specialist, Mr. Ted Vorfeld and the interconnection specialist, Mr. Harold Miura.

The team visited three mills while in Thailand and met with the government's cogeneration working group. The schedule for this mission was as follows:

Date	Persons/Organization Visited
16 October	Arrival in Thailand
17 October	USAID: Khun Mintara
	NEPO: Dr. Piyasawat
18 October	USAID: Mr. Don Reese
20 October	Cogeneration Working Group
24 October	Provincial Electric Authority:
	Khun Thanu and staff
	Metropolitan Electric Authority:
	Khun Namchoke and staff
	EGAT: Khun Udorn and staff
26 October	EGAT: Dr. Sivanond
27 October	Team visist to United Farmer's Mill Chiyaphum
	Team visit to EGAT & PEA sub stations
28 October	Team visit to Phoenix Pulp & paper Mill
	Team visit to MDF Fiberboard Plant
29 October	Team visit to Kamphaeng Phet Sugar Mill
30 October	Team visit to Thai Identity Co. Sugar Mill
31 October	Briefing for Cogeneration Working Group at EGAT Board Room
1 November	Team departs for US

Annex 2: Fuel Netback Value and Rate of Return Calculations

In Section 4 we presented selected results for the critical economic and financial analysis of the proposed power sector investments. This Annex presents some of the detailed calculations that lay behind the findings presented in the text.

Netback Values

The first Table, presents the worksheet from which fuel netback values were calculated. This worksheet uses the formula provided in Section 5 and applies that formula to three of the proposed purchase prices in combinations with the low, medium, and high cost generation cases. The worksheet is accessible in the Excel« spreadsheet program and provides a quick way to calculate fuel netback values given a variety of purchase prices and plant costs.

A much more detailed model is available to estimate generation costs and fuel netback values for changes in virtually all relevant parameters. That program, called TGCOST, was developed for conventional generation sources and then adapted to sugar mill parameters.

The Tables are largely self-explanatory. The first array in each set of Tables gives the fuel netback value for three of the proposed purchase prices. The first, ß0.63, represents the non-firm purchase price while the other two, ß0.85 and ß0.92, represent the 11-15 and 21-25 year contract prices for firm power. Netback values are given in terms of baht/kWh and then converted, at 10.9 x 106 BTU/tonne to tonnes of bagasse. The second array gives netback values for oil in plants 3 and 4 in both baht/barrel of oil equivalent (boe) and in $/barrel. Finally, at the bottom is a listing of the annual hours of operation or plant factors for the options in that case.

High Cost Case

Fuel Netback Values

	baht/kWh	0.63		0.85		0.9227	
Option	Plant Costs	per kWh	per tonne	per kWh	per tonne	per kWh	per tonne
1	0.70	-0.07	-9.26	0.15	20.71	0.22	30.62
2	0.70	-0.07	-13.08	0.15	26.89	0.22	40.09
3	1.02	-0.39	-212.00	-0.17	-92.10	-0.10	-52.48
3a	0.02	0.61	333.50	0.83	453.40	0.90	493.02
4	1.32	-0.69	-374.96	-0.47	-255.06	-0.40	-215.44
4a	0.01	0.62	339.37	0.84	459.27	0.92	498.89

Note: Plant costs cover investment and non-fuel generation and interconnection costs for each option.

Oil Equivalent Netback Values for Options 3-4

		baht per boe			dollars/bbl		
	baht/kWh	0.63	0.85	0.92	0.63	0.85	0.92
	'3	-126.42	-54.92	-31.30	($4.91)	($2.13)	($1.22)
Options	3a	198.88	270.38	294.00	$7.72	$10.50	$11.42
	'4	-223.60	-152.10	-128.47	($8.68)	($5.91)	($4.99)
	4a	202.38	273.88	297.51	$7.86	$10.64	$11.55

Operational hours for each plant option are as follows:

Option	Hours/yr	Plant Factor
1	876	10%
2	2190	25%
3, 3a	4380	50%
4, 4a	4380	50%

One tonne of bagasse = 10.9 million BTU.

Medium Cost Case

Fuel Netback Values

	baht/kWh	0.63		0.85		0.9227	
Option	Plant Costs	per kWh	per tonne	per kWh	per tonne	per kWh	per tonne
1	0.46	0.17	23.03	0.39	53.00	0.46	62.91
2	0.35	0.28	51.23	0.50	91.20	0.57	104.40
3	0.83	-0.20	-106.82	0.02	13.08	0.10	52.70
3a	0.01	0.62	335.77	0.84	455.67	0.91	495.30
4	1.03	-0.40	-219.09	-0.18	-99.19	-0.11	-59.57
4a	0.01	0.62	340.30	0.84	460.20	0.92	499.82

Note: Plant costs cover investment and non-fuel generation and interconnection costs for each option.

Oil Equivalent Netback Values for Options 3-4

		baht per boe			dollars/bbl		
	baht/kWh	0.63	0.85	0.92	0.63	0.85	0.92
	'3	-63.70	7.80	31.43	($2.47)	$0.30	$1.22
Options	3a	200.23	271.73	295.36	$7.78	$10.55	$11.47
	'4	-130.65	-59.15	-35.52	($5.07)	($2.30)	($1.38)
	4a	202.93	274.43	298.06	$7.88	$10.66	$11.58

Operational hours for each plant option are as follows:

Option	Hours/yr	Plant Factor
1	1314	15%
2	4380	50%
3, 3a	5694	65%
4, 4a	5694	65%

One tonne of bagasse = 10.9 million BTU.

Low Cost Case **Fuel Netback Values**

	baht/kWh	0.63		0.85		0.9227	
Option	Plant Costs	per kWh	per tonne	per kWh	per tonne	per kWh	per tonne
1	0.30	0.33	45.37	0.55	75.35	0.63	85.25
2	0.27	0.36	65.40	0.58	105.37	0.65	118.57
3	0.74	-0.11	-59.41	0.11	60.49	0.18	100.12
3a	0.01	0.62	336.78	0.84	456.68	0.91	496.31
4	0.88	-0.25	-135.16	-0.03	-15.26	0.04	24.36
4a	0.00	0.63	340.70	0.85	460.60	0.92	500.22

Note: Plant costs cover investment and non-fuel generation and interconnection costs for each option.

Oil Equivalent Netback Values for Options 3-4

		baht per boe			dollars/bbl		
	baht/kWh	0.63	0.85	0.92	0.63	0.85	0.92
	'3	-35.43	36.08	59.70	($1.38)	$1.40	$2.32
Options	3a	200.83	272.33	295.96	$7.80	$10.58	$11.49
	'4	-80.60	-9.10	14.53	($3.13)	($0.35)	$0.56
	4a	203.17	274.67	298.30	$7.89	$10.67	$11.58

Operational hours for each plant option are as follows:

Option	Hours/yr	Plant Factor
1	2190	25%
2	5694	65%
3, 3a	6570	75%
4, 4a	6570	75%

One tonne of bagasse = 10.9 million BTU.

68

Rate of Return and Net Present Value Analysis

The Tables that follow show the financial and economic analysis results for each of the options for each fuel price, plant factor, and power purchase price. In each of the six cases presented there is a summary Table which lists the summary of financial results along with other relevant information, including plant capacity in MW and annual output in kWh for that case. The rates of return are given on a percent basis while the present value figures are listed in baht.

Each summary Table is followed by three cash flow Tables which show the patterns of cash flows for each of the contract régimes. The contents of each column are as follows:

Column	Contents
1	year
2	annual costs in cash flow terms
3	cash flows for 10 years of non-firm power supply @ ฿0.63/kWh
4	cash flows for 10 years of firm power supply @ ฿0.82/kWh
5	cash flows for 15 years of firm power supply @ ฿0.85/kWh
6	cash flows for 20 years of firm power supply @ ฿0.86/kWh
7	cash flows for 25 years of firm power supply @ ฿0.92/kWh

At the bottom of the first of these cash flow tables is a summary of the annual receipts by case (low, medium, high) and by power purchase price. These Tables are also parts of a financial analysis package written for Microsoft« Excel«. In this package, purchase prices, investment costs, plant capacities, and plant factors can be changed easily. The resulting set of Tables will show the effects of such changes on annual cash flow, rates of return, and net present value.

Rate of Return Analysis for Mill 1

Net Output (MW)
1

		Contract Regime				
		Non-Firm	5-10	11-15	16-20	21-25
Net Output (kWh/yr)						
High Cost	876000					
	IRR	-31.67%	-13.71%	-12.64%	-12.10%	-9.17%
	NPV (baht)	-4,249,110	-3,389,505	-3,298,098	-3,249,348	-2,962,940
Med. Cost	1314000					
High Cost	IRR	-8.05%	1.46%	7.25%	9.50%	12.10%
	NPV (baht)	-2,841,727	-1,552,320	-700,153	-154,841	762,192
High	2190000					
	IRR	12.05%	21.35%	24.60%	25.63%	28.18%
	NPV (baht)	424,557	2,573,569	4,520,245	5,755,950	7,487,289

Discount rate = 10%

Rate of Return Worksheet: High Cost Case

Year	Costs	Contract Regime: Net Annual Cash Flow				
		Non-Firm	5-10	11-15	16-20	21-25
-1	1500000	-1500000	-1500000	-1500000	-1500000	-1500000
0	3700000	-3700000	-3700000	-3700000	-3700000	-3700000
1	521220	33945	203220	221220	230820	287220
2	521220	33945	203220	221220	230820	287220
3	521220	33945	203220	221220	230820	287220
4	521220	33945	203220	221220	230820	287220
5	521220	33945	203220	221220	230820	287220
6	521220	33945	203220	221220	230820	287220
7	521220	33945	203220	221220	230820	287220
8	521220	33945	203220	221220	230820	287220
9	521220	33945	203220	221220	230820	287220
10	521220	33945	203220	221220	230820	287220
11	521220			221220	230820	287220
12	521220			221220	230820	287220
13	521220			221220	230820	287220
14	521220			221220	230820	287220
15	521220			221220	230820	287220
16	521220				230820	287220
17	521220				230820	287220
18	521220				230820	287220
19	521220				230820	287220
20	521220				230820	287220
21	521220					287220
22	521220					287220
23	521220					287220
24	521220					287220
25	521220					287220

		Non-firm Capacity - baht/kWh			Firm Capacity - baht/kW/Mo Contract Terms (years)				
		Peak	Shoulder	Base	5-10	11-15	16-20	21-25	Energy
Case		0.87	0.65	0.55	100	115	123	170	0.69
low	0.1	95265	249112.5	210787.5	120000	138000	147600	204000	604440
med	0.15	142897.5	373668.8	316181.3	180000	207000	221400	306000	906660
high	0.25	238162.5	622781.3	526968.8	300000	345000	369000	510000	1511100
$1 =	25.75 baht								
		0.125	0.4375	0.4375					

Rate of Return Worksheet: Medium Cost Case

Year	Costs	Contract Regime Net Annual Cash Flow				
		Non-Firm	5-10	11-15	16-20	21-25
-1	1500000	-1500000	-1500000	-1500000	-1500000	-1500000
0	3700000	-3700000	-3700000	-3700000	-3700000	-3700000
1	521658	311089.5	565002	592002	606402	691002
2	521658	311089.5	565002	592002	606402	691002
3	521658	311089.5	565002	592002	606402	691002
4	521658	311089.5	565002	592002	606402	691002
5	521658	311089.5	565002	592002	606402	691002
6	521658	311089.5	565002	592002	606402	691002
7	521658	311089.5	565002	592002	606402	691002
8	521658	311089.5	565002	592002	606402	691002
9	521658	311089.5	565002	592002	606402	691002
10	521658	311089.5	565002	592002	606402	691002
11	521658			592002	606402	691002
12	521658			592002	606402	691002
13	521658			592002	606402	691002
14	521658			592002	606402	691002
15	521658			592002	606402	691002
16	521658				606402	691002
17	521658				606402	691002
18	521658				606402	691002
19	521658				606402	691002
20	521658				606402	691002
21	521658					691002
22	521658					691002
23	521658					691002
24	521658					691002
25	521658					691002

Rate of Return Worksheet: Low Cost Case

Year	Costs	Contract Regime: Net Annual Cash Flow				
		Non-Firm	5-10	11-15	16-20	21-25
-1	1500000	-1500000	-1500000	-1500000	-1500000	-1500000
0	3700000	-3700000	-3700000	-3700000	-3700000	-3700000
1	433620	954292.5	1377480	1422480	1446480	1587480
2	433620	954292.5	1377480	1422480	1446480	1587480
3	433620	954292.5	1377480	1422480	1446480	1587480
4	433620	954292.5	1377480	1422480	1446480	1587480
5	433620	954292.5	1377480	1422480	1446480	1587480
6	433620	954292.5	1377480	1422480	1446480	1587480
7	433620	954292.5	1377480	1422480	1446480	1587480
8	433620	954292.5	1377480	1422480	1446480	1587480
9	433620	954292.5	1377480	1422480	1446480	1587480
10	433620	954292.5	1377480	1422480	1446480	1587480
11	433620			1422480	1446480	1587480
12	433620			1422480	1446480	1587480
13	433620			1422480	1446480	1587480
14	433620			1422480	1446480	1587480
15	433620			1422480	1446480	1587480
16	433620				1446480	1587480
17	433620				1446480	1587480
18	433620				1446480	1587480
19	433620				1446480	1587480
20	433620				1446480	1587480
21	433620					1587480
22	433620					1587480
23	433620					1587480
24	433620					1587480
25	433620					1587480

Rate of Return Analysis for Mill 2

Net Output (MW)
2.5

		Contract Regime			
	Non-Firm	5-10	11-15	16-20	21-25
Net Output (kWh/yr)					
High Cost 5,475,000					
IRR	-7.36%	1.18%	1.94%	2.34%	4.57%
NPV (baht)	-12,957,770	-7,585,241	-7,013,949	-6,709,260	-4,919,210
Med. Cost 10,950,000					
IRR	11.17%	20.73%	23.91%	24.94%	27.48%
NPV (baht)	1,159,150	11,904,208	20,936,605	26,679,877	35,066,312
High Cost 14,235,000					
IRR	24.45%	34.27%	36.48%	37.20%	39.99%
NPV (baht)	16,652,015	30,620,890	44,529,438	53,340,876	65,078,494

Discount rate = 10%

Rate of Return Worksheet: High Cost Case

Year	Costs	Contract Regime: Net Annual Cash Flow				
		Non-Firm	5-10	11-15	16-20	21-25
-1	1E+07	-13500000	-13500000	-13500000	-13500000	-13500000
0	1E+07	-9500000	-9500000	-9500000	-9500000	-9500000
1	2E+06	1411181	2469150	2581650	2641650	2994150
2	2E+06	1411181	2469150	2581650	2641650	2994150
3	2E+06	1411181	2469150	2581650	2641650	2994150
4	2E+06	1411181	2469150	2581650	2641650	2994150
5	2E+06	1411181	2469150	2581650	2641650	2994150
6	2E+06	1411181	2469150	2581650	2641650	2994150
7	2E+06	1411181	2469150	2581650	2641650	2994150
8	2E+06	1411181	2469150	2581650	2641650	2994150
9	2E+06	1411181	2469150	2581650	2641650	2994150
10	2E+06	1411181	2469150	2581650	2641650	2994150
11	2E+06			2581650	2641650	2994150
12	2E+06			2581650	2641650	2994150
13	2E+06			2581650	2641650	2994150
14	2E+06			2581650	2641650	2994150
15	2E+06			2581650	2641650	2994150
16	2E+06				2641650	2994150
17	2E+06				2641650	2994150
18	2E+06				2641650	2994150
19	2E+06				2641650	2994150
20	2E+06				2641650	2994150
21	2E+06					2994150
22	2E+06					2994150
23	2E+06					2994150
24	2E+06					2994150
25	2E+06					2994150

		Non-firm Capacity - baht/kWh			Firm Capacity - baht/kW/Mo Contract Terms (years)				
		Peak	Shoulder	Base	5-10	11-15	16-20	21-25	Energy
Case		0.87	0.65	0.55	100	115	123	170	0.69
low	0.25	595406	1556953	1317422	750000	862500	922500	1275000	3777750
med	0.5	1E+06	3113906	2634844	1500000	1725000	1845000	2550000	7555500
high	0.65	2E+06	4048078	3425297	1950000	2242500	2398500	3315000	9822150
$1 =	25.75	baht							

Rate of Return Worksheet: Medium Cost Case

Year	Costs	Contract Regime: Net Annual Cash Flow				
		Non-Firm	5-10	11-15	16-20	21-25
-1	13500000	-13500000	-13500000	-13500000	-13500000	-13500000
0	9500000	-9500000	-9500000	-9500000	-9500000	-9500000
1	2748450	4191113	6307050	6532050	6652050	7357050
2	2748450	4191113	6307050	6532050	6652050	7357050
3	2748450	4191113	6307050	6532050	6652050	7357050
4	2748450	4191113	6307050	6532050	6652050	7357050
5	2748450	4191113	6307050	6532050	6652050	7357050
6	2748450	4191113	6307050	6532050	6652050	7357050
7	2748450	4191113	6307050	6532050	6652050	7357050
8	2748450	4191113	6307050	6532050	6652050	7357050
9	2748450	4191113	6307050	6532050	6652050	7357050
10	2748450	4191113	6307050	6532050	6652050	7357050
11	2748450			6532050	6652050	7357050
12	2748450			6532050	6652050	7357050
13	2748450			6532050	6652050	7357050
14	2748450			6532050	6652050	7357050
15	2748450			6532050	6652050	7357050
16	2748450				6652050	7357050
17	2748450				6652050	7357050
18	2748450				6652050	7357050
19	2748450				6652050	7357050
20	2748450				6652050	7357050
21	2748450					7357050
22	2748450					7357050
23	2748450					7357050
24	2748450					7357050
25	2748450					7357050

Rate of Return Worksheet: Low Cost Case

Year	Costs	Contract Regime Net Annual Cash Flow				
		Non-Firm	5-10	11-15	16-20	21-25
-1	13500000	-13500000	-13500000	-13500000	-13500000	-13500000
0	9500000	-9500000	-9500000	-9500000	-9500000	-9500000
1	1779375	7242056	9992775	10285275	10441275	11357775
2	1779375	7242056	9992775	10285275	10441275	11357775
3	1779375	7242056	9992775	10285275	10441275	11357775
4	1779375	7242056	9992775	10285275	10441275	11357775
5	1779375	7242056	9992775	10285275	10441275	11357775
6	1779375	7242056	9992775	10285275	10441275	11357775
7	1779375	7242056	9992775	10285275	10441275	11357775
8	1779375	7242056	9992775	10285275	10441275	11357775
9	1779375	7242056	9992775	10285275	10441275	11357775
10	1779375	7242056	9992775	10285275	10441275	11357775
11	1779375			10285275	10441275	11357775
12	1779375			10285275	10441275	11357775
13	1779375			10285275	10441275	11357775
14	1779375			10285275	10441275	11357775
15	1779375			10285275	10441275	11357775
16	1779375				10441275	11357775
17	1779375				10441275	11357775
18	1779375				10441275	11357775
19	1779375				10441275	11357775
20	1779375				10441275	11357775
21	1779375					11357775
22	1779375					11357775
23	1779375					11357775
24	1779375					11357775
25	1779375					11357775

Rate of Return Analysis for Mill 3

Net Output (MW)
10

		Contract Regime			
	Non-Firm	5-10	11-15	16-20	21-25
Net Output (kWh/yr)					
High Cost 43,800,000					
IRR	-10.30%	-3.76%	-3.17%	-2.85%	-1.10%
NPV	-1.77E+08	-1.34E+08	-1.30E+08	-1.27E+08	-1.13E+08
Med. Cost 56,940,000					
IRR	-2.69%	3.58%	8.70%	10.67%	12.70%
NPV	-1.26E+08	-6.99E+07	-1.96E+07	1.24E+07	5.73E+07
Low Cost 65,700,000					
IRR	3.26%	9.28%	13.56%	15.09%	16.94%
NPV	-7.29E+07	-8.44E+06	5.77E+07	9.95E+07	1.54E+08

Discount rate = 10%

Rate of Return Worksheet: High Cost Case

Year	Costs	Contract Regime: Net Annual Cash Flow				
		Non-Firm	5-10	11-15	16-20	21-25
-1	1.32E+08	-1.32E+08	-1.32E+08	-1.32E+08	-1.32E+08	-1.32E+08
0	1.58E+08	-1.58E+08	-1.58E+08	-1.58E+08	-1.58E+08	-1.58E+08
1	1.33E+07	1.45E+07	2.30E+07	2.39E+07	2.43E+07	2.72E+07
2	1.33E+07	1.45E+07	2.30E+07	2.39E+07	2.43E+07	2.72E+07
3	1.33E+07	1.45E+07	2.30E+07	2.39E+07	2.43E+07	2.72E+07
4	1.33E+07	1.45E+07	2.30E+07	2.39E+07	2.43E+07	2.72E+07
5	1.33E+07	1.45E+07	2.30E+07	2.39E+07	2.43E+07	2.72E+07
6	1.33E+07	1.45E+07	2.30E+07	2.39E+07	2.43E+07	2.72E+07
7	1.33E+07	1.45E+07	2.30E+07	2.39E+07	2.43E+07	2.72E+07
8	1.33E+07	1.45E+07	2.30E+07	2.39E+07	2.43E+07	2.72E+07
9	1.33E+07	1.45E+07	2.30E+07	2.39E+07	2.43E+07	2.72E+07
10	1.33E+07	1.45E+07	2.30E+07	2.39E+07	2.43E+07	2.72E+07
11	1.33E+07			2.39E+07	2.43E+07	2.72E+07
12	1.33E+07			2.39E+07	2.43E+07	2.72E+07
13	1.33E+07			2.39E+07	2.43E+07	2.72E+07
14	1.33E+07			2.39E+07	2.43E+07	2.72E+07
15	1.33E+07			2.39E+07	2.43E+07	2.72E+07
16	1.33E+07				2.43E+07	2.72E+07
17	1.33E+07				2.43E+07	2.72E+07
18	1.33E+07				2.43E+07	2.72E+07
19	1.33E+07				2.43E+07	2.72E+07
20	1.33E+07				2.43E+07	2.72E+07
21	1.33E+07					2.72E+07
22	1.33E+07					2.72E+07
23	1.33E+07					2.72E+07
24	1.33E+07					2.72E+07
25	1.33E+07					2.72E+07

		Non-firm Capacity - baht/kWh			Firm Capacity - baht/kW/Mo Contract Terms (years)				
		Peak	Shoulder	Base	5-10	11-15	16-20	21-25	Energy
Case		0.87	0.65	0.55	110	115	123	170	0.69
low	0.5	4.76E+06	1.25E+07	1.05E+07	6.00E+06	6.90E+06	7.38E+06	1.02E+07	3.02E+07
med	0.65	6.19E+06	1.62E+07	1.37E+07	7.80E+06	8.97E+06	9.59E+06	1.33E+07	3.93E+07
high	0.75	7.14E+06	1.87E+07	1.58E+07	9.00E+06	1.04E+07	1.11E+07	1.53E+07	4.53E+07
$1 =	25.75 baht								

Rate of Return Worksheet: Medium Cost Case

Year	Costs	Contract Regime Net Annual Cash Flow Non-Firm	5-10	11-15	16-20	21-25
-1	1.32E+06	-1.32E+06	-1.32E+06	-1.32E+06	-1.32E+06	-1.32E+06
0	1.58E+06	-1.58E+06	-1.58E+06	-1.58E+06	-1.58E+06	-1.58E+06
1	1.15E+07	2.46E+07	3.56E+07	3.68E+07	3.74E+07	4.10E+07
2	1.15E+07	2.46E+07	3.56E+07	3.68E+07	3.74E+07	4.10E+07
3	1.15E+07	2.46E+07	3.56E+07	3.68E+07	3.74E+07	4.10E+07
4	1.15E+07	2.46E+07	3.56E+07	3.68E+07	3.74E+07	4.10E+07
5	1.15E+07	2.46E+07	3.56E+07	3.68E+07	3.74E+07	4.10E+07
6	1.15E+07	2.46E+07	3.56E+07	3.68E+07	3.74E+07	4.10E+07
7	1.15E+07	2.46E+07	3.56E+07	3.68E+07	3.74E+07	4.10E+07
8	1.15E+07	2.46E+07	3.56E+07	3.68E+07	3.74E+07	4.10E+07
9	1.15E+07	2.46E+07	3.56E+07	3.68E+07	3.74E+07	4.10E+07
10	1.15E+07	2.46E+07	3.56E+07	3.68E+07	3.74E+07	4.10E+07
11	1.15E+07			3.68E+07	3.74E+07	4.10E+07
12	1.15E+07			3.68E+07	3.74E+07	4.10E+07
13	1.15E+07			3.68E+07	3.74E+07	4.10E+07
14	1.15E+07			3.68E+07	3.74E+07	4.10E+07
15	1.15E+07			3.68E+07	3.74E+07	4.10E+07
16	1.15E+07				3.74E+07	4.10E+07
17	1.15E+07				3.74E+07	4.10E+07
18	1.15E+07				3.74E+07	4.10E+07
19	1.15E+07				3.74E+07	4.10E+07
20	1.15E+07				3.74E+07	4.10E+07
21	1.15E+07					4.10E+07
22	1.15E+07					4.10E+07
23	1.15E+07					4.10E+07
24	1.15E+07					4.10E+07
25	1.15E+07					4.10E+07

Rate of Return Worksheet: Low Cost Case

Year	Costs	Contract Regime Net Annual Cash Flow				
		Non-Firm	5-10	11-15	16-2	21-25
-1	1.32E+06	-1.32E+06	-1.32E+06	-1.32E+06	-1.32E	-1.32E+06
0	1.58E+06	-1.58E+06	-1.58E+06	-1.58E+06	-1.58E	-1.58E+06
1	6.64E+06	3.50E+07	4.77E+07	4.90E+07	4.98E	5.40E+07
2	6.64E+06	3.50E+07	4.77E+07	4.90E+07	4.98E	5.40E+07
3	6.64E+06	3.50E+07	4.77E+07	4.90E+07	4.98E	5.40E+07
4	6.64E+06	3.50E+07	4.77E+07	4.90E+07	4.98E	5.40E+07
5	6.64E+06	3.50E+07	4.77E+07	4.90E+07	4.98E	5.40E+07
6	6.64E+06	3.50E+07	4.77E+07	4.90E+07	4.98E	5.40E+07
7	6.64E+06	3.50E+07	4.77E+07	4.90E+07	4.98E	5.40E+07
8	6.64E+06	3.50E+07	4.77E+07	4.90E+07	4.98E	5.40E+07
9	6.64E+06	3.50E+07	4.77E+07	4.90E+07	4.98E	5.40E+07
10	6.64E+06	3.50E+07	4.77E+07	4.90E+07	4.98E	5.40E+07
11	6.64E+06			4.90E+07	4.98E	5.40E+07
12	6.64E+06			4.90E+07	4.98E+07	5.40E+07
13	6.64E+06			4.90E+07	4.98E+07	5.40E+07
14	6.64E+06			4.90E+07	4.98E+07	5.40E+07
15	6.64E+06			4.90E+07	4.98E+07	5.40E+07
16	6.64E+06				4.98E+07	5.40E+07
17	6.64E+06				4.98E+07	5.40E+07
18	6.64E+06				4.98E+07	5.40E+07
19	6.64E+06				4.98E+07	5.40E+07
20	6.64E+06				4.98E+07	5.40E+07
21	6.64E+06					5.40E+07
22	6.64E+06					5.40E+07
23	6.64E+06					5.40E+07
24	6.64E+06					5.40E+07
25	6.64E+06					5.40E+07

Rate of Return Analysis for Mill 3a

Net Output (MW)
10

		Contract Regime			
	Non-Firm	5-10	11-15	16-20	21-25
Net Output (kWh/yr)					
High Cost 43,800,000					
IRR	79.48%	109.86%	112.78%	114.31%	123.07%
NPV	6.37E+07	1.07E+08	1.11E+08	1.14E+08	1.28E+08
Med. Cost 56,940,000					
IRR	115.12%	147.09%	150.22%	151.86%	161.27%
NPV	1.15E+08	1.71E+08	2.21E+08	2.53E+08	2.98E+08
Low Cost 65,700,000					
IRR	145.51%	177.39%	180.54%	182.20%	191.73%
NPV	1.68E+08	2.32E+08	2.98E+08	3.40E+08	3.95E+08

Discount rate = 10%

Rate of Return Worksheet: High Cost Case

Year	Costs	Contract Regime: Net Annual Cash Flow				
		Non-Firm	5-10	11-15	16-20	21-25
-1	8.90E+06	-8.90E+06	-8.90E+06	-8.90E+06	-8.90E+06	-8.90E+06
0	2.20E+06	-2.20E+06	-2.20E+06	-2.20E+06	-2.20E+06	-2.20E+06
1	1.33E+07	1.45E+07	2.30E+07	2.39E+07	2.43E+07	2.72E+07
2	1.33E+07	1.45E+07	2.30E+07	2.39E+07	2.43E+07	2.72E+07
3	1.33E+07	1.45E+07	2.30E+07	2.39E+07	2.43E+07	2.72E+07
4	1.33E+07	1.45E+07	2.30E+07	2.39E+07	2.43E+07	2.72E+07
5	1.33E+07	1.45E+07	2.30E+07	2.39E+07	2.43E+07	2.72E+07
6	1.33E+07	1.45E+07	2.30E+07	2.39E+07	2.43E+07	2.72E+07
7	1.33E+07	1.45E+07	2.30E+07	2.39E+07	2.43E+07	2.72E+07
8	1.33E+07	1.45E+07	2.30E+07	2.39E+07	2.43E+07	2.72E+07
9	1.33E+07	1.45E+07	2.30E+07	2.39E+07	2.43E+07	2.72E+07
10	1.33E+07	1.45E+07	2.30E+07	2.39E+07	2.43E+07	2.72E+07
11	1.33E+07			2.39E+07	2.43E+07	2.72E+07
12	1.33E+07			2.39E+07	2.43E+07	2.72E+07
13	1.33E+07			2.39E+07	2.43E+07	2.72E+07
14	1.33E+07			2.39E+07	2.43E+07	2.72E+07
15	1.33E+07			2.39E+07	2.43E+07	2.72E+07
16	1.33E+07				2.43E+07	2.72E+07
17	1.33E+07				2.43E+07	2.72E+07
18	1.33E+07				2.43E+07	2.72E+07
19	1.33E+07				2.43E+07	2.72E+07
20	1.33E+07				2.43E+07	2.72E+07
21	1.33E+07					2.72E+07
22	1.33E+07					2.72E+07
23	1.33E+07					2.72E+07
24	1.33E+07					2.72E+07
25	1.33E+07					2.72E+07

		Non-firm Capacity - baht/kWh			Firm Capacity - baht/kW/Mo Contract Terms (years)				
		Peak	Shoulder	Base	5-10	11-15	16-20	21-25	Energy
Case		0.87	0.65	0.55	100	115	123	170	0.69
low	0.5	4.76E+06	1.25E+07	1.05E+07	6.00E+06	6.90E+06	7.38E+06	1.02E+07	3.02E+07
med	0.65	6.19E+06	1.62E+07	1.37E+07	7.80E+06	8.97E+06	9.59E+06	1.33E+07	3.93E+07
high	0.75	7.14E+06	1.87E+07	1.58E+07	9.00E+06	1.04E+07	1.11E+07	1.53E+07	4.53E+07

$1 = 25.75 baht

Rate of Return Worksheet: Medium Cost Case

Year	Costs	Contract Regime: Net Annual Cash Flow				
		Non-Firm	5-10	11-15	16-20	21-25
-1	8.90E+06	-8.90E+06	-8.90E+06	-8.90E+06	-8.90E+06	-8.90E+06
0	2.20E+06	-2.20E+06	-2.20E+06	-2.20E+06	-2.20E+06	-2.20E+06
1	1.15E+07	2.46E+07	3.56E+07	3.68E+07	3.74E+07	4.10E+07
2	1.15E+07	2.46E+07	3.56E+07	3.68E+07	3.74E+07	4.10E+07
3	1.15E+07	2.46E+07	3.56E+07	3.68E+07	3.74E+07	4.10E+07
4	1.15E+07	2.46E+07	3.56E+07	3.68E+07	3.74E+07	4.10E+07
5	1.15E+07	2.46E+07	3.56E+07	3.68E+07	3.74E+07	4.10E+07
6	1.15E+07	2.46E+07	3.56E+07	3.68E+07	3.74E+07	4.10E+07
7	1.15E+07	2.46E+07	3.56E+07	3.68E+07	3.74E+07	4.10E+07
8	1.15E+07	2.46E+07	3.56E+07	3.68E+07	3.74E+07	4.10E+07
9	1.15E+07	2.46E+07	3.56E+07	3.68E+07	3.74E+07	4.10E+07
10	1.15E+07	2.46E+07	3.56E+07	3.68E+07	3.74E+07	4.10E+07
11	1.15E+07			3.68E+07	3.74E+07	4.10E+07
12	1.15E+07			3.68E+07	3.74E+07	4.10E+07
13	1.15E+07			3.68E+07	3.74E+07	4.10E+07
14	1.15E+07			3.68E+07	3.74E+07	4.10E+07
15	1.15E+07			3.68E+07	3.74E+07	4.10E+07
16	1.15E+07				3.74E+07	4.10E+07
17	1.15E+07				3.74E+07	4.10E+07
18	1.15E+07				3.74E+07	4.10E+07
19	1.15E+07				3.74E+07	4.10E+07
20	1.15E+07				3.74E+07	4.10E+07
21	1.15E+07					4.10E+07
22	1.15E+07					4.10E+07
23	1.15E+07					4.10E+07
24	1.15E+07					4.10E+07
25	1.15E+07					4.10E+07

.94

Rate of Return Worksheet: Low Cost Case

Year	Costs	Contract Regime Net Annual Cash Flow				
		Non-Firm	5-10	11-15	16-20	21-25
-1	8.90E+06	-8.90E+06	-8.90E+06	-8.90E+06	-8.90E+06	-8.90E+06
0	2.20E+06	-2.20E+06	-2.20E+06	-2.20E+06	-2.20E+06	-2.20E+06
1	6.64E+06	3.50E+07	4.77E+07	4.90E+07	4.98E+07	5.40E+07
2	6.64E+06	3.50E+07	4.77E+07	4.90E+07	4.98E+07	5.40E+07
3	6.64E+06	3.50E+07	4.77E+07	4.90E+07	4.98E+07	5.40E+07
4	6.64E+06	3.50E+07	4.77E+07	4.90E+07	4.98E+07	5.40E+07
5	6.64E+06	3.50E+07	4.77E+07	4.90E+07	4.98E+07	5.40E+07
6	6.64E+06	3.50E+07	4.77E+07	4.90E+07	4.98E+07	5.40E+07
7	6.64E+06	3.50E+07	4.77E+07	4.90E+07	4.98E+07	5.40E+07
8	6.64E+06	3.50E+07	4.77E+07	4.90E+07	4.98E+07	5.40E+07
9	6.64E+06	3.50E+07	4.77E+07	4.90E+07	4.98E+07	5.40E+07
10	6.64E+06	3.50E+07	4.77E+07	4.90E+07	4.98E+07	5.40E+07
11	6.64E+06			4.90E+07	4.98E+07	5.40E+07
12	6.64E+06			4.90E+07	4.98E+07	5.40E+07
13	6.64E+06			4.90E+07	4.98E+07	5.40E+07
14	6.64E+06			4.90E+07	4.98E+07	5.40E+07
15	6.64E+06			4.90E+07	4.98E+07	5.40E+07
16	6.64E+06				4.98E+07	5.40E+07
17	6.64E+06				4.98E+07	5.40E+07
18	6.64E+06				4.98E+07	5.40E+07
19	6.64E+06				4.98E+07	5.40E+07
20	6.64E+06				4.98E+07	5.40E+07
21	6.64E+06					5.40E+07
22	6.64E+06					5.40E+07
23	6.64E+06					5.40E+07
24	6.64E+06					5.40E+07
25	6.64E+06					5.40E+07

Rate of Return Analysis for Mill 4

Net Output (MW)
25

		Contract Regime			
	Non-Firm	5-10	11-15	16-20	21-25
Net Output (kWh/yr)					
High Cost 109,500,000					
IRR	-10.13%	-4.55%	-4.03%	-3.76%	-2.22%
NPV	-5.23E+06	-4.16E+06	-4.04E+06	-3.98E+06	-3.63E+06
Med. Cost 142,350,000					
IRR	-3.85%	1.72%	7.09%	9.20%	11.18%
NPV	-4.00E+06	-2.61E+06	-1.27E+06	-4.24E+07	7.28E+07
Low Cost 164,250,000					
IRR	0.96%	6.42%	11.06%	12.78%	14.59%
NPV	-2.61E+06	-1.20E+06	4.95E+07	1.57E+08	2.96E+08

Discount rate = 10%

Rate of Return Worksheet: High Cost Case

Year	Costs	Contract Regime: Net Annual Cash Flow				
		Non-Firm	5-10	11-15	16-20	21-25
-1	3.90E+08	-3.90E+08	-3.90E+08	-3.90E+08	-3.90E+08	-3.90E+08
0	4.73E+08	-4.73E+08	-4.73E+08	-4.73E+08	-4.73E+08	-4.73E+08
1	2.57E+07	4.37E+07	6.48E+07	6.71E+07	6.83E+07	7.53E+07
2	2.57E+07	4.37E+07	6.48E+07	6.71E+07	6.83E+07	7.53E+07
3	2.57E+07	4.37E+07	6.48E+07	6.71E+07	6.83E+07	7.53E+07
4	2.57E+07	4.37E+07	6.48E+07	6.71E+07	6.83E+07	7.53E+07
5	2.57E+07	4.37E+07	6.48E+07	6.71E+07	6.83E+07	7.53E+07
6	2.57E+07	4.37E+07	6.48E+07	6.71E+07	6.83E+07	7.53E+07
7	2.57E+07	4.37E+07	6.48E+07	6.71E+07	6.83E+07	7.53E+07
8	2.57E+07	4.37E+07	6.48E+07	6.71E+07	6.83E+07	7.53E+07
9	2.57E+07	4.37E+07	6.48E+07	6.71E+07	6.83E+07	7.53E+07
10	2.57E+07	4.37E+07	6.48E+07	6.71E+07	6.83E+07	7.53E+07
11	2.57E+07			6.71E+07	6.83E+07	7.53E+07
12	2.57E+07			6.71E+07	6.83E+07	7.53E+07
13	2.57E+07			6.71E+07	6.83E+07	7.53E+07
14	2.57E+07			6.71E+07	6.83E+07	7.53E+07
15	2.57E+07			6.71E+07	6.83E+07	7.53E+07
16	2.57E+07				6.83E+07	7.53E+07
17	2.57E+07				6.83E+07	7.53E+07
18	2.57E+07				6.83E+07	7.53E+07
19	2.57E+07				6.83E+07	7.53E+07
20	2.57E+07				6.83E+07	7.53E+07
21	2.57E+07					7.53E+07
22	2.57E+07					7.53E+07
23	2.57E+07					7.53E+07
24	2.57E+07					7.53E+07
25	2.57E+07					7.53E+07

		Non-firm Capacity - baht/kWh			Firm Capacity - baht/kW/Mo Contract Terms (years)				
		Peak	Shoulder	Base	5-10	11-15	16-20	21-25	Energy
Case		0.87	0.65	0.55	100	115	123	170	0.69
low	0.5	1.19E+07	3.11E+07	2.63E+07	1.50E+07	1.73E+07	1.85E+07	2.55E+07	7.56E+07
med	0.65	1.55E+07	4.05E+07	3.43E+07	1.95E+07	2.24E+07	2.40E+07	3.32E+07	9.82E+07
high	0.75	1.79E+07	4.67E+07	3.95E+07	2.25E+07	2.59E+07	2.77E+07	3.83E+07	1.13E+08

$1 = 25.75 baht

91

Rate of Return Worksheet: Medium Cost Case

Year	Costs	Contract Regime Net Annual Cash Flow				
		Non-Firm	5-10	11-15	16-20	21-25
-1	3.90E+08	-3.90E+08	-3.90E+08	-3.90E+08	-3.90E+08	-3.90E+08
0	4.73E+08	-4.73E+08	-4.73E+08	-4.73E+08	-4.73E+08	-4.73E+08
1	2.23E+07	6.79E+07	9.54E+07	9.83E+07	9.99E+07	1.09E+08
2	2.23E+07	6.79E+07	9.54E+07	9.83E+07	9.99E+07	1.09E+08
3	2.23E+07	6.79E+07	9.54E+07	9.83E+07	9.99E+07	1.09E+08
4	2.23E+07	6.79E+07	9.54E+07	9.83E+07	9.99E+07	1.09E+08
5	2.23E+07	6.79E+07	9.54E+07	9.83E+07	9.99E+07	1.09E+08
6	2.23E+07	6.79E+07	9.54E+07	9.83E+07	9.99E+07	1.09E+08
7	2.23E+07	6.79E+07	9.54E+07	9.83E+07	9.99E+07	1.09E+08
8	2.23E+07	6.79E+07	9.54E+07	9.83E+07	9.99E+07	1.09E+08
9	2.23E+07	6.79E+07	9.54E+07	9.83E+07	9.99E+07	1.09E+08
10	2.23E+07	6.79E+07	9.54E+07	9.83E+07	9.99E+07	1.09E+08
11	2.23E+07			9.83E+07	9.99E+07	1.09E+08
12	2.23E+07			9.83E+07	9.99E+07	1.09E+08
13	2.23E+07			9.83E+07	9.99E+07	1.09E+08
14	2.23E+07			9.83E+07	9.99E+07	1.09E+08
15	2.23E+07			9.83E+07	9.99E+07	1.09E+08
16	2.23E+07				9.99E+07	1.09E+08
17	2.23E+07				9.99E+07	1.09E+08
18	2.23E+07				9.99E+07	1.09E+08
19	2.23E+07				9.99E+07	1.09E+08
20	2.23E+07				9.99E+07	1.09E+08
21	2.23E+07					1.09E+08
22	2.23E+07					1.09E+08
23	2.23E+07					1.09E+08
24	2.23E+07					1.09E+08
25	2.23E+07					1.09E+08

Rate of Return Worksheet: Low Cost Case

Year	Costs	Contract Regime Net Annual Cash Flow				
		Non-Firm	5-10	11-15	16-20	21-25
-1	3.90E+08	-3.90E+08	-3.90E+08	-3.90E+08	-3.90E+08	-3.90E+08
0	4.73E+08	-4.73E+08	-4.73E+08	-4.73E+08	-4.73E+08	-4.73E+08
1	1.28E+07	9.13E+07	1.23E+08	1.26E+08	1.28E+08	1.39E+08
2	1.28E+07	9.13E+07	1.23E+08	1.26E+08	1.28E+08	1.39E+08
3	1.28E+07	9.13E+07	1.23E+08	1.26E+08	1.28E+08	1.39E+08
4	1.28E+07	9.13E+07	1.23E+08	1.26E+08	1.28E+08	1.39E+08
5	1.28E+07	9.13E+07	1.23E+08	1.26E+08	1.28E+08	1.39E+08
6	1.28E+07	9.13E+07	1.23E+08	1.26E+08	1.28E+08	1.39E+08
7	1.28E+07	9.13E+07	1.23E+08	1.26E+08	1.28E+08	1.39E+08
8	1.28E+07	9.13E+07	1.23E+08	1.26E+08	1.28E+08	1.39E+08
9	1.28E+07	9.13E+07	1.23E+08	1.26E+08	1.28E+08	1.39E+08
10	1.28E+07	9.13E+07	1.23E+08	1.26E+08	1.28E+08	1.39E+08
11	1.28E+07			1.26E+08	1.28E+08	1.39E+08
12	1.28E+07			1.26E+08	1.28E+08	1.39E+08
13	1.28E+07			1.26E+08	1.28E+08	1.39E+08
14	1.28E+07			1.26E+08	1.28E+08	1.39E+08
15	1.28E+07			1.26E+08	1.28E+08	1.39E+08
16	1.28E+07				1.28E+08	1.39E+08
17	1.28E+07				1.28E+08	1.39E+08
18	1.28E+07				1.28E+08	1.39E+08
19	1.28E+07				1.28E+08	1.39E+08
20	1.28E+07				1.28E+08	1.39E+08
21	1.28E+07					1.39E+08
22	1.28E+07					1.39E+08
23	1.28E+07					1.39E+08
24	1.28E+07					1.39E+08
25	1.28E+07					1.39E+08

Rate of Return Analysis for Mill 4a

Net Output (MW)
25

		Contract Regime			
	Non-Firm	5-10	11-15	16-20	21-25
Net Output (kWh/yr)					
High Cost 109,500,000					
IRR	172.35%	221.04%	225.75%	228.22%	242.38%
NPV	2.12E+06	3.19E+06	3.31E+06	3.37E+06	3.73E+06
Med. Cost 142,350,000					
IRR	227.39%	279.52%	284.61%	287.29%	302.68%
NPV	3.35E+06	4.74E+06	6.06E+06	6.93E+06	8.08E+06
Low Cost 164,250,000					
IRR	272.27%	325.01%	330.21%	332.93%	348.72%
NPV	4.54E+06	6.15E+06	7.85E+06	8.92E+06	1.03E+09

Discount rate = 10%

Rate of Return Worksheet: High Cost Case

Year	Costs	Contract Regime: Net Annual Cash Flow				
		Non-Firm	5-10	11-15	16-20	21-25
-1	8.20E+06	-8.20E+06	-8.20E+06	-8.20E+06	-8.20E+06	-8.20E+06
0	3.00E+06	-3.00E+06	-3.00E+06	-3.00E+06	-3.00E+06	-3.00E+06
1	2.57E+07	4.37E+07	6.48E+07	6.71E+07	6.83E+07	7.53E+07
2	2.57E+07	4.37E+07	6.48E+07	6.71E+07	6.83E+07	7.53E+07
3	2.57E+07	4.37E+07	6.48E+07	6.71E+07	6.83E+07	7.53E+07
4	2.57E+07	4.37E+07	6.48E+07	6.71E+07	6.83E+07	7.53E+07
5	2.57E+07	4.37E+07	6.48E+07	6.71E+07	6.83E+07	7.53E+07
6	2.57E+07	4.37E+07	6.48E+07	6.71E+07	6.83E+07	7.53E+07
7	2.57E+07	4.37E+07	6.48E+07	6.71E+07	6.83E+07	7.53E+07
8	2.57E+07	4.37E+07	6.48E+07	6.71E+07	6.83E+07	7.53E+07
9	2.57E+07	4.37E+07	6.48E+07	6.71E+07	6.83E+07	7.53E+07
10	2.57E+07	4.37E+07	6.48E+07	6.71E+07	6.83E+07	7.53E+07
11	2.57E+07			6.71E+07	6.83E+07	7.53E+07
12	2.57E+07			6.71E+07	6.83E+07	7.53E+07
13	2.57E+07			6.71E+07	6.83E+07	7.53E+07
14	2.57E+07			6.71E+07	6.83E+07	7.53E+07
15	2.57E+07			6.71E+07	6.83E+07	7.53E+07
16	2.57E+07				6.83E+07	7.53E+07
17	2.57E+07				6.83E+07	7.53E+07
18	2.57E+07				6.83E+07	7.53E+07
19	2.57E+07				6.83E+07	7.53E+07
20	2.57E+07				6.83E+07	7.53E+07
21	2.57E+07					7.53E+07
22	2.57E+07					7.53E+07
23	2.57E+07					7.53E+07
24	2.57E+07					7.53E+07
25	2.57E+07					7.53E+07

		Non-firm Capacity - baht/kWh			Firm Capacity - baht/kW/Mo Contract Terms (years)				
		Peak	Shoulder	Base	5-10	11-15	16-20	21-25	Energy
Case		0.87	0.65	0.55	100	115	123	170	0.69
low	0.5	1.19E+07	3.11E+07	2.63E+07	1.50E+07	1.73E+07	1.85E+07	2.55E+07	7.56E+07
med	0.65	1.55E+07	4.05E+07	3.43E+07	1.95E+07	2.24E+07	2.40E+07	3.32E+07	9.82E+07
high	0.75	1.79E+07	4.67E+07	3.95E+07	2.25E+07	2.59E+07	2.77E+07	3.83E+07	1.13E+08

$1 = 25.75 baht

Rate of Return Worksheet: Medium Cost Case

Year	Costs	Contract Regime Net Annual Cash Flow				
		Non-Firm	5-10	11-15	16-20	21-25
-1	8.20E+06	-8.20E+06	-8.20E+06	-8.20E+06	-8.20E+06	-8.20E+06
0	3.00E+06	-3.00E+06	-3.00E+06	-3.00E+06	-3.00E+06	-3.00E+06
1	2.23E+07	6.79E+07	9.54E+07	9.83E+07	9.99E+07	1.09E+08
2	2.23E+07	6.79E+07	9.54E+07	9.83E+07	9.99E+07	1.09E+08
3	2.23E+07	6.79E+07	9.54E+07	9.83E+07	9.99E+07	1.09E+08
4	2.23E+07	6.79E+07	9.54E+07	9.83E+07	9.99E+07	1.09E+08
5	2.23E+07	6.79E+07	9.54E+07	9.83E+07	9.99E+07	1.09E+08
6	2.23E+07	6.79E+07	9.54E+07	9.83E+07	9.99E+07	1.09E+08
7	2.23E+07	6.79E+07	9.54E+07	9.83E+07	9.99E+07	1.09E+08
8	2.23E+07	6.79E+07	9.54E+07	9.83E+07	9.99E+07	1.09E+08
9	2.23E+07	6.79E+07	9.54E+07	9.83E+07	9.99E+07	1.09E+08
10	2.23E+07	6.79E+07	9.54E+07	9.83E+07	9.99E+07	1.09E+08
11	2.23E+07			9.83E+07	9.99E+07	1.09E+08
12	2.23E+07			9.83E+07	9.99E+07	1.09E+08
13	2.23E+07			9.83E+07	9.99E+07	1.09E+08
14	2.23E+07			9.83E+07	9.99E+07	1.09E+08
15	2.23E+07			9.83E+07	9.99E+07	1.09E+08
16	2.23E+07				9.99E+07	1.09E+08
17	2.23E+07				9.99E+07	1.09E+08
18	2.23E+07				9.99E+07	1.09E+08
19	2.23E+07				9.99E+07	1.09E+08
20	2.23E+07				9.99E+07	1.09E+08
21	2.23E+07					1.09E+08
22	2.23E+07					1.09E+08
23	2.23E+07					1.09E+08
24	2.23E+07					1.09E+08
25	2.23E+07					1.09E+08

Rate of Return Worksheet: Low Cost Case

Year	Costs	Contract Regime Net Annual Cash Flow				
		Non-Firm	5-10	11-15	16-20	21-25
-1	8.20E+06	-8.20E+06	-8.20E+06	-8.20E+06	-8.20E+06	-8.20E+06
0	3.00E+06	-3.00E+06	-3.00E+06	-3.00E+06	-3.00E+06	-3.00E+06
1	1.28E+07	9.13E+07	1.23E+08	1.26E+08	1.28E+08	1.39E+08
2	1.28E+07	9.13E+07	1.23E+08	1.26E+08	1.28E+08	1.39E+08
3	1.28E+07	9.13E+07	1.23E+08	1.26E+08	1.28E+08	1.39E+08
4	1.28E+07	9.13E+07	1.23E+08	1.26E+08	1.28E+08	1.39E+08
5	1.28E+07	9.13E+07	1.23E+08	1.26E+08	1.28E+08	1.39E+08
6	1.28E+07	9.13E+07	1.23E+08	1.26E+08	1.28E+08	1.39E+08
7	1.28E+07	9.13E+07	1.23E+08	1.26E+08	1.28E+08	1.39E+08
8	1.28E+07	9.13E+07	1.23E+08	1.26E+08	1.28E+08	1.39E+08
9	1.28E+07	9.13E+07	1.23E+08	1.26E+08	1.28E+08	1.39E+08
10	1.28E+07	9.13E+07	1.23E+08	1.26E+08	1.28E+08	1.39E+08
11	1.28E+07			1.26E+08	1.28E+08	1.39E+08
12	1.28E+07			1.26E+08	1.28E+08	1.39E+08
13	1.28E+07			1.26E+08	1.28E+08	1.39E+08
14	1.28E+07			1.26E+08	1.28E+08	1.39E+08
15	1.28E+07			1.26E+08	1.28E+08	1.39E+08
16	1.28E+07				1.28E+08	1.39E+08
17	1.28E+07				1.28E+08	1.39E+08
18	1.28E+07				1.28E+08	1.39E+08
19	1.28E+07				1.28E+08	1.39E+08
20	1.28E+07				1.28E+08	1.39E+08
21	1.28E+07					1.39E+08
22	1.28E+07					1.39E+08
23	1.28E+07					1.39E+08
24	1.28E+07					1.39E+08
25	1.28E+07					1.39E+08

Annex 3: Sugar Factory Case Studies and Electrical Schematics

3.1 Kam Pang Petch Factory

3.1.1 Factory Description and Production Statistics

a) Production Statistics - 1988-1989

868,000	TC/YR
256.7	TC/HR Avg Production Rates
3,775.6	Gross Production Hours/Yr (157 days)
3,382.7	Net Production Hours/Yr (141 days)
40.85	Hours - Mid Season Cleanup (1.1% of gross)
352.02	Hours - Lost Time (9.3% of gross)
89.6%	Grind Time Eff., net/gross (7.9% no cane)
66,611	Tons Raw Sugar
20,822	Tons White Sugar
87,433	Tons Total Sugar
9.92	TC/TS
265,354	Tons Bagasse
50.835%	Moisture Bagasse
2.564%	Pol Bagasse
42.127%	Imb./Cane
14.89	MJ Bx
77.37	MJ Pty.
3.77	CJ Bx
77.78	CJ Pty.
63.2	Syrup Bx
16,200,000	kwh Generated
15,844	Ton/Yr Surplus Bagasse

b) Factory Description

- Factory operates from December through April. One midcrop shutdown of approximately 40 hours is taken for equipment cleaning and maintenance.
- Out of a capability to produce 155 tons per hour of steam, the factory utilizes approximately 122 T/hr. of which 114 T/hr. passes through turbogenerators or mechanical drive turbines and 8 T/hr. passes through a pressure reducing valve to provide process steam to the evaporators.
- Internal electric power consumption is reported to be 4,400 kw out of a total generating capacity of 6,000 kw.

- Surplus bagasse for 1988-90 was estimated at 15,844 tons, or 6% of total bagasse.

3.1.2 Facility Description

a) Mills - 36" dia. x 64" wide - 5 mills, each with underfeed force feed roll. Individual turbine drives - 3 - 15kg/cm^2 - 2 - 22kg/cm^2

b) Shredder - Turbine Drive 22kg/cm^2

c) Knives - 3 sets, one electric motor drives, two steam drives 15kg/cm^2

d) Evaporators - 4 sets, quadruple effect, vapor bleed for heating and pan boiling.

e) Boilers - 1 - 20 T/Hr., 15kg/cm^2, 350°C

1 - 40 T/Hr., 22kg/cm^2, 350°C

1 - 45 T/Hr., 22kg/cm^2, 350°C

1 - 50 T/Hr., 15kg/cm^2, 350°C

Total = 155 Tons

f) Turbogenerators

1 - 3500 kw at 0.8 PF, 22/kg/cm^2, 1kg/cm^2 exhaust, 200°C exhaust, 3300v.

1 - 2500 kw at 0.8 PF, 22kg/cm^2, 1kg/cm^2 exhaust, 170°C exhaust, 3300v.

Tie Transformer - 1000 kva, 22kv/400v, 3 phase, 50 HZ.

g) Equipment is 10-20 years old.

h) Cooling System - Ponds - static-max. temp ~ 41°C (106°F).

3.1.3 Export Capability

a) Option 1 - Near Term

While processing, the practical maximum export is 1,000 kw with no modifications to factory equipment. This will force the existing pressure reducing value closed (8 T/Hr) generating an additional 700 kw through the 2500 kw turbogenerator. The additional 300 kw would have to be obtained by wasting exhaust steam either to the evaporators or to atmosphere (5.6 T/Hr.). The average

a5

net heat rate of 27,523 BTU/KWH would consume an additional 3.1 T/Hr., or 12,000 tons of the predicted annual surplus of 15,844 tons. The boiler steam production would rise by 5.6 T/Hr. from the current 122 T/Hr. to 127.6 T/Hr., which is within the rated total capacity of 155 T/Hr. for the boilers.

Total export would be 3,778,000 kwh.

b) Option 2.

The addition of a central dearating feedwater heater would absorb additional turbogenerator exhaust while processing and improve the overall cycle efficiency sufficiently to create and annual quantity of surplus bagasse of 40,000 tons. This would permit off season export of 655 kw or more, depending on which turbogenerator is used. One evaporator train would be independently piped up for condensing during the off season.

The 3,500 kw turbogenerator appears to have an unusually poor heat rate (18.5 kg/kwh) which may be due to internal deposits, wear, or design. It is this machine which raises the heat rate of bagasse from a normal 40,000 BTU/KWH to 80,000 BTU/KWH.

Total export would be 6,400,000 kwh/yr.

c) Option 3

The addition of a stand-alone boiler and turbine generator, a central dearating feedwater heater and the sending of all process exhaust condensates to the dearating feedwater heater coupled with excess air improvements on existing boilers, would effectively raise surplus bagasse quantities to 46,000 tons/year, permitting an average export of 2,500 kw for 11 months per year.

Total export would be 20,000,000 kwh/yr.

d) Option 4

The use of a single high pressure boiler to replace some of the existing boilers and the use of an extracting/condensing turbogenerator would effectively raise surplus bagasse quantities to 78,000 tons per year.

Process season export would be 5,000 kw and off season export would be 7,800 kw.

Total export would be 52,000,000 kwh per year.

qv

3.1.4 Conclusions

The Kam Pang Petch sugar factory is a good candidate for export electric energy sales. some parts of the facility need efficiency improvements. These include:

a) Central deaerator

b) Convert evaporators to five effects

c) Additional heat recovery on existing boilers

d) Improve heat rate of the 3,500 kw turbogenerator

3.2 Thai Identity Factory

3.2.1 Factory Description And Production Statistics

a) Production Statistics-1988-1989

1,721,260	Tons Cane
530.5	Tons/hr. Ave Production Rate
4,008.1	Gross Production Hours (167 days)
3,244.3	Net Production Hours
227.8	Hrs. Evaporator Cleaning
369.7	Hrs.- No Cane
166.3	Hrs.- Factory Lost Time
80.9%	Grind Time Eff.
102,846	Tons Raw Sugar
89,181	Tons White Sugar
192,027	Tons Total Sugar
8.96	TC/TS
480,662	Tons Bagasse
50.01%	Moisture,Bagasse
1.44%	Pol, Bagasse
12.97%	Pol, Cane
13.37%	Fiber, Cane
14.68%	Bx., Mixed Juice
80.44%	Pty., Mixed Juice
55.94%	Bx., Syrup
32,912,100	kwh, Generated
50,000	Tons, Surplus Bagasse (30,000-40,000 Required for refining.)

b) Factory Description

Factory operated from Dec. 8 to Apr. 16, however would prefer to shorten season to 132 days. Stoppages for evaporator cleaning are made several times throughout the season due to limited evaporator capacity.

Steam is produced at a rate of 280-300 T/hr while processing cane, and 80-90 T/hr during off season refining. Total steam capacity is 370 T/hr.

Clarification is by carbonation.

There is no reported venting of steam or use of pressure reducing valves during cane processing, however, steam is vented during evaporator cleaning.

Surplus bagasse of 10,000-20,000 Tons was reported for 1988-1989, however in prior years, at lower processing rates, surplus was essentially zero.

Normal electrical load while processing cane is reported to be 11,500 kw. During off season, demand from PEA is 500 kw.

3.2.2 Facility Description

a) Mills- 42"X80"-90"-6 mills total

#1-45"X90",2000 hp drive
#2-#5-42"X80",1200 hp drive each
#6-42"X80", 1800 hp drive
Mills 1 and 6 have h.d. pressure feeders
Mills 2-5 have underfeed rolls
All mill drives-18kg/cm^2

b) Shredder-4000 hp,18kg/cm^2

c) Knives
2 x 675 hp-18kg/cm^2
1 Electric motor

d) Evaporators-operate at 1.5 kg/cm^2
2 #1 cells
1 #2 cell
2 #3 cells
2 #4 cells
1 #5 cell
Pans use first vapors

e) Boilers

5 x50 T/hr, 19-20 kg/cm^2, 360-380°C
1 x 20 T/hr, 19-20 kg/cm^2, 360-380°C
Exit gas, 1-5 = 11% CO^2, 230-240°C

95

Exit gas, 6 = 14.15% CO^2, 230-240°C
Boilers 1-5 installed 1974, boiler 6 installed 1984. All boilers have air heaters, dump grates, water walls with refractory lining, and are equipped to burn oil.

f) Turbogenerators
3-2,500 kw
1-5,000 kw
All are .8 p.f., 3,300v., 18 kg/cm^2, 320°C, 1.5 kg/cm^2 backpressure.

g) Tie Transformer
Three, single phase, 3,300 kva each, 3,300v/22,000v.

h) Cooling System-ponds, static, max. temp. 30°C.

3.2.3 Export Capability

a) Option 1

A practical export limit is 1,000 kw, limited by the available excess turbogenerator capacity. Additional dilution of juice is required to force the evaporators to absorb the additional exhaust steam produced since the turbogenerators lack condensing capability.

Alternatively, several vacuum pans could be shifted from vapor to exhaust steam. If export is practiced throughout the processing season, 10,000-15,000 tons of surplus bagasse would be consumed and 4,000,000 kwh would be exported.

b) Option 2

Estimated surplus bagasse of 10,000-20,000 tons/yr. could most likely be increased to 40,000 tons/yr. by reducing excess air on boilers 1-5, improving their efficiency by 5 percentage points. One 50-Ton boiler and one 2,500 kw generator would be used during the off season. An air condenser would be required to condense steam during the off season. Export would be 1,000 kw while processing and 1,600 kw during off season. Total annual export would be 10,000,000 kwh.

c) Option 3

A stand alone boiler and turbogenerator, economizers and revised air heaters on the existing boilers, and a central dearating feedwater heater for the existing boilers would raise the level of surplus bagasse which can be used for export of electric energy to 80,000 tons per year. Export would average 4,200 kw., for a total of 33,600,000 kwh per year.

d) Option 4

Process changes for Option 4 are the same as for Option 3. The existing 120 T/hr boiler or several 50 T/hr boilers would not be required for operation. Average export would be 7,800 kw, for a total of 62,000,000 kwh per year.

3.2.4 Conclusions

This factory has a significant potential to export electric energy. This can be accomplished primarily by virtue of improving existing boiler heat recovery. Additionally, a review of evaporator and cooling pond performance may also significantly reduce process steam demand.

3.3 United Farmers Factory

3.3.1 Factory Research And Production Statistics

a) Production Statistics 1988-1989

2,134,000	Tons Cane
595.4	Tons/hr Avg Production Rate
4,234	Gross Production Hours (176 days)
3,583	Net Production Hours
146	Hours - Evaporator Cleaning
289	Hours - No Cane
87.6%	Grind Time Eff, Net/Gross
89,198	Tons Raw Sugar
145,902	Tons White and Refined Sugar
235,100	Tons Total Sugar
9.08	TC/TS
608,400	Tons Bagasse
50.84%	Moist Bagasse
1.62%	Pol Bagasse
13.09%	Pol Cane
13.34%	Fiber Cane
16.01%	Mixed Juice Brix
79.00%	Mixed Juice Pty
14.14%	Cl. Juice Brix
54.87%	Syrup Brix
34,650,650	Kwh generated
100,000	Tons Surplus Bagasse Estimated

b) Factory Description

Factory operated from the last week of November until May 18. Shutdown to clean evaporators occurs twice each season and at the end of the season for 48 hours.

Steam is produced at the rate of 300 Tons/Hr. out of an installed capacity of 360 Tons/hr. Two 12,500 kw turbogenerators are operated simultaneously to sustain an average load of 9,000 kw.

It is anticipated that steam load will rise to 340 Ton/Hr in the coming campaign and that an additional 120 Ton/Hr. boiler will be installed in the near future.

Surplus bagasse estimated to be 100,000 Ton/Yr. may be affected by changes in refining activities.

The entire factory was recently built and is approximately 4 years old.

3.3.2 Facility Description

a) Mills - 45" diameter x 90" long.
6 mills total.
All with heavy duty pressure feeders.
Turbine drives, 1265 kw, 30 kg/cm^2 with 1.5 kg/cm^2 exhaust.

b) Shredder - 3350 kw steam turbine.

c) Knives
#1 - 1265 kw turbine.
#2 - 1680 kw turbine.

d) Evaporators
5 - #1 cells
2 - #2 cells
2 - #3 cells
2 - #4 cells
2 - #5 cells
Adding 1 = #2, 1 - #4 and 1 - #5 cells this year.
Some pans are on exhaust steam while others are on first vapors.

e) Boilers
3 - 120 T/hr.
30 kg/cm2 at 370°C
Traveling grates
CO2 - 12-16% (14.5% predicted)
Water walls, refractory lined
Furnace volume = 690 cubic meter
Exit Gas - 190°C.
Plans to install one duplicate 120 Ton/Hr. duplicate unit.

All boilers have air heaters.
Oil capability on all units - 60 Ton/Hr. each.

f) Turbogenerators
Two 12000 kw units, 29 kg/cm^2, 360°C throttle, 1.5 kg/cm^2 exhaust.
Ton/Hr. Steam = 19.8 x 1,000 + 6.818 KW (per Manufacturer))
11,000 Volts

g) Tie Transformer
The current transformer is 1500 kva, 11,000/22,000 volts.

h) Cooling System - Spray ponds - 40°C Max.

3.3.3 Export Capability

a) Option 1

Export is limited to the capacity of the existing tie transformer. A 1,000 kw export can be sustained during processing. Additional dilution or shifting of vacuum pans from vapors to exhaust steam may be required to absorb the additional steam required for export.

However, if the two 12,000 kw units are normally operated to service in-house loads of 9,000 kw as reported, this may not be necessary, since a single machine operating at 10,000 kw would consume 193,600 #/Hr. (88 T/Hr.) while two machines operating at 4,500 kw each require 222,000 #/Hr. (101 T/Hr.).

Total export would be 4,000,000 kwh/Yr.

b) Option 2

One possible scenario for this option would be to export 3,722 kw while processing and 5,000 kw during off season. Off season export hours would be limited to 1,637 hours out of a total 4,000 hours. This would consume all of the current 100,000 tons of surplus bagasse.

Due to the fairly high heat rate of these large turbogenerators at low loads, the off season heat rate exceeds 52,000 BTU/kwh. The grinding season heat rate, however, is approximately 29,000 BTU/kwh, assuming the exhaust steam does no useful work. Due to the relatively short off season generation, the existing evaporator set can most likely be used for condensing exhaust steam.

Total export = 23,079,000 kwh/yr.

c.) Option 3

As in the case of other factories, this option presumes a 5,000 kw, stand alone boiler and turbogenerator. For this factory, with 100,000 tons of surplus bagasse annually, no further process revisions are needed to produce a 5,362 kw export during processing as well as during off season.

Annual export would be 40,000,000 kwh.

d) Option 4

The addition of a 150 Ton/Hr. high pressure boiler and extracting/condensing turbogenerator would result in exporting 10,000 kw, average, while processing and 13,400 kw, average, during the off season. All of the existing 100,000 tons of surplus bagasse would be consumed.

Economizers and air heater modifications would be required on existing boilers. Maximum condensate heat recovery would be required and, to the extent possible, all vacuum pans shifted to first vapors.

Export energy would be 93,600,000 kwh/yr.

3.3.4 Conclusion

Should export electric energy be considered by this factory, careful consideration should be given to modifying and re-use of the existing three boilers and the proposed new 120 T/Hr. unit since they are new, in good condition, well maintained and operated, and appear to be conservatively sized.

In addition, both 12,000 kw turbogenerators are currently operated to provide the necessary process steam. Significant export would result from using a single machine. Raising the main steam temperature to 440°C on the new boiler and installing a dedicated steam line to a new condensing extracting turbogenerator would accomplish much of the same results as Option 4 at a greatly reduced cost.

Annex 4: Electrical Schematics

Annex 4.1: Typical Interconnections for Export from Sugar Factories

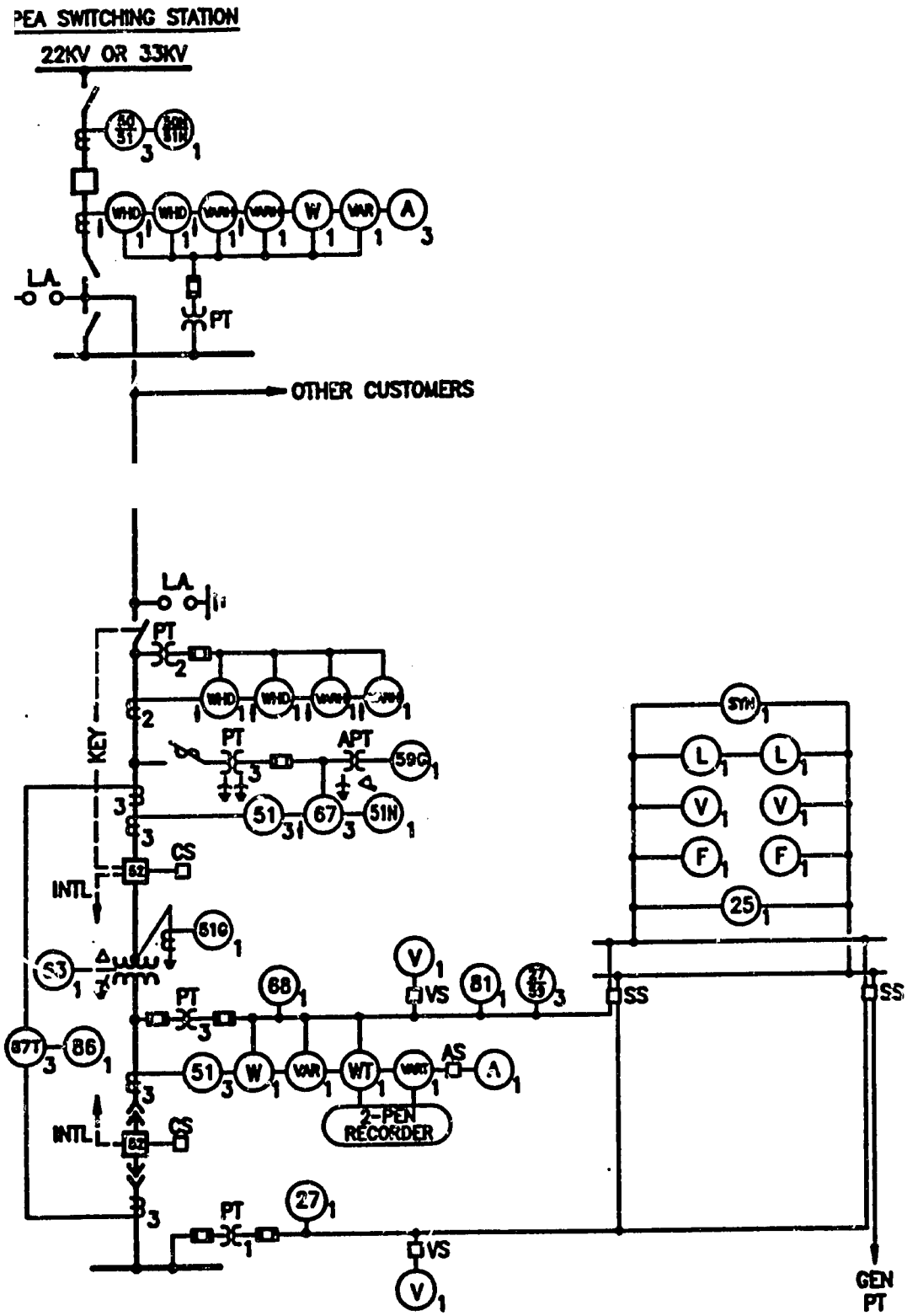

TYPICAL INTERCONNECTION FOR EXPORT FROM SUGAR FACTORIES
WITH DELTA CONNECTED PRIMARY TIE TRANSFORMER

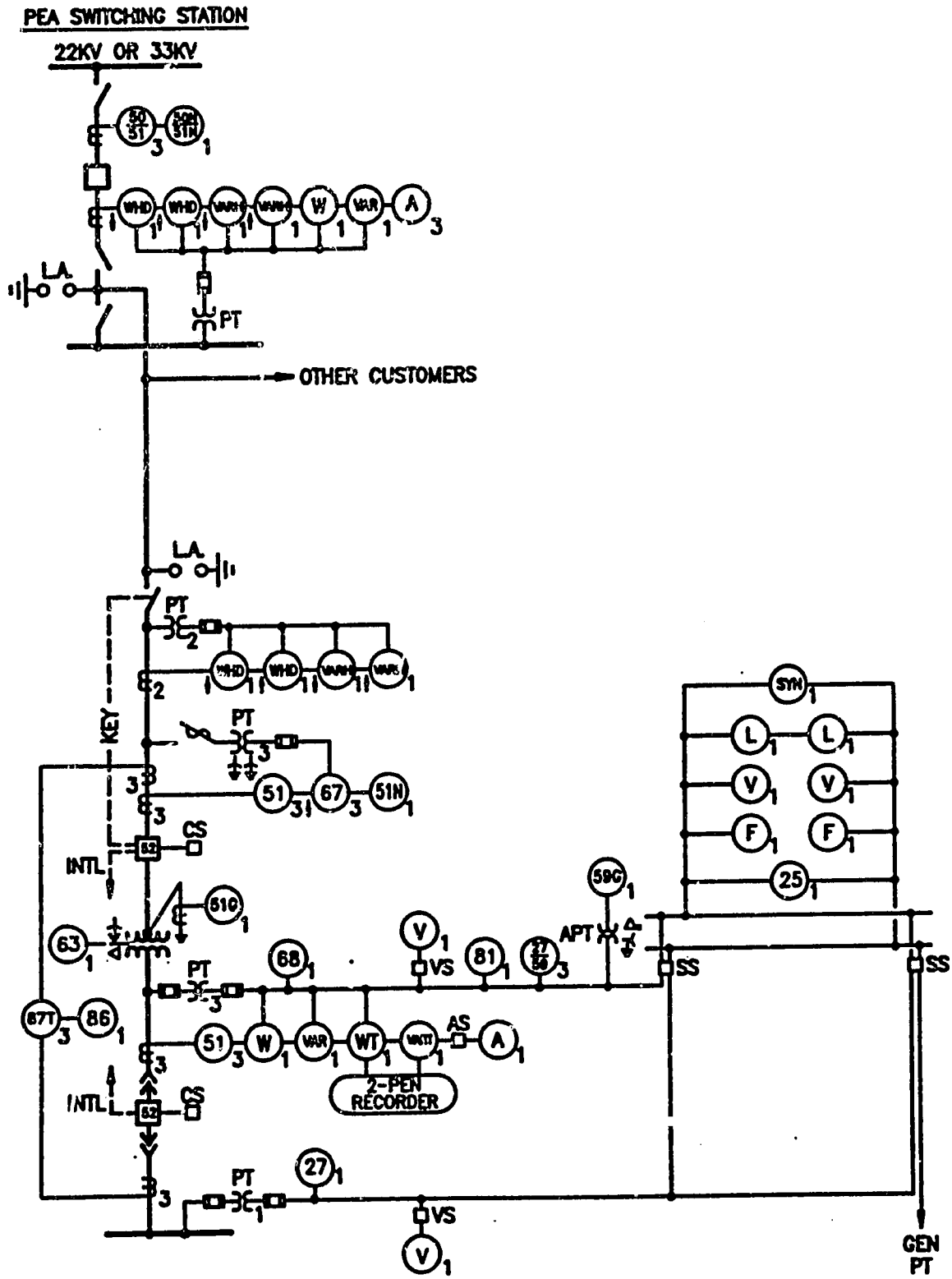

TYPICAL INTERCONNECTION FOR EXPORT FROM SUGAR FACTORIES
WITH WYE CONNECTED PRIMARY TIE TRANSFORMER

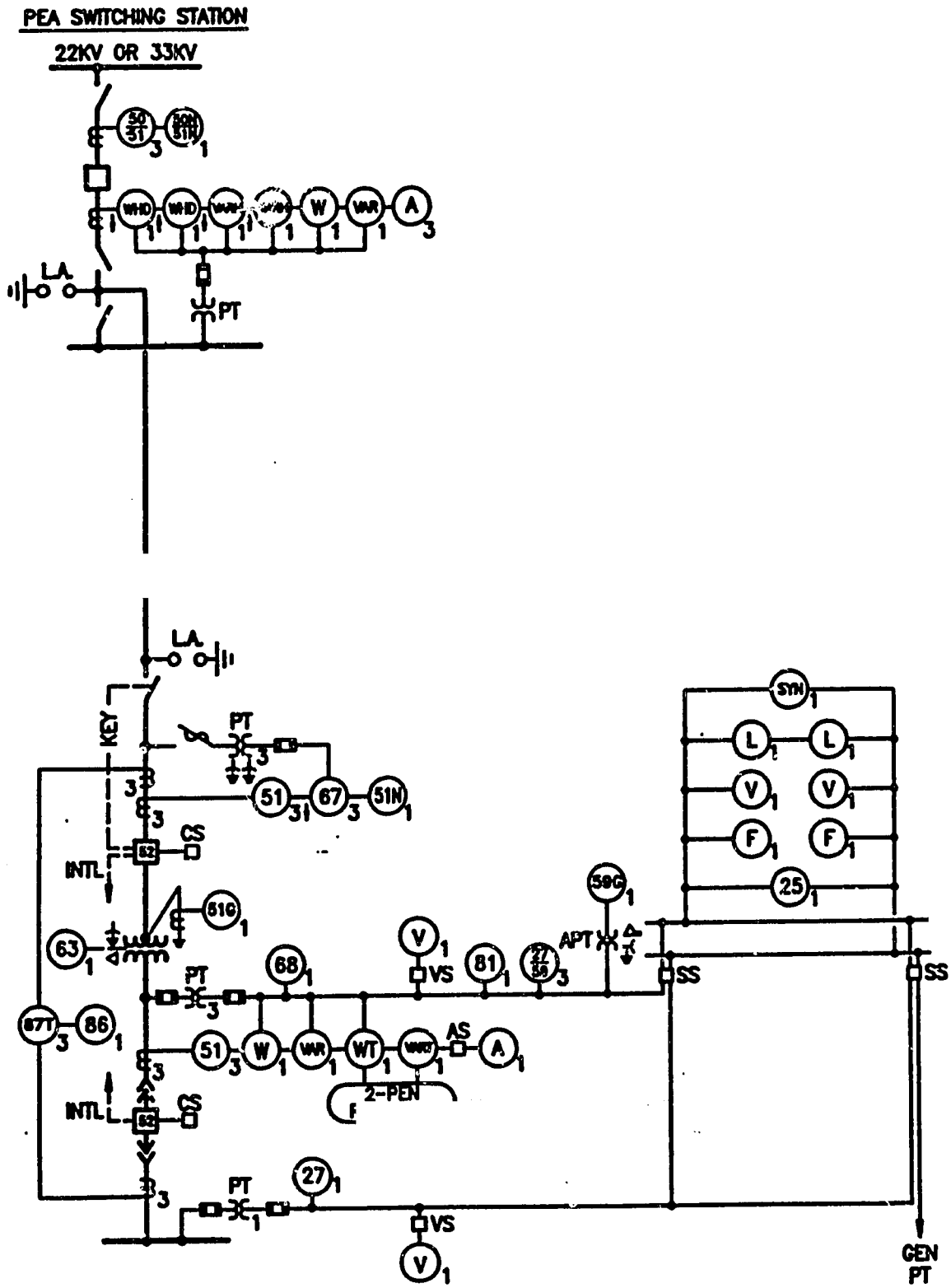

TYPICAL INTERCONNECTION FOR EXPORT FROM SUGAR FACTORIES
WITH DEDICATED 22KV OR 33KV LINE

UTILITY INTERCONNECT STUDY
THAILAND

EGAT SUBSTATION
69KV OR 115KV

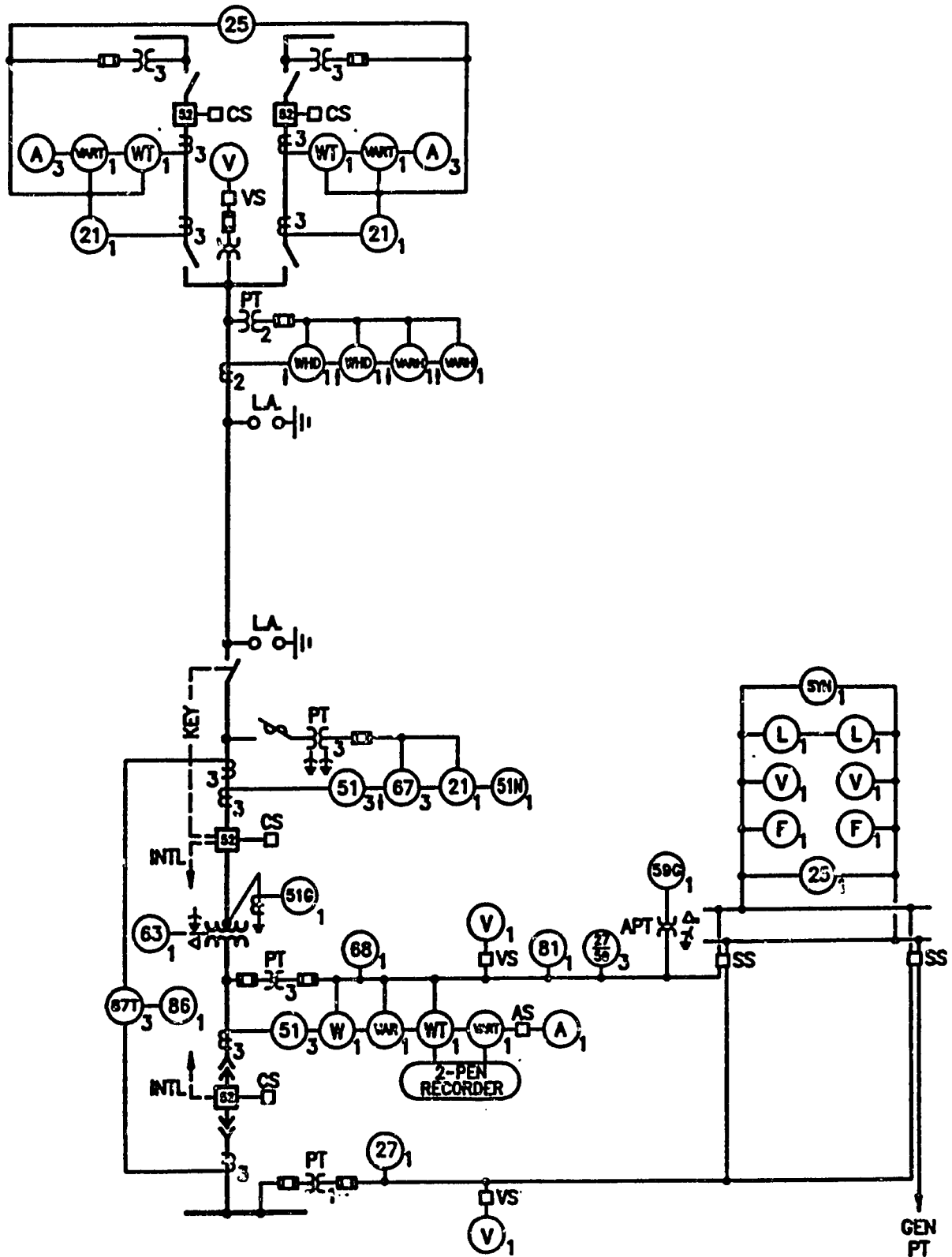

TYPICAL INTERCONNECTION FOR EXPORT FROM SUGAR FACTORIES
WITH DEDICATED 69KV OR 115KV LINE

Annex 4.2: Generator Protection and Grounding

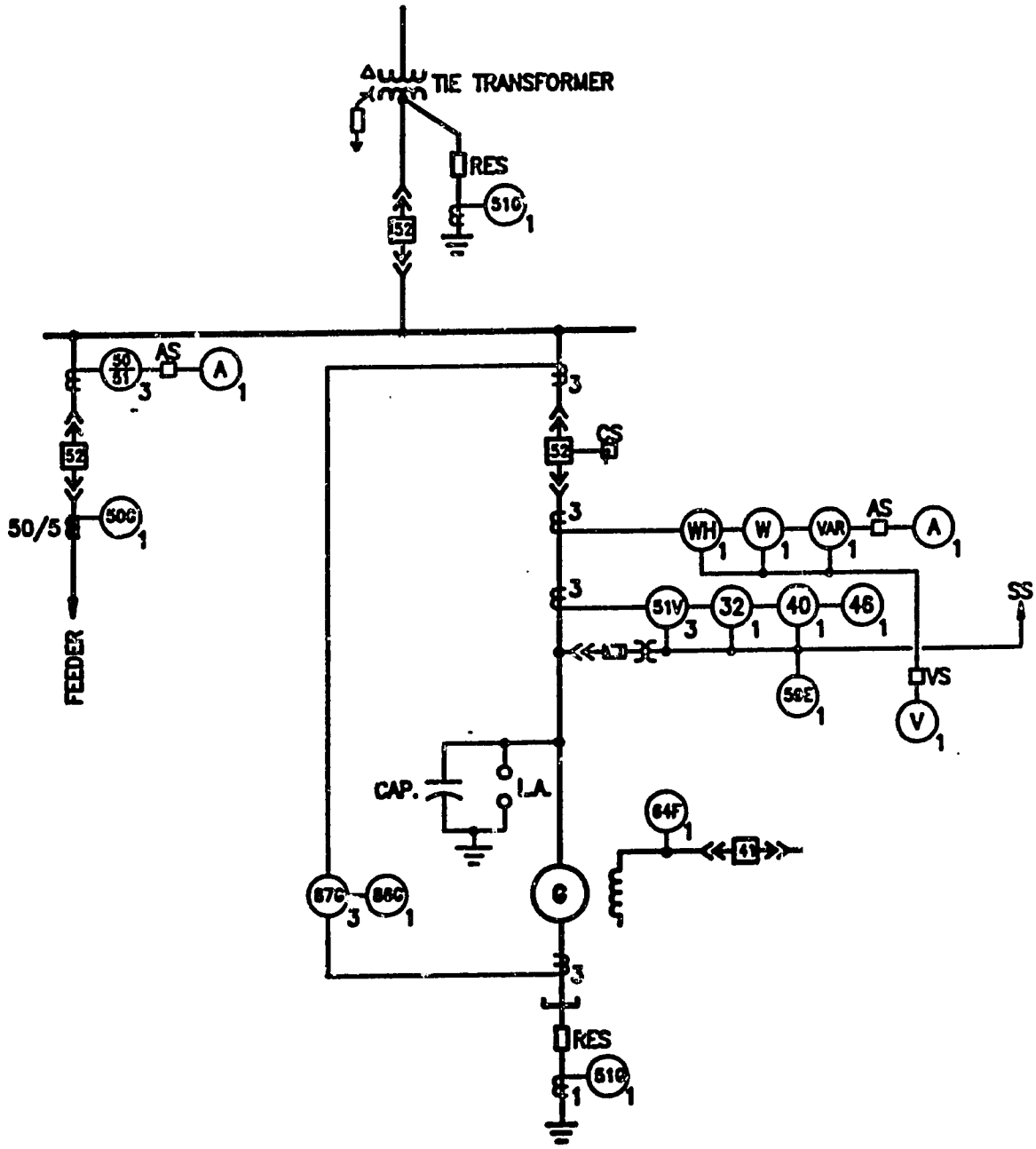

TYPICAL GENERATOR PROTECTION & GROUNDING WITH COORDINATED GROUND FAULT RELAYING WITH WYE CONNECTED SECONDARY TIE TRANSFORMER

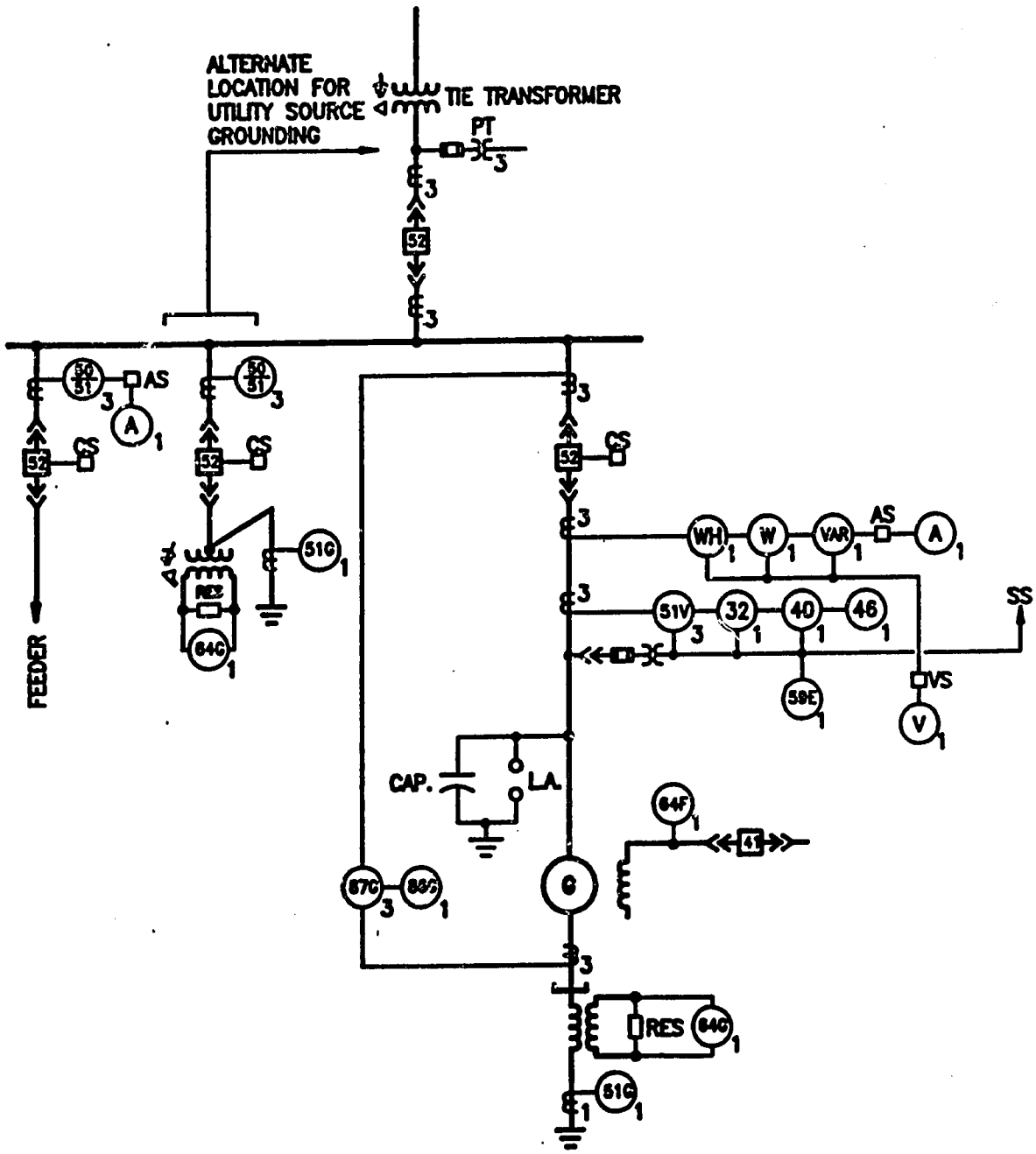

TYPICAL GENERATOR PROTECTION & GROUNDING WITH GROUND FAULT SENSING

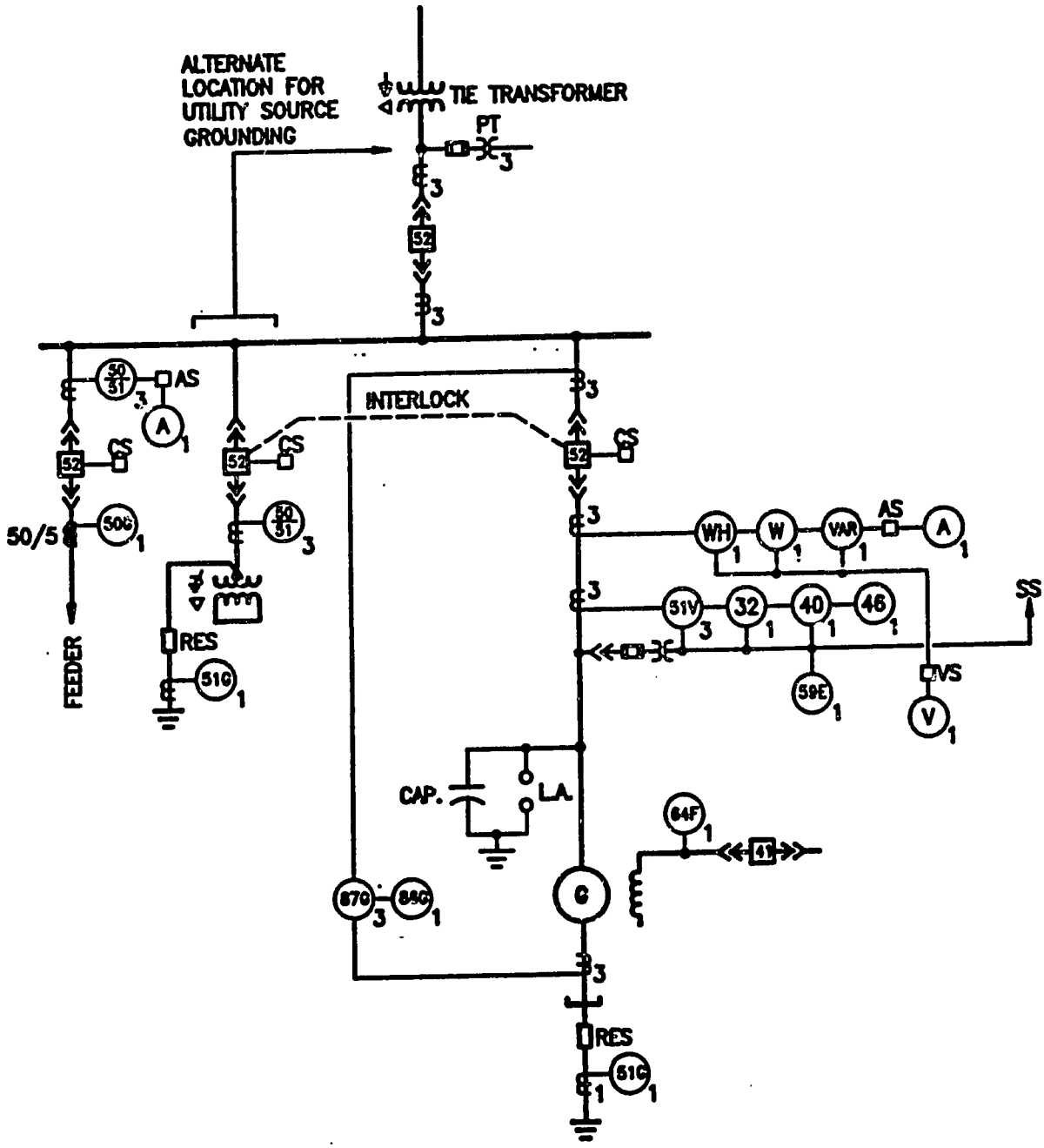

TYPICAL GENERATOR PROTECTION & GROUNDING WITH COORDINATED GROUND FAULT RELAYING

Annex 4.3: Sugar Factory Electrical Distribution System

UTILITY INTERCONNECT STUDY
THAILAND
October 24, 1989

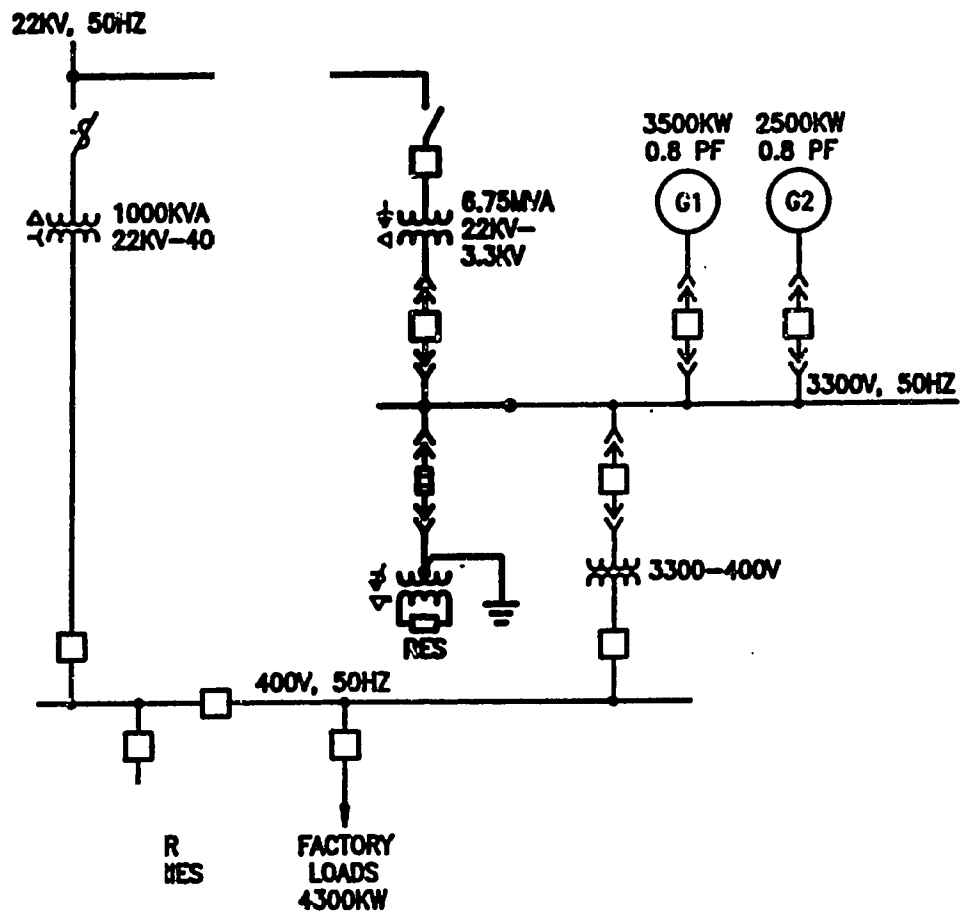

NOTE: HEAVY LINE INDICATES PROBABLE INTERCONNECTION TO EXPORT 5MW.

EXISTING SYSTEM ONE LINE DIAGRAM – KAM PANG PETCH

UTILITY INTERCONNECT STUDY
THAILAND
October 26, 1989

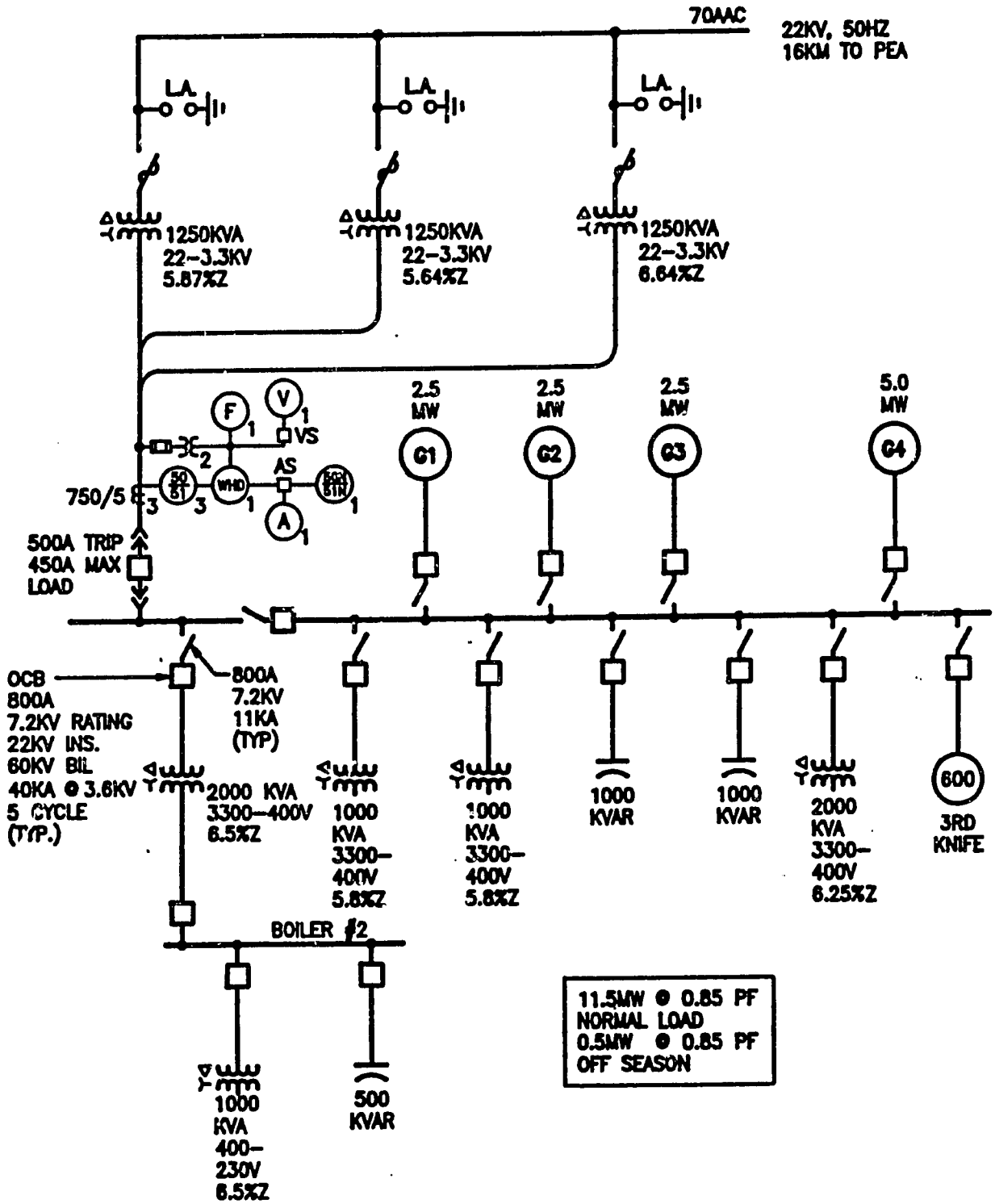

EXISTING SYSTEM ONE LINE DIAGRAM – THAI IDENTITY SUGAR FACTORY CO., LTD

UTILITY INTERCONNECT STUDY
THAILAND
October 27, 1989

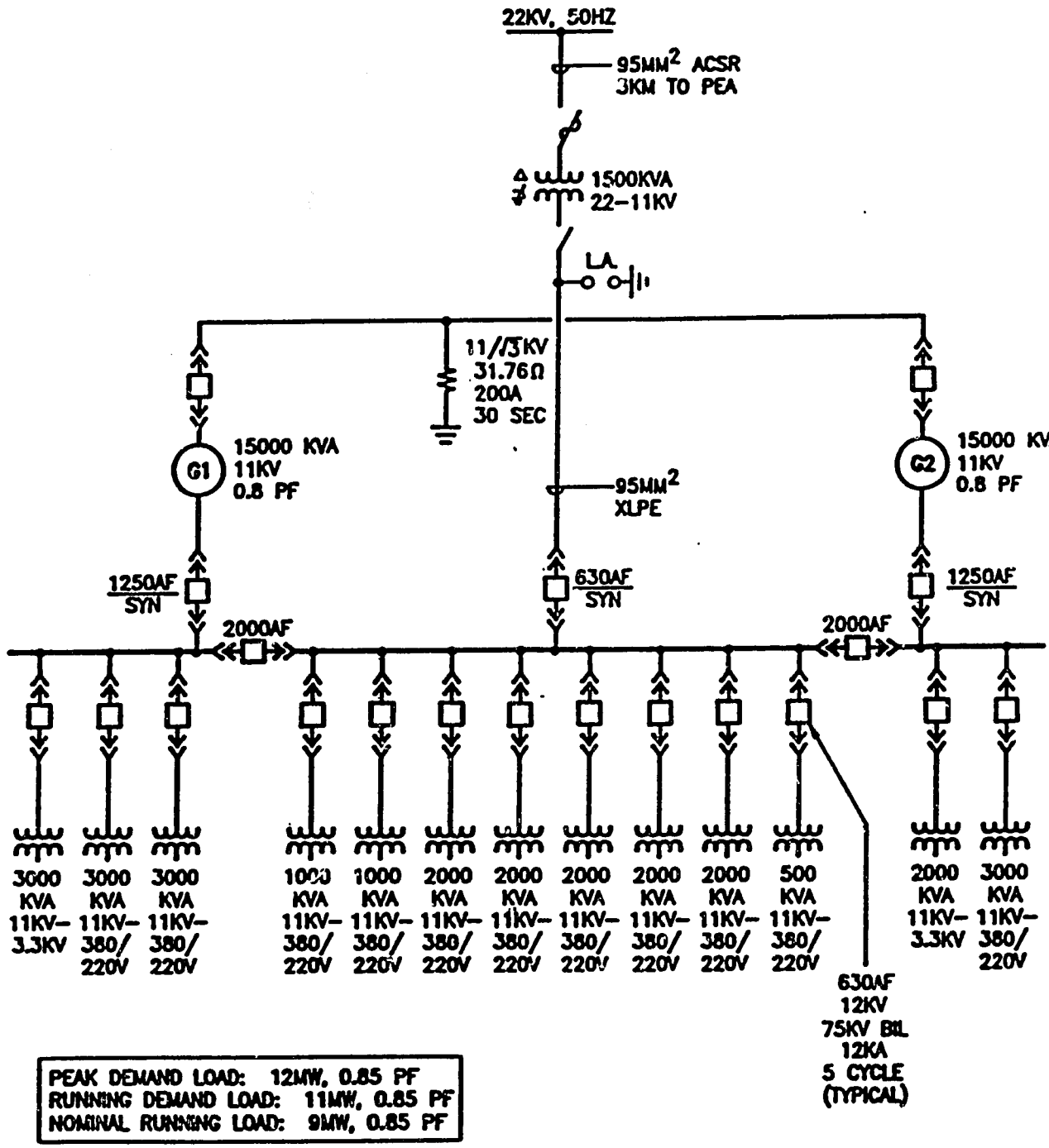

PEAK DEMAND LOAD: 12MW, 0.85 PF
RUNNING DEMAND LOAD: 11MW, 0.85 PF
NOMINAL RUNNING LOAD: 9MW, 0.85 PF

NOTE: GENERATORS SYNCHRONIZED ON LINE BEFORE MAIN BREAKER OPENED.

EXISTING SYSTEM ONE LINE DIAGRAM – UNITED FARMERS & INDUSTRY CO. LTD

Annex 4.4: EGAT & PEA Stations

UTILITY INTERCONNECT STUDY
THAILAND
October 26, 1989

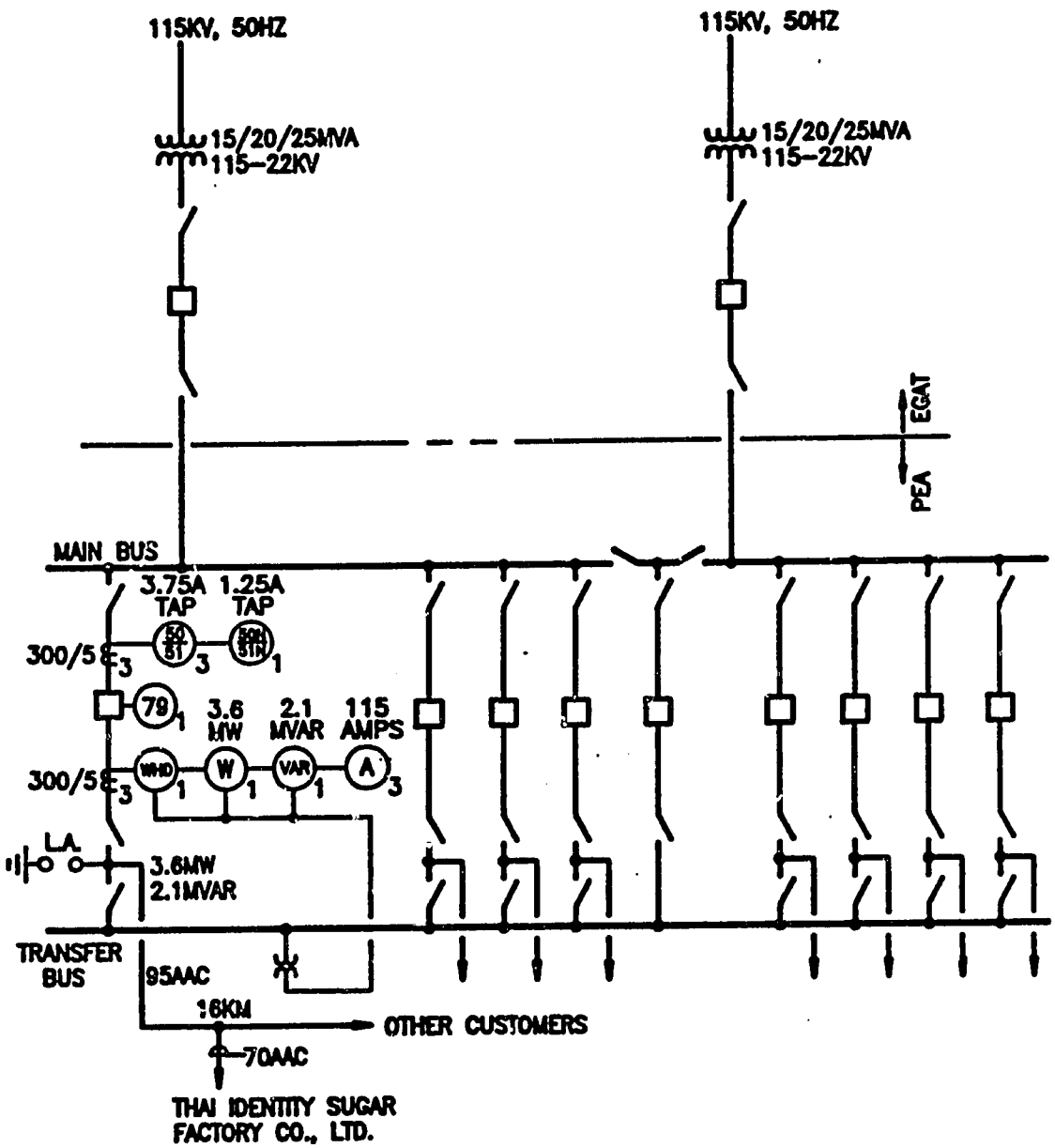

EXISTING SYSTEM ONE LINE DIAGRAM – UTTARADIT EGAT & PEA STATIONS

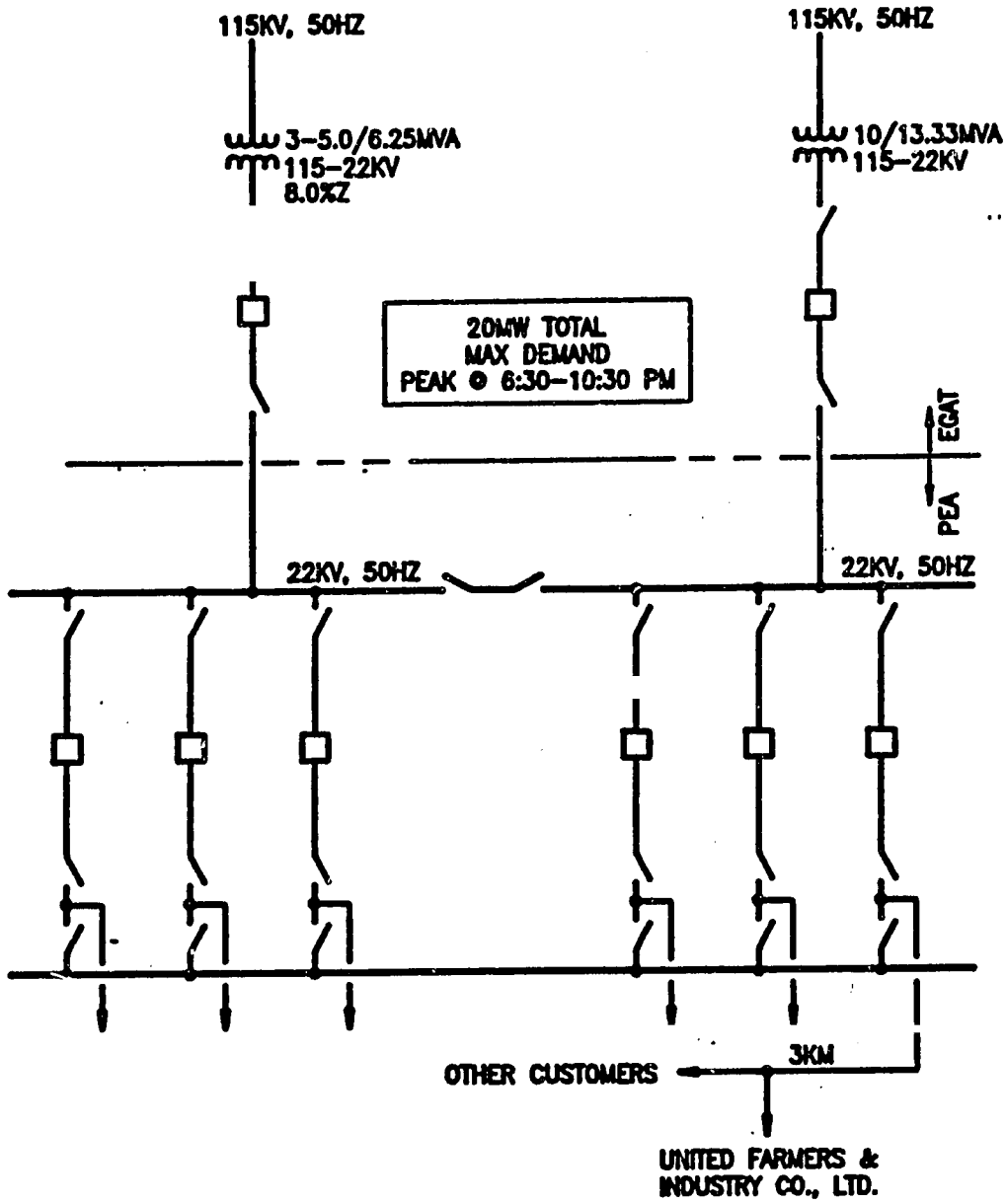

EXISTING SYSTEM ONE LINE DIAGRAM – CHUMPHAE EGAT & PEA STATIONS

UTILITY INTERCONNECT STUDY
THAILAND
October 29, 1989

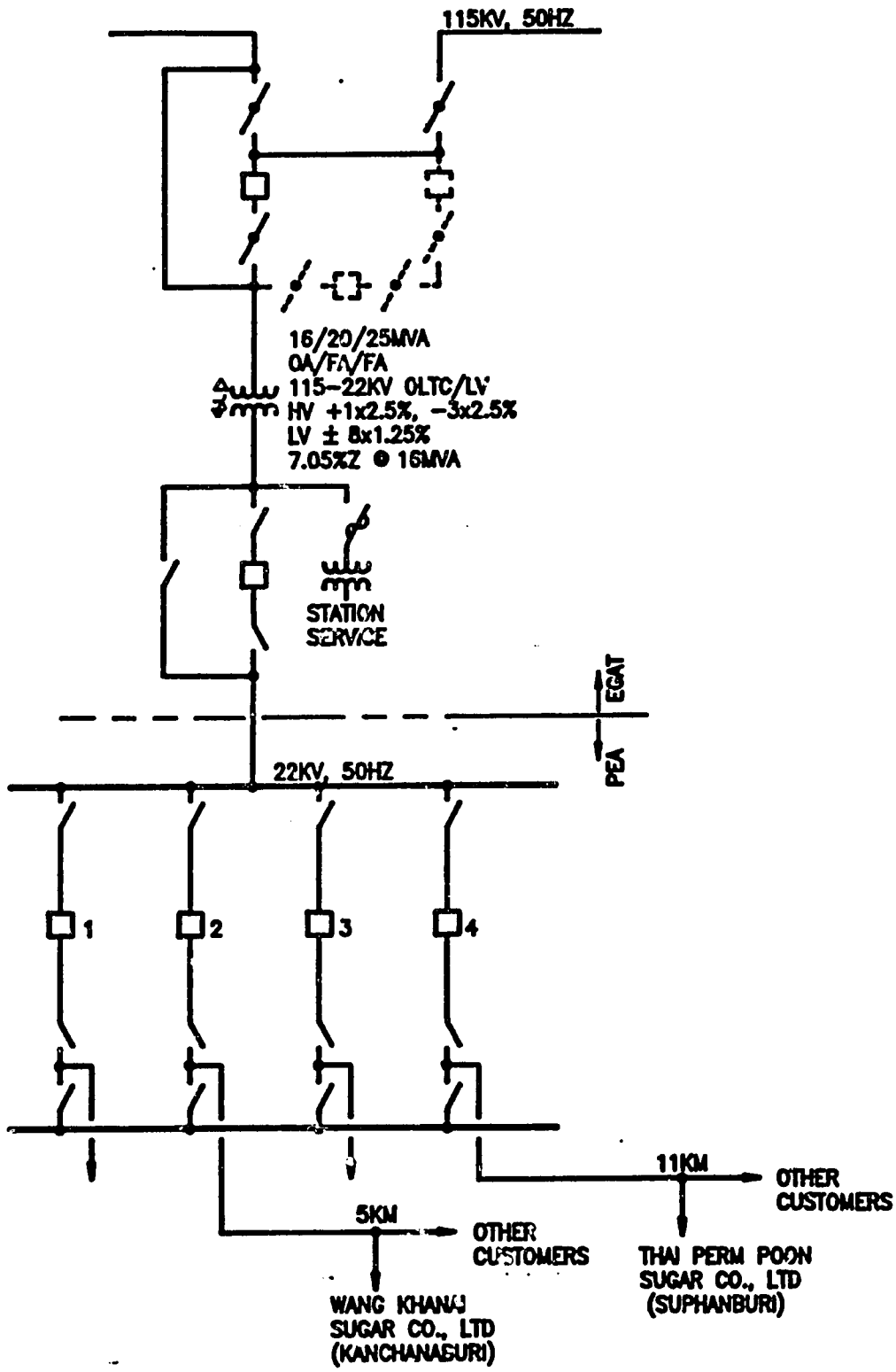

EXISTING SYSTEM ONE LINE DIAGRAM – THAMUANG EGAT & PEA STATIONS

UTILITY INTERCONNECT STUDY
THAILAND
October 29, 1989

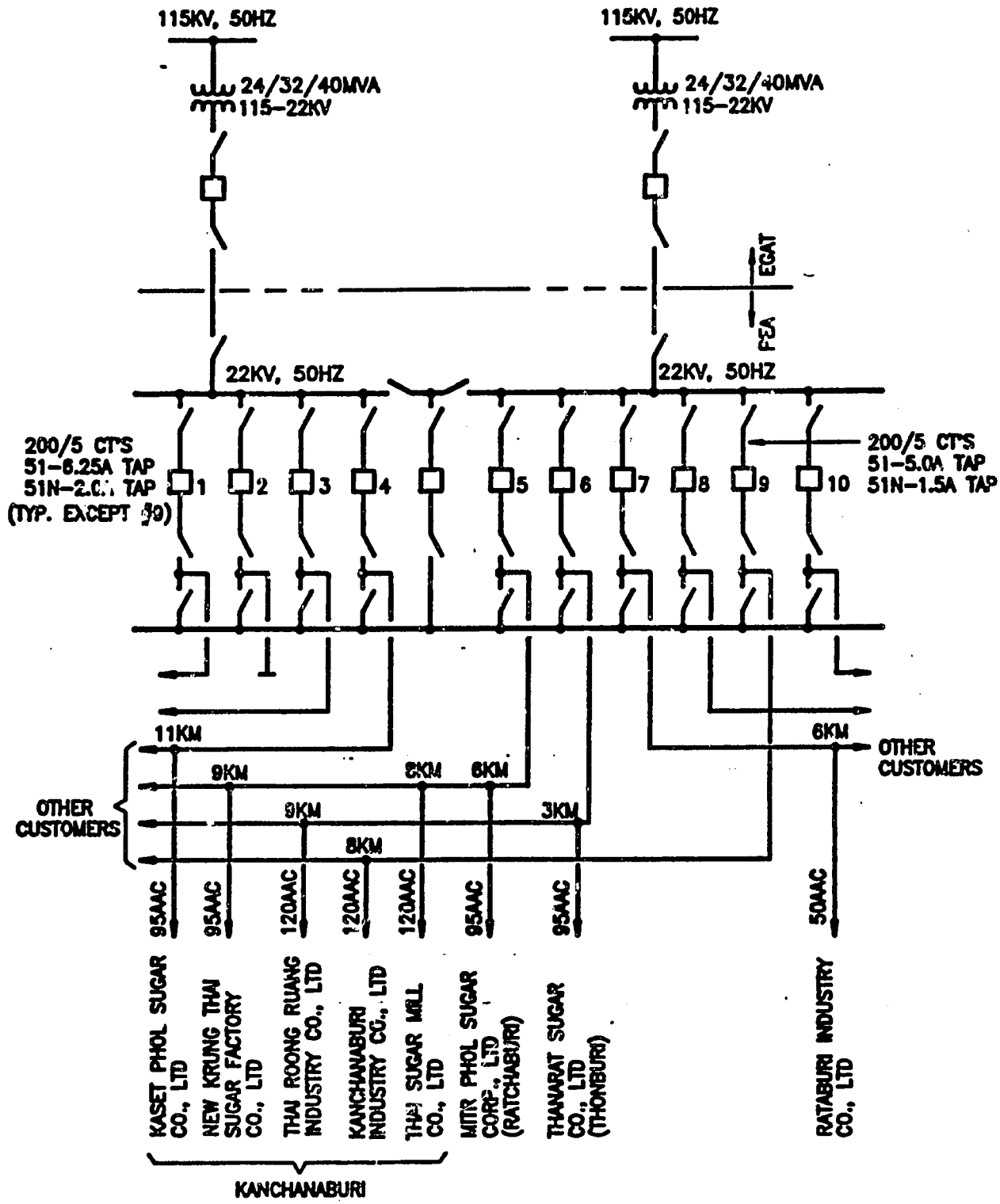

EXISTING SYSTEM ONE LINE DIAGRAM – BAN PONG-2 EGAT & PEA STATIONS

The Office Of Energy and Infrastructure

The Agency for International Development's Office of Energy and Infrastructure plays an increasingly important role in providing innovative approaches to solving the continuing energy crises in developing countries. Three problems drive the Office's assistance programs: high rates of energy and economic growth accompanied by a lack of energy, especially power in rural areas; severe financial problems, including a lack of investment capital, especially in the electricity sector; and growing energy-related environmental threats, including global climate change, acid rain, and urban air pollution.

To address these problems, the Office of Energy and Infrastructure leverages financial resources of multilateral development banks such as The World Bank and the InterAmerican Development Bank, the private sector, and bilateral donors to increase energy efficiency and expand energy supplies, enhance the role of private power, and implement novel approaches through research, adaptation, and innovation. These approaches include improving power sector investment planning ("lease-cost" planning) and encouraging the application of cleaner technologies that use both conventional fossil fuels and renewable energy sources. Promotion of greater private sector participation in the power sector and a wide-ranging training program also help to build the institutional infrastructure necessary to sustain cost-effective, reliable, and environmentally-sound energy systems integral to broad-based economic growth.

Much of the Office's strategic focus has anticipated and supports recently-enacted congressional legislation directing the Office and A.I.D. to undertake a "Global Warming Initiative" to mitigate the increasing contribution of key developing countries to greenhouse gas emissions. This strategy includes expanding least-cost planning activities to incorporate additional countries and environmental concerns, increasing support for feasibility studies in renewable and cleaner fossil energy technologies that focus on site-specific commercial applications, launching a multilateral global energy efficiency initiative, and improving the training of host country nationals and overseas A.I.D. staff in areas of energy that can help to reduce expected global warming and other environmental problems.

To pursue these activities, the Office of Energy and Infrastructure implements the following seven projects: (1) The Energy Policy Development and Conservation Project (EPDAC); (2) The Biomass Energy Systems and Technology Project (BEST); (3) The Renewable Energy Applications and Training Project (REAT); (4) The Private Sector Energy Development Project (PSED); (5) The Energy Training Project (ETP); and (6) The Energy Technology Innovation Project (ETIP).

The Office of Energy and Infrastructure helps set energy policy direction for the Agency, making its projects available to meet generic needs (such as training), and responding to short-term needs to A.I.D.'s field offices in assisted countries.

Further information regarding the Office of Energy and Infrastructure projects and activities is available in our Program Plan, which can be requested by contacting:

Office of Energy and Infrastructure
Bureau for Research and Development
U.S. Agency for International Development
Room 508, SA-18
Washington, D.C. 20523-1810
Tel: (703) 875-4052