PN-ABK 506

75703

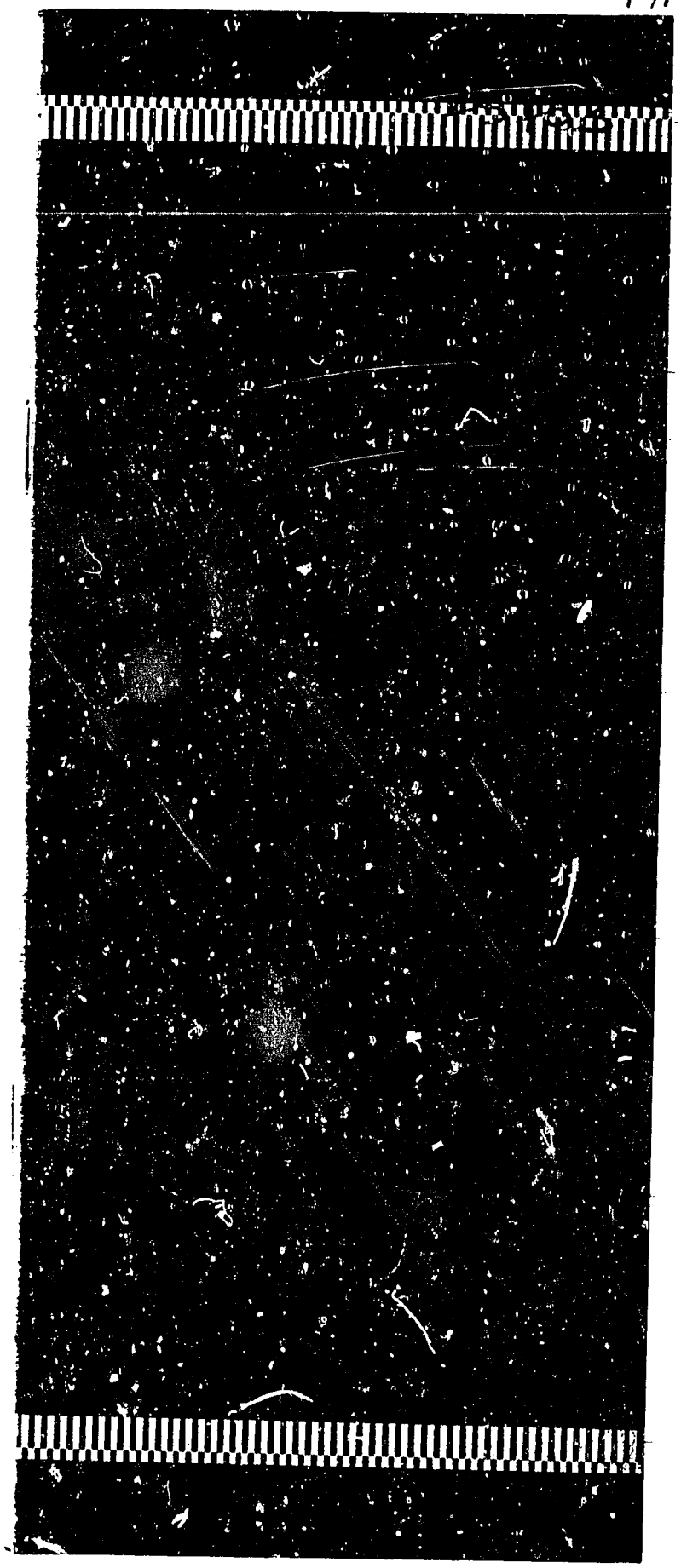

IITA: Recent Achievements and Future Outlook*

Lukas Brader

On many occasions IITA has presented its results to International Centers Week. For me this is the first opportunity, and I am pleased to do so because of the excellent work being undertaken by the institute and the tremendous challenges still ahead of us. Owing to budgetary limitations, IITA has not been able to implement its 1989-1993 plan as foreseen. It has, nevertheless, been able to carry out well balanced and productive activities in research and international cooperation over the last couple of years. The staff is fully committed to its tasks; together we had to face some local staff problems, which are now in the process of being overcome. I would like to express our gratitude to the various donors for their financial support. I am pleased to inform you that IITA was granted diplomatic privileges and immunities by the Federal Government of Nigeria in July this year.

Recent Findings and Developments

The various activities carried out by IITA fall under three major areas: research, international cooperation, and administration. Within research, we have the Crop Improvement Program working on cassava, yam, maize, cowpea, soybean, and plantain and banana; the Plant Health Program; and the Resource and Crop Management Program. I will present to you recent findings and developments in each of these crops and programs.

Cassava

In cassava, we have continued to develop genotypes targeted at the humid, sub-humid, semi-arid, and mid-altitude ecologies of Africa, which

* Text of presentation at International Centers Week, Washington, D.C., October 1991.

can produce higher yields of good quality under low input conditions. This is being addressed, firstly, through population improvement schemes based at specific sites in these ecologies. Secondly, germplasm adapted to specific ecologies in Latin America that are agroclimatic analogues of the major cassava ecologies in Africa has been introduced as botanic seeds and evaluated in corresponding ecologies in Nigeria, in collaboration with CIAT. Some of the seeds were obtained from crossing selected CIAT genotypes with IITA genotypes supplied to CIAT some years back. Progenies derived from such hybridization (IITA x CIAT genotypes) have proven very good in terms of reaction to African cassava mosaic virus and cassava bacterial blight, the two diseases that frustrated earlier attempts to establish and evaluate new germplasm from CIAT. Our major cassava breeding sites will soon include the new humid forest station at M'Balmayo, Cameroon, and, we hope, the Namulonge research station in Uganda.

Spontaneous polyploids selected from progenies of hybridization between cassava and its wild relatives are undergoing extensive evaluation in different agro-ecological zones in Nigeria. Early results are encouraging, with some triploids yielding more than twice the quantity of fresh roots produced by the best diploid cultivar. Over 200 triploids and tetraploids have been generated through open and controlled pollination. In addition to these polyploids of sexual origin, two spontaneous somatic tetraploids have been identified.

Spurred on by the successes of the early interspecific hybrids, we have extended our cross-combinations to include 12 wild *Manihot* species, with a view to introducing additional traits, such as pest resistance and certain root characteristics. Already progenies from crosses between cassava and *Manihot tristis* have been found very resistant to attack by the cassava green spider mite, currently one of the major biotic constraints and one for which genetic variability within cassava has been limited. Fortunately, this wild relative is one of the tuberizing

species, and it is quite close in morphology to cassava, so that exploiting this resistance in cassava improvement should not require extensive backcrossing for improvement of plant type.

It has been clearly demonstrated that traditional methods for processing cassava roots and leaves effectively reduce cyanide to negligible amounts in the various food forms. The pounding of leaves, grating of roots, and the softening that accompanies root fermentation in water were identified as the critical steps in the process of detoxification. The period of fermentation following grating of the roots has almost no influence on the level of residual cyanide, contrary to popular belief. In some African communities, cassava is consumed directly after boiling, giving the endogenous enzyme, linamarase, no chance to degrade the cyanogenic glucosides. We will, therefore, continue selecting for low content of these glucosides, but we also intend to include selection for increased activity of the endogenous degradative enzymes, so that there will be even more rapid breakdown of the glucosides during processing.

Yam

Yams constitute a major staple in the 'yam zone' of West Africa, stretching from Guinea to Cameroon, where they play a major role in the farming and food systems as well as in the traditional culture. The normally poor and irregular flowering of yams has restricted progress in conventional yam breeding. Nevertheless, two water yam (*Dioscorea alata*) hybrids produced at IITA have consistently yielded about 50% more than traditional cultivars in multilocational trials. We have also applied some techniques of molecular biology in our elucidation of the controversial taxonomic relationship between white yam (*D. rotundata*) and yellow yam (*D. cayenensis*). Analyses of desoxyribonucleic acid (DNA) from chloroplasts and ribosomes of several accessions of cultivated and wild yams suggest strongly that yellow yam originated from hybridization between white yam as female parent and a wild yam

species as male parent. *D. liebrechtsiana* and *D. abyssinica* were also deduced as putative parents of white yam.

Isozyme analysis is being used for the identification of genotypes, confirmation of hybrids, and investigation of phylogenetic relationships for cassava, yams, and their respective wild relatives. Analyses of DNA restriction fragment length polymorphisms (RFLP) will be intensified with the acquisition of cassava DNA libraries through our collaboration with laboratories at CIAT, Cornell University, and University of Washington. This will significantly improve the efficiency of our breeding, through better understanding of the genetic bases of desirable traits as well as the use of more efficient biochemical or molecular tags for the complex traits.

Maize

Maize provides a livelihood for millions of small farmers in Africa. It is popular because it gives a high return to manual labor inputs, is highly responsive when fertilizer is available, and is easy to market in view of high consumer demand. Our focus is on the small farmer in tropical Africa; such farmers need primarily to have stable, dependable yields, which means resistance to the many pests in the region. They don't have the money to apply agrochemical-based solutions to these problems, nor would this be environmentally wise. Breeding resistant varieties is both economically and ecologically the best solution.

Our major activity in maize now is to find resistance to the parasitic weed, striga. An interdisciplinary working group has been set up at IITA, and it addresses the problem over a wide front. Previous solutions to the striga problem in the USA and southern Africa were dependent on purchased chemical inputs. We are the only group in the world that has been able to develop genetic resistance to striga in maize. The resistant varieties allow fewer striga plants to come up, which in turn means they produce fewer seeds and the weed is gradually eliminated by biological, rather than chemical, means.

Downy mildew is the most serious fungal pathogen of maize in Asia, and it is rapidly spreading in Africa. We worked closely with the Nigerian national program to bring Asian genetic resistance into varieties adapted to Africa. Nigerian authorities are now using IITA's resistant variety DMR ESR to bring the downy mildew menace under control.

Maize streak virus is potentially the most devastating disease of maize in Africa. As is well known to you, our research over the past decade and more has ensured that all newly released varieties are highly resistant.

One of our most significant achievements was to introduce hybrid maize technology into West Africa. The hybrid varieties outyield open-pollinated ones by about 25 per cent on average. The Nigerian Government was so keenly interested in this project that it donated over half a million dollars to help us get started. Many doubted that the technology could work in a developing country. There are now four companies active in Nigeria, producing some 2,000 tonnes of seed annually, including hybrid seed, enough to plant 5 per cent of the country's maize area. The industry is just 5 years old and growing rapidly. We believe that a strong seed industry is essential for sustainable delivery of top quality improved seed to farmers.

Cowpea

Insect pests constitute the major constraint to cowpea production. Good sources of resistance to some insect pests of cowpea are available only in wild *Vigna* species, and we have identified several with a high level of resistance to some insects. Attempts to cross wild *Vigna* species with cowpeas by traditional breeding methods have proven difficult; consequently, the use of biotechnology is being pursued for this purpose.

As a prelude to the transfer of genes for insect resistance into cowpea, collaborative research institutions in Italy (University of Naples) and the USA (Purdue University) have conducted *Agrobacterium* and DNA particle gun transformation experiments. Transient expression of

marker genes has been achieved by both methods. Tests are under way to see whether the resistance factor is stably inherited.

Extensive collaboration work has also taken place to identify the genes coding for plant products that could increase insect resistance in cowpea. Some that show promise are various lectins, such as wheat germ agglutinin and tepary bean lectin; alpha-amylase inhibitor; and *Bacillus thuringiensis* protoxin. These will soon be tested in bioassays against major cowpea pests, now that transformation protocols are being refined.

Striga is an increasingly important constraint to cowpea production in Africa. Sources of resistance have been identified and the genetic inheritance has been studied. A vigorous breeding program to incorporate the resistance into cowpeas has produced numerous lines in advanced stages of testing.

Cowpea genotypes have been bred for the major cereal/cowpea production systems. While many genotypes behave differently when grown as an intercrop rather than as a sole crop, some are doing well in both. Most of these are able to produce a good harvest of grain as well as fodder. Selection of the best materials for growing as an intercrop with cereals is under way.

Soybean

There has been a rapid increase in soybean production in Nigeria, Zambia, and Zimbabwe over the past 3-5 years. This was largely because IITA had developed genetic material with good seed longevity, capable of nodulating without artificial inoculation. As production expands, there is a high probability of an increase in disease and pest problems. For example, red leaf blotch, a fungal disease of soybean, has recently become the major production constraint in Zambia and Zimbabwe. In Nigeria, another disease, frogeye leaf spot, has just recently become a serious problem. We have already developed a variety resistant to this disease. There are indications that high priority should be accorded to breeding soybeans for resistance to frogeye leaf spot

disease, as well as to research on cultural practices that prevent a high incidence and severity of the disease.

Plantain and Banana

Our plantain/banana breeding program was launched in 1987 in view of the acknowledgement by the CGIAR that plantains are a high-value basic staple food in the humid forest zones of the world, and in recognition of increasing pest pressure on the crop.

The black sigatoka disease is currently a major constraint to plantain/banana production worldwide, causing yield losses of 30 to 50 per cent. The primary objective of our work is to produce plantains that incorporate black sigatoka resistance, a technology that could be readily adopted by the African farmer.

Breeding plantain for durable host plant resistance to sigatoka advanced more rapidly than anticipated, and there were largely three components in this success. First, a high number of female fertile plantain clones were identified (currently 35 different cultivars, the highest number of seed producing types ever reported). Secondly, seed production rates in plantains at our Onne Station are higher than in any other breeding program (up to 200 seeds per plantain bunch after pollination with resistant wild bananas). These two points illustrate the comparative advantage of the IITA Onne Station in plantain breeding: the program is located in the secondary center of plantain diversity. Thirdly, tissue culture techniques are an integral part of the breeding program, and they quickly solve the problems of slow vegetative propagation, of quarantine in the international exchange of genetic resources, and of low seed germination rates (by applying embryo rescue).

Accomplishments of our genetic improvement activities include:

- the production of 250 hybrids of plantain and 4 hybrids of East African highland banana; among these, the selection of 20 black sigatoka resistant and high-yielding, tetraploid hybrids of plantain and

cooking banana, which are evaluated by multilocational testing in the humid forest ecoregion;

- the identification of 35 seed-producing plantain clones, showing high seed set; and
- the identification of over 30 sources of black sigatoka resistance in the natural germplasm of *Musa*.

In collaboration with INIBAP, IITA also participates in the International *Musa* Testing Program, in which hybrids from the FHIA (Fundacion Hondurena de Investigacion Agricola) breeding program are evaluated for black sigatoka resistance on a global scale.

The addition in 1991 of a plantain pathologist position addressed the need for more diagnostic analysis of patho-systems, to assess the appropriate strategies for disease control. Baseline data on host plant/pest interaction are required for the development of durable host plant resistance to sigatoka. This new activity focuses on sigatoka epidemiology, but it also assists the breeding component in resistance screening.

Biological Control

IITA has continued its work in biological control along the lines of past successes: solid research, in-depth training, and strong support to national program development.

IITA is now engaged on a course of reorganization of its overall plant health activities. A new Program is to combine the staff in the Biological Control Program (BCP) and relevant staff in the commodity improvement programs, to cover all aspects of plant health. We hope to achieve greater efficiency and conduct research that can better address environmental and sustainability issues. The new activities will benefit from the wide network of collaborators trained across Africa and from the strong system-based research of BCP.

Rationalizing pest management requires a profound understanding of the interactions between the plant and the physical environment, on the one hand, and its pests, their natural enemies, and the natural enemies of beneficial organisms, on the other, as well as the effect of climate and farmers' practices on these interactions. The system analysis approach via computer simulations represents a powerful, and often the only viable, tool to analyze such complex relationships. Ecosystems analysis at BCP started with an intensive study of a cassava system, in collaboration with the University of California, Berkeley, and the Swiss Federal Institute of Technology in Zürich. Similar activities are now in an advanced stage for the maize and cowpea systems. It is planned to link these models, to arrive at an integral understanding of African farming systems.

After 7 years of focused efforts to introduce biological control of the cassava green mite (CGM), a major breakthrough has been achieved by the establishment of predacious mites from Brazil, released in Kenya and in Benin. These establishments, which are already keeping the CGM population under control, are now monitored in great detail and new releases are being made with national programs in different ecological zones. The release activities are complemented by biological, behavioral, and ecological studies, both in the laboratory and in the field. This project is carried out in close collaboration with EMBRAPA (the Brazilian national research organization) and CIAT.

Research into sustainable control practices against the cowpea pest complex has progressed to the level of an operational plant simulation model. Egg parasitoids of the bean flower thrips have been discovered for the first time, but parasitism rates are low. Ecological studies indicate that the thrips, one of the major constraints in cowpea production, is possibly an exotic species to Africa, introduced first into East Africa from South East Asia. This fact makes classical biological control a likely option.

The larger grain borer (LGB), a major threat to stored maize, is an exotic species introduced from Mexico or Central America to East and West Africa some 10 years ago. It can make

maize unfit for human consumption within 2 to 3 months of storage. Ecological research is under way in Mexico and Honduras on the LGB as a basis for a biological and integrated control program, to be carried out in collaboration with CIMMYT and the Escuela de Agricultura Panamericana (EAP). Research activities on the stem borers have been extended to East and Southern Africa, in response to national program requests for assistance.

Biological control of the mango mealybug is progressing in a satisfactory manner. Releases of natural enemies from Côte d'Ivoire to Zaire have been effective in controlling the mealybug with a few exceptions, for which a new parasitoid, *Anagyrus mangicola*, has been introduced from India. Test releases are to begin in 1991.

A collaborative project on the development of microbial control for locusts and grasshoppers has been started in 1990. To date, encouraging results have been achieved, in both lab and field tests, using fungal spores formulated and applied with technologies developed by the project. New, effective fungi, bacteria, and other pathogens are being sought. Several fungi have already been discovered and are tested for pathogenicity. Simple techniques for both the multiplication and the application of the pathogen are being developed for use by the national programs. Studies on the biology and ecology of grasshoppers and their natural enemies are under way.

A project designed to provide basic ecological, biological, and socioeconomic data on the major production constraints in highland bananas has been started in Uganda, to eventually cover the East Africa region. The objectives of the diagnostic surveys are to establish the noxiousness of the different pests and diseases and eventually design a biological or integrated control project.

Resource and Crop Management

The appropriate management of fragile tropical soils and the development of sustainable production systems has been a major focus of our work since the establishment of the institute in 1967. The tropical African farmer tackles the problems of infertile soils and vagaries of pests by practicing shifting cultivation. Mixtures of crops are always planted to fully exploit the growing season and to reduce the possibilities of failure. These practices provide the farmer with low but stable crop yields. However, this traditional system can no longer sustain such yields under growing population pressure. Moreover, it accounts for about 70 per cent of the current deforestation in Africa.

The challenge, therefore, is to develop systems that enable farmers to produce enough agricultural produce for a rapidly growing population while conserving the natural resource base. This should be done with a full understanding of the farming environment, its physical and socioeconomic dimensions, and of the production systems for different crops. At IITA, we tackle this through research on resource and crop management.

From studies on alternatives to the slash-and-burn system, we have concluded that the essential principle for preventing soil degradation is to maintain a cover of organic matter on the topsoil. It is also necessary to adopt mixed cropping of shallow and deep-rooting species for efficient use of soil nutrients, and to use fertilizers judiciously in order to prevent nutrient imbalances. In addition, weeds should be controlled and crop varieties resistant to the most common pests and diseases should be used.

Such results have been obtained from a series of mostly long-term experiments, with various crop rotations and cropping systems. A wide range of soil functions and characteristics is studied, in particular physical and chemical properties and their evolution under different cropping conditions. We are applying these principles and the results obtained to the development of prototype systems, which are sustainable and more productive than slash-and-burn systems.

For this a systems approach is used. Figure 1 is a conceptual model of resource control in a cropping system. It is basically a biological process model, it focuses on the processes of production. Within the biological system, flows of matter (or energy) are shown as solid lines, while the broken lines show the flow of information.

Such a complex model is not useful as a predictive or management tool, but it is useful for research planning or helping in the development of concepts such as sustainability.

Sustainability is a complex concept, incorporating issues of:

- ecology (resource availability and environmental conservation)
- economics (productivity, viability)
- equity (cultural acceptability, human welfare)

All these aspects are often incorporated into definitions of sustainable agriculture, such as the one provided by TAC (1988). The research scientist, however, requires a practical yardstick for assessing sustainability. We must have some means both of assessing the relative sustainability of different agricultural systems, and of evaluating the factors that determine sustainability. We have, therefore, devoted some time over the last few years to constructing operational measures of sustainability.

In one approach, biological, physical, and economic measures are merged into a single economic index, that of Total Factor Productivity (TFP). TFP is defined as 'the total value of all output produced by the system during one cycle divided by the total value of all inputs used by the system during the same cycle'. The costed productivity factors, the natural resources such as soil nutrients, are aggregated to give the TFP index. If TFP shows a constant or upward trend over a period of time, then the system is sustainable, (for example, system 1 shown in Figure 2).

The biological scientist is concerned primarily with the ecological sustainability of the

system. Can resources be renewed from year to year such that production can be maintained? We have initiated a study to develop models to assess this, whereby we consider that *a cropping system is not sustainable unless the annual output shows a non-declining trend and is resistant, in terms of yield stability, to normal fluctuations of stress and disturbance.*

The purpose of such a simplifying approach is that it provides a basic foundation on which other, more complex, aspects can be built. For instance, the proposition that in managing key natural resources, sustainability is dependent on conservation of the resource base such that it, too, shows a non-declining and stable trend from crop cycle to crop cycle, means that for sustainability, essential resources must be renewable from crop cycle to crop cycle.

In 1990 IITA began cooperative working arrangements in agroclimatological modeling with national and international institutes for the development of a geographic information system. Software for data analysis and quality control was developed, which enabled IITA to share the data with other international centers and national programs. IITA's agroclimatologist, in addition, developed a resource information system (RIS), which can generate maps showing specified environmental and socioeconomic conditions.

Soil erosion studies continued in Nigeria (on non-acidic soil types) and Cameroon (on acidic soils) under tillage, no tillage, and bare fallows, with support from the German aid agency, GTZ. Generally, soil loss has been much greater from the acidic than from the non-acidic soils, under all treatments. Acidic soils are more easily eroded and are lower in nutrients than non-acidic soils. Acidic soils are typical of the humid forest, while the soils of the forest-savanna transition and savanna zones are non-acidic.

Changes in the main constituents and physical properties of soil were investigated in Nigeria, as they occurred following land clearing, cropping, and fallowing. The causes of these changes will also shape new soil and vegetation management practices that will improve soil fertility.

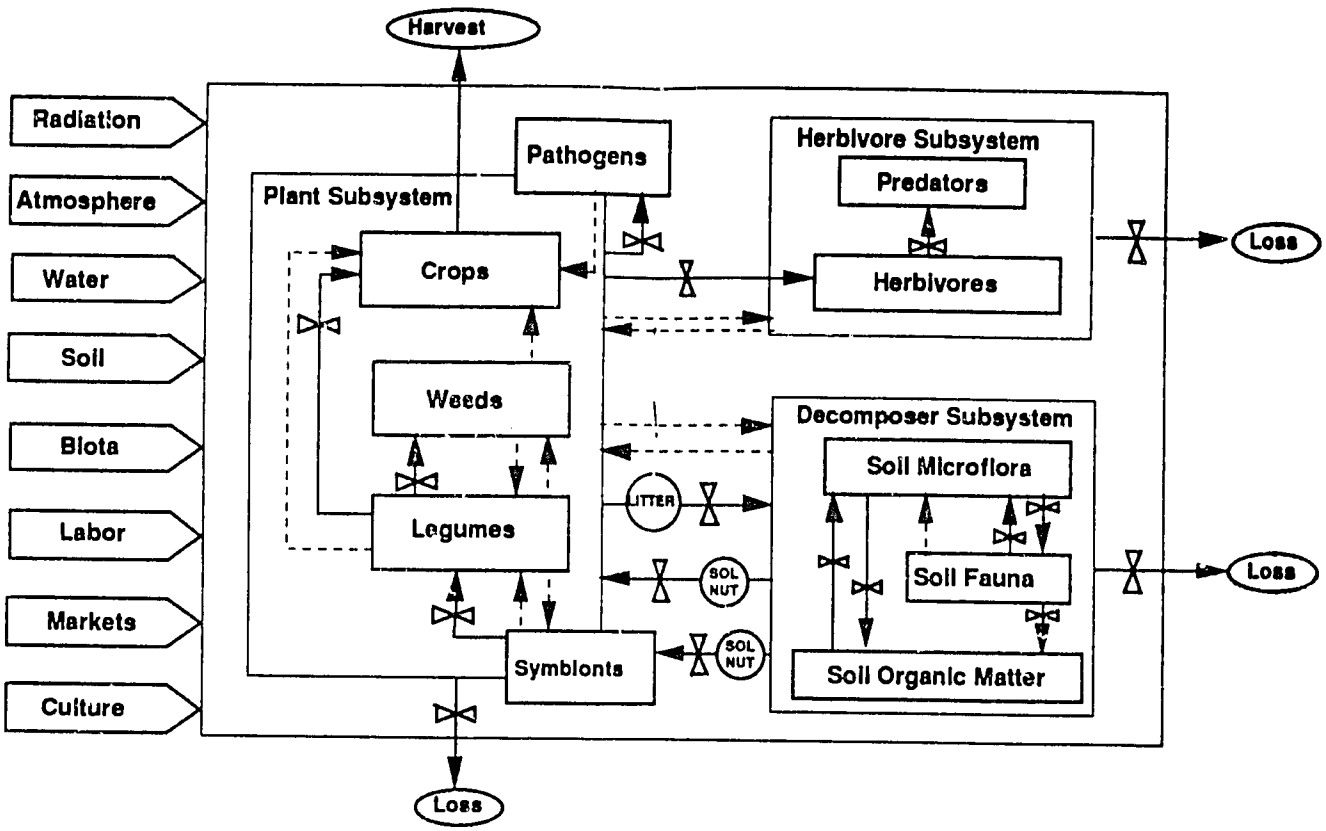

Figure 1. Conceptual model of a cropping system

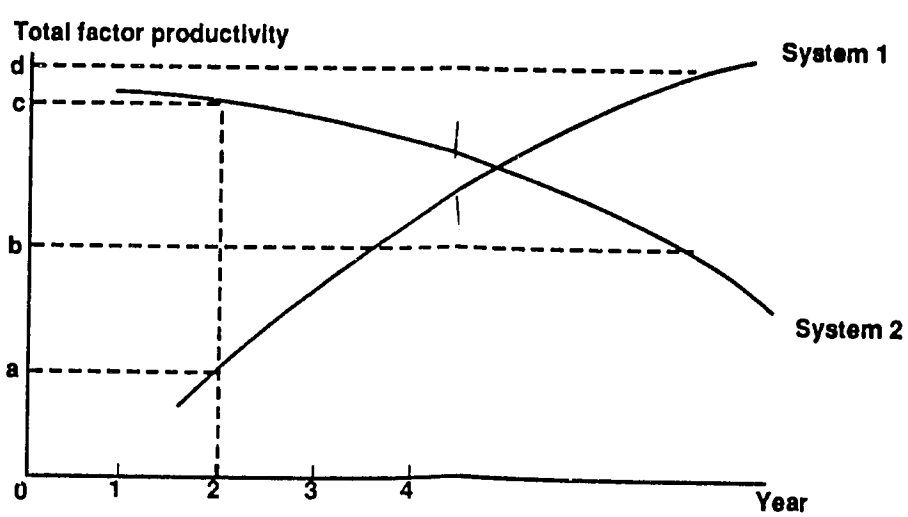

Figure 2. Total factor productivity changes for two hypothetical agricultural systems over time

Alley cropping or farming is an agroforestry system, which sustains soil fertility while reducing the need for fallow periods. Currently, long-term trials are investigating what tree species are best for particular conditions or locations (such as acidic or non-acidic soils, or in combination with various food crops or cover crops), what management practices are most efficient for different objectives, and how alley farming affects soil fertility and crop productivity. In trials over a 9-year period, maize crops grown in alleys of hedgerow species, without fertilizer, yielded as much as maize receiving 45 kg N each year outside the alley cropping system.

Research has identified both the timing and frequency of weeding that minimizes weed-related yield losses in all arable crops within IITA's mandate area in West Africa. Farmers do not always grow their crop mixtures at densities that will enable the crops to compete effectively with weeds after the initial weeding is done. Even when they weed their crops, the weeding is not a timely operation. As a result of these shortcomings in farmer practices, weed management research at IITA has recently focused on the use of cover crops to smother weeds. "Egusi" melon (*Cucumeropsis mannii* Naud.) has been successfully used to control weeds, reduce weeding frequency, and reduce soil erosion. This non-leguminous cover crop produces seeds that are highly valued for food, and it is compatible with most crop mixtures.

Other weed control practices, such as planting of a fast growing cover crop or hedgerow trees, as in alley farming, offer a more efficient solution in the long run. Cover crops can serve as a live mulch: a protective layer of vegetation which controls weeds, reduces evaporation, prevents erosion, lowers daytime soil temperatures, and — especially if it is leguminous — can enrich the soil with nitrogen and organic matter.

IITA resource economists in 1990 evaluated the relative economic benefits from soil erosion control, in southwestern Nigeria, using three systems: alley cropping with leucaena (in 2-meter and 4-meter widths between hedgerows), no tillage, and bush fallow (with 3-year and 9-year fallows). The study gauged the theoretical "profitability" of these alternatives, using a capital budgeting approach, with a 10 per cent interest charge, and taking into account the long-run and short-run impacts of soil erosion on agricultural productivity. Two prospective scenarios were assessed. Where population density is low and access to forest lands is "costless", the 9-year bush fallow system is most profitable, followed by 4-meter-wide alleys, no tillage, 2-meter-wide alleys, and the 3-year fallows. Where land values are rising and fallows become an economic "luxury" because of lost production opportunities, the 4-meter alley cropping system is most profitable, followed by no-till, 2-meter-wide alleys, and finally the 9-year and 3-year bush fallow systems.

Some interesting results have already emerged from the Collaborative Study of Cassava in Africa (COSCA), financed by the Rockefeller Foundation and implemented from 1988 onward. The study aims to collect authoritative information on cassava production systems, processing methods, marketing prospects, and consumption patterns, because such information is considered essential in decisions related to the improvement of cassava production, including the relevance of research on cassava by national and international agricultural research centers.

The data collected so far show that there is much stronger involvement of women in agricultural activities in East Africa than in West Africa. Most of Africa's cassava is consumed in processed forms, and products consumed are numerous. In heavily populated areas, more intensive crop management practices are applied than in areas with more limited population pressure. A clear need emerges to produce cassava varieties with different lengths of growing cycle; under heavier population pressure, farmers harvest cassava earlier.

COSCA is being conducted in three phases. The number of African countries participating grew from 6 in Phase I to 14 in Phase III. The

results just presented are from Phase I; Phase II surveys have been completed, data analysis has just begun; Phase III will commence in 1992. Each phase has complementary objectives.

We are convinced that the full analysis of the COSCA surveys, when completed, supported by necessary follow-up studies, will provide a unique data base that will prove invaluable for a large variety of planning activities. Efforts are under way to integrate this information with other data on farming systems and major crops of the region.

Technology Transfer and Impact

Technology transfer and strengthening of national agricultural research systems (NARS) is a closely interwoven activity. IITA has a long history of working with the NARS of the region, in a long chain of collaboration to produce improved agricultural technology for Africa. We have a long and productive record of training activities, which has addressed the need of over 6,800 persons, mostly from Africa. In recent years, we have shifted group training activities to the NARS, while at headquarters specialist training is being emphasized.

IITA is acutely aware that the technology it generates is of little value in the absence of effective mechanisms to share it with national programs in the area of its mandate. Among those which have proved productive over the past years, I will cite the resident scientist teams, and the research networks.

Resident Scientist Teams

The National Cereals Research and Extension (NCRE) Project, which is a cooperative agricultural research effort between the Government of Cameroon through its Institut de la Recherche Agronomique (IRA) and USAID, is a good example of the strengthening of a national system research capacity by posting of a resident team of scientists in key disciplines which the national system is lacking. It has not only helped Cameroon to benefit from its own research but

also to become a producer of technologies which can benefit other neighboring African countries. IITA fielded up to 19 scientists at a time during the first two project phases (1981-1990).

Parallel with the research agenda was a program to transmit research results to extension agencies for onward transmission to farmers, and to communicate farmers' problems to researchers as feedback to enhance the usefulness of future work. Over the years, various beneficial results have been achieved, including the release of new sorghum, rice, and maize varieties and the training of 20 Cameroonians at the M.Sc. or Ph.D level.

Research Networks

IITA considers collaborative research networks as a valuable tool in the development and validation of technologies, particularly because of the small size of many national systems. IITA has acted as a catalyst to help establish some networks by identifying sources of funding and providing technical support.

The maize and cowpea research networks under the Semi-Arid Food Grain Research and Development Project (SAFGRAD) with USAID funding are two such networks dealing with IITA mandate crops, in the management of which we have been associated since 1987. The networks have promoted interest in maize and cowpea research and the linkages developed within and among NARS scientists have greatly increased the morale of individual scientists. The enhanced interaction coupled with the training activities organized by the networks and the technical backstopping by IITA scientists and other resource persons have increased the efficiency and effectiveness of research within individual national programs through sharper focus on major constraints and better utilization of resources.

The collaborative research activities initiated and coordinated by the networks have resulted in the development of new technologies which are subsequently exchanged within the networks: for example more than 20 varieties of

10

maize and 15 varieties of cowpea have either been released or are at the pre-extension stage. Of particular significance are the early and extra-early maize varieties promoted by the network: they escape drought and help to break the hunger period as they mature before the grain or root crops in any given year.

The Alley Farming Network for Tropical Africa (AFNETA), supported by IITA, ILCA, and ICRAF, was established in 1989 to promote and coordinate alley farming research and development within the NARS of the region. This is done through promotion of information exchange, training, and collaborative research on alley farming and other related agroforestry systems, among NARS and with the IARCs. The network is an excellent example of effective cooperation between NARS and CGIAR institutions.

In its three years of operation, the network has trained about 200 scientists and technicians through its trainer-training and regional and in-country training activities. Collaborative research projects have also been developed and initiated with 30 NARS institutions in 20 countries of sub-Saharan Africa. These research activities stress interdisciplinarity and team work, farmer participation, and gender considerations in the development of sustainable cropping systems based on alley farming principles.

Prospects for the adoption of alley farming by smallholder farmers is a major issue under investigation. The program will move increasingly into on-farm, adaptive, and developmental research, which would require the full collaboration of development/extension agencies, including NGOs and farmers. The strong interest expressed in the network by participating NARS institutions in various countries is a clear indication that the alley farming concept can form the basis of the gradual introduction of more sustainable production practices.

Other Visible Impact

In yet other examples of the adoption of new technologies by farmers and the beneficial effects of our work on agricultural productivity in sub-Saharan Africa, high-yielding, pest-resistant cassava clones/populations have been consistently supplied to the national root crop programs in Africa. Cultivars originating from our germplasm and released by these programs are now being grown by millions of farmers in Cameroon, Gabon, Liberia, Ghana, Nigeria, Rwanda, Sierra Leone, Tanzania, and Zaire.

According to the FAO, cassava production in Nigeria has doubled over the last 5 years and the country became the largest producer of cassava in the world in 1989 and 1990, surpassing Brazil and Thailand,. This, and the increases also reported for other African countries, can be credited to the spread of higher yielding, disease resistant clones and the effective biological control of the cassava mealybug. In addition, the application of rapid multiplication techniques developed by our scientists has considerably reduced the long-standing constraint of low multiplication rates, while our tissue culture and virus indexing technologies have overcome the difficulties of transfer of vegetatively propagated material.

Processing technology can determine how much cassava farmers will benefit from their labor. Well-designed equipment in a well-organized system can significantly improve farm families' income from their cassava harvest, even double it, as we have recently confirmed.

In Africa, cassava is processed largely by women, so research gains in processing hold a special significance for the well-being of rural women and their families. We have analyzed existing cassava processing systems, in order to define the problems and the directions for technology development. Postharvest losses as a whole can exceed 40 per cent of the harvested crop, half of which is attributable to processing. Processing alone requires more time than harvesting and handling operations.

The IITA postharvest research unit has, since 1988, developed an equipment package for the main stages in cassava processing. The package includes a peeling knife, machines for grating,

dewatering, chipping, drying, grinding, and sifting cassava, and a stove with fryer. Each of them takes the cassava one step further toward a particular food preparation. All of them have been tested in pilot locations in Nigeria. Designs are modified during field tests, to adapt the equipment to the work setting. These improved processing methods have now been introduced in a number of villages, where reduction in losses of 50 per cent have been achieved, while the labor requirement and firewood consumption are reduced by 70 per cent and 30 per cent, respectively. Moreover, the new system has improved product quality, and leaves the women with more free time to devote to other activities.

Cowpea production in Africa has increased significantly over the years. While accurate figures are difficult to get, it has been estimated that since 1981 there has been an increase in production of over 200 per cent. While Nigeria and Niger are the two largest producers of cowpea, East and Southern Africa represents another production zone. A recently initiated cowpea program under the auspices of SADCC hopes to address production constraints in this area. After only two years, the project has identified cowpea varieties that are appropriate for Mozambique. As a result, in 1991 there was extensive seed multiplication of the most promising lines, which can now be grown on some 20,000 ha in the next season.

For many years, we at IITA have been convinced that given the proper socioeconomic environment, soybean production would rapidly spread in the savanna of Africa. In these areas, it fits well into crop rotation or intercropping systems with maize, sorghum, and in some areas even rice. Appropriate technologies for soybean production by small-scale farmers and methods for home use and small-scale processing of soybean have been developed during several years of collaborative research. The impact of these research efforts has been recently evaluated in Nigeria, and several positive conclusions emerge:

- A rapid increase in the number of retailers selling soybean in several major cities. A very good example of this is Ibadan, where the number of retailers selling soybean rose from 4 in 1987 to over 400 in 1990. Almost 100 per cent of the soybeans purchased in the markets are used to prepare traditional Nigerian foods.
- The number of small and medium scale industries purchasing and processing soybeans has rapidly increased from 2 in 1987 to 20 in 1990.
- This very strong demand for soybean has now caused soybean production to increase in Nigeria. For example in Benue State, which is in the savanna, soybean production increased from about 11,000 to 60,000 tonnes between 1985 and 1989.
- In 1985 almost all soybean growers were planting a traditional variety that was popular in the 1950s. Now (1991) we find that about 90 per cent of the growers use one or a combination of several improved varieties that have been developed at IITA and the national institutes in Nigeria.

We are the only CG Institute that has genetic improvement programs for cowpea and soybean. While we will maintain a clear African focus, we wish to explore opportunities to make the improved cowpea and soybean germplasm available to national programs in Asia and the Americas. We presently send improved materials of both cowpeas and soybeans to scientists in Asia and the Americas and have been receiving many favorable reports on the potential uses of these varieties. However, if the distribution and testing of these materials had the support of legume or farming system networks that are associated with other Centers, I am sure that the impact would be multiplied many times.

The impact of our maize research is clearly demonstrated by wide adoption of our highly productive and disease resistant genetic material in a large number of countries in sub-Sa-

haran Africa. For example, the Nigerian Federal Office of Statistics data indicate that maize production tripled between 1981 and 1986; it is now estimated to be grown on some 2 million hectares in the Guinea Savanna zone. The preliminary results of our socioeconomic studies also show a wide spread for maize in the northern guinea savanna of Nigeria, where maize has become a major food crop in 96 per cent and a major cash crop in 70 per cent of the villages, compared to 33 per cent and 0 per cent, respectively, in the mid 1970s. In 59 per cent of the villages, it has even become the number one food or cash crop. All farmers used improved varieties in 1989 compared to none in the mid 1970s.

New varieties, in particular the open pollinated variety TZB, produced by IITA in cooperation with Nigerian agricultural research institutes, acted as the main catalyst for change. Improved road communication, the support activities of the Agricultural Development Projects set up under a World Bank scheme, fertilizer subsidies, and the emerging private seed industries were important support elements for this change. TZB has a high yield potential, is resistant to lodging and to the major diseases, and has good grain quality. In trials on farmers' fields, it constantly outyielded local varieties by a margin of 21-115 per cent.

But the widespread cultivation of maize leads also to new production problems. Sustainability of the production systems is currently one of our major concerns, including the increased pressure of certain pests such as the parasitic weed, striga. As reported earlier, we have identified genetic material resistant to striga. Moreover, rotations with grain legumes are studied to ensure sustainable resource management.

The overall impact of our work on biotechnology can only be appraised in the longer term. However, one specific example shows the promise that this work holds for assisting the NARS. A group of 12, mostly young, African scientists attended a first workshop held earlier this year at IITA to obtain hands-on experience

in the use of monoclonal antibodies for the diagnosis of cowpea aphid-borne mosaic virus. This is one of the most important and most variable viruses of cowpea. This IDRC-funded technology transfer project also provided participants with testing kits, antisera, and other essential supplies to enable them to apply their newly acquired skills to survey and assess the importance of the cowpea virus in their home countries. Ultimately, these and future trainees will be in a position to carry out reliable diagnositic studies on other viruses when additional testing kits become available.

The latest major effort in the biological control of the cassava mealybug (CM) has been directed toward Eastern and Southern Africa, the last areas invaded by the CM. Surveys, releases, and follow-up activities have been conducted with the national programs of Mozambique, Malawi, Zambia, Tanzania, Burundi, Rwanda, Uganda, and Kenya. In all these countries, the parasitoid *Epidinocarsis lopezi* has been established and good control of the CM has been reported from most treated areas. Follow-up surveys have also been undertaken by national program staff assisted by IITA scientists in West and Central Africa.

Future Outlook

Now let us look at what the immediate future holds. To begin with, we have started a process of reviewing our medium-term plan. Apart from the need to re-examine previously stated goals and work plans in the light of changed realities of funding, issues such as new CG priorities and the consideration of ecoregional responsibilities must be addressed.

The review of the medium-term plan also provides us with an excellent opportunity to assess what IITA stands for as an organization, and to involve all professional staff in the formulation of goals and objectives to which they should feel fully committed. It is crucial, with our limited resources, that we have shared values and a common belief in what we are trying to achieve.

The initial step taken in the revision of the medium-term plan has been a series of internal institute-wide seminars on each of the Institute's areas of focus. The seminars have been successful in raising issues for debate and we are now poised to establish special focus groups, which will develop analytical frameworks aimed at more specific conclusions. It has provided an excellent opportunity to consider the priorities recently developed by TAC, and to begin to struggle with the very considerable task of trying to operationalize concepts varying from equity and self-reliance to ecoregional responsibilities and cooperation with NARS.

In discussing IITA's vision for the future, the Board of Trustees agreed that this would be an opportune time to widen the geographic focus of the institute, thereby adopting ecoregional responsibilities for the humid forest and moist savanna regions of sub-Saharan Africa. IITA is well placed to adopt such a stance, particularly with regard to issues such as a clear priority for research on resource management, continued efforts to increase genetic adaptation to specific needs by breeding for resistance to specific stresses, a heavy emphasis on building the capability of the national research systems, and the development of farmer-oriented technological innovations.

I believe that I am correct in my assertion that IITA has been somewhat unique in the path we have always embarked upon in addressing the issue of the need for a congruent approach to sustainable agriculture. Therefore, in addition to multidisciplinary commodity programs, a large part of our research efforts has been focused on the challenge of developing sustainable food production systems. This commitment to a systems approach required unconventional structural approaches within the organization, which facilitated scientific interaction and collaboration between resource management, commodity improvement, and plant health scientists. There is much yet to be done and we continue to learn and fine-tune, but perhaps most importantly, we feel we have laid the groundwork on which we can build.

As we move forward into a new medium-term plan period, bearing in mind the prospect of a wider ecoregional responsibility, we are fully aware that this implies increased collaboration and partnership with other institutions. Our experience with the systems-based approach has clearly demonstrated that the highest priority must be given to integration of work with other centers and national research systems.

The strategies for implementation of the needed cooperative linkages will be critical. As we all know, the CG presence in sub-Saharan Africa is complex, and it is at times confusing to our partners in the national systems. I believe we must all devote our energies to harmonizing the interactions among us and to maximizing the benefits for those we strive to assist. For many of us, the phrase 'comparative advantage' has been overused, but I think it conveys the message on which we must focus. In most situations, we must strive to determine who is better suited to perform a given task with maximum benefit for all, and the organization so identified must then take charge.

I realize that any organization that intends to take up an ecoregional responsibility in sub-Saharan Africa at this particular stage faces numerous problems, especially because the discussion within the CG on how to implement this concept has not been finalized. In addition, effective cooperative arrangements must be worked out with the other International Centers, to facilitate the activities related to their specific mandates.

In closing, I would say that I consider this is an exciting time to be involved in the CG system. It is a time of great change, which I feel will have positive consequences. TAC is to be congratulated on the efforts put into articulating the issues and providing the background against which we must formulate our strategies. I believe that this will be most critical. On behalf of IITA, I welcome the challenge.