PN-ABK-239
75205
5-168
FINAL

THIARA (TAREBIA) GRANIFERA (LAMARCK)

AN AGENT FOR BIOLOGICAL CONTROL OF *BIOMPHALARIA*

WILLIAM A. SODEMAN, JR., M.D.

DIVISION OF GASTROENTEROLOGY
DEPARTMENT OF INTERNAL MEDICINE
3000 ARLINGTON AVENUE
TOLEDO, OHIO 43699-0008, USA

2 6 1991

THIARA (TAREBIA) GRANIFERA (LAMARCK)

AN AGENT FOR BIOLOGICAL CONTROL OF *BIOMPHALARIA*

WILLIAM A. SODEMAN, JR., M.D.

DIVISION OF GASTROENTEROLOGY
DEPARTMENT OF INTERNAL MEDICINE
3000 ARLINGTON AVENUE
TOLEDO, OHIO 43699-0008, USA

ABSTRACT

Thiara (Tarebia) granifera is a Prosobranch snail with a native range from Madagascar to Hawaii including most countries in Southeast Asia and the Philippines. It is found as far north as the Ryukyu Islands. It has been widely transported and now has an extensive New World distribution. Spontaneous introduction of *T. (T.) granifera* into Puerto Rican waters containing *Biomphalaria glabrata* (Say), a Neotropical intermediate host of *Schistosoma mansoni*, was noted to cause suppression of the intermediate host snail. A reported trial of *T. (T.) granifera* to control *B. glabrata* in St. Lucia showed similar suppression of this intermediate host snail. Studies reported here suggest that this suppression is competitive, not predatory. The competitive mechanism is unknown but there is some suggestion that *Thiara* release into the water a irritant ot toxic compound that causes *Biomphalaria* to flee or succumb. *T. (T.) granifera* is environmentally safe. It is a first intermediate host for *Metagonimus yokogawai* but not for *Paragonimus westermani*. Early reports misidentified the association between *T. (T.) granifera* and *P. westermani* and this has been incorporated into parasitologic folklore in spite of the subsequent retraction of this association.

Suppression is time limited. Suppression has been best demonstrated in flowing water. In selected sites this is an effective snail control technique.

There has been some interest in the use of *Thiara (Tarebia) granifera* (Lamarck) as a biologic agent in the control of intermediate hosts of schistosomiasis. There has been little published concerning the utility of this snail.(Ferguson *et al*, 1968; Ferguson, 1977; Prentice, 1983; Sodeman and Raccurt, 1984; Jordan, 1985)

BIOLOGY

Diagnosis: *Thiara (T.) granifera* is an ovoviviparous, parthenogenetic, melaniid snail native to the Indopacific radiation. The shell is turreted with the body whorl in the adult snail more than half the height of the entire shell. The sculpture of rectangular knobs follows a spiral pattern. Sutures are distinct and the whorls are flat sided. This snail can be distinguished from closely related *Thiaridae* by the anatomy of the female reproductive tract. The seminal receptacle is lengthened to join the diverticulum and the connecting duct midway between the seminal receptacle and the oviduct. Comparative diagnosis of the *Thiaridae* has been reviewed by Pace (1973).

Geographic Distribution: *T. (T.) granifera* inhabits the Indo-Pacific radiation. It can be found from Madagascar through India and Southeast Asia. In the Pacific basin it is found In the Philippines and the Society Islands as well as Taiwan, the Ryukyu Islands and Hawaii. In the 1940's *T.(T.) granifera* was introduced into the United States and sold widely as aquarium snail. Permanent colonies became established in Florida and Texas. Both of these were in constant temperature springs which provided protected overwintering for this cold sensitive

snail. Subsequently the snail has spread (Fig. 1) from Florida to Puerto Rico (1953), Vieques (1964), Dominican Republic (1967), Grenada (1970), Venezuela (1970), Haiti (1972), Dominica (1978), St. Lucia (1979), Antigua (1980) and Costa Rica (1983).(Fig. 1)(Ferguson, 1977; Prentice, 1980; Sodeman, unpublished) Colonies have also been reported from Guadeloupe and Martinique. The mechanism for most of this spread is unknown.

One study (Sodeman and Raccurt, 1984) of the spread within Haiti, demonstrated that over two decades the snail was seen to spread widely, eventually involving almost all suitable habitats.

ENVIRONMENTAL IMPACT

T.(T.) granifera is a detritus feeder. It browses on algae and diatoms and does not feed on vegetation. Rice and other water grown plants are not damaged by snail feeding. These snails are adapted to fast moving water by their streamlined shape and hold their station well during sudden changes in current velocity a feature which enhances the utility of these snails in environments subject to sudden inundation. In the optimum environment it is prolific. Sand bars in free running streams are often coated with shoals of *Thiara*. There have been no reports or field observations of these snails proliferating to the point where they would plug water intakes or irrigation equipment. Stable populations in stillwater environments are at much lower densities.

PARASITOLOGY

T.(T.) granifera came to medical attention in 1917 when it was identified as a first intermediate host of *Paragonimus westermani* (Kerbert) by Nakagawa (1917). Nakagawa was working in Taiwan searching for the then unknown intermediate stages of *P. westermani*. He erroneously identified cercaria shed from *T. (T.) granifera* as *P. westermani*. He quickly established that this association was erroneous and published a correction. The initial error was published in English in the *Journal of Experimental Medicine* and received wide circulation. The subsequent correction appeared in a paper in *Tokyo Iji Shinshi* No. 2062 (Nakagawa, 1918) in Japanese and apparently was overlooked by most workers. The error has become imbedded in parasitologic folklore. I can find no authentic reports of *T. (T.) granifera* identified as a first intermediate host for *P. westermani*.

T.(T.) granifera has also been identified as a first intermediate host for *Metagonimus yokogawai* (Abbot, 1952), as well as a number of flukes that do not parasitize man (Ito, 1964; Malek, 1962; and Sodeman, in press). Transfer of *T.(T.) granifera* to new ranges would seem to pose little if any parasitologic risk for man.

ROLE IN SNAIL CONTROL

Ferguson et al (1968) in the discussion of a paper on the control of schistosomiasis on Vieques Island, Puerto Rico mentioned the possibility that the

encroachment of *T.(T.) granifera* might be a factor in the fall in prevalence of schistosomiasis in Puerto Rico which they had noted at that time. Murray in 1970, made an anecdotal observation during a discussion of a paper by Taylor (1970) that *Elimia comalensis* (Pilsbry) was displaced from much of its habitat in Texas by introduced *T.(T.) granifera*. Ferguson, working in Puerto Rico with a series of collaborators noted displacement of *B. glabrata* from a number of river, stream, pond, and lake habitats by naturally introduced *T.(T.) granifera*. He performed a number of ecologic studies of this snail all of which remain unpublished. A summary of his observations on competitive displacement in Puerto Rico was published in 1977. While *B. glabrata* was suppressed or displaced from a number of sites, this coincided with other environmental changes and it was not clear that the introduction of *T. (T.) granifera* was the responsible factor.

In an attempt to clarify the role that *T.(T.) granifera* might play in displacing *B. glabrata*, Prentice (Prentice,1983; Jordan,1985) initiated controlled trials of *T. (T.) granifera* in St. Lucia. Five controlled trials and one uncontrolled trial were carried out. Five sites consisted of marshy areas drained by small streams. The sixth testing site involved banana drains. All sites were successfully colonized by introduced *T.(T.) granifera*. The periods of observation varied from 6 to 36 months. *Biomphalaria* were eliminated at 4 of the 6 sites. *Biomphalaria* persisted at one of the marshy sites and in the banana drains but at lower densities in both areas. Population densities of *T.(T.) granifera* about twice the density of

Biomphalaria were necessary to observe and effect.

Several additional observations and qualifications may be made. The observation periods were short and the long term relationship between *T.(T.) granifera* and *B. glabrata* was not evaluated. Several sites desiccated then refilled with resurgence of *Biomphalaria* in some and of *Thiara* in other sites. The desiccation was a feature of both sites where elimination of *Biomphalaria* was incomplete. Ferguson (1977) made similar observations in Puerto Rico. Environmental changes, particularly desiccation, can result in reversals in the balance between these two snails.

Robart *et al* (1976) reported the presence of *T. (T.) granifera* in Haiti with all of the snails found east of 72°15′. Subsequent studies by Sodeman and Raccurt (1984) show extension of the range of the snail throughout the country. Many of the sites now colonized by *Thiara* also contain *Biomphalaria*, either *Biomphalaria havenensis* (Pfeifferi), *Biomphalaria helophila* (Orbigny) or *B. glabrata*. Stable colonies of *Thiara* and *Biomphalaria* coexist.

A similar coexistence of a *Biomphalaria* species and *T.(T.) granifera* was observed at a fish farm outside of San José, Costa Rica in 1983 (Sodeman, unpublished). Here native *Biomphalaria obstructa* (Morelet) were abundant in rearing ponds, while *T.(T.) granifera*, thought to be brought in when *Tilapia* were introduced to the farm, share ponds and outflow ditches. What is missing is data which could identify whether this coexistence represents a response to a particular environment, a stable long term balance into which the snails settle, or

in fact a much reduced and partially controlled population of *Biomphalaria.*

MECHANISMS

There is no clear understanding of how or why *Thiara* causes displacement of *Biomphalaria*. They do not compete for food and do not share the same preferred habitat. Prentice (Jordan, 1985) was unable to demonstrate an effect of *Thiara* conditioned water on the fecundity or development of *B. glabrata.*

In similar experiments I have been able to demonstrate a short term effect on adult *B. glabrata* of shared residence with *Thiara* in small aquaria. I have set up isolated tanks with balanced numbers of *Biomphalaria* and *Thiara* (5/5) and find that after twenty days the *Biomphalaria had all died.* There is no evidence of predation by *Thiara* on *Biomphalaria.* There was no apparent explanation for the maotality of the *Biomphalaria.* Too few trials were performed to permit statistical analysis although it would seem significent that all *Biomphalaria* placed in tanks with *Thiara* died (100% mortality) while the controls all survived through day forty-two. *Thiara* in control and trial tanks all survived through forty-two days.

A single trial was done with conditioned water. *Thiara* and *Biomphalaria* were each placed in seperate tanks for thirty days. The snails were removed and five *Biomphalaria* were placed in the tank conditioned with *Thiara* and five *Thiara* were placed in the tank conditioned with *Biomphalaria.* The test *Biomphalaria* had all crawled out of the water by day 4 and died. The *Thiara*

remained unaffected and alive. At this point the colonies were lost when the laboratory was sprayed. This also occured after the point when trips to Haiti were curtailed. Clearly these findings bear repeating for confirmation.

Prentice (1983) noted that there seemed to be a mass effect. When the density of Thiara about doubles that of *Biomphalaria* then the effect on the *Biomphalaria* population becomes apparent. *T. (T.) granifera* is parthenogenetic and ovoviviparous. Eggs are laid into a brood pouch opening just beneath the edge of the mantle. Abbott (1952) described the release of one to two juvenile snails daily by mature adults.

I have been able to confirm that these high reproductive rates are obtainable in a laboratory setting. Four plastic tanks were set up as follows. Each tank was one meter square and twenty centimeters deep. Each tank was prepared with a pea gravel (0.5 cm diameter avg.) siant and filled to a depth of five cm. with conditioned water. Pumps circulated the water from the bottom of the slant to a trough above the top of the slant. (Fig. 2) Water flow was adjusted to cascade a continuous running stream down the slant. Thiara is best adapted to rapidly running water. Tanks were permitted to run until a visible film of green algae formed on the gravel. Then ten, one and one half centimeter *T. granifera* were introduced into each tank. Tanks were harvested at the end of a 30 day interval. In excess of 600 snails were found in each tank.

FIELD STUDIES

Over five year period I have carried out studies of the ability of *T. (T.)*

granifera to colonize various sites on the North coast of Haiti. In the field in Haiti results have been variable. Following a series of preliminary visits to Haiti and many delays, occasioned by the recent intervals of governmental and social unrest, the field component of the study of the effect of *Thiara granifera* on populations of *Biomphalaria* sp. and other freshwater mollusks was initiated in February 1987. An initial survey was carried out on a 9 km stretch of the Rivere Port Margot, downstream from the town of Port Margot, and the Rivere Limbe, downstream from the city of Limbe. Five sites were selected along the Rivere Port Margot on the north coast of Haiti. This river has a resident population of *Thiara* and the sites selected were free of established colonies of this snail. Adult *Thiara* (1-1.5 cm) were seeded into each site. Each seeding involved 1000 adult snails. These were followed over 9 months. Five river sites were identified, mapped, and photographed on the Rivere Port Margot as follows:

SITE 1 (PM1R) Heavily vegetated stream site on a "braid" of the river just below Port Margot. This site is on the East bank of the stream adjacent to the main trail fording the river. No *Thiara* were present, but *Biomphalaria* sp. and *Lymnaea* sp. were present.

SITE 2 (PM2R) East bank of river due East of Site PM2F (field site) on the road paralleling the East bank of the river. This was a clothes washing spot heavily utilized by women. No snails were present.

SITE 3 (PM3R) This is a sand and gravel bank on the East bank of the river. This wide spot in the stream has slow flow over a gravel and sand base. The site was sparsely vegetated. This area is heavily utilized for washing. No snails were present.

SITE 4 (PM4R) Wide spot at a bend in river. Close to road. East bank adjacent to irrigated rice field. Site is on a gravel and sand bank Jutting into the river at the bend flanked by a backwater. It was sparsely vegetated. No snails were present.

SITE 5 (PM5R) River site east bank close to road (visible). Adjacent to cluster of homes and site was heavily utilized as a washing spot. Vegetated sand bar causes a backwater at site. No snails were present.

Each of these sites was surveyed, then revisited on 2/14/87 at which time 1,000 live medium sized (1-1.5 cm length) *Thiara granifera* were released in each site.

Collections began in February of 1987 and continued through September of that year. The initial collection was followed by the release of 1000 adult (1-1.5 cm) *Thiara* at each site in the Port Margot valley. Snails were collected from heavily infested areas of the Rivere Port Margot and transferred in water immediately to the point of release.

All of the collections at river sites were done by three experienced collectors. Generally these river sites are free of vegetation and have a sand or gravel bottom. Snails are found in shallow water which frequently has rapid flow. Sampling these snail populations in a reproducible fashion has long been a problem. The usual snail scoops are likely to dislodge many snail that would then be swept away by the current. Picking snails either by hand or with a forceps is also subject to some loss as well as missed snails. The smaller *Thiara* are hard to distinguish on a gravel bottom. To facilitate these collections and to keep them uniform from river site to river site and from visit to visit a collecting device was designed as illustrated in Fig 3. An stainless steel, angle iron frame was welded with and opening 30 cm. on a side. The two sides of the device were screened with perforated stainless steel sheet. One end of the sampler was left open and the other end was closed with a curved stainless steel perforated sheet. An hinged door was provided at one corner. The device was dropped into shallow water with the open end of the sampler facing upstream. The bottom within the opening of the sampler was carefully stirred to dislodge any snails. These dislodged snails are swept by the current into the closed end of the sampler. After the sampler is removed from the water the hinged door in the corner is opened and the snails, plus gravel and sand are washed into a shallow plastic basin. The collectors then carefully cull the snails from the basin recording their species, number and size. Ten drops of the sampler are carried out at each river site. This represented a sample of 9000 square centimeters of bottom per site.

The data reported below is the number of snails collected in these standard samples at each visit.

COLLECTIONS AT THE RIVER SITES ON THE RIVER PORT MARGOT

PM1R - Just below Port Margot, heavily vegetated area on the West bank.

	2/12/87	3/25/87	6/10/87	9/02/87
Thiara				
Small	-	2	15	26
Medium	-	7	20	66
Large	-	-	1	2
Biomphalaria sp.	-	3	9	7
Lymnaea sp.	-	5	2	-

PM2R - River site. Bank directly opposite site 2F. Washing spot cut bank opposite

	2/12/87	3/25/87	6/10/87	9/02/87
Thiara				
Small	-	-	-	2
Medium	-	2	2	12
Large	-	-	2	-
Biomphalaria sp.	-	-	-	-
Lymnaea sp.	-	-	-	-

PM3R - Start on road at old sugar works 100 m upstream from PM3F Walk down hill to river than downstream loom to hook with grass in bank.

	2/12/87	3/25/87	6/10/87	9/02/87
Thiara				
Small	-	-	-	5
Medium	-	-	-	6
Large	-	-	-	1

PM4R - Visible from road wide washing spot. Mango on E. bank. Hook at top also E. bank upstream from Mango

	2/12/87	3/25/87	6/10/87	9/02/87
Thiara				
Small	-	-	80	13
Medium	-	79	96	4
Large	-	12	10	6
Biomphalaria sp.	-	-	-	-
Lymnaea sp.	-	1	-	-

PM5R - Start at road. Yellow house 2 without blue door. Steep trail down to river. Hook on E. bank downstream from overhanging tree.

	2/12/87	3/25/87	6/10/87	9/02/87
Thiara				
Small	-	-	-	10
Medium	-	-	-	43
Large	-	-	3	27
Biomphalaria sp.	-	-	-	-
Lymnaea sp.	-	-	-	-

At four sites small colonies of *Thiara* were found on subsequent visits but there

was really no assurance that these snails were related to the seeding. The rainy season caused the river to go into spate and *Thiara* from other sites in the river could easily have been washed into these locations. Two additional collections were attempted, one in early 1988 and the other in August 1988. Civil unrest prevented completion of data collection on both of these trips. After the August 1988 visit the situation in Haiti had become sufficiently uncertain that no further trips were planned and the field study was terminated. At this point, actually in late 1987 USAID had withdrawn support for SNEM (National Service for Endemic Diseases) which caused the loss of my Haitian collaborator, Dr. Yarseth Deverseau, and the loss of transportation and field support. At the visit in August 1988 I discovered that most of the field supplies stored at the, now defunct, SNEM office in Cap Haitian were missing, presumably looted.

The Rivere Limbe flows down the valley adjacent o the valley of the Rivere Port Margot. It too has a resident population of *Thiara.* Five control river sites adjacent to the river were selected, mapped and photographed on the Rivere Limbe as follows:

SITE 1 (L1R) This site is a popular washing spot on the west bank of the Rivere Limbe about lOOm below the crossing of Rivere Rb100. Collection yielded *Thiara granifera* - small 4, medium 72 and large 2.

SITE 2 (L2R) This site is at a pool which is a washing spot on the west bank of the river down stream from Site 1 (L1R). Collections

yielded *T. granifera* - small 10, medium 66, large 4.

SITE 3 (L3R) This snail site downstream from Site 2 (L2R) is on the East bank. This is a popular washing spot and is across the stream from the main trail. Collection yielded *T. qranifera* small 10, medium 200 and large 2.

SITE 4 (L4R) Large gravel and sand bar on East side of river. Popular washing spot downstream from Site 3. Collection yielded *T. granifera* - small 5 and medium 77.

SITE 5 (L5R) Site on west bank of river. Washing spot and adjacent to ford at point where new road to Bas Limbe approaches river for the first time. Collection yielded *T. granifera* - medium 101, large 1.

COLLECTIONS AT RIVER SITES ON THE RIVER LIMBE

L1R - 100m Below bridge Rt 100. Directly at Bank across from two large breadfruit trees on west.

	2/13/87	3/26/87	6/11/87	9/02/87
Thiara				
Small	4	70	117	20
Medium	72	300	49	42
Large	2	24	1	7
Biomphalaria sp.	-	-	-	-

L2R - Down river out of sight of bridge. Pool below a washing spot. Bananas on the East and cane o the West. Site is on the West.

	2/13/87	3/26/87	6/11/87	9/02/87
Thiara				
Small	10	44	-	47
Medium	66	370	3	42
Large	4	1	-	-
Biomphalaria sp.	-	-	-	-
Lymnaea sp.	-	-	-	4

L3R - Down river. Steep bank West. Site East. Opposite "curved tree. Sound bottom. Slow flow.

	2/13/87	3/26/87	6/11/87	9/02/87
Thiara				
Small	10	1	-	21
Medium	200	1171	5	7
Large	2	98	-	2
Biomphalaria sp.	-	-	-	-
Lymnaea sp.	-	-	-	-

L4R - Large wide sand bar on East (site on East.) Cut bank on West. Sound bottom. Slant tree across and just up river from site.

	2/13/87	3/26/87	6/11/87	9/02/87
Thiara				
Small	5	82	7	-
Medium	77	148	17	3
Large	-	26	1	-
Biomphalaria sp.	-	-	-	-
Lymnaea sp.	-	-	-	-

L5R - Site on the bank just up river from the ford at Garde Champete . There is a cut bank on the East.

	2/13/87	3/26/87	6/11/87	9/02/87
Thiara				
Small	-	101	1	Highwater
Medium	101	223	5	Highwater
Large	-	23	1	Highwater
Biomphalaria sp.	-	-	-	Highwater
Lymnaea sp.	-	-	-	Highwater

Five control sites with established colonies of *Thiara* were selected in the Rivere Limbe. This river ran parallel to the Port Margot in the adjacent valley. Marked seasonal fluctuation was seen in the snail populations at these sites as the rainy season progressed. Snail density fell as the rainy season progressed.

Careful surveys at each visit showed that there were always some areas of the river with shoals of *Thiara* blanketing a sand bar but the location of these shoals varied seasonally. While *Biomphalaria* are found in rivers, it is not a favored location. Rivers are a favored location for *Thiara*. Riverine colonies of *Biomphalaria* and *Thiara* have little overlap in their preferred habitats within the river bed and it seems unlikely that they would be effective in playing any role

in competitive displacement in this setting.

Biomphalaria do favor ponds, swamps and irrigated fields. Five sites involving cultivated fields on the flood plain of the Rivere Port Margot were selected. Similar control sites were selected on the flood plain of the Rivere Limbe. After survey one thousand adult (1.5 cm) *Thiara* were released at each site on the Port Margot. Five field sites were identified, mapped, and photographed on the Rivere Port Margot as follows:

SITE 6 (PM1F) This field site consists of a large irrigated field to the West of the road and approximately 500m from the river. There is a pool 10m diameter with slow inlet and outlet flow in the center of the field. This pool was selected as the site. A 20 man/minute collection reveals *Thiara qranifera* 23, *Lymnaea* sp. 20, *Biomphalaria* sp. 37, Limpets 9.

SITE 7 (PM2F) This site is a 2m stream draining on vegetated field located approximately midway between the road and river (400m west). There was slow flow downstream from the site and it is a popular local washing spot. A 20 man/minute collection revealed no snail present.

SITE 8 (PM3F) This site is located at the west end of a cement culvert passing beneath the road and over 0.5K from the river. The pool was 2x5m and heavily vegetated. It drains from surrounding irrigated rice

fields. A 20 man/minute collection yielded no snail.

SITE 9 (PM4F) This site is at a cement culvert draining beneath the road. Site was on the West bank and about 400m back from river. The site is a small pool 2x4m which drains irrigated rice fields. A 20/man minute collection yielded *T. granifera* -0, *Lymnaea* sp. 51, *Biomphalaria* sp. 203.

SITE 10 (PM5F) This site, a large irrigated field just to the West of the road, is adjacent to the river, but separated by a high earthen bank. The field is used for wet rice and a stable pool of water remains in the field. A 20 man/minute collection revealed no snails.

Field sites were generally heavily vegetated streams, pools, or canals. These were sampled by a standard man/minute technique. Two experienced collectors each equipped with a circular scoop 15 cm. in diameter would sample the vegetation for ten minutes. The species, number and size of snails collected during twenty man/minutes was recorded for each sit at each visit. Care was taken to sample the same location at each visit.

Five river sites adjacent to the river were selected, mapped and photographed on the Rivere Limbe as follows:

SITE 6 (L1F) Site is at a cluster of homes Just past the turn off of

road to Bas Limbe from Rt. 100. Site is a small 1m stream to east of road. A 20 man/minute collection yielded 1 *Lymnaea* sp.

SITE 7 (L2F) Small (2m) stream and washing spot immediately to the west of the village. This drains irrigated fields largely wet rice. A 20 man/minute collection yielded *T. granifera* small 46, medium 66, large 4, plus 1 *Lymnaea* sp. and 1 *Biomphalaria* sp.

SITE 8 (L3F) Small stream and ford over the stream in a cluster of homes. Drains a vegetated area and serves for limited washing. A 20 man/minute collection yielded 1 *T. granifera.*

SITE 9 (L4F) Stream site to West by road and probably 0.5K from river. Drains large fields of wet rice. Heavily vegetated. A 20 man/minute collection yielded *T. granifera* small 40, and medium 80.

SITE 10 (L5F) Site is at north end of Bas Limbe. This is a 2m drainage ditch to west of road flowing between the road and a line of homes. A 20 man/minute collection yielded *T. granifera* small 104, medium 106, large 2, and *Biomphalaria* sp. 20, *Lymnaea* sp. 1.

COLLECTIONS AT FIELD SITES ON THE RIVERE PORT MARGOT

PM1F - Big irrigated field to W of rd. Bois de Eau. Houses E. of Rd. Lane of banana trees along Rd.

	2/14/87	3/25/87	6/10/87	9/02/87
Thiara				
Small	-	1	1	9
Medium	23	19	12	2
Large	-	3	4	2
Biomphalaria sp	37	99	21	18
Lymnaea sp.	20	13	7	9
Limpets	9			

PM2F - Midway between Blue house and river. Stream 2m flows through an irrigated field.

	2/14/87	3/25/87	6/10/87	9/02/87
Thiara				
Small	-	46	211	151
Medium	-	50	33	36
Large		1	85	25
Biomphalaria sp.	-	-	-	-
Lymnaea sp.	4	-	-	-

PM3F - Irrigated field right and left. Small culvert site on West side of road. House just to north.

	2/14/87	3/25/87	6/10/87	9/02/87
Thiara				
Small	-	-	3	-
Medium	-	4	-	-
Large	-	-	-	-
Biomphalaria sp.	-	1	63	40
Lymnaea sp.	-	1	1	-

PM4F - From *Pyramide Astral* sign 6 bridges North. Small pool at right field at culvert under road.

	2/14/87	3/25/87	6/10/87	9/02/87
Thiara				
Small	1	-	3	-
Medium	-	-	1	-
Large	-	-	-	-
Biomphalaria sp.	293	496	251	145
Lymnaea sp.	51	28	18	11

PM5F - Large irrigated field just past super site to West of road.

	2/14/87	3/25/87	6/10/87	9/02/87
Thiara				
Small	-	-	-	1
Medium	-	-	-	-
Large	-	-	-	-
Biomphalaria sp.	-	5	284	55
Lymnaea sp.	-	7	2	-

1,000 *T. granifera* released at each site on 2/14/87. At Port Margot two of the sites were irrigated fields that were diked and held standing water with no visible flow. Fewer than 25 Thiara were found at these sites at subsequent visits. Two of the sites were small pools adjacent to the road and to cultivated fields. Each pool was 5 meters in diameter and one meter deep. There was no visible flow of water at either if these sites. The maximum collection of *Thiara* at these sites on any subsequent visit was 4. The last Port Margot site was an irrigated field traversed by a 2 meter wide slowly flowing stream. Snails were released at the stream edge. The population of *Thiara* slowly rose and leveled off suggesting the establishment of a resident population.

COLLECTIONS AT FIELD SITES ON THE RIVERE LIMBE

L1F - Stream - 2 m wide. Just down the road to Bas Limbe from Rt 100. Site on East.

	2/13/87	3/26/87	6/11/87	9/02/87
Thiara				
Small	-	-	-	-
Medium	-	-	-	-
Large	-	-	-	-
Biomphalaria sp.	-	8	12	18
Lymnaea sp.	1	-	21	8

L2F - Stream 3 m wide. Stream washing spot just to West of village (where ford at LF3 is located).

	2/13/87	3/26/87	6/11/87	9/02/87
Thiara				
Small	46	271	97	15
Medium	66	66	26	6
Large	4	44	4	1
Biomphalaria sp.	1	14	7	17
Lymnaea sp.	1	2	-	7

L3F - Small stream. Ford at the North end of village Site is East of the road.

	2/13/87	3/26/87	6/11/87	9/02/87
Thiara				
Small	1	3	-	DRY
Medium	-	1	-	DRY
Large	-	-	-	DRY
Biomphalaria sp.	-	-	1	DRY
Lymnaea sp.	-	1	-	DRY

L4F - Side stream to the West of the road. Walk through field to get to the site. Police post on road. Site is upstream 20 m.

	2/13/87	3/26/87	6/11/87	9/02/87
Thiara				
Small	40	237	191	88
Medium	80	50	23	49
Large	-	22	23	9
Biomphalaria sp.	-	10	3	16
Lymnaea sp.	-	-	-	-

L5F - In Bas Limbe near north end by bolled tree. Drainage ditch is site 2 m on West.

	2/13/87	3/26/87	6/11/87	9/02/87
Thiara				
Small	104	118	381	293
Medium	105	50	76	256
Large	2	3	36	13
Biomphalaria sp.	20	20	2	1
Lymnaea sp.	1	5	-	-

The five control sites on the River Limbe included four with established *Thiara* populations. One of these four became inundated in the rains and the *Thiara* density fell. The other three sites were small (2 meter) sluggish streams, not inundated during the rains. Here the *Thiara* population remain at a stable density throughout the study.

Prentice (1983 and Jordan, 1985) on St. Lucia released *Thiara* in several environments. He reported excellent results in swampy fields that were drained by small streams. He noted rapid population expansion and subsequent displacement of *Biomphalaria.* *Thiara* also did well in semipermanent environments (banana drains) but the effect on *Biomphalaria* was not clear. These results, in terms of establishing *Thiara* populations, do not differ from the

experience in Haiti.

Incidental observations were also made at a site on the Plaine du Nord, also on the North coast of Haiti. This rice field harbors *Biomphalaria glabrata* and *Thiara (T.) granifera*. The snails were first reported in 1977 (Ripert *et al*, 1977) and both have remained, coexistent, through ten years of observation (Racurret and Sodeman, 1985). This field is alternately flooded and dried with the wet rice cultivation. *Thiara* survive in and adjacent pool and *Biomphalaria* aestivate in the mud during the intervals when standing water is not present. During the wet periods the two populations remain balanced and tolerant of one another.

CONCLUSION

A great deal remains unknown concerning the interactions of *Thiara* and *Biomphalaria*. The most important unknown is the mechanism of this interaction. The long term interactions between these two snails, especially In environments where sites periodically dry, is unknown. There certainly is sufficient information from the studies reported by Ferguson (1977) and the studies reported here to establish that *Thiara* and *Biomphalaria* can coexist in the same environment for long periods. Only in environments where high densities of *Thiara* are supported is it likely that one would get effective long term suppression or eradication of *Biomphalaria*. In sites less suitable for *Thiara* it is possible to stimulate a short lived *Thiara* population explosion. This will suppress or perhaps eliminate a resident *Biomphalaria* population but the possibility of later emergence or

reintroduction of *Biomphalaria* will always exist. None-the-less repeated seasonal control of the *Biomphalaria* population may be helpful in suppressing transmission of *S. mansoni*.

There is little information concerning the response of snails other than *B. glabrata* to the introduction of *Thiara(T.) granifera*. With the limited information in hand several observations can be made.

I. *Thiara (T.) granifera* and *Biomphalaria glabrata* do not share optimum environments. *Biomphalaria* do best in still water and *Thiara* where there is a current. Relatively few *Thiara* are needed to establish a growing colony in flowing water. Since there are relatively fewer *Biomphalaria* in this environment critical population densities that provoke suppression of *Biomphalaria* are more easily reached. Where there are fewer *Biomphalaria* there is less need for control. In stillwater environments it probably will take much larger numbers of added *Thiara* to be effective. The more *Thiara* "friendly" the environment the smaller need be the initial inoculum size. As mentioned above the more *Thiara* "friendly" the environment the less likely that *Biomphalaria* will be present in the first place. Fortunately there is enough overlap, as evidence by the studies reported so far, that there are occasions where competition from *Thiara* can suppress and even eliminate *Biomphalaria*. With the usual limitation of resources available to any control program there needs to be careful selection of sites where this strategy is to be employed.

II. Introduced adult *Thiara* will begin to release young immediately. One thousand snails theoretically are capable of producing a population of 20,000 in ten days and 60,000 in a month. *Thiara* are easily harvested in rivers in the tens of thousands. It represents "low tech" snail control. There are limits to the growth that a given environment will support but this does not preclude initial expansion of the population at a site well beyond these limits. Even in less suitable habitats for *Thiara* if the inoculum is large enough this will permit the initial expansion of a *Thiara* population to the point where it would displace *Biomphalaria* but a later fall to the stable density that the site can support. After reaching a stable population density reintroduction of *Biomphalaria* or adjustment of density ratios because of seasonal change, usually drying, may allow reemergence of *Biomphalaria* and balanced survival of both snails. Effective control at semipermanent sites will need repeated refreshing of the *Thiara* population to continue the suppression of the *Biomphalaria*.

III. *Thiara* are not effective agents for control of *Biomphalaria* in rivers. In rivers the ideal environment for *Thiara* and *Biomphalaria* have little if any overlap. Seeding sites along rivers that contain *Biomphalaria* with *Thiara* is usually rapidly followed by a redistribution of *Thiara* to more suitable sites in the river bed. Rivers are open environments that lack necessary restriction on migration which are necessary for displacement to be effective.

IV. *Thiara* are not effective for control of *Biomphalaria* in still water. Short of massive transfer of *Thiara* into still water it is not possible to achieve population densities which remain high enough for long enough to effectively displace *Biomphalaria*.

V. The effect of *Thiara* on *Bulinus* species is unknown. The only reported studies of displacement involve *Biomphalaria glabrata*. Anecdotal observations suggest that some other snails may also be displaced by *Thiara* but no controlled studies have been reported.

VI. One possible mechanism for the effect of *Thiara* on *Biomphalaria* is the release into the water of some compound which is irritant or toxic for the *Biomphalaria*. Additional studies are desperately needed.

BIBLIOGRAPHY

Abbott, R. T. 1952. A study of an intermediate snail host *(Thiara granifera)* of the oriental lung fluke *(Paragonimus)*. *Proceedings of the U. S. National Museum*, 102: 71-116.

Ferguson, F. F. 1977. *The role of Biological Agents in the Control of Schistosome-Bearing Snails*. U. S. Department of HEW/PHS.

Ferguson, F. F., J. R. Palmer and W. R. Jobin 1968. Control of schistosomiasis on Vieques Island, Puerto Rico. *American Journal of Tropical Medicine and Hygiene*, 17:858-863.

Ito, J. 1964. A monograph of cercariae in Japan and adjacent territories. In: *Progress of Medical Parasitology in Japan*, Vol I. Edited by K. Morishita, Y. Komiya, and H. Matsubayashi. Meguro Parasitological Museum, Tokyo. 753 p.

Jordan, P. 1985. *Schistosomiasis: The St. Lucia Project*. Cambridge University Press,Cambridge. 442 p.

Malek, E. A. 1962. *Laboratory Guide and Notes for Medical Malacology*. Burgess, Minneapolis. 154 p.

Murray, H. D. 1970. Discussion of Dr. Taylor's paper. *Malacologia*, 10:33-34.

Nakagawa, K. 1917. Human pulmonary distomiasis caused by *Paragonimus westermani*. *Journal of Experimental Medicine*, 26:297-323.

Nakagawa, K. 1918. Further notes on the study of the human distome, *Paragonimus westermani* (Japanese). *Tokyo Iji Shinshi*, No. 2062.

Pace, G. L. 1973. The freshwater snails of Taiwan (Formosa). *Malacological*

Review, Supplement 1, 1-118.

Prentice, M. A. 1980. Schistosomiasis and its intermediate hosts in the Lesser Antillan islands of the Caribbean. *Bulletin of the Pan American Health Organization*, 14:258-268.

Prentice, M. A. 1983. Displacemant of *Biomphalaria glabrata* by the snail *Thiara granifera* in field habitats in St. Lucia, West Indies. *Annals of Tropical Medicine and Parasitology*, 77:51-59.

Robart, G, G. Mandahl-Barth and C. Ripert 1976. Inventaire, repartition geographique et ecologie des mollusques dulcaquicoles d'haiti (caraibes). *Department de L'Agriculture, des Ressources Naturelles et du Developpement Rural*, 2(4)20:63.

Raccurt, C. P., W. A. Sodeman Jr., G. L. Rodrick and W. P. Boyd 1985. *Biomphalaria glabrata* in Haiti. *Transactions of the Royal Society of Tropical Medicine and Hygiene*, 79:455-457.

Sodeman, W. A. Jr. in press. Mollusks involved in disease transmission. in Strickland, G. T. ed. *Hunter's Tropical Medicine 7th Ed.*, W. B. Saunders Company, Philadelphia.

Sodeman, W. A., Jr. and C. P. Raccurt. 1984 The spread of *Thiara granifera* in Haiti. *XI International Congress for Tropical Medicine and Malaria*, p143.

Taylor, D. W. 1970. Western freshwater mollusks. *Malacologia*, 10:33.

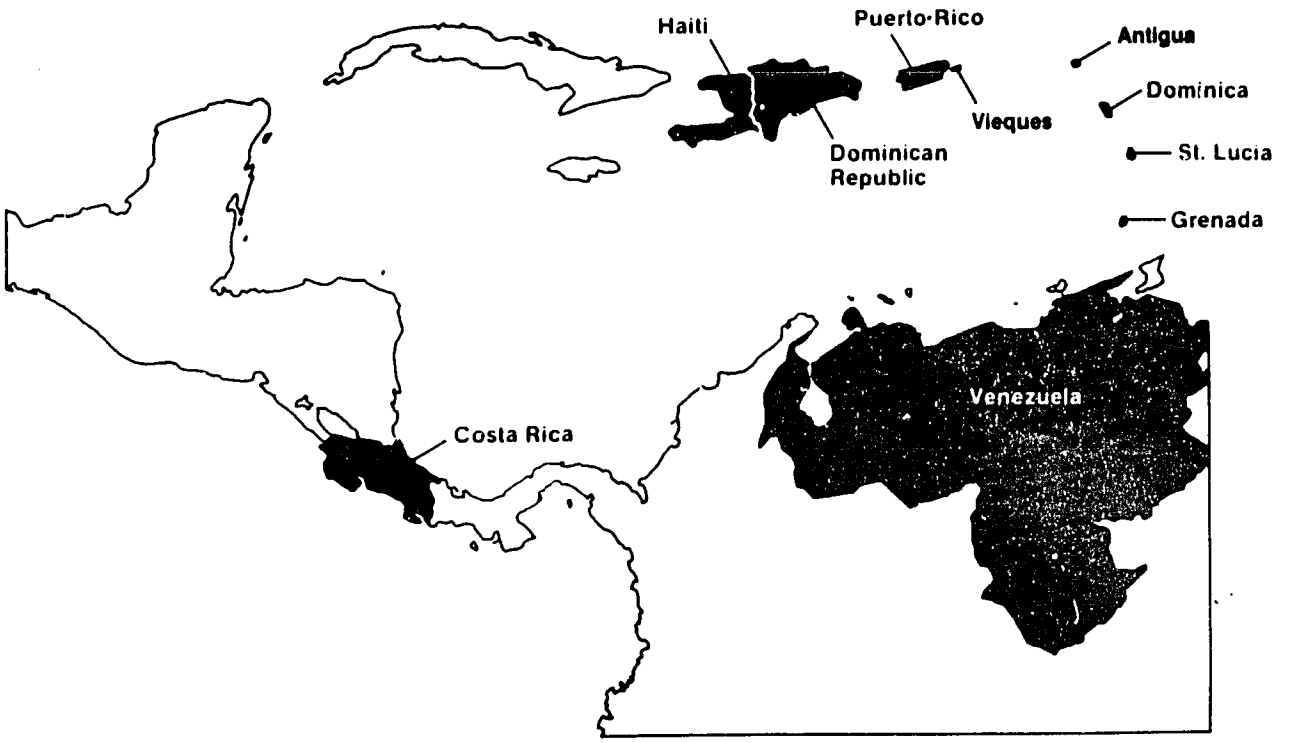

Fig. 1 Map of the spread of <u>Thiara granifera</u> in the Caribbean.

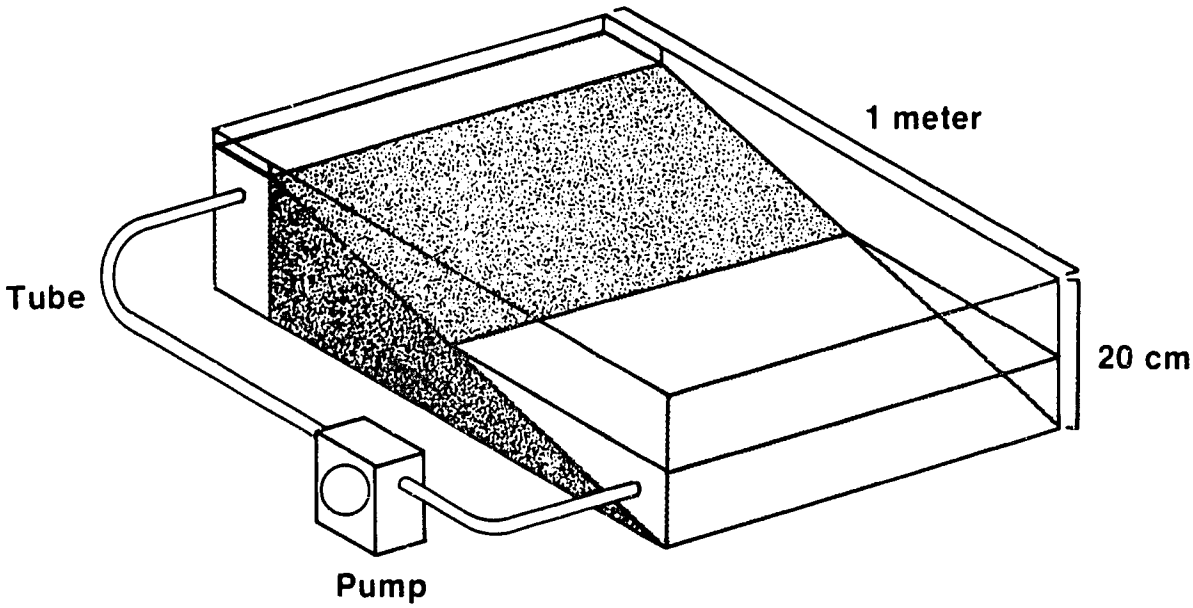

Fig. 2 Set up of the tank for laboratory maintenance of *Thiara granifera*.

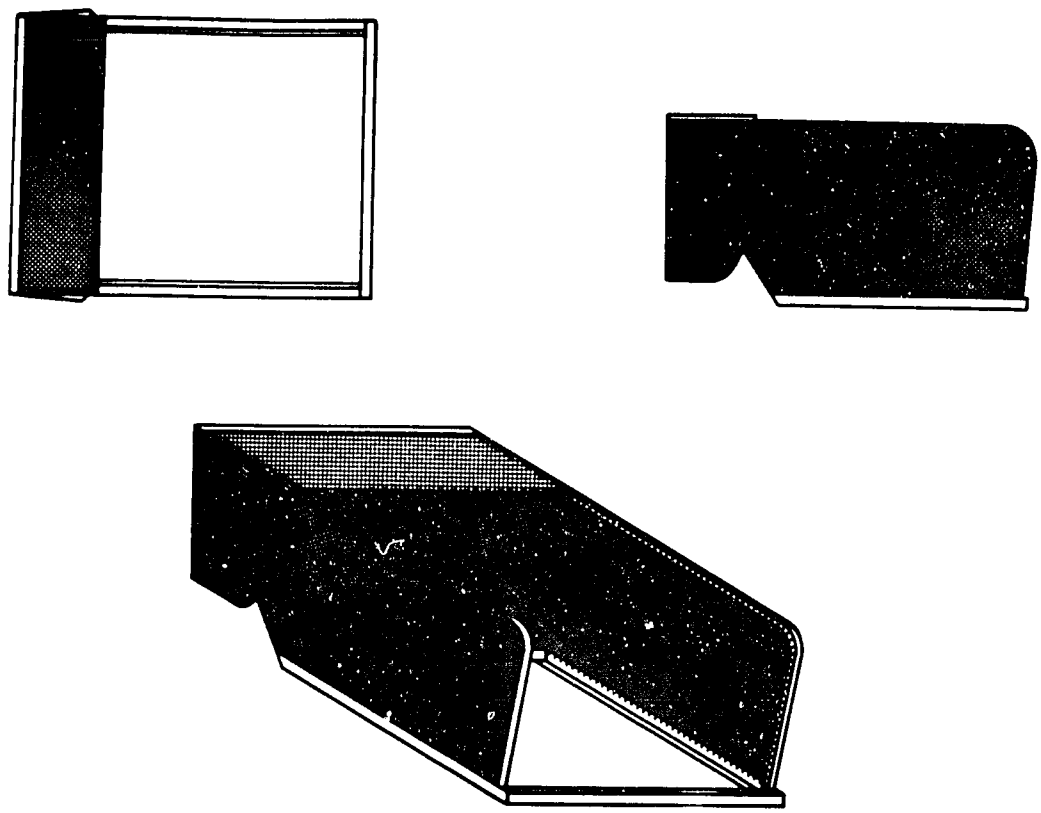

Fig. 3 Bottom sampling device used to collect *Thiara granifera*. The open square is 30 cm. on a side.