PN-ABJ-622
74074

PROCEEDINGS OF THE INTERNATIONAL SYMPOSIUM ON RED SOILS

Edited by

Institute of Soil Science, Academia Sinica

Science Press, Beijing, China
Elsevier, Amsterdam
1986

RED SOILS IN THE AMERICAS: MORPHOLOGY, CLASSIFICATION AND MANAGEMENT

S. W. Buol and P. A. Sanchez
(Soil Science Department,
North Carolina State University, USA)

INTRODUCTION

Well drained soils formed under humid, warm climates usually are relatively low in cation exchange capacity and content of exchangeable bases and have red or yellow colored subsoils. Historically, and in some present soil classification systems, they are known by many names (Table 1). None of these names fully define the soils classifying as Oxisols and Ultisols (Soil Survey Staff, 1975) but are the nearest approximations.

In Soil Taxonomy, most red soils of the Western Hemisphere are classified in the orders Ultisols and Oxisols. Ultisols cover about 118 million hectares in the United States (Soil Survey Staff, 1975) of which about 80 million hectares of Udults and Aquults occur in Southeastern United States. Ultisols are the dominant soil order in a region ranging from Washington, D.C. to northern Florida and from the Atlantic Seaboard to east Texas and Oklahoma (Buol, 1973). In tropical America, Ultisols cover 320 million hectares (Sanchez and Cochrane, 1980). Oxisols in the Americas are almost exclusively in the tropics, covering 512 million hectares, mainly in South America (Sanchez and Cochrane, 1980). The extent of Oxisols in the United States is limited to 128,000 hectares in Puerto Rico and Hawaii (Soil Survey Staff, 1975).

This paper will briefly review soil properties related to redness of soil color, describe and classify representative Ultisols of the Southeastern part of the United States, the Amazon Basin of Peru and Oxisols of the central plateau of Brazil, briefly consider their genesis, agronomic practices and soil management research.

USE AND RELATIONSHIPS OF RED COLOR TO CRITERIA IN SOIL TAXONOMY

Soil color has always been a very visible soil property and played a leading role in the nomenclature used to describe and classify soil. Red colors were commonly assumed to be the result of tropical weathering. However, Jenny 1941 (p. 145) stated "this assumption certainly is not justified in all cases, and the conclusion should be substantiated by further investigations."

Subsequent studies found few accessory characteristics that could be directly correlated. As stated in Soil Taxonomy (Soil Survey Staff, 1975: p. 9) "color *per se* seems to have no accessory characteristics." Thus, during the formulation of Soil Taxonomy soil color criteria gave way to criteria such as base saturation, clay content distribution in the profile, micromorphological features, soil moisture regimes and soil temperature regimes. In the higher categories of Soil Taxonomy, the only red color recognized is "Rhodic" (Greek base of

2

Table 1 General Table of Classification Terms for Soils Approximating the Properties Defined by Oxisols and Ultisols

System	Name Used
Marbut, 1921:	Red Soils; Yellow Soils; Laterite Soils, Lateritic Soils
Baldwin, *et al.*, 1938:	Yellow Podzolic; Red Podzolic (Terra Rossa); Yellowish-Brown Lateritic; Reddish-Brown Lateritic; Laterite
French, 1967[1/]:	Sols Ferrallítiques
USSR, 1967[2/]:	Podzolic Yellow Earth; Red Earths
Kubiena, 1953:	Latosols
ORSTOM, 1968[3/]:	Ferruginous Tropical Soils; Ferrallitic Soils
Australia, 1962[4/]:	Lateritic Podzolic Soils; Red Podzolic Soils; Yellow Podzolic Soils; Yellow Earths; Lateritic Krasnozems; Lateritic Red Earths; Red Podzolic; Yellow Podzolic
Brazil, 1966[5/]:	Soils with Latosolic B Horizons; Textural B with < 35% base saturation
FAO/UNESCO, 1970[5/]:	Ferralsols; Acrisols; Nitosols; Gleysols

[1/] Abstracted from Soil Survey Staff 1975. Soil Taxonomy. Agr. Handbook No. 436. p. 438-441.

[2/] Kubiena, W. L. 1953.

[3/] Aubert, G. 1968.

[4/] Stephans, C. G. 1962.

[5/] Beinroth, F. H. 1975.

3

rhodon, rose). Specifically, the "Rhodic" color requirements are that the argillic horizon has a color moist color value less than 4 that does not increase more than 1 unit of value when dry. Although no hue is required those argillic horizons that meet the value and chroma limitations are usually 5YR or redder in hue.

Redness is used to define Epiaquic subgroups in the Ultisols and Oxisols. Epiaquic subgroup criteria requires 10YR in yellower colors in some part of the upper 75 cm providing the color value is less than 5 and becomes redder by 2.5 or more Munsell units within 1.5 m of the surface. Epiaquic morphology is indicative of high rainfall and seasonal saturated conditions in the surface horizons not related to a regional water table.

At the series level of Soil Taxonomy color is a frequent taxonomic criteria. Many soil series in the Ultisol order are differentiated on the basis of having argillic horizons 5YR or redder from those series that are 7.5YR or more yellow. The results of several studies indicate that the more yellow the color the more frequently and/or the longer the duration of saturation. It has not been possible to obtain exact quantitative relationships between duration of saturation and redness or yellowness of color from one area to another. This is probably due to the relationships of iron oxidation and reduction to redox potential of the saturating water (Collins and Buol, 1970). Local variations in soil temperature, organic matter content and composition, and rate of water movement control the oxygen content and hence the redox potential of the soil water. The dynamics of these factors contribute to the poor relationships found between color and duration of saturation (Daniels et al., 1973).

The degree of redness has been shown to be related to the proportion of the iron that is present as hematite and goethite. There is little or no hematite in soil material with 7.5YR or 10YR colors. Colors of 5R indicate a dominance of hematite. There are indications that the same quantity of iron as goethite will have more surface area than as hematite thus tending to increase the phosphorus sorption per unit of iron in the more yellow colored soil materials. The significance of this observation has not yet been determined (Bigham et al., 1978).

From this brief review of the use of soil color and its meaning in terms of soil properties it is our opinion that the redness of soil color has been neglected in the higher categories of Soil Taxonomy because few other properties could be quantitatively related. Redness has remained an important criteria on a local scale because of its easy recognition by agronomists and engineers using soil survey reports. Perhaps as more quantitative studies are completed. redness of color may assume a more prominent place in the higher categories of Soil Taxonomy.

FORMATION OF OXISOLS AND ULTISOLS

No single factor or process of soil formation can be identified as responsible for the formation of all the Oxisols and Ultisols. A common factor is the presence of acid igneous rock either as residual parent material or as the origin of sediments in which the present profiles develop. However, transported materials from almost any rock can give rise to Oxisols and Ultisols and some Oxisols are formed on stable surfaces over ultra basic rock. Ultisols and Oxisols are formed in areas relatively free of calcareous dusts.

BEST AVAILABLE COPY

4

The Oxisols, by definition, must have a cation exchange capacity of less than 16 meq/100 g clay at pH 7 in the oxic horizon and contain only traces of weatherable minerals in the 0.02-2 mm fraction. These features are indicative of what is referred to as "highly weathered" in most pedologic terms. To explain the occurrence of Oxisols in terms of weathering it is necessary to conceive of weathering in a broader spacial context than the present soil profile.

The largest single area of Oxisols in the Americas is over the continental shields of South America. These areas are now covered by from one to several meters of pediment gravel, hillwash and stone lines. Erosional surfaces of several ages are associated within a single interfluve but all the material has attained an inert mineralogy consisting primarily of kaolinite, iron oxide and quartz. The minerals now present in a given profile are the result of many cycles of erosion and deposition. It is probable that a given sand grain now in an Oxisol profile may have been in several soil profiles during the courses of landscape evolution since Cambrian and Precambrian age. Within these Oxisols dominated shield areas it is only when underlying rock formations are exposed that weatherable minerals and more highly charged 2:1 clays are found in the profiles (Lepsch et al., 1977a; 1977b). Oxisols, with their complete profiles in the transported materials, dominate the more level surfaces. On the side slopes greater than about 5% there is a tendency to develop argillic horizons and coarser textured surface horizons associated with Ultisols. This frequently observed association of Oxisols on the level surfaces and Ultisols on the slopes has been attributed to alternating saturation-dessication cycles occurring on the side slopes and not on the level surfaces (Moniz and Buol, 1982). The coarser surface texture could result from either lessivage or preferential removal of fines by erosion. There is evidence that some 2:1 clays are formed on these side slopes during pedogenesis, slightly increasing the CEC values (Moniz et al., 1982).

The majority of the Ultisols in the Americas are developed either on residual acid igneous rocks of the Piedmont areas or on old coastal plain alluvium. Ultisols developed on residual areas often are dominated by kaolinitic clays and have CEC values as low as Oxisols within their argillic horizons. It has been found that feldspars alter to kaolinite, with brief intermediate steps in gibbsite and halloysite deep in the weathering rock under residual soils in humid areas (Calvert et al., 1980a, 1980b; Eswaran and Bin, 1978). Once formed kaolinite appears very stable in the soil zone. Alteration of feldspar to kaolinite is not the only mechanism to explain the high kaolinite concentration and low cation exchange capacity in Oxisols and Ultisols. Weathering, either in the profile or during transport of soil materials, results in the loss of silica and accumulation of iron if the system remains oxidized. Ultisols formed over residual rock normally have some weatherable minerals in their sand fractions while those formed in transported materials are likely to have few.

On the coastal plains both marine and fluvial sediments develop into Ultisols if the content of bases in the parent material is low or the stability of the surface great. A range of Paleudults present on the fluvial sediments of the Southeastern U.S. and the upper Amazon basin are remarkably similar. Both have very thick argillic horizons that look much like oxic horizons and frequently have CEC values as low as oxic horizons but are in profiles where the clay content increase is rapid enough with depth to qualify as argillic horizons. The sandier textured surface horizons of the temperate Ultisols are usually lighter in color and contain less organic matter than do the tropical counterparts but this difference appears to be of no significance for management.

The process of biocycling is not only a significant feature of pedogenesis in Oxisols and Ultisols but is extremely important in the understanding of management requirements in these soils. All Ultisols and many Oxisols are acid and contain few bases in the subsoil. Biocycling under native forest vegetation is responsible for the accumulation of nutrients in the surface horizon. Although individual results vary, Oxisols and Ultisols often have only about 10% of the Ca, Mg, and K involved in plant growth in the soil at any time while it is naturally vegetated (Weaver, 1975). Approximately 90% of the bases in the ecosystem are in the biomass of the vegetation or in the forest floor litter. Where fertilizer and manures are not used, or only used in limited quantity, shifting cultivation is the only farming system possible. In shifting cultivation, native vegetation is cut and burned to release bases via the ash. Farmers can plant rapidly growing food crops for a year or two to take advantage of the sudden recharge of soil fertility. Bases and other nutrients are removed with the harvest, some nutrients are lost via leaching and fixation and usually the farmer has to abandon after about 2 or 3 years. After abandonment secondary forest fallows are established and again accumulate available bases from the slow weathering of primary minerals, other slowly soluble forms or deposition processes.

It usually takes 15 to 20 years for these secondary fallows to accumulate enough nutrients to allow adequate fertilization upon cutting and burning. No system has yet been demonstrated that can obtain satisfactory and continuous yields of food crops on Ultisols and the acid Oxisols without importing nutrients. Annual or more frequent inputs of nutrients in the form of manures of fertilizer are necessary to maintain high levels of production either in the temperature or tropical zone. In the extreme of low fertility in these soils, as with the Cerrado vegetation native to the Acrustox and Haplustox of the Federal District of Brazil, the native vegetation is so sparse that even a first crop is not possible upon burning. Needless to say, areas of the world with these soils support only extremely low population densities unless adequate infrastructure is available to provide for fertilization and lime use. All the shifting cultivation cultures support only sparse populations and therefore offer potential sites for enlarging population with adaption of modern agricultural technologies.

CHARACTERISTICS OF THE ULTISOLS IN THE SOUTHEASTERN U.S. AND THE AMAZON BASIN OF PERU

There are many similarities between the soils in the upper Amazon basin in tropical South America and those in the Southeastern U.S. It is only in the fifth, or family, category of the hierarchial system of Soil Taxonomy that they are distinguished as different, because of different soil temperature regimes.

At the order level the soils are placed as Ultisols because they have a clay content increase of at least 20%, and most frequently considerably greater, between the A and the B horizon. Clearly they have argillic horizons although clay skins are commonly not present except deep in, or below, the argillic horizon. The Ultisols are acid in reaction and have a decrease in base saturation with depth. By definition the base saturation is less than 35% at a depth of 1.8 meters from the surface of 1.25 m below the top of the argillic horizon whichever is shallower (Soil Survey Staff, 1975).

Both areas have udic soil moisture regimes i.e., their subsoils are not dry more than 90 cumulative days per year in 6 or more years in 10 years. Average rainfall in the Amazon basin of Peru is 2000 mm/year and in the Southeastern U.S.

about 1150 mm/year. Poorly drained soils that classify as Aquults, indicating the occurrence of saturating conditions because of high water tables, are present in both areas. In Peru many of the poorly drained soils have higher base saturation in the subsoil and classify as Aqualfs (Tyler et al., 1978). This situation is not common in the Southeastern U.S.

The argillic horizons of the Udults discussed are thicker than most argillic horizons. They have a clay content distribution such that the content of clay does not decrease by more than 20% of its maximum within 1.5 m of the soil surface. This condition was considered to be present in soils of greater age and development than modal Udults thus they are known as Paleudults, or old Ultisols, at the great group level. Although some of the soils in the U.S. have plinthite, Plinthic subgroups, or thick sandy surfaces, Arenic subgroups, most are Typic Paleudults.

At the family category all soils in the Southeastern U.S. differ from those in Eastern Peru. In the soil family three criteria are considered. First is the texture of the control section which in Typic Paleudults is the upper 50 cm of the argillic horizon. The Peruvian soils discussed and most of the work in the U.S. is from fine-loamy (18-35% clay) families. Coarser or finer textured families occur in both areas. The second family criteria is mineralogy. For fine-loamy families the mineral composition of the 0.02 to 2 mm particles is considered. The major soils discussed both in Peru and the U.S. are in the siliceous families because they contain less than 10% weatherable minerals in the particle size range considered. The final family criteria is where the soils differ. The soils of the Southeastern U.S. have thermic soil temperature regimes and the soils in the Amazon basin of Peru have isohyperthermic soil temperature regimes. The thermic soil temperature regime is defined as mean annual soil temperature between 15° and 22°C and having the summer three months mean more than 5°C warmer than the winter three months mean. In the Amazon basin the soils have mean temperatures above 22°C and the mean temperature of the three warmest months does not differ more than 5°C from the mean temperature of the three coldest months. Profile characterization data from representative pedons in the two areas are presented in Table 2.

CHARACTERISTICS OF THE OXISOLS IN CENTRAL BRAZIL

Oxisols are defined as soils with CEC/100 g clay values less than 16 meq at pH 7. They do not have argillic horizons and must contain more than 15% clay. Oxisols are divided at the suborder level by moisture regimes and those on which the most of the following data was developed are Ustox. Ustox are Oxisols that have at least a 90 day dry period each year but are not dry as long as 270 days per year. The Federal District of Brazil, where most of the data have been developed has between 1500 and 2000 mm of precipitation per year and a mean annual air temperature of about 20°C (EMBRAPA, 1978). The great groups represented are the Haplustox and Acrustox. Haplustox have less than 35% base saturation at pH 7 in the oxic horizon and do not have a Sombric horizon. Acrustox have a cation retention from NH_4Cl of less than 1.5 meq/100 g clay in some part of the Oxic horizon and do not have a Sombric horizon. Typic subgroups in each great group lack plinthite (Plinthic subgroups) or blocky structure in the oxic horizons (Ultic and Tropeptic subgroups, respectively). At the family level the profiles are clayey i.e. >35% clay, kaolinitic i.e. dominated by kaolinite clay, and isothermic i.e. 15-22°C mean annual soil temperature and less than 5°C temperature difference between the mean soil temperature of the 3 coldest months and the 3 warmest months (Table 3).

7

Table 2 Profile Characteristics of Representative Ultisols in Southeastern U.S. and Eastern Peru

Horizon	Depth	Color	Sand	Silt	Clay	C	Free Fe	pH	Ca	Mg	K	Exch. Acidity	KCl-Ext. Al	Base Sat.
	cm		%					1:1	me/100 g					%
Typic Paleudult: fine-loamy, siliceous, thermic: Norfolk Series (565 NC 82-1)														
Ap	0-25	10YR3/2	75	17	8	.78	.3	4.8	1.09	.2	.2	5.0	.9	22
B21t	25-53	10YR5/4	61	19	20	.19	1.0	4.8	.60	.2	.1	5.0	1.7	16
B22t	53-86	10YR5/4	59	16	25	.07	1.5	4.9	.36	.2	.04	5.5	1.9	10
B23t	86-117	10YR6/6	60	14	26	.04	2.0	4.9	.05	.1	.03	5.0	1.8	5
B31	117-173	10YR6/6	65	12	23	.02	2.0	4.7	.04	.1	.02	4.0	1.6	5
B32	173-244	10YR6/6	75	7	18	.02	1.9	4.6	.03	.1	.02	3.3	1.5	6
C	244-287	10YR5/8	81	4	15	.02	.6	4.5	.02	.1	.02	2.4	1.4	6
Typic Paleudult: fine-loamy, siliceous, isohyperthermic: Yurimaguas Series (Tyler, 1975)														
A1	0-5	7.5YR4/4	80	13	6	1.3	.2	3.8	.84	.37	.20	14.9	1.2	9
E	5-13	10YR4/3	70	20	10	.8	.4	3.7	.05	.03	.04	10.5	2.1	1
B1	13-43	10YR4/4	61	24	15	.4	.6	3.9	.05	.03	.03	9.6	2.8	1
B21	43-77	10YR4/4	57	26	17	.3	.6	4.0	.03	.02	.02	10.8	2.7	1
B22	77-140	5YR5/8	51	24	25	.2	1.0	4.1	.03	.01	.03	12.5	4.2	1
B3	140-200	5YR5/8	54	22	24	.2	.8	4.4	.06	.03	-	10.0	3.5	1

Table 3 Profile Characteristics of Representative Oxisol Profiles in the Federal District of Brazil (EMBRAPA, 1978)

Horizon	Depth	Color	Sand	Silt	Clay	C	pH	pH	Ca+Mg	K	Exch. Acidity	Exch. Al	Base Sat.
	cm		----------	%	----------		1:1	KCl	---------	meq/100 g	------		%
Typic Haplustox: Claye, Kaolinitic, Isothermic (Dark Red Latosol)													
Ap	0-10	10R3/4	36	19	45	1.8	4.9	4.2	.4	.10	9.7	1.9	5
A3	10-35	10R3/6	33	19	48	1.2	4.8	4.3	.2	.05	7.8	2.0	4
B1	35-70	10Rs/6	35	18	47	.9	4.9	4.2	.2	.03	6.8	1.6	4
B21	70-150	10R3.5/6	35	18	47	.7	5.0	4.2	.2	.01	5.9	1.5	3
B22	150-260	10R4/6	39	19	42	.3	4.6	4.4	.2	.02	3.4	0.7	6
Typic Acrustox: Clayey, Kaolinitic, Isothermic (Red-Yellow Latosol)													
A1	0-15	5YR3/3	2	10	88	2.5	5.1	4.1	.4	.10	9.5	1.1	5
A3	15-35	5YR4/4	2	8	90	1.8	5.3	4.3	.2	.06	5.8	0.5	5
B1	35-50	5YR4/6	2	10	88	1.2	5.5	4.8	.2	.02	4.9	0.1	5
B21	50-120	5YR5/8	2	6	92	.9	5.6	5.2	.2	.01	2.6	-	7
B22	120-240	5YR5/8	2	8	90	.7	5.7	5.6	.2	.01	2.0	-	9
B23	240-300	5YR6/8	2	8	90	.5	5.8	5.8	.1	.01	1.6	-	6

MANAGEMENT OF ULTISOLS IN THE U.S.

Ultisols were some of the first soils encountered when immigrants arrived from Europe in the 1600s and 1700s. Little is recorded of their early experience or the earlier experiences of the native Indians. Most certainly the practices were very parallel to those of shifting cultivation practiced today in the Amazon Basin. In 1822 Professor Mitchell, in an address to the North Carolina Agricultural Society, described the farming practices in that Ultisol dominated area of the U.S. as follows:

"The first settlers, therefore, had nothing to do but to select the most promising spots, clear away the timber, and loosen the soil, so that the vegetables to be grown could strike their roots into it. As the fertility which they had at first found was, in the course of a few years, exhausted, it became necessary, either to provide the means of renewing it, or disforest another tract and bring it under cultivation. As it was found that the latter could be done at the least expense of time and labor, it was perfectly natural that the exhausted land should be thrown out, and fresh ground brought under tillage. This process has been going on till most of the tracts whose situation and soil were most favorable to agriculture, have been converted into old fields, and in our search for fresh ground to open we are driven to such inferior ridge land as our ancestors would have passed by as not worth cultivating." ...."But, in the process of time, as this system goes on, the planter will look down from the barren ridges he is tilling, upon the grounds from which his fathers reaped their harvest, but which are now desolate and abandoned, and inquire whether he cannot restore to them their ancient fertility, at a less expense than he can cultivate those lands of an inferior quality, with which he is now engaged."

In the 150 years since Professor Mitchell made his observations the Ultisols of the Southeastern U.S. have continued to serve agriculture but only through expert management of lime and fertilizer. Average fertilizer rates presently recommended are presented in Table 4. Most farmers sample and have chemical analyses or "soil tests" made on each individual field to determine their fertilizer and lime needs every year are once every two years. This is necessary because of significant differences among Ultisols in their tendencies to fix P, and to leach K. Finer textured soils tend to fix more P while sandy textures allow for more rapid K leaching. Also, different crops have different soil fertility requirements. Adjustments in pH by lime use are made about every 2-3 years, again based upon soil test results. Nitrogen is provided non-legume crops both at planting and again once or twice during the growing season.

Farming Typic Paleudult, fine-loamy, siliceous thermic soils (Table 1) on 0-2% slope farmers average 1,800 kg ha^{-1} of soybeans, 4,480 kg ha^{-1} of peanuts, 4,000 kg ha^{-1} of wheat, 6,900 kg ha^{-1} for corn, 3,360 kg ha^{-1} leaf tobacco, and 784 kg ha^{-1} cotton per year. Continuous agriculture has been practiced in these Ultisols for at least 150 years with adequate fertilization and liming resulting in marked chemical improvements not only in the topsoil but also in the subsoils (Figure 1).

Table 4 Fertilizer Suggestions for Field Crops (after Baird et al. 1979)

Crop	Optimum pH	At Planting N	At Planting P	At Planting K	Sidedressing N
		kg ha^{-1}			
Corn (grain)	5.8-6.2	22	20	88	155-200
Corn (silage)	5.8-6.2	22	29	132	180-225
Cotton	6.0-6.5	22	29	132	78-95
Soybeans	5.8-6.2	0	20	88	---
Wheat	5.8-6.2	22	10	44	66-88
Tobacco	5.5-6.0	40	20	110	22
Peanuts[1/]	5.6-6.1	0	0	50	0

[1/] 660 kg ha^{-1} $CaSO_4$; 0.5 kg ha^{-1} B:

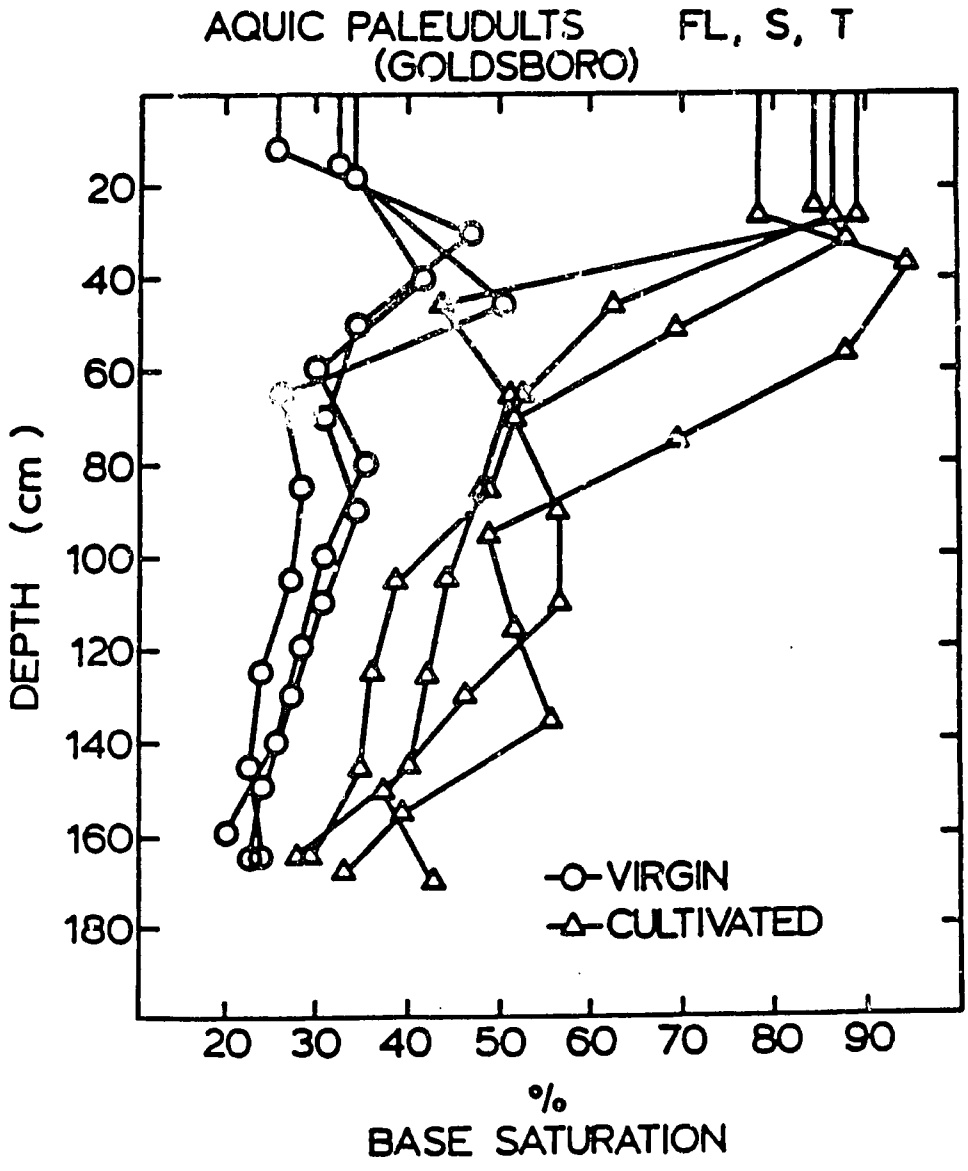

Figure 1 Base Saturation in Three Virgin Paleudult Profiles and Four Profiles Cultivated, Limed and Fertilized for Many Years in North Carolina, U.S.A.

MANAGEMENT OF ULTISOLS IN THE AMAZON BASIN OF PERU

The principal limitations of soils of the Amazon Basin are shown in Table 5, and clearly suggest that they are chemical rather than physical. Results from 12 years of research at Yurimaguas, Peru, on a soil described in Table 2 indicate that there are several management alternatives for soil/landscape combinations. For flat to gently rolling Ultisols, intensive continuous crop production, low input cropping systems, or legume-based pastures, are possible. The choice is likely to depend mainly on market accessibility, infrastructure and socio-economic conditions. For Ultisol areas with rolling topography (8-30% slopes) where a decision has been made to clear the forest, legume-based pastures and tree-based systems appear most promising. For poorly drained areas not subject to flooding along the river, irrigated paddy rice production is an alternative.

Productivity estimates, using 3 crops per year in the isohyperthermic families are 6,000 to 8,000 kg ha^{-1} yr^{-1} with intensively managed rice-corn-soybean-peanut annual rotations; 3,000 to 5,000 kg ha^{-1} yr^{-1} with low input crop production systems based on rice-cowpea rotations; 200-700 kg ha^{-1} yr^{-1} of liveweight gains with grass/legume pastures under rotational grazing in Ultisols, and approximately 15,000 kg ha^{-1} yr^{-1} of rice with 2.5 crops of irrigated paddy rice in the alluvial areas.

Intensive Cropping Systems Research in the Amazon of Peru

After identifying the desirability of traditional slash-and-burn land clearing (Seubert et al., 1977; Alegre et al., 1982) research focused on determining the most appropriate crops and crop rotations, fertilization needs, and to monitor changes in soil properties with cultivation. Several basic food crops have been studied, including upland rice, corn, cassava, plantains, soybeans, peanuts, sweet potatoes, cowpeas, and winged beans, either as monocultures or in combinations (Valverde and Bandy, 1982). The most promising results have been obtained by growing three crops a year as upland rice-corn-soybeans or upland rice-peanuts-soybean rotations. These rotations are adapted to the rainfall pattern and keep the ground covered most of the year. Continuous monoculture of the same crops, however, did not produce sustained yields because of pathogen build-ups (Valverde and Bandy, 1982).

Twenty-five consecutive crops have been harvested from the same field since it was cleared by slash-and-burn in October 1972 and cultivated to the rice-corn-soybean rotation. Without fertilization, yields dropped to zero after the third consecutive crop. With complete fertilization, the long-term average of this rotation, which was replicated in three fields was 7,800 kg of grain per hectare per year (Sanchez et al., 1982).

Figure 2 shows the long-term pattern with 88 harvests of these four crops with and without adequate fertilization during the past 8 years. Upland rice, soybean, and peanut yields are excellent; corn yields are moderate. Figure 2 also indicates a reasonable yield stability for the four crops. These results show that continuous production can be achieved on isohyperthermic families of Typic Paleudults with adequate fertilization.

The term "adequate fertilization" was not arrived at lightly. It took about four years to gather conclusive data on the changes in soil properties that

Table 5 Principal Limitations of Soils in the Amazon Basin Under Native Vegetation

Soil Constraint*	Million Hectares	Percentage of Amazon Basin
Phosphorus deficiency	436	90
Aluminum toxicity	357	73
Low potassium reserves	271	56
Poor drainage, flooding	116	24
High phosphorus fixation	77	16
Low cation exchange capacity	71	15
High erodibility	39	8
No major limitations	32	6
Steep slopes (> 30%)	30	6
Laterite formation if subsoil exposed	21	4
Shallow (< 50 cm. deep)	3	

*Nitrogen, sulfur, magnesium, and zinc deficiencies and temporary drought stress are widespread, but cannot be quantified with available data.

Source: Cochrane and Sanchez (1982).

25 BEST AVAILABLE COPY

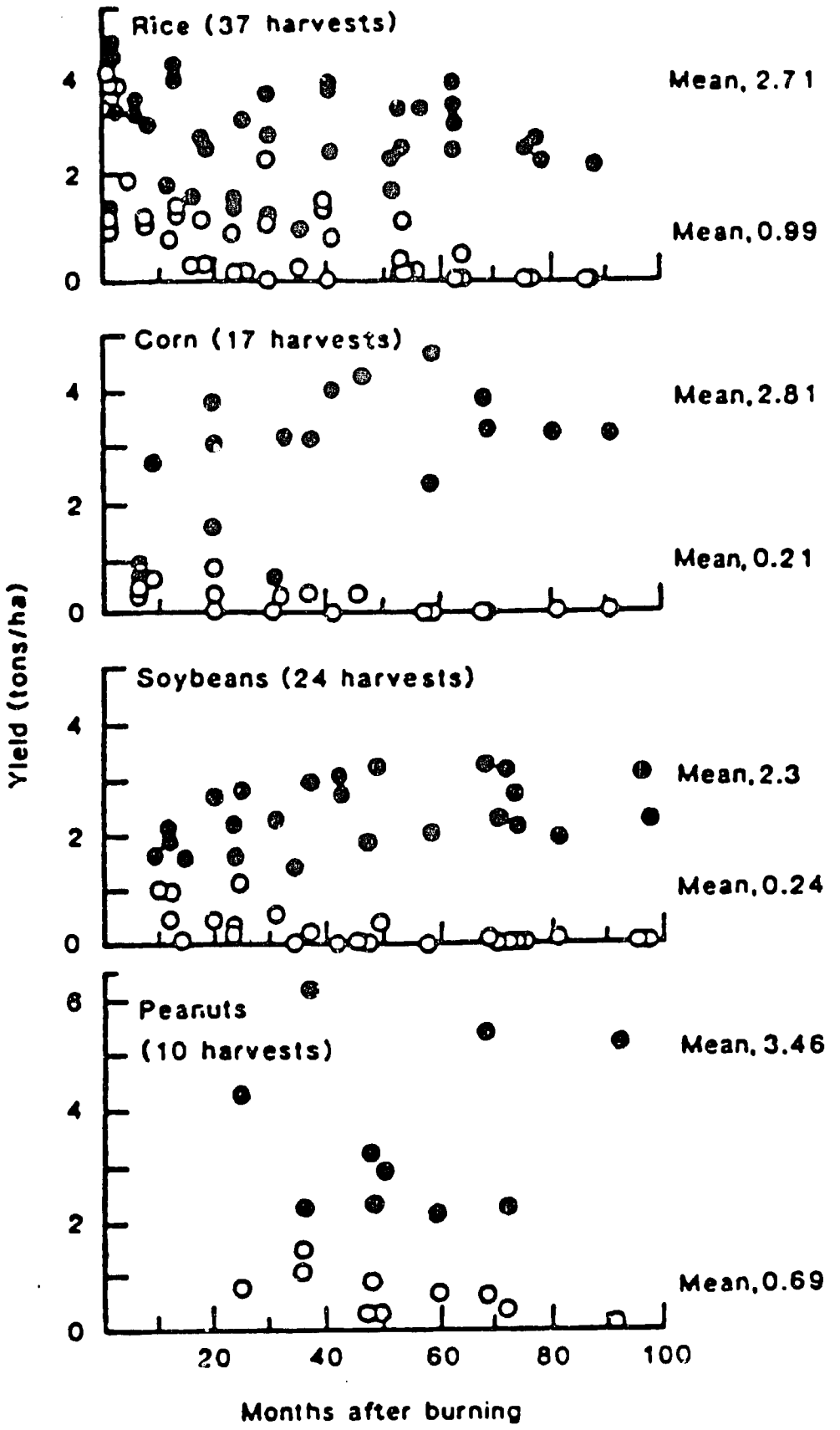

Figure 2 Crop Yields at Yurimaguas, Peru (1972 to 1980) With Complete Fertilization (●) and with no Fertilization (O).

14

occurred after clearing and burning a 17-year-old secondary forest and growing annual crops continuously. The nutrient dynamics have been monitored after each harvest since October 1972 and provided the key to continuous cultivation (Sanchez et al., 1982).

Table 6 presents lime and fertilizer recommendations developed during 10 years of research at Yurimaguas, Peru. Like all sound fertilizer recommendations, they are site-specific, nevertheless, they are representative of the level of fertilizer input required for continuous crop production in Ultisols. These fertilizer levels do not differ substantially from those used to grow corn, soybeans, and peanuts in Ultisols of the southeastern United States (Table 4). On-farm trials around Yurimaguas show that the system is economically viable under a wide range of crop and fertilizer prices, levels of capital and labor force composition (Hernandez and Coutu, 1981).

Although it is commonly believed that cultivation degrades soils in the humid tropics, our results indicate that soil properties improve with continuous cultivation systems that combine intensive management with appropriate fertilization. After 20 consecutive crop harvests at Yurimaguas, the topsoil pH increased from a very acid 4.0 before clearing to a favorable level of 5.7 (Table 7). Organic matter content decreased by 27 percent, but most of this loss occurred during the first year. Exchangeable aluminum decreased from very high levels to minimal amounts; exchangeable calcium increased 20-fold (a consequence of lime applications), and exchangeable magnesium doubled. Exchangeable potassium did not increase despite the application of large quantities of potassium fertilizer, suggesting rapid utilization by crops and perhaps losses due to leaching. Effective CEC doubled as a consequence of the pH-dependent charge of kaolinite, organic matter and iron oxides. Fertilization also increased available phosphorus from below the critical level of 15 ppm (Olsen method) to substantially above it. The same trend occurred with zinc and copper. Available manganese, however, decreased to levels approaching deficiency. Available iron remained considerably above the critical range of 20 to 40 ppm. On the whole, these changes indicate improvement in the topsoil's chemical properties.

There have been no unfavorable changes in the soil's physical properties thus far because of the protection three well-fertilized crops per year provide against the rains (Table 8). Although crop residues are left in the field until the experimental plots are tilled for the next planting, the soil is exposed for up to 30 days before a full crop canopy is reestablished. Occasional runoff losses have been observed, but they have not been of sufficient magnitude to affect yields.

Acid, infertile subsoils of Oxisols and Ultisols frequently act as chemical barriers to root development. Crop roots are unable to enter a subsoil highly saturated with aluminum ions and very low in exchangeable calcium (NCSU, 1980; Ritchey et al., 1980). This produces shallow root systems, which often results in drought stress during rainless periods (the subsoil may still have plenty of water, but the plants cannot reach it). With time, however, fertilization and continuous cultivation leads to an alleviation of this problem. Significant increases in calcium, magnesium, and effective CEC and a decrease in aluminum saturation have taken place 15 to 45 centimeters below the surface (Figure 3). All these properties indicate a more favorable environment for root development than before clearing and follow the same trend observed after a much longer period of fertlization in temperate Ultisols (Figure 1).

Table 6 Fertilizer Requirements for Continuous Cultivation of Annual Rotations of Rice, Corn, and Soybeans or Rice, Peanuts, and Soybeans on an Acid Ultisol in Eastern Peru

Input*	Rate Per Ha	Frequency
Lime	3 tons	Once every 3 years
Nitrogen	80 to 100 kilograms N	Rice and corn only
Phosphorus	25 kilograms P	Every crop
Potassium	80 to 100 kilograms K	Every crop, split application
Magnesium	18 kilograms Mg	Every crop (unless dolomitic lime is used
Copper	1 kilogram Cu	Once a year or once every 2 years
Zinc	1 kilogram Zn	Once a year or once every 2 years
Boron	1 kilogram B	Once a year
Molybdenum	20 g Mo	Mixed with legume seeds only

*Calcium and sulfur requirements are satisfied by lime, simple superphosphate, and magnesium, copper and zinc carriers.

Table 7 Changes in Topsoil (0 to 15 cm) Properties in a Typic Paleudult in Eastern Peru after 8 Years of Continuous Cultivation and 20 Crops of Upland Rice, Corn, and Soybeans with Complete Fertilization

Time	pH	Organic Matter (%)	Exchangeable (meq/100 cc)					Al saturation (%)	Available (parts per million)				
			Al	Ca	Mg	K	ECEC		P	Zn	Cu	Mn	Fe
Before clearing	4.0	2.13	2.27	0.26	0.15	0.10	2.78	82	5	1.5*	0.9*	5.3*	650*
Ninety-four months after clearing	5.7	1.55	0.06	4.98	0.35	0.11	5.51	1	39	3.5	5.2	1.5	389

*Thirty months after clearing

17

Table 8 Effects of Completely Fertilized Continuous Cropping on Selected Soil Physical Properties

Years after cropping	Infiltration Rate	Bulk density (15 cm)
	(cm/hr)	(g/cc)
0 (1 month after clearing)	10.6	---
1 year	9.6	1.51
4 years	12.7	1.44
6 years	10.0	1.55

Adapted form Seubert et al. 1977; NCSU 1980

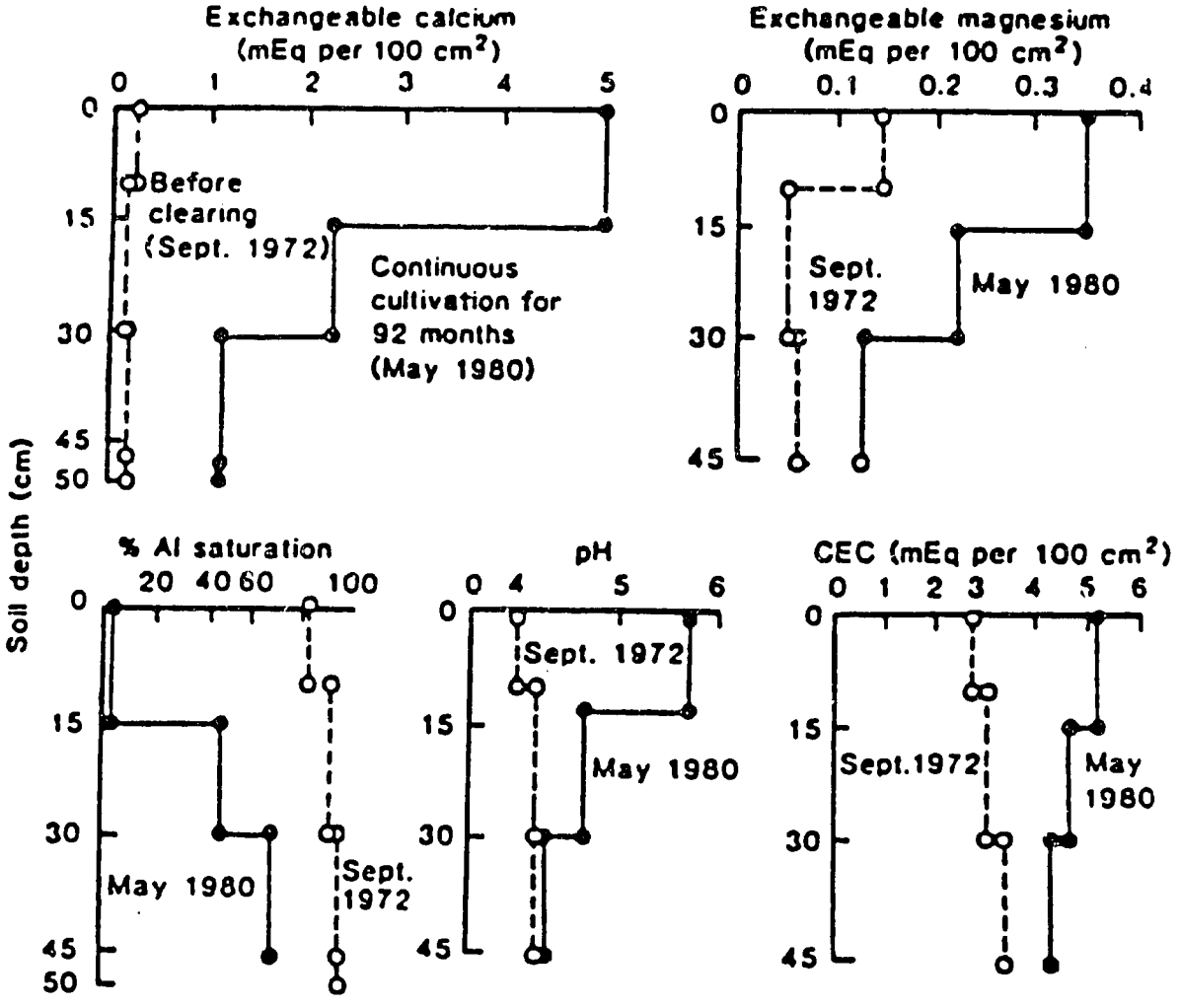

Figure 3 Changes in Soil Properties Under Continuous Cultivation with Lime and Fertilizer in a Paleudult near Yurimaguas, Peru from 1972 to 1980.

18

Attempting continuous cultivation without adequate fertilization, however, did result in soil degradation. The lack of a full crop canopy left the soil exposed for most of the year. Fertility was so limiting that even weed growth was surpressed. Although not measured, runoff losses from these plots must be considerable as the soil surface appears more sandy and is highly compacted.

Low-Input Cropping System Research

Intensive, fertilizer-based continuous cropping is limited to areas with relatively good access to inputs and markets. Ultsol and Oxisol areas in the tropics often have little infrastructure. A second research thrust was initiated several years ago to develop soil management alternatives that would minimize chemical input use (Sanchez and Salinas, 1981). This thrust is based on three main strategies, the use of crop varieties tolerant to acid soil stresses, organic sources of fertilizer, and the use of managed fallows as an intermediate alternative between continuous and shifting cultivation.

Germplasm collected from various institutions believed to have high yield potential under humid tropical conditions were tested in limed and not-limed plots in Yurimaguas, Peru with aluminum saturation levels of about 20 and 80%, respectively. Germplasm was considered highly tolerant of soil acidity of yields were 85% or more of those obtained in the limed plots, and moderately tolerant if the relative yields were between 65 and 85%. The overall results, shown in Table 9, indicate a high degree of acid tolerance in upland rice and cowpeas, an absence of acid tolerance in the corn, soybean and winged-bean germplasm tested and moderate tolerance in peanuts and sweet potatoes. Some local peanut cultivars appear highly aluminum tolerant in growth vigor, but not in yields. In addition to the goal of eliminating lime as an amendment, research on minimum tillage, crop residue management and weed control methods is being carried out. The highly reactive Bayovar rock phosphate plus moderate amounts of nitrogen, potassium and some micronutrients are being applied low input continuous cropping systems. The first year results of the upland rice-cowpea rotation have produced excellent yields, 3,500 kg ha^{-1} of rice and 1,800 kg ha^{-1} of cowpeas, without lime on a soil with a pH of 4.2 and 70% aluminum saturation (Piha and Gichuru, unpublished data).

Another approach to reduce chemical input use is to apply nutrients as organic forms. Research has concentrated on the use of mulches, green manures and compost. Mulching with Panicum maximum has provided inconsistent results (Valverde and Bandy, 1982). Mulching is almost always detrimental to upland rice yields because plants remain greener into maturity and are thus subject to more fungal attacks. Mulching is especially advantageous to corn when severe drought stress occurs. Since corn is planted during the drier part of the year, it is subjected to more drought stress than rice. No advantages of mulching were found for soybean, peanuts or cowpeas.

The use of kudzu (Pueraria phaseoloides) as a green manure produced highly favorable results. Wade and Sanchez (1983) report that about 90% of the yields obtained with full chemical fertilization were obtained with kudzu green manures without any inorganic fertilization. Unfortunately, the high labor cost involved in collecting, transporting and incorporating kudzu severely limits the applicability of this practice.

Table 9 Summary of Varietal Testing for Acid Tolerance at Yurimaguas, Peru (1980-1982)

Species	Accessions tested	Very tolerant* (RY>85%)	Tolerant (RY=65-85%)	Sensitive (RY<65%)
Rice	32	8	16	8
Cowpeas	30	22	7	11
Soybeans	22	0	0	22
Corn	20	0	0	20
Winged beans	16	0	0	16
Sweet potato	10	0	2	8
Peanuts	10	0	1	9

*Tolerance based on relative yield RY = $\frac{\text{Yields at 80\% Al satn.}}{\text{Yields at 20\% Al satn.}}$

Table 10 Effect of Compost Applications on Crop Yields Relative to Those Obtained with Complete Fertilization. Yurimaguas, Peru 1977-1981.

Crop No.	Compost: Corn Stover	Compost: Kudzu
	% max. yield	
NO FERTILIZERS ADDED:		
1	99	90
2	90	108
3	68	70
4	94	84
5	35	52
6	46	20
100 kg K/ha ADDED:		
7	65	93
8	64	83
9	90	85
10	60	78
11	108	92
12	147	133

A third alternative has been to make compost of crop residues or kudzu in open pits and apply it to plots. During the first few harvests yields approximated 80% of completely fertilized plots but they gradually decreased as potassium was leached from the compost (Bandy and Nicholaides, 1982). With an application of 100 kg ha^{-1}, of fertilizer K yields with compost have again approximated those obtained by inorganic fertilization (Table 10).

Another low-input alternative is the use of one to three years of kudzu fallow after one year of cropping. Alternating one year of cropping with one year of kudzu fallow have produced respectable yields, while providing total soil protection during the fallow period. Crop yields, however, are declining with time (Table 11) and seem to be related to potassium deficiency.

Kadzu fallows have not effectively obtained nutrients from the subsoil in these very acid and infertile subsoils (Bandy and Sanchez, 1981). In contrast to other areas with higher base status subsoils no significant nutrient recycling occurred. Nevertheless, cutting and burning two to three years growth of kudzu fallow produced similar crop yields as cutting and burning a 25-year old secondary forest fallow. Additional advantages of kudzu fallows include the maintenance of the residual effects of previous liming and fertilization, its grazing potential as a "protein-bank" combined with adjacent grass pastures. Also, kudzu fallows provide virtually total protection against erosion.

Legume - Based Pastures

Cattle grazing for beef and milk production is a very important and controversial activity in the Amazon (Toledo and Serrao, 1982). The majority of pastures in the Amazon show initially luxurious growth but gradually degrade because of the use of poorly adapted species, the absence of legumes, fertilization and poor grazing management which results in overgrazing and subsequent soil compaction and erosion.

Research in acid-tolerant grass and legumes ecotypes obtained from CIAT's Tropical Pastures Program began in 1979 in Yurimaguas in order to test the adaptability of this new germplasm to local conditions. CIAT regional trials were planted in one of the least fertile areas of the station, an Ultisol with pH values of 4.0 and 90% aluminum saturation in the A horizon. The only fertilization was 22kg P/ha as ordinary superphosphate. Three grasses (Andropogum gayanus, Brachiaria decumbens and Brachiaria humidicola) and five legumes (Desmodium ovalifolium 350, Centrosema hybrid 438, Stylosanthes guianensis 136, Desmodium heterophyllum 349 and Pueraria phaseoloides) showed excellent growth vigor and adaptation in small plots (Ara et al., 1981).

These species were combined in 0.45 ha grazing pressure plots, on land previously cropped at the Yurimaguas station. Unlike temperate region experience, the legumes established themselves quickly but the grasses suffered from poor establishment, partly because of excessive tillage and partly because of vigorous weed competition. During the first year, continuous grazing was used at an average stocking rate of 4 animals/ha. This resulted in modest liveweight gains and in some mixtures an excessively high proportion of legumes. Grazing management was changed to rotational grazing at 48-day intervals during the second year. Preliminary results shows relatively modest animal weight gains (300-500 g/animal/day) but because of the relatively high stocking rate, high annual liveweight gains per hectare. More time is needed to ascertain the persistence and

Table 11 Performance of Minimum Input System with Kudzu Fallow Rotation with No Lime or Fertilizer Addition

Year	Management	Corn Yields (1st crop after burn)	Rice Yields (2nd crop after burn)
		----------tons/ha----------	
1977	Burn 20 yr. old secondary treat., plant	4.0	3.3
1978	First kudzu fallow	---	---
1979	Burn kudzu, plant	1.1	1.7
1980	Second kudzu fallow	---	---
1981	Burn kudzu, plant	0.7	1.5

Table 12 Performance of Flooded IR4-2 Rice in Different Land Preparation Systems in an Aquept of Yurimaguas, Peru. August 81-April 82

Land Preparation	Planting System	First Crop	Second Crop	Total (9 months)
		Yields (ton/ha		
Puddled	Transplanted	7.9	5.2	13.1
+ flooded:	Broadcast*	3.2	4.9	8.1
Dryland	Transplanted	8.3	6.7	15.0
+ flooded:	Broadcast*	6.3	5.6	11.9
	Drilled**	5.2	5.4	10.6
	Planting stick**	7.0	5.6	12.6
Mean		6.3	5.6	11.9

*Pregerminated seeds

**Flooded at about 30 days after seedling

Source: Bandy et al., 1982

22

productivity of these grass-legume mixtures, as well as learning how to manage them in a rainforest environment. Nevertheless the productivity of 400 to 700 kg/ha/year of liveweight gains underscores a significant potential for legume-based pastures in the region.

On-farm trials on sloping, degraded Panicum maximum pastures near Yurimaguas indicate that a surface application of 22 kg P/ha as Bayovar rock phosphate totally regenerated these pastures (Schaus, unpublished). The use of this technique has been amply demonstrated on level phases of Oxisols in the lower Amazon Basin (Serrao et al., 1979).

Tree-Based Production Systems

Many scientists believe that trees should be the basis for production on Ultisols and Oxisols in tropical areas. Research is being initiated to combine crop production systems with promising tree species such as Gmelina arborea, and peach palm (Guilielma gasipaes). Research is in progress on Gmelina intercropped with crops and pastures, legume cover crops with peach palm and fertilization response of these two crops. Collections are also being made of potentially important Amazonian species including other native palms. Research in this direction is likely to be expanded in collaboration with the REDINAA perennial crops group (Alvim, 1982) and ICRAF. Tree-based production systems, although probably applicable to a wide array of landscape positions, are particularly attractive to sloping areas of Ultisols or Oxisols.

Paddy Rice in Alluvial Soils

Within the Ultisol dominated uplands are areas of somewhat poorly drained, high base status soils located in topographic positions that preclude annual flooding. The high native fertility of these Entisols, Inceptisols and Alfisols, and their proximity to rivers, presents the possibility of their intensive utilization for irrigated rice production. Table 12 shows the high yields achieved by different land preparation and planting methods during the first two crops during a nine-month period. Continuous rice production permits the harvesting of 2.5 crops of rice per year with a total production potential of about 15 tons/ha per year. No fertilizer response has been observed during the first two crops, but visual nitrogen response is now evident in the third crop. Fortunately a species of Azolla has spontaneously appeared in the paddies, and its management may contribute to decrease fertilizer inputs. Water management trails indicate the need of irrigation to obtain high rice yields. Rainfed rice production averaged 4.6 tons/ha while irrigated rice averaged 6.3 tons/ha (Bandy et al., 1982).

MANAGEMENT OF OXISOLS IN ACID SAVANNA REGIONS

Only about 5% of the Oxisol-Ultisol regions of tropical America is estimated to be under continuous agricultural production, in contrast with about 25% of tropical Asia (Buol and Sanchez, 1978; Sanchez, 1976). Within this vast area of acid infertile soils, the Savannas are being developed faster than the humid forested regions, partly because of better infrastructure. Farming systems found in this region range from shifting cultivation in the subhumid forested areas, to extensive cattle grazing, to crop-pasture systems and finally intensive crop

production. The geographic pattern of this intensification is largely a function of accessibility to markets and services.

Shifting cultivation is limited to the forested regions, including the gallery forests in the savannas. Extensive cattle grazing is the first step in using the savanna regions, because it can be done at low levels of inputs. Severe acid soil infertility coupled with drought stress results in low forage production both in quantity and quality. These physical constraints result in low cattle weight gains and require 5 to 20 hectares of native savanna to feed an animal unit. When market accessibility improves the use of purchased inputs increases, annual crops begin to emerge and compete with cattle raising for land. Upland rice, soybeans, sorghum and peanuts are planted for one to three years after which the land is transformed in some form of improved pasture, used primarily for beef production. When further market accessibility increases the value of that land, beef production loses its comparative advantage and farms gradually evolve into intensive crop production systems. Such a gradient can be seen as one moves south from northern Goias or Mato Grosso, through Brasilia, southern Goias, and further south to Sao Paulo State near the urban markets of Sao Paulo and Rio de Janeiro in Brazil.

Extensive Cattle Grazing in the Savannas

This is probably the most extensive farming system in the acid, Ustox, savannas, covering as many as 200 million hectares. Recent surveys of 31 ranches considered representative of the range found in the Llanos of Colombia and the Brazilian Cerrado show an average ranch size of 2550 hectares, an average stocking rate of 0.2 animal units/ha, a low calving rate of about 50%, and low animal liveweight gains of about 30 kg/ha per year (CIAT, 1979). Zebu or Criollo type breeds are the main ones used, because they are more tolerant to heat stress and many diseases capable of exterminating European cattle breeds. Lack of sufficient forage during the dry part of the year is widely accepted as the main limiting factor to increased production. However, normal micro variability in soil roperties insures that such large holdings contain several soil types. Farmers that have a significant proportion of poorly drained soils (Aquox) have the advantage of having some available pasture during the dry season and obtain above average production (Cochrane, 1979).

Many attempts have been made to establish productive grass-legume pastures but in most cases the legumes do not persist after the first or second year, primarily because of unsuitable species, disease attacks and nutrient deficiencies (Hutton, 1979). Attempts to introduce legumes that are well adapted to regions where soil acidity is not a problem commonly fail unless aluminum toxicity is eliminated by liming. It should be recognized that most of the soils where legume-based pastures are successful in tropical Australia are Alfisols with no acidity problems (Sanchez and Isbell, 1979).

A management strategy is being developed by CIAT's Tropical Pasture Program and collaborating institutions in Brazil, Bolivia, Colombia, Venezuela and other countries (CIAT, 1978, 1979; Sanchez and Tergas, 1979; Sanchez, 1982). The main components of this package are: 1) Systematic selection of appropriate soils. A computerized land resource inventory of the region has been developed (Cochrane, 1979; Cochrane et al., 1979). 2) Planting mixtures of locally adapted grass and legume cultivars tolerant to high levels of aluminum saturation and low levels of available phosphorus, major pest attacks, drought stress and burning (CIAT, 1978, 1979). 3) Supplying nitrogen to the system by inoculating legumes with acid-

24

tolerant Rhizobium strains (Date and Halliday, 1979: Halliday, 1979). 4) Using low cost, low reactivity rock phosphates which become more available when the soil is kept acid and aluminum-tolerant plants are grown (Fenster and Leon, 1979). 5) Correction of all other nutritional deficiencies, particularly potassium, sulfur and micronutrients through fertilization (EPAMIG, 1978; Hutton, 1979). 6) Reducing pasture establishment costs, where possible, by using low density planting methods or crops as precursors of pasture establishment (Spain, 1979; Kornelius et al., 1979: CIAT, 1979).

Preliminary results from liveweight gain trials and herd management trials at Carimagua, Colombia are very promising (CIAT, 1979). Mixed swards of the grass Andropogon gayanus with the legumes Zornia latifolia or Stylosanthes capitata with about 50 kg P_2O_5/ha and 24 kg K_2O/ha, 20 kg S/ha, 20 kg Mg/ha have increased annual liveweight gains to about 400 kg/ha and the stocking rate to 2 animal units per hectare (CIAT, 1980). Herds grazing 10% of the area in improved pastures increased cow-calf production by 2.5 times in comparison to identical herds grazing 100% native savanna.

The above description indicates that a technological breakthrough is in the making. But no technological package can be transferred directly to all farms across such enormous areas. In the case of pastures, the complications are greater than those encountered in the initial spread of high yielding rice varieties in Asia. The individual technology components, such as which grass and legume species to use, are very site-specific and so are the soil fertility problems, the incidence of disease and insect attacks (CIAT, 1980). Consequently, such technology components have to be carefully matched with soil properties and validated locally for a sufficiently long period of time before they can be transferred successfully.

Intensive Cropping Systems

Unlike the pasture systems, most crops are not sufficiently tolerant to acid soil constraints in order to produce high yields without lime and at the low fertilization levels found sufficient for pastures. The principal constraint to expanding cropping systems onto the Haplustox soils by economical means are: 1) Aluminum toxicity both in the topsoil and in the subsoil; 2) extreme phosphorus deficiency and high phosphorus fixation capacity in clayey textural topsoils; 3) deficiency of many other nutrients; and 4) severe water stress caused by temporary droughts during the rainy season and accentuated by subsoil aluminum toxicity which prevents root development into a moist subsoil.

Technology has been developed or adapted to overcome the problems by judicious input use for crops such as soybeans, corn, sorghum and peanuts. The main components of such technology are: 1) Decrease soil acidity by liming to neutralize the exchangeable aluminum in the topsoil, increasing the soil pH up to 5.5, and providing a residual effect for several years. Rates vary from 2 to 4 tons/ha (Gonzalez et al., 1975; North Carolina State University, 1976-1977). 2) Apply a combination of broadcast rock phosphate applications to increase root volume, and banded applications of superphosphate prior to each crop. This gradually builds up the phosphorus status of the soil (Lobato and Goedert, 1977; Yost et al., 1979). The basal or "corrective" applications are on the order of 165 to 175 kg P/ha and the banded applications between 13 and 35 kg P/ha. 3) Identify, via soil fertility evaluation services the critical levels for potassium, sulfur,

magnesium, zinc and other elements and apply the necessary amounts (Lopes and Cox, 1977; EPAMIG, 1978; Ritchey, 1979; Buol and Nicholaides, 1980, Lopes, 1980). 4) Decrease the devastating effects of drought stress during peak periods of growth by deep lime application or the use of aluminum-tolerant cultivars which are capable of exploring a deeper soil volume (Gonzalez et al., 1976; Salinas, 1978). Whenever cheap gravity irrigation systems are possible, a second annual crop, irrigated wheat, can be grown during the dry season on Ustox soils.

The use of some of these components has permitted a very rapid development of intensive crop production in the Cerrado of Brazil, particularly in areas with topography most favorable to mechanization. The increase in area cultivated to annual crops in the acid savannas during the last 10 years is estimated to be on the order of 5 million hectares, mainly of Haplustox and Acrustox soils in Central Brazil (Sanchez and Cochrane, 1980).

SUMMARY

Although there are differences among the Ultisol and Oxisol areas of the Americas the present agronomic use in even more contrasting. Comparison of farming systems, which are determined not only by soil properties but by social, economic and political systems, often give a false impression of a soil's performance or even potential for supporting agriculture. However, contrasting present land use may appear soils determined to be similar in chemical and physical properties have been found to respond similarily to specific technological practices. The more quantitatively soils are grouped according to their measurable physical and chemical variables the more successful we are in extrapolating the results of soil management research within groups of soils. Technology designed to alter soil properties, and thereby make those properties more hospitable to a desired use, can be extrapolated only if the initial soil properties and interactions of practice and property are well understood. Farming methodology, the sum of many technologies, is often more dependent on non-soil constraints than soil constraints and thus will not immediately relate to soil properties.

REFERENCES

Alegre, J. C., D. K. Cassel, D. E. Bandy and P. A. Sanchez. Effect of land clearing on soil properties of an Ultisol and subsequent crop production in Yurimaguas, Peru. (Presented at Yurimaguas Conference) 1982.

Ara, M. A., P. A. Sanchez, D. E. Bandy and J. M. Toledo. Adaptability of grass-legume pastures in the Amazon of Peru. Agronomy Abstracts 1981:83.

Alvim, P. T. An appraisal of perennial crops in the Amazon basin. In: S. B. Hecht (ed.) Amazonia: Agriculture and Land Use Research. CIAT, Cali, Colombia. pp. 311-328. 1982.

Aubert, G. Classification des sols utilisee par les pedologues Francais. In: World Soil Resources Rept. No. 32. FAO, Rome, Italy. pp. 78-94. 1968.

Baird, J. V., F. R. Cox, E. J. Kamprath, S. H. Hawks, E. L. Kimbrough and G. S. Miner. Fertilizer suggestions for field, pasture and hay crops. In: North Carolina Agric. Chemicals Manual. North Carolina State University, Raleigh, N.C. pp. 353-350. 1979.

Baldwin, M., C. E. Kellogg and J. Thorp. Soil classification. In: Soils and Men. USDA Yearbook of Agriculture. House Document No. 398, U.S. Govt. pp. 979-1001. 1938.

Bandy, D. E. and J. E. Nicholaides. Use of composts for crop production on Ultisols of the Amazon jungle. Agronomy Abstracts 1982: 1982.

Bandy, D. E. and P. A. Sanchez. Managed kudzu fallow as an alternative to shifting cultivation in the Yurimaguas, Peru. Agronomy Abstracts 1981:40. 1981.

Bandy, D. E., J. Benites and P. A. Sanchez. Irrigated rice potential of alluvial soils in the Amazon of Peru. Agronomy Abstracts 1982: 1982.

Beinroth, F. H. Relationship between U.S. soil taxonomy, the Brazilian soil classification system, and FAO/UNESCO soil units. In: E. Bornemisza and A. Alvarado (eds.) Soil Management in Tropical America. North Carolina State Univ., Raleigh, NC. pp. 92-108. 1975.

Bigham, J. M., D. C. Golden, S. W. Buol, S. B. Weed and L. H. Bowen. Iron oxide mineralogy of well-drained Ultisols and Oxisols. II. Influence on color, surface area, and phosphate retention. Soil Sci. Soc. Am. J. 42:825-830. 1978.

Buol, S. W. (ed.) Soils of the southern states and Puerto Rico. Southern Coop. Series Bull. No. 174. p. 105 map. 1973.

Buol, S. W. and J. J. Nicholaides, III. Constraints to soil fertility evaluation and extrapolation of research results. In: Priorities for Alleviating Soil-Related Constraints to Food Production in the Tropics. IRRI, Los Banos Laguma, Philippines. pp. 425-438. 1980.

27

Buol, S. W. and P. A. Sanchez. Rainy tropical climates: physical potential present and improved farming systems. 11th Int. Soil Science Congress (Edmonton) 2:292-312. 1978.

Calvert, C. S., S. W. Buol and S. B. Weed. Mineralogical characteristics and transformations of a vertical rock-saprolite-soil sequence in the North Carolina Piedmont. I. Profile morphology, chemical composition and mineralogy. Soil Sci. Soc. Am. J. 44:1096-1103. 1980a.

Calvert, C. S., S. W. Buol and S. B. Weed. Mineralogical characteristics and transformations of a vertical rock-saprolite-soil sequence in the North Carolina Piedmont. II. Feldspar alteration products - their transformations through the profile. Soil Sci. Soc. Am. J. 44:1104-1112. 1980b.

CIAT. Annual reports for 1972 to 1979. Centro Internacional de Agricultura Tropical, Cali, Colombia. 1971 to 1980.

Cochrane, T. T. An ongoing appraisal of the savanna ecosystems of tropical America for beef cattle production. In: P. A. Sanchez and L. E. Tergas (eds.) Pasture Production in Acid Soils of the Tropics. Centro Internacional de Agricultura Tropical, Cali, Colombia. pp. 1-12. 1979.

Cochrane, T. T., J. A. Porras, L. G. de Azevedo, P. G. Jones and L. F. Sanchez. An explanatory manual for CIAT's computerized land resource study of tropical America. Centro Internacional de Agricultura Tropical, Cali, Colombia. 1979.

Cochrane, T. T. and P. A. Sanchez. Land resources, soils and their management in the Amazon region: a state of knowledge report. In: S. B. Hecht (ed.) Amazonia: Agriculture and Land Use Research. CIAT, Cali, Colombia. pp. 137-209. 1982.

Collins, J. F. and S. W. Buol. Effects of fluctuations in the Eh-pH environment on iron and/or manganese equilibria. Soil Sci. 110:111-118. 1970.

Date, R. A. and J. Halliday. Selecting Rhizobium for acid infertile soils of the tropics. Nature 227(5691):62-64. 1979.

Daniels, R. B., E. E. Gamble and S. W. Buol. Oxygen content in the ground water of some North Carolina Aquults and Udults. Soil Sci. Soc. Am. Spec. Publ. Field Soil Water Regime. Madison, Wisc. pp. 153-166. 1973.

EMBRAPA (Empresa Brasileira de Pesquisa Agropecuaria). Levantamento de Reconhecimento dos Solos do Distrito Federal. Veniculada ao Ministerio da Agricultura, Servico Nacional de Levantamento e Conservacao de Solos. Boletin Tecnico No. 53. p. 455 maps. 1978.

EPAMIG. Recomendacoes para o uso de corretivos e fertilizantes em Minas Gerais. 3a. aproximacao. Comissao de Fertilidade do Solo do Estado de Minas Gerais, Belo Horizonte, Brasil. 80 p. 1978.

Eswaran, H. and W. C. Bin. A study of a deep weathering profile on granite in peninsular Malaysia. I. Physicochemical and micromorphological properties. Soil Sci. Soc. Am. J. 42:144-149. 1978.

Fenster, W. E. and L. A. Leon. Management of phosphorus fertilization in establishing and maintaining improved pastures on acid, infertile soils of tropical America. In: P. A. Sanchez and L. E. Tergas (eds.) Pasture Production in Acid Soils of the Tropics. CIAT, Cali, Colombia. pp. 109-122. 1979.

Gonzalez-Erico, E., E. J. Kamprath, G. C. Naderman, W. V. Soares e E. Lobato. Efeito da profundidade de incorporacao de calcareo na cultura do milho em solo acido de Cerrado do Brasil Central. Anais XI Congr. Bras. Ciencia de Solo (Campinas). Pag. 299-302. 1975.

Halliday, J. Field responses by tropical legumes to inoculation with Rhizobium. In: P. A. Sanchez and L. E. Tergas (eds.) Pasture Production in Acid Soils of the Tropics. CIAT, Cali, Colombia. pp. 123-138. 1979.

Hernandez, D. and A. J. Coutu. Economic evaluation of slash and burn cultivation options in Yurimaguas, Peru. Agronomy Abstracts 1981:42. 1981.

Hutton, E. M. Problems and successes of legume-grass pastures, especially in tropical America. In: P. A. Sanchez and L. E. Tergas (eds.) Pasture Production in Acid Soils of the Tropics. CIAT, Cali, Colombia. pp. 81-94. 1979.

Jenny, H. Factors of Soil Formation. McGraw-Hill. p. 281. 1941.

Kornelius, E., M. G. Sauressig and W. J. Goedert. Pastures establishment and management in the Cerraco of Brazil. In: P. A. Sanchez and L. E. Tergas (eds.) Pasture Production in Acid Soils of the Tropics. CIAT, Cali, Colombia. pp. 147-166. 1979.

Kubiena, W. L. Soils of Europe. T. Murby and Co., London. 1953.

Lepsch, I. F., S. W. Buol and R. B. Daniels. Soils-landscape relationships in the Occidental Plateau of Sao Paulo State, Brazil. I. Geomorphic surfaces and soil mapping units. Soil Sci. Soc. Am. J. 41:104-109. 1977a.

Lepsch, I. F., S. W. Buol and R. B. Daniels. Soil-landscape relationships in the Occidental Plateau of Sao Paulo State, Brazil. II. Soil morphology, genesis and classification. Soil Sci. Soc. Am. J. 41:109-115. 1977b.

Lobato, E. and W. Goedert. Increasing the productivity of the Brazilian Cerrado. Proc. Int. Seminar on Soil Environment and Fertility Management in Intensive Agriculture, Society of the Science of Soil and Manure. Tokyo, Japan. pp. 462-471. 1977.

Lopes, A. S. Microelements in soils of the tropics as a constraint on food production. In: Priorities for Alleviating Soil-Related Constraints in the Tropics. IRRI, Los Banos, Philippines. pp. 277-298. 1980.

Lopes, A. S. and F. R. Cox. A survey of the fertility status of surface soils under Cerrado vegetation in Brazil. Soil Sci. Soc. Amer. J. 41: 742-747. 1977.

Marbut, C. F. The contribution of soil surveys to soil science. Soc. Prom. Agr. Sci. Proc. (1920) 41:116-142. 1921.

Moniz, A. C. and S. W. Buol. Formation of an Oxisol-Ultisol transition in Sao Paulo, Brazil. I. Double-water flow model of soil development. Soil Sci. Soc. Am. J. 46:1228-1233. 1982.

Moniz, A. C., S. W. Buol and S. B Weed. Formation of an Oxisol-Ultisol transition in Sao Paulo, Brazil. II. Lateral dynamics of chemical weathering. Soil Sci. Soc. Am. J. 46:1234-1239. 1982.

NCSU (North Carolina State University). Tropical Soils Research Program. Annual Reports. Soil Science Department. Raleigh, N.C. 1971-1980.

Piha, M. and J. J. Nicholaides. Field evaluation of legume, sweet potato and rice varieties for tolerance to soil acidity. Agronomy Abstracts 1981:45. 1981.

Ritchey, K. D. (ed.) Potassium fertility in Oxisols and Ultisols of the humid tropics. Cornell Int. Agr. Bull. 37. Cornell University, Ithaca. N.Y. 45 p. 1979.

Ritchey, K. D., M. G. Djalma, E. Lobato and D. Correa. Calcium leaching to increase rooting depth in a Brazilian savanna Oxisol. Agron. J. 72:40-44. 1980.

Salinas, J. G. Differential response of some cereal and bean cultivars to Al and P stress in an Oxisol of Central Brazil. Ph.D. Thesis. North Carolina State University, Raleigh, N.C. 326 pp. 1978.

Sanchez, P. A. Properties and Management of Soils in the Tropics. Wiley, New York. 618 p. 1976.

Sanchez, P. A. A legume-based pasture production strategy for managing and infertile soils of tropical America. In: Soil Erosion and Conservation in the Tropics. Amer. Soc. of Agron. Spec. Pub., Madison, Wisc. pp. 97-120. 1982.

Sanchez, P. A., D. E. Bandy, J. H. Villachica and J. J. Nicholaides. Amazon Basin soils: management for continuous crop production. Science 210:821-827. 1982.

Sanchez, P. A. and S. W. Buol. Soils of the tropics and the world food crisis. Science 188:598-603. 1975.

Sanchez, P. A. and T. T. Cochrane. Soil constraints in relation to major farming systems in tropical America. In: Priorities for Alleviating Soil-Related Constraints to Food Production in the Tropics. IRRI, Los Banos, Philippines. pp. 107-139. 1980.

Sanchez, P. A. and R. F. Isbell. A comparison of the soils of tropical America and tropical Australia. In: P. A. Sanchez and L. E. Tergas (eds.) Pasture Production in Acid Soils of the Tropics. CIAT, Cali, Colombia. pp. 25-54. 1979.

Sanchez, P. A. and J. G. Salinas. Low-input technology for managing Oxisols and Ultisols in tropical America. Adv. Agron. 34:279-406. 1981.

Sanchez, P. A. and L. E. Tergas (eds.) Pasture Production in Acid Soils of the Tropics. Series 03EG-5. Centro Internacional de Agricultural Tropical, Cali, Colombia. 488 p. (English). 524 p. (Spanish). 1979.

Serrao, E. A. S., I. C. Falesi, J. B. da Viega and J. G. Texeira-Neto. Productivity of cultivated pastures on low fertility soils of the Amazon of Brazil. In: P. A. Sanchez and L. E. Tergas (eds.) Pasture Production in Acid Soils in the Tropics. CIAT, Cali, Colombia. pp. 195-225. 1979.

Seubert, C., P. A. Sanchez and C. Valverde. Effect of land clearing methods on soil properties and crop performance in an Ultisol of the Amazon jungle of Peru. Trop. Agric. (Trinidad) 54:307-321. 1977.

Soil Survey Staff. Soil Taxonomy. Agr. Handbook 436. U.S. Govt. Print. Off. Washington, D.C. p. 754. 1975.

Spain, J. M. Pasture establishment and management in the Llanos Orientales of Colombia. In: P. A. Sanchez and L. E. Tergas (eds.) Pasture Production in Acid Soils of the Tropics. CIAT, Cali, Colombia. pp. 167-176. 1979.

Stephans, C. G. A Manual of Australian Soils, 3rd ed. CSIRO, Melbourne, Australia. 1962.

Toledo, J. M. and E. A. S. Serrao. Pastures and animal production in Amazonia. In: S. B. Hecht (ed.) Amazonia: Agriculture and Land Use Research. CIAT, Cali, Colombia. pp. 281-309. 1982.

Tyler, E. J., S. W. Buol and P. A. Sanchez. Genetic association of soil properties encountered in a detailed soil survey in the upper Amazon Basin of Peru. Soil Sci. Soc. Am. J. 42:771-776. 1978.

Valverde, C. and D. E. Bandy. Production of annual food crops in the Amazon. In: S. B. Hecht (ed.) Amazonia: Agricultural and Land Use Research. CIAT, Cali, Colombia. pp. 243-280. 1982.

Wade, M. K. and P. A. Sanchez. Mulching and green manure applications for continuous crop production in the Amazon Basin. Agron. J. 79:39-45. 1983.

Weaver, G. T. The quantity and distribution of four nutrient elements in high-elevation forest ecosystems, balsam mountains, North Carolina. In: F. G. Howell et al. (eds.) Mineral Cycling in Southeastern Ecosystems. Tech. Inf. Off., Off. Pub. Aff., U.S. Energy Res. and Dev. Adm. pp. 715-728. 1975.

Yost, R. S., E. J. Kamprath, E. Lobato and G. Naderman. Phosphorus response of corn on an Oxisol as influenced by rates and placement. Soil Sci. Soc. Amer. J. 43:338-343. 1979.