630.72
H136

ISN - 16218; PS73

PN-AAC-272

AGRICULTURAL DEVELOPMENT, INDUSTRIALIZATION, AND FOOD AID IN A DUAL ECONOMY:

A FIVE SECTOR THEORETICAL ANALYSIS

Agricultural Development, Industrialization, NTIS
630.72 Iowa State Univ. Center for Agricultural and
H136 Rural Development.
IWU86 Agricultural Development, Industrialization,
and Food Aid in a Dual Economy: Five Sector Te
ISN: 16218 Theoretical Analysis. Walter Haessel. Apr. 1970.
IOC: PS73 166 p.
Bibliography:p. 162-166.
Contract AID/csd-2163.
Project. 931-17-140-491.

1. Sector analysis - Agriculture. 2. Sector analysis - Industry. 3. Development research. 4. Industrialization. 5. Food aid programs. 6. [illegible]ls (Economic). I. Title. II. Haessel, Walter. III. Contract.

CENTER FOR AGRICULTURAL AND RURAL DEVELOPMENT

IOWA STATE UNIVERSITY

AMES IOWA

PN-ABJ 272

AGRICULTURAL DEVELOPMENT, INDUSTRIALIZATION, AND FOOD AID IN A DUAL ECONOMY: A FIVE SECTOR THEORETICAL ANALYSIS

by

Walter Haessel

This study was completed while the author was with the Center for Agricultural and Economic Development, Iowa State University.

Center for Agricultural and Economic Development

Iowa State University

and the

Agency for International Development

Washington, D.C.

Cooperating

Report No. 4

Developmental Series

Ames, Iowa

April 1970

FOREWORD

Resource allocation, employment creation, income distribution, and welfare maximization have been widely discussed and analyzed in various studies of economic growth and development. Such studies have generaly concentrated on individual aspects of these topics without attempting to interrelate them. This latter process, however, is required of the simplest and the most complex planning bodies in developed as well as underdeveloped countries. For economic analysis to be useful to such planners, there is need for economic research to approach resource allocation and welfare maximization from an integrated viewpoint.

With the importance that governmental planning and investment have assumed in underdeveloped economies in recent years, the needs for economic analysis have changed. It has become a more complex and difficult process and its interpretation for policy makers similarly has become more involved. Research that is unintelligible to policy makers or which approaches problems from the standpoint of only one group or sector will not assist them in their function of allocating scarce resources among completing ends to maximize levels of human welfare. And as economies become more complex the research process also becomes more complicated. The successful completion of the planning process requires a constant flow of information and analysis based on firm theoretical principles, rigorous analytical concepts and a thorough interrelating of all aspects of the planning process.

The study contained in this report provides an initial step at drawing together the quite complicated procedure of planning resource allocation in dual economies. It represents the kind of analysis that when fully developed will provide decision makers the kinds of information necessary for policy decisions. These decisions involve use and quantities of factors in production, quantities and prices of products produced and amounts and distributions of income generated. On these kinds of decisions depends the growth or stagnation of the economy which is involved. Further, on the basis of growth or stagnation lies economic and particularly political stability. These realities reinforce the importance of developing economic tools to assist in the decision-making process.

Finally, in recent years the process of assisting underdeveloped countries through transfers of aid-in-kind has greatly expanded. This aid has certain characteristics which raise special problems of resource allocation. This study has undertaken to examine the merits of alternative allocation processes for aid-in-kind. Such studies can assist policy makers in both aid-giving nations and in aid-recipient nations growth and consumer welfare. Both are of extreme importance for successful growth and development of economies with low incomes, low investment and low productivity. We believe this study represents an initial start toward better understanding this set of conditions.

A final note, Walter Haessel was a research associate in the Center for Agricultural and Economic Development, Iowa State University when this research was conducted. He now is at the University of Western Ontario, Canada.

Earl O. Heady
Executive Director

Leo V. Mayer
Project Director

May 1971
Ames, Iowa.

TABLE OF CONTENTS

	Page
ABSTRACT	v
CHAPTER I. INTRODUCTION	1
Objectives	2
Organization of the Study	3
The Problem: Industrialization and Agricultural Development	4
Industrialization	4
Agricultural development	12
Alternative Methods of Investigation	17
Interdisciplinary approach	17
Economic history and growth stage generalizations	19
Dual-economy models	20
The Models: A Heuristic Exposition	24
The decentralized model	24
The centralized model	34
A Summary of Conclusions	35
Public investment in subsistence agriculture	35
Investment in subsistence versus commercial agriculture	39
Private capital accumulation	40
Population growth and economic development	42
Some Intracountry Effects of Food Aid	43
CHAPTER II. THE DECENTRALIZED MODEL	49
Notation	49
The Welfare Function	52
The Production Functions	55
Government Expenditures and SOC	58

Page

Factor Availabilities 61

Land 61
Labor and wage rates 62
Manufactured inputs 63
Capital stocks 63

Income Distribution and Flows 64

Subsistence sector 65
Commercial agriculture 66
Manufacturing and capital goods sectors 67
Labor income and consumption restraints 68

Private Investment 69

Wage, Price and Output Determination 72

Supply response in agriculture - a digression 78

Finite Planning Horizons and Post-Plan Considerations 80

CHAPTER III. OPTIMIZATION OF THE DECENTRALIZED MODEL 83

The Lagrangean Function 83
The First-Order Conditions 85
Investing in SOC in the Subsistence Sector 90
Alternative Investment Opportunities 93

CHAPTER IV. ANALYSIS OF THE CENTRALIZED MODEL 96

A Reformulation of the Model 96
The First-Order Conditions 99
SOC Accumulation 103

Some simplifying assumptions and notation 105
Relaxing the simplifying assumptions 108
The significance of A_t and B_t 110

Economic considerations influencing the desirability of investing in subsistence versus commercial SOC 114
Summary and conclusions 118

Private Capital Accumulation 119

The relative social desirability of investment alternatives 120
Economic factors affecting private investment 121

Page

The share of capital 122
Social valuation of outputs 122
The rate of technical change and SOC accumulation 126
Changes in the terms of trade 127

Summary 128

Private Investment Versus SOC Accumulation 130

CHAPTER V. AN ANALYSIS OF THE IMPACT OF FOREIGN AID 134

Grants of Food to Consumers 135
Food Aid for Work Projects or Wages in Kind 138
Market Sales of Food 139
Comparisons Among the Three Distribution Alternatives 142
Some Comments on Commodity Aid in General 146

CHAPTER VI. EMPLOYMENT, LABOR SUPPLY, AND POPULATION GROWTH 149

Employment with Fixed Wage Rates and Inelastic Labor Supply 149
The Implications of an Elastic Supply of Labor 154
Employment and Wage Rates Through Time 156

The effects of technical change and capital accumulation 156
The effects of population growth 157

Constant population growth 157
Population growth as a function of the subsistence wage rate 159
Food aid and population growth 160

LITERATURE CITED 162

ABSTRACT

During the past thirty years, considerable effort has been expended on the analysis of the determinants of economic growth. One of the central, unresolved issues in this query is the nature of the interrelationships between agricultural development and industrialization. For many years industrialization was believed to hold the key to successful economic development. During the last decade, however, several theories and some empirical evidence have been presented which indicate a more significant role for the agricultural sector. Some of the literature pertaining to this subject is reviewed in chapter I.

The general purpose of this study is to investigate the interrelationships between the agricultural and nonagricultural sectors during the process of economic development. The major portion of the study is devoted to a theoretical analysis of these intersectoral relationships. A five-sector, optimizing model of an underdeveloped, dual economy is formulated and extensively analyzed. The five sectors in the model include subsistence or traditional agriculture, commercial agriculture, manufacturing goods production, capital goods production, and a government sector. Three products are produced: agricultural goods which can only be consumed, manufacturing goods which can either be consumed or used as nondurable factors of production, and capital goods which can only be used as durable factors of production.

The factors of production included in the model are land, labor, capital, and manufactured inputs. Production in the traditional agricultural sector requires land, labor, and manufactured inputs; production in the commercial agricultural sector requires capital goods in addition to the factors employed in the subsistence sector. Manufactured goods and capital goods

production do not require land as an input and employ only labor, manufactured inputs, and capital as factors. Labor is assumed to be employed at a constant wage rate (measured in terms of manufactured goods) in the commercial agricultural sector, the manufacturing goods sector, and the capital goods sector. Any labor which cannot earn its marginal value productivity in these three sectors is employed in the subsistence sector at a lower wage rate.

The optimand is a quadratic function of aggregate levels of agricultural and manufactured goods consumption. This function approximates Engel's law in the sense that as per capita consumer income rises, the proportion of income spent on food (agricultural goods) declines. The government uses the instruments of fiscal spending to maximize this welfare function over a finite horizon.

Two formulations of the model are considered, with the role of the government being the principal difference between the two models. In the first formulation, the government has control over four investment alternatives. These four alternatives are investment in social overhead capital in either the subsistence or commercial agricultural sectors, and investment in "private" capital in either the manufacturing or the capital goods sectors. In the second formulation, the government's role is expanded considerably to include control over the allocation of private investment funds as well as public tax revenue.

These two versions of the model are extensively analyzed in an attempt to discern the economic and physical characteristics of an economy that would tend to make it socially desirable to develop agriculture relative to industry, and vice versa. Similarly, an attempt is made to delineate

conditions which tend to make the development of subsistence agriculture socially more desirable relative to the development of commercial agriculture. While the basic model does not include foreign trade an attempt is made to investigate the impact of various types of commodity aid on the closed system. In particular, the impact of food aid and capital goods aid is investigated. The implications for the optimal developmental process of alternative rates of population growth are examined.

Many of the earlier studies of the interrelationships between the agricultural and nonagricultural sectors have argued that agriculture forms an important source of savings for capital formation in the nonagricultural sectors. In this study it is demonstrated that it may be socially desirable to have a net flow of savings into agriculture rather than bleeding agriculture through taxation and other means to finance industrialization. It is impossible to determine a priori whether there should be a net flow of savings into or out of agriculture.

CHAPTER I. INTRODUCTION

One of the central, unresolved issues in the investigation of the determinants of economic growth is the nature of the interrelationships between agricultural development and industrialization. In earlier discussions of developmental priorities, industrialization was often advocated as the means whereby successful economic development could be achieved. During the 1940's and 1950's it was widely believed that development of the industrial sector would provide employment opportunities for underemployed and unemployed labor and would result in increased demand for agricultural products. Thus, the industrial sector as the leading sector would pull the backward agricultural sector to higher levels of development. Agriculture was largely considered to be passive in the developmental process.

During the last decade, however, several theories of economic development and much empirical evidence have been presented which indicate a more significant role for the agricultural sector may be appropriate in the developmental process. Increased emphasis is now being placed on the formulation and implementation of developmental policies which exploit the interrelationships between the industrial and agricultural sectors in a manner which promotes mutual development. It is now widely believed that there is no unique blend of agricultural development and industrialization that will be best for all countries. The relative emphasis to be given to each must vary according to the country, its resource endowment, and its phase of development.[1]

---

[1]Eicher and Witt (10, pp. 7-10), Meier (37, Ch.6), Ruttan (54, pp. 1-2), Thorbecke (59, pp. 3-7), and Witt (66) all express similar views about the evolution of thoughts. However, these views are not unanimously endorsed by either policy-makers or economists. Enke goes so far as to suggest that"...most LDC (less-developed country) governments associate industrialization with development and hence favor an expansion of industrial output that exceeds the ability of a neglected agriculture to support it"

Objectives

The purpose of this study is to investigate the nature of the relationships between the agricultural and nonagricultural sectors during the process of agricultural development. In addition, the following specific objectives may be enumerated:

1. To review some of the literature pertaining to this topic.
2. To develop a rigorous, theoretical model encompassing as many agricultural-nonagricultural intersectoral relationships as consistent with operationalism.
3. To incorporate into this model as much realism or empirical relevance as possible within a rigorous, operational framework.
4. To include the government as an integrated entity in this model.
5. To use this model to analyze the optimal allocation of private and public (government) savings between the agricultural and nonagricultural sectors.
6. To identify characteristics of economies that tend to make agricultural development socially desirable relative to industrialization and vice versa.

(11, p.1127). As another example, in 1968, Higgins wrote that "Economic development in the past has consisted very largely of transferring population from low-productivity agriculture to much higher productivity industrial occupations, thus reducing population pressure on the land and permitting agricultural improvement in the form of large-scale mechanized agriculture at the same time" (17, p. 464-465). Higgins uses this as a basis for advocating industrialization as the "engine for growth".

7. To investigate whether, and under what conditions, it would be desirable to have a net inflow of savings into the agricultural sector.
8. To analyze the impact of commodity aid, and, in particular, food aid on the prices and quantities produced and on the investment priorities within the economy.
9. To investigate the implications of alternative rates of population growth on the optimal investment priorities and development plans.

In addition to gaining some insight to the problems listed in the foregoing objectives, numerous other results are obtained during the analysis. These are discussed throughout the study.

Organization of the Study

The remainder of this chapter is devoted to a nontechnical discussion of the agricultural development - industrialization issue. The immediately following section reviews some of the better-known arguments pertaining to this issue. This is followed by a brief discussion of alternative methods of analyzing the problem. The chapter is concluded with a heuristic description of the models developed in this study and a fairly extensive summary of the major conclusions. This chapter is primarily intended to be a nontechnical exposition of the methods of analysis and principal conclusions of the present study.

Chapter II is devoted almost exclusively to the formulation of a model termed the decentralized model for reasons that will become obvious. The model developed is an optimizing model and the optimizing technique is

discussed in Chapter III. After a preliminary analysis of the optimum conditions, it is concluded that the model can be simplified by a reformulation within a centralized-economy framework with results very similar to those obtained for a decentralized economy. In addition, a number of highly restrictive and unrealistic assumptions are relaxed through this reformulation.

The centralized model is developed and extensively analyzed in Chapter IV. It is in that chapter that many of the objectives of the study are fulfilled. The impact of foreign aid is analysed in Chapter V, and Chapter VI is devoted to an investigation of the implications of relaxing some of the assumptions that underlie most of the study. Finally, Chapter VII provides a summary of the conclusions of the study.

The Problem: Industrialization and Agricultural Development

Many of the arguments for either industrialization or agricultural development are doctrinaire. An argument in favor of industrialization is frequently viewed as an argument against agricultural development and vice versa. While it is true that industry and agriculture compete for resources, an argument in favor of one need not to be an argument against the other since there are certain interrelationships and complementarities between the two sectors which can and should be exploited. However, a brief review of some of the arguments in favor of industrialization and agricultural development may be useful.[1]

Industrialization

Some of the more common arguments in favor of industrialization in

---

[1]No attempt has been made at completeness. When this study was essentially completed, a relevant survey article by Johnston (20a) appeared with a fairly extensive bibliography. Interested readers will be well advised to consult his bibliography for additional references.

less-developed areas are briefly outlined in this section. Not all are logically defensible arguments and some are based on erroneous assumptions. Some of these arguments are more appropriately considered to be emotional or passionate appeals favoring industrialization.

Perhaps the most common argument presented in favor of industrialization is the high correlation in various countries between per capita income and the proportion of the labor force employed in nonagricultural activities. Economic history suggests that rising per capita incomes have always been accompanied by a reduction in the relative size of the agricultural labor force.[1] Similarly, the proportion of the total output originating from the agricultural sector tends to decline as per capita income increases.[2] Thus, economic development is associated with industrialization. Prebisch goes so far as to state that "...industrialization is an inescapable part of the process of change accompanying a gradual improvement in per capita income" (48, p. 251).

Along similar lines, Myrdal (41, p. 1151) suggests that the very rapid development of industry through government planning in the Soviet Union has had a very important influence on planning activities in many

---

[1]See, for example, Ojala (46), or the massive works of Colin Clark (8). Zimmerman conducted a cross-sectional study in which he regressed the log of per capita income (y) on the percentage of the labor force (x) employed in nonprimary (secondary and tertiary) sectors for a number of economic-geographic regions and various points in time. He found the relationship $\log y = 0.0202x + 1.3235$, with a high correlation ($R=0.92$). As Zimmerman indicates, however, this does not imply causation. A country need not be poor because a large portion of the population is in the agricultural sector. See Zimmerman (67, ch.3). Conversely, industrialization and the accompanying structural changes are neither necessary nor sufficient conditions for increasing per capita income. Viner (62, ch. 3) is very critical of this type of argument, which Ruttan (53, p. 19) has called the structural transformation hypothesis.

[2]See, for example, Kuznets (30, pp. 43-58). Additional references can be found in Johnston (20a).

countries in South Asia. An economy centered around a comprehensive industrial structure based on heavy industry is now widely accepted by many leaders as a natural economic structure for a large underdeveloped country to emulate. The Soviet successes in developmental planning are very persuasive to the leaders in many of these countries.[1]

Perhaps one of the more compelling and logically tenable reasons for industrialization in many developing countries is the prospect of earning inadequate foreign exchange from traditional exports to import the required manufactured goods. Bhagwati suggests that, "It is possible to argue that poor countries should continue producing primary products only if it can be established that they could always earn enough foreign exchange to import their manufactures. Where this is not so, industrialization is a rational consequence" (3, p. 165). The implicit assumption in this argument is that industrialization will improve the balance of payments position either through import substitution or by expanding exports.[2] However, Myrdal suggests that, "Import substitution may ease the foreign exchange position in the

---

[1] This argument suffers from the same logical weakness as the structural transformation hypothesis. Success with this method in the Soviet Union does not mean repeating the same process elsewhere will produce similar results.

[2] Bhagwati uses the following example to illustrate the necessity of investing in heavy industry (such as steel plants). If a country wants to invest $250 million in plant and equipment (e.g., tractors and fertilizer plants) in a particular year, but only expects to earn $100 million in foreign exchange, the only possibility for carrying out the investment program is to produce the necessary plant and equipment (3, p. 166-168). In this example, there is an implicit assumption that using the limited foreign exchange earnings to establish heavy industry will allow the investment program to be successfully executed.

long run, but in the short run it usually aggravates it" (41, p. 1161). This is because short run imports of capital goods are usually required to establish import-substitution industries. The establishment of import substitution industries need not necessarily ease the balance of payments situation in the long run if raw materials must be imported to manufacture the import substitutes.

Another often cited reason in favor of industrialization is that thi will raise the productivity of the labor force. There is evidence to suggest that the product per worker in the agricultural sector is below the product per worker for the economy as a whole in both developed and underdeveloped countries. However, the disparity in the less-developed nations appears to be greater.[1] Thus, industrialization has a direct effect on productivity by increasing the portion of the labor force in the more-productive, nonagricultural sectors. An additional indirect influence on productivity is presumably realized since, in many countries, agriculture i subject to diminishing returns because of fixed land resources. Hence, transferring labor out of agriculture reduces the labor/land ratio and thereby permits an additional productivity increase. The limiting case in this argument is when there is assumed to be so much labor in the agricultural sector that its marginal physical productivity is zero. The implication of this is that labor can be withdrawn from the agricultural

---

[1] See, for example, the works by Bellerby (2) and Kuznets (29, pp.41: 417). Kuznets makes the additional observation that the ratio of populatic to labor force in the agricultural sector is higher than for the nonagricu: tural sectors. Consequently, the disparity of product per capita between the sectors is even greater than the disparity of product per worker. Myr (41, p. 1157) points out that since the capital/labor ratio in manufacturir is usually higher than in traditional agriculture there is some question concerning the meaning of comparisons of product per worker between manufacturing and agriculture.

sector without a concomitant reduction in agricultural production. The assumed pool of redundant labor in the agricultural sector in the form of disguised unemployment led to great optimism for developmental possibilities during the 1950's.[1]

Closely related to the productivity argument is the view that industrialization will create new jobs and result in employment for unemployed members of the labor force. Providing new jobs is considered to be extremely important in many less-developed nations since the labor force is expanding very rapidly. Widespread unemployment or underemployment is frequently believed to be the result of the failure of capital and most complementary means of production to increase at the same rate as the supply of labor in secondary and tertiary activities.[2] The proposed solution is to increase the rate of capital accumulation thereby increasing the number of jobs. While employment creation is frequently used as an

---

[1] The implications for the development of an economy with "surplus labor" in the sense of zero marginal physical productivity of labor in the subsistence sectors was first discussed by Lewis (33). There has been a great deal of controversy over the assumption of surplus labor. After surveying the relevant literature, Kao, Anschel, and Eicher conclude that, "To date, there is little reliable empirical evidence to support the existence of more than token - five percent - disguised unemployment in underdeveloped countries as defined by a zero marginal product of labor and the condition of ceteris paribus" (26, p. 141).

[2] See, for example, Navarrete and Navarrete (42). Under strictly neoclassical assumptions with flexible wage rates and prices, there is no reason for any labor to be unemployed even with a rapidly expanding labor force. For an excellent analysis of why unemployment may continue to persist in less-developed economies, see Eckaus (9).

argument in favor of industrialization, it is widely recognized that the number of jobs created is usually not sufficient to absorb the natural increase in the labor force. The reason is that the base from which industrial employment starts is very small relative to the total labor force.[1]

Another view holds industrialization to be crucial to development because it will radiate stimuli throughout the economy. Establishment of industry A will generate a demand for certain inputs which are not domestically produced because of insufficient demand. However, the additional demand resulting from the establishment of industry A provides an incentive to establish an import substitution industry. This type of stimulus has become known as a backward linkage. In addition to backward linkages, forward linkages or stimuli may also be operative if industry A produces products which require further processing.[2]

---

[1]Myrdal cites several statements from the development plans of Burma, India, Pakistan and Ceylon indicating the awareness of the planning authorities in those countries that industrialization does not create very many new jobs. In addition to not creating many new positions, industrialization also tends to have "backwash" effects on existing industry, especially cottage industry. Myrdal concludes that although the estimates made by the planners are crude, "...an important conclusion about the employment-creating potential of industrial expansion can be sustained by the statistical calculations of governments - namely, that industrial expansion, when beginning from a low base, cannot directly have more than a peripheral uplifting effect on (occupational) participation ratios during a very considerable early period" (41, p. 1199). See also pages 1172-1205.

[2]An extensive discussion of the importance and nature of linkages can be found in Hirschman (18). Regarding the industrialization issue, Hirschman concludes that agriculture in general and subsistence agriculture in particular have very weak linkage effects and that "...the superiority of manufacturing in this respect is crushing. This may yet to be the most important reason militating against any complete specialization of under-developed countries in primary production" (18, p. 110).

A second type of stimulus has also been cited as an argument in favor of industrialization. The increased incomes generated by the establishment of new industries leads to increased demands for consumer goods which will result in expanded markets and, hence, provide additional profitable investment opportunities. Considerations of this type have been used to argue that it is desirable and perhaps even necessary to initiate investment projects in a number of industries at the same time since this will make investments in the individual industries more profitable. This has become known as the balanced growth argument.[1]

The increased income associated with industrialization is supposed to have an additional positive feature. Specifically, with higher income levels the volume of savings is expected to be larger and, hence, additional investments will become progressively easier. This will be particularly true if, as is often assumed, the saving rate rises as per capita incomes rise.[2]

Sometimes the case for industrialization is argued on the basis of political arguments. For example, a country may decide to industrialize even if it appears that it can continue as a primary producer and rely on trade for imports of manufactured consumer and capital goods. Two reasons are frequently cited for doing so. The first of these is that, in the interests of national security, a certain amount of self-sufficiency in

---

[1] Many versions of the balanced growth argument have been presented. The demand version was first discussed by Rosenstein-Rodan (50) and later popularized by Nurkse (45). For a criticism of the balanced growth argument, see Hirschman (18, Ch. 3).

[2] The importance of this point has been emphasized by many writers. For example, Rostow (51, p. 281) regards raising the net saving rate in less-developed countries to over ten percent of national income as a necessary (but not sufficient) condition for take-off into self-sustained growth. See also Lewis (33, p. 155).

manufactured and capital goods production may be desirable during a political crisis. A second reason given is that in many newly independent countries there is a strong desire to reverse the colonial economic pattern which frequently involved producing primary products for export, and perhaps some manufacturing of consumer goods for local consumption. This pattern is believed to have evolved largely as the result of the laissez-faire policies pursued by the colonialists in assigning the colonies the roles of suppliers of raw materials and consumers of manufactured products.[1] Thus, many countries place heavy emphasis on industrialization in their development plans.[2]

The importance of social and cultural characteristics in economic development is widely recognized.[3] It is sometimes argued that industrialization tends to condition cultural values in a manner that will be conducive to further development. The idea is that industrialization will modernize the outlook of the individuals affected and create a more suitable environment for technological progress.

Thus, a milieu of economic, sociological, political and historical factors may interact to make industrialization a desirable policy. This does not, however, make industrialization imperative. There may well be

---

[1] Myrdal (41, pp. 1151-1152) refers to this as the Communist doctrine of colonial exploitation.

[2] The failure of industry to develop under laissez-faire policies is one of the arguments which have been advanced to justify development planning. See Meier (37, Ch. 8).

[3] An interesting attempt to empirically identify the relative importance of certain social and political elements on the potential for economic development has been made by Adelman and Morris (1).

certain underdeveloped countries that will find it profitable to continue to specialize in traditional and primary production. In the following section, some of the reasons favoring agricultural development are reviewed.

Agricultural development

Perhaps the most obvious reason for emphasizing the development of agriculture in less-developed economies is the contribution this will make to the growth of total and per capita product. This is particularly important since in many less-developed economies agriculture frequently contributes from 40 to 50 percent of the net output while employing over one-half of the labor force.[1] Thus, if agricultural output does not increase, the rate of growth of national income will fall short of the rate of growth of nonagricultural income. With the advent of the green revolution in agriculture, the possibilities for tremendous increases in agricultural productivity and output has led to increased emphasis of agriculture as a source of growth.[2] Also, failure to increase productivity in agriculture will tend to skew the Lorenz curve even further unless the creation of employment opportunities in nonagricultural pursuits permits sufficient

---

[1]Kuznets presents data for 1958 which indicate that for twelve countries with gross domestic product less than $200 per capita, 46 percent of the product originated from agriculture and related industries while employing 57.6 percent of the labor force (29, p. 402). Myrdal presents similar data for various low income countries in Asia. For example, during the 1954-56 period, 57 percent of the income in Pakistan originated from agriculture while employing 71 percent of the labor force. The analogous figures for South Vietnam indicate that 82 percent of the labor force was employed in the agricultural sector but this sector only contributed 34 percent of the income (41, p. 494).

[2]Mellor (39) exhibits great enthusiasm over the developmental prospects afforded by the green revolution. A more balanced viewpoint is presented by Wharton (64).

migration of labor out of agriculture to offset these productivity increases.[1]

A second type of benefit arising from agricultural development is exemplified by the various stimuli to the nonagricultural sectors resulting from increased demand for manufactured goods. These increased demands provide an opportunity for other sectors to develop and have been designated as market contributions.[2] Market contributions are essentially of two types. The development of agriculture is usually characterized by an increase in the demand for off-farm purchases such as fertilizers and insecticides. This provides stimuli in the form of economic incentives to develop these industries. The second type of market contribution is the increased demand for consumer goods by workers in the agricultural sector resulting from the increased incomes of these workers.[3]

The process of economic development usually results in severe strains on the balance of payments. Primary exports are frequently the principal source of foreign exchange earnings in less-developed countries.

---

[1] The disparity between agricultural and nonagricultural incomes is not limited to today's less-developed countries. This disparity persists in modern developed nations and has existed during the earlier phases of their development. See Bellerby (2).

[2] Kuznets (28, p. 63).

[3] The strength and importance of these stimuli to the industrial sectors will depend on, among other things, the size of the market created and the seriousness of the balance of payments situation. The establishment of one or more supply (or consumer goods) industries may also have second round effects through various linkages (see above) stimulating the establishment of satellite industries.

In many cases, expansion of agricultural output can contribute significantly to easing of the balance of payments constraint through expansion of exports if the country is in a food surplus situation, or through import substitution if the country is in a food deficit situation.[1]

The development of an investable agricultural surplus also contributes to general economic development through the factors which may be provided to the nonagricultural sectors.[2] Two types of factors are generally considered. Firstly, an agricultural surplus provides capital or, more correctly, funds for the purchase of material capital goods by the nonagricultural sectors. In a free enterprise system, this capital can be transferred through either taxation or in the form of private savings. Kuznets (28, p. 69) suggests the burden of taxation on the agricultural sector frequently exceeds the extent of the services provided to the agricultural sector by government spending. The residual benefits accrue to nonagricultural sectors either in the form of social overhead capital or

---

[1] Industrialization in the absence of agricultural development will lead to increased strains on the balance of payments in the short run for at least two reasons. Firstly, industrialization requires the import of vital capital goods which must be financed through either capital inflows or exports. Secondly, as higher proportions of labor move to nonagricultural employment, increased food is required to feed the nonagricultural population which must be imported or deducted from the exportable surplus if the economy is a food exporter.

[2] Nicholls (43) discusses the concept of an agricultural surplus and its potential contributions to development.

a subsidy to a particular industry or industries.[1] Private savings may be used to finance the purchase of essential capital goods in nonagricultural sectors, either through lending or direct investment.[2]

The second type of factor which is provided to the industrial sector is labor. The release of labor from the need to produce food is possible only when a marketable surplus of food is being produced. The transfer of labor implicitly involves a transfer of capital in the form of human capital since the agricultural sector has financed the rearing and training to maturity of any migrating laborers. In earlier discussions of development, the provision of labor for industrialization was considered to be one of the principal contributions of the agricultural sector in the earlier phases of development.[3] The emphasis now appears to be shifting to providing employment for the rapidly expanding labor force.[4]

Economic historians have compiled considerable evidence on the "necessity" for increases in agricultural productivity to sustain economic

---

[1]Mellor suggests that the central issue in agricultural developmental policy is "What level of taxes or other means of capital transfer can be placed on the agricultural sector and under what circumstances?" (40, p.27). Schultz thinks Mellor goes too far in his taxation proposals (56).

[2]Owen (47) discusses another type of forced intersectoral transfer of agricultural surplus. This transfer arises from the asymmetric market structures existing in the farm sector (competitive) and the farm supply and processing sectors (monopolistic and monopsonistic). Owen argues this market structure leads to an efficient means of intersectoral taxation since the farm suppl and processing sectors manage to extract any profits arising from productivity increases in agriculture. These profits accrue to these farm supply and processing industries where they can be used for industrial capital accumulation. Owen also discusses the extraction of the agricultural surplus in the "Communist" model of development.

[3]See for example, Lewis (33) and Johnston and Mellor (22).

[4]Compare the change in emphasis between Johnston and Mellor (22) and Johnston and Cownie (21). See also the recent articles by Todaro (61) and Harris and Todaro (16) which suggest the current interest appears to be more concerned with providing employment rather than releasing additional labor from agriculture.

growth.[1] In this connection, Kuznets concludes that "...an agricultural revolution - a marked rise in productivity per worker in agriculture - is a precondition of the industrial revolution for any sizeable region in the world".[2] Based on a review of the historical development of a number of nations, Nicholls reached a very similar conclusion when he stated that "...until underdeveloped countries succeed in achieving and sustaining (either through domestic production or imports) a reliable food surplus, they have not fulfilled the fundamental precondition for economic development" (44, pp. 366-367). Eicher and Witt go so far as to state that, "Economic historians generally concur that there are no cases of successful development of a major country in which a rise in agricultural productivity did not precede or accompany industrial development" (10, p. 8).

Based on the preceding summary it is apparent that the issue of industrialization versus agricultural development has not been resolved. Agreement probably will never be unanimous regarding the "best" route to development. The general trend in the literature appears to be evolving toward the view that there are certain complementarities between agriculture and industry which should be exploited. Essentially, it is the purpose of this study to investigate the agriculture-industrialization issue. In the following section, several alternative methods of investigation are discussed. This is followed by a section outlining the specific approach adopted in this study.

---

[1] In this connection, Gerschenkron (15a, p.357) suggests, "There should be a fine on the use of words such as 'necessary' or 'necessity' in historical writings. As one takes a closer look at the concept of necessity as it is appended to prerequisites of industrial development, it becomes clear that, whenever the concept is not entirely destitute of meaning, it is likely to be purely definitional: industrialization is defined in terms of certain conditions which, then...are metamorphosed into historical preconditions."

[2] Kuznets (30, pp. 59-60). In another statement, he suggests that, "One may conclude that a substantial rise in productivity of resources in the domestic agriculture sector is a condition of the large increase in overall productivity in modern economic growth" (29, p. 120)

Alternative Methods of Investigation

Three alternative approaches to the investigation of the industrialization-agricultural development issue are briefly discussed in this section. These are the interdisciplinary approach, the examination of economic history, and development theory.

Interdisciplinary approach

It has been widely acknowledge by economists that cultural, social, psychological and political factors are extremely crucial elements in the development process. Unfortunately, these factors are too frequently simply dismissed as necessary "preconditions" for economic development or given a very superficial treatment.[1] Whyte and Williams suggest that a major obstacle to conceptual integration of development research by economists and other social scientists is the difference in case size. "The economist generally focuses his analysis at the level of the nation, the economy as a whole, or some nationwide sector (the agricultural sector, for example). ....Sociologists, anthropologists and psychologists occasionally give attention to the national level, but their studies are more often concentrated on the behavior of particular individuals, groups, organizations and communities".[2]

---

[1] See, for example, Tinbergen (60, pp. 3-4) and Rostow (51, p. 11). Hoselitz (19, p. 53ff) suggests the preconditions that Western economists have in mind all too frequently are based on the type of socio-political organization which prevailed during the development of certain "Western success stories".

[2] Whyte and Williams (65, pp. 3-4). This allegation regarding the case size for economists appears to overlook a number of microeconomic studies relating to peasant agriculture. See, for example, Sen (58) and Georgescu-Roegen (15). It appears that the best prospects for theoretical integration are at the microeconomic level where the actions and attitudes of individuals can be studied. However, most of the studies relevant to the present investigation appear to be highly-aggregated, nationwide studies.

The issue of industrialization and agricultural development has been discussed almost exclusively at highly aggregate levels, most frequently on national levels. Most of the discussions of noneconomic considerations have involved the socio-economic implications of urbanization and transformation concomitant with industrialization. For example, Lewis (33, p. 159) discusses the need for the emergence of a new class of people, the capitalists. Essentially, very few discussions of the industrialization-agricultural development issue have considered the noneconomic aspects of the problem in any detail.

Perhaps the most important contributions from an interdisciplinary approach to problems of development are to be made in the area of micro-dynamics. Sociological and psychological factors are often cited as barriers to change.[1] Investigations of the problem of relaxing these barriers and getting people to adopt new techniques and means of production and trade and to accept other changes essential to development are best analyzed through an interdisciplinary approach. Economic incentives to change may be considered as necessary but not sufficient to motivate people in many instances involving socio-cultural factors. While interdisciplinary research on developmental problems is urgently required, at present there appears to be little prospect of shedding much light on the agricultural development-industrialization issue via this approach.

---

[1] See, for example, Brewster (5).

Economic history and growth stage generalizations

The recent interest in economic history has been aroused, at least in part, by Rostow's revival of the concept of stages of economic growth. Ruttan has recently reviewed the historical development of the concepts of stages and evaluates their potential contribution to policy making.[1]

Ruttan differentiates stage theories into three classes which he terms industrial fundamentalism (associated with F. List), structural transformation (A. G. B. Fisher and C. Clark) and leading sectors (W. W. Rostow). Ruttan concludes that, "All three stage theories....treat the transition from an agricultural to the industrial society as a major problem of development policy. Rostow's system is, however, the only one which clearly specifies a role for the agricultural sector in the transition process" (53, p. 22).

In his evaluation of the contributions of the stage theories to development policy, Ruttan reaches several conclusions which are pertinent to the present study. These are:

> 1. Clearly Rostow's leading sector model and the agricultural development approaches have helped focus attention on the critical role of the agricultural sector in the development process. Although agriculture may not contribute as a leading sector, over long periods, the historical record is consistent with the proposition that failure to achieve a technically progressive agriculture can dampen the whole process of economic growth....
>
> 2. The leading sector concept does add a potentially useful tool to our analytical capacity....
>
> 3. The basic limitation of the growth stage approach when employed as a guide to development policy is that it substitutes a search for economic doctrine in the form of historical generalizations, for the development of analytical power.... Policy prescriptions based on generalizations from a limited historical sample should....be based on observations drawn from the same "population"....

---

[1] See Ruttan (53, 54).

> 4. ....emphasis on the "take-off" and the differentiation of "stages" in both the general and agricultural stage approaches represents a "blind alley"....
>
> 5. ....a taxanomic scheme, utilizing growth stages as labels in its filing system, may represent a potential contribution to the analysis of economic development (53, pp. 32-33).

Other writers have also expressed dissatisfaction with historical generalizations and growth stage theories.[1] However, the criticisms of Ruttan appear to be most relevant for the present study. In particular, the lack of analytical power resulting from this approach appears to preclude the "historical" approach in the present study.

Dual-economy models

The third approach to the problem, and the one adopted in this study, is through the use of specialized, general equilibrium models known as dual-economy models.[2] The term dual-economy arises from the fact that economic activity in many less-developed nations can be divided into two distinct types of sectors. Various names have been given to these sectors such as the capitalist and the subsistence sectors,[3] the advanced or

---

[1] For criticisms of Rostow's version of growth stages, see the papers by Kuznets, Gerschenkron, Solow and others in Rostow (52). Lewis (34, p. 15) discusses some of the problems associated with historical generalizations.

[2] Ruttan (54) differentiates dualism into two types: static and dynamic. Static dualism, which includes sociological dualism and enclave dualism, relates primarily to the cultural and technological characteristics prevailing in many less-developed countries. Ruttan suggests that these technological and cultural characteristics are the basis for many of the assumptions made in the dynamic dual-economy models. This section deals with the models Ruttan has classed as dynamic.

[3] Lewis (33, p. 146). The capitalist sector is defined as "that part of the economy which uses reproducible capital and pays capitalists for the use thereof.... The subsistence sector is by difference all that part of the economy which is not using reproducible capital" (33, p. 146-147). By these definitions, the subsistence sector would include the majority of services.

modern sector and the backward or traditional sector,[1] and the industrial and agricultural sectors.[2]

The analysis of less-developed countries through the use of dual-economy models originates with the classic work of Lewis (33, 35) and has been extended by Jorgenson (23, 24, 25) and Fei and Ranis (12, 13, 14, 49).[3]

The models developed by these researchers are not reviewed in any detail. The relationship between these models and the models developed in this study will be indicated in later chapters. However three shortcomings common to the models of Lewis, Fei and Ranis, and Jorgenson will be

---

[1] Jorgenson (23, p. 311). "The economic system may be divided into two sectors --the advanced or modern sector, which we will call, somewhat inaccurately, the manufacturing sector, and the backward or traditional sector, which may suggestively be denoted agriculture."

[2] Ranis and Fei use these terms as short-hand terminology for Lewis' capitalist and subsistence sectors but "....underscore the absence of any necessary one-to-one relationship between the subsistence sector and agriculture, or between the capitalist sector and industry...." (49, p. 534). In their later work they fail to mention this qualification (12, p. 4).

[3] Ruttan (54) considers the work by Lewis to be a bridge between static and dynamic dualism. The reason for this is unclear since Lewis' model is definitely dynamic, although not rigorously and explicitly specified as the models in the works of Jorgenson and Fei and Ranis. Also, there is some question about whether Fei and Ranis or Jorgenson contribute much besides rigor to the analysis of Lewis. With rigor, however, there are inevitably more stringent simplifying assumptions, some of which are rather difficult to accept. In the words of Lewis in commenting on the work of Fei and Ranis, "The mathematics seems impeccable; it is the assumptions that are odd.... One must pay tribute to the geometrical ingenuity that makes it possible to bring so many variables into a stagnant equilibrium. But of course, the value of a model is in direct proportion to its relationship to reality" (32, pp. 159-161).

indicated. Some additional shortcomings have been discussed by Ruttan (54, 55).

Perhaps the most serious shortcoming of these models is the neglect of the intersectoral markets for factors. Only labor is considered in intersectoral factor trade. In the light of the recent green revolution in agriculture with its high productivity response to agricultural inputs such as fertilizers and chemical pesticides, ignoring intersectoral factor trade appears to be somewhat unrealistic.[1]

A second shortcoming common to these studies is the asymmetric treatment of the investment problem. All studies arrive at the conclusion that an agricultural surplus is a necessary condition for sustained development,[2] and all emphasize the contribution made by this surplus to capital accumulation. Only Fei and Ranis, however, consider the desirability of investment in the agricultural sector. This consideration is not subjected to the same rigorous analysis as investment in the industrial

---

[1] As mentioned above, Kuznets (28) and others have indicated demand for manufactured inputs is one of agriculture's "contributions" to economic development.

[2] Jorgenson (23, p. 324) and Lewis (33, p. 173). Fei and Ranis actually argue that "balanced" growth between agriculture and industry is desirable (14, p. 190). Nicholls (43) also demonstrates the importance of an agricultural surplus. It should be emphasized that all these demonstrations depend crucially on the assumption of a closed economy. Only Lewis and Nicholls, however, appear to recognize the limitation of their conclusion.

sector.[1] Given the supposed importance of the development of the agricultural sector, a reasonable pair of questions to ask seem to be the following: Should there be a net inflow of savings into the agricultural sector in the earlier (or later) stages of development? Under what conditions does investment in agriculture tend to be desirable? None of the above researchers appears to have analyzed these questions, or even posed them.[2]

The third common shortcoming of these dual-economy models is the lack of analysis of the role of the government in the developmental process. It is now widely recognized that the government's role in less-developed countries is extremely important. This is evidenced by the widespread use of development planning in an effort to speed the process of development.[3]

The next section provides a brief overview of the models developed in this study along with some of the more important conclusions of the study. The formal development of the models and accompanying arguments are reserved for the later chapters.

---

[1] Their discussions of investment in agriculture take on the appearance of an afterthought. For example, in the formal model presented on pages 28 and 29 in (12), no allowance is made for investment in agriculture. Then they suggest that, "The mutually beneficial relationship between the industrial and agricultural sectors of the dualistic economy is due to the fact that, from the viewpoint of the agricultural sector 'access to the industrial sector' stimulates agricultural productivity and from the viewpoint of the industrial sector, 'access to the agricultural sector' increases the savings fund" (12, p. 34). A logical question is to enquire how productivity is "stimulated" in the absence of any real resource demands.

[2] In a recent article, Dixit purports to demonstrate that, "Even a target of rapid industrial growth is shown to lead to balanced growth in the long run; and, if capital is very scarce at the beginning in agriculture, an initial phase of specialization of investment to agriculture is shown to be necessary (8a, p. 203).

[3] For a list of countries which have formulated national plans, see Waterston (63, Appendix III).

The Models: A Heuristic Exposition

Three distinct but closely related models are discussed in this study. For convenience, these models are referred to as the decentralized model, the centralized model, and the food aid model. The decentralized model is discussed in detail in Chapters II and III, the centralized model in Chapter IV, and the food aid model in Chapter V. In this section a heuristic description of the models is provided.

The decentralized model

The models developed in this study are more elaborate than most models used to study the development of dualistic economies. This elaborateness is a result of the emphasis placed on the investigation of intersectoral factor, product, and income flows. The investigation proceeds in terms of a closed economy.

Intersectoral factor flows of labor, capital, and manufactured goods are examined in a five sector optimizing model involving three products, agricultural goods, manufactured goods, and capital goods. Agricultural goods, which are assumed to be produced in two sectors, a subsistence and a commercial sector, are used only for consumption purposes. The agricultural goods produced by these two sectors are perfect substitutes in consumption and consequently a common price prevails for the output from these two sectors.

Capital goods are produced by the third sector in the model. Capital goods are used only as factors of production and are assumed to be infinitely durable.[1] The fourth sector in the model produces the

---

[1]That is, depreciation is not included in the model. This is only a simplifying assumption and is not necessary to the analysis. There is no reason to suspect any of the conclusions of this study would be appreciably altered by relaxing this assumption.

third product, manufactured goods, which may be used either for consumption or as nondurable factors of production.[1] Manufactured goods to be used either as factors of production or as consumer goods are assumed to be perfect substitutes in production. In other words, manufactured consumer goods and nondurable manufactured factors of production (manufactured inputs) are produced by the same firms using the "same" production processes. These firms are assumed to be indifferent between producing consumer goods or manufactured inputs which leads to a common price for manufactured consumer goods and manufactured inputs.

The fifth sector included in the model is the government sector. The government has at its disposal the instruments of government expenditure. Taxes are collected on all income. This tax revenue is used to invest in social overhead capital for agriculture or in capital accumulation in the manufacturing or capital goods sectors. The government is assumed to invest in these alternatives in a manner that tends to maximize social welfare over a finite horizon, where welfare is assumed to be a function of consumption only.

The two agricultural sectors are differentiated by both technical and institutional considerations. Production in the subsistence sector requires inputs of land, labor, and nondurable factors of production purchased from the manufacturing sector.[2] The commercial agricultural sector

---

[1] A nondurable factor of production is one which is completely used up in production during the period of purchase.

[2] For example, agricultural chemicals such as fertilizers and pesticides.

uses durable capital goods as a factor of production in addition to the factors used by the subsistence producers. These durable capital goods are purchased from the capital goods sector.[1]

At the institutional level, labor employed in the commercial agricultural sector receives a fixed wage rate. Employment is restricted so that the marginal value productivity of labor equals the wage rate. Labor employed in the subsistence sector, on the other hand, receives a residual income equal to the total value of subsistence production less the cost of the purchased manufactured inputs. Thus, labor in the subsistence sector receives a portion of the income which is actually earned by the land.[2] It is assumed that all income received by labor is consumed (including land rent in the subsistence sector), and all income earned on the capital stock is saved. The savings are used to purchase capital goods from the capital goods sector. The rent on land in the commercial agricultural sector is also saved.

---

[1] This does not include the substantial amounts of capital produced within the agricultural sectors, such as draft animals and livestock. These forms of capital are considered to be part of the "land" input. This assumption is valid only if these forms of capital are not increased in quantity during the period under consideration. These forms of capital may also be considered to be part of the land input in the subsistence sector.

[2] This is equivalent to assuming the subsistence producers are owner-operators.

For simplicity, the supply of labor is assumed to be perfectly inelastic throughout the period.[1] Labor employed by the government, in the commercial agricultural sector, manufacturing sector, or the capital goods sector receives an exogenously fixed wage rate.[2] This wage rate is assumed to be too high to allow all labor to be employed in the three advanced sectors at that wage rate since these sectors are assumed to behave competitively and all factors must earn their marginal value productivity. Any labor which is not employed in the advanced sectors finds employment in the subsistence sector where an average productivity is earned. The subsistence wage rate is assumed to be lower than the wage rate in the advanced sectors which, in effect, makes the supply of labor to the advanced sectors perfectly elastic in the initial phases of development even though the entire labor supply is assumed to be perfectly inelastic.[3]

---

[1]The implications of relaxing this assumption are investigated in Chapter VI.

[2]Various reasons for a rigid wage rate can be given. Perhaps the least objectionable and most plausible reason is that the laborers are organized in a union and restrict membership to maintain this wage rate. Other possible explanations include social legislation and unwillingness to work in other than traditional employment at a lower wage rate.

[3]As explained in the following sections, the marginal physical productivity of labor in the subsistence sector is never assumed to be zero. This appears to coincide with the evidence cited by Kao, Anschel and Eicher (26). Thus, withdrawing labor from the subsistence sector tends to reduce production in this sector and we are following Jorgenson (23) in this respect. However, a perfectly elastic labor supply curve to the advanced sectors coincides with the assumptions of Lewis (33) and Fei and Ranis (14). Jorgenson (24, 25) made an interesting attempt to test the appropriateness of the assumptions of zero versus positive marginal physical productivity of labor and concluded that, for the case of Japan, the data were consistent with a positive marginal physical productivity for labor. As Marglin (36) demonstrates, however, Jorgenson's test depends crucially on the assumption of unitary elasticity of substitution between labor and capital in the industrial sector.

The amount of land is assumed to be fixed in total supply and land cannot be transferred from one sector to the other. (These assumptions are necessary for technical reasons which are discussed in the next chapter.) While the former assumption may not be too unrealistic, the latter assumption is very restrictive in the context of the present model. By not considering the possibility of transferring land between the two sectors, the prospect of "commercializing" the subsistence sector is effectively precluded.[1]

Turning now to the manufacturing and capital goods sectors, production in both of these sectors requires inputs of capital, labor, and manufactured factors of production. These sectors are assumed to be organized rationally and all variable factors are employed to the point where their marginal value productivity equals their cost.[2] The income received by labor is consumed and all rent on capital is saved.

Time is considered in a discrete manner. The government collects taxes on all factor income. This tax revenue is used to accumulate labor intensive social overhead capital (SOC) in either of the two agricultural sectors. Alternatively, this revenue can be used to supplement the budgets of private savers who use the funds to purchase capital goods from the capital goods sector.[3] The government funds are allocated in a manner that

---

[1]The opposite possibility of "decommercializing" the commercial sector is also precluded. This, however, is of much lesser interest.

[2]Within every period, the capital stock within each of these sectors is considered a datum determined from the capital stock and investment in the preceding period.

[3]Investment in either SOC or private capital does not have any payoff until the subsequent period.

maximizes the welfare of the country over a finite horizon.[1] This welfare is described by a quadratic function of consumption of agricultural goods (food) and manufactured goods (non-food). This quadratic function approximates Engel's law in the sense that as per capita consumption increases, the relative proportion of consumer income spent on food declines.

Investment expenditures on SOC involves the hiring of labor from the subsistence sector at the same wage rate that is earned in the advanced sectors. This labor is assumed to engage in extension or similar activities which increase the productivity of the specific agricultural sector to which it is directed.[2] In other words, technical change in these two sectors is assumed to be a function of investment in SOC.[3]

Two other alternatives for government expenditures are considered in the decentralized model. These are investment in private capital in either the capital goods sector or the manufacturing goods sector. Thus, in essence, the government has a choice of investing in any one of the four sectors.

Private savings are assumed to be freely transferable among the three sectors. In other words, savings from the commercial agricultural sector can be used to accumulate capital in either the manufacturing or

---

[1] In other words, the government draws up a development plan for the next (say) 15 years.

[2] An alternative interpretation would be to assume the labor was engaging in labor intensive capital accumulation.

[3] Technical change in the capital goods and manufacturing goods sector is assumed to be exogenous and productivity increases a constant percent every year.

capital goods industries and vice versa. This is equivalent to assuming there is only one fund of savings. These savings are allocated among the three sectors in a manner that will equalize the expected marginal return in the subsequent period of the last unit spent. This allocation is made under the naive assumption that all prices and factor allocations in the subsequent period will remain unchanged. The private investors take the government investment in private capital in the manufacturing sector or capital goods sector into consideration in making their investment decisions. This could be interpreted that the government announces its investment plans before the private investors make their decisions.

Relative prices in this model are endogenously determined. It is assumed that the welfare function adequately reflects the preferences of the consumers with respect to the consumption of agricultural and manufactured commodities. If this welfare function is viewed as an aggregate utility function, combining this utility function with the aggregate consumers' budget restraint (labor income) implies a pair of aggregate final demand equations for agricultural goods and manufactured goods. These aggregate, final demand equations, combined with the derived demands for capital goods (for investment) and manufactured goods (as factors of production), interact with the aggregate supply equations for each of these goods to determine the relative prices of the goods[1]. The aggregate supply equations are derived from the assumed aggregate production functions.

---

[1]The price of manufactured goods is chosen as <u>numéraire</u>.

Given the assumptions of a fixed supply of labor and the fixed wage rate in all sectors except the subsistence sector, employment in the subsistence sector is determined as a residual. The total labor supply is assumed to be large enough relative to the level of the fixed wage rate and other resources in the advanced sectors so that the resulting wage rate in the subsistence sector is below the wage rate in the advanced sectors. In other words, the labor supply is large enough so that, with the fixed wage rate in the advanced sectors, a major proportion of the labor is employed in the subsistence sector, and the ratio of labor to other resources in the subsistence sector is such that the marginal value productivity of labor in the subsistence sector is lower than in the other sectors.

A diagrammatic representation of the expenditure and income flows in the decentralized model is presented in Figure 1.1. The five sectors are represented as rectangles and the two ovals represent the two groups of income recipients, the capital owners and the laborers. Landowners are not included as a separate class of income recipients. The rent earned on land is simply attributed to the laborers in the subsistence sector and to the capitalists in the commercial agricultural sector. The flows above the diagonal line AA' represent expenditures and those below the line represent income receipts. Expenditure flows are discussed first.

The laborers spend all their income on consumption goods. This consumption expenditure is divided between agricultural goods (P_1C_1) and manufactured goods (P_2C_2). The expenditures on agricultural goods are divided between the commercial and the subsistence agricultural sectors. Consumption expenditures by labor are the only source of revenue for the agricultural sectors. The manufacturing goods sector, on the other hand,

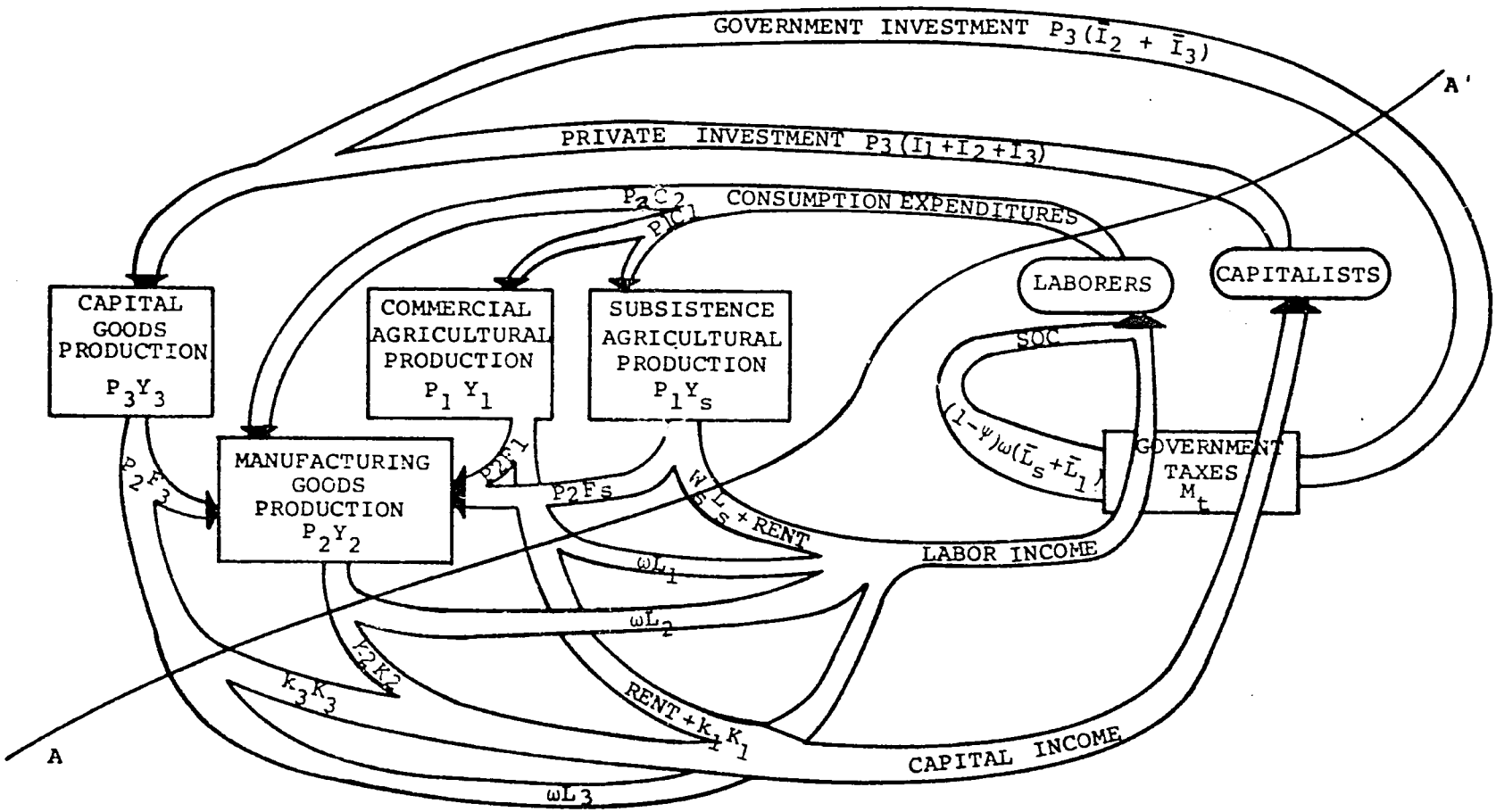

Figure 1.1. Income and expenditure flows

sells its products to the two agricultural sectors ($P_2F_1+P_2F_s$) and the capital goods sector (P_2F_3) as well as to consumers. Hence the manufacturing goods sector receives revenue from all four of these sources.

The capital goods sector sells its output (Y_3) to either the capitalists or to the government. The capitalists spend all their income on private investment goods [$P_3(I_1+I_2+I_3)$]. The government has two classes of expenditure alternatives. The tax revenue which the government collects may be spent on either SOC for the agricultural sectors in the form of wages net of taxes [$\omega(1-\Psi)(\bar{L}_s+\bar{L}_1)$] or on investment goods for the capital and manufacturing goods sectors [$P_3(\bar{I}_2+\bar{I}_3)$].[1]

Turning now to the income flows, labor receives income from all five sectors. Employment in the commercial agricultural sector (L_1), the manufacturing sector (L_2) and the capital goods sector (L_3) receives a fixed wage rate (ω). Similarly, labor employed by the government on subsistence sector SOC ($\bar{L}_s$) and commercial agricultural sector SOC ($\bar{L}_1$) receives the same wage rate. Labor employed in the subsistence (L_s) sector receives a lower wage rate (W_s). Capital owners, on the other hand, do not receive any payments from the government or subsistence agricultural sectors since capital is not used in those two sectors.

Net revenue[2] in the subsistence agricultural sector accrues to labor. Part of this net revenue is rent on the land which the laborers are presumed to own. The net revenue in the commercial agricultural sector is divided between the capitalists (who own the land in this sector) and the laborers.

---

[1]Actually the government expenditure on SOC is both an expenditure and an income receipt since the entire expenditure net of taxes accrues directly to labor.

[2]Net revenue in this section is defined as total revenue less the cost of purchased manufactured inputs and taxes.

Since no primary factors are employed in the manufacturing and capital goods sectors, the net revenue in these sectors is divided between the laborers and capitalists as wages and rent on capital stocks.

The centralized model

The centralized model differs from the decentralized model with respect to the role of the government and in the allocation of investment funds. The essential difference is that in the centralized model the government exercises complete control over the allocation of both the private savings budget and the tax revenue. Any rent accruing to capital is invested in expansion of the capital stock in the commercial agricultural sector, capital goods sector, and manufacturing goods sector. Tax revenue can be used to expand SOC in either of the agricultural sectors or to augment the private savings budget. That is, taxes can either be used to hire labor for SOC projects, or the tax revenue can be used to purchase capital goods from the capital goods sectors.

The same allocation criterion is used in the allocation of both the private savings and tax revenue. Specifically, this criterion is the maximization of welfare over the finite horizon being considered.[1]

This brief introduction to the decentralized and centralized models has been provided so that the reader can have access to the principal conclusions of this study without reading the more technical sections[2] in

---

[1]This reformulation of the model has the virtue of simplifying several very difficult technical aspects of the model as well as relaxing one very restrictive assumption regarding investment. Specifically, the equations relating to investment in the decentralized model are so complicated that they are unmanageable unless investment is assumed to take place in every sector in every time period. It is this assumption which is relaxed in the centralized model.

[2]Some readers will prefer the more rigorous presentation in the following chapters.

chapters II through VI. The major conclusions are summarized in the following section. This is followed by a separate section summarizing the analysis of food aid.

A Summary of Conclusions

The possibility for international trade is not considered in this study. However, some of the conclusions of the study appear to depend on the assumption of no foreign trade. Studying the development of an economy without considering the prospects of foreign trade tends to lead to policy conclusions based on an implicit value judgment which is frequently overlooked. Specifically, the policy recommendations often implicitly assume that self-sufficiency is desirable. In a closed-economy model, a shift in the terms of trade in favor of sector A at the expense of sector B is frequently interpreted as a signal to transfer resources to A from B thereby expanding the productive capacity in A relative to B. If international trade is considered as a possibility, the correct policy prescription may be quite different. For example, if the price of good B falls below the world market price while that of good A rises above the world market price, the best policy might be to export good B and to use the foreign exchange earnings to import good A. With this brief but important qualification, the following conclusions are enumerated as a result of this investigation.

Public investment in subsistence agriculture

In an economy with a given resource base, capital stock, level of technology, and wage-price configuration, the proportion of the labor force engaged in subsistence employment will increase as the size of the labor force increases. This is because for a given level of wages and

prices and a fixed productive capacity, only a limited number of jobs are available in advanced sectors. Thus, as the ratio of labor to resource base increases, the proportion of the labor force in the subsistence sector also increases.

It is demonstrated in the succeeding chapters that as the proportion of the labor force employed in subsistence agriculture increases it becomes relatively more important to increase the productivity of subsistence agriculture. There is no a priori reason to suggest that there should not be a net inflow of savings into the subsistence sector if the proportion of the labor force employed in this sector is large enough. Conversely, there is no reason to suggest that the subsistence agricultural sector should not be used as a source of savings to finance nonagricultural development in an economy with a different resource endowment, labor force distribution, and capital structure. Whether or not there should be a net inflow of savings into subsistence agriculture will depend on the individual country concerned and the relevant data and parameters pertaining to that country. However, the following characteristics may be itemized as relevant to the decision regarding investment in the subsistence sector.

The first and most obvious consideration is the physical productivity of the investment project. Ceteris paribus, the physically more productive an investment project, the greater is the likelihood that it will be a desirable undertaking. The productivity of a particular investment may depend crucially on one or more related investments. For example, an extension program extolling the virtues of a new crop variety may have an extremely low payoff if the necessary complementary fertilizer is not available. If the appropriate investment in providing fertilizer is also

made, the same extension program may have a very high payoff. Considerations such as these have led to advocating what has aptly been called the package approach for agricultural development.[1]

The physical productivity of an investment project is not the only consideration in investment decisions. Productivity must be weighted by an appropriate value which is placed on the output. In this study, the social value of the output[2] is used as the weighting factor in the decision criteria for allocating government funds in both the centralized and decentralized models, and in the allocation of private savings in the centralized model. However, prices are used to value the output in decisions regarding the allocation of private savings in the decentralized model. It is demonstrated for a closed economy with a given level of consumer income that both the social value and price of agricultural relative to nonagricultural output would increase as the ratio of the consumption of agricultural goods to manufactured goods declined. It is also argued that this result would not necessarily hold if the decline in the ratio of agricultural/nonagricultural goods consumption was accompanied by an increase in real income. Then the TT and social valuations will move in favor of the agricultural sector only if the rate of decline in the consumption ratio is sufficient to offset the influence of Engel's law at higher income levels. This suggests that as the economy achieves higher levels of output in both agricultural and nonagricultural production, investment in agriculture <u>might</u> become relatively

---

[1]Johnson (20). These types of externalities have not been discussed in this study.

[2]As reflected by the assumed social welfare function.

less desirable than at lower levels of output. This statement does not mean that it is not desirable to invest in agriculture at higher income levels; nor does it mean that it is desirable to invest in agriculture at lower income levels.

It is assumed that public investment in the subsistence sector involves employing labor at a higher wage rate than the labor was previously earning in the subsistence sector. If this is true, the social desirability of investing in the subsistence sector tends to increase as the disparity between the government wage rate and the subsistence wage rate increases. This conclusion involves the implicit assumption that the marginal utility of income dimishes as income increases.

The foregoing factors all affect the social benefit to be derived from an investment in subsistence agriculture. Whether this investment should be carried out depends on the size of the anticipated social benefit relative to the social opportunity cost of using the resources in this manner. This should not be confused with the criterion used in simple cost-benefit analysis where anticipated actual costs are compared with anticipated returns. Actual costs of a project may differ substantially from the opportunity costs of using the resources in this manner. Opportunity costs of resources take into consideration the possible payoffs that could be realized by these resources in all possible alternatives.

The foregoing conclusions are obtained from an analysis of the decentralized economy model. Similar results can be derived from the centralized model. The following results are obtained from the analysis of the centralized model.

Investment in subsistence versus commercial agriculture

In this section factors affecting the relative merits of investing in infrastructure in either subsistence or commercial agriculture are discussed. Throughout this investigation it is assumed that investment in social overhead capital in subsistence agriculture would have no productivity influences on the commercial agricultural sector and vice versa. This is a fairly realistic assumption for some forms of investment. For example, an irrigation system may be built to provide water for either subsistence producers or commercial producers. For some other forms of investment this is clearly an unrealistic assumption. For example, a road may be built which is used by both subsistence and commercial producers. The following conclusions are derived with the assumption that there is no complementarity between sectors in investment in social overhead capital.

Ceteris paribus, as the ratio of labor employed in subsistence agriculture to labor employed in commercial agriculture increases, investment in forms of social overhead capital specific to the subsistence sector becomes relatively more desirable. Similarly, the larger the proportion of the cultivated area that is being used in subsistence agriculture, the more desirable the investment in this sector becomes relative to investment in commercial agriculture.

The characteristic that has been used to differentiate subsistence from commercial agriculture is that commercial producers are assumed to use fixed, reproducible capital as a factor of production while subsistence producers do not. As the commercial producers accumulate more fixed capital, the social desirability of investing in social overhead capital in commercial agriculture increases relative to investing in the subsistence sector.

Investing in either commercial or subsistence sector social overhead capital in any one period tends to reduce the relative social desirability of investing in that sector in the subsequent periods. To the extent that the increased output resulting from public investment in either of these sectors tends to reduce the relative social value of agricultural production, investing in the subsistence sector in any one period will also tend to reduce the desirability of investing in commercial agriculture in subsequent periods and vice versa.

The discussion of the foregoing conclusions abstracts from the considerations of the opportunity costs of investing in social overhead capital in agriculture. These opportunity costs arise from the alternative investment possibilities for government savings. The alternative considered in this study is to invest in private capital accumulation in the commercial agricultural and nonagricultural sectors. Conclusions regarding private capital accumulation are discussed in the next section.

Private capital accumulation

The conclusions in this section are derived from the centralized model. Two interpretations of this model are possible. The first interpretation is that the government owns all of the reproducible capital stock and rents it to entrepreneurs. The rent collected is used to accumulate more capital. The second interpretation is that the capital is privately owned and the income earned by the capital-owners is used to accumulate more capital according to guidelines determined by the central planning authorities. Regardless of the interpretation, these savings are referred to as private savings (as compared to public savings out of taxes) and are allocated among investment alternatives in a manner that is consistent with maximizing welfare over the planning horizon.

The allocation of investment funds between the expansion of capacity in capital goods and consumer goods industries involves a difficult inter-temporal comparison between satisfaction to be derived from expanded present versus future consumption. Placement of capital goods in the capital goods industry requires an additional period of waiting as compared with placing these capital goods in the agricultural or manufacturing goods sectors. Higher rates of future consumption require sacrifice of current consumption. Thus, expansion of the capital goods industry is more apt to be desirable from society's standpoint if the people are not too impatient. That is, in countries where there are pressures for immediate improvements in the living standards of the people there will be reduced emphasis for expansion of the capital goods sector. Conversely, when relatively greater emphasis is placed on longer-run improvements in living standards, there will be greater social payoff to increasing capacity in the capital goods industry.

If the productivity in one particular sector increases more rapidly than in other sectors, this tends to increase the social desirability of investing in that sector provided there are no adverse terms of trade effects. This is true whether the productivity increases arise from investments in infrastructure or through the adoption of new techniques developed in advanced countries.[1]

---

[1] The latter corresponds to the exogenous improvement of productivity through disembodied technical change which is assumed to occur in the manufacturing and capital goods industries.

It is demonstrated for a closed economy that a movement of the terms of trade in favor of a particular sector indicated an expansion of productive capacity in that sector may be socially desirable. However, as indicated at the beginning of this section, if the possibility of foreign trade is considered this may be a signal that the particular commodity should be imported if sufficient foreign exchange is available.

In comparing the accumulation of labor intensive social overhead capital with the accumulation of private capital, it is argued that private capital accumulation as a means of expanding productive capacity is relatively more attractive when a relatively larger capacity to produce capital goods exists. Conversely, labor intensive social overhead capital becomes relatively more attractive as the ratio of the labor force to capital goods capacity increases. The reason for this is that as the size of the labor force or capital goods capacity increases, the social opportunity cost of using these resources tends to decrease.

Population growth and economic development

Throughout most of this study, the supply of labor is assumed to be fixed and perfectly inelastic with respect to the wage rate. It is demonstrated that relaxing the latter assumption has essentially no effect on the conclusions of the study, although the magnitudes of the impacts of some policies may be dampened. For example, an expansion of government employment would have a smaller impact on the incomes of laborers employed in the subsistence sector if the labor supply curve is assumed to be elastic rather than perfectly inelastic.

The effects of population growth depend on the magnitude of the rate of population growth relative to the size and rate of growth of the capital stock and the rate of technological improvement. If the rate of population growth is too high relative to these other factors, then, although total production may be increasing, per capita production and consumption will remain constant or decline. This underscores the importance of combining policies to control the rate of population growth with policies to promote economic development.

Some Intracountry Effects of Food Aid

One of the principal forms of commodity aid has been in the form of food. Some of the effects of food aid are analyzed in the context of a comparative static, partial equilibrium model which may be viewed as a submodel of the centralized model. Problems relating to the repayment of loans which may be associated with the aid are not considered.[1] The cases discussed correspond identically to the situation where the government of the recipient country receives an outright grant of food. However, the short-run implications of this type of aid for prices and resource allocation appear to be essentially invariant even if a debt is incurred which has to be repaid in later periods.

The impact of three alternative methods of food distribution are considered. The first and simplest of these is the case where food is given as an outright grant to the consumers. The second method analyzed is where the food is used by the government as wages-in-kind to employ labor on SOC projects. The third and final distribution method considered is where the government sells the food in the market at the prevailing

---

[1] To investigate those types of problems requires a somewhat more comprehensive model than employed in this study. Specifically, a foreign sector must be included to incorporate foreign exchange earnings.

price and then adds the revenue generated by the food sales to the general tax budget.

The intraperiod relationships among the prices and quantities of agricultural goods under the three distribution methods may be compared diagrammatically as in Figure 1.2. The demand and supply curves that would prevail in the absence of aid are represented by the curves D_o and S_o, respectively. These demand and supply schedules would result in a price of P_o and quantity consumed of Q_o.

Distributing the food aid in the form of grants results in the largest shift in the supply curve since employment in the subsistence sector remains unchanged. Thus, $S_g = S_o + A$, where S_g represents the total supply curve and S_o represents the domestic supply curve that prevails if no aid is given. Since granting the food to consumers has the effect of bolstering effective aggregate consumer income, the demand schedule shifts to the right and is represented by the curve D_g. The intersection of the resulting demand and supply curves results in a price-quantity configuration where $P_g < P_o$ and $Q_o < Q_g$. The equilibrium price with grants of aid must be lower than without aid unless the marginal propensity to consume food out of income is unity. In other words, if the recipients of the grants of aid divert some of the income they were previously spending on food to the consumption of nonfood commodities, a drop in the price of food will result.

Turning now to the work projects form of distribution, the income effect of this form of distribution is identical with the income effect of grants and $D_w = D_g$. The domestic supply curve for food will shift to the left since labor is transferred from the subsistence sector to SOC projects. However, the leftward shift in the domestic supply curve will

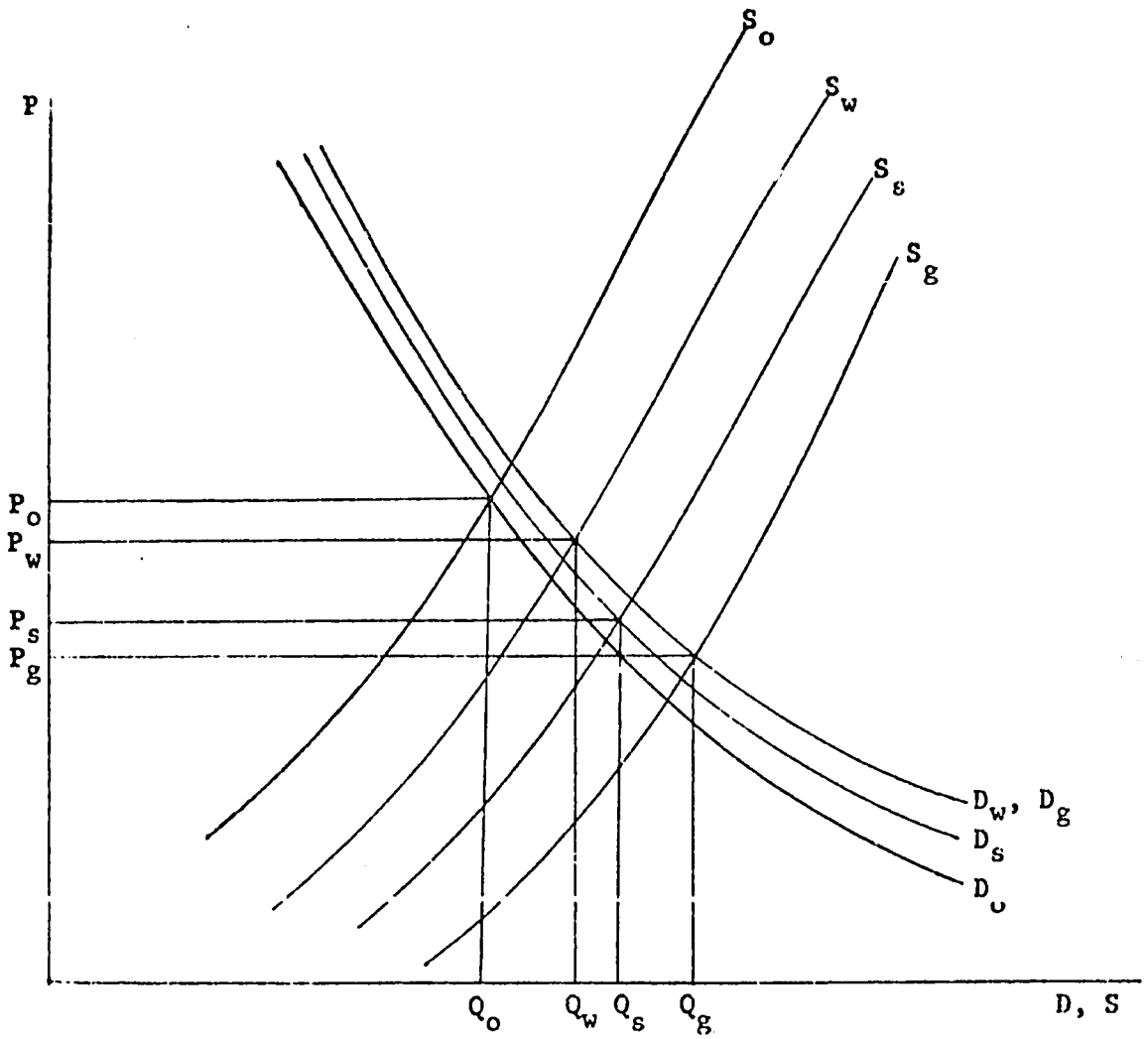

Figure 1.2 Prices and quantities of food consumed under alternative distribution methods

not be sufficient to offset the positive influence of the aid. Consequently, the equilibrium quantity consumed will be greater than the quantity that would be consumed in the absence of aid. However, the increase in quantity consumed will not be as large as the increase realized when the food is given to consumers in the form of grants. This leads to an equilibrium price-quantity relationship P_w and Q_w which has the characteristic that $P_o > P_w > P_g$ and $Q_o < Q_w < Q_g$.

Distributing the food aid through sales in the market place and using the revenue from these sales to hire subsistence labor to work on SOC projects affects the economy in exactly the same manner as if the food was distributed as wages in kind since the revenue earned from the sales is all paid out in wages. Thus, the effect on consumer income is the same as in the wages in kind distribution and exactly the same amount of labor can be hired from the subsistence sector leading to identical demand and supply shifts. However, if the revenue from government food sales is used to purchase capital goods, the domestic supply schedule for agricultural goods will shift to the left by a smaller amount than in the case of wages in kind distribution. This leftward shift is a result of the increased demand for capital goods resulting in expanded capital goods production which in turn draws labor from the subsistence sector. The demand curve does not shift as much since all the additional food must be purchased out of income earned in employment. Thus, income is augmented only to the extent that the increased purchase of capital goods bids up the price of capital and, hence, leads to increased employment in the capital goods industry where the return to labor is higher than in the subsistence sector. This income effect is smaller than that experienced with the grants or wages in kind distribution methods. Hence D_s must lie between D_o and D_w. For exactly the same reason,[1] the new supply schedule S_s must lie between S_w and S_g. The resulting equilibrium price, P_s, and quantity, Q_s, have the properties that $P_o > P_w > P_s$ and $Q_o < Q_s < Q_g$. The equilibrium magnitude of P_s

---

[1]The amount of labor removed from subsistence production is smaller if capital goods are purchased than if SOC projects are undertaken.

relative to P_g and Q_s relative to Q_w will depend on the extent of the shifts in the supply and demand schedules. It must be pointed out that these orderings may change if the labor hired in each of these situations does not come from the subsistence agricultural sector and is hired from an urban or rural pool of unemployed workers.

In summary, distributing the food through outright grants to consumers results in the largest increase in consumption and, hence, in consumer welfare. However it is not possible to say that there has been an increase in total welfare (i.e., receiving the aid is a Pareto better situation) since the food producers are worse off because of the decrease in the price of their product. Distributing food in the form of grants tends to depress the price of agricultural commodities more than if the food is used for work projects. It is not clear whether selling the food to consumers or giving it in the form of grants depresses the price of food the most. Although giving the food to consumers as an outright gift for purely humanitarian purposes has the largest consumer welfare effect within the period, the benefits derived from this form of aid are limited to the time during which the aid is being received. The other distribution methods analyzed all have a smaller immediate impact on welfare. However, since these other alternatives created resources that were used to expand capacity, some of the payoff from these methods of utilizing food aid is not forthcoming until the increased consumption possibilities are realized in later periods.

Based on the assumptions underlying this study, the use of food aid has a tendency to depress the price of agricultural goods regardless of the method of distribution. Similarly, food aid will tend to reduce the

social value of a marginal increment of agricultural expansion. If a country was assured of receiving a certain amount of food aid for several periods and the government anticipated this aid in formulating its development plan, the incentive to expand the productive capacity of the agricultural sectors would be somewhat less than if no food aid was anticipated. If the food aid terminated unexpectedly, the economy would probably have a somewhat different capital structure than if the termination of aid was foreseen. This suggests that if an economy begins to rely on and to expect food aid, the economic incentives to develop the agricultural sectors are reduced. One way to insure that some development of these sectors does occur is to stipulate that the food must be used on work projects designed to assist in the development of agriculture. For example, the food could be used to develop an irrigation system or a rural road system to facilitate the marketing of produce.

This completes the non technical discussion of the model and the principal conclusions. The next two chapters deal with the decentralized model. This is followed by a discussion of the centralized model in Chapter IV.

CHAPTER II. THE DECENTRALIZED MODEL

In this chapter, the decentralized model is introduced. We begin by introducing some notation which is adhered to through the next three chapters. Some new notation is defined in Chapter V when the partial equilibrium, food-aid model is introduced.

Notation

Throughout this study, the following convention on notation is used. All variables are denoted by upper case Latin letters. Lower case Latin letters and Arabic numerals are subscripts either on variables or parameters. Parameters are denoted by Greek letters. All parameters, indexes and variables are nonnegative unless otherwise indicated. Subscripts on variables refer to the following:

s = subsistence agricultural sector.

1 = commercial agricultural sector.

2 = manufacturing sector.

3 = capital goods sector.

t = time period (discrete).

The variables are defined as follows:

Y_{it} = production of good i, (i = s, 1, 2, 3).

F_{it} = use of manufactured goods (originating from sector 2) as a factor of production in sector i, (i = s, 1, 2, 3).

C_{it} = consumption of good i, where i = 1 denotes agricultures goods and i = 2 denotes manufactured goods.

K_{it} = capital stock in sector i available for production during period t, (i = 1, 2, 3).

L_{it} = labor employed in sector i, (i = s, 1, 2, 3).

$\bar{L}_{it}$ = labor employed by the government in the accumulation of social overhead capital (SOC) in sector i, (i = s, 1).

P_{it} = price of good i, (i = 1, 2, 3) and $P_s = P_1$.

I_{it} = private capital accumulation in sector i, (i = 1, 2, 3).

$\bar{I}_{it}$ = public or government capital accumulation in sector i, (i = 2, 3).

G_{it} = level of SOC in sector i, (i = s, 1).

E_{it} = government expenditure in sector i, (i = s, 1, 2, 3).

B_i = amount of land in sector i, (i = s, 1).

M_t = tax receipts in period t.

Z_{it} = Lagrangean multiplier corresponding to the i-th constraint in period t.

The parameters are defined as follows:

μ_1, μ_2, μ_{11}, μ_{12}, μ_{21}, and μ_{22} are parameters of the quadratic welfare function and will be discussed in detail below.

σ_i = "intercepts" of the Cobb-Douglas form of production function sector i, (i = s, 1, 2, 3).

λ = "elasticity of production" of SOC in the agricultural sectors.

ω = institutionally fixed wage rate in terms of manufactured goods.

α_j = elasticity of production of factor j, sector s, (j = 1, 2, 4).

β_j = elasticity of production of factor j, sector 1, (j = 1, 2, 3, 4).

γ_j = elasticity of production of factor j, sector 2, (j = 1, 2, 3).

δ_j = elasticity of production of factor j, sector 3, (j = 1, 2, 3), where j = 1 refers to manufactured inputs, j = 2 refers to labor inputs, j = 3 refers to capital inputs, and j = 4 refers to land inputs.

τ = terminal period of the plan (i.e., t = 0, 1,..., τ).

ϵ = exogenous rate of technological change in the manufacturing and capital goods sectors.

ψ = marginal (= average) tax rate.

ρ = social discount rate on welfare.

The foregoing notation refers to the decentralized model. Some modifications and additional variables are introduced with the centralized model in Chapter IV. With the aid of this notation, the formal model is introduced and the various assumptions are discussed. The nature of the welfare function is considered in the following section.

The Welfare Function

Welfare in any one period is considered to be a quadratic function of aggregate consumption of manufactured and agricultural goods.[1] It is assumed that the objective of the government is to maximize this welfare function over a finite horizon of τ periods, with welfare in future periods discounted to the present at the constant rate. That is, the objective is to maximize

$$V = \sum_{t=1}^{\tau} (\mu_1 C_{1t} + \mu_2 C_{2t} - \mu_{11} C_{1t}^2 + \mu_{12} C_{1t} C_{2t} - \mu_{22} C_{2t}^2)(1 + \rho)^{-t} \quad (2.1)$$

This welfare function is assumed to have the following characteristics. In any period t, the marginal welfare of increased consumption is positive;

$$\frac{\partial V}{\partial C_{1t}} = (\mu_1 - 2\mu_{11} C_{1t} + \mu_{12} C_{2t})(1 + \rho)^{-t} > 0, \quad (2.2)$$

and

$$\frac{\partial V}{\partial C_{2t}} = (\mu_2 + \mu_{12} C_{1t} - 2\mu_{22} C_{2t})(1 + \rho)^{-t} > 0. \quad (2.3)$$

---

[1] Since the labor force (and population) is assumed to be constant, by virtue of the nature of the product and income distribution assumptions, this is equivalent to maximizing a weighted average per capita consumption, where all subsistence employees consume at one rate and all advanced sector employees consume at another (higher) rate. The weights in the average are the proportions of the labor force employed in the subsistence and advanced sectors.

Without loss of generality, consumption units can be chosen so that $C_{10} = C_{20} = 1$. The relative magnitudes of the various parameters of V are assumed to be such that $\mu_1 - 2\mu_{11} + \mu_{12} > \mu_2 + \mu_{12} - 2\mu_{22}$. That is, in the initial period a marginal increment in food consumption will contribute more to welfare than a similar increment in nonfood consumption. It is further assumed that $\mu_1 > \mu_2$ and $2\mu_{11} > 2\mu_{22} > \mu_{12} > 0$. This implies that $\partial^2 V/\partial C_{it}^2 = -2\mu_{11} < \partial^2 V/\partial C_{2t}^2 = -2\mu_{22} < 0$. That is, the marginal welfare obtained from additional increments of food decreases at a more rapid rate than marginal welfare from additional units of nonfood consumption. The foregoing assumptions also imply that agricultural and manufactured goods are complementary in consumption and that the welfare function is negative definite.

Every negative definite quadratic form has an unconstrained maximum which is defined by the first order conditions. In the case of (2.1), the values of the variables C_1 and C_2 at the optimum are given by setting (2.2) and (2.3) equal to zero and solving. The unconstrained maximum is given by the system

$$\begin{bmatrix} C_1 \\ C_2 \end{bmatrix} = \frac{1}{D} \begin{bmatrix} -2\mu_{22} & -\mu_{12} \\ -\mu_{12} & -2\mu_{11} \end{bmatrix} \begin{bmatrix} -\mu_1 \\ -\mu_2 \end{bmatrix}, \tag{2.4}$$

where $D = 4\mu_{11}\mu_{22} - \mu_{12}^2 > 0$. It can readily be shown that $C_2 > C_1$ given the assumption that $\mu_1/\mu_2 < (2\mu_{11} - \mu_{12})/(2\mu_{22} - \mu_{12})$ in addition to the assumptions listed above.[1] This implies that at the "saturation point"

[1]From (2.4) we have $DC_1 = 2\mu_{22}\mu_1 + \mu_{12}\mu_2$ and $DC_2 = \mu_{12}\mu_1 + 2\mu_{11}\mu_2$. Differencing and collecting terms we get $(DC_1 - DC_2) = \mu_1(2\mu_{22} - \mu_{12}) - \mu_2(2\mu_{11} - \mu_{12})$. Dividing by the positive quantity $\mu_2(2\mu_{22} - \mu_{12})$ we see that $(DC_1 - DC_2)/\mu_2(2\mu_{22} - \mu_{12}) = \mu_1/\mu_2 - (2\mu_{11} - \mu_{12})/(2\mu_{22} - \mu_{12}) < 0$.

consumers prefer relatively more manufactured goods than at the initial income levels.

Isowelfare lines corresponding to a quadratic form in which the parameters satisfy the foregoing assumptions would exhibit the general shape represented in Figure 2.1. The maximum occurs at the point denoted A. In the initial period, consumers would be consuming one unit of each good and the terms of trade (TT) implied by the isowelfare curve at that point would be

$$-\frac{dC_1}{dC_2} = \frac{\mu_2 - 2\mu_{22} + \mu_{12}}{\mu_1 - 2\mu_{11} + \mu_{12}} < 1. \tag{2.5}$$

Moving along the ray OR would tend to move the TT against the agricultural sector since $0 < \partial^2 V/\partial C_{1t}^2 < \partial^2 V/\partial C_{2t}^2$. This suggests if the consumers whose preferences are being represented by this welfare function were to be confronted by equiproportionately more of each good, they would tend to bid the price of agricultural goods down relative to manufactured goods. This is in keeping with Engel's law which states that consumers tend to spend a higher proportion of their income on nonfood (nonagricultural) items as their level of real income increases.

The maximum point, A, is assumed to be unattainable within the finite horizon. In other words, it is assumed that the economy is at such a low level of productive capacity in the initial period that within the τ planning periods there will not be sufficient expansion in capacity forthcoming to produce the quantities of C_1 and C_2 indicated by (2.4).

Having discussed the maximand, we now turn to the constraints on the system beginning with the sectoral production functions.

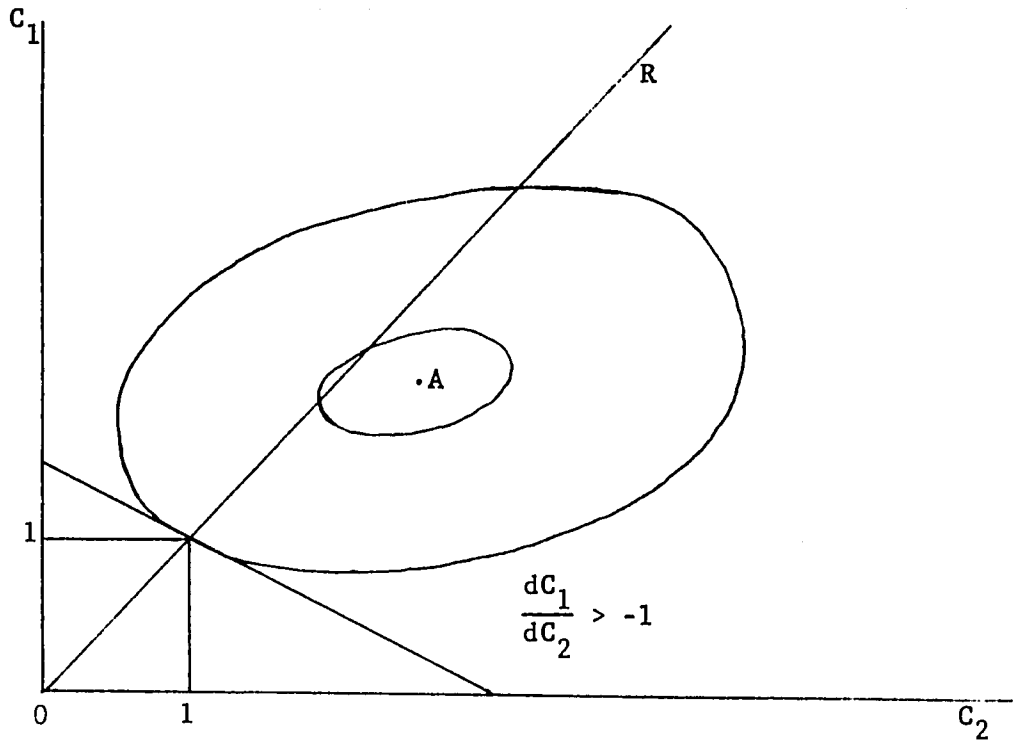

Figure 2.1. Isowelfare curves and implied terms of trade

The Production Functions

The production process in each sector is assumed to be defined by a Cobb-Douglas form of production function. Output from the subsistence sector in period t is given by

$$Y_{st} = \bar{\sigma}_s G_{st}^{\lambda} F_{st}^{\alpha_1} L_{st}^{\alpha_2} B_s^{\alpha_4}. \tag{2.6}$$

Land input, denoted by B_s, is assumed to be fixed throughout the period.[1] Labor (L_s), purchased inputs (F_s), and social overhead capital (SOC) G_s, are all variable. Purchased inputs include such items as fertilizers, insecticides, and any other items purchased from the industrial sector.

[1] Since land is fixed throughout the period, notation may be simplified by defining a new intercept $\sigma_s = \bar{\sigma}_s B_s^{\alpha_4}$.

Labor is measured in terms of man years and as such is "productively" employed in the sense that withdrawing labor from this sector would reduce output if all other factors remained at their previous levels. The SOC variable is explained in detail below.

The production process in the commercial agricultural sector differs from that in the subsistence sector since capital is used as a factor of production. Specifically,

$$Y_{1t} = \bar{\sigma}_1 G_{1t}^{\lambda} F_{1t}^{\beta_1} L_{1t}^{\beta_2} K_{1t}^{\beta_3} B_1^{\beta_4}. \tag{2.7}$$

As in the subsistence sector, land is fixed[1] while other factors are variable.

We make the following specific assumptions about the production functions in the agricultural sectors: (A) $\Sigma\alpha_i = 1$; (B) $\Sigma\beta_i = 1$; (C) $\alpha_1 = \beta_1$; (D) $\alpha_2 < \beta_2$; (E) $\lambda < \beta_4$. Assumptions (A) and (B) imply constant returns to scale prevail if all the conventional factors (land, labor, capital and manufactured inputs) are varied proportionately. Assumption (C) indicates the elasticities of production with respect to manufactured inputs are equal between the two sectors, while (D) indicates the elasticity of production of labor in the subsistence sector is less than in the commercial agricultural sector.[2] Assumptions (A) - (D) imply that $\alpha_4 > \beta_3 + \beta_4$, which suggests that the elasticity of production of

---

[1] A new intercept is defined as $\sigma_1 = \bar{\sigma}_1 B_1^{\beta_4}$.

[2] Since labor is combined with capital in the commercial sector, a small change in labor input has a larger output response in sector 1 than a small change in labor input in sector s.

land in the s sector is greater than the combined elasticity of production of capital and land in the commercial sector.[1] Assumption (E) implies that, since land is not variable, diminishing marginal productivity of nonland resources are evident in agricultural production even if investment is made in SOC.[2]

The production process in the manufacturing and capital goods sectors is assumed to differ from production in the agricultural sectors since no primary or fixed factors are involved and technology improves at a constant exogenous rate of 100ε percent per year. Specifically, the production function for manufacturing goods is denoted as

$$Y_{2t} = (1 + \varepsilon)^t \sigma_2 F_{2t}^{\gamma_1} L_{2t}^{\gamma_2} K_{2t}^{\gamma_3}, \tag{2.8}$$

and that for capital goods is represented as

$$Y_{3t} = (1 + \varepsilon)^t \sigma_3 F_{3t}^{\delta_1} L_{3t}^{\delta_2} K_{3t}^{\delta_3}. \tag{2.9}$$

Thus, production in the manufacturing and capital goods sectors is assumed to be a function of manufactured inputs, labor, and capital inputs. Both of these sectors use their own output in production.

The next set of constraints to be discussed are the constraints on factor availabilities. Before these constraints can be adequately explained, it will be necessary to digress briefly and discuss the role

---

[1] This is because land is more intensively cultivated in the subsistence sector.

[2] Since $\alpha_4 > \beta_4$, this applies to sector s as well as sector 1. If $\lambda > \beta_4$ or if $\lambda > \alpha_4$, this would permit increasing returns to scale which would, in effect, lead to problems of nonconvexity. It is for this reason that land resources are kept fixed (that is, to maintain convexity). Transferring land from one sector to the other would also lead to nonconvexity problems.

of the government sector in the decentralized model. In the following section the various types of government expenditures are explained. That section is followed by a continued discussion of the constraints.

Government Expenditures and SOC

In every period, the government collects taxes on all income at a constant average and marginal rate, ψ. Thus, tax receipts in every period, denoted as M_t are proportional to income.[1] Initially, government expenditures are assumed to equal tax receipts in every period. That is, no provision is made for foreign aid, deficit financing, or surplus budgets.[2] The government has four expenditure alternatives (denoted E_{it}), one relating to each sector. Thus we have $\sum_i E_{it} = M_t$.

Expenditure in the agricultural sectors is used to accumulate SOC, which is accomplished by hiring labor at a fixed wage rate, ω. Thus we have $E_{it} = \omega \bar{L}_{it}$, $(i = s, 1)$. This labor engages in various extension activities, educational programs, and other activities which have the effect of increasing productivity in the agricultural sectors. An alternative interpretation would be for this labor to engage in labor intensive capital accumulation, such as building a road, dam, or irrigation system using labor as the only significant input.[3]

---

[1] The assumption of a constant marginal and average tax rate is not a necessary assumption. The tax rate could actually be considered as an instrumental variable.

[2] The effect of foreign aid is analyzed with the centralized model in Chapter V.

[3] Labor intensive capital accumulation is also assumed by Lewis (33, p. 161) in his discussion of capital accumulation by means of monetary expansion.

Labor employed in these activities is specific to either the commercial or the subsistence agricultural sector. Thus, the government is confronted with a choice among investing in none, one, or both of these sectors. SOC in these sectors is defined in terms of "accumulated man-hours". That is

$$G_{st} = \bar{G}_{s1} + \sum_{i=1}^{t-1} \bar{L}_{si}, \tag{2.10}$$

and

$$G_{1t} = \bar{G}_{11} + \sum_{i=1}^{t-1} \bar{L}_{1i}, \tag{2.11}$$

where $\bar{G}_{i1}$ (i = s, 1) is an index of the level of SOC available to these sectors in the initial period. In essence, (2.10) and (2.11) suggest that the level of SOC is cumulative and if an investment in extension activities is made in period t, the payoff from this investment is not realized until period t + 1, but once this investment is made the payoff is forthcoming in all subsequent periods. This means that once a new technique is learned it is not forgotten, or a dam that is built by government labor is infinitely durable (that is, it does not depreciate).

Two other alternatives of a somewhat different nature are available to the government. These alternatives are to invest in capital accumulation in either the manufacturing or the capital goods sector. To invest in the manufacturing goods sector, the government must purchase investment goods at the market price,[1] P_{3t}, and the amount spent on government investment in sector 2 is $E_{2t} = P_{3t}\bar{I}_{2t}$. These investment goods are combined with

---

[1] Price determination is discussed in a subsequent section.

the capital stock[1] available during period t in sector 2 and used in production in period t + 1. Government expenditure on capital accumulation in the capital goods sector is similar with $E_{3t} = P_{3t}\bar{I}_{3t}$.

The essence of these four alternatives is to provide the government a choice regarding investment. In the two agricultural sectors, technological change is a function of government investment in SOC. This investment tends to offset the diminishing marginal productivity resulting from the fixed amounts of land by acting like an "additional factor". If a decision is made to expand agricultural output via public investment, the government must decide whether to invest in the commercial sector, the subsistence sector, or both. To provide the government with a legitimate choice, however, there must be an alternative means of utilization for government funds which will also contribute to welfare. If the government chooses to invest in manufacturing goods, this would tend to have both direct and indirect effects on welfare since more manufacturing output would become available for consumption (direct effect) and more would become available for use as a factor of production in all sectors (indirect effect). Investment in the capital goods sector would have its payoff only in terms of increased productive capacity in the capital goods industry in the subsequent period, and this increased capacity must be transferred to either the commercial agricultural or the manufacturing goods sector before any payoff in welfare is realized since capital goods are not consumed. Thus, if the government invests in capacity expansion

[1] Government investment is not the only source of capital accumulation in the manufacturing and capital goods sectors. Private capital accumulation is discussed below.

in capital goods capacity, there is a lag of two periods before there is any payoff, whereas in all other sectors there is a lag of only one period. Also, if the government chooses to invest in SOC, there is the added payoff of job creation. This payoff is felt during the current period.

This completes the disgression on government expenditures. Tax receipts are discussed below. In the next section, factor availabilities to the various sectors are discussed.

Factor Availabilities

Land

Land is assumed to be available in fixed amounts to the two agricultural sectors and there is no provision in the model to transfer land between the subsistence and commercial sector. The no-transfer provision effectively excludes the possibility of "commercializing" the subsistence sector by permitting land to be transferred to the commercial sector.[1] This is a very restrictive assumption and precludes certain important aspects of alternative developmental possibilities. The reason for not considering the possibility of transferring land is that this would have introduced problems of nonconvexity because agricultural production could then realize increasing returns to scale.

---

[1] The opposite possibility is also excluded but the alternative of "decommercializing" agriculture is of much lesser interest.

Labor and wage rates

The total labor supply (L_o) is assumed to be perfectly inelastic. Labor is mobile among the sectors and all labor is employed. Thus,

$$L_o = \bar{L}_{st} + \bar{L}_{1t} + L_{st} + L_{1t} + L_{2t} + L_{3t}. \tag{2.12}$$

The wage rate is assumed to be sticky in a downward direction in all sectors except the subsistence sector. In other words, labor receives a fixed wage rate, ω, in all forms of employment except subsistence agriculture.[1] This wage may be rigid in a downward direction because of labor unions, unwillingness of laborers to work in these sectors at a lower rate of pay, or because of historical precedent. All labor employed in the advanced sectors is paid its marginal value productivity in employment. Any laborer that cannot find a job in the advanced sectors at this fixed wage rate is employed in the subsistence sector. It is assumed that there are not enough jobs in the advanced sector to permit all labor to earn the wage rate ω and consequently there is "surplus labor" in the economy with the result that the marginal value productivity of labor in the subsistence sector is less than ω. This results in a perfectly elastic supply of labor to the advanced sector at a fixed real wage rate. This situation prevails until so much labor is withdrawn from the subsistence sector that the marginal productivity of labor in the subsistence sector increases sufficiently to force up the real wage rate in the advanced sectors.[2]

---

[1]These wage rates are measured in terms of manufactured consumer goods.

[2]Subsistence labor income is discussed in detail in a later section. Todaro (61) suggests that in many less-developed countries, labor tends to migrate to urban centers even though there aren't any jobs available.

Manufactured inputs

The output of the manufacturing sector may be used either for consumption or as a factor of production in other sectors. This is expressed as

$$Y_{2t} = F_{st} + F_{1t} + F_{2t} + F_{3t} + C_{2t}. \tag{2.13}$$

Capital stocks

In the initial period of the program a given stock of capital is available in all three advanced sectors. This initial capital stock (denoted $\bar{K}_{11}$, $\bar{K}_{21}$ and $\bar{K}_{31}$) may be augmented in subsequent periods through investment which involves the purchase of capital goods from the capital goods sector. Once capital is placed in a specific sector it is not transferrable to other sectors. Capital goods placed in the manufacturing goods sector is equally productive in all lines of production in that sector. Finally, capital is assumed to be infinitely durable.[1]

Since depreciation is being ignored, capital available in period t is the sum of the initial capital stock and the investments of all previous periods. Since the only source of investment funds in the commercial agricultural sector is from private savings, the capital stock in period t may be represented as

$$K_{1t} = \bar{K}_{11} + \sum_{i=1}^{t-1} I_{1i}. \tag{2.14}$$

Two sources of investment funds (public and private savings) are available for capital accumulation in the manufacturing and capital goods sectors.

---

[1] This is not a necessary assumption.

Thus, for the manufacturing sector

$$K_{2t} = \bar{K}_{21} + \sum_{i=1}^{t-1} (I_{2i} + \bar{I}_{2i}), \tag{2.15}$$

and for the capital goods sector

$$K_{3t} = \bar{K}_{31} + \sum_{i=1}^{t-1} (I_{3i} + \bar{I}_{3i}). \tag{2.16}$$

Since the economy is assumed to be closed, investment goods must be purchased from the capital goods sector which has a limited production capacity. This capacity constraint is denoted as

$$Y_{3t} = I_{1t} + I_{2t} + I_{3t} + \bar{I}_{2t} + \bar{I}_{3t}. \tag{2.17}$$

In addition to this constraint on the supply of capital goods, there is also a limited supply of savings which can be utilized to purchases these capital goods. This restriction is discussed in the next section along with wages and income distribution.

Income Distribution and Flows

In this section prices and outputs are assumed to be fixed. The government collects taxes at a constant average and marginal rate, ψ, on all income earned by land, labor and capital goods. This is equivalent to taxing government employees and all output net of payments for manufactured inputs. Thus, tax revenue may be denoted as

$$M_t = \psi \{P_{1t}Y_{st} (1 - \alpha_1) + P_{1t}Y_{1t} (1 - \beta_1) + P_{2t}Y_{2t} (1 - \gamma_1) + P_{3t}Y_{3t} (1 - \delta_1) + \omega(\bar{L}_{st} + \bar{L}_{1t})\}. \tag{2.18}$$

The distribution of this revenue among the four government alternatives,

E_{it}, is discussed above, while the discussion of the determination of the levels of the four uses is deferred until a later section.

In each of the private sectors, net income after taxes is completely distributed among the factors of production. Labor is assumed to consume all its income while all the income earned on capital is saved.[1]

Subsistence sector

The subsistence sector, like all the other private sectors in this model, purchases manufactured inputs at the market price. Since manufactured inputs are assumed to be perfectly divisible, these factors are employed at a level such that MVP equals cost, or

$$\alpha_1 P_{1t} Y_{st} = P_{st} F_{st}. \tag{2.19}$$

The remaining income in this sector is attributed to labor which consumes all of its income after paying taxes. Thus, net labor income in the subsistence sector is denoted as

$$(1 - \psi)(1 - \alpha_1) P_{1t} Y_{st} = (1 - \psi)(\alpha_2 + \alpha_4) P_{1t} Y_{st}, \tag{2.20}$$

where α_2 and α_4 indicate the constant shares of output earned by labor and land respectively. Assuming that the income earned by the land is consumed by the peasant operators is equivalent to assuming the peasants own the land they are farming and that these subsistence operators do not

---

[1] This is a stronger assumption than Lewis employs. Lewis allows for some leakage from income accruing to capital (33, p. 169). Fei and Ranis, on the other hand, assume all income on capital is saved and some additional savings are forthcoming from the agricultural sector where no capital is being used (12, pp. 29-34). Jorgenson (23, p. 326) assumes that all wages are consumed and all income earned on capital is saved. Only Lewis considers public savings. As mentioned above, the constant marginal and average tax rate is not a necessary assumption.

save. An alternative interpretation is that the landlord fails to collect any rent.

By assumption we have

$$(\alpha_2 + \alpha_4)\ P_{1t}Y_{st} < \omega\ L_{st}, \tag{2.21}$$

and it is this assumption along with the assumption of labor mobility which results in a perfectly elastic labor supply to the advanced sectors.

Commercial agriculture

Production in sector 1 differs from that in sector s inasmuch as capital is used as a factor of production. This capital stock earns its marginal value productivity in every period as do all the other factors of production. Labor must be hired at a constant wage rate ω and manufactured inputs must be purchased. Land in the commercial sector is assumed to be owned by the capitalists, or, alternatively, the capital may be assumed to be owned by the landlords.[1] This leads to the income distribution relations for manufactured inputs

$$\beta_1 P_{1t}Y_{1t} = P_{2t}F_{1t}, \tag{2.22}$$

labor

$$\beta_2 P_{1t}Y_{1t} = L_{1t}\ \omega, \tag{2.23}$$

and capitalists (or landlords)

$$(\beta_3 + \beta_4)P_{1t}Y_{1t} = k_{1t}K_{1t} + b_{1t}B_1, \tag{2.24}$$

---

[1] The term capitalist is used as an abbreviation for "owner of capital stock". The term capitalist does not necessarily imply private ownership in the sense that individuals must own the capital. However, private ownership is perhaps the most meaningful interpretation for the decentralized model.

where k_{1t} and b_{1t} denote the rate of return on capital and land respectively.

Manufacturing and capital goods sectors

Income distribution in the manufacturing goods sector is similar to that in capital goods sector with only the coefficients differing. Since manufactured goods are used as an input in the production of manufactured goods, we have the requirements that the MPP equals one, or

$$\gamma_1 P_{2t} Y_{2t} = P_{2t} F_{2t}. \tag{2.25}$$

For labor we have

$$\gamma_2 P_{2t} Y_{2t} = \omega L_{2t}, \tag{2.26}$$

and the capital owners receive the income earned on capital, which is denoted as

$$\gamma_3 P_{2t} Y_{2t} = k_{2t} K_{2t}, \tag{2.27}$$

where k_{2t} represents the MVP of capital.

In the capital goods sector, for manufactured inputs and labor we have

$$\delta_1 P_{3t} Y_{3t} = P_{2t} F_{3t}, \tag{2.28}$$

and

$$\delta_2 P_{3t} Y_{3t} = \omega L_{3t}. \tag{2.29}$$

The income accruing to the capital owners is

$$\delta_3 P_{3t} Y_{3t} = k_{3t} K_{3t}, \tag{2.30}$$

where k_{3t} is the MVP of capital.

Labor income and consumption restraints

It is assumed that all the income earned by labor is entirely spent on consumption of agricultural and manufactured goods. The only savings from this income source is via government savings out of the taxes collected from labor. Since the capitalists save all their income, the aggregate consumers budget restraint may be represented as

$$P_{1t}C_{1t} + P_{2t}C_{2t} = (1 - \Psi)\{(\alpha_2 + \alpha_4)Y_{st}P_{1t} + \beta_2 Y_{1t}P_{1t} + \gamma_2 Y_{2t}P_{2t} + \delta_2 Y_{3t}P_{3t} + \omega(\bar{L}_{st} + \bar{L}_{1t})\}. \tag{2.31}$$

In addition to this budget constraint, it is required that consumption in any period of the plan not fall below the level attained in preplan period, which may be expressed as

$$C_{1t} \geq 1 \tag{2.32}$$

and

$$C_{2t} \geq 1. \tag{2.33}$$

A final constraint on consumption is the requirement that the consumption of agricultural goods not exceed production,[1]

$$C_{1t} = Y_{st} + Y_{1t}. \tag{2.34}$$

This completes the discussion of the determination and disposition of labor income. The income earned by the capitalists is used to accumulate more capital. The allocation of these funds among the alternatives is somewhat more complicated and is discussed in the following section.

---

[1] A similar constraint applies to the consumption of manufactured goods and is given as (2.13).

Private Investment

The determination of investment behavior has been a topic of much discussion and controversy in economics. Since it is not the purpose of this investigation to enter into this controversy, a set of simplifying assumptions are used to specify the investment decisions of the capitalists.

In every period, the capitalists receive a return or rent from the use of their capital stock in production. This rent is used to accumulate more capital by the purchase of investment goods from the capital goods industry. This leads to an overall budget constraint of the form

$$(1 - \Psi)\{(\beta_3 + \beta_4)P_{1t}Y_{1t} + \gamma_3 P_{2t}Y_{2t} + \delta_3 P_{3t}Y_{3t}\}$$
$$= P_{3t}(I_{1t} + I_{2t} + I_{3t}). \qquad (2.35)$$

Equation (2.35) requires the value of private savings to equal the value of private investment.

Any investment goods purchased in period t cannot be used in production until period t + 1. It is assumed that the capitalists allocate investment goods among the three sectors in such a manner such that they maximize the expected return they will receive from their capital stocks in period t + 1. It is further assumed that the capitalists expect all prices and factor allocations in the subsequent periods to remain unchanged. However, these private investors take full account of government investment in either SOC in the agricultural sectors or in "private" capital in the manufacturing or capital goods sectors. In addition, the investors take into account the exogenous technical change which occurs in the manufacturing and capital goods sectors.

Symbolically, the capitalists attempt to maximize expected or anticipated revenue

$$R = (\beta_3 + \beta_4)P_{1t}G_{1t}^{\lambda}\sigma_1 F_{1t}^{\beta_1}L_{1t}^{\beta_2}(K_{1t} + I_{1t})^{\beta_3} + \gamma_3(1 + \varepsilon)^T\sigma_2 F_{2t}^{\gamma_1}L_{2t}^{\gamma_2}(K_{2t} + \bar{I}_{2t} + I_{2t})^{\gamma_3} + \delta_3 P_{3t}(1 + \varepsilon)^T\sigma_3 F_{3t}^{\delta}L_{3t}^{\delta}(K_{3t} + \bar{I}_{3t} + I_{3t})^{\delta_3}, \tag{2.36}$$

where $T = t + 1$.

This must be maximized subject to the budget constraint (2.35) and the requirement that investment in any sector must be nonnegative (that is, disinvestment is not allowed). Formulating this as a constrained maximum problem by introducing an undetermined Lagrangean multiplier, Z, and applying the Kuhn-Tucker conditions (27), the following first order conditions result:

$$\frac{\partial R}{\partial I_{1t}} = A_{1t}(K_{1t} + I_{1t})^{\beta_3 - 1} - ZP_{3t} \leq 0;$$

$$I_{1t}\frac{\partial R}{\partial I_{1t}} = 0;\ I_{1t} \geq 0; \tag{2.37}$$

$$\frac{\partial R}{\partial I_{2t}} = A_{2t}(K_{2t} + \bar{I}_{2t} + I_{2t})^{\gamma_3 - 1} - ZP_{3t} \leq 0;$$

$$I_{2t}\frac{\partial R}{\partial I_{2t}} = 0;\ I_{2t} \geq 0; \tag{2.38}$$

$$\frac{\partial R}{\partial I_{3t}} = A_{3t}(K_{3t} + \bar{I}_{3t} + I_{3t})^{\delta_3 - 1} - ZP_{3t} \leq 0;$$

$$I_{3t}\frac{\partial R}{\partial I_{3t}} = 0;\ I_{3t} \geq 0; \tag{2.39}$$

where

$$A_{1t} = \beta_3(\beta_3 + \beta_4)P_{1t}G_{1T}^{\lambda}\sigma_1 F_{1t}^{\beta_1}L_{1t}^{\beta_2}, \tag{2.40}$$

$$A_{2t} = \gamma_3^2 P_{2t}(1 + \varepsilon)^T \sigma_2 F_{2t}^{\gamma_1} L_{2t}^{\gamma_2}, \tag{2.41}$$

and

$$A_{3t} = \delta_3^2 P_{3t}(1 + \varepsilon)^T \sigma_3 F_{3t}^{\delta_1} L_{3t}^{\delta_2}. \tag{2.42}$$

Conditions (2.37) - (2.39) along with the budget constraint (2.35) will, at least in principle, define values of I_{1t}, I_{2t} and I_{3t} that will maximize expected revenue for the capitalists. If we make the additional, highly-restrictive assumption that I_{1t}, I_{2t} and I_{3t} are positive in all periods, these first order conditions simplify considerably to the following two equations:

$$A_{3t}(K_{3t} + \bar{I}_{3t} + I_{3t})^{\delta_3 - 1} = A_{2t}(K_{2t} + \bar{I}_{2t} + I_{2t})^{\gamma_3 - 1} \tag{2.43}$$

and

$$A_{1t}(K_{1t} + I_{1t})^{\beta_3 - 1} = A_{2t}(K_{2t} + \bar{I}_{2t} + I_{2t})^{\gamma_3 - 1} \tag{2.44}$$

Equations (2.43) and (2.44), along with the budget constraint (2.35) will define optimum levels of investment in each of the three sectors.

At this point it is necessary to digress briefly to elaborate on the implications of the assumption that I_{it} is positive in all sectors. Equations (2.43) and (2.44) suggest the capitalists allocate their investment funds in such a manner that the capitalist's share of the marginal value of additional expected revenue is equal in all three sectors. In effect this means that in each period the capitalists have sufficient investment funds to attain an equilibrium. The much less restrictive investment criteria elaborated in conditions (2.37) - (2.39) indicate that the capitalists invest in the most profitable industry until either the investment funds are used up or until the capitalist's share of the

expected marginal value of investment arising from the expanded capital falls to the level of the second most rewarding investment opportunity. If the latter alternative occurs and additional funds are available, simultaneous investment is carried on in the two most profitable industries until all the investment funds are used up or until the levels of return on capital in the two most profitable lines of investment are reduced to the rate of return expected in the third industry. Then simultaneous investment is carried on in all three industries until all the investment funds have been allocated. It is only if there are sufficient investment funds available to attain this state of expected equality among the rates of return in all sectors that the assumption of simultaneous investment in all three sectors is not restrictive. In essence, the assumption of simultaneous expansion in all sectors implies that sufficient investment funds are available so that the economy can afford the luxury of balanced growth.[1]

The implications of this assumption are discussed in greater detail in Chapter IV, where the "balanced investment" assumption is relaxed. Assuming balanced investment in all sectors is merely a simplifying assumption and is not to be construed as advocating balanced growth.

Wage, Price and Output Determination

The purpose of this section is to discuss the operation of the model without the influence of the government. At the start of every period

[1] For a critique of the balanced growth thesis and reasons why this cannot be attained, see Hirschman (18, Ch. 4). Hirschman argues that unbalanced growth may be desirable.

capital stocks $K = (K_1, K_2, K_3)$ are taken as data. Now the question is how do the consumers, capitalists, laborers, and entrepreneurs interact within that period to determine wages, prices and outputs? A simplified model is introduced to demonstrate that there are two degrees of freedom in the absence of government. These two degrees of freedom are subsequently used to choose a numeraire for prices and to define the exogenous wage rate.

Consider the following simplified model, where the suffix "a" on an equation number indicates the equation is derived from or is analogous to the original equation. Time subscripts are omitted since it is necessary to consider only one period. In each period consumers (laborers) attempt to maximize aggregate welfare

$$W = W(C_1, C_2), \tag{2.1a}$$

subject to their budget (income) restraint

$$P_1C_1 + P_2C_2 = J(P,Y), \tag{2.31a}$$

where P and Y are vectors representing (P_1, P_2, P_3) and (Y_s, Y_1, Y_2, Y_3) respectively. It is well known from consumer demand theory that such a maximization leads to a system of demand equations which are homogeneous of degree zero in prices and incomes. Since in this particular model nominal consumer income (2.31) is homogeneous of degree zero in prices,[1] the resulting demand equations are homogeneous of degree zero in prices. Consequently, the demand equations are sufficient to determine only relative prices. The two demand equations are denoted as

[1] Assuming government taxes and employment are ignored.

$$C_1 = C^1(P,Y) \tag{2.45}$$

and

$$C_2 = C^2(P,Y) \tag{2.46}$$

Next, consider production in the commercial agricultural sector. The production function,

$$Y_1 = H^1(F_1, L_1, K_1) \tag{2.7a}$$

and the first order conditions,[1]

$$P_1 H^1_F = P_2 \tag{2.22a}$$

and

$$P_1 H^1_L = \omega, \tag{2.23a}$$

imply a short run supply equation

$$Y_1 = Y^1(P_1, P_2, \omega, K_1). \tag{2.47}$$

Similarly for the manufacturing sector, from

$$Y_2 = H^2(F_2, L_2, K_2), \tag{2.8a}$$

$$P_2 H^2_{F_2} = P_2, \tag{2.25a}$$

and

$$P_2 H^2_{L_2} = \omega, \tag{2.26a}$$

we get the supply equation

$$Y_2 = Y^2(P_2, \omega, K_2). \tag{2.48}$$

The analogous equations relating to the capital goods sector,

$$Y_3 = H^3(F_3, L_3, K_3), \tag{2.9a}$$

---

[1] The subscripts on the functions denote partial derivatives.

$$P_3 H^3_{F_3} = P_2, \tag{2.28a}$$

and

$$P_3 H^3_{L_3} = \omega \tag{2.29a}$$

imply the supply equation

$$Y_3 = Y^3(P_2, P_3, \omega, K_3). \tag{2.49}$$

Since employment in the subsistence sector is a residual there is no derived demand for labor for this sector. Consequently, the supply equation for the subsistence sector is of a somewhat different nature. From (2.22a) and (2.23a) for sector 1 we get an equation indicating the derived demand for labor in sector 1. This is denoted as

$$L_1 = L^1(P_1, P_2, \omega, K_1). \tag{2.50}$$

Similarly, for sectors 2 and 3 we get derived labor demand equations denoted as

$$L_2 = L^2(P_2, \omega, K_2) \tag{2.51}$$

and

$$L_3 = L^3(P_2, P_3, \omega, K_3). \tag{2.52}$$

Substituting (2.50) - (2.52) into (2.12a), we get employment in the subsistence sector as

$$L_s = L_o - L^1 - L^2 - L^3 = L^s(P, \omega, K, L_o). \tag{2.53}$$

From (2.53), the production function

$$Y_s = H^s(F_s, L_s), \tag{2.6a}$$

and the first order condition

$$P_1 H^s_{Fs} = P_2, \tag{2.19a}$$

we get the supply equation for the subsistence sector,

$$Y_s = Y^s(P, \omega, K, L_o). \tag{2.54}$$

From the first order conditions (2.19a), (2.22a), (2.23a), (2.25a), (2.26a), (2.28a), and (2.29a), we can obtain derived demand equations for manufactured inputs

$$F_s = F^s(P, \omega, K, L_o), \tag{2.55}$$

$$F_1 = F^1(P_1, P_2, \omega, K_1), \tag{2.56}$$

$$F_2 = F^2(P_2, \omega, K_2), \tag{2.57}$$

and

$$F_3 = F^3(P_2, P_3, \omega, K_3). \tag{2.58}$$

By a similar procedure, it is possible to obtain derived demand equations for investment goods from the first order conditions (2.43) and (2.44), and the capitalists' budget constraint (2.35a). These investment demand equations are denoted as

$$I_1 = I^1(P, \omega, K), \tag{2.59}$$

$$I_2 = I^2(P, \omega, K), \tag{2.60}$$

and

$$I_3 = I^3(P, \omega, K). \tag{2.61}$$

By making the appropriate substitutions, the following market equilibrium equations are obtained for agricultural goods

$$Y^1(P_1, P_2, \omega, K_1) + Y^s(P, \omega, K, L_o) = C^1(P,Y) = C^1(P, \omega, K, L_o), \tag{2.34a}$$

manufactured goods

$$Y^2(P_2, \omega, K_2) = F^s(P, \omega, K, L_o) + F^1(P_1, P_2, \omega, K_1) + F^2(P_2, \omega, K_2) + F^3(P_2, P_3, \omega, K_3) + C^2(P, \omega, K, L_o), \quad (2.13a)$$

investment goods

$$Y^3(P_2, P_3, \omega, K) = I^1(P, \omega, K) + I^2(P, \omega, K) + I^3(P, \omega, K), \quad (2.17a)$$

and labor

$$L_o = L^s(P, \omega, K) + L^1(P_1, P_2, \omega, K_1) + L^2(P_2, \omega, K_2) + L^3(P_2, P_3, \omega, K_3) \quad (2.12a)$$

are obtained.

This leaves four equations to determine four variables, P_1, P_2, P_3 and ω. However, it must be recalled that in order to determine L_s in (2.53), the values for L_1, L_2, and L_3 were substituted into (2.12a). Thus, (2.12a) cannot be used as an equilibrium condition to determine a wage rate. (In effect a fifth variable, L_s, remains to be determined if (2.12a) is used as an equilibrium condition.) This leaves three equations and four unknowns. By choosing a numeraire and identifying an exogenous wage rate, the system becomes determinate. Thus, two equations are added:

$$P_{2t} \equiv 1, \quad (2.62)$$

and

$$\omega = \bar{\omega}. \quad (2.63)$$

In other words, manufactured output is chosen as the <u>numéraire</u> and labor is paid an exogenously determined,constant amount, $\bar{\omega}$, of manufactured goods per period. (These manufactured goods can, of course, be bartered or traded for agricultural goods.)

Supply response in agriculture - a digression

Much has been written about the nature of supply response in subsistence agriculture.[1] In this section it is demonstrated that in the decentralized model used in this study, subsistence output might respond inversely to an increase in the price of agricultural output. However, this potential inverse response is more than offset by an increase in production by the commercial agricultural sector. In other words, aggregate supply responds positively to changes in price in the decentralized model.[2]

One possibility for studying the supply response of agricultural output would be to differentiate the supply side of the equilibrium condition in (2.34a) with respect to P_1. This would presume explicit solutions for the supply functions of both the subsistence and commercial agricultural sectors. An indirect and much simpler means of examining supply response is to make the appropriate substitutions into the two equations[3]

$$\frac{\partial Y_s}{\partial P_1} = H^s_{F_s}\frac{\partial F_s}{\partial P_1} + H^s_{L_s}\frac{\partial L_s}{\partial P_1} \tag{2.64}$$

and

$$\frac{\partial Y_1}{\partial P_1} = H^1_{F_1}\frac{\partial F_1}{\partial P_1} + H^1_{L_1}\frac{\partial L_1}{\partial P_1}. \tag{2.65}$$

---

[1] See, for example, the literature cited by Bhagwati and Chakravarty (4).

[2] The same result applies to the centralized model introduced in Chapter IV.

[3] In the derivation of (2.65) it has been assumed that $\frac{\partial K_1}{\partial P_1} = 0$. That is, this section deals with short-run supply responses.

From (2.6) we obtain

$$H^s_{F_s} = \frac{\alpha_1 Y_s}{F_s}, \tag{2.66}$$

and

$$H^s_{L_s} = \frac{\alpha_2 Y_s}{L_s}. \tag{2.67}$$

From (2.19) we get

$$\frac{\partial F_s}{\partial P_1} = \frac{a_1 (P_1 \alpha_1 \sigma^*_s L_s^{\alpha_2})^{a_1}}{P_1} \tag{2.68}$$

and (2.53) together with (2.23) yields

$$\frac{\partial L_s}{\partial P_1} = - \frac{\partial L_1}{\partial P_1} = - \frac{b_2}{P_1} \frac{\left(P_1 \beta_2 \sigma^*_1 F_1^{\beta_1}\right)^{b_2}}{\omega}, \tag{2.69}$$

where $\sigma^*_s = G_s^{\lambda} \sigma_s$, $\sigma^*_1 = G_1^{\lambda} \sigma_1 K_1^{\beta_3}$, $a_1 = \frac{1}{1 - \alpha_1}$, and $b_2 = \frac{1}{1 - \beta_2}$.

Substituting into (2.64) yields

$$\frac{\partial Y_s}{\partial P_1} = \frac{Y_s}{P_1} \left[\frac{a_1 \alpha_1 (P_1 \alpha_1 \sigma^*_s L_s^{\alpha_2})^{a_1}}{F_s} - \frac{b_2 \alpha_2 (\omega^{-1} P_1 \beta_2 \sigma^*_1 F_1^{\beta_1})^{b_2}}{L_s} \right]. \tag{2.70}$$

This will be negative if the absolute value of the second term on the right exceeds the magnitude of the first. In other words, output from the subsistence sector will decline as the product price increases if the effect on production resulting from the exodus of labor from the subsistence sector (due to the more lucrative jobs being created in the commercial sector) more than offsets the production increase resulting from the increased use of manufactured inputs. This possibility does not exist for total supply, however, as is clearly evident by adding (2.70) to the analogous equation for the commercial sector. This result is

$$\frac{\partial Y_s}{\partial p_1} + \frac{\partial Y_1}{\partial p_1} = \frac{1}{p_1}\left[\frac{\alpha_1 Y_s a_1 (p_1 \alpha_1 \sigma_s^* L_s^{\alpha_2})^{a_1}}{F_s} + \frac{\beta_1 Y_1 b_1 (\beta_1 p_1 \sigma_1^* L_1^{\beta_2})^{b_1}}{F_1}\right.$$
$$\left. + b_2\left(\frac{\beta_2 Y_1}{L_1} - \frac{\alpha_2 Y_s}{L_s}\right)\left(\frac{\beta_2 p_1 \sigma_1^* F_1^{\beta_1}}{\omega}\right)^{b_2}\right]. \qquad (2.71)$$

The first and second terms to the right of the equal sign are clearly positive. That the last term is also positive becomes evident when the assumption implied in (2.21) is recalled. Specifically, the marginal productivity of labor in the subsistence sector is lower than in the commercial sector.

Finite Planning Horizons and Post-Plan Considerations

When only a finite horizon is considered in any intertemporal development plan, several interrelated problems arise.[1] Two of the problems involve the length of the planning period to be considered and the allowances that are to be made during the plan for periods following the plan.

The choice of length of the planning horizon is crucial in an optimizing model. An economic plan that is optimal for τ periods may not be optimal for $\tau + 1$ periods. An ideal model would be one in which the optimal plan for the first periods would be invariant regardless of whether a horizon of τ periods or $\tau + t$ $(t \neq 0)$ periods is being considered. One theoretical solution to this problem would be to consider a horizon encompassing the infinite future. From a practical standpoint, however, uncertainty regarding the future, lack of relevant data, and computational

[1] For a discussion of some of these problems see Chakravarty and Eckaus (7).

difficulties invariably result in finite horizons in empirical applications.[1]

Once the decision has been made to truncate the horizon at τ periods, the question arises as to what happens during the periods immediately following the termination of the plan. Post-plan activities and possibilities are conditioned by the productive capacity bequeathed to the post-plan era. If no special provision is made to provide some incentive to invest or accumulate productive capacity in the latter stages of the plan, the myopia of the decision makers would tend to emphasize current consumption rather than to accumulate for future generations. One possible solution is to require a specified capital stock to be available for period $\tau + 1$. Another possibility is to provide an additional incentive to accumulate near the end of the plan by attaching a value to any capital bequeathed to posterity.[2]

In the present model, the incentives to the private investors in period t are a function of prices, returns to capital, and government investments in period t. The same considerations apply in period τ. The investors are assumed to behave in the same manner in the last period of the plan as in any other period since they are not "aware" that period τ is the last period of the plan.[3] However, the rules specifying

---

[1] For a discussion of some of the difficulties involved with considering infinite planning horizons, see Chakravarty (6).

[2] The decision of what and how much to leave for future generations is essentially a political decision and involves ethics. The role of economics in this decision is to identify the consequences of the alternatives.

[3] This appears to be an assumption that has empirical relevance if the transitions between plans are reasonably smooth.

government expenditures provide no incentive to invest in private capital accumulation or SOC in the final period since this investment does not contribute directly to welfare in period τ. The only payoff realized in the plan period is through any additional employment created in the capital goods industry or government employment in the placement of SOC. However, the government collects tax revenue which must be spent. The rule imposed on government expenditures in period τ is that expenditures in the final period must be allocated in the same proportions as in period $\tau - 1$. Defining $T = \tau - 1$, these rules may be specified as

$$M_T \bar{L}_{s\tau} = M_\tau \bar{L}_{sT} \tag{2.72}$$

$$M_T \bar{L}_{1\tau} = M_\tau \bar{L}_{1T} \tag{2.73}$$

$$M_T P_{3\tau} \bar{I}_{2\tau} = M_\tau P_{3T} \bar{I}_{2T} \tag{2.74}$$

and

$$M_T P_{3\tau} \bar{I}_{3\tau} = M_\tau P_{3T} \bar{I}_{3T} \tag{2.75}$$

This completes the formal presentation of the model. The model is optimized in Chapter III.

CHAPTER III. OPTIMIZATION OF THE DECENTRALIZED MODEL

The general nature of the optimizing problem for the decentralized, dual-economy model discussed in Chapter II is to maximize a differentiable, concave function (2.1) subject to a number of differentiable convex constraints. In addition, it is required that all variables must be non-negative. This type of problem can be maximized by application of the Kuhn-Tucker first-order conditions (27). This involves formulating a Lagrangean function which is presented in the next section. The first-order conditions for the decentralized model are presented in the subsequent section. The chapter is concluded with a discussion of some of the implications of the optimum solution.

The Lagrangean Function

The Lagrangean multipliers are denoted as Z_{it}, where the subscript i corresponds to the equation number of the associated constraint in Chapter II. The subscript t refers to the time period. The constraints in the function are formulated in a manner such that the associated dual variables (Lagrangean multipliers) are all positive with the possible exceptions of Z_{43t}, Z_{44t}, Z_{72}, Z_{73}, Z_{74}, and Z_{75} which can be either positive or negative. Some of the equations in Chapter II have been eliminated by substitution. Letting $T = \tau - 1$, the following Lagrangean function results:

$$
\begin{aligned}
V = {} & \Sigma(\mu_1 C_{1t} + \mu_2 C_{2t} - \mu_{11} C_{1t}^2 + \mu_{12} C_{1t} C_{2t} - \mu_{22} C_{2t}^2)(1+\rho)^{-t} \\
& + \Sigma\, Z_{6t}(\sigma_s G_{st}^{\lambda} F_{st}^{\alpha_1} L_{st}^{\alpha_2} - Y_{st}) + \Sigma\, Z_{7t}(\sigma_1 G_{1t}^{\lambda} F_{1t}^{\beta_1} L_{1t}^{\beta_2} K_{1t}^{\beta_3} - Y_{1t}) \\
& + \Sigma\, Z_{8t}(\sigma_2 (1+\varepsilon)^t F_{2t}^{\gamma_1} L_{2t}^{\gamma_2} K_{2t}^{\gamma_3} - Y_{2t}) \\
& + \Sigma\, Z_{9t}(\sigma_3 (1+\varepsilon)^t F_{3t}^{\delta_1} L_{3t}^{\delta_2} K_{3t}^{\delta_3} - Y_{3t}) \\
& + \Sigma\, Z_{12t}(L_o - \bar{L}_{st} - \bar{L}_{1t} - L_{st} - L_{1t} - L_{2t} - L_{3t}) \\
& + \Sigma\, Z_{13t}(Y_{2t} - F_{st} - F_{1t} - F_{2t} - F_{3t} - C_{2t}) \\
& + \Sigma\, Z_{17t}(Y_{3t} - I_{1t} - I_{2t} - I_{3t} - \bar{I}_{2t} - \bar{I}_{3t}) \\
& + \Sigma\, Z_{18t}\{\psi[P_{1t}Y_{st}(1-\alpha_1) + P_{1t}Y_{1t}(1-\beta_1) + Y_{2t}(1-\gamma_1) + P_{3t}Y_{3t}(1-\delta_1)] \\
& \qquad - \omega(1-\psi)(\bar{L}_{st} + \bar{L}_{1t}) - P_{3t}(\bar{I}_{2t} + \bar{I}_{3t})\} \\
& + \Sigma\, Z_{19t}(F_{st} - \alpha_1 P_{1t} Y_{st}) + \Sigma\, Z_{22t}(F_{1t} - \beta_1 P_{1t} Y_{1t}) \\
& + \Sigma\, Z_{23t}(\beta_2 P_{1t} Y_{1t} - L_{1t}\omega) + \Sigma\, Z_{25t}(F_{2t} - \gamma_1 Y_{2t}) \\
& + \Sigma\, Z_{26t}(\gamma_2 Y_{2t} - \omega L_{2t}) + \Sigma\, Z_{28t}(F_{3t} - \delta_1 P_{3t} Y_{3t}) \\
& + \Sigma\, Z_{29t}(\delta_2 P_{3t} Y_{3t} - \omega L_{3t}) \\
& + \Sigma\, Z_{31t}\{(1-\psi)[(\alpha_2+\alpha_4)Y_{st}P_{1t} + \beta_2 Y_{1t}P_{1t} + \gamma_2 Y_{2t} + \delta_2 Y_{3t}P_{3t} \\
& \qquad + \omega(\bar{L}_{st} + \bar{L}_{1t})] - P_{1t}C_{1t} - C_{2t}\} \\
& + \Sigma\, Z_{32t}(C_{1t} - 1) + \Sigma\, Z_{33t}(C_{2t} - 1) \\
& + \Sigma\, Z_{34t}(Y_{st} + Y_{1t} - C_{1t}) \\
& + \Sigma\, Z_{35t}\{(1-\psi)[(\beta_3+\beta_4)P_{1t}Y_{1t} + \gamma_3 Y_{2t} + \delta_3 P_{3t} Y_{3t}] - P_{3t}(I_{1t} + I_{2t} + I_{3t})\} \\
& + \Sigma\, Z_{43t}\{A_{2t}(K_{2t} + \bar{I}_{2t} + I_{2t})^{\gamma_3 - 1} - A_{3t}(K_{3t} + \bar{I}_{3t} + I_{3t})^{\delta_3 - 1}\} \\
& + \Sigma\, Z_{44t}\{A_{2t}(K_{2t} + \bar{I}_{2t} + I_{2t})^{\gamma_3 - 1} - A_{1t}(K_{1t} + I_{1t})^{\beta_3 - 1}\}
\end{aligned}
$$

$$+ \Sigma Z_{72}(\bar{L}_{sT}M_{\tau} - \bar{L}_{s\tau}M_T)$$

$$+ \Sigma Z_{73}(\bar{L}_{1T}M_{\tau} - \bar{L}_{1\tau}M_T)$$

$$+ \Sigma Z_{74}(P_{3T}\bar{I}_{2T}M_{\tau} - P_{3\tau}\bar{I}_{2\tau}M_T)$$

$$+ \Sigma Z_{75}(P_{3T}\bar{I}_{3T}M_{\tau} - P_{3\tau}\bar{I}_{3\tau}M_T) \qquad (3.1)$$

In subsequent sections (2.10), (2.11), (2.14)-(2.16), (2.18) and (2.40)-(2.42) are treated as though they have been eliminated by substitution. However, the symbols defined by these equations are used whenever this simplifies notation. In addition, (2.62) and (2.63) are completely eliminated by substitution. All the summations in (3.1) refer to the subscript t and run over the range $t=1, \ldots, \tau$.

The First-Order Conditions

In this section, the first-order conditions for an optimum resulting from the application of the Kuhn-Tucker conditions to the Lagrangean function (3.1) are presented. These conditions specialize to the classical calculus first-order conditions if the variable in question is known to be positive. The economy represented by the model has four production sectors with Cobb-Douglas production functions. Assuming that production is positive in all sectors implies that all of the factor inputs in every period are positive. In Chapter II the simplifying assumptions were made that $I_{it} > 0$ for all i and t. Constraints (2.32) and (2.33) require C_{1t} and C_{2t} to be positive and it is not unreasonable to assume P_{1t} and P_{3t} to be positive.[1] This leaves only the four government expenditure

[1] If this were not the case, there would be no incentive to produce.

variables to be subjected to the corner conditions. More specifically, the Kuhn-Tucker conditions are applied to the four variables $\bar{L}_{st}$, $\bar{L}_{1t}$, $\bar{I}_{2t}$ and $\bar{I}_{3t}$.

A word about notation. Subscripts on V denote partial derivatives (e.g., $V_X = \frac{\partial V}{\partial X}$). For simplicity, time subscripts are omitted whenever this will not cause any confusion. In all cases the same first-order conditions apply to every time period ($t=1, \ldots, \tau$) unless otherwise specified. The first-order conditions for an optimum are as follows:

$$V_{C_1} = (\mu_1 - 2\mu_{11}C_1 + \mu_{12}C_2)(1+\rho)^{-t} - Z_{31}P_1 + Z_{32} - Z_{34} = 0 \tag{3.2}$$

$$V_{C_2} = (\mu_2 + \mu_{12}C_1 - 2\mu_{22}C_2)(1+\rho)^{-t} - Z_{13} - Z_{31} + Z_{33} = 0 \tag{3.3}$$

$$V_{Y_s} = -Z_6 + Z_{18}P_1\psi(1-\alpha_1) - Z_{19}P_1\alpha_1 + Z_{31}P_1(1-\psi)(\alpha_2+\alpha_4) + Z_{34} = 0 \quad (t = 1, \ldots, \tau-2) \tag{3.4}$$

$$V_{Y_1} = -Z_7 + Z_{18}P_1\psi(1-\beta_1) - Z_{22}P_1\beta_1 + Z_{23}P_1\beta_2 + Z_{31}P_1(1-\Psi)\beta_2 + Z_{34} + Z_{35}P_1(1-\Psi)(\beta_3+\beta_4) = 0 \quad (t=1, \ldots, \tau-2) \tag{3.5}$$

$$V_{Y_2} = -Z_8 + Z_{13} + Z_{18}\Psi(1-\gamma_1) - Z_{25}\gamma_1 + Z_{26}\gamma_2 + Z_{31}(1-\Psi)\gamma_2 + Z_{35}(1-\Psi)\gamma_3 = 0 \quad (t=1, \ldots, \tau-2) \tag{3.6}$$

$$V_{Y_3} = -Z_9 + Z_{17} + Z_{18}P_3\Psi(1-\delta_1) - Z_{28}P_3\delta_1 + Z_{29}P_3\delta_2 + Z_{31}P_3(1-\Psi)\delta_2 + Z_{35}P_3(1-\Psi)\delta_3 = 0 \quad (t=1, \ldots, \tau-2) \tag{3.7}$$

$$V_{F_s} = Z_6\alpha_1 Y_s/F_s - Z_{13} + Z_{19} = 0 \tag{3.8}$$

$$V_{F_1} = Z_7\beta_1 Y_1/F_1 - Z_{13}+Z_{22}-Z_{44}\beta_1 A_1(K_1+I_1)^{\beta_3-1}/F_1 = 0 \tag{3.9}$$

$$V_{F_2} = Z_8\gamma_1 Y_2/F_2 - Z_{13}+Z_{25}+(Z_{43}+Z_{44})\gamma_1 A_2(K_2+\bar{I}_2+I_2)^{\gamma_3-1}/F_2 = 0 \tag{3.10}$$

$$V_{F_3} = Z_9\delta_1 Y_3/F_3 - Z_{13}+Z_{28} - Z_{43}\delta_1 A_3(K_3+\bar{I}_3+I_3)^{\delta_3-1}/F_3 = 0 \tag{3.11}$$

$$V_{L_s} = Z_6\alpha_2 Y_s/L_s - Z_{12} = 0 \tag{3.12}$$

$$V_{L_1} = Z_7\beta_2 Y_1/L_1 - Z_{12}-Z_{23}\omega - Z_{44}\beta_2 A_1(K_1+I_1)^{\beta_3-1}/L_1 = 0 \tag{3.13}$$

$$V_{L_2} = Z_8\gamma_2 Y_2/L_2 - Z_{12}-Z_{26}\omega + (Z_{43}+Z_{44})\beta_2 A_2(K_2+\bar{I}_2+I_2)^{\gamma_3-1} = 0 \tag{3.14}$$

$$V_{L_3} = Z_9\delta_2 Y_3/L_3 - Z_{12}-Z_{29}\omega - Z_{43}\delta_2 A_3(K_3+\bar{I}_3+I_3)^{\delta_3-1} = 0 \tag{3.15}$$

$$\begin{aligned} V_{P_1} = {} & Z_{18}\Psi\{(Y_s\ (1-\alpha_1)+Y_1(1-\beta_1)\} - Z_{19}\alpha_1 Y_s - Z_{22}\beta_1 Y_1 + Z_{23}\beta_2 Y_1 \\ & + Z_{31}[(1-\Psi)\{(\alpha_2+\alpha_4)Y_s+\beta_2 Y_1\}-C_1] + Z_{35}(1-\Psi)(\beta_3+\beta_4)Y_1 \\ & - Z_{44}A_1(K_1+I_1)^{\beta_3-1}/P_1 = 0 \quad (t=1, \ldots, \tau-2) \end{aligned} \tag{3.16}$$

$$\begin{aligned} V_{P_3} = {} & Z_{18}\{\Psi(1-\delta_1)Y_3 - \bar{I}_2-\bar{I}_3\} + \{Z_{29}\delta_2 - Z_{28}\delta_1 + Z_{31}\delta_2(1-\Psi)\}Y_3 \\ & + Z_{35}\{(1-\Psi)\delta_3 Y_3 - I_1-I_2-I_3\} - Z_{43}A_3(K_3+\bar{I}_3+I_3)^{\delta_3-1}/P_3 = 0 \\ & (t=1, \ldots, \tau-2) \end{aligned} \tag{3.17}$$

$$\begin{aligned} V_{I_{1t}} = {} & \beta_3 \sum_{i=t+1}^{\tau} (Z_{7i}Y_{1i}/K_{1i}) - Z_{17t} - Z_{35t}P_{3t} \\ & + (1-\beta_3) \sum_{i=t}^{\tau} Z_{44i}A_{1i}(K_{1i}+I_{1i})^{\beta_3-2} = 0 \end{aligned} \tag{3.18}$$

$$\begin{aligned} V_{I_{2t}} = {} & \gamma_3 \sum_{i=t+1}^{\tau} (Z_{8i}Y_{2i}/K_{2i}) - Z_{17t}-Z_{35t}P_{3t} \\ & + (\gamma_3-1) \sum_{i=t}^{\tau} (Z_{43i}+Z_{44i})A_{2i}(K_{2i}+\bar{I}_{2i}+I_{2i})^{\gamma_3-2} = 0 \end{aligned} \tag{3.19}$$

$$V_{I_{3t}} = \delta_3 \sum_{i=t+1}^{\tau} (Z_{9i}Y_{3i}/K_{3i}) - Z_{17t} - Z_{35t}P_{3t}$$

$$+ (1-\delta_3) \sum_{i=t}^{\tau} Z_{43i}A_{3i}(K_{3i}+\bar{I}_{3i}+I_{3i})^{\delta_3-2} = 0 \qquad (3.20)$$

$$V_{\bar{L}_{st}} = \lambda \sum_{i=t+1}^{\tau} (Z_{6i}Y_{si}/G_{si}) - Z_{12t} + \omega(1-\Psi)(Z_{31}-Z_{18}) \leq 0;$$

$$\bar{L}_{st}V_{\bar{L}_{st}} = 0; \ \bar{L}_{st} \geq 0 \quad (t=1, \ldots, \tau-2) \qquad (3.21)$$

$$V_{\bar{L}_{1t}} = \lambda \sum_{i=t+1}^{\tau} (Z_{7i}Y_{1i}/G_{1i}) - Z_{12t} + \omega(1-\Psi)(Z_{31} - Z_{18})$$

$$- \lambda \sum_{t=1}^{\tau} \{Z_{44i}A_{1i}(K_{1i}+I_{1i})^{\beta_3-1}/G_{1,i+1}\} \leq 0;$$

$$L_{1t}V_{\bar{L}_{st}} = 0; \ \bar{L}_{1t} \geq 0 \quad (t=1, \ldots, \tau-2) \qquad (3.22)$$

$$V_{\bar{I}_{2t}} = \gamma_3 \sum_{i=t+1}^{\tau} (Z_{8i}Y_{2i}/K_{2i}) - Z_{17t} - Z_{18t}P_{3t}$$

$$+(\gamma_3-1) \sum_{i=t}^{\tau} (Z_{43i}+Z_{44i})A_{2i}(K_{2i}+\bar{I}_{2i}+I_{2i})^{\gamma_3-2} \leq 0;$$

$$\bar{I}_{2t}V_{I_{2t}} = 0; \ \bar{I}_{2t} \geq 0 \quad (t=1, \ldots, \tau-2) \qquad (3.23)$$

$$V_{\bar{I}_{3t}} = \delta_3 \sum_{i=t+1}^{\tau} (Z_{9i}Y_{3i}/K_{3i}) - Z_{17t} - Z_{18t}P_{3t}$$

$$+ (1-\delta_3) \sum_{i=t}^{\tau} Z_{43i}A_{3i}(K_{3i}+\bar{I}_{3i}+I_{3i})^{\delta_3-2} \leq 0;$$

$$\bar{I}_{3t}V_{\bar{I}_{3t}} = 0; \ \bar{I}_{3t} \geq 0; \quad (t=1, \ldots, \tau-2) \qquad (3.24)$$

In addition to the above first-order conditions, certain special first-order conditions are required to determine the values of some of the variables in the last two periods of the plan. These special first-order conditions result from the restrictions placed on the allocation of

government investment during periods τ-1 and τ. These special conditions can be derived in a straightforward manner by simply differentiating (3.1) with respect to the appropriate variables for periods τ-1 and τ, and then applying the rules of calculus or Kuhn and Tucker. Although the derivation is relatively simple, the resulting equations and inequalities are very cumbersome and difficult to interpret. Since these conditions are not crucial to the subsequent discussion they are not presented.

The first-order conditions in (3.2)-(3.24) and the special conditions relating to the last two periods of the plan must be combined with the equations of the model to determine values for the variables that will optimize (2.1). The relevant equations from Chapter II are (2.6)-(2.9), (2.12), (2.13), (2.17)-(2.19), (2.22), (2.23), (2.25), (2.26), (2.28), (2.29), (2.31)-(2.35), (2.43), (2.44) and (2.72)-(2.75). It should be noted that the failure to present all of the first-order conditions relating to the last two periods of the plan results in a certain amount of indeterminacy in the earlier periods of the plan as well. The subsequent discussion is not affected by this indeterminacy. It is sufficient that the entire system is determinate.

In the next section, factors influencing the feasibility and desirability of investing in SOC in the subsistence sector in one period are discussed. This is followed by a section discussing the remaining investment alternatives available to the government. These alternatives are compared with private investment opportunities.

Investing in SOC in the Subsistence Sector

In every time period the government has a certain amount of tax revenue to allocate among the four alternatives $\bar{L}_{st}$, $\bar{L}_{1t}$, $\bar{I}_{2t}$, and $\bar{I}_{3t}$. The optimum levels of these variables must satisfy conditions (3.21)-(3.24) in each of the first τ-2 periods. Thus, the government should invest in SOC in the subsistence sector in period t only if $V_{\bar{L}_{st}} = 0$ in (3.21). This implies that

$$\lambda \sum_{i=t+1}^{\tau} (Z_{6i}Y_{si}/G_{si}) + Z_{31t}\omega(1-\psi) = Z_{12t} + Z_{18t}\omega(1-\psi) \qquad (3.25)$$

where the two terms on the left are social payoffs while those on the right are social opportunity costs. An interpretation of (3.25) is that if $\bar{L}_{st}$ is to be greater than zero, then the sum of the discounted marginal social value productivity in all subsequent plan periods of labor used in subsistence SOC accumulation in period t plus the social value of income paid to labor on the SOC project must be large enough to offset the social opportunity cost of the labor employed on the project plus the social opportunity cost of the government expenditure.[1] Thus, the problem is to identify those particular characteristics of an economy that will contribute to fulfilling this requirement. From (3.25) a number of factors can be identified.

---

[1] The condition which must be satisfied to make it socially desirable to invest in subsistence SOC in period t depends on the amount that will be invested in subsistence SOC in period τ-1. It is this type of intertemporal or dynamic link which results in the indeterminacy in the earlier periods from not specifying all the first-order conditions for the last two periods of the plan. Thus, a certain amount of intertemporal substitution is possible. The higher the level of $L_{s,\tau-1}$, the relatively less desirable it will be to invest in subsistence sector SOC in period $t<\tau-1$. Similarly, the larger L_{st}, the relatively less desirable it will be to invest in subsistence SOC in period τ-1.

The first factor to be discussed is the coefficient, λ. Ceteris paribus, the larger the magnitude of λ the more productive SOC will be at all levels of G_{st}, and consequently, the higher the optimum G_{st}/Y_{st} ratio will be for any given set of social valuations of costs and payoffs. What particular characteristics of an economy make the subsistence sector responsive to investments in SOC? Schultz suggests one of the crucial elements is the level of education of the people involved (57). Unquestionably, many other social and physical characteristics of the people and the type and nature of the agriculture involved have important influences on this coefficient. The magnitude of λ will also depend on the type of infrastructure being developed (for example, building irrigation systems versus extension activities).

A higher λ coefficient will make investment in SOC physically more productive and, ceteris paribus, more socially profitable. Similarly, the higher the social valuation of subsistence agricultural production (Z_{6t}) in subsequent periods, the higher the likelihood that the benefits accruing to investment in SOC in period t will offset the costs involved. The value of this variable, Z_{6t}, may be expected to vary inversely with the ratio of C_{1t}/C_{2t}. In other words, as the ratio agricultural production to manufacturing "surplus" increases, the social valuation of agricultural production might be expected to fall.[1] Hence, the higher the ratio of C_1/C_2, the relatively less desirable investment in G_{st} becomes.

---

[1] This is what happens to the terms of trade between those two goods. See the discussion in Chapter II.

The social value of an additional marginal unit of labor (consumer) income in period t is given by Z_{31t}. The value of this variable varies directly with the proportion of the population employed in the subsistence sector. That is, the value of Z_{31t} increases as the proportion of the entire labor force employed in the subsistence sector (L_{st}/L_o) increases. This is because, for a given set of prices, per capita real income to labor declines as the ratio L_{st}/L_o increases, and ceteris paribus the marginal social value of an additional unit of consumer income (Z_{31t}) will increase as income decreases. Thus, ceteris paribus, the higher the proportion of labor in subsistence agriculture, the relatively more desirable it becomes to invest in G_{st}.

Turning to the right hand side of (3.25), the marginal social opportunity cost of an additional unit of labor (Z_{12t}) may be expected to decline as the size of the labor force (L_o) increases. This follows because the value of Z_{12} is determined to a large extent by the social value productivity of labor in subsistence agriculture and this value declines as L_o and L_s increase.

The last term on the right hand side of the equation indicates the social opportunity cost of using government tax revenue to accumulate SOC. The magnitude of this term is related to the amount of tax revenue available and the other alternatives open to the government. These alternatives are discussed in the next section.

In conclusion, it may be asserted that for an economy with a given configuration of wages, prices, capital stocks, SOC, primary resource base, and technology, the social desirability of investing in SOC in the

subsistence sector will increase as the size of the labor force (L_o) increases. This follows because for a given wage-price-capital stock configuration, L_{st}/L_o increases as L_o increases since L_{st} is a residual[1] which varies directly with L_o. As L_{st} increases, Y_{st} increases and the "optimum" level of G_{st} increases. In addition, the influence of an expanded labor supply on the social desirability of subsistence SOC expansion through the influence of the increased ratio L_{st}/L_o, the increased social payoff to employment creation (Z_{31}), and the reduced social opportunity cost of labor have already been enumerated.

Alternative Investment Opportunities

In the preceding section it was suggested that the social opportunity cost of using government tax revenue to accumulate SOC in the subsistence sector depended on the amount of tax revenue available as well as the social desirability of investment alternatives. The alternatives available to the government in any period are expenditures on $\bar{L}_{1t}$, $\bar{I}_{2t}$, and $\bar{I}_{3t}$. If any of these investment alternatives are to be utilized in a particular period,[2] the corresponding first-derivative of (3.1) must be equal to zero in the first-order conditions (3.22)-(3.24). For example, if $\bar{I}_{3t} > 0$, then $V_{\bar{I}_{3t}} = 0$ in (3.24). Suppose $V_{\bar{I}_{3t}} = 0$. Subtracting $V_{\bar{I}_{3t}}$ from (3.20) we get the result that

---

[1] See (2.53).

[2] Note that at least one of the four government alternatives must be utilized in every period.

$$V_{I_{3t}} - V_{\bar{I}_{3t}} = Z_{35t}P_{3t} - Z_{18t}P_{3t} = 0 \tag{3.26}$$

and since P_{3t} is positive by assumption,

$$Z_{35t} = Z_{18t}. \tag{3.26a}$$

This suggests that if it is socially desirable for the government to invest in $\bar{I}_{3t}$, then the social opportunity cost of using government tax revenue (Z_{18t}) for this purpose must be equal to the social opportunity cost of using private investment funds (Z_{35t}). Furthermore, if (3.26a) holds, then it follows immediately from (3.19) and (3.23) that

$$V_{I_{2t}} = V_{\bar{I}_{2t}} = 0 \tag{3.27}$$

In other words, if it is socially desirable for government to invest in $\bar{I}_{3t}$ at the margin, then it is also socially desirable for the government to invest in $\bar{I}_{2t}$ at the margin. This result is not surprising in view of the balanced investment assumption discussed in Chapter II. If the additional opportunity of investing in private capital in sector 1 was available to the government, the same result would apply. If it was socially desirable for the government to invest in either of the other two sectors, then it would also be desirable to invest in $\bar{I}_{1t}$ at the margin.

If the assumption that $V_{\bar{I}_{3t}} = 0$ is relaxed but the requirement that $V_{\bar{I}_{3t}} \leq 0$ is retained, then it is immediately obvious from (3.26) that

$$Z_{18t} \geq Z_{35t}. \tag{3.26b}$$

This suggests that the social benefit to be derived from an additional unit of tax revenue must always be at least as great as the social

benefit to be derived from an additional unit of private savings. This result follows because of the unilateral transfer possibilities from the public budget to the private savings fund. If the marginal social benefit of private investment exceeds that of public investment in SOC, the government simply invests in private capital in either sectors 2 or 3. The private investors allocate their investment funds in a manner that takes full account of the government placed investments, $\bar{I}_{2t}$ and $\bar{I}_{3t}$. Thus, the same result would ensue if the government simply transferred tax revenue to the private investors' budget and allowed these investors to allocate the funds.

In the next chapter, a model of a dualistic economy is formulated in which the government has control over the allocation of private savings. In addition, the government still has the tax budget which may be used for either investment in SOC or for additions to the private capital stock. Any income earned on the capital stock is invested in further capital accumulation. Thus, both private and public investments are controlled by the government. This model is termed the centralized dual-economy model.

CHAPTER IV. ANALYSIS OF THE CENTRALIZED MODEL

In this chapter, the decentralized model is reformulated in a manner that will simplify the first-order conditions for the maximum without appreciably altering many of the basic features of the original model. The simplification facilitates the economic analysis of the optimum conditions. The major portion of this chapter is devoted to an intensive analysis of the nature of the solution to the requirements for an optimum.

A Reformulation of the Model

In this section the decentralized model is modified so that the role of the government planners is expanded to include control over the allocation of private investment funds. These investment funds are allocated among the alternatives in a manner consistent with maximization of the objective function. This modification simplifies the problem considerably in some respects while the very restrictive assumption of balanced private investment in every period is relaxed. In the new formulation it is not assumed that investment takes place in all three sectors in every period.

A number of features of the model remain virtually unchanged. One of the aspects that must be modified, however, is the nature of the provisions made to assure adequate post-plan productive capacity. An incentive to invest in the last period of the plan is induced through a modification of the welfare function. A positive weight is attached to post terminal productive capacity (GNP) evaluated at period τ prices. Letting $T = \tau + 1$, the new welfare function is denoted as

$$V = \sum_{t=1}^{\tau} (\mu_1 C_{1t} + \mu_2 C_{2t} - \mu_{11} C_{1t}^2 + \mu_{12} C_{1t} C_{2t} - \mu_{22} C_{2t}^2)(1 + \rho)^{-t}$$

$$+ \theta\{P_{1\tau}\sigma_s G_{sT}^{\lambda} F_{s\tau}^{\alpha_1} L_{s\tau}^{\alpha_2} + P_{1\tau}\sigma_1 G_{1T}^{\lambda} F_{1\tau}^{\beta_1} L_{1\tau}^{\beta_2} K_{1T}^{\beta_3} + (1+\varepsilon)^T \sigma_2 F_{2\tau}^{\gamma_1} L_{2\tau}^{\gamma_2} K_{2T}^{\gamma_3}$$

$$-F_{s\tau} - F_{1\tau} - F_{2\tau} - F_{3\tau} + P_{3\tau}(1+\varepsilon)^T \sigma_3 F_{3\tau}^{\delta_1} L_{s\tau}^{\delta_2} K_{3T}^{\delta_3}\}. \tag{4.1}$$

All parameters and variables are defined as in Chapter II, with the only new parameter, θ, indicating the weight or emphasis placed on the provision for future generations. This welfare function is maximized subject to the following set of constraints which apply to each period ($t = 1, \ldots, \tau$).

$$Y_{st} = \sigma_s G_{st}^{\lambda} F_{st}^{\alpha_1} L_{st}^{\alpha_2} \tag{4.2}$$

$$Y_{1t} = \sigma_1 G_{1t}^{\lambda} F_{1t}^{\beta_1} L_{1t}^{\beta_2} K_{1t}^{\beta_3} \tag{4.3}$$

$$Y_{2t} = \sigma_2 (1+\varepsilon)^t F_{2t}^{\gamma_1} L_{2t}^{\gamma_2} K_{2t}^{\gamma_3} \tag{4.4}$$

$$Y_{3t} = \sigma_3 (1+\varepsilon)^t F_{3t}^{\delta_1} L_{3t}^{\delta_2} K_{3t}^{\delta_3} \tag{4.5}$$

$$L_o = \bar{L}_{st} + \bar{L}_{1t} + L_{st} + L_{1t} + L_{2t} + L_{3t} \tag{4.6}$$

$$Y_{st} + Y_{1t} = C_{1t} \tag{4.7}$$

$$Y_{2t} = F_{st} + F_{1t} + F_{2t} + F_{3t} + C_{2t} \tag{4.8}$$

$$Y_{3t} = I_{1t} + I_{2t} + I_{3t} \tag{4.9}$$

$$\psi\{P_{1t}Y_{st}(1-\alpha_1) + P_{1t}Y_{1t}(1-\beta_1) + Y_{2t}(1-\gamma_1) + P_{3t}Y_{3t}(1-\delta_1)$$

$$+ \omega(\bar{L}_{st} + \bar{L}_{1t})\} = \omega(\bar{L}_{st} + \bar{L}_{1t}) + P_{3t}I_t \tag{4.10}$$

$$\alpha_1 P_{1t} Y_{st} = F_{st} \tag{4.11}$$

$$\beta_1 P_{1t} Y_{1t} = F_{1t} \tag{4.12}$$

$$\gamma_1 Y_{2t} = F_{2t} \tag{4.13}$$

$$\delta_1 P_{3t} Y_{3t} = F_{3t} \tag{4.14}$$

$$\beta_2 P_{1t} Y_{1t} = L_{1t}\omega \tag{4.15}$$

$$\gamma_2 Y_{2t} = L_{2t}\omega \tag{4.16}$$

$$\delta_2 P_{3t} Y_{3t} = L_{3t}\omega \tag{4.17}$$

$$(1-\psi)\{(\alpha_2+\alpha_4)Y_{st}P_{1t} + \beta_2 Y_{1t}P_{1t} + \gamma_2 Y_{2t} + \delta_2 Y_{3t}P_{3t} + \omega(\bar{L}_{st} + \bar{L}_{1t})\} = P_{1t}C_{1t} + C_{2t} \tag{4.18}$$

$$(1-\psi)\{(\beta_3+\beta_4)P_{1t}Y_{1t} + \gamma_3 Y_{2t} + \delta_3 P_{3t}Y_{3t}\} + P_{3t}I_t = P_{3t}(I_{1t}+I_{2t}+I_{3t}) \tag{4.19}$$

$$C_{1t} \geq 1 \tag{4.20}$$

$$C_{2t} \geq 1 \tag{4.21}$$

In addition, the following definitions apply to variables appearing in (4.3)-(4.6):

$$G_{st} = \bar{G}_{s1} + \sum_{i=1}^{t-1} \bar{L}_{si} \tag{4.22}$$

$$G_{1t} = \bar{G}_{11} + \sum_{i=1}^{t-1} \bar{L}_{1i} \tag{4.23}$$

$$K_{1t} = \bar{K}_{11} + \sum_{i=1}^{t-1} I_{1i} \tag{4.24}$$

$$K_{2t} = \bar{K}_{21} + \sum_{i=1}^{t-1} I_{2i} \tag{4.25}$$

$$K_{3t} = \bar{K}_{31} + \sum_{i=1}^{t-1} I_{3i} \tag{4.26}$$

Many of these equations remain unchanged from Chapter II and are repeated at this point for convenience. The principal difference between this model and the decentralized model outlined in Chapter II involves the role of the government in the investment sector. The government now is assumed to have control over the expenditures to be made from two budgets, the tax budget (4.10) and the savings budget (4.19). Revenue or purchasing power can be transferred from the tax budget to the savings budget to be used for the purchase of capital goods. The amount of the transfer in each period is denoted as $P_{3t}I_t$. However, private savings (income earned on capital goods) cannot be transferred to the tax budget.

In every period, the government has control over the variables $\bar{L}_{st}$, $\bar{L}_{1t}$, I_t, I_{1t}, I_{2t} and I_{3t}. The placement of capital goods is no longer subject to the allocation rules outlined in Chapter II and expressed in (2.43) and (2.44). As a consequence, the government in this model has much more power and, hence, control over the development of the economy.

The changes in (4.9) and definitions (4.25) and (4.26) relative to their counterparts in Chapter II are self explanatory. The modification of the welfare function (4.1) is designed to provide an incentive to invest in productive capacity for the future by imputing a social value to the productive capacity bequeathed to subsequent generations.

The First-Order Conditions

The optimization of this model proceeds, as before, applying the Kuhn-Tucker optimality conditions to the Lagrangean function formed with (4.1) as the maximand and (4.2)-(4.21) as the constraints. The definitions

(4.22)-(4.26) are assumed to be eliminated by substitution but the variables defined are retained for notational convenience. Consequently, these equations do not appear in the Lagrangean function.

The Lagrangean function is not presented. Let X denote the Lagrangean multipliers and define $T = \tau-1$. The following first-order conditions result:

$$V_{C_1} = (\mu_1-2\mu_{11}C_1+\mu_{12}C_2)(1+\rho)^{-t} - X_7 - X_{18}\,P_1 + X_{20} = 0 \tag{4.27}$$

$$V_{C_2} = (\mu_2+\mu_{12}C_1-2\mu_{22}C_2)(1+\rho)^{-t} - X_8 - X_{18} + X_{21} = 0 \tag{4.28}$$

$$V_{Y_s} = -X_2 + X_7 + X_{10}P_1\psi(1-\alpha_1) - X_{11}P_1\alpha_1 + X_{18}P_1(1-\psi)(\alpha_2+\alpha_4) = 0 \tag{4.29}$$

$$V_{Y_1} = -X_3 + X_7 + P_1\{X_{10}\psi(1-\beta_1) - X_{12}\beta_1 + X_{15}\beta_2 + X_{18}\beta_2(1-\psi) + X_{19}(1-\psi)(\beta_3+\beta_4)\} = 0 \tag{4.30}$$

$$V_{Y_2} = -X_4 + X_8 + X_{10}\psi(1-\gamma_1) - X_{13}\gamma_1 + X_{16}\gamma_2 + X_{18}(1-\psi)\gamma_2 + X_{19}(1-\psi)\gamma_3 = 0 \tag{4.31}$$

$$V_{Y_3} = -X_5 + X_9 + P_3\{X_{10}\psi(1-\delta_1) - X_{14}\delta_1 + X_{17}\delta_2 + X_{18}(1-\psi)\delta_2 + X_{19}(1-\psi)\delta_3\} = 0 \tag{4.32}$$

$$V_{F_s} = X_2\alpha_1Y_s/F_s - X_8 + X_{11} = 0 \quad (t=1, \ldots, \tau-1) \tag{4.33}$$

$$V_{F_1} = X_3\beta_1Y_1/F_1 - X_8 + X_{12} = 0 \quad (t=1, \ldots, \tau-1) \tag{4.34}$$

$$V_{F_2} = X_4\gamma_1Y_2/F_2 - X_8 + X_{13} = 0 \quad (t=1, \ldots, \tau-1) \tag{4.35}$$

$$V_{F_3} = X_5\delta_1Y_3/F_3 - X_8 + X_{14} = 0 \quad (t=1, \ldots, \tau-1) \tag{4.36}$$

$$V_{L_s} = X_2\alpha_2 Y_s/L_s - X_6 = 0 \quad (t=1, \ldots, \tau-1) \tag{4.37}$$

$$V_{L_1} = X_3\beta_2 Y_1/L_1 - X_6 - X_{15}\omega = 0 \quad (t=1, \ldots, \tau-1) \tag{4.38}$$

$$V_{L_2} = X_4\gamma_2 Y_2/L_2 - X_6 - X_{16}\omega = 0 \quad (t=1, \ldots, \tau-1) \tag{4.39}$$

$$V_{L_3} = X_5\delta_2 Y_3/L_3 - X_6 - X_{17}\omega = 0 \quad (t=1, \ldots, \tau-1) \tag{4.40}$$

$$\begin{aligned} V_{P_1} = {} & X_{10}\psi\{Y_s(1-\alpha_1) + Y_1(1-\beta_1)\} - X_{11}\alpha_1 Y_s - X_{12}\beta_1 Y_1 \\ & + X_{15}\beta_2 Y_1 + X_{18}[(1-\psi)\{(\alpha_2+\alpha_4)Y_s + \beta_2 Y_1\} - C_1] \\ & + X_{19}(1-\psi)(\beta_3+\beta_4)Y_1 = 0 \quad (t=1, \ldots, \tau-1) \end{aligned} \tag{4.41}$$

$$\begin{aligned} V_{P_3} = {} & X_{10}\{\psi(1-\delta_1)Y_3 - I\} - X_{14}\delta_1 Y_3 + X_{17}\delta_2 Y_3 + X_{18}(1-\psi)\delta_2 Y_3 \\ & + X_{19}\{(1-\psi)\delta_3 Y_3 + I - I_1 - I_2 - I_3\} = 0 \quad (t=1, \ldots, \tau-1) \end{aligned} \tag{4.42}$$

$$V_I = P_3(X_{19} - X_{10}) \leq 0; \; IV_I = 0; \; I \geq 0 \tag{4.43}$$

$$\begin{aligned} V_{\bar{L}_{st}} = {} & \lambda\theta P_{1\tau}\sigma_s G_{sT}^{\lambda-1} F_{s\tau}^{\alpha_1} L_{s\tau}^{\alpha_2} + \lambda \sum_{i=t+1}^{\tau} (X_{2i}Y_{si}/G_{si}) - X_{6t} \\ & + \omega(1-\psi)(X_{18t} - X_{10t}) \leq 0; \; \bar{L}_{st}V_{\bar{L}_{st}} = 0; \; \bar{L}_{st} \geq 0 \end{aligned} \tag{4.44}$$

$$\begin{aligned} V_{\bar{L}_{1t}} = {} & \lambda\theta P_{1\tau}\sigma_1 G_{1T}^{\lambda-1} F_{1\tau}^{\beta_1} L_{1\tau}^{\beta_2} K_{1T}^{\beta_3} + \lambda \sum_{i=t+1}^{\tau} (X_{3i}Y_{1i}/G_{1i}) - X_{6t} \\ & + \omega(1-\psi)(X_{18t} - X_{10t}) \leq 0; \; \bar{L}_{1t}V_{\bar{L}_{1t}} = 0; \; \bar{L}_{1t} \geq 0 \end{aligned} \tag{4.45}$$

$$\begin{aligned} V_{I_{1t}} = {} & \beta_3\theta P_{1\tau}\sigma_1 G_{1T}^{\lambda} F_{1\tau}^{\beta_1} L_{1\tau}^{\beta_2} K_{1T}^{\beta_3-1} + \beta_3 \sum_{i=t+1}^{\tau} (X_{3i}Y_{1i}/K_{1i}) - X_{9t} \\ & - X_{19t}P_{3t} \leq 0; \; I_{1t}V_{I_{1t}} = 0; \; I_{1t} \geq 0 \end{aligned} \tag{4.46}$$

$$V_{I_{2t}} = \gamma_3\theta(1+\varepsilon)^T\sigma_2 F_{2\tau}^{\gamma_1}L_{2t}^{\gamma_2}K_{2T}^{\gamma_3-1} + \gamma_3 \sum_{i=t+1}^{\tau}(X_{4i}Y_{2i}/K_{2i}) - X_{9t}$$

$$- X_{19t}P_{3t} \leq 0;\ I_{2t}V_{I_{2t}} = 0;\ I_{2t} \geq 0 \qquad (4.47)$$

$$V_{I_{3t}} = \delta_3\theta P_{3\tau}(1+\varepsilon)^T\sigma_3 F_{3\tau}^{\delta_1}L_{3\tau}^{\delta_2}K_{3T}^{\delta_3-1} + \delta_3 \sum_{i=t+1}^{\tau}(X_{5i}Y_{3i}/K_{3i}) - X_{9t}$$

$$- X_{19}P_{3t} \leq 0;\ I_{3t}V_{I_{3t}} = 0;\ I_{3t} \geq 0 \qquad (4.48)$$

The following special conditions apply to the final period of the plan.

$$V_{F_{3\tau}} = \theta P_{1\tau}\alpha_1\sigma_s G_{sT}^{\lambda}F_{s\tau}^{\alpha_1-1}L_{s\tau}^{\alpha_2} - \theta + X_{2\tau}\alpha_1 Y_{s\tau}/F_{s\tau} - X_{8\tau} + X_{11\tau} = 0 \qquad (4.33a)$$

$$V_{F_{1\tau}} = \theta P_{1\tau}\beta_1\sigma_1 G_{1T}^{\lambda}F_{1\tau}^{\beta_1-1}L_{1\tau}^{\beta_2}K_{1T}^{\beta_3} - \theta + X_{3\tau}\beta_1 Y_{1\tau}/F_{1\tau}$$

$$- X_{8\tau} + X_{12\tau} = 0 \qquad (4.34a)$$

$$V_{F_{2\tau}} = \theta\gamma_1(1+\varepsilon)^T\sigma_2 F_{2\tau}^{\gamma_1-1}L_{2\tau}^{\gamma_2}K_{2T}^{\gamma_3} - \theta + X_{4\tau}\gamma_1 Y_{2\tau}/F_{2\tau} - X_{8\tau}$$

$$+ X_{13\tau} = 0 \qquad (4.35a)$$

$$V_{F_{3\tau}} = \theta P_{3\tau}\delta_1(1+\varepsilon)^T\sigma_3 F_{3\tau}^{\delta_1-1}L_{3\tau}^{\delta_2}K_{3T}^{\delta_3} - \theta + X_{5\tau}\delta_1 Y_{3\tau}/F_{2\tau} - X_{8\tau}$$

$$+ X_{14\tau} = 0 \qquad (4.36a)$$

$$V_{L_{s\tau}} = \theta P_{1\tau}\alpha_2\sigma_s G_{sT}^{\lambda}F_{s\tau}^{\alpha_1}L_{s\tau}^{\alpha_2-1} + X_{2\tau}\alpha_2 Y_{s\tau}/L_{s\tau} - X_{6\tau} = 0 \qquad (4.37a)$$

$$V_{L_{1\tau}} = \theta P_{1\tau}\beta_2\ \sigma_1 G_{1T}^{\lambda}F_{1\tau}^{\beta_1}L_{1\tau}^{\beta_2-1}K_{1T}^{\beta_3} + X_{3\tau}\beta_2 Y_{1\tau}/L_{1\tau} - X_{6\tau}$$

$$- X_{15\tau}\omega = 0 \qquad (4.38a)$$

$$V_{L_{2\tau}} = \theta\gamma_2(1+\varepsilon)^T\sigma_2 F_{2\tau}^{\gamma_1}L_{2\tau}^{\gamma_2-1}K_{2T}^{\gamma_3} + X_{4\tau}\gamma_2 Y_{2\tau}/L_{2\tau} - X_{6\tau}$$

$$- X_{16\tau}\omega = 0 \qquad (4.39a)$$

$$V_{L_{3\tau}} = \theta\delta_2(1+\varepsilon)^T\sigma_3 F_{3\tau}^{\delta_1} L_{3\tau}^{\delta_2-1} K_{3T}^{\delta_3} + X_5\delta_2 Y_{3\tau}/L_{3\tau} - X_{6\tau}$$

$$- X_{17\tau}\omega = 0 \tag{4.40a}$$

$$V_{P_{1\tau}} = \theta(\sigma_s G_{sT}^{\lambda} F_{s\tau}^{\alpha_1} L_{s\tau}^{\alpha_2} + \sigma_1 G_{1T}^{\lambda} F_{1\tau}^{\beta_1} L_{1\tau}^{\beta_2} K_{1T}^{\beta_3}) + X_{10\tau}\psi\{Y_{st}(1-\alpha_1) + Y_{1t}(1-\beta_1)\}$$

$$- X_{11\tau}\alpha_1 Y_{s\tau} - X_{12\tau}\beta_1 Y_{1\tau} + X_{15\tau}\beta_2 Y_{1\tau} + X_{18\tau}\{(1-\psi)[(\alpha_2+\alpha_4)Y_{s\tau}$$

$$+ \beta_2 Y_{1\tau}] - C_{1\tau}\} + X_{19\tau}(1-\psi)(\beta_3+\beta_4)Y_{1\tau} = 0 \tag{4.41a}$$

$$V_{P_{3\tau}} = \theta(1+\varepsilon)^T\sigma_3 F_{3\tau}^{\delta_1} L_{3\tau}^{\delta_2} K_{3T}^{\delta_3} + X_{10\tau}\{\psi(1-\delta_1)Y_{3\tau} - I_\tau\} - X_{14\tau}\delta_1 Y_{3\tau}$$

$$+ X_{17\tau}\delta_2 Y_{3\tau} + X_{18\tau}(1-\psi)\delta_2 Y_{3\tau} + X_{19\tau}\{(1-\psi)\delta_3 Y_{3\tau} + I_\tau - I_{1\tau}$$

$$- I_{2\tau} - I_{3\tau}\} = 0 \tag{4.42a}$$

To avoid confusion with the first-order conditions presented in Chapter III, the letter X is used to denote the Lagrangean multipliers. As before, the subscripts on the Lagrangean multipliers indicate the equations and time period with which they are associated. The remainder of this chapter is devoted to an analysis of the economic implications of these first-order conditions.

SOC Accumulation

In any period t, if it is desirable for the government to invest in SOC in the subsistence sector, then from (4.44) we have the result that

$$\lambda\theta P_{1\tau}\sigma_s G_{s,\tau+1}^{\lambda-1} F_{s\tau}^{\alpha_1} L_{s\tau}^{\alpha_2} + \lambda \sum_{i=t+1}^{\tau} (X_{2i} Y_{si}/G_{si}) = (X_{10t} - X_{18t})(1-\psi)\omega + X_{6t}, \tag{4.44a}$$

where X_{2i} represents the social marginal value of additional subsistence agricultural production in period $i > t$, X_{18t} is the marginal social

value of additional consumer income generated in period t by employing labor in SOC accumulation, and X_{6t} and X_{10t} represent the social opportunity costs of labor and government purchasing power, respectively.

Comparing (4.44a) with its analogue (3.25) obtained for the decentralized model discussed in Chapters II and III, it becomes apparent that the only difference between the two is that the first term in (4.44a) is absent from (3.25). This first term represents the value society places on the marginal value productivity of SOC in post-plan productive capacity in the subsistence sector. Since the value of this term is positive, it appears that the likelihood that it would be socially desirable to invest in SOC in sector s is greater when capacity is given a positive value than in the case of the decentralized economy model where the social value of terminal productive capacity is not taken into account. However, this is not necessarily true since a positive value is placed on all post-plan productive capacity. The net result is that the social opportunity costs associated with the use of resources to accumulate SOC will also increase.

Turning now to the commercial agricultural sector, the condition which must be satisfied if $\bar{L}_{1t}$ is to be positive is

$$\lambda\theta P_{1\tau}\sigma_1 G_{1,\tau+1}^{\lambda-1} F_{1\tau}^{\beta^1} L_{1\tau}^{\beta^2} K_{1,\tau+1}^{\beta^3} + \lambda \sum_{i=t+1}^{\tau} (X_{3i} Y_{1i}/G_{1i}) = X_{6t}$$

$$+ \omega(1-\psi)(X_{10t} - X_{18t}). \qquad (4.45a)$$

Comparing this condition with (4.44a), we see that society is indifferent between the post-terminal marginal productivity of SOC of the two agricultural sectors since the same valuation ($\theta P_{1\tau}$) is applied to both

sectors.

Some simplifying assumptions and notation

To simplify notation in the remainder of this section, let $T = \tau+1$ and define the following variables:

$$\sigma_1 G_{1T}^{\lambda-1} F_{1\tau}^{\beta_1} L_{1\tau}^{\beta_2} K_{1T}^{\beta_3} = Y_{1T}/G_{1T} \tag{4.49}$$

$$\sigma_s G_{sT}^{\lambda-1} F_{s\tau}^{\alpha_1} L_{s\tau}^{\alpha_2} = Y_{sT}/G_{sT} \tag{4.50}$$

and

$$X_{2T} = P_{1\tau}\theta = X_{3T}. \tag{4.51}$$

Making the appropriate substitutions into (4.44a) and (4.45a) we get[1]

$$\lambda \sum_{i=t+1}^{T} (X_{2i}Y_{si}/G_{si}) = X_{6t} + (X_{10t} - X_{18t})(1-\psi)\omega \tag{4.52}$$

and

$$\lambda \sum_{i=t+1}^{T} (X_{3i}Y_{1i}/G_{1i}) = X_{6t} + (X_{10t} - X_{18t})(1-\psi)\omega. \tag{4.53}$$

From (4.52) and (4.53) and the accompanying footnote, it is apparent that the decision to invest in SOC in either the subsistence or commercial agricultural sector depends on which of two weighted sums of two sets of ratios is larger. These ratios are the output/SOC ratios in each sector. Further, the weights applied to the ratios of the two sectors in each

---

[1] Suppose that the planning horizon is extended to $\tau+1$ periods. This would result in values for F_{ST} and L_{ST} being "competitively" determined along with a corresponding output of Y_{ST}. If it is assumed that $F_{ST} = F_{s\tau}$ and $L_{ST} = L_{s\tau}$, then the variable defined in (4.50) is approximately equal to Y_{ST} as it would be competitively determined. The same considerations apply to (4.49).

period are the same. That is,

$$X_{2t} = X_{3t} \quad (t=1, \ldots, \tau+1) \tag{4.54}$$

since X_{2t} is the marginal social value of agricultural production in the subsistence sector while X_{3t} is the same quantity in the commercial agricultural sector. These two quantities must be equal since agricultural goods produced by these two sectors are perfect substitutes in consumption. Thus, deciding whether or not to invest in either subsistence or commercial agricultural SOC (or both) involves a comparison of two sets of ratios, Y_{1i}/G_{1i} and Y_{si}/G_{si} $(i = t+1, \ldots, \tau+1)$. These two sets of ratios and their influences on the two sums in (4.52) and (4.53) are the subject of much of the remainder of this section.

One of the characteristics of dual economies is that a substantial portion of the labor force is usually employed in subsistence agriculture and $L_{st} > L_{1t}$. Since the total labor supply is assumed to be fixed and perfectly inelastic,[1] and since L_{st} is a residual it follows that as the economy develops[2] the supply of labor available to be employed in the subsistence sector declines, or $L_{s,t+i} < L_{st}$, $i > 0$. Assuming for the moment that the terms of trade (TT) between agricultural and manufactured goods remain constant and that no investment in subsistence SOC occurs in the first t periods (that is, $\bar{L}_{si} = 0$, $i=1, \ldots, t$), then

$$Y_{s1}/G_{s1} \geq Y_{si}/G_{si} \quad (i=2, \ldots, t) \tag{4.55}$$

---

[1] These assumptions are relaxed in Chapter VI.

[2] That is, as capital accumulates in the other sectors.

since $G_{s1} = G_{si}$ and $Y_{s1} \geq Y_{si}$ because $L_{si} \leq L_{s1}$. From (4.11) and the assumption of constant TT, the effect of purchased manufactured inputs cannot offset the effect of the decrease in the labor employed in the subsistence sector.

Turning now to the commercial agricultural sector, assume constant TT and no investment in SOC in the first t periods. Thus $G_{1i} = G_{11}$ since $\bar{L}_{1i} = 0$, $i = 1, \ldots, t$. If there has been no investment in private capital in the agricultural sector in the first t periods (that is, $I_{1i} = 0$, $i = 1, \ldots, t$), then $K_{1,t+1} = K_{11}$. Combining the assumptions of no private or public investment in the first t periods with the constant terms of trade assumption implies that $L_{11} = L_{1i}$ and $F_{11} = F_{1i}$, and therefore,

$$Y_{11}/G_{11} = Y_{1i}/G_{1i} \; ; \; (i=2, \ldots, t). \tag{4.56}$$

The results in (4.55) and (4.56) suggest that the absolute <u>rate</u> of decline of the social value of subsistence SOC diminishes over time relative to the absolute rate of decline of the social value of commercial SOC. This can be demonstrated as follows. Define the two sums in (4.52) and (4.53) as

$$A_t = \sum_{i=t+1}^{\tau+1} (X_{2i}Y_{si}/G_{si}) \tag{4.57}$$

and

$$B_t = \sum_{i=t+1}^{\tau+1} (X_{3i}Y_{1i}/G_{1i}). \tag{4.58}$$

The absolute rates of decline of these sums between periods t-1 and t are

$$A_{t-1} - A_t = X_{2t}Y_{st}/G_{st} \tag{4.59}$$

and

$$B_{t-1} - B_t = X_{3t}Y_{1t}/G_{1t} \tag{4.60}$$

Forming a ratio of these differences and examining the ratio over time, we see that for $i > t$

$$\frac{(X_{2t}Y_{st}/G_{st})}{(X_{3t}Y_{1t}/G_{1t}} \geq \frac{(X_{2i}Y_{si}/G_{si})}{(X_{3i}Y_{1i}/G_{1i})}, \tag{4.61}$$

with the strict inequality holding if L_{st} declines over time. The significance of (4.61) is discussed after the implications of some of the foregoing simplifying assumptions are examined.

Relaxing the simplifying assumptions

Relaxing the assumption that no investment has taken place in private capital in the commercial agriculture sector merely augments the result expressed in (4.61). If investment occurs in commercial agriculture, then (4.56) is modified to become

$$Y_{11}/G_{11} < Y_{1i}/G_{1i} \; ; \; (i=2, \ldots, t). \tag{4.56a}$$

Next, relaxing the assumption that the TT are constant and assuming the TT move in favor of agriculture ($P_{1,t+i} > P_{1t}$, $i > 0$) has a similar effect on (4.56) since at the higher prices more commercial agricultural production will be forthcoming. However, changing of the TT over time has an additional influence on the ratios in (4.61) via the response of subsistence production to price changes. If the subsistence response is perverse,[1] this would tend to augment the inequality expressed in (4.55)

[1] See the discussion of supply response in Chapter II.

and, consequently also contribute to the decline of the ratios in (4.61). On the other hand, if supply response is positive, this would tend to offset the influence of the natural outflow of labor from the subsistence sector as the "rest of the economy develops". For present purposes, assume that if the supply response is positive, this positive response is not sufficient to offset the effect of the outflow of labor. Thus, even if the TT move in favor of agriculture, Y_{si} will decline in the absence of investment in subsistence SOC.

The one remaining possibility is the case where the TT move against the agricultural sectors. Retaining the assumption of no investment in SOC, consider first the case where there is no investment in private capital in the commercial agricultural sector. If there is no investment in agriculture and the price of agricultural goods declines, the output of agricultural goods must fall by the nature of the aggregate supply response in these sectors. Not only is this unlikely to occur because of the nature of the relative marginal social utilities discussed in Chapter II, but the possibility of aggregate agricultural production falling below the initial output level is explicitly excluded by (4.20). Therefore, if the price of agricultural goods declines this decline must be the <u>result</u> of expanded production and not the <u>cause</u> of decreased output. Expanded output of agricultural goods concurrent with declining prices can occur <u>only if</u> there is investment in either SOC or in private commercial capital goods. Thus, if the TT are moving against the agricultural sector and there hasn't been any investment in SOC, then there must be investment in private commercial agricultural capital. This means that aggregate

production is increasing in the face of declining prices. In this situation, Y_{st}/G_{st} must be declining while Y_{1t}/G_{1t} is increasing. This is precisely the same set of results that are obtained under the assumptions of private investment with constant TT and thus the results are the same as in (4.61).

The significance of A_t and B_t

Turning now to the implications of (4.61), this inequality suggests that the absolute rate of decline of A_t over time decreases relative to the absolute rate of decline of B_t. Assume again, for the moment, that the TT are constant and no investment is occurring in private capital in the commercial agricultural sector.[1] Assume further that $X_{2t} = X_{3t}$ is constant over time.[2] These assumptions suggest that B_t declines at a constant absolute rate while the absolute rate of decline of A_t decreases.

Plotting A_t and B_t on a graph (where time is treated as a continuum) leads to six possibilities, five of which are shown on Figure 4.1. These five possibilities are as follows: (1) A_t is always above B_t and the curves do not cross; (2) B_t is always above A_t and the curves do not cross; (3) A_t crosses B_t once from below; (4) A_t crosses B_t once from above, and; (5) A_t crosses B_t twice, first from above and then from below. The sixth possibility is that the curves touch (become tangent) but do not cross.

---

[1] This is the case where (4.56) holds rather than (4.56a).

[2] These assumptions are relaxed currently.

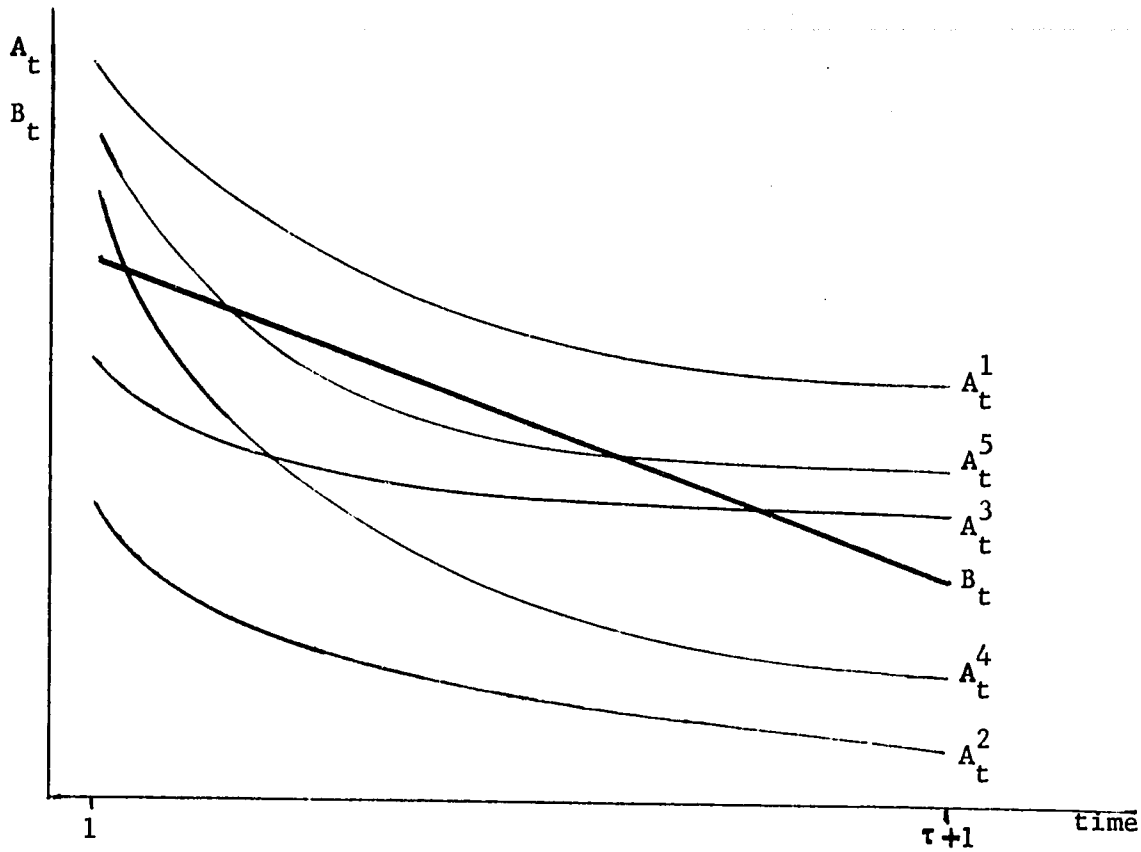

Figure 4.1. A_t and B_t with assumptions of no investment and constant TT

Relaxing the assumption about investing in private commercial agriculture and allowing the TT to move in favor of agricultural goods merely has the effect of allowing Y_{1t}/G_{1t} to increase over time and the influence of (4.56a) replaces (4.56) in determining the rates of decline expressed in (4.61). Graphically, this simply has the effect of bending the straight line B_t so that it becomes strictly concave downward. The net result is that the range of possibilities with respect to crossing combinations remains unchanged. Furthermore, it is asserted that relaxing the assumption that $X_{2t} = X_{3t}$ is constant has no essential influence on

the nature of the crossing possibilities since allowing these values to vary over time simply changes the curvature of the two curves and does not alter the number of crossing possibilities.

Turning now to the significance of these curves, recall that the object of this exercise is to determine whether SOC investment will occur in any period t, and, if so, whether it will be in the subsistence sector, the commercial sector, or both. The criterion involved in this decision is the magnitude of λA_t and λB_t relative to the social opportunity cost of using government funds in alternative uses as expressed in (4.52) and (4.53). In terms of Figure 4.1, this means that if the social opportunity cost in any one period is sufficiently low, then investment may occur in one or both of the SOC alternatives. The case where it is socially desirable to invest in commercial SOC is illustrated in Figure 4.2, where C_t denotes the net social opportunity cost as defined by the right hand side of (4.52) or (4.53). The A_t and B_t curves represent only one of the possibilities with respect to relative locations. At time $t = t'$, the social benefit to be derived (at the margin) from investing in SOC in commercial agriculture exceeds that of investing in subsistence SOC. If, as illustrated, the value of $C_{t'}$ lies between $B_{t'}$ and $A_{t'}$, then it is socially desirable to invest in commercial SOC but not in subsistence SOC in period t'. If $C_{t'}$ was less than $A_{t'}$, then it would be desirable to invest in SOC in both sectors. These considerations exemplify the importance of the relative location of the A_t and B_t curves.

In discussing the possible shapes of the two curves it was assumed that no investment in SOC would take place. When this assumption is

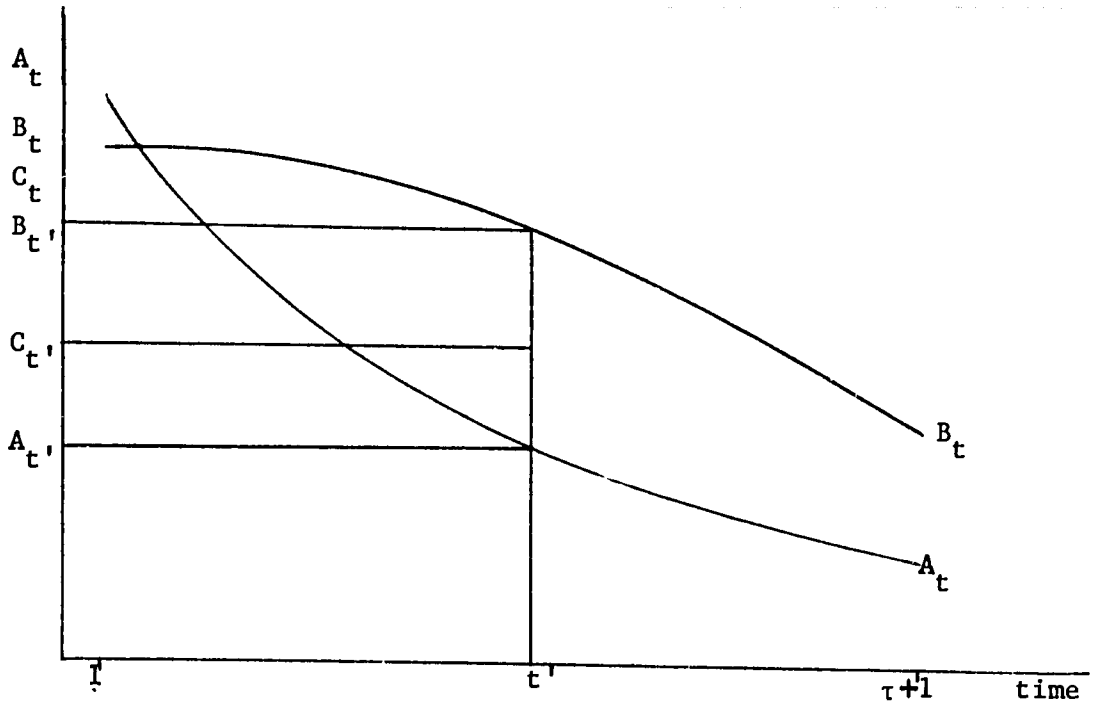

Figure 4.2. The decision to invest in SOC

relaxed, the problem becomes slightly more complicated since the curves begin to shift. Consider the following case which is illustrated for time t' in Figure 4.2. Given the positions of the A_t and B_t curves relative to $C_{t'}$, it is desirable to invest in commercial SOC in period t'. However, such an investment shifts the location of the B_t curve since, by definition, B_t is a weighted average of the ratio of commercial production to commercial SOC. Increasing the value of the denominator in this ratio tends to shift the curve downwards. However, the downward influence is partially offset by the increase in the output of commercial agriculture (the numerator of the ratio) associated with the increased SOC and the correspondingly higher level of purchased manufactured and labor inputs. The net effect is that the ratio Y_{1t}/G_{1t} must fall if G_{1t} is increased

because of the diminishing marginal productivity of SOC.

Expanded commercial sector SOC has a further downward influence on B_t. Expanded agricultural output results in a decline in the marginal social value of agricultural goods in all subsequent periods, and it is this value (X_{3t}) which forms the weights in B_t. Since the marginal social value of agricultural output is the same for the commercial and subsistence sectors, investment in commercial SOC also tends to shift the A_t curve downward.

Turning now to the question of the extent of the downward shift, B_t must continue to shift downward until the value of $B_{t'}$ falls to the level $C_{t'}$. This is apparent from (4.53). If there are sufficient government funds available to drive $B_{t'}$ as low as $A_{t'}$, then simultaneous investment in both subsistence and commercial SOC becomes socially desirable. Thus, if in any period t, investment occurs in both $G_{s,t+1}$ and $G_{1,t+1}$, then $A_t = B_t$ as is apparent from (4.52) and (4.53).

<u>Economic considerations influencing the desirability of investing in subsistence versus commercial SOC</u>

Having discussed the general shape and the importance of the relative locations of the A_t and B_t curves, we now examine the economic factors which determine the relative locations of these curves and attempt to isolate features of dualistic economies which would tend to make one curve lie above (or below) the other. In discussing the determinants of the location of these curves, it is preferable to start with the terminal period of the plan (τ) and working towards the start of the planning period since the value of A_t includes all of the terms of A_{t+i}

($i > 0$) plus some additional terms.

Letting $T = \tau+1$, it is apparent from (4.49)-(4.51), (4.58) and (4.59) that

$$A_\tau = P_{1\tau}\theta\sigma_s G_{1T}^{\lambda-1} F_{s\tau}^{\alpha_1} L_{s\tau}^{\alpha_2} \tag{4.57a}$$

and

$$B_\tau = P_{1\tau}\theta\sigma_1 G_{1T}^{\lambda-1} F_{1\tau}^{\beta_1} L_{1\tau}^{\beta_2} K_{1T}^{\beta_3}. \tag{4.58a}$$

It is the relative magnitudes of these two terms which determines the relative values of the ordinates corresponding to the abscissa value of $\tau+1$ for the two curves A_t and B_t in Figures 4.1 and 4.2. Since for present purposes we are only interested in relative magnitudes, the common factors $P_{1\tau}\theta$ can be ignored.

Recalling the definitions of the production function intercepts from Chapter II, we have $\sigma_s = \bar{\sigma}_s B_s^{\alpha_4}$ and $\sigma_1 = \bar{\sigma}_1 B_1^{\beta_4}$, where B_s and B_1 are the quantities of land in the subsistence and commercial agricultural sectors, respectively. The relative size of B_s and B_1 unquestionably varies greatly from country to country. However, the portion of the land that is farmed by mechanized means in many of the underdeveloped countries is small relative to that which is farmed by traditional means. Since the land in the traditional sector is frequently more intensively farmed than land that which is on plantations, it was assumed in Chapter II that the productivity of land in the subsistence sector was higher than in the commercial sector. Another interpretation is that the share of the output attributable to land (α_4) is larger in the subsistence sector than the portion attributable to land in the commercial sector (β_4). Based on

these assumptions, we have

$$B_s^{\alpha_4} > B_1^{\beta_4}. \tag{4.62}$$

To the extent that the commercial sector uses more modern and, hence, more productive techniques than the subsistence sector, the influence of land will be offset to some extent by the larger "index of technology". In other words, it is likely that $\bar{\sigma}_s < \bar{\sigma}_1$ because more modern and efficient practices are being used on the commercial farms. An additional offsetting factor is the influence of mechanization in the commercial sector. This influence is represented by $K_{1T}^{\beta_3}$. From (2.21) and (2.23) we have $\beta_2 Y_{1t}/L_{1t} > (\alpha_2+\alpha_4)Y_{st}/L_{st}$, and since $\beta_2 < (\alpha_2+\alpha_4)$ it follows that $Y_{1t}/L_{1t} > Y_{st}/L_{st}$. Even though it is assumed that $L_{st} > L_{1t}$, since $\alpha_2 < \beta_2$ it is impossible to determine on the basis of these assumptions whether $L_{st}^{\alpha_2}$ exceeds $L_{1t}^{\beta_2}$ in any particular period. Finally, from (4.11) and (4.12) and the assumption that $\alpha_1 = \beta_1$, it follows that $Y_{1t}/F_{1t} = Y_{st}/F_{st}$. Consequently the magnitudes of $F_{st}^{\alpha_1}$ and $F_{1t}^{\beta_1}$ are proportional to the relative magnitudes of Y_{st} and Y_{1t}.

Bringing all these considerations together, it follows that the larger the relative size of the subsistence labor force relative to the commercial agricultural labor force, the larger A_τ will be relative to B_τ. Similarly, the larger $B_s^{\alpha_4}$ relative to $B_1^{\beta_4}$, the larger A_τ will tend to be relative to B_τ. Counterbalancing these two items, the larger the capital stock in commercial agriculture (K_{1T}) and the greater the disparity between the productivity of subsistence and commercial techniques ($\bar{\sigma}_s$ versus $\bar{\sigma}_1$), the larger B_τ will tend to be relative to A_τ. The influence of purchased inputs varies with the relative size (measured in

terms of output) of the two sectors. Thus, the relative values of A_τ and B_τ vary directly with the relative sizes of all the foregoing factors. The only exception is the size of G_{sT} compared with G_{1T}. The relative sizes of A_τ and B_τ vary inversely with the relative quantities of SOC available in the two sectors.

Why all the concern over A_τ and B_τ since these are terminal values and no further investment in SOC can occur during the plan? The reason is that A_τ and B_τ form the base for all earlier values of A_t and B_t. This becomes obvious when $A_{\tau-1}$ and $B_{\tau-1}$ are considered. We have from (4.59) for the subsistence sector that

$$A_{\tau-1} = X_{2\tau}Y_{s\tau}/G_{s\tau}+A_\tau, \tag{4.57b}$$

and from (4.60) for the commercial sector we have

$$B_{\tau-1} = X_{3\tau}Y_{1\tau}/G_{1\tau}+B_\tau. \tag{4.58b}$$

Thus, the larger A_τ relative to B_τ, the larger $A_{\tau-1}$ will be relative to $B_{\tau-1}$. In comparing the two additional terms in (4.57b) and (4.58b), the same factors of components have the same influence as in A_τ and B_τ. This becomes obvious when these terms are rewritten as

$$Y_{s\tau}/G_{s\tau} = \bar{\sigma}_s G_{s\tau}^{\lambda-1} F_{s\tau}^{\alpha_1} L_{s\tau}^{\alpha_2} B_{s\tau}^{\alpha_4} \tag{4.63}$$

and

$$Y_{1\tau}/G_{1\tau} = \bar{\sigma}_1 G_{1\tau}^{\lambda-1} F_{1\tau}^{\beta_1} L_{1\tau}^{\beta_2} K_{1\tau}^{\beta_3} B_1^{\beta_4} \tag{4.64}$$

Finally, replacing τ by t in (4.63) and (4.64) it is obvious that the same variables and parameters have similar influences throughout the entire period.

Summary and conclusions

In summary, the following conclusions appear to be relevant in consideration of the relative desirability of investing in subsistence or commercial sector SOC. (1) The larger the total labor force, L_o, relative to the resource base of the economy (land and fixed capital stock) the relatively more desirable it is to invest in subsistence SOC. (2) The larger the proportion of the total land base used for subsistence forms of production, the more attractive investment in subsistence SOC becomes relative to investment in commercial sector SOC. (3) There is a certain amount of complementarity between investing in private capital in the commercial sector and the desirability of investing in G_1. In other words, private investment in K_1 tends to make investment in G_1 more desirable. (4) To the extent that the commercial sector employs more modern and more productive techniques than the subsistence sector, it will be relatively more desirable to invest in G_1 rather than G_s. (5) Investment in either G_1 or G_s in any period tends to reduce the relative desirability of investing in SOC in that sector in subsequent periods. (6) Finally, it is impossible to determine a priori whether it is more desirable to develop subsistence or commercial agriculture or which should be developed first.

The discussion throughout this entire section has been conducted in terms of the relative desirability of choosing between two alternatives. At no point was investing in G_s rather than G_1 (or vice versa) advocated. This decision cannot be made in the absence of data on the magnitudes of the various parameters and variables. Furthermore, the discussion in this

section almost completely abstracted from consideration of the social opportunity costs involved. As indicated above, the decision in any one period will depend on the relative magnitude of λA_t, λB_t, and the social opportunity cost of using government tax revenue for SOC accumulation. One of the major factors influencing this social opportunity cost is discussed in the following section. Specifically, this factor is the social desirability of transferring tax revenue to the private savings budget. This social desirability depends directly on the private investment opportunities available.

Private Capital Accumulation

The allocation of private investment funds in this model is governed by the criterion of social desirability. This criterion differs from the criterion used in the decentralized model of maximization of the expected income earned on the capital stock in the subsequent period. The application of the social desirability criterion to the investment alternatives is summarized in the first-order conditions (4.46)-(4.48). The social desirability of transferring revenue from the tax budget to the private savings budget is summarized in condition (4.43). The problem of transferring these funds is deferred until a later section. This section contains a discussion of the allocation of private investment funds. The method of analysis is similar to that employed in the previous section on SOC accumulation.

The relative social desirability of investment alternatives

To simplify the analysis notation similar to that used in the previous section is introduced. Letting $T = \tau+1$, define

$$X_{4T} = \theta, \tag{4.65}$$

$$X_{5T} = P_{s\tau}\theta, \tag{4.66}$$

$$\sigma_2(1+\varepsilon)^T F_{2\tau}^{\gamma_1} L_{2\tau}^{\gamma_2} K_{2T}^{\gamma_3-1} = Y_{2T}/K_{2T}, \tag{4.67}$$

and

$$\sigma_3(1+\varepsilon)^T F_{3\tau}^{\delta_1} L_{3\tau}^{\delta_2} K_{3T}^{\delta_3-1} = Y_{3T}/K_{3T}. \tag{4.68}$$

Using this notation and the definitions of X_{3T} and Y_{1T} in (4.49) and (4.51), we can rewrite parts of the conditions in (4.46)-(4.48) in simplified form as

$$\beta_3 \sum_{i=t+1}^{T} (X_{3i}Y_{1i}/K_{1i}) \leq X_{9t} + X_{19t}P_{3t} \tag{4.46a}$$

$$\gamma_3 \sum_{i=t+1}^{T} (X_{4i}Y_{2i}/K_{2i}) \leq X_{9t} + X_{19t}P_{3t} \tag{4.47a}$$

and

$$\delta_3 \sum_{i=t+1}^{T} (X_{si}Y_{3i}/K_{3i}) \leq X_{9t} + X_{19t}P_{3t} \tag{4.48a}$$

The remainder of the conditions in (4.46) require that if investment in $K_{1,t+1}$ is to be desirable in period t, (i.e., it is deemed desirable for I_{1t} to be positive) then the LHS of (4.46a) must be equal in magnitude to the RHS of (4.46a). In other words, if investment is socially desirable in period t, then the discounted present marginal social value productivity of private capital in commercial agriculture in all successive periods plus the social value of post-plan productive capacity must be

equal to the social opportunity costs of using investment goods and private savings in this manner. Similar interpretations apply to (4.47a) and (4.48a).

Economic factors affecting private investment

Making detailed comparisons among the desirability of the three private investment alternatives is more difficult than analyzing the two alternatives available for investment in SOC. This enhanced difficulty results from the greater asymmetry involved in the choices among the private investment alternatives. One troublesome aspect of this asymmetry is that the products produced by the three sectors all have their own marginal social value. Thus, comparison among physical characteristics is no longer sufficient as in the decision between investing in either G_1 or G_s. The relative values of X_{3t}, X_{4t}, and X_{5t} must be considered in comparing the relative magnitudes of the LHS of (4.64a)-(4.48a).

The allocation of the private savings among the three alternative sectors requires that investment must occur in at least one of these sectors in every period. This differs from the problem of deciding between G_1 or G_2 for SOC investment. In the allocation of government funds it was possible that investment might not occur in either G_1 or G_s in a particular period since the entire tax budget could be transferred to the private savings fund and used to accumulate private capital. No similar transfer option is possible for private savings. Consequently capital must be accumulated in at least one sector. Thus, the social opportunity cost of placing capital $(X_{9t} + X_{19t}P_{3t})$ cannot exceed the

largest of the terms on the LHS of conditions (4.46a)-(4.48a). If investment occurs in more than one sector, the values of the LHS of the conditions (4.46a)-(4.48a) corresponding to these sectors must be equal.[1] Investment, however, will be socially desirable in only those sectors for which the value of the LHS of the conditions equals the social opportunity cost. This equality will prevail only in those sectors with the larger values on the LHS. Thus, it becomes important to determine which economic factors contribute to increasing the value of the LHS of the conditions.

The share of capital One of the more obvious elements to be considered is the relative magnitudes of the three parameters β_3, γ_3, and δ_3. From (4.46a)-(4.48a) it is obvious that the larger any one of these parameters is relative to the other two, the relatively more desirable it becomes to have a higher (rather than lower) capital/output ratio in that sector. In other words, the larger the share of output attributable to capital in a particular sector, the higher the optimum capital/output ratio becomes relative to other sectors.

Social valuation of outputs The desirability of increasing the capital/output ratio in the various sectors is strongly influenced by the social values attached to the outputs of the three sectors X_3, X_4, and X_5. The social value of capital goods production (X_5) is an indirect or imputed social value since capital goods do not enter the welfare function directly except in the evaluation of post-terminal productive capacity.

---

[1] The principal advantage of this formulation over that used in the decentralized model is that investment does not have to occur in all sectors in every period as previously assumed. This relaxes a very restrictive and unrealistic assumption.

Since capital goods are not consumed in this model, the production of capital goods is socially desirable only from the standpoint of the increased production and consumption of agricultural and manufactured goods made possible in subsequent periods through the accumulation of capital. At the other extreme, agricultural output is used for consumption purposes only. Consequently, the social value of agricultural production is derived strictly from direct consumption benefits and no indirect value is imputed to agricultural production in this model. Between the extremes exemplified by agricultural and capital goods is the social valuation of manufactured production. Since manufactured goods are used both for consumption and as a factor of production, X_4 contains elements of both direct and indirect social value. The differences in the nature of the social values of the products of these sectors results from the different contributions the three types of output make to social welfare. A positive social value on capital goods production expresses a concern for expanded future consumption, while a positive value for agricultural or manufacturing production expresses a concern for present welfare.

Comparisons among the relative magnitudes of the three social values is difficult because of the nature of the considerations involved. The easier comparison is between X_3 and X_4 since intertemporal considerations are not explicitly involved within periods. During the initial periods of the plan the magnitude of X_3 might be expected to exceed the magnitude of X_4. Based on the assumptions about the welfare function discussed in Chapter II, the marginal social utility of an additional unit of

C_1 is assumed to exceed the marginal social utility of C_2 in the early periods of the plan. This implies that $X_2 = X_3 > X_4$. This is true even though manufactured goods are also used as factors of production.[1] It cannot be assumed that the relative magnitudes of X_3 and X_4 will remain unchanged throughout the planning period. The marginal welfare derived from the consumption of additional units of agricultural goods declines more rapidly than the marginal welfare of additional manufactured goods consumption. The ratio X_{3t}/X_{4t} may decline over time if both agricultural and manufactured goods production increase over time. However, this need not be the case if the ratio C_{1t}/C_{2t} declines over time at a sufficiently rapid rate.

In summary, during the initial periods of the plan it may be expected that $X_{2t} = X_{3t} > X_{4t}$. However, the magnitude of this inequality can be expected to decrease over time unless the production of manufactured goods expands sufficiently more rapidly than agricultural production so that the ratio of C_{1t}/C_{2t} declines rapidly enough to offset the differential rates at which the marginal welfares diminish.

It is more difficult to make meaningful comparisons of X_{5t} and X_{3t} or X_{4t} than to make comparisons between X_{3t} and X_{4t}. Comparisons involving X_{5t} require consideration of the social value of present versus future consumption since the value of X_{5t} is an imputed value which is

---

[1] The social utility of using manufactured goods in consumption must equal the social utility of using them as factors of production if the allocation is optimum. In other words, the marginal social utility of consuming manufactured goods is equal to the marginal social opportunity cost of not consuming them.

derived from the expansion of consumption of manufactured and agricultural goods made possible. The intertemporal aspect of the problem arises because the social payoff for the production of capital goods in period t cannot be realized as expanded consumption before period t+1. Thus, if the society places a high premium on present consumption relative to future consumption, the value of X_5 will be somewhat lower than if society was relatively less concerned with shorter term satisfactions. The magnitude of X_{5t} is strongly influenced by the social rate of discount, ρ, which is chosen by the policy-maker to reflect society's intertemporal preferences with respect to consumption. As society places greater emphasis on present rather than future consumption, this will be reflected in the model through the choice of a higher value of ρ. An increase in the social rate of discount will result in a decline in the social value of capital accumulation, X_5. The other parameter in the model which reflects society's intertemporal preferences is the weight given to post-plan productive capacity, θ. A greater concern by society to bequeath a large productive capacity to future generations is reflected in the model by an increase in θ. This terminal productive capacity must, to some extent, be acquired at the expense of current consumption. Consequently, an increase in the magnitude of θ leads to a concomitant increase in the social value of capital goods production, X_5.

Thus, the value of X_5 is determined to a large extent by the social rate of discount and the relative emphasis given to terminal productive capacity. While the analysis of the consequences of choosing particular values for these parameters is an economic problem, the actual choice of

the values of the parameters is essentially a political question involving the ethics of the well-being of current versus future generations as well as the problem of current versus delayed consumption within the present generation.

Finally, the problem of comparing the relative magnitudes of X_3 and X_4 with X_5 involves many diverse and difficult considerations such as levels of production of the three goods as well as the relative rates of expansion of C_{1t} and C_{2t}. The most difficult problem, however, arises from the intertemporal aspects of current versus delayed consumption. In general terms it appears that as relatively more emphasis is placed on current rather than future consumption, less emphasis will be placed on the accumulation of capital goods and the absolute and relative levels of C_1 and C_2 become proportionately more important in determining the allocation of investment. Concomitant with this is reduced emphasis on expansion of capital goods capacity as reflected by a lower value for X_5.

<u>The rate of technical change and SOC accumulation</u> The only terms on the LHS of (4.46a)-(4.48a) remaining to be considered are the output/capital ratios. From (4.3)-(4.5) we have

$$Y_{1t}/K_{1t} = \sigma_1 G_{1t}^{\lambda} F_{1t}^{\beta_1} L_{1t}^{\beta_2} K_{1t}^{\beta_3}/K_{1t}, \tag{4.69}$$

$$Y_{2t}/K_{2t} = \sigma_2 (1+\varepsilon)^t F_{2t}^{\gamma_1} L_{2t}^{\gamma_2} K_{2t}^{\gamma_3}/K_{2t}, \tag{4.70}$$

and

$$Y_{3t}/K_{3t} = \sigma_3 (1+\varepsilon)^t F_{3t}^{\delta_1} L_{3t}^{\delta_2} K_{3t}^{\delta_3}/K_{3t}. \tag{4.71}$$

Since the numerators of the ratios in (4.69)-(4.71) involve different units of account, the only meaningful comparisons among these ratios

involve those factors which will tend to change the relative magnitudes of these ratios over time.

The most obvious factor is the rate of technical chance, ε, in the manufacturing and capital goods sector relative to the rate of SOC accumulation in commercial agriculture. The "effective" rate of SOC accumulation is

$$\frac{G^{\lambda}_{1,t+1} - G^{\lambda}_{1t}}{G^{\lambda}_{1t}} = \left[\frac{\bar{L}_{1t}}{\bar{G}_{11} + \sum_{i=1}^{t-1} \bar{L}_{1i}}\right]^{\lambda} \geq 0. \tag{4.72}$$

Since $\varepsilon > 0$, the productive influence of SOC accumulation in commercial agriculture may be greater than, equal to, or less than the exogenous rate of technical change in the manufacturing and capital goods sectors. Denote the LHS of (4.72) as $\Delta G/G$. If $\Delta G/G > \varepsilon$, then private capital accumulation in the agricultural sector would be relatively more desirable than if $\Delta G/G < \varepsilon$. This is because, ceteris paribus, the larger the rate of increase of the output/capital ratio in a sector, the relatively more desirable it will be to expand the capital stock in that sector. While ε is a constant $\Delta G/G$ may vary over time. Consequently SOC accumulation will have a varied influence over time on the relative desirability of private investment in commercial agriculture.[1]

<u>Changes in the terms of trade</u> The remaining elements in (4.69)-(4.71) that can alter the output/capital ratios are the inputs of manufactured goods and labor. From (4.12)-(4.17) it is apparent that the

[1] This complementarity between SOC and private investment in commercial agriculture was also noted in the previous section on SOC accumulation.

influence of these factors is determined by the TT over time. Since $P_{2t} = 1$, the output/capital ratio in the manufacturing sector may be treated as a numéraire. If P_{1t} increases over time, it will become profitable to employ larger amounts of labor and manufactured inputs in this sector, which will tend to increase Y_{1t}/K_{1t} relative to Y_{2t}/K_{2t}. This increase in the output/capital ratio in commercial agriculture will tend to make investment in this sector relatively more desirable than investment in manufacturing. The opposite result ensues if P_{1t} declines over time. Similarly, changes in P_{3t} over time will have analogous implications for the relative desirability of investing in the capital goods sector. Thus, as the TT move in favor of a particular sector, this will tend to make investment in that sector socially more desirable since it becomes profitable to employ more variable factors of production in that sector.[1]

Summary

In this section, the allocation of private investment funds has been analyzed. An attempt was made to delineate the economic, physical, and technical conditions of an economy which will tend to make investment in each of the three sectors socially desirable. The following conclusions regarding certain economic and technical considerations appear to be relevant in deciding upon the relative social desirability of investing in

[1] Note that these results coincide with the assumptions made about private investment behavior in Chapter II. This coincidence suggests the results regarding the allocation of investment funds in the present "centralized" model do not differ appreciably from the results that would be obtained from the more complex "decentralized" model.

one or more of the private investment alternatives. (1) The larger the share of output attributable to capital as a factor of production in any one of the three sectors, the relatively larger the socially optimum capital/output ratio in that sector will tend to be. Hence, small expansions in output will tend to require relatively large investments in capital. (2) In the initial periods of the plan the social desirability of marginal increments of agricultural goods may be expected to exeed the social desirability of marginal increments of manufactured goods. This would tend to enhance the social desirability of investing in agriculture relative to manufacturing early in the plan. (3) Whether the relative social desirabilities of marginal increments of production of agricultural and manufactured goods remain unchanged over the planning horizon depends on the relative rates of increase of consumption of the two goods. If the ratio of agricultural goods/manufactured goods consumption declines over time at a sufficiently rapid rate, the social desirability of marginal increments of agricultural production may increase relative to the social value of an increment of manufactured goods production. (4) The social desirability of expanding productive capicity in the capital goods sector is enhanced relative to expansion of the productive capacity of the other sectors if relatively less weight is given to current rather than future consumption during the plan. In other words, the lower the social rate of discount the greater the social desirability of investing in expansion of the capital goods sector. (6) As society's concern to bequeath a large post-plan productive capacity to future generations increases, the social desirability of expanding the productive capacity of the capital goods sector during the plan will increase. (7) If the effective rate of SOC

accumulation in commercial agriculture exceeds the exogenous rate of technical change in the manufacturing and capital goods sectors, this will tend to increase the social desirability of investing in agriculture relative to the investing in the manufacturing or capital goods sectors. This, however, may have adverse TT effects. (8) If the TT move in favor of a particular sector, this tends to increase the social desirability of expanding the productive capacity of that sector via investment. This conclusion depends crucially on the assumption of a closed economy.

The discussions of the allocation of private and public investment funds have largely abstracted from the opportunity costs of making these investments and the interrelationships between private and public investment. These problems are considered in the following section.

Private Investment Versus SOC Accumulation

The marginal social desirability of investing in either private capital or SOC is determined by the potential payoffs involved from such investments and the total amount of investment funds available for these purposes. The potential payoffs have been extensively analyzed in the preceding sections. In this section the availability of funds is considered.

The total funds available for SOC accumulation are the tax revenue collected in the particular period. The government budget constraint is given in (4.10). The funds available for private capital accumulation are the income earned by the existing capital stock plus any funds transferred from the government budget. The private savings budget is given in (4.19).

The transfer of funds from the government budget to the private savings budget must satisfy the first-order requirements in (4.43). These conditions may be rewritten as

$$X_{19t} \leq X_{10t};\ I_t(X_{19t} - X_{10t}) = 0;\ I_t \geq 0 \tag{4.43a}$$

These conditions require that the social value of a marginal increment of investment in private capital (X_{19t}) must not exceed the social value of a marginal increment in SOC accumulation (X_{10t}). This relationship is maintained by transferring government funds to the private savings budget if the social payoff to private investment exceeds the payoff to SOC accumulation. Furthermore, the social value of marginal increments in investment in these two alternatives must be equal if it is desirable for funds to be transferred from the government to the private budget.

Suppose that in period t, $\bar{L}_{st}$, I_t, and $\bar{I}_{1t}$ are all positive. This implies that (4.52) will be satisfied and that the LHS of (4.46a) will equal the RHS. In addition, this implies that $X_{19t} = X_{10t}$. Eliminating these two variables from (4.46a) and (4.52), we have

$$\frac{\beta_3 \sum_{i=t+1}^{\tau+1} (X_{3i}Y_{1i}/K_{1i}) - X_{9t}}{P_{3t}} = \frac{\lambda \sum_{i=t+1}^{\tau+1} (X_{2i}Y_{si}/G_{si}) - X_{6t}}{(1-\psi)\omega} + X_{18t}. \tag{4.73}$$

This equation indicates that the net social marginal benefit per unit of purchasing power in investment in private capital in the commercial agricultural sector must equal the net social marginal benefit per unit of purchasing power spent on SOC accumulation in the subsistence sector. Relaxing the assumption that I_t is positive weakens (4.73) so that the

LHS $\leq$ RHS.

Turning now to the interpretation of the individual terms in (4.73), the first term on the LHS represents the discounted present marginal social value productivity of private capital stocks in commercial agricultural production in subsequent periods of the plan, deflated by the price of investment goods in period t. The second term on the LHS of (4.73) indicates the social opportunity cost of using investment goods in this manner in period t, deflated by the cost of purchasing these goods. The first term on the RHS indicates the present social marginal value productivity of SOC in subsistence agricultural production in subsequent periods of the plan per unit of net government labor cost. The second term is the social opportunity cost (per unit of government purchasing power) of using labor for SOC accumulation in period t. Finally, the last term on the RHS is the marginal social benefit derived from the increased consumer income resulting from the employment of labor in SOC accumulation.

The relative importance of the social opportunity cost of using capital goods per unit of private savings expended (X_{9t}/P_{3t}) and the social opportunity cost of using labor per unit of government expenditure ($X_{6t}/\{1-\psi\}\omega$) will be influenced by the capacity of the capital goods industry and the size of the labor force. As the capacity of the capital goods industry increases relative to the size of the labor force, the social opportunity cost of using investment goods will decline relative to the social opportunity cost of using labor. This suggests the transfer of funds from the government budget to the private savings budget would be

relatively more attractive in an economy which has a larger productive capacity in the capital goods industry. The opposite, of course, is true in an economy which has relatively more labor in proportion to capital goods capacity.

An additional influence tending to diminish the social desirability of transferring funds is the social benefit of the consumer income generated by the government employing labor for SOC accumulation. This results in a higher wage rate for any labor transferred from subsistence agriculture to the government payroll, and the magnitude of the increase in the wage rate would be expected to be larger as the ratio of labor to the resource base of the economy increases. Consequently, transfer of funds from the government budget to the private savings budget is less likely to occur in economies which have high ratios of labor to resources.

CHAPTER V. AN ANALYSIS OF THE IMPACT OF FOREIGN AID

Foreign aid can take various forms and be put to alternative uses by the recipient country. The principal reason for granting aid should be to assist the recipient country in its attempts to develop its economy, or to provide short-run relief in cases of emergency. All too frequently, however, the form of the aid and the conditions under which the aid is provided appear to be largely determined on the basis of what will be of the greatest benefit to the donor country.

In this chapter, the impact of specific commodity aid on the recipient economy is analyzed. Since the models in this study do not include foreign trade it is not possible to analyze the problem of repaying loans. Only outright gifts of specific commodities to the government of the recipient countries are considered. Since one of the principal forms of commodity aid has been in the form of food, the major portion of this chapter is concerned with a comparative statics analysis of the effect on the economy of the recipient country of a grant of food aid in one time period. Alternative methods of utilizing and distributing the food are analyzed. Some implications for other forms of commodity aid are drawn and some intertemporal considerations on development and resource allocation are discussed.

Three methods of food distribution are considered. The first and simplest of these is the case where food is given as a grant to the consumers. The second method considered is where the food is used by the government as wages in kind in the development of SOC. The third and final distribution method considered is the case where the

government merely sells this food in the market and then uses the revenue received from this food as though it was indistinguishable from tax revenue.

The economic consequences of these three alternative distribution methods are analyzed within the framework of a partial equilibrium model. This model is consistent with the models outlined in the preceding chapters and its relationship to these models is elucidated.

Grants of Food to Consumers

Outright grants to consumers are assumed to be made for humanitarian reasons and nothing is required from the recipient consumers in terms of payment for this food. This would have the effect of augmenting the aggregate consumer budget by an amount equal to the value of the food aid. Assuming changes in the output and prices of manufactured and capital goods resulting from food aid to have a negligible effect on consumer income, we can denote the aggregate budget constraint as

$$I = g(P, Y_s, Y_1) + PA, \tag{5.1}$$

where I denotes aggregate consumer income, P denotes the price of agricultural output (food) and A represents the amount of food aid. Since a large portion of the total labor force is employed in the agricultural sectors, consumer income is considered to be a function of the price and level of output (employment) in these sectors.

Total demand for food is a function of the relative price of food and consumer income. Thus we have

$$D = f(P, I). \tag{5.2}$$

The total supply of food is the sum of domestic production and the amount of food aid. Thus we have

$$S = h(P, L_s) + A, \tag{5.3}$$

where domestic supply is a function of the price and the amount of subsistence employment. For equilibrium it is required that

$$D = S. \tag{5.4}$$

To determine the effect of varying the amount of food aid, differentiate (5.4) with respect to A and we get

$$\frac{\partial f}{\partial P}\frac{\partial P}{\partial A} + \frac{\partial f}{\partial I}\{(\frac{\partial g}{\partial P} + A)\frac{\partial P}{\partial A} + P\} = \frac{\partial h}{\partial P}\frac{\partial P}{\partial A} + 1. \tag{5.5}$$

Assuming that aid depresses the price of agricultural goods ($\partial P/\partial A < 0$), it is apparent that the total quantity of food purchased will not increase by the amount of the aid since there will be an offsetting decline in domestic production. The extent of the decline in domestic production will be determined by the responsiveness of farmers to price changes and the responsiveness of prices to changes in aid. The latter will involve the responsiveness of consumer demand for food to changes in prices and the income changes resulting from price changes and grants of food aid.

Multiplying both sides of (5.4) by P, differentiating with respect to A, and collecting terms we get

$$(D + PA + P\frac{\partial f}{\partial P} + P\frac{\partial f}{\partial I}\frac{\partial g}{\partial P})\frac{\partial P}{\partial A} + P^2\frac{\partial f}{\partial I} = (S + P\frac{\partial h}{\partial P})\frac{\partial P}{\partial A} + P. \tag{5.6}$$

Equation (5.6) indicates whether the total value of food tends to increase or decrease when the amount of aid is altered. If the sum of the terms on the LHS (or RHS) of the equation is negative, the total value of the food consumed tends to decrease as the amount of aid increases. Dividing the

LHS of (5.6) by D we get

$$\{1 + \frac{PA}{D} + \frac{P}{D}\left(\frac{\partial f}{\partial P} + \frac{\partial f}{\partial I}\frac{\partial g}{\partial P}\right)\}\frac{\partial P}{\partial A} + \frac{P^2}{D}\frac{\partial f}{\partial I}. \tag{5.7}$$

The term $\frac{P}{D}\left(\frac{\partial f}{\partial P} + \frac{\partial f}{\partial I}\frac{\partial g}{\partial P}\right)$ defines the price elasticity of demand for food which Mellor suggests is approximately -0.9 for low-income countries (38, p. 72). Since $1 + \frac{PA}{D} \geq 1$ and $\frac{\partial P}{\partial A} < 0$, the term $\{\}\frac{\partial P}{\partial A}$ will be negative unless Mellor's price elasticity estimate is too low in absolute value. The likelihood that this term is negative will increase as $\frac{PA}{D}$ increases. The term $\frac{P^2}{D}\frac{\partial f}{\partial I}$ will be positive unless food is an inferior good. Thus, if $\{\ \}$ is positive, the likelihood that the total value of the food consumed tends to decrease as the amount of food aid is increased will tend to be larger as the proportion of the food that is provided as aid increases. In other words, an increase in the amount of aid is more likely to cause the total value of the food consumed to decline as the ratio of food aid to domestic production increases.

The principal net effect of the grants form of food aid distribution appears to be the increase in consumer welfare that occurs in the particular period in which the aid is given. To the extent that this aid is a "once in a lifetime" effort and prices of agricultural goods are depressed for one period, there could result a misallocation of private investment resources under the assumptions of the decentralized model of Chapters II and III. It is also conceivable that aid of this nature would reduce the social value of marginal agricultural production (X_2 and X_3) in the centralized model in Chapter IV. If that is the case and the government anticipated receiving this food aid, there would be a reduced incentive to invest in agricultural SOC in preceding periods relative to the incentive that would exist if no aid was anticipated.

If the government planning authority anticipated receiving food aid throughout the duration of the planning period and no adjustments were made in the objectives of the plan, the resulting terminal capital structure may very well be different than if no aid was received or anticipated. Underinvestment in agriculture is likely to occur if no emphasis is placed on self-sufficiency.

Food Aid for Work Projects or Wages in Kind

In this method of food aid distribution, the recipients are required to work on projects to earn their food in the form of wages. The projects are assumed to be SOC projects and the laborers are drawn from the subsistence sector. This has the effect of reducing current agricultural production more than in the previously analyzed case where the food was simply granted without any conditions.

The amount of labor which can be hired through the use of the food as wages in kind is

$$(1-\Psi)(\bar{L}_s + \bar{L}_1) = PA, \tag{5.8}$$

and substituting into (2.12) we get

$$L_s = L_o - L_1 - L_2 - L_3 - PA/\omega(1-\Psi). \tag{5.9}$$

Thus,

$$\frac{\partial L_s}{\partial A} = -\frac{P}{\xi} - \frac{A}{\xi}\frac{\partial P}{\partial A}, \tag{5.10}$$

and from (5.3) we get

$$\frac{\partial S}{\partial A} = \left(\frac{\partial h}{\partial P} - \frac{A}{\xi}\frac{\partial h}{\partial L_s}\right)\frac{\partial P}{\partial A} - \frac{P}{\xi}\frac{\partial h}{\partial L_s} + 1, \tag{5.11}$$

where $\xi = \omega(1-\Psi)$. Since $\partial h/\partial L_s > 0$ by assumption, the magnitude of

(5.11) must be less than the value of the RHS of (5.5). Consequently, the magnitude of the decrease in price resulting from this type of distribution must be less than the decrease due to a simple grant in food since the demand side of (5.5) remains unchanged. In other words, the intraperiod price effect of this type of food and distribution is smaller than if the food is simply given as a grant because domestic production will fall to a greater extent as a result of the labor transferring out of the subsistence sector. The net result is that there is a relatively smaller payoff within the period when food is used to employ labor on SOC work projects because consumption does not increase as much as in the case of grants. In succeeding periods, however, there will be some additional social payoff from the increased production possible because of the added SOC available for productive purposes.

Market Sales of Food

The third distribution method to be considered is the case where the government in the recipient country sells the food in the open market and simply adds the revenue from the sale of this food to the general government budget. The centralized model discussed in Chapter IV considers two alternative uses for this additional government revenue. The additional revenue can be used to employ labor for SOC accumulation or to purchase capital goods for investment in private capital accumulation. The first of these two alternatives is identical with the wages in kind distribution method considered in the preceding section.

The intraperiod consequences of using the revenue generated by food sales to purchase capital goods are more complex. The increased demand

for capital goods will tend to result in a higher price for capital goods. This will result in expanded production in this sector and a subsequent withdrawal of labor from the subsistence sector. Thus, (5.9) is replaced by

$$L_s = L_o - L_1 - L_2 - L_3 - \bar{L}_s - \bar{L}_1, \tag{5.12}$$

where $\bar{L}_s$ and $\bar{L}_1$ may be zero. Differentiating (5.12) with respect to aid we get

$$\frac{\partial L_s}{\partial A} = - \frac{\partial L_3}{\partial P_3} \frac{\partial P_3}{\partial A} < 0. \tag{5.13}$$

The absolute magnitude of (5.13) may be expected to be less than the absolute magnitude of (5.10) since the revenue earned from food sales must also cover expenses such as additional manufactured inputs in addition to hiring more labor. Differentiating (5.3) under these assumptions we get

$$\frac{\partial S}{\partial A} = \frac{\partial h}{\partial P_1} \frac{\partial P_1}{\partial A} - \frac{\partial h}{\partial L_s} \frac{\partial L_3}{\partial P_3} \frac{\partial P_3}{\partial A} + 1. \tag{5.14}$$

The demand side of the system also requires some modification since aggregate consumer income is no longer augmented by the value of the food aid. The additional food must be purchased out of the income earned in other employment. Thus, equation (5.1) is replaced by

$$I = g(P_1, P_3), \tag{5.15}$$

where P_3 is included since output and production in the capital goods sector must be considered. Differentiating (5.2) with respect to food aid we get

$$\frac{\partial D}{\partial A} = \frac{\partial f}{\partial P_1}\frac{\partial P_1}{\partial A} + \frac{\partial f}{\partial I}\left(\frac{\partial g}{\partial P_1}\frac{\partial P_1}{\partial A} + \frac{\partial g}{\partial P_3}\frac{\partial P_3}{\partial A}\right). \tag{5.16}$$

Comparing (5.14) with the RHS of (5.5), since $\frac{\partial h}{\partial L_s}\frac{\partial L_s}{\partial P_3}\frac{\partial P_3}{\partial A} > 0$, it is apparent that for any given change in P resulting from aid, the change in the quantity produced domestically plus the amount of aid will be larger if the aid is distributed in the form of grants rather than sold in the market and the revenue used to purchase capital goods. This result follows since the purchase of capital goods will tend to cause an expansion of capital goods production which will draw labor out of the subsistence sector causing a leftward shift in the domestic supply curve. Making a similar comparison between (5.16) and the LHS of (5.5), the change in the quantity consumed when the food is distributed as a grant will be larger than when it is sold in the market. The reason for this disparity is that when the food is given as a grant, effective aggregate consumer income increases by the amount of the value of the food aid resulting in a rightward shift in the demand curve. Selling the additional food through the market results in a smaller income effect and, hence, a smaller rightward shift in the demand curve. The net implication of these two sets of relative changes is that the quantity of food consumed will increase more when the aid is distributed in the form of grants rather than when the aid is sold in the market and the revenue generated by these sales used to purchase capital goods. The relative influence of the two distribution methods on the price of food will depend on the relative magnitudes of the demand and supply shifts.

Comparisons Among the Three Distribution Alternatives[1]

The intraperiod relationships among the prices and quantities of agricultural goods under the three distribution methods may be compared diagrammatically as in Figure 5.1. The demand and supply curves that would prevail in the absence of aid are represented by the curves D_o and S_o, respectively. These demand and supply schedules would result in a price of P_o and quantity consumed of Q_o.

Distributing the food aid in the form of grants results in the largest shift in the supply curve since employment in the subsistence sector remains unchanged. Thus, $S_g = S_o + A$, where S_g represents the total supply curve and S_o represents the domestic supply curve that prevails if no aid is given. Since granting the food to consumers has the effect of bolstering aggregate effective consumer income, the demand schedule shifts to the right and is represented by the curve D_g. The intersection of the resulting demand and supply curves results in a price-quantity configuration where $P_g < P_o$ and $Q_o < Q_g$. The equilibrium price under grants of aid must be lower than under no aid unless the marginal propensity to consume food out of income is unity. In other words, if the recipients of the grants of aid divert some of the income they were previously spending on food to the consumption of nonfood commodities, a drop in price will result.

Turning now to the work projects form of distribution, the income effect of this form of distribution is identical with the income effect of grants and $D_w = D_g$. The domestic supply curve will shift to the left since labor is transferred from the subsistence sector to SOC projects,

---

[1]This section is almost identical to the last section in Chapter I.

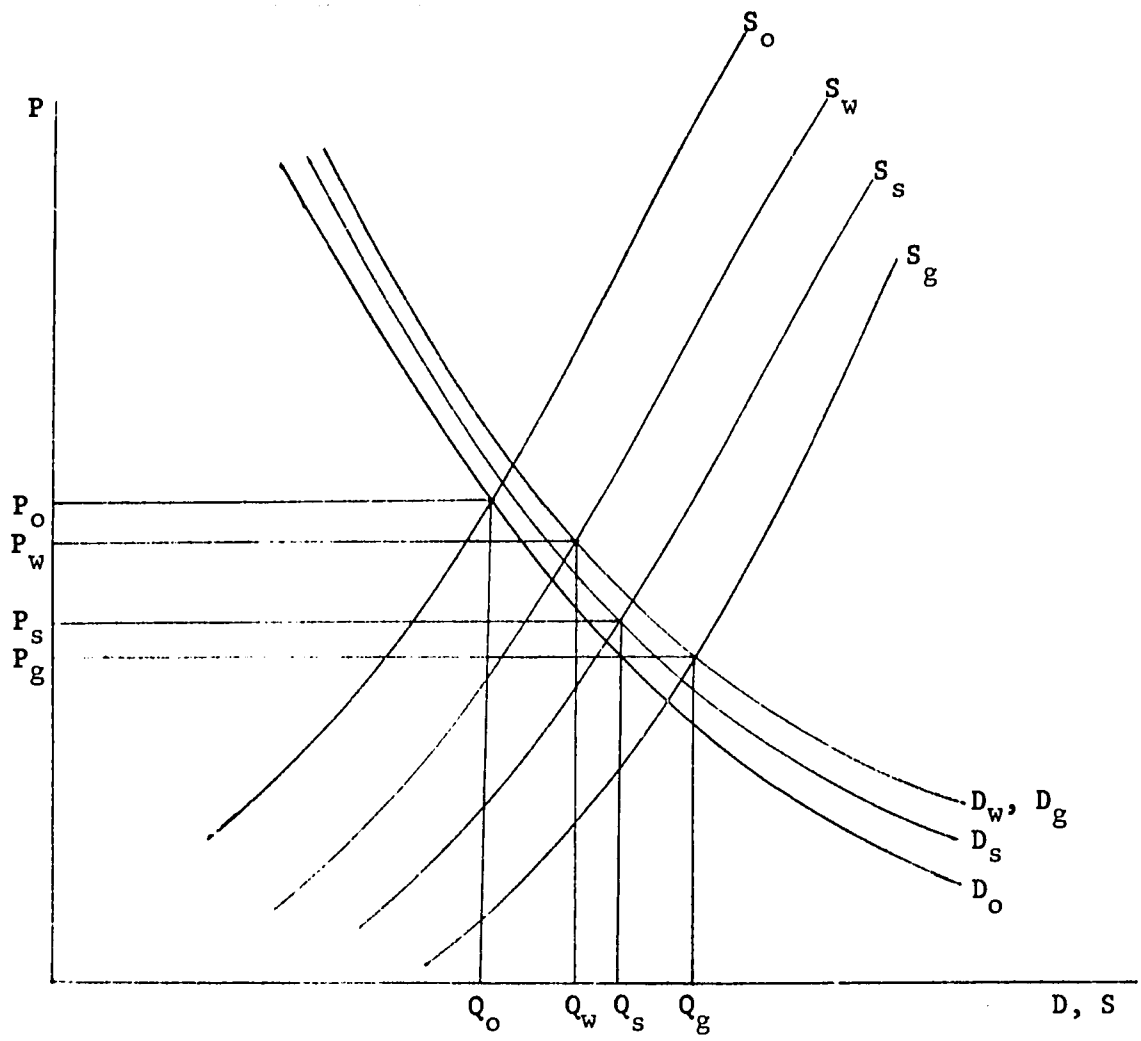

Figure 5.1. Prices and quantities of food consumed under alternative distribution methods

but the shift will not be sufficient to offset the influence of the aid by virtue of the assumptions embodied in (2.21).[1] Consequently, the equilibrium quantity consumed will increase and be greater than the quantity that would be consumed in the absence of aid. However, the

---

[1] From (2.6), (2.21) and (5.9), we get $\frac{\partial Y_s}{\partial A} = -\alpha_2 \sigma_s G_s^{\lambda} F_s^{\alpha_1} L_s^{\alpha_2 - 1} (\frac{P}{\xi}) > -1$. Thus, the leftward shift of the domestic supply curve is not sufficient to offset the rightward shift of the total supply curve by the aid, $\frac{\partial A}{\partial A} = 1$.

increase in quantity consumed will not be as large as the increase realized when the food is given to consumers in the form of grants. This leads to an equilibrium price-quantity relationship P_w and Q_w which has the characteristics that $P_o > P_w > P_g$ and $Q_o < Q_w < Q_g$.

Distributing the food aid through sales in the market place and using the revenue from these sales to hire subsistence labor to work on SOC projects affects the economy in exactly the same manner as if the food was distributed as wages in kind since the revenue earned from the sales is all paid out in wages. Thus, the effect on consumer income is the same as in the wages in kind distribution and exactly the same amount of labor can be hired from the subsistence sector leading to identical demand and supply shifts. However, if the revenue from government food sales is used to purchase capital goods, the domestic supply schedule for agricultural goods will shift to the left by a smaller amount than in the case of wages in kind distribution, as is evident from comparing (5.14) and the RHS of (5.5). The demand curve does not shift as much since all the additional food must be purchased out of income earned in employment. Thus, income is augmented only to the extent that the increased purchase of capital goods bids up the price of capital and hence, leads to increased employment in the capital goods industry where the return to labor is higher than in the subsistence sector. This income effect is smaller than that experienced with the grants or wages in kind distribution methods. Hence D_s must lie between D_o and D_w. For exactly the same reason,[1] the new supply schedule S_s must lie between S_w and S_g. The

[1] The amount of labor removed from subsistence production is smaller if capital goods are purchased than if SOC projects are undertaken.

resulting equilibrium price, P_s, and quantity, Q_s, have the properties that $P_o > P_w > P_s$ and $Q_o < Q_s < Q_g$. The equilibrium magnitude of P_s relative to P_g and Q_s relative to Q_w will depend on the extent of the shifts in the supply and demand schedules. It must be pointed out that these orderings may change if the labor hired in each of these situations does not come from the subsistence agricultural sector and is hired from an urban or rural pool of unemployed workers.

In summary, distributing the food through outright grants to consumers results in the largest increase in consumption and, hence, in consumer welfare. However, distributing food in this manner tends to depress the price of agricultural commodities more than if the food is used for work projects. It is not clear whether selling the food to consumers or giving it in the form of grants depresses the price of food the most. Although giving the food to consumers as an outright gift for purely humanitarian purposes has the largest welfare effect within the period, the benefits derived from this form of aid are limited to the time during which the aid is being received. The other distribution methods analyzed all have a smaller immediate impact on welfare. However, since these other alternatives created resources that were used to expand capacity, some of the payoff from these methods of utilizing food aid is not forthcoming until the increased consumption possibilities are realized in later periods.

Based on the assumptions underlying this study, the use of food aid has a tendency to depress the price of agricultural goods regardless of the method of distribution. Similarly, food aid will tend to reduce the

social value of a marginal increment of agricultural expansion. If a country was assured of receiving a certain amount of food aid for several periods and the government anticipated this aid in formulating its development plan, the incentive to expand the productive capacity of the agricultural sectors would be somewhat less than if no food aid was anticipated. If the food aid terminated unexpectedly, the economy would probably have a somewhat different capital structure than if the termination of aid was foreseen. This suggests that if an economy begins to rely on and to expect food aid, the economic incentives to develop the agricultural sectors are reduced. One way to insure that some development of these sectors does occur is to stipulate that the food must be used on work projects designed to assist in the development of agriculture. For example, the food could be used to develop an irrigation system or a rural road system to facilitate the marketing of produce.

Some Comments on Commodity Aid in General

Many of the effects emanating from food aid discussed in the preceding section appear to apply to any type of commodity aid which can be consumed directly. In terms of the models of this study, granting manufactured goods as aid would tend to move the terms of trade against that sector. Another result that appears to generalize to include manufactured goods aid is that as long as a country is receiving this type of aid and expects to continue receiving it, there will be a reduced incentive to develop that sector. This is because the social payoff to expanding the productive capacity is reduced since the commodity aid serves as a substitute

for domestic productive capacity.

If capital goods are provided as commodity aid the results are somewhat more abstruse since the demand for capital goods is a derived demand. However, it appears that the same phenomena apply in this case even though the goods are not consumed directly. The difficulty in the analysis of capital goods aid arises, in part, from the lags in the payoff. If the capital goods are placed in the capital goods industry, there can be no direct social payoff for at least two periods. If the capital goods are placed in a sector producing consumption goods, the payoff is forthcoming in the subsequent period in the form of expanded consumer goods production. To reap the payoff from capacity expansion in the capital goods sector results in an additional waiting period relative to placing the capital in the consumer goods sectors. Furthermore, it seems that capital goods aid will tend to reduce the social need and, hence, the incentive to develop this industry.

In summary, it appears that granting extended commodity aid of any particular type tends to reduce the incentive to develop that particular sector. This result ensues because the aid serves as a substitute for domestic productive capacity and, therefore, tends to bias the resource allocation criteria against the development of that sector. If the foregoing hypothesis is true, this can be at least partly remedied by placing restrictions on the purposes for which the recipient country may use the commodity aid. For example, in the case of food aid the donor country may require the food to be used in work projects which will help expand the productive capacity of agriculture. If capital goods are provided

as aid, the stipulation may be that these goods must be used to develop the capital goods industry. However, stipulations such as these will be good policy only if a measure of self-sufficiency in the production of the commodity is desirable.

CHAPTER VI. EMPLOYMENT, LABOR SUPPLY, AND POPULATION GROWTH

At the outset of this study, some rather restrictive assumptions were made regarding the size of the labor force, wage rates, and employment. In particular, the total labor supply was assumed to be fixed and perfectly inelastic. The wage rate was assumed to be exogenously determined at a constant level in the commercial agricultural, capital goods, manufacturing goods, and government sectors. Combining this constant wage rate assumption with the assumption that the total labor supply is perfectly inelastic implies that employment in the subsistence sector is determined by the interaction of the residual supply of labor and demand for labor in the subsistence sector. The implications of these assumptions are examined in the next section. This is followed by an analysis of the consequences of relaxing some of these assumptions.

Employment with Fixed Wage Rates and Inelastic Labor Supply

Any demand for labor in this study is a derived demand since direct demands for labor services are not considered. Thus, the demand schedule for labor in the subsistence and commercial agricultural sectors, manufacturing goods sector, and capital goods sector correspond to marginal value of productivity curves in these sectors. These curves can be derived from the resource allocation equations in the manner discussed in Chapter II. For example, (4.5), (4.14), and (4.16) can be solved to obtain the demand for labor in period t in the capital goods sector as

$$L_{3t} = \{\bar{\sigma}_3(1+\varepsilon)^t W_t^{\delta_1 - 1} P_{3t} K_{3t}^{\delta_3}\}^{\Delta}, \tag{6.1}$$

where W_t denotes the wage rate,

$$\bar{\sigma}_3 = \sigma_3 \delta_1^{\delta_1} \delta_2^{1-\delta_1}, \tag{6.2}$$

and

$$\Delta = \frac{1}{1-\delta_1-\delta_2} > 1 \tag{6.3}$$

Thus, demand for labor in the capital goods sector in period t is a function of the wage rate, price of output, level of capital stock, and level of technology. The demand equation has constant elasticity with respect to the wage rate equal to $\Delta(\delta_1-1) < 0$. Thus, the demand for labor will never fall to zero even at very high wage rates. Conversely, the wage rate will never fall to zero even if the amount of labor offered for employment is extremely large.

Similar demand equations for labor can be derived for the commercial agricultural and manufacturing goods sectors. Adding the demands for labor for these two sectors to the labor demand in the capital goods sectors leads to an aggregate demand function of the form

$$\tilde{L}_t = h(P_{1t}, P_{3t}, K_t, G_{1t}, T, W_{at}), \tag{6.4}$$

where $\tilde{L}_t = L_{1t} + L_{2t} + L_{3t}$, $K_t = (K_{1t}, K_{2t}, K_{3t})$, and T represents the state of technical productivity in the manufacturing and capital goods sectors. This demand is referred to as the labor demand in the advanced sectors. The form of (6.4) suggests a common wage rate, W_{at}, exists in all three advanced sectors.

Two alternative sources of employment for labor exist in addition to the employment opportunities in the advanced sectors. These alternatives are employment in the government sector,

$$\bar{L}_t = \bar{L}_{1t} + \bar{L}_{st}, \tag{6.5}$$

and employment in the subsistence sector. Assume, for the moment, that government employment is exogenously determined and given. Since the wage rate in the advanced sectors is assumed to be fixed, (6.4) determines a quantity of labor demanded for employment in these sectors. Thus, since the total labor supply is also fixed, employment in the subsistence sector is determined as a residual

$$L_{st} = L_o - \bar{L}_t - \tilde{L}_t. \tag{6.6}$$

The marginal value productivity of employing the last unit of labor in the subsistence sector determines the wage rate earned in that sector. Although there are not sufficient equations in the model to derive the MVP equation directly, such a function does exist and, in fact, fulfills a role in subsistence wage determination analogous to a labor demand function.[1] Denote this function as

$$W_{st} = g(P_{1t}, G_{st}, L_{st}). \tag{6.7}$$

It can be readily demonstrated that this function has properties similar to those exhibited by equation (6.4) with respect to the quantity of labor employed and the wage rate.

---

[1] In addition to the income earned by labor, it was assumed that labor also receives the rent earned by land in the subsistence sector as exemplified by (2.20) and (2.21). This unearned component of subsistence labor income is ignored for the moment.

The employment-wage determination problems can be illustrated diagrammatically as in Figure 6.1, for simplicity, the functions in (6.4) and (6.7) are assumed to be linear with respect to wage rates and employment. The quantity of labor is represented along the horizontal axis. The left vertical axis indicates the wage rate in the advanced sectors and the right vertical axis measures the subsistence wage rate. Employment in the advanced sectors is measured from left to right and subsistence employment is measured from right to left. Assuming an exogenously fixed wage rate $W_a = \omega$ in the advanced sectors results in a

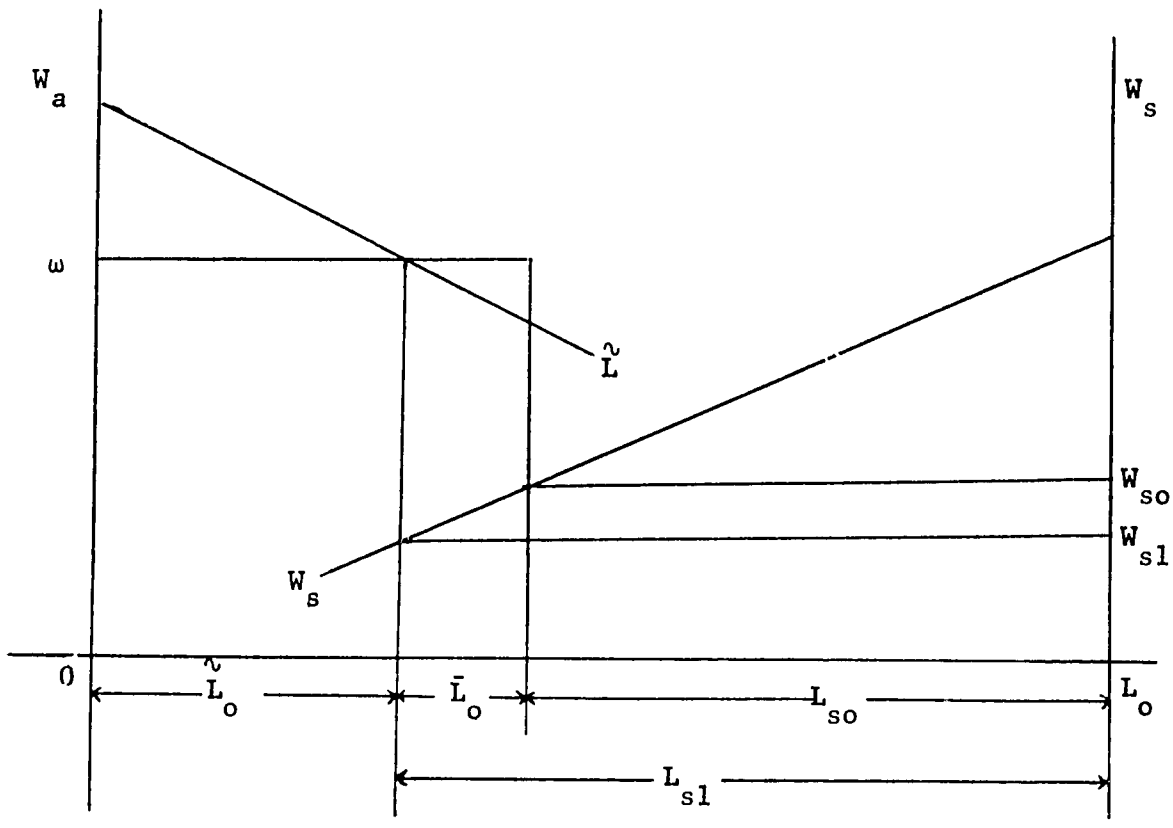

Figure 6.1. Employment and wage determination with a fixed labor force

labor demand of $\tilde{L}_o$. If government employment on SOC projects[1] requires a quantity of labor equal to $\bar{L}_o$, subsistence employment (measured from right to left) results in a wage rate of W_{so}. Reducing government employment to zero would leave employment and the wage rate in the advanced sectors unchanged, but employment in the subsistence sector would increase to L_{s1} and the subsistence wage rate would fall to W_{s1}. This would result in a reduction of the total wage bill and, hence, consumer income for the economy.

The rigidity of the wage rate in the advanced sectors may be the result of any one or more of several reasons. For example, subsistence laborers may be unwilling to leave their village to work in the advanced sectors for a wage rate any lower than ω. Employees in the advanced sectors may be organized in a labor union which demands that the union members be paid this wage rate and restrict membership and employment accordingly. Another reason may be that the average subsistence laborer may not be sufficiently well trained to be employed in the advanced sectors. Thus the employers may have to make some sort of investment in the individuals. Once this investment in training has been made, the advanced sector employees are differentiated from the labor employed in the subsistence sector.

---

[1] Government employees are assumed to receive the same wage rate as employees in the advanced sectors.

The Implications of an Elastic Supply of Labor

Assuming the total supply of labor is perfectly inelastic with respect to the wage rate implies that the aggregate income-leisure preferences of the individuals in the labor force have certain peculiar characteristics. It is more common to assume that the amount of labor offered for employment increases at higher wage rates. Thus, as the subsistence wage rate increases the size of the effective labor force also increases. This tends to offset the amount of the increase in the subsistence wage rate resulting from, for example, an expansion in government employment.

This offsetting effect is illustrated in Figure 6.2. The subsistence and advanced sector wage rates are both measured on the left vertical axis. The horizontal axis represents labor. Employment in the advanced and government sectors ($\tilde{L}$ and $\bar{L}$) are measured from the left. The total supply of labor is represented by the curve

$$S_L = f(W_s, t) \tag{6.8}$$

Assuming the wage rate in the advanced sectors is exogenously fixed at ω implies that the quantity of labor employed in these sectors equals $\tilde{L}_o$. If government employment is fixed at $\bar{L}_o$, then the demand for labor in the subsistence sector, ${}_oW_s$, is measured to the right of the point, A_o. The intersection of the ${}_oW_s$ curve with the S_L curve indicates an equilibrium subsistence wage rate of W_{so} and employment of L_{so}. If government employment was increased from $\bar{L}_o$ to $\bar{L}_1$, this would have the effect of shifting the origin from which subsistence labor demand is

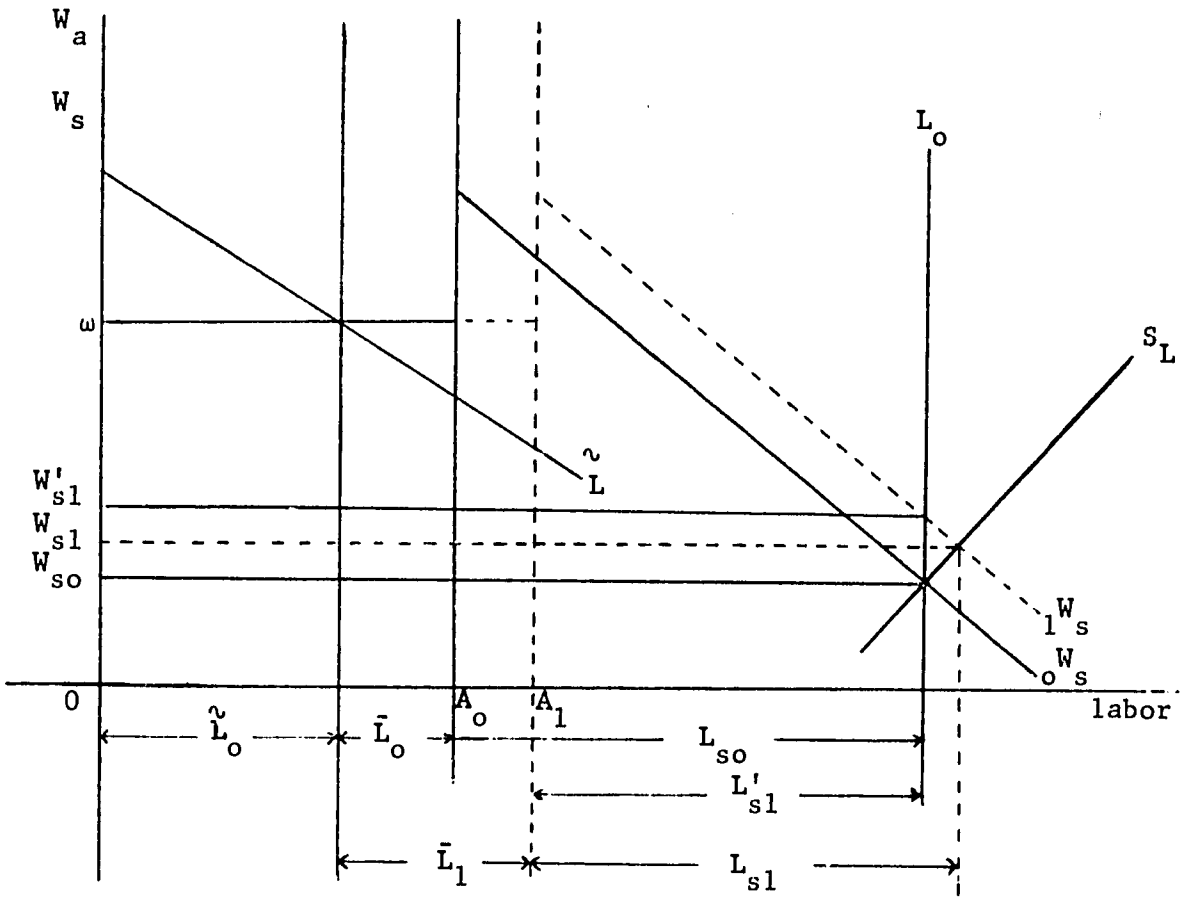

Figure 6.2. Wage rates and employment with an elastic labor supply

measured. This origin would shift from A_o to A_1. The new subsistence sector labor demand curve would also shift to the right and be represented by the broken line, $_1W_s$. The intersection of this curve with the supply curve would result in an equilibrium subsistence wage rate of W_{s1} and employment of L_{s1}. This new wage rate is lower than the wage rate (W'_{s1}) that would exist if the supply of labor was completely inelastic at the quantity L_o. With an elastic labor supply, equilibrium employment in the subsistence section (L_{s1}) would also be larger than employment if the total labor supply was inelastic (L'_s).

Employment and Wage Rates Through Time

In this section, the supply of labor is assumed to be perfectly inelastic since this simplifies the analysis and does not substantially affect the conclusions. The implications of relaxing this assumption are briefly discussed at the end of the section.

The effects of technical change and capital accumulation

If all prices and the wage rate in the advanced sectors are assumed to remain constant over time, the demand for labor in the manufacturing and capital goods sector will increase over time because of the exogenous increase in productivity. For example, if the rate of technical progress is assumed to be 100ε percent per year in the absence of investment in the capital goods sector, the rate of increase in the demand for labor can be derived from equation (6.1) as

$$(L_{3t} - L_{3,t-1})/L_{3,t-1} = (1 + \varepsilon)^{\Delta} - 1 > \varepsilon \qquad (6.9)$$

The rate of growth of labor demand exceeds the rate of technical change since $\Delta > 1$ as defined in (6.3). Since the labor demand equation for the manufacturing sector is of identical form, the rate of growth of labor demand due to technical change in the manufacturing goods sector is

$$(L_{2t} - L_{2,t-1})/L_{2,t-1} = (1 + \varepsilon)^{\Gamma} - 1, \qquad (6.10)$$

where $\Gamma = 1/(1 - \gamma_1 - \gamma_2)$. Technical change in the commercial agricultural sector is assumed to be a function of the rate of SOC accumulation in this sector. Hence, labor demand in this sector will increase whenever investment in SOC takes place.

Turning next to private investment, labor demand in each of the advanced sectors is positively related to the stock of private capital. Thus, private investment in any of these sectors tends to increase the demand for labor in the advanced sectors.

Increases in the demand for labor over time in the advanced sectors are illustrated in Figure 6.3 by the labor demand schedule, $\tilde{L}$, shifting to the right. The accumulation of subsistence sector SOC results in an increase in the marginal value productivity of labor in that sector. This effect is reflected through an upward shift in the MVP schedule, W_s, in Figure 6.3. These shifts are discussed in the following section.

The effects of population growth

One of the major problems facing less-developed countries today is the extremely high rate of population growth. In the preceding sections, the assumption that the total labor supply remains constant over time implicitly suggests that population also remains constant over time. The implications of relaxing these very restrictive assumptions of constant labor force and population are investigated in this section.

Two alternative assumptions regarding labor and population growth are investigated. The first of these is to assume that population grows at an exogenously specified constant percentage rate. The second alternative is to assume that the rate of population growth is a function of the level of per capita income in the subsistence sector.

Constant population growth Assume that total population, N, grows at a constant percentage rate n. Thus,

$$N_t = N_o\ (1+\eta)^t, \tag{6.11}$$

where N_o indicates the population in the initial period. If it is further assumed that a constant portion of the population, ξ, actively participates in the labor force, then $L_t = \xi N_t$ and the labor force grows at the same rate as the population.

The implications of combining this assumption with the results discussed in the preceding section are illustrated in Figure 6.3. For simplicity government employment is ignored. An equivalent assumption would be to assume that government employment remained constant.

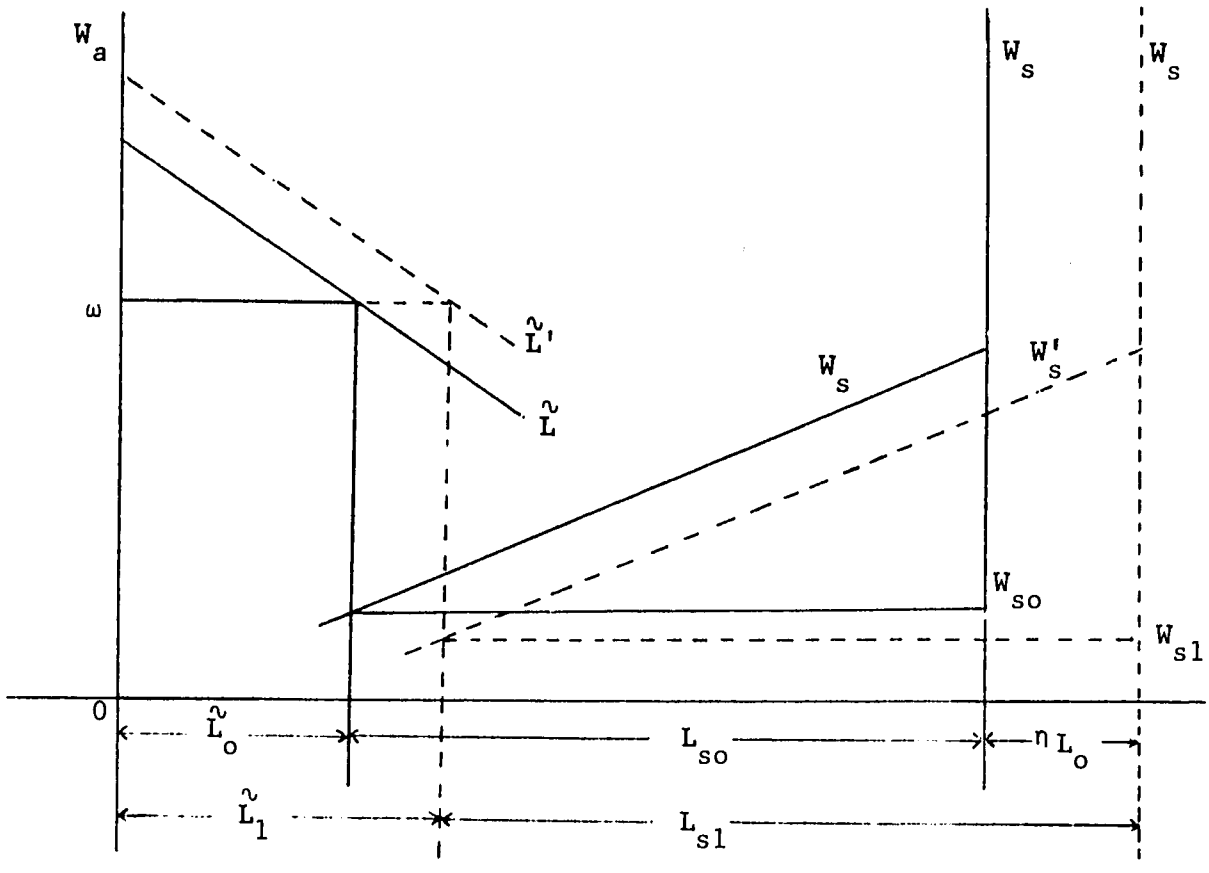

Figure 6.3. Wage rates and employment over time

The structure of Figure 6.3 is the same as that of Figure 6.1. As a result of the assumed increase in the labor force between the two periods, the total (perfectly inelastic) labor supply is shifted to the right by the amount nL_o. Thus, the origin for the subsistence labor MVP curve is also shifted to the right. As a consequence of technical change and capital accumulation in the advanced sectors, the demand for labor in these sectors shifts to the right from $\tilde{L}$ to $\tilde{L}'$. This leads to an increase in employment in the advanced sectors even though the wage rate is assumed to remain unchanged. If SOC investment occurs in the subsistence sector in the initial period, the MVP curve will shift upwards. As drawn in Figure 6.3, this upward shift of the W_s schedule is not sufficient to offset the rightward shift of the origin resulting from the growth in the population and labor force.

The net results of the shifts illustrated in Figure 6.3 are that employment in both the subsistence and advanced sectors increase. However, in spite of productivity increases and capital accumulation in both the subsistence and advanced sectors, the increase in population was so large that the wage rate in the subsistence sector was actually lower in the second period than in the first. Of course, this need not be the outcome. A larger productivity increase or smaller population growth could result in an increase in the wage rate in the subsistence sector.

<u>Population growth as a function of the subsistence wage rate</u> If the subsistence wage rate in the initial period in Figure 6.3 is the minimum on which the laborers can survive, this will impose a lower limit on the wage rate in this sector. This lower limit will be enforced by

preventing population growth from being maintained at the constant percentage rate n. Thus, the minimum survival wage rate places a biological ceiling on the rate of population growth and the right hand side origin in Figure 6.3 will exhibit a smaller rightward shift.

If the economy is in a situation such as this, economic development becomes extremely difficult. Any small increase in developmental effort is offset by an increase in the rate of population growth. To break out of this dilemma requires an effort of major proportions since productivity increases must be attained which will be of sufficient magnitude to allow the subsistence wage rates to increase in spite of the increases in population.[1]

If the assumption of a perfectly inelastic labor supply is relaxed, the consequences of population growth remain essentially unaltered if the supply curve is merely assumed to shift to the right. If the rate of population growth is assumed to be a function of the subsistence wage rate, then the rate of shift of the labor supply curve is also a function of the wage rate. If this shift of the labor supply curve is sufficiently large to prevent the wage rate from rising, or if the maximum shift possible is dictated by starvation resulting from the low wage rate in the subsistence sector, a low-level equilibrium trap exists.

Food aid and population growth If an economy is in a situation such that the rate of population growth is restrained by the income levels in the subsistence sector, the introduction of food aid may

---

[1] It is considerations such as the above which have led to a proliferation of low-level equilibrium traps. See, for example, Leibenstein (31) and Jorgenson (23).

result in an increase in the rate of population growth. Particularly if the aid is given in the form of grants to consumers, the economy would appear to become even more dependent on foreign aid since the grants form of aid does not stimulate productivity increases. Thus, the aid would result in an increase in population which will not be sustainable upon termination of this aid. Food aid distributed in the form of work projects would also lead to a similar population increase, but this form of aid would result in some offsetting productivity increases.

Market sales distribution of aid would not lead to increases in population growth like grants or work projects distribution. As discussed in Chapter V, market sales tend to depress the market price for agricultural goods resulting in a reduction of the wage rate earned in the subsistence sector. This may result in a restriction of the rate of population growth.

LITERATURE CITED

1. Adelman, Irma and Morris, Cynthia Taft, "An Econometric Model of Socio-economic and Political Change in Unverdeveloped Countries," American Economic Review, LVIII (December, 1968), 1185-1218.

2. Bellerby, J. R., Agriculture and Industry: Relative Income (London: Macmillan and Co. Ltd., 1956).

3. Bhagwati, Jagdish, The Economics of Underdeveloped Countries (New York: McGraw-Hill Book Co., 1966).

4. Bhagwati, Jagdish N. and Chakravarty, Sukhamoy, "Contributions to Indian Economic Analysis: A Survey," American Economic Review, LIX (September, 1969, Part 2), 2-73.

5. Brewster, John M., "Traditional Social Structures as Barriers to Change," in Southworth, Herman M. and Johnston, Bruce F., eds., Agricultural Development and Economic Growth (Ithaca: Cornell University Press, 1967), pp. 66-98.

6. Chakravarty, S., "The Existence of an Optimum Savings Program," Econometrica, XXX (January, 1962), 178-187.

7. Chakravarty, S. and Eckaus, R. S., "Choice Elements in Intertemporal Planning," in Rosenstein-Rodan, P. N., ed., Capital Formation and Economic Development (Cambridge: The M.I.T. Press, 1964), pp. 68-82.

8. Clark, Colin, The Conditions of Economic Progress (London, Macmillan and Co. Ltd., 1957).

8a. Dixit, Avinash K., "Marketable Surplus and Dual Development," Journal of Economic Theory, I(August, 1969), 203-219.

9. Eckaus, R. S., "The Factor Proportions Problem in Underdeveloped Areas," American Economic Review, XLV (September, 1955), 539-565.

10. Eicher, Carl and Witt, Lawrence, eds., Agriculture in Economic Development (New York, McGraw-Hill Book Co., 1964).

11. Enke, Stephen, "Economists and Development: Rediscovering Old Truths," Journal of Economic Literature, VII (December, 1969), 1127-1139.

12. Fei, John C. H. and Ranis, Gustav, "Agrarianism, Dualism, and the Economic Development," in Adelman, Irma and Thorbecke, Erik, eds., The Theory and Design of Economic Development (Baltimore, Johns Hopkins Press, 1966), pp. 3-41.

13. Fei, John C. H. and Ranis, Gustav, "Agriculture in the Open Economy," in Thorbecke, Erik, ed., The Role of Agriculture in Economic Development (New York: Columbia University Press, 1969), pp. 129-159.

14. Fei, John C. H. and Ranis, Gustav, Development of the Labor Surplus Economy (Homewood: Richard D. Irwin, Inc., 1964).

15. Georgescu-Roegen, N., "Economic Theory and Agrarian Economics," Oxford Economic Papers, XII (February, 1960), 1-40.

15a. Gerschenkron, Alexander, Economic Backwardness in Historical Perspective (Cambridge: Harvard University Press, 1962).

16. Harris, John R. and Todaro, Michael P., "Migration, Unemployment and Development: A Two Sector Analysis," American Economic Review, LX (March, 1970), 126-142.

17. Higgins, Benjamin, Economic Development rev. ed. (New York: W. W. Norton and Co. Inc., 1968).

18. Hirschman, Albert O., The Strategy of Economic Development (New Haven: Yale University Press, 1969).

19. Hoselitz, Bert F., Sociological Aspects of Economic Growth (Glencoe: The Free Press, 1960).

20. Johnson, Sherman E., "Combining Knowledge, Incentives, and Means to Accelerate Agricultural Development," in Center for Agriculture and Economic Development, Economic Development of Agriculture (Ames, Iowa State University Press, 1965), pp. 209-223.

20a. Johnston, Bruce F., "Agriculture and Structural Transformation in Developing Countries: A Survey of Research," Journal of Economic Literature, VIII (June, 1970), 369-404.

21. Johnston, Bruce F. and Cownie, John, "The Seed-Fertilizer Revolution and Labor Force Absorption," American Economic Review, LIX (September, 1969), 569-582.

22. Johnston, Bruce F. and Mellor, John W., "The Role of Agriculture in Economic Development," American Economic Review, LI (September, 1961), 566-593.

23. Jorgenson, Dale W., "The Development of a Dual Economy," Economic Journal, LXXI (June, 1961), 309-334.

24. Jorgenson, Dale W., "The Role of Agriculture in Economic Development: Classical versus Neoclassical Models of Growth," in Wharton, Clifton R. Jr., ed., Subsistence Agriculture and Economic Development (Chicago: Aldine Publishing Co., 1969), pp. 320-348.

25. Jorgenson, Dale W., "Testing Alternative Theories of the Development of a Dual Economy," in Adelman, Irma and Thorbecke, Erik, eds., The Theory and Design of Economic Development (Baltimore: Johns Hopkins Press, 1966), pp. 45-60.

26. Kao, Charles H. C., Anschel, Kurt R. and Eicher, Carl K., "Disguised Unemployment in Agriculture: A Survey," in Eicher, Carl and Witt, Lawrence, eds., Agriculture in Economic Development (New York: McGraw-Hill Book Co., 1964), pp. 129-144.

27. Kuhn, H. W. and Tucker, A. W., "Nonlinear Programming," in Neyman, Jerzy, ed., Proceedings of the Second Berkeley Symposium on Mathematical Statistics and Probability (Berkeley: University of California Press, 1951), pp. 481-492.

28. Kuznets, Simon, "Economic Growth and the Contribution of Agriculture: Notes on Measurements," International Journal of Agrarian Affairs, III (April, 1961), 59-75.

29. Kuznets, Simon, Modern Economic Growth (New Haven: Yale University Press, 1966).

30. Kuznets, Simon, Six Lectures on Economic Growth (Glencoe: The Free Press, 1959).

31. Leibenstein, Harvey, Economic Backwardness and Economic Growth (New York: John Wiley and Sons, Inc., 1957).

32. Lewis, W. Arthur, "Comment," in Thorbecke, Erik, ed., The Role of Agriculture in Economic Development (New York: Columbia University Press, 1969), pp. 159-163.

33. Lewis, W. Arthur, "Economic Development with Unlimited Supplies of Labour," Manchester School of Economic and Social Studies, XXII (May, 1954), 139-191.

34. Lewis, W. Arthur, The Theory of Economic Growth (London: George Allen and Unwin, Ltd., 1955).

35. Lewis, W. Arthur, "Unlimited Labour: Further Notes," Manchester School of Economic and Social Studies, XXVI (January, 1958), 1-32.

36. Marglin, Stephen A., "Comment," in Adelman, Irma and Thorbecke, Erik, eds., The Theory and Design of Economic Development (Baltimore: Johns Hopkins Press, 1966), pp. 60-66.

37. Meier, Gerald M., Leading Issues in Development Economics (New York: Oxford University Press, 1964).

38. Mellor, John W., The Economics of Agricultural Development (Ithaca: Cornell University Press, 1966).

39. Mellor, John W., "The Green Revolution - New Potentials for Development," Cornell University, Dept. of Ag. Econ. Cornell International Development Mimeo. 26 (1969).

40. Mellor, John W., "Toward a Theory of Agricultural Development," in Southworth, Herman M. and Johnston, Bruce F., eds., Agricultural Development and Economic Growth (Ithaca: Cornell University Press, 1966), pp. 21-60.

41. Myrdal, Gunnar, Asian Drama (New York: Pantheon, 1968).

42. Navarrete, Alfredo, Jr., and Navarrete, Ifigenia M. De, "Underemployment in Underdeveloped Economies," International Economic Papers, III (1953), 235-239.

43. Nicholls, William H., "An 'Agricultural Surplus' as a Factor in Economic Development," Journal of Political Economy, LXXI (February, 1963), pp. 1-29.

44. Nicholls, William H., "The Place of Agriculture in Economic Development," in Berrill, Kenneth, ed., Economic Development with Special Reference to East Asia (New York: St. Martin's Press Inc., 1964), pp. 336-371.

45. Nurkse, Ragnar, Problems of Capital Formation in Underdeveloped Countries (New York: Oxford University Press, 1953).

46. Ojala, E. M., Agriculture and Economic Progress (London: Oxford University Press, 1952).

47. Owen, Wyn F., "The Double Developmental Squeeze on Agriculture," American Economic Review, LV (March, 1965), 43-70.

48. Prebisch, Raul, "Commercial Policy in Underdeveloped Countries," American Economic Review, XLIX (May, 1959), 251-273.

49. Ranis, Gustav and Fei, John C. H., "A Theory of Economic Development," American Economic Review, LI (September, 1961), 533-565.

49a. Reynolds, Lloyd G., "Economic Development with Surplus Labor: Some Complications," Oxford Economic Papers, XXI (March, 1969), 89-103.

50. Rosenstein-Rodan, P. N., "Problems of Industrialization of Eastern and Southeastern Europe," Economic Journal, LIII (June-September, 1943), 202-211.

51. Rostow, W. W., The Process of Economic Growth 2nd ed. (New York: W. W. Norton and Co., Inc., 1962).

52. Rostow, W. W., ed., The Economics of Take-Off into Sustained Growth, London, Macmillan and Co. Ltd. 1963.

53. Ruttan, Vernon W., "Growth Stage Theories and Agricultural Development Policy," Australian Journal of Agricultural Economics, IX (June, 1965), 17-32.

54. Ruttan, Vernon W., "Growth Stage Theories, Dual Economy Models and Agricultural Development Policy," University of Guelph, Dept. of Ag. Econ. Pub. No. AE 1968/2 (1968).

55. Ruttan, Vernon W., "Two Sector Models and Development Policy," in Wharton, Clifton R. Jr., ed., Subsistence Agriculture and Economic Development (Chicago: Aldine Publishing Co., 1969), pp. 353-360.

56. Schultz, Theodore W., "Comment," in Southworth, Herman M. and Johnston, Bruce F., eds., Agricultural Development and Economic Growth (Ithaca: Cornell University Press, 1966), pp. 61-65.

57. Schultz, Theodore W., Transforming Traditional Agriculture (New Haven: Yale University Press, 1964).

58. Sen, A. K., "Peasants and Dualism with or without Surplus Labor," Journal of Political Economy, LXXIV (October, 1966), 425-450.

59. Thorbeck, Erik, ed., The Role of Agriculture in Economic Development (New York: Columbia University Press, 1969).

60. Tinbergen, Jan, The Design of Development (Baltimore: Johns Hopkins Press, 1958).

61. Todaro, Michael P., "A Model of Labor Migration and Urban Unemployment in Less Developed Countries," American Economic Review, LIX (March, 1969), 138-148.

62. Viner, Jacob, International Trade and Economic Development (Oxford: The Clarendon Press, 1953).

63. Waterston, Albert, Development Planning: Lessons of Experience (Baltimore: Johns Hopkins Press, 1965).

64. Wharton, Clifton R. Jr., "The Green Revolution: Cornucopia or Pandora's Box?" Foreign Affairs, XLVII (April, 1969), 464-476.

65. Whyte, William F. and Williams, Lawrence K., Toward an Integrated Theory of Development. Cornell University, New York State School of Industrial and Labor Relations ILR Paperback No. 5 (February, 1968).

66. Witt, Lawrence W., "Role of Agriculture in Economic Development - A Review," Journal of Farm Economics, XLVII (February, 1965), 120-131.

67. Zimmerman, L. J., Poor Lands, Rich Lands: The Widening Gap (New York: Random House, 1964).