PN-ABJ-187

REQUIREMENTS FOR A PLANT TO MANUFACTURE AGRICULTURAL TOOLS

AN ESTIMATE
Prepared for

FOREIGN OPERATIONS ADMINISTRATION

Washington, D. C.

Requirements for a Plant to Manufacture Agricultural Tools

631.304 Methods Engineering Council. NTIS
M592 Requirements for a Plant Manufacture Agricultural Tools. Nov. 1953.
18 p.
Prepared for FOA.

1. Agricultural implements. 2. Industrial plants. I. Title.

72-28
PN-ABJ-187

Donald E. Farr
Vice President

Lawrence B. Grella
Managing Consultant

Richard A. Bailey
Henry R. Fichter
Dudley M. Wells
Staff Consultants

November 10, 1953

REQUIREMENTS FOR A PLANT TO MANUFACTURE AGRICULTURAL TOOLS

AN ESTIMATE
Prepared for

FOREIGN OPERATIONS ADMINISTRATION
Washington, D. C

This report presents a general design of three agricultural tools needed in under-developed countries It gives a general method of manufacturing these tools, a preliminary layout of the factory, and the cost of establishing the factory and manufacturing the tools.

OBJECTIVE:

This project was undertaken in order to prepare estimates of the cost of establishing and operating a factory to manufacture 25 plows, 25 harrows, and 50 scythes per day.

RESULTS:

From the study we have made of the problem, we estimate the requirements for this installation are as follows:

Size of Building	10,000 square feet
Number of employees	
Direct labor	31
Indirect labor	13
Total	43
Cost of Building	$ 32,000
Cost of Equipment	161,930
Value of Raw Inventory	12,350
Operating Capital	25,000
Unit Cost of Products	
Plow	$ 6.08
Harrow	7.11
Scythe	.91

PROCEDURE:

Our first step was to obtain a general picture of the type and style of farm implements most satisfactory for use in Asia, Africa, and Latin America. We examined many documents on the subject, in finding this information.

Small implements, we found, are the most commonly used agricultural tools. They have maintained their importance in countries where farming operations are chiefly, or partly, performed by manual labor. Many of the instruments used today are quite crude in construction. They follow designs passed down through centuries with little, if any, improvement. Yet it appears to be a fact that improvement in the basic tools employed would result in improved cultivation and yield.

The problem is not simple. To be acceptable and useful, these improved tools must meet a variety of conditions. Centuries of use have conditioned these people to use certain types of basic tools. Farm holdings are generally small and scattered. A wide variety of soil and climatic conditions are encountered. Money is scarce and exchange limited. Literacy is low. These and many other factors limit the peasant farmer's ability to acquire and used improved tools and methods.

We, therefore, set up the following conditions in selecting the tool design most applicable to the situation:

Simplicity of style
Easy to use
Light weight for easy transportation
Simple to maintain and repair
Durable
Low in cost
Possible to be locally produced.

It was necessary for us to make certain assumptions before we could proceed with the problem. These assumptions are:

1. All equipment will be purchased in the United States.

2. All materials will be priced at current U. S. market prices.

3. Adequate transportation facilities will be available at the plant site.

After the initial research and survey work was completed, we established the general design of each of the three items to be manufactured. The designs are detailed only to the extent that is necessary to establish a reasonable estimate of the manufacturing processes and costs. Sketches shown in Figures 1, 2, and 3 show the tools on which the estimates are based.

We next compiled lists of parts for the plow, harrow, and scythe. We detailed the operations required to manufacture each of the individual parts. The type of equipment to be used for each operation was also specified at this time. In selecting the equipment, the requirements of all three finished products were considered. Wherever possible, we specified equipment that will be suitable for a variety of operations on each of the three products. The machines which we selected are a compromise between high investment cost with low resulting labor cost, and low investment cost with resulting high labor cost. In general, we favored the latter combination because of the low labor rate expected at the site of operation. The low quantity production also rules out expensive high production equipment.

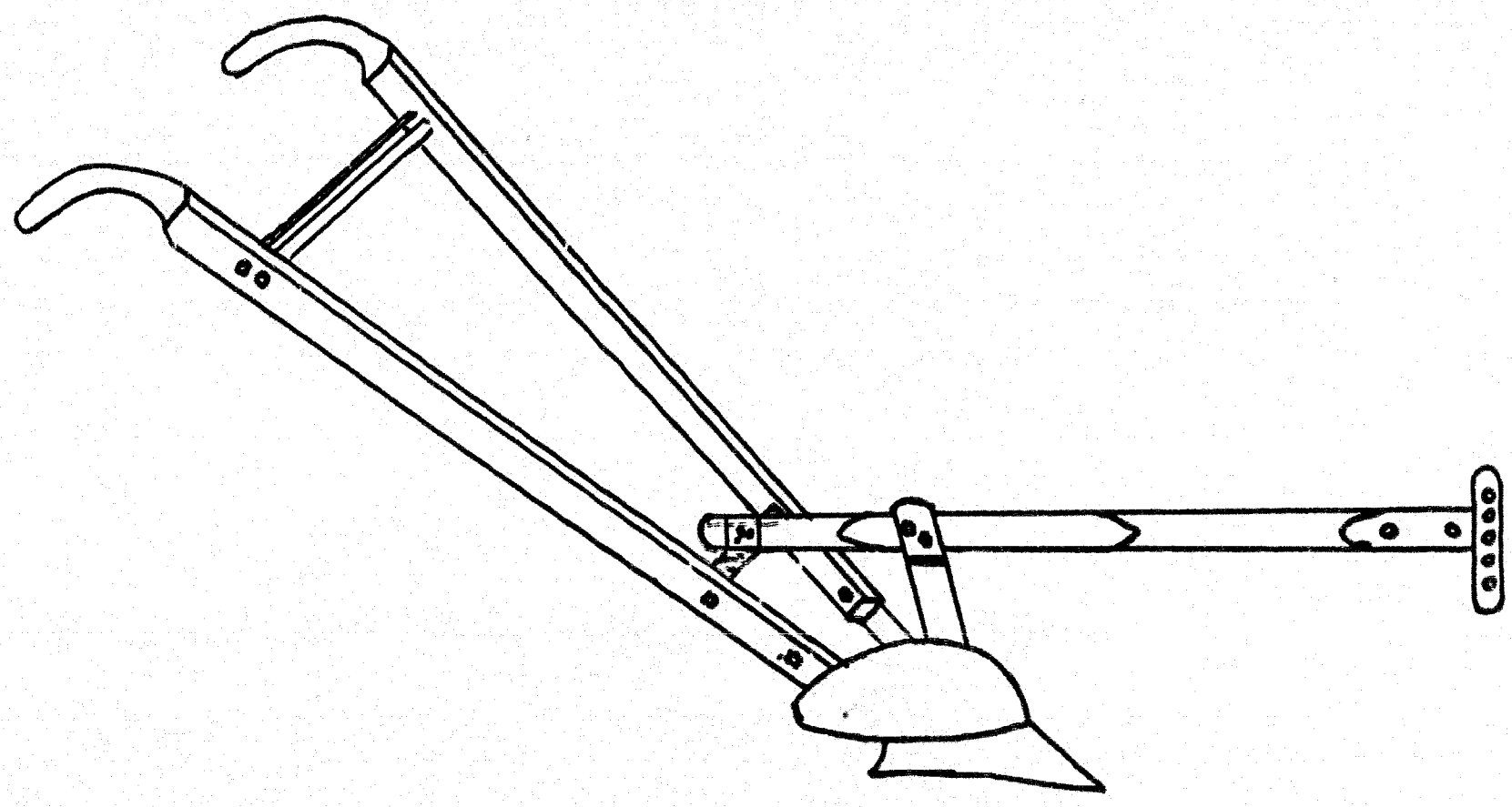

Plow
Figure 1

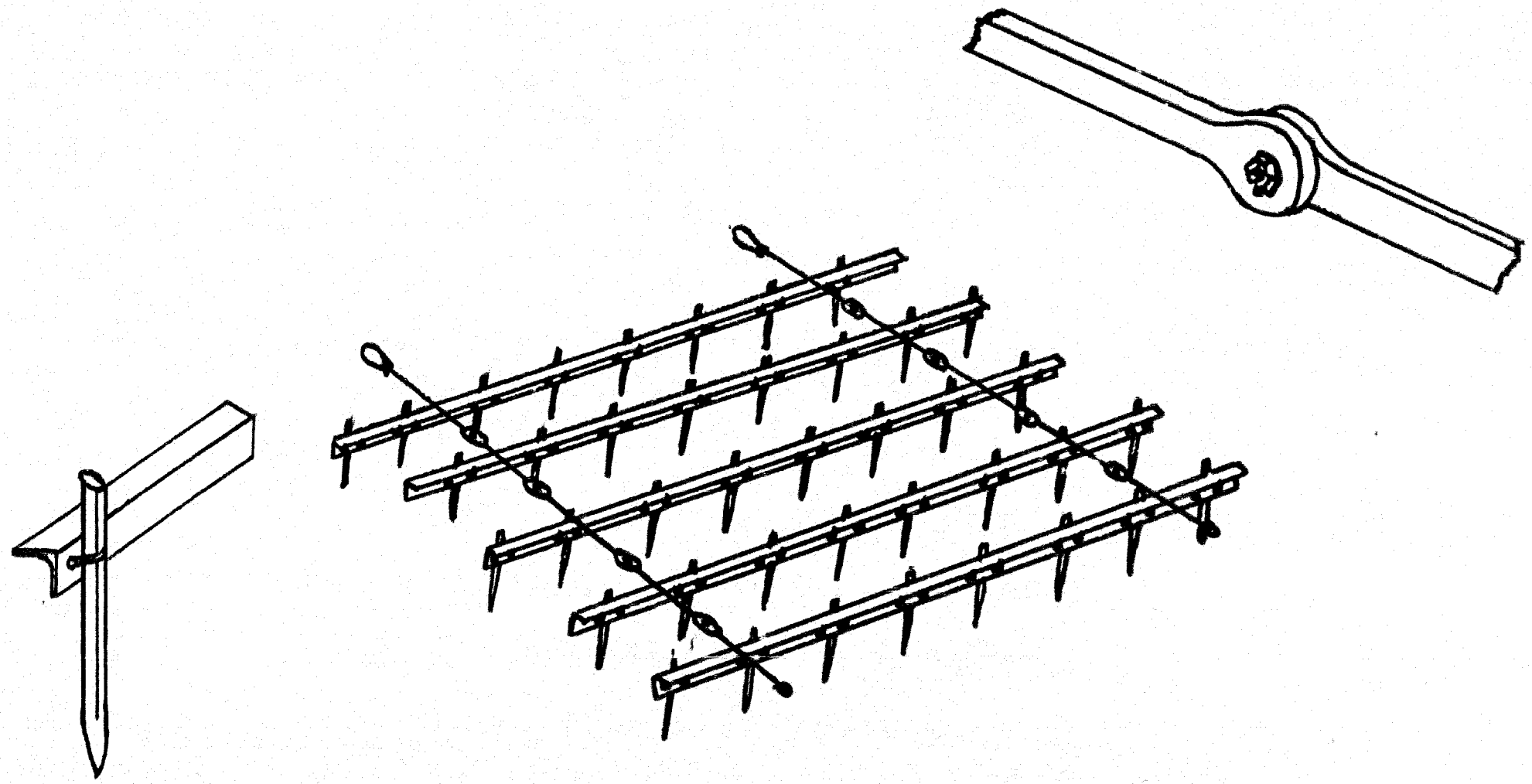

Harrow
Figure 2

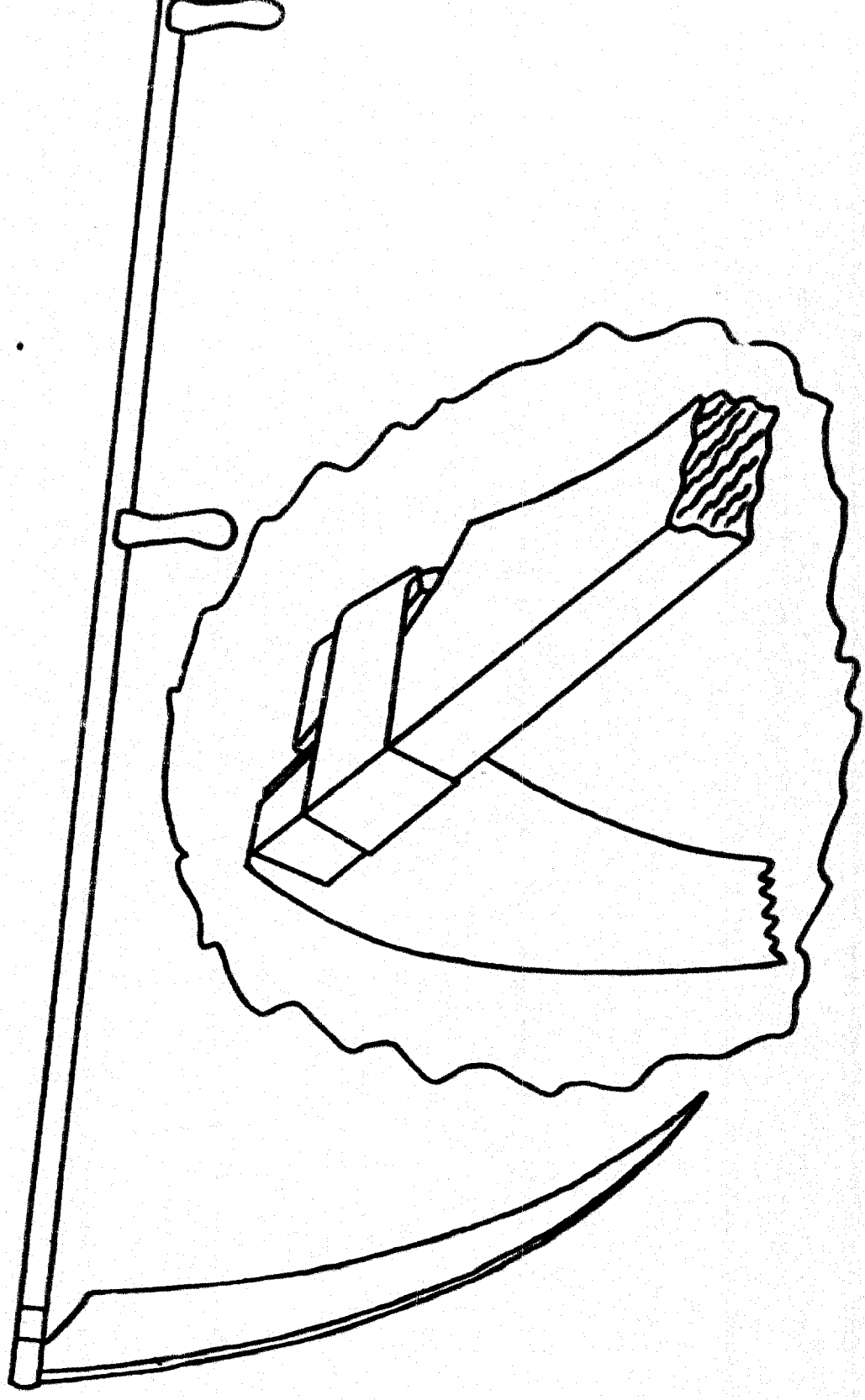

Scythe
Figure 3

Knowing what equipment is to be used for each operation, we were then able to place estimated times on the individual operations. From the estimated times we determined how many hours per day each machine or piece of equipment would be used. This is based upon a daily production of 25 plows, 25 harrows, and 50 scythes. A number of machines must be operated more than 8 hours a day in order to meet these production figures. This is accomplished by using duplicate machines and/or operating more than 8 hours per day. The more expensive machines are to be operated 2 shifts a day, rather than to buy additional equipment. Duplicate machines of the less expensive kind are specified so that the second shift operations can be kept to a minimum.

Chart A lists the production equipment required, estimated number of production hours per day on each machine, quantity of each required, and estimated cost. Some of the woodworking equipment listed is used for only a few production hours each day. However, these are basic tools that would be used a great deal for general plant maintenance work.

In order to recondition and maintain the tools and machines in the factory, it is necessary to have a fairly complete machine shop in the tool room.

PRODUCTION EQUIPMENT REQUIREMENTS

Machine	Required Hours for One Day's Production				Machines Required	Price Each	Total Price
	Plow	Harrow	Scythe	Total			
25-ton Press	7.5	10.6	1.9	20.0	2*	$ 2,000	$ 4,000
Air Compressor					1	6,200	6,200
2000# Drop Hammer	2.0	11.2	1.3	14.5	1*	16,400	16,400
Do-All Saw	21.0		6.3	27.3	2*	4,200	8,400
Hand Grinder	2.3		1.7	4.0	1	80	80
Forging Furnace		10.5	3.8	14.3	1*	3,000	3,000
Heat Treat Furnace and Quench. Tank	3.0	1.7	1.3	6.0	1	8,000	8,000
Radial Saw	3.7		3.8	7.5	1	800	800
Band Saw			.8	.8	1	1,400	1,400
Hand Sander	2.0		1.3	3.3	1	100	100
3/4" Drill Press	1.0	2.6	3.5	7.1	1	225	225
Wood Lathe	2.8		1.3	4.1	1	400	400
Arc Welder	7.0	4.3	.9	12.2	2	400	800
Power Hack Saw	2.1	17.0	.3	19.4	2*	600	1,200
#2 Milling Machine	12.3			12.3	1*	9,000	9,000
Steam Generator	4.4			4.4	1	200	200
Bending Table	4.4			4.4	1	150	150
Hand Brake	.3			.3	1	150	150
Paint Dip Tank	2.7	.8	.3	3.8	1	200	200
Brinnell Tester					1		500
Thr'd'g. Machine	.3	13.0		13.3	1*	1,000	1,000
Dip Tank - for Wood	.6		.25	.85	1		200
Power Wrench } Assembly }	6.2	4.2	1.5	11.9	2 -	150 -	300 -
							$62,705

A factory of this size would not require the full time use of this machine shop, however. This will make it possible for one such shop to provide the reconditioning services for several similar plants in the same area. We suggest the following machines for tool room use:

	Estimated Cost
1 - #2 Universal Milling Machine	$12,000
1 - 36" Universal Shaper	12,000
1 - 10" x 20" Tool Room Lathe	7,000
1 - Tool Grinder	4,100
1 - Surface Grinder	12,000
1 - Pedestal Grinder	200
1 - Drill Press	225
Total	$47,525

Since all 3 products of this plant will be produced on the same pieces of equipment, the operation does not lend itself to straight line production methods. It is more logical to group the machines according to the type of operations performed on them. We have, therefore, grouped the machines and production equipment into departments as listed here:

1. Raw Material Storage and Steel Cut Off
   - 2 - Power Hack Saws

2. Wood working
   - 1 - Radial Saw
   - 1 - Band Saw
   - 1 - Drill Press
   - 1 - Lathe
   - 1 - Hand Sander
   - 1 - Steam Generator
   - 1 - Bending Table
   - 1 - Layout Table

3. Press and Machine Shop

1 - 2000-lb. Drop Hammer

2 - 25-ton Crank Presses

2 - Do-All Saws

1 - Forge Furnace

1 - Heat Treat Furnace

1 - Quench Tank

1 - Jib Crane

1 - #2 Milling Machine

1 - Hand Brake

1 - Threading Machine

1 - Brinnell Tester

1 - Hand Grinder

4. Welding

2 - Arc Welders

2 - Welding Tables

5. Paint and Assembly

3 - Benches

2 - Dip Tanks

2 - Power Wrenches

6. Receiving and Shipping

1 - Desk and Chair

1 - Filing Cabinet

7. Finished Stores

Storage Racks

Storage Bins

8. Tool Room

1 - #2 Universal Milling Machine
1 - 36" Universal Shaper
1 - 10" x 20" Tool Room Lathe
1 - Tool Grinder
1 - Surface Grinder
1 - Pedestal Grinder
1 - Drill Press
1 - Jib Crane

9. Office

5 - Desks and Chairs
4 - Filing Cabinets
2 - Typewriters
1 - Adding Machine

From the required hours of operation for each machine, it was determined that a direct labor force of 31 people is required. For a labor force of this size it is necessary for the operators to be qualified to operate more than one machine. It is estimated that an indirect labor force of 13 people will be required. This is a total of 44 people for the entire plant. The labor distribution is as follows:

Raw Material Storage and Steel Cut Off (2-shift operation)	6 Men
Woodworking	4
Press and Machine Shop	15
Welding	2
Paint and Assembly	3
Receiving and Shipping	1
Tool Room	3
Office	4
Foremen - 2 shifts	3
Superintendent	1
Materials Handling and Janitor	2

The number of labor hours shown for manufacturing the three finished products is not as much as is available from the 31 direct labor people. The difference of about 20% is attributable to the attempt made to utilize the equipment to its fullest extent. Due to the high equipment cost and the low labor rate, it is more economical to have idle man time than idle machine time, when there is a choice.

We next established the material requirements for the plow, harrow, and scythe. These requirements for one day's production are:

	Plow	Harrow	Scythe	Total
Rolled Section		1,125 lbs.		1,125 lbs.
Bar Stock	44 lbs.	881 lbs.	22 lbs.	947 lbs.
Sheet			190 lbs.	190 lbs.
Plate	1,196 lbs.			1,196 lbs.
Wood	81 bd. ft.		83 bd. ft.	164 bd. ft.
Hardware	79 lbs.	100 lbs.	24 lbs.	203 lbs.

If materials are to be imported, a 3-month inventory of raw material should be carried at the plant. This is equal to:

Steel	109 tons @ $87	$9,483
Wood	10,330 bd. ft. @ $.03	310
Hardware	12,790 lbs. @ $.20	2,558
	Total Value	$12,351

This plant will probably be located in a remote area where electric power is not available. It is then necessary to provide a Deisel generator unit to supply the electricity. The power consumption of the machine tools and lighting equipment will be approximately 165 kilowatts. We have, therefore, specified a 200 KW Diesel generator unit to supply 60 cycle, 220 volt power. The estimated cost of this unit is $30,000, including the necessary switchgear equipment.

The next problem is to determine the amount of space needed to perform the specified operations with the chosen equipment. We allotted sufficient floor space to each machine to allow free movement of the operator, plus space for temporary storage of in-process material. Sufficient space for the raw material storage was allotted to accommodate a 3-month inventory. A finished stores area was added to permit stocking finished parts before final assembly. Space for adequate aisles was also included. In all, we estimate a total floor space of 10,000 square feet is required. This is divided approximately as follows:

Office	400 square feet
Receiving and Shipping	400 square feet
Rest Rooms	300 square feet
Tool Room	1,100 square feet
Stock Room	1,200 square feet
Steel Cut Off	300 square feet
Woodworking	700 square feet
Press and Machine Shop	1,600 square feet
Welding	700 square feet
Paint and Assembly	1,100 square feet
Finished Stores	500 square feet
Deisel Generator	200 square feet

A preliminary rough layout of the plant is shown in Figure 4.

The Quonset type steel buildings should be adequate for this plant. The cost of erecting two 60' x 84' buildings of this kind and installing the necessary wiring and plumbing is estimated at $32,000.

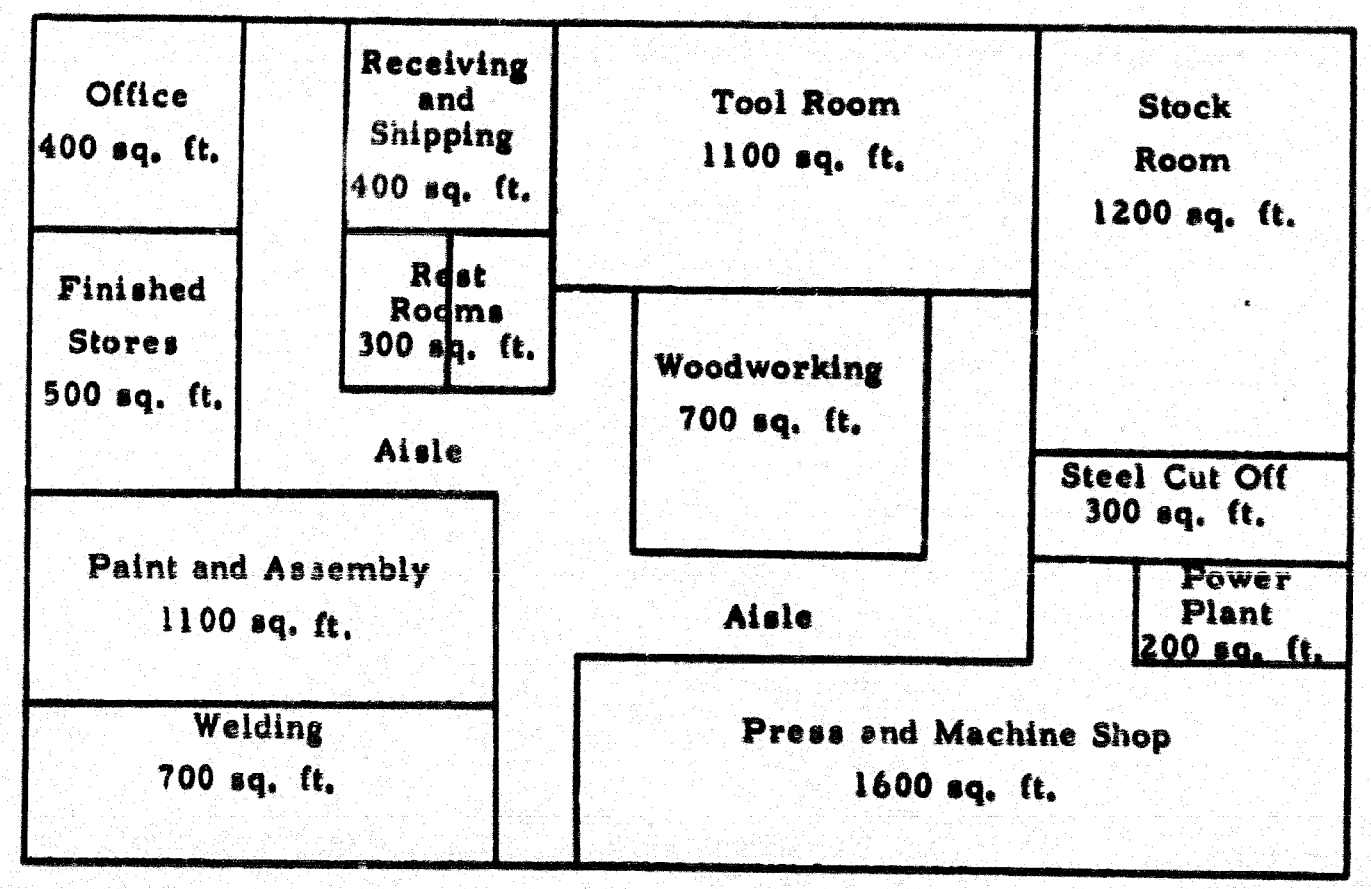

Scale: 1/2" = 10 ft.

Preliminary Plant Layout

Figure 4

Additional items that must be included in the cost of establishing the plant are:

Cutting tools, dies, jigs, fixtures, hand tools	$13,100
Fork truck	3,500
5-ton hand operated overhead crane	2,500
Two jib cranes	600
Office equipment	2,000
Total	$21,700

The following is a summary of the estimated costs:

Building	$32,000
Production tools	62,705
Tool room equipment	47,525
Cutting tools, jigs, dies, cranes, office equipment, etc.	21,700
Diesel generator	30,000
Initial inventory	12,351

The overhead rate has been calculated per direct labor hour. All labor, both direct and indirect, is figured at $.30 per hour. It is not expected that the local labor at the plant site will be higher than this. The overhead rate is determined as follows:

Item	Cost	Depreciation per Year
Building	$32,000	$1,600
Material Handling Equipment	6,600	1,010
Non-durable Tools	13,100	6,550
Machine Tools and Production Equipment	110,230	12,523
Diesel Generator	30,000	3,000
Office Equipment	2,000	400
Office Supplies	2,000	2,000
		$27,083

Weekly Depreciation	$521
520 hours Indirect Labor per week @ $.30 per hour	156
Power, Light, and Heat per week	100
	$777

$$\text{Overhead per direct labor hour} = \frac{777}{31 \times 8 \times 5} = \$.63$$

We can calculate the unit cost of manufacturing the plow, harrow, and scythe.

	Plow	Harrow	Scythe
Labor	$1.03	$ .91	$ .19
Material	2.89	4.29	.33
Overhead	2.16	1.91	.39
Total	$6.08	$7.11	$ .91

The only remaining factor to be determined is the amount of the operating capital. The estimate for this consists of the following items:

Raw Inventory -- 3 months' production	$12,351
In-process Inventory -- 1 day's production	196
Finished Goods Inventory -- 2 days' production	392
Accounts Receivable -- 1 month's production	6,081
Expenses for one month Wages Utilities Material Purchases	6,628
Total	$25,648

We have rounded this off to a suggested figure of $25,000.

CONCLUSIONS:

We have specified certain equipment and plant facilities for the manufacture of a plow, harrow, and scythe of simple design. The operations required to make these products are similar to the operations that would be necessary to make other basic agricultural tools. Thus, the same equipment that we have suggested can be used to make such things as hoes, hand sickles, hand cultivators, and disc harrows. The productive capacity of the plant can be greatly increased by adding only a few additional machines of the right type. This is a very flexible plan that can be easily changed to manufacture a number of other tools needed in the areas where the factories are located.

November 10, 1953

Methods Engineering Council
Pittsburgh 21, Pennsylvania