621.64
P115

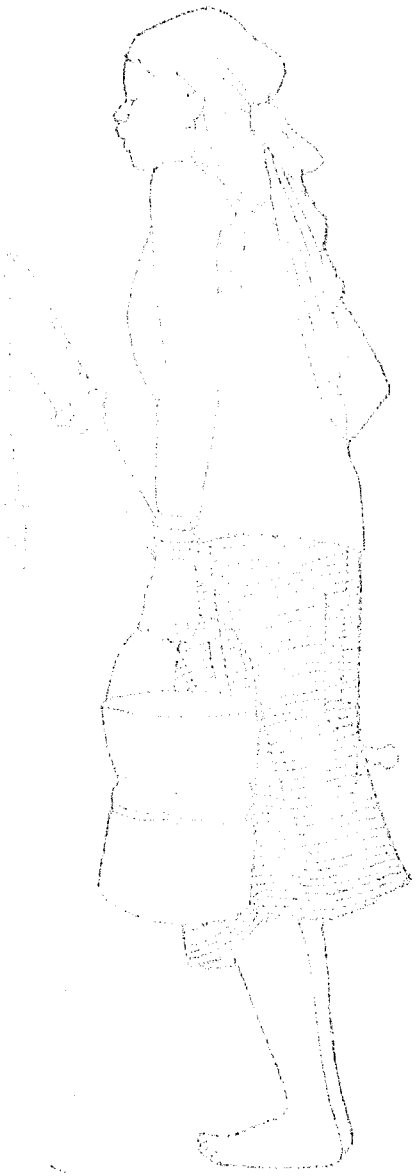

In the context of community well projects

An Oxfam document compiled by Arnold Pacey

Intermediate Technology

Hand pump maintenance in the context
of community well projects

621.64
P115

Pacey, Arnold.
Hand pump maintenance in the context of community well projects : an Oxfam document / compiled by Arnold Pacey. -- London : Intermediate Technology Publications, 1977.
38 p. : ill. ; 21 cm.
First published by Oxfam, Oxford, under the title: Hand pump maintenance and the objectives of community well projects, October, 1976.
1. Pumping machinery. 2. Pumping stations. 3. Wells. 4. Community development. 5. Appropriate technology. I. Oxfam. II. Title III. Title: Hand pump maintenance and the objective s of community well projects.

01 JUL 82 6401494 AIDAdc

PN-ABJ-034

Hand Pump Maintenance

in the context of community well projects

An Oxfam document
compiled by
Arnold Pacey

Agency for International Development
Library
Room 1656 NS
Washington, D.C. 20523

Intermediate Technology Publications Ltd.

First published by Oxfam, Oxford, under the title *Hand Pump Maintenance and the Objectives of Community Well Projects*, October 1976.

This edition published by Intermediate Technology Publications Ltd, 9 King Street, London WC2E 8HN, UK, August 1977.

Second Impression, June 1978

Revised Edition, April 1980

© Oxfam and Intermediate Technology Publications Ltd, 1977

ISBN 0 903031 70 1

Printed by the Russell Press, Gamble Street, Nottingham NG7 4ET

Acknowledgements

I am greatly indebted to a number of people for answering queries, providing information, or for corresponding with me about hand-pumps. My greatest debts are to Charles Heinemen of Madurai, south India; to A. P. Mangalam of Coimbatore; to Colin Allsebrook of Reading; to various OXFAM and UNICEF staff members; and to several of the manufacturers of pumps mentioned in the report.

I have particularly valued the advice and comment offered by several UNICEF staff, especially Martin G. Beyer (New York), R. K. Stoelzel (New Delhi) and John Shawcross (Dacca). Although suggestions from these people have added considerably to the content of this manual, responsibility for statements made rests entirely with me. The pump manufacturers who have answered enquiries, and to whom I am grateful for figures 1, 3 and 6 are Craelius Terratest Ltd of Nairobi; Dempster Industries of Beatrice, Nebraska; H. J. Godwin Ltd of Quenington, Gloucestershire; Lee Howl & Co Ltd of Tipton, West Midlands; Etablissements Mengin of Montargnis, France; Mono Pumps Engineering Ltd of London; and Water Supply Specialists Ltd of Bombay.

Figure 4 has been re-drawn from illustrations provided by various correspondents in India. Copyright of figures 4 and 5 belongs to the United Nations, for whom they were both originally prepared.

The copyright of the whole of the text is now held jointly by Oxfam and I.T. Publications Ltd. (despite the fact that certain passages have also been used in the WHO draft *Guideline on Hand Pumps* by F. Eugene McJunkin). There is no intention of using this copyright restrictively, though, and technical detail may be freely quoted. We do, however, request that specific references to OXFAM policies or OXFAM-supported projects are checked with us before being quoted. The same courtesy should be extended to other agencies referred to in this manual.

Arnold Pacey,
Oxford

Contents

Preface		5
Reference Key		5
Introduction		6
Part I	Analysis (paragraphs 1-7)	9
Part II	Strategies (paragraphs 8-16)	14
Appendix 1	Some Hand-pump Manufactures	41
Appendix 2	Wind-pump Manufacturers and Designs	42
	Wind-pump Designs	43

Summary

Part I of this manual gives estimates of the numbers of wells and boreholes in some current development programmes, and points out that anything up to 60% of the hand-pumps used at these wells have broken down within a short time of installation. A discussion and analysis of reasons for this high failure rate follows in paragraphs 2-7.

Part II puts forward three strategies for projects involving hand-pumps, any one of which should ensure successful operation of the pump if followed through consistently. These three strategies are:

(a) total village self-reliance (paragraph 9)
(b) partial self-reliance (paragraph 10, figure 1)
(c) elimination of village responsibility (paragraph 11, figures 2 & 3)

The second of these strategies is regarded as the most widely applicable, and is discussed at greater length in paragraphs 13 and 14.

Finally, some new types of manually operated pumps are described (paragraph 15) and a comparison is made with maintenance problems encountered in operating wind-pumps (paragraph 16).

Preface

This booklet is intended to be the first of a series on Socially Appropriate Technology. One purpose of these booklets is to present ideas and information about the relationship between *technology* and *social organisation*, based on field reports describing practical experience rather than sociological theory.

Reference Key

The particular field reports which have been used in writing this manual are referred to in the text by agency initials or Oxfam file numbers, to which the following key applies:

CAM 12	Cameroon: village wells
ETH 11	Ethiopia: surface water development unit, Selekleka, Tigre.
ETH 83	Ethiopia: windmill irrigation, American Presbyterian Mission, Omo Station.
LES 16	Lesotho: village water supplies.
MAH 4	Maharashtra, India: pump manufacture, boreholes, Marathwada Sheti Sahayya Mandal, Jalna.
MAR 31	Maharashtra, India: pump manufacture, Sholapur Well Service.
SATA	Swiss Association for Technical Assistance: draft manual on rural water supply; reports from Cameroon.
SUD 12	Sudan: water development programme, Sudan Council of Churches, Juba.
TAN 6	Tanzania: village wells programme, Community Development Trust Fund, Dar-es-Salaam.
TN 3	Tamil Nadu, India: Coimbatore Water and Agricultural Development Project.
TN 12	Tamil Nadu, India: Madurai-Ramnad Water Resources Development Unit.
UNICEF	United Nationas Children's Fund: reports and correspondence on tubewell programmes in Bangladesh and India.
WHO	World Health Organisation International Reference Centre for Community Water Supply, draft guidelines on hand-pumps.
ZAM 17	Zambia: borehole drilling, Family Farms, Magoye.

Introduction

This booklet was originally written in 1975, at a time when there was much unhappy experience of village water supplies in developing countries. Village wells, in particular, were frequently out of use because hand-pumps broke down and were never repaired. Surveys which revealed the full extent of these breakdowns were carried out in 1974 and 1975, just at a time when the concept of "appropriate technology" was gaining wider acceptance. For many people it seemed that the simple hand-pumps installed at village wells and boreholes must be failing because they were "inappropriate" in some way.

This, however, was an incomplete diagnosis. A more fundamental reason for the poor performance of so many hand-pumps was the failure of water supply engineers to understand the *relationship* between technology *and* social organisation. It is this relationship which forms the main theme of the present booklet.

The importance of organisation needs to be emphasised because many of the efforts made to improve hand-pump performance have concentrated only on the technical aspects of the problem. Those who thought that the large number of pump breakdowns experienced during the early 1970s were due to the use of "inappropriate" technology began an intensive search for more "appropriate" hand-pumps. Thus many new pumps were invented, and elaborate laboratory testing programmes on existing pumps were undertaken. In general, the aim of such work has been to find a pump that is very robust, that requires very *little* maintenance, and that is also very *easy* to maintain. This has led to many detailed improvements in pump design (some of them described in Section 15 of this booklet) but there have not always been corresponding improvements in the performance of pumps in the villages.

Many of these attempts have been based on an inadequate understanding of the problem. A hand-pump is only appropriate if it fits the pattern of organisation, social responsibility and skill which exists in the community. Suitable pumps cannot be produced if the arrangements for maintenance and water use in the villages where they will be used are never examined. Programmes based only on laboratory tests and technical investigations can improve the construction and reliability of the hand-pumps, but can never make them more acceptable to the users without community involvement.

Therefore, advocates of appropriate technology ought to have taken the lead in emphasising the need for detailed study of the communities which the hand-pumps were meant to serve, and of ways in which pump maintenance within those communities might be organised. That they have not done so is one of the chief reasons why so few of the newly-invented and improved pumps have been successfully used on a regular basis.

Fortunately, however, there are some people to whom this criticism does not apply. In one or two countries, real improvements in the performance of hand-pumps have actually been achieved, with real benefits for village people. Significantly, this has been done through innovations in organisation and community involvement, and there is little evidence in many of the successful programmes of radical change

in technology. Success has depended more on appropriate organisation than on appropriate technology.

The best work of this kind, leading to improvements in the functioning of many thousands of village pumps, is to be found in India and Bangladesh, in government-run programmes. This booklet refers at length to these two countries. Briefly, however, the focus there has been on new maintenance procedures, on training programmes, and the production of instruction manuals. This concentration on "software" has probably contributed far more to improved pump performance than has all the work which has been dedicated to the development and testing of new pumps.

The study of local organisation and software problems has also drawn attention to hardware needs which the inventors of new pumps have sometimes neglected. For example, improvements in the tool-kit used by maintenance workers may be as important as improvements in the pump itself. During 1979, special tool-kits adapted for use in the maintenance of a widely used pump in India were produced and distributed. And in Bangladesh, the lack of maintenance and repair tools is being remedied by the introduction of a new universal wrench. This tool, known as the Bangla multi-purpose wrench, can be used for all routine servicing of standard types of pump, and replaces a whole kit of tools for one-third of the cost.

Much of the credit for recent improvements in pump performance must go to UNICEF. Not only has this agency worked hard on improvements to pumps and the production of software, but it has also encouraged the transfer of ideas from one country to another. For example, when a three-day training course was held in Sudan for hand-pump "caretakers" (described below) from 15 villages, UNICEF staff introduced ideas developed in India. Flip charts used for teaching pump maintenance were sent from India to Sudan for adaptation to local needs, and the planning of training programmes was based partly on Indian experience.

One of the innovations in organisation which UNICEF has emphasised is the idea of the community worker. This is common in health projects: village people elect one or two of their number to train as "village health workers" who then return home to undertake voluntary work in this field. Such health workers are often compared with the famous "barefoot doctors" of China though, in general, their functions are more basic, and their concern is mainly with the prevention of disease.

An important point that UNICEF has stressed is that there are many basic services (including the care of hand-pumps) that can be provided or improved by the recruitment of other types of village workers. People recruited for this work are referred to as "hand-pump caretakers". Their function varies according to what other maintenance services are available. Sometimes they merely supervise the use of the pump and report faults to a central maintenance agency. This is the situation in many parts of India. Sometimes, though, the caretakers keep a stock of spare parts for the pump and undertake almost all maintenance tasks – this is a system which has been tried in Tanzania. Caretakers may also be encouraged to talk to villagers about the health benefits to be gained by using water from the well or borehole, thereby encouraging greater use of the facility.

When the first edition of this booklet was prepared in 1975, there was so little literature available on hand-pumps that there seemed to be no point in including a bibliography. Now, however, the situation is very different, not least because of

material produced by UNICEF on and for hand-pump caretakers. The general philosophy behind the idea of the community worker is set out in a short booklet entitled *A Strategy for Basic Services* (UNICEF, New York, 1977). Material more specifically concerned with hand-pumps comes from UNICEF's New Delhi office, and is produced in various forms for local use. For example, there is a booklet entitled *Guide to Selection and Training of Village Hand-Pump Caretakers* (Tansi Press, Madras, 1977). In addition, instruction booklets in local languages are available for use by hand-pump caretakers. Some of the latter have been produced by UNICEF staff (e.g. in Bangladesh), and one has been published by the Tamil Nadu Water Supply and Drainage Board in India.

Similar material is now being produced in Africa also. In Liberia, there is an eleven-page booklet addressed to villagers entitled *How to use your Water Pump.* This warns that unless a pump is properly cared for, it will "spoil very soon and you may go without good drinking water for some time". This was published by the Rural Development Division, Ministry of Local Government in 1978.

The one major work on hand-pumps to be written in recent years is by F. Eugene McJunkin; it is entitled simply *Hand Pumps* and was published by the WHO International Reference Centre for Community Water Supply in 1977. An early version of this book, then known as the *WHO Draft Guidelines,* is quoted in Section 8 of this booklet. Another work being prepared by the same organisation is a very detailed study of hand-pump maintenance systems. Enquiries about both books may be addressed to: WHO International Reference Centre, P.O. Box 140, 2260 AC Leidschendam, Netherlands.

One final point to note is that these various books use different terms to describe pump maintenance systems. In this booklet, pump maintenance is described in terms of a "package" of items including the pump itself and the software that goes with it. This package must be designed to suit the needs of local communities, and may take many different forms. For example, if responsibility for maintenance is entirely centralised so that a regional or national water supply agency takes all responsibility, a package is created which is described in Part Two as "eliminating village-level responsibility". Other writers, though, refer to this arrangement as a "unified" or "centralised" maintenance system.

A more typical arrangement involves delegating some maintenance work to local hand-pump caretakers while the more complicated maintenance tasks are the responsibility of a government department or water supply agency. A package of this kind is partly local and partly centralised. In India it is referred to as a "two-tier" system, and in the book by McJunkin it is called a "joint central and local system". In this booklet, however, it is described as a "package for partial self-reliance" and is discussed in Section 10, and at greater length in Sections 12-14.

An understanding of these different packages and careful choice of the types of pump and software appropriate to each is the key to success in planning the maintenance of village hand-pumps.

Arnold Pacey
July 1979

Part One: Analysis

1. The size of the problem

Many governments, with the assistance of official agencies, as well as voluntary organisations, have tackled the water supply problems of rural communities in the Third World by drilling tubewell and boreholes. The size of some of these programmes is vast:

> Philippines, 1970: 19,000 drinking water wells completed, 56,000 planned (with USAID assistance).
>
> India, 1974: 150,000 drinking water wells completed within programmes having UNICEF assistance.
>
> Bangladesh, 1976: 320,000 public drinking water wells completed, 150,000 planned (many with UNICEF assistance). (There are also about 350,000 private water wells in Bangladesh).

Inevitably, Oxfam's contribution looks modest by these standards. Drilling rigs provided by Oxfam have sunk up to 10,000 drinking water wells plus many irrigation wells in India since 1966, often with state governments paying the running costs through drilling contracts. Programmes in Africa tend to be smaller, though one in Tanzania (TAN 6) has seen the completion of many hundreds of hand-dug village wells.

Despite this apparently impressive record of work completed or in hand many of the tubewells are useless in practice, because the pumps used to draw water have broken down and have not been repaired or replaced. The *New Internationalist* in February 1975 claimed that up to 90,000 wells in India are idle, basing this on a UNICEF statement that 60% of pumps at their wells are not working. In fact, this may be a conservative estimate, since elsewhere UNICEF has said that only 20% of some thousands of hand-pumps are working efficiently.

Oxfam experience in India has been similar. In one part of south India, when 61 drinking water bores were inspected (TN 3), 20 were found with pumps in working order, 23 had pump breakdowns where relatively simple repairs were possible, and 18 pumps were beyond repair with the wells effectively abandoned. At another project (TN 12), when 44 pumps were inspected three years after their initial installation, 17 were still functioning.

In contrast to these problems in India with *deep well pumps*, in Bangladesh, UNICEF, working with the government, has achieved a far more impressive result. A survey of 2,400 villages made in 1975 showed that 83% of wells were operative, i.e. only 17% were out of action because of pump breakdowns. Although these are tubewells, often drilled to a considerable depth to secure a clean supply, water tables are generally near the surface and *low-lift, shallow well pumps* are used.

Reasons for the success of the pump/tubewell programme in Bangladesh seem to be the high motivation of the people towards this type of water supply, and the organisation of the maintenance service. The fact that people value their pumps and

wells more highly than in some other countries is indicated by the large number of private individuals who have invested in a private pump for their own household. This contrasts with the situation 20 years ago when people did not want wells near their homes "so as not to be troubled by any mess which might occur". Long-term experience of well water has apparently changed attitudes quite markedly, so that now, vigorous complaint is made if the public well is out of action.

Also, the government has organised an effective maintenance service, and UNICEF has provided this service with a free supply of spare parts. Another factor is that maintenance of the shallow well pumps used in Bangladesh presents fewer problems than does maintenance of deep well pumps, because the parts requiring attention are more accessible. Because the most intractable problems occur with *deep well pumps, it is with these that this paper is principally concerned* – though much of what is said will be applicable to shallow well pumps also. (*Deep* wells are designated as wells in which the water table is more than 8m below the surface).

2. Approaches to the problem

The conventional way of looking at this problem is to assume that what we need is a new design of hand-pump, which will be more robust and reliable than the ones which break down on such a spectacular scale. Several organisations have therefore put a lot of effort into the redesign of conventional pumps, notably UNICEF, WHO, the AFARM agencies in Maharashtra (MAH 4, MAH 31) and the Battelle Columbus Laboratory (commissioned by USAID and later by UNICEF). The aim of most of this work has been to produce a pump which will work with minimum maintenance in the harsh conditions of Africa and India, where heat, dust, poor lubrication and poor materials inevitably add to the problem.

There have undoubtedly been benefits from this work, but one must beg leave to doubt whether the key problems have yet been faced or tackled. It is one of the great illusions in the appropriate technology movement that seemingly technological problems can be solved purely by attention to hardware. In this instance, the problem has at least five dimensions:

a) the communities using the wells and pumps
b) the agencies administering well programmes
c) the objectives for which the wells were provided
d) the type of pump used
e) the environment – climate, hydrology and geology

3. The communities using the wells

One comes across some very depressing statements about the communities using wells. We are told that there is often "a lack of community spirit towards water supplies, even to the extent of vandalism". Some villages are said to show "little concern for putting the pumps in order – they will not even oil the moving parts". And it is observed that privately-owned pumps which are used only by the owner's family are usually well maintained, even in villages where the public pump is

neglected. So it is very obvious that the problem of getting communities to work together and take collective responsibility for their wells in not being effectively tackled.

In some villages, when the pump breaks down, the people may remove it from the well. In Tanzania, this happens because the people can then let buckets down into the wide, hand-dug wells. In India, where a pump has broken at a borehole, it has been known for people to hand-dig a new well alongside it, so that they can get at the water without being dependent on the pump.

On the other hand, some villages do take great pains to look after their pumps. This is true in much of Bangladesh, and in one south Indian village a wire cable transmission system on the pump was a constant source of trouble, so villagers very ingeniously replaced it with a length of bicycle chain.

If one village can do this, why not others? The answers seem to fall into two categories:

I. *People may not have come to appreciate the benefits of using well water;* their experience of it may be short, and there may have been no effective health education on its value. There may also be real disadvantages, as when the well is too far from people's homes; when it is on Hindu upper caste land in India when intended for Harijan people; when the water is insufficient in quantity (i.e. there is excessive draw-down in the well); and when the water is brackish to taste. These subjects are often not investigated sufficiently before a pump is installed, and the views of villagers are often not sought.

II. *The people may not feel that the pump is theirs,* because of their lack of involvement in its installation, and because no specific responsibilities for its maintenance have been defined. The *New Internationalist* (February 1975) commented: "The villager often does not know how the drilling rig and pump work, where they have come from, why they have come to this particular village, what advantages they offer. He has not contributed anything in the planning, money, labour or time". Therefore he feels that the well and its pump do not belong to the village; he does not feel responsible for them, and he is perhaps uncertain whether he should try and tinker with the pump if it goes wrong. This may be unfair to most projects, but it contains an element of truth about many.

4. The agencies administering well projects

One reason why agencies have been slow to recognise the difficulties mentioned in the previous paragraph has been that *construction* and *maintenance* of wells have been thought of as quite separate operations, to be carried out by different agencies. Construction is often in the hands of a specialised well-drilling team, employed by a government, or sometimes a voluntary agency. But completed wells are usually handed over to a local authority for maintenance (e.g. in India, to a Panchyat Union). This division of responsibility means that well drillers can remain blissfully

unaware of the ways in which the construction phase of the work can permanently influence villagers' attitudes to the completed well with its pump.

The situation arises because the agencies which drill wells have had to put great effort into running sophisticated drilling machines in difficult conditions, and this has often had to be done as part of a crash programme during drought conditions. It is very understandable, then, that community development, follow-up, and maintenance planning have all been neglected.

The local authorities which take over responsibility for pump maintenance are sometimes conscientious, but more often fall down on the job. It often takes three months before an effort is made to repair a broken pump. Private technicians sometimes take advantage of the delay to repair pumps for exorbitant charges. The particular ways in which local authorities are most deficient in their organisation of pump maintenance are apparently as follows:

a) The idea of maintenance as a means of *preventing* breakdowns is lacking. Administrators confuse "maintenance" with "repair".

b) Records of how often each pump is visited by a technician and what is done to it each time are rarely kept, so there is little chance that maintenance will be regular or that faulty pumps which need replacing will be identified.

c) Pumps are not standardised and it is difficult to keep adequate stocks of spare parts for all the types used.

d) Skilled manpower is short and transport costs for technicians visiting pumps are high. The available budget is often too small.

5. The objectives of well projects

It is evident that the use of drilling rigs has been a factor in limiting the participation of local people in well projects, and in distracting agencies away from longer term problems. But of course, drilling rigs offer vital advantages in terms of speed of working and the depth to which wells can be sunk – and they can, if the effort is made, be fitted into community development programmes.

If, to keep people alive in a drought situation, it is necessary for a water supply to be created as rapidly as possible, then one is justified in taking short cuts which neglect long-term considerations. But one must be clear that such wells are a form of humanitarian or emergency relief – they are to be classified as "welfare" and not "development", and one must not be surprised if few long-term benefits emerge.

6. The type of pump used

The choice of a pump for a well or borehole itself depends on whether the objective of the project is welfare or development, as will be shown below. However, an even more basic consideration is to avoid pumps which are obviously defective in design and construction. Many of the problems which have arisen with well projects in south Asian countries are due to the very poor quality of some of the pumps

manufactured there. In India especially, reputable manufacturers do exist whose products can be relied on, notably the more prominent of those listed in the appendix. But many pumps in south Asia suffer from some or all of the following defects:

(a) poor quality cast iron (very widespread, often due to high phosphorus content).
(b) roughly finished cylinders; cylinder bore uneven.
(c) use of cast iron for cylinders instead of brass (brass is more expensive, but can be given a much better finish; to use cast iron is a false economy).
(d) no protection from rust; parts often badly corroded before the pumps are even installed.
(e) excessive wear on leather washers because of (b), (c) and (d).
(f) poor screw threads; nuts and bolts will not stay together.
(g) roughly drilled pivot holes.
(h) no provision for lubrication.

On top of all these difficulties, the size of pump components is not standardised to a sufficient degree of accuracy, so when a pump needs a spare part, there is no guarantee that the new part will fit – indeed, nuts and bolts sometimes arrive with incompatible threads.

Obviously, one form of appropriate technology development which is urgently needed is a programme which would upgrade the quality of work done by small, manufacturers of pumps. There is an obvious need for better foundry practice, and also for training in better machine shop practice, including the use of jigs and fixtures which will make it possible to produce interchangeable parts.

7. Hydrogeological considerations

The hand-pump problem has become widespread and notorious partly because so many rural drinking water schemes depend on wells or boreholes, even when alternative forms of water supply are possible. Again one needs to be clear on the welfare/development issue. Where long-term development is intended, the solution of water supply problems will often require the conservation and use of surface water resources – in all areas, even in semi-desert without permanent streams, there is some surface water at some seasons of the year. But to create a good drinking water supply from such sources is often a more time-consuming and difficult matter than the routine sinking of a well, so the latter course may be best for an emergency or welfare project – even when over-exploitation of groundwater and lack of conservation measures give the well a predictably short life.

On the more immediately practical level, a well and its pump are sometimes neglected because they are sited in a very inconvenient place. In areas where geological surveys are incomplete, hydrogeologists are so often wrong that their views should not be given undue importance. Unless it seems quite wrong from a geological point of view, the first attempt to make a well and find water should be at a point

where villagers want it. In India, wells for Harijan people should always be on Harijan land.

A final point related to hydrogeology is that people will inevitably and quite logically neglect pumps if the wells they draw from are unsatisfactory, either because the water tastes bad, or because there is not enough water. Bores which seem unpromising from either point of view should be capped, with no pump installed.

In particular, the sufficiency of supply should be checked by means of a pumping test. A hand-pump, not a motorised pump, should be used for this, because if sufficient water is available, but only with large draw-down, hand-pump performance may fall off so much that villagers give up using it. Tests with a motorised pump could disguise this entirely. Part of the pumping test should be a check on hand-pump performance at various draw-down levels. This should help in deciding the best depth for the pump cylinder in the final installation – it should usually be located below the draw-down water level. If the pumping test is done during the rainy season when the water table is high, allowance must be made for the reduced water level to be expected in the dry season.

Part Two: Strategies

8. Three Packages

"An effective pump system is not simply a technological object but a conglomerate of technology, institutions and people – individuals who must plan, design, manufacture, finance, purchase, install, operate, maintain, oversee and use the pump. This often neglected concept is an important reason why as many as 40 to 80 percent of hand-pumps are inoperative within 3 years of their installation."

This comment by F. E. McJunkin in WHO's draft guideline on hand pumps puts in a nutshell the principle on which any strategy for tackling the pump problem must be based. But it is the weakness of most Western experts that their outlook on technology is one which isolates 'hardware' from this conglomerate of other activities. Thus the stock response to a technical problem such as persistent pump breakdowns is to look for solutions which have to do only with such items of hardware as the pump's structure and mechanism. The result is that there has been a great deal of emphasis on the redesign of pumps. Because so many very bad pumps are in use, quite a lot has been achieved by improved design and better construction, and this has strengthened the illusion that a total solution can be found by concentrating on the hardware.

But the redesign of pumps can only go part of the way towards a solution, because, as we have seen, so much else in the human and social dimension contributes to the failure of hand-pumps. One way of understanding this wide range of factors is by studying them as a "systems problem," in which the pump hardware is

seen as only one component in the total system. "A hand pump is a small technological instrument in a large social system", the WHO guideline comments. Other components are the organisations which construct and maintain wells, the people who use wells, and the communities to which they belong. It is, of course, true that all applications of technology involve people, and therefore involve systems which have social components, and it is common experience in Oxfam projects to find that the *social components of technological systems* are more significant, or more difficult to cope with, than the hardware components.

Because the hand pump problem was seen as not just a matter of the pump, but also of the system to which the pump belongs, the problem was discussed with the System Department of Lancaster University, two members of which visited Oxfam House during the summer of 1975. Systems theory has not often been explicitly applied in the field of rural development, but rural development workers do have in their own jargon a number of words which betray the influence of systems concepts. One of these is the word "package", and it may be more acceptable in the present context to use that. So instead of saying that we wish to investigate *systems* which will achieve the satisfactory functioning of village wells and pumps, we can equally and alternatively say that we wish to look at various *packages* of measures which will improve the performance of well/pump projects.

The remainder of this report will examine three possible "systems" or "packages" which offer different solutions to the problem of chronic pump breakdowns. The three packages are distinguished from one another mainly by different degrees of involvement of local people and communities, and are as follows.

a) Total village self-reliance in the manufacture and maintenance of pumps.

b) Partial self-reliance, with factory-made pumps, but with villagers at least partly responsible for maintenance. Typical pumps suitable for use in this package are shown in figure 1.

c) Elimination of all village responsibility, the pump being provided and maintained without participation by the villagers who use it. Pumps designed for this package are shown in figures 2 and 3.

9. Package for total village self-reliance

Some people have argued that if a pump could be designed capable of being made by a village craftsman using simple tools and local materials, then the maker of the pump would always be on hand to repair it when necessary and the village would be entirely self-sufficient in its pump requirements.

This argument has considerable validity for low-lift pumps, and particularly for irrigation pumps, because in many parts of India, China and south-east Asia, there are traditional designs for such pumps which have been built by village craftsmen from time immemorial. Persian wheels in India and the dragon-spine pumps in countless Chinese rice-fields are obvious examples. Many people have attempted to

extend this approach by using widely available modern materials such as PVC piping. Most published accounts of such experiments, though, refer only to the pump design, and little is said about the social, cultural and technical tradition to which the proposed pump is to be grafted. One of very few cases known to the author where these broader cultural aspects have been seriously considered is with a pump designed and built in a local Ethiopian context by a British technical adviser (ETH 11), with the intention of training villagers to build further pumps of the same kind.

Where a new pump such as this is incorporated into an indigenous technical tradition, it becomes an appropriate technology in a far truer sense than when a Western product is effectively imposed upon a community, whose members can then only construct and maintain it when they have been given a Westernised technical training which disregards local skills. However, the majority of well projects do in fact use factory-made pumps of Western-inspired design, and so it is with the use of these that this report has to be mainly concerned.

There is also the point that where village-made pumps have been successful, it is usually with low-lift applications. In deeper wells, high water pressures make leaky valves less acceptable; forces on pump rods and handle pivots are greater; and much of the pump is too inaccessible within the well or borehole for regular tinkering and adjustment. Anybody with a deep hand-dug well who cannot afford or cannot maintain a factory-made pump is generally better advised to resort to a bucket and rope, with a simple windlass for raising and lowering. All possible precautions, though, should be taken to prevent the bucket from transferring polluting material from the ground surface to the water in the well – e.g., the bucket should not be placed on the ground, nor carried from the well to people's homes.

Another reason why pumps capable of being constructed within villages have not caught on is that most of the designs proposed have more in common with the Western do-it-yourself approach than with the style of work done by real village craftsmen. There is a gap between cultures in concept and in detail – e.g. in the use of screws, the way joints are made, and so on.

Except for certain low-lift pumps which can be successfully made in the village, one must therefore think of pump manufacture in terms of adequately equipped workshops capable of turning out pumps built of durable materials, with the high standards of finish (e.g. machining of cylinders) required for reliable operation. Workshops with this capability can be successful on a relatively small scale, but rank as small industries rather than localised village trades, often serving countries, districts or whole states. The problem of pump maintenance is therefore a problem partly about manufacturing pumps made by local factory methods and to factory standards.

The local production of pumps may vary from the work of a general workshop making agricultural implements which occasionally turns out a pump, to small but specialised workshops capable of turning out 200 or more pumps per year. The latter are likely to be more effective in the long run than the former, but a good example of a general workshop turning out pumps occasionally is to be found at the Family Farms project in Zambia (ZAM 17). Several of the more specialist type of workshop are to be found in India (MAH 31, TN 3), and as an example of what equipment is required for pump manufacture on this scale, it is worth quoting the

workshop at Jalna (MAH 4). In 1970, this employed nine men to make 200 pumps. The major items of equipment used were as follows:

3 lathes
2 arc welding units
1 gas cutting and welding set
2 drills
small-scale foundry and moulding equipment

With cast-iron pumps of more traditional design, welding facilities would not be needed, but a larger and more complete foundry would be required.

10. Package for partial self-reliance with factory-made pumps

The simpler types of factory-made borehole pump can be fairly easily maintained by people with relatively few skills, so the possibility arises of villages being substantially self-reliant with respect to the maintenance of their pumps. But all pumps of this kind require some attention, particularly with regard to greasing or oiling moving parts and countering dirt and rust.

So any package which includes such pumps must also include a considerable community development effort aimed at impressing upon the villagers the need for regular pump maintenance, establishing responsibilities for this work, and giving some training in the care of the well and its pump. If adequately carried out, such a programme would stimulate more frequent oiling, cleaning and adjustment of other mechanical equipment in the village – implements, ox-carts, mills or bicycles. Although regular basic maintenance can be carried out by villagers in this way, the package must also include some form of back-up service which would supply spare parts and make technicians available for a regular inspection of all pumps in the area.

Deep well pumps suitable for programmes of this kind include the Craelius pump made in Kenya; the Wasp, Kirti and Kaveri pumps made in India, and the Dempster model 23F made in the United States (see figure 1). The three pumps of Indian make have been widely used in the country, while in Africa, Dempster and Craelius pumps have often been adopted. UNICEF and Oxfam projects in East Africa have used the Craelius pumps; UNICEF has also used the Dempster type and so have SATA projects in Cameroon – though Oxfam bought Godwin pumps for one small well project with which SATA helped (CAM 12).

The Craelius is the most distinctive of these pumps; it has an arrangement of pipes sliding over each other to carry out the same function as the rather complex guide rods on the Wasp, and on the almost identical Kirti (not illustrated). The Craelius system offers some advantages in terms of simplified maintenance, and Craelius pumps have a long record of reliable service in East Africa. Unfortunately, though, they are two or three times as expensive as the Dempster. The relative simplicity of the Dempster (and the very similar Kaveri) as compared with the other pumps is due to its lack of guide rods above the top end. Experiments have

shown that these guide rods offer an advantage mainly in very deep wells where better control of the pump rods leads to reduced wear on all bearing surfaces, and particularly on the leather washers. The guide rod system on the Wasp is also adjustable so that the leverage can be set for pumping water from greater depths without excessive effort.

So although the Wasp and Craelius pumps have advantages for deep wells, in most projects, where water has to be raised 20 metres or less, pumps of the Dempster/Kaveri types are an adequate and economical choice. In reseach commissioned by USAID, Battelle Columbus Laboratories designed an improved version of this type, which is easier to maintain by virtue of having fewer components and needing fewer tools for maintenance. It is also less vulnerable to damage, being of heavier and more rugged construction, and having more protection against rust. But efforts to arrange field tests for this pump in Thailand, Nigeria and Bangladesh have been disappointing, mostly for non-technical reasons, and the design is still not proven. In Bangladesh, UNICEF helped in developing a local pump called the "New No.6", which incorporates some ideas suggested by the Battelle work, but which is about half the size, because of a need to economise in materials. It is currently being manufactured in tens of thousands in local foundries (It is a low-lift pump).

The pumps described in this section may be regarded as almost the norm for Oxfam projects, so it is important that the social component of this level of technology be fully understood. Appropriate forms of participation by the local community and suitable technical back-up arrangements are discussed at length in section 13 below.

11. Packages involving elimination of village-level responsibility

Several decades ago, certain pumps were designed in Britain for use in "the Colonies", particularly for regions where normal maintenance could not be guaranteed. Almost all of these were heavily built machines in which a handle attached to a large fly-wheel had to be turned in order to work the pump. This fly-wheel drove a normal pump mechanism by means of a small crank-shaft. The great advantage of this design was that all bearings and other mechanical parts could be totally enclosed, protected from dirt and other interference, and self-lubricating bearings could be arranged. Such pumps have successfully worked for long periods without maintenance Many are still in use, though few are now being installed because of their high initial cost.

A more modern type of pump which can also operate for long periods without maintenance is the hand-driven Monolift pump. This works on a different principle from all the pumps discussed so far; it has a helical or screw-type metal rotor turning inside a fixed sleeve within the well shaft. To operate it, one turns a crank handle at the well-head (figure 2). Gearing from the crank handle drives a vertical axle inside the well, and so turns the rotor – but this gearing is very simple, and is again totally enclosed and self-lubricating.

Like the fly-wheel drive pump, the Mono pump is relatively very expensive. How-

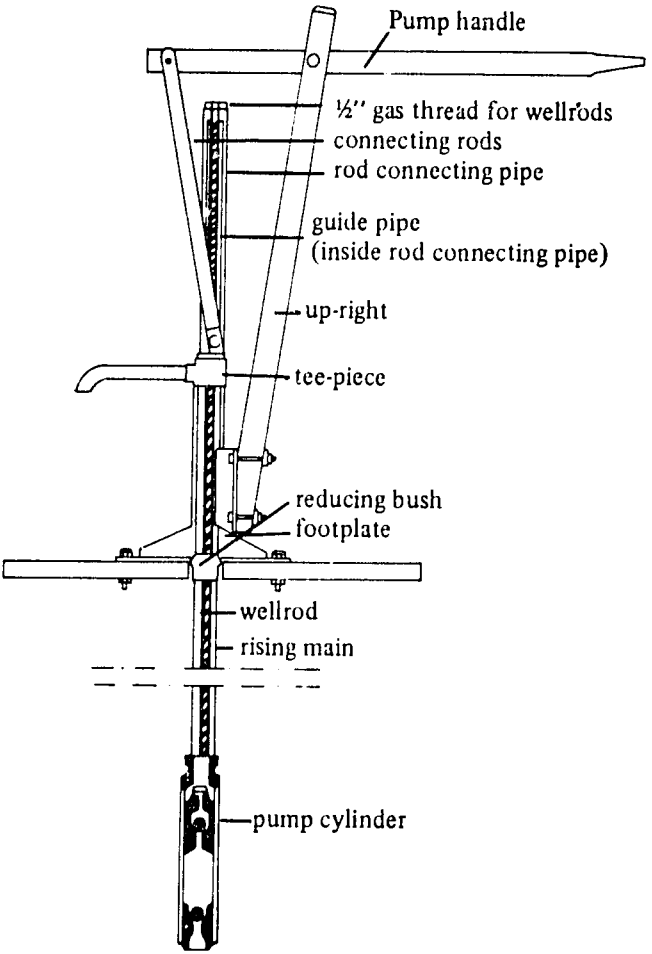

The Craelius pump made in Kenya; model for hand-dug wells.

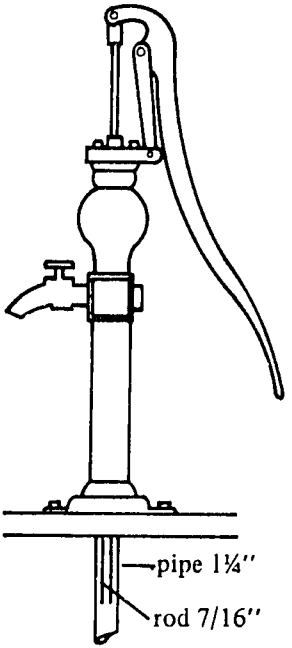

The Dempster model 23F.

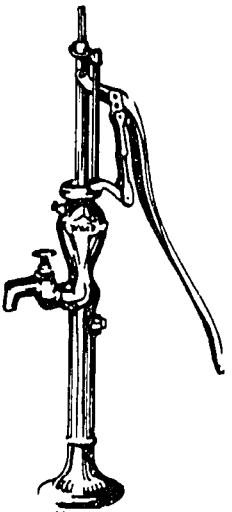

The Wasp deep-well pump, made by Water Supply Specialists, Bombay.

Figure 1:
Pumps appropriate for the "partial self-reliance" package.

RIVERS STATE
RURAL WATER SUPPLY SCHEME

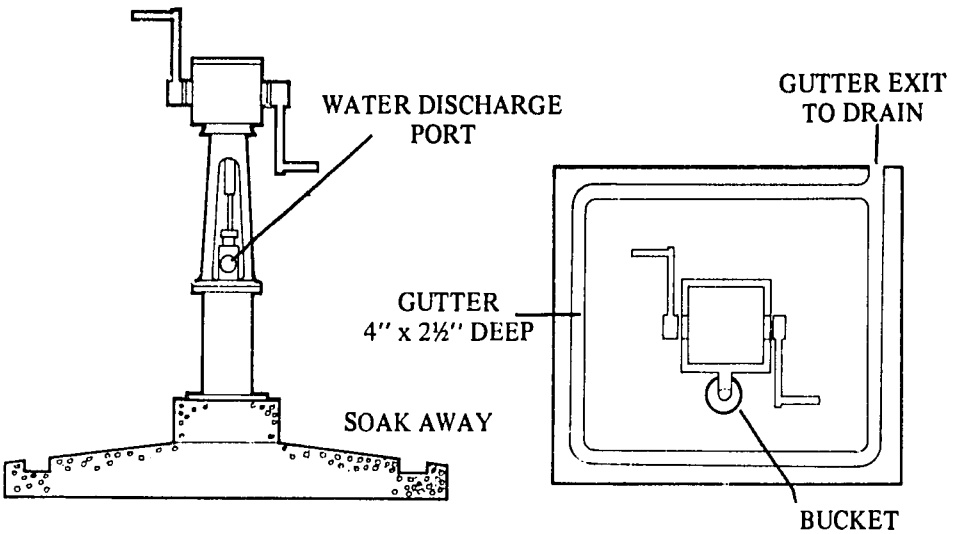

SIDE ELEVATION PLAN

Figure 2: Mono-lift pump in Nigeria – detail of top end, (by permission of MONO PUMPS ENG. LTD).

Below: Instructions aimed at users

IMPORTANT

1. IT IS THE DUTY OF THE VILLAGE/TOWN PLANNING COMMITTEE TO ENSURE THAT ALL PEOPLE KNOW HOW TO USE THE PUMP CORRECTLY.
2. DO NOT TRY TO FORCE OR JERK THE HANDLES ROUND OR APPLY ANY MECHANICAL MEANS IF STIFFNESS IS ENCOUNTERED REMEMBER THIS IS A HAND OPERATED PUMP.
3. A SLOW EASY ROTARY MOVEMENT IS REQUIRED TO OPERATE THE PUMP – CONSTANT USE WILL RELIEVE ANY STIFFNESS.
4. DO NOT LET CHILDREN PLAY WITH THE PUMP – IT IS NOT A TOY.
5. REMEMBER THIS PUMP IS YOUR GATEWAY TO A BETTER HEALTHIER LIFE. IT'S WORKING LIFE WILL BE DETERMINED BY THE WAY YOU LOOK AFTER IT.

Jalna-type pump

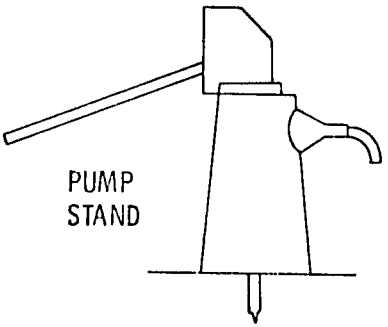

TOP END MECHANISM 1972

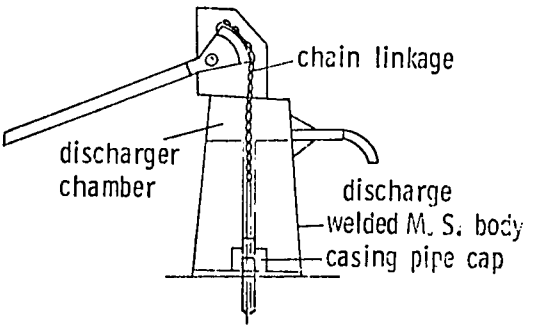

STANDARD DESIGN 1974

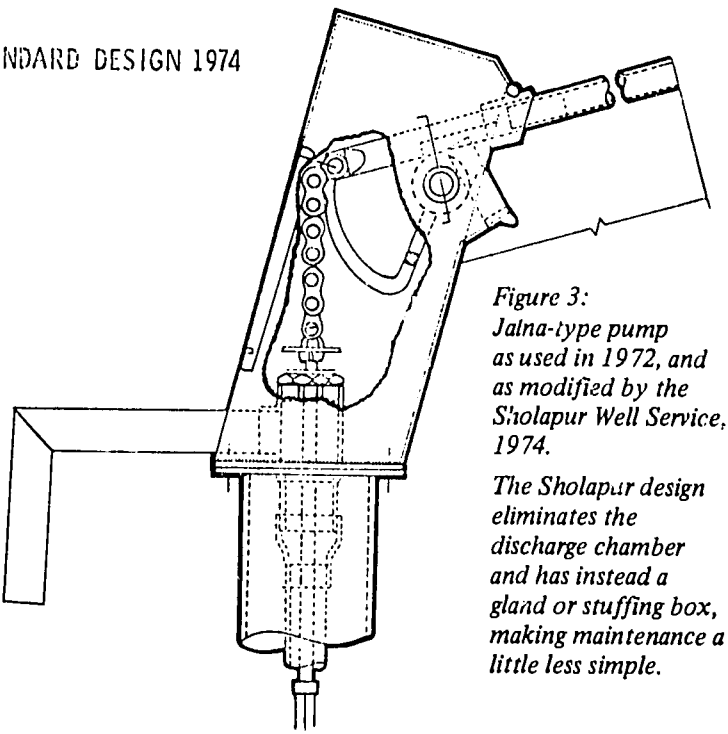

Figure 3:
Jalna-type pump as used in 1972, and as modified by the Sholapur Well Service, 1974.

The Sholapur design eliminates the discharge chamber and has instead a gland or stuffing box, making maintenance a little less simple.

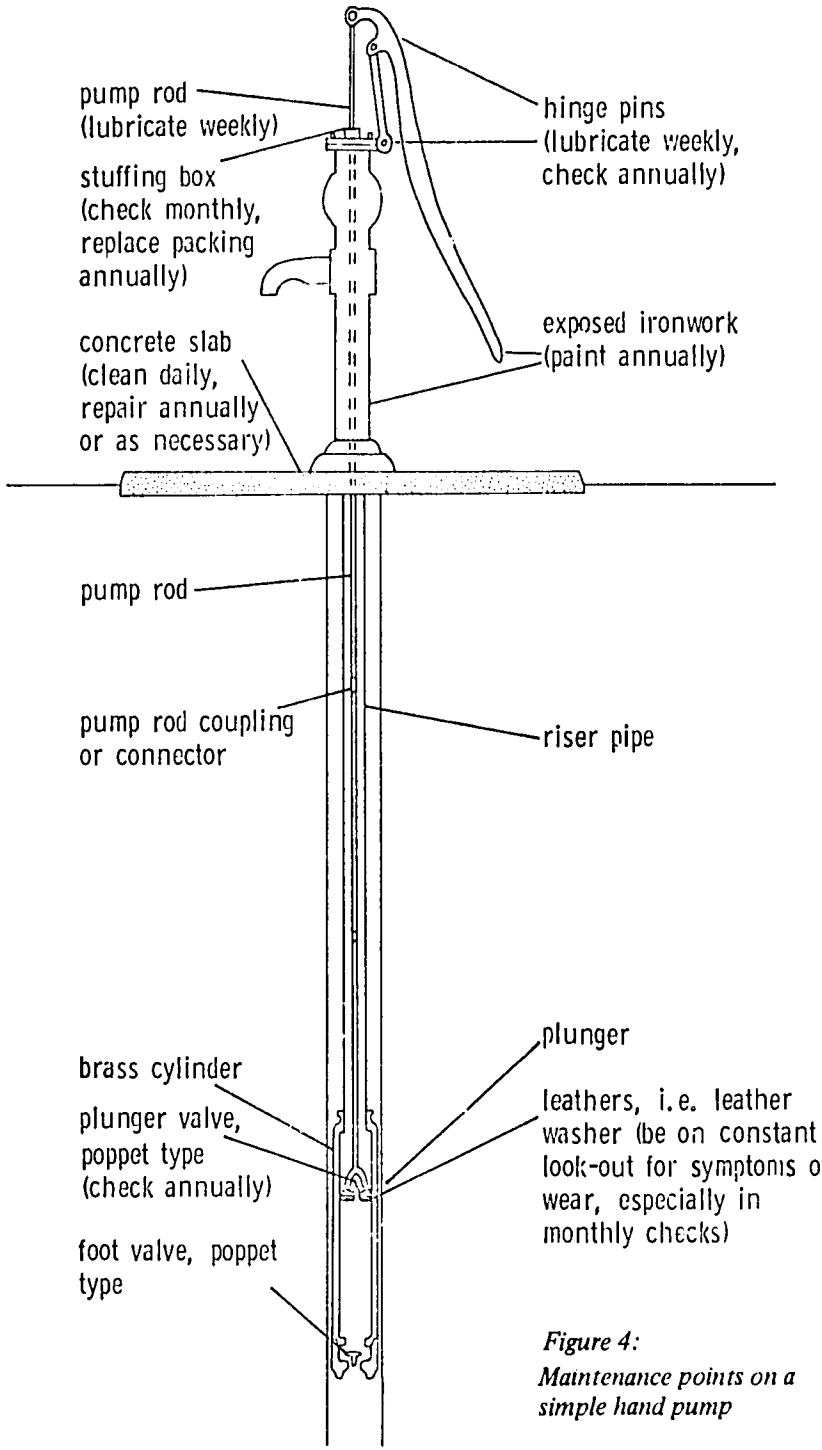

Figure 4:
Maintenance points on a simple hand pump

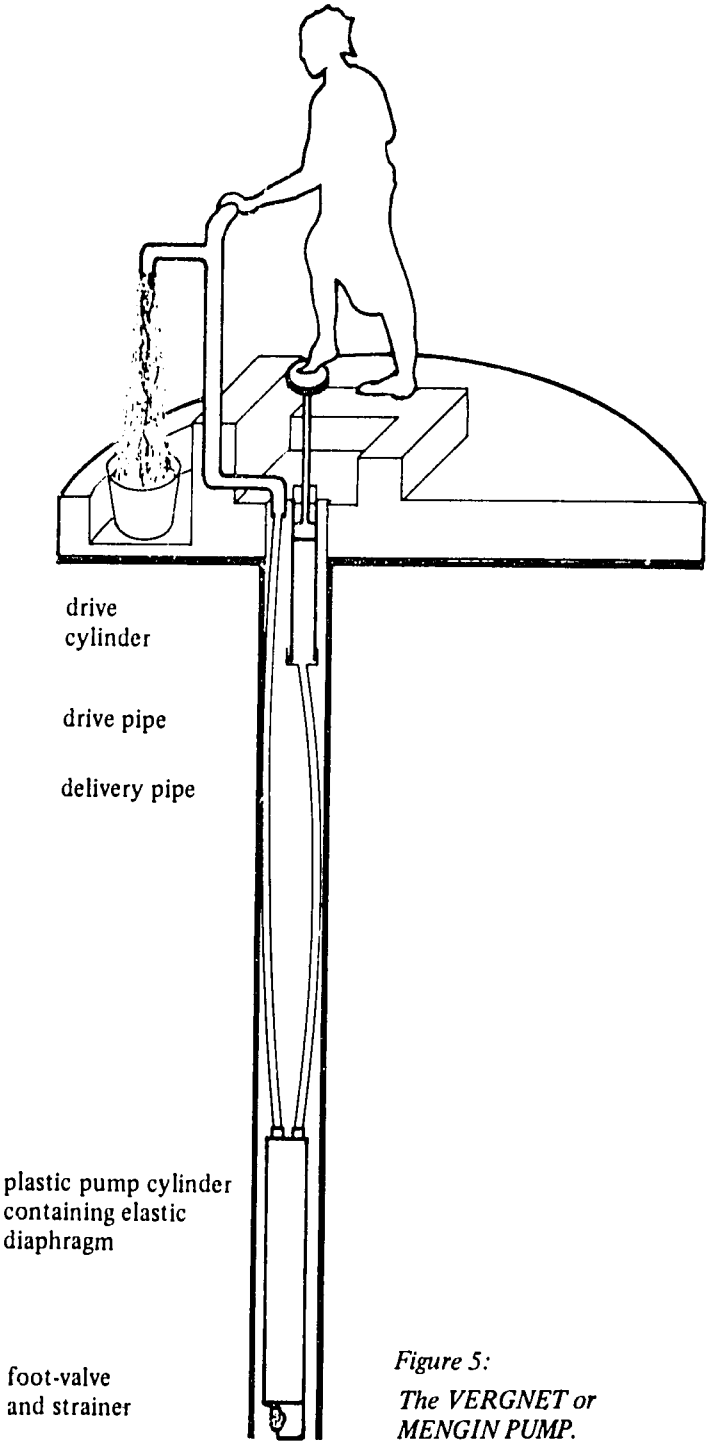

Figure 5:

The VERGNET or MENGIN PUMP.

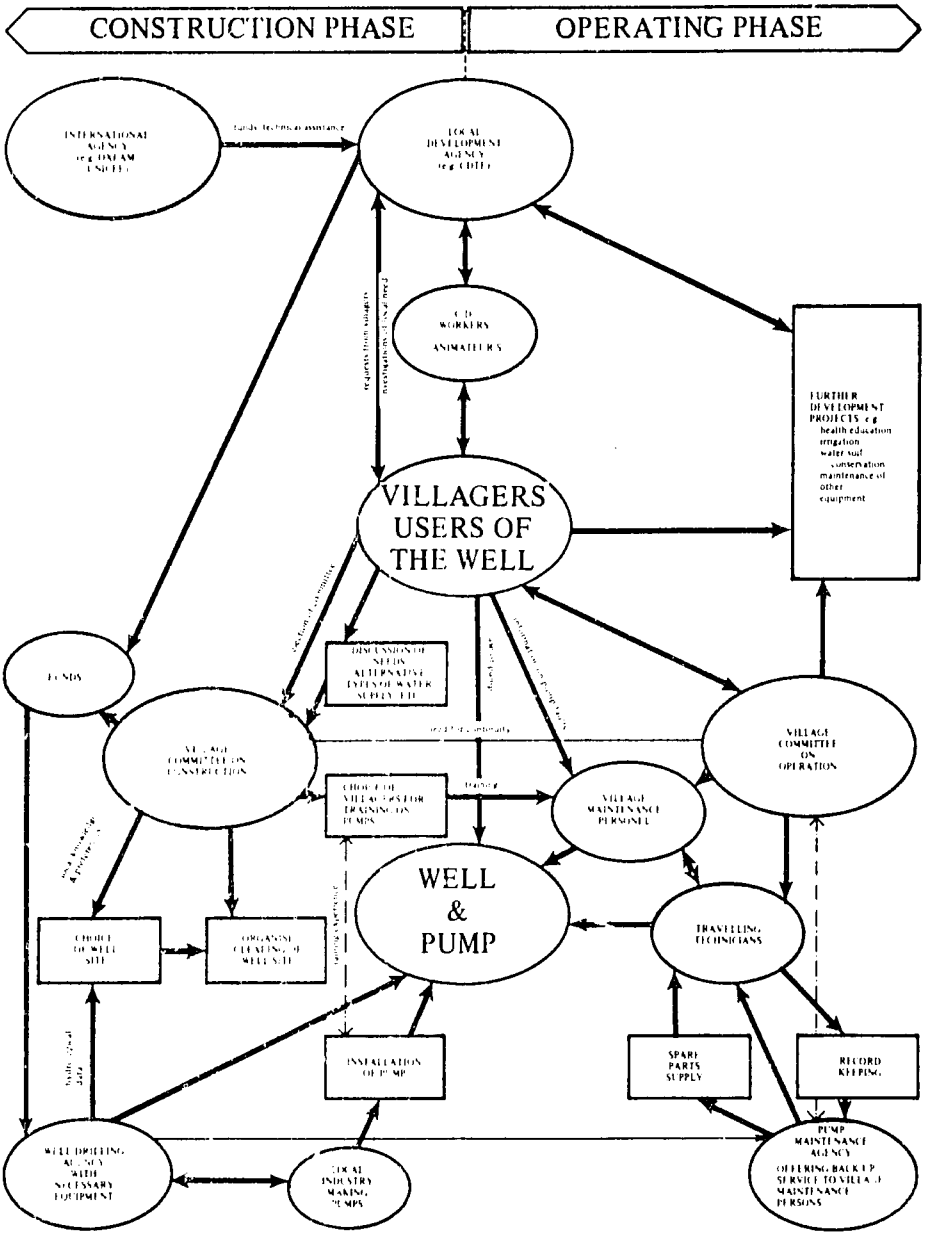

Figure 6: Combined systems map of the package which aims for partial self-reliance.
(Two overlapping systems maps are shown, illustrating the system during construction merging with the system in operation after completion of the well).

ever, in Malawi, where both types are used on government boreholes, it is felt that the very low maintenance costs of the Mono, in particular, fully justify its high capital costs.

UNICEF also is supplying hand-driven Mono pumps to parts of Africa, e.g. Sudan, in conjunction with Oxfam project SUD 12. However, the most widespread use of these pumps has been in Nigeria, where more than 1200 are now installed. The Rivers State has issued a special booklet about the pump for villagers. The accompanying diagram (figure 2) is from the booklet. It shows the two crank handles at the head of the pump, and also illustrates that even a pump which is nearly maintenance-free does impose some responsibilities on the local community. The Rivers State authorities tested other pumps but found that without exception, the Monolift hand-pump was the only unit which stood up to the arduous duties called for in remote villages where little maintenance was possible. Similarly, the UNICEF New Delhi office believes that the Mono pump is one of very few types which could stand up to Indian village conditions without maintenance for any length of time, and given unlimited funds, it would probably be the type of pump they would choose.

It is difficult to quote precise costs for fly-wheel drive and Mono pumps, not only because there is considerably variation from one country to another in the present inflationary climate, but also because the cost of the pump after installation depends so much on the depth of the well and the remoteness of its location. However, it was earlier said that the Craelius pump was two or three times as much as the simplest type of deep-well hand-pump. We can now add that the cheapest fly-wheel drive pump costs about twice as much as the Craelius pump after installation, and Mono pumps are somewhat more expensive still. So the two types which circumvent so many of the maintenance problems, and which eliminate most village-level responsibility, may cost six or eight or even ten times as much as the simplest pumps available to do the job.

In India, neither of these rather costly pumps has been much used. Instead, efforts to create a pump with similar low maintenance needs have resulted in the Jalna or Sholapur type. This is a conventional borehole pump with lever arm handle, but it uses a length of motor-cycle chain to connect the pump rod to the handle. This means that there is need for only one bearing, and roller bearings in an oil bath were provided for this in some instances. The rest of the mechanism is sufficiently compact for it to be totally enclosed, again avoiding problems with dirt. In the design of this pump, effort was concentrated on the head-gear because it was found that 80% of pump breakdowns in India were dependent on this. It is claimed that Jalna-type pumps will function satisfactorily for up to two years without any maintenance, though Oxfam's experience with these pumps has not served to justify such claims.

This pump was developed at the former Church of Scotland Mission at Jalna in Maharashtra during the late 1960s (MAH 4). It was later taken up by other Maharashtra agencies, most notably by the Sholapur Well Service (MAH 31). Sholapur improved the design somewhat (figure 3) and took out a patent which they use to prevent sub-standard pumps being made by other firms or agencies. The Jalna or Sholapur type of pump is now being manufactured by two organisations in Tamil

Nadu as well as in Maharashtra – these are SENCO Industries and Coimbatore Water and Agricultural Development Project (TN 3). In addition, UNICEF has adopted it as standard for their pump and well projects in India.

Reports on the reliability of Jalna or Sholapur pumps are very mixed. In one trial of these pumps outside Maharashtra, they gave so much trouble that they were soon replaced by simpler pumps (comparable with the Dempster type in figure 1). So efforts to improve on the Jalna/Sholapur type continue, and the more recent work, supported by UNICEF, WHO and the Karnataka government, has led to the development of the Bangalore pump. This uses a roller-chain to link the handle to the pump mechanism, like the Jalna type. However the body of the pump is made of cast iron, not welded steel, and a steel wire rope of 6 mm diameter replaces the pump rod used in all conventional pumps. This wire substitute for the usual rigid rod allows use of a smaller diameter riser pipe, and this secures considerable economies in the weight of materials used. The pump cylinder is of conventional design but uses unconventional materials, including neoprene cup seals instead of "leathers" and nylon balls in the ball valves.

In January 1976, the Bangalore pump had not passed much beyond prototype stage, so it is not possible to say much about its performance; it does, however, look like being considerably cheaper than the Jalna or Sholapur type. Since then, yet another design in this 'family' has been produced – the India pump.

Jalna, Mono and fly-wheel drive pumps are all designed to make minimal demands on the communities they serve, and place few responsibilities on villagers. They work successfully for long periods without maintenance, and as UNICEF points out, if a pump requires maintenance only once a year, a well-equiped maintenance team becomes possible which can offer a much better service than a lone fitter coming round once a month, which is what many other pumps seem to require. So as a means of providing rural communities with water, these are very good pumps; and with its basis of localised, small-scale manufacture, the Jalna pump in particular is an immense success story.

But as catalysts for development, encouraging villagers to take charge of the technical component of their own future development, these pumps contribute little – they leave the villagers purely as clients of the local authority, or of the water resource agency which carries out the annual servicing. On these grounds, one Oxfam project holder in south India has become very critical of the Jalna/Sholapur pump and the philosophy which has caused UNICEF to adopt it. He feels that the low maintenance concept is an illusion, and that it would be better to use a simpler pump and squarely face up to the social-cum-organisational problems of effective maintenance. To concentrate attention on the ideal of a maintenance-free pump is to evade these social issues.

12. Changing philosophies

India and Bangladesh have witnessed more concentrated effort on hand-pumps and maintenance systems than any other part of the world (though there has also been considerable work in Francophone West Africa – see Section 15). It is significant

that in both countries, not only have improved types of hand-pump been produced, but much thought has been given to matters of organisation. At a more philosophical level, there has also been some re-definition of the objectives of projects. It is therefore worth looking at the changes in both philosophy and technology which have taken place.

In India, a greatly improved version of the Jalna type of pump, known as the India Mark II, went into regular production in Madras at the end of 1976. Two years later, 20,000 of these hand-pumps had been made, and a large proportion of them had been installed in the Indian state of Tamil Nadu. Many were installed at new boreholes, but a larger number were used in a "hand-pump rejuvenation" scheme to replace older types of pump at existing wells. Over large areas, therefore, the India Mark II is now the only type of deep-well hand-pump in use, so that maintenance can be based on a standardised set of parts.

The new pump has a steel body, and like the Jalna and Sholapur pumps (figure 3) it uses a roller chain as the connection between the handle and the pump rods. Its cost in early 1977 was US$100, though this would be increased to approximately US$200 at the time of installation with the additional cost of 50 metres of riser pipe.

It is tempting to regard this purely as a technological development, but what has been achieved with the India Mark II arises as much from a better appreciation of the objectives of community well projects as from the development of a new technology. In the late 1960s, when many of the large well-drilling projects had been started, serious and chronic drought affected many regions, not only devastating agriculture, but making it increasingly difficult for villagers to obtain the small quantities of water needed for drinking. Even in normal times, one-sixth of Indian villages were located more than 1.5 kilometres from their principal water source. During the drought, after all surface water and many shallow wells had dried up, the number of villages in this category, and the distances involved, steadily increased.

In such a situation, the main objective of drilling boreholes and installing pumps would be to provide water to people in desperate need of it. In the urgency of a drought, it is understandable that this simple technical objective was all that concerned the well-drillers, and any additional aims, such as health education, were forgotten.

However Oxfam has come to see water supply projects, along with others involving house-building, sanitation and other community-based activities, as being potential catalysts for social development. Such projects encourage people within communities to work together in new ways, and to understand how much they can achieve with simple modern technologies using their own labour and skill. They are thus able to manage their own development more effectively than before. In this way, water supply projects can become a very effective means of *social education* or *community development*.

But while this is the ideal, many of the large well-drilling schemes have been its opposite. Big drilling machines have been used in conjunction with a package of measures by which village level responsibility is all but eliminated. Pumps chosen, or regarded as ideal, have been those which make the least demands on the local community and which are often very expensive.

One point to note here is the *relationship* between the objectives of projects

and the technological package chosen. If the objective is simply to provide water, then the most efficient way may often be to forget about self-help involving villagers, and to choose a package that eliminates village-level responsibility. This is likely to involve the use of big drilling machines and pumps which require little maintenance.

However, if the objective of the project is not only to provide water but also to make an educational or developmental impact, it is more logical to choose a package that leads to partial or complete self-reliance by the villagers. Oxfam's experience in India led its staff to believe that large well-drilling projects could rarely be compatible with longer term educational or development objectives. Oxfam has therefore withdrawn from most schemes of this kind. UNICEF, in contrast, while also appreciating the social dimension in development, has a more specific commitment to water supply programmes. However, UNICEF has been more persistent in improving the educational and organisational components of borehole projects, usually working in close collaboration with government agencies.

In Tamil Nadu, then, the outstanding feature of the programme for installing India Mark II pumps is not just the pump itself (though this is a first-class machine, suitable for other countries as well as for India) but rather the educational and training programmes and the new system of maintenance which are included in the package. This package is now sometimes referred to as the "Tamil Nadu model", though its official name is the "three-tier maintenance system".

A key feature of the three-tier system is the emphasis on village-level responsibility. In every village, there is one member of the community who acts as the hand-pump caretaker. Such people attend a two-day training course, are given an instruction booklet in the local language, and then undertake the following responsibilities:

a) to see that villagers operate the pump correctly;
b) to service the pump once a week;
c) to keep the area around the pump clean and free of refuse;
d) to ensure that spilt water drains away;
e) to report hand-pump breakdowns to the proper authority;
f) to explain to villagers that water from the pump is better for their health than water from other sources.

Some elementary health education comes into the caretaker's work because his activities are seen as complementing those of the community health worker – indeed, he is recruited and trained in much the same way. The maintenance tasks which fall to the caretaker are very basic – they mainly include simple servicing and keeping the pump and its surroundings clean. When problems arise, the caretaker can call on the other two tiers of the Tamil Nadu three tier system. For minor repairs he can contact a professional mechanic employed by the Government Water Supply and Drainage Board. However, more complex repair problems, particularly those that involve lifting pump cylinders out of wells, are referred to a district mobile team, comprising three men equipped with a pick-up van and a full complement of tools, lifting gear, and spare parts.

The three-tier system ensures more regular inspection and adjustment of pumps

so that breakdowns occur less frequently. However, the ability to deal with breakdowns has also been improved. In Tamil Nadu state there were 15,200 deep-well hand-pumps in 1977, and complaints of malfunctioning or breakdown were received at the rate of 660 per week. The vast majority of these complaints were dealt with by either the mechanics or the mobile teams in less than seven days, which ought to mean that no more than five per cent of pumps were ever out of order. Reports suggest that this is the case, at least in some areas.

The Tamil Nadu model represents one of many possible packages involving village-level responsibility for hand-pumps, with some partial degree of self-reliance. This type of package is very widely used, and in sections 13 and 14 it is discussed more fully, particularly with reference to its application in a wider range of countries.

13. Community development approach to well projects using factory-made pumps

Despite all the above qualification, Oxfam's philosophy is best represented by well/pump projects in which social education or community development is possible. In these cases, a *pump package involving some form of community participation* is desirable, and it is with this subject that the rest of the present booklet is concerned.

Ideally, community development related to the provision of a new water supply, be it a well, borehole or surface source, should begin long before any drilling or digging is started. Either through village meetings, or by formation of a committee, or by other types of discussion, the villagers should have taken the following steps:

1. They should have formulated a request for help in installing their new water supply.

2. They should have discussed what sort of supply they need, and where they would like the well or other water points located.

3. They should have discussed their own contributions, which should usually include some physical contribution as well as cash, e.g. clearing the site before the drilling rig comes.

4. They should have decided which members of the village should be deputed to take up any special responsibilities – who should collect the cash, who should organise the gangs, and who should be in charge of the pump when it is erected.

This approach is followed in UNICEF-assisted projects in Bangladesh as well as in some Oxfam piped water projects in Africa. However, UNICEF feel that their success in Bangladesh is due more to the gradual build-up of appreciation for improved water than to the details of this procedure. In much of India, community processes of this sort are particularly difficult to organise because of the way many villages are divided by caste; some projects are limited solely to Harijan, or lower caste groups within communities, and may not serve the community at large.

Whatever the difficulties, though, if these four steps can be carried through under village leadership, the drilling rigs and their crews are immediately placed in a less dominant position. They now wait for the villagers to request the well, and

then co-operate with them in siting it and in construction. In areas where hand-dug wells are feasible, the drilling rigs should perhaps be confined to drilling pilot bores for groundwater exploration. Then the most important contribution of the big machines would be to save people the all-too-common, heart-breaking experience of devoting weeks to digging a well and then finding no water. The work involved in digging is only an intolerable burden if it finally proves to be futile.

If a project is begun in this way and followed through in the same spirit with full participation by the villagers, many of the problems encountered in well/pump schemes will not crop up at all. If a wrecked pump on an existing borehole has to be replaced, the opportunity can be taken of introducing a degree of participation even at that stage, by forming a village committee to allocate responsibilities for the new pump, and to organise labour for cleaning up the well site.

Exactly how responsibilities for looking after pumps are allocated depends partly on the kind of back-up service which is available, and on the type of pump. It may be appropriate to ask villagers only to deal with the more basic maintenance tasks and those which have to be carried out most frequently. The back-up service would then need to provide a well-trained and well-equipped technician who could visit the pumps at regular intervals (e.g. every three months) to give them a thorough servicing. This system is commonly found in India, and an appropriate division of responsibilities between villagers and technicians is described below.

The alternative is to give certain villagers a thorough training in pump maintenance and leave virtually all responsibility in these villagers' hands. This approach is being tried in Tanzania, where: "Each village will be required to nominate a person *before* the well is sunk who will go to the District Office for two weeks to learn about shallow well construction and maintenance, particularly of the pump. He will then be responsible for the well once it is sunk, and will carry a small stock of leather washers and other spare parts in his house. If a major breakdown occurs he will go back to the District Water Office and either get the parts needed to do the repairs himself, or else get the District Water Engineer's fitters to do the job." (TAN 6).

In order to ensure that the villager responsible for maintaining the pump remains highly motivated, it may help to give him duties which add to his responsibility and status in the village. For example, if the pump is locked with a padlock and chain between certain hours, the maintenance man can be given charge of the key. This invests him with a certain status and at the same time imposes a degree of discipline in the use of the pump. If the maintenance man is involved in any expense, e.g. through taking a bus to pick up a spare part, he should be able to approach the village committee which organised the well scheme and arrange through them for the community to reimburse him.

Yet another community development activity which may motivate villagers to take full care of their pump and at the same time take proper advantage of its benefits is health education. This should stress the importance of hygiene, and in discussing the importance of clean water, should explain how to guard against pollution in the well.

14. Maintenance tasks for the simpler types of borehole pump

Before one can define in detail the parts of the pump package which have to do with maintenance one must know more about the vulnerability of pumps to breakdowns and other troubles. Experience in a variety of countries suggests that the following points need most attention:

The most common cause of pump breakdowns is usually said to be a failure in the top end – the hinge pins on which the handle pivots (figure 4), breakages of the handle, of nuts and bolts and other parts. Lack of lubrication and clumsy use (banging the handle against the stops) are the usual reasons for trouble. The Jalna Sholapur pumps and the fly-wheel drive types avoid most of these problems.

The second most common cause of pump breakdowns is wear of the leather washers in the cylinder – and in Thailand and some other countries, this is said to be more common than top-end failure. In deep-well pumps, it is also a more serious problem than faults in the top-end mechanism, because changing the pump leathers entails hauling pump rod, riser pipe and cylinder to the surface, and this is often beyond the capability of a technician working by himself, and even with villagers to provide extra labour, the necessary tools, lifting gear and skilled personnel may be lacking. The frequency with which leathers fail is reduced by using brass cylinders instead of cast iron ones, or by using oil-impregnated leathers as developed, for example, by the Lee Howl firm. And although the Bangalore pump uses neoprene (acrylo nitrile rubber) "leathers", it is generally felt that no synthetic material is yet as good as leather for this purpose. The problem is, of course, eliminated altogether by pumps whose operation does not depend on the use of leather washers, such as the Mono pump.

The next most significant cause of pump failure is trouble with valves in the cylinder, and repairs again mean hauling the rods, riser pipe and cylinder out of the well. Ball valves are normally very simple and trouble-free, but suffer from the defect that pounding of the ball deforms the metal seat on which it rests. Poppet valves with rubber cushioning have sometimes been more effective in the long term for this reason. Other common problems with hand pumps are breakages of pump rods or pump rod couplings.

Although a wise choice of pump avoids some of these difficulties, regular maintenance is still the key factor. The table provided on the next page sets out in detail the maintenance needed on the simpler kinds of hand-pump. It refers specifically to the Dempster model 23F, to the Craelius pump, and to comparable pumps made in India (Wasp, Kirti and Kaveri) and in Britain (Godwin and Lee Howl). The table is based on advice obtained from manufacturers, and on the maintenance schedule recommended by SATA in Cameroon. Where other types of pumps are used, this table should be amended in the light of the makers' instructions.

Village pumps are often used very intensively, and the table recommends a correspondly high level of maintenance. In some instances, it would lead to pumps being over-maintained, but that is obviously preferable to the present state of neglect found in most areas. Frequency of maintenance can be adjusted for lightly used pumps.

A key decision which must be taken is which of these tasks is to be carried out by a responsible villager, and which by a professional maintenance team. Current policy in the Oxfam/CDTF Tanzania project (TAN 6) is to give a high degree of training to the villager concerned, and make him responsible for virtually all these tasks -- with the possible exception of some of the annual ones. In most cases, however, it will be wise to have a professional maintenance team visit the pump every two or three months. In these instances, the daily, weekly and monthly tasks must be carried out by villagers except in the months when the professional team comes. Since it will almost never be practicable for the team to visit more often than once a month, daily and weekly tasks must obviously always by the responsibility of the village.

It will always be wise for all tasks relating to the maintenance of pump cylinders in deep wells to be left to professional technicians. Such work involves dismantling the top of the pump, hauling up the riser pipe and pump rods, and dismantling these by unscrewing their component lengths. Equipment capable of supporting the riser pipe assembly while the technician works on it may be necessary, and the job is made easier if pump rods and pipe come in the same lengths, with the joints which need to be unscrewed at the same point on both the riser pipe and the rod.

The activities of the maintenance team can also help to strengthen the villagers' ability to cope with their own technical problems if a small degree of training is given each time the team visits the village. The team should, in particular, re-train villagers in any maintenance task which appears to be neglected.

The maintenance team should also consult villagers about any difficulties encountered in operating the pump. A pump will usually show symptoms of malfunctioning before it actually stops working, and villagers may notice a slight falling off in the amount of water pumped which might not be obvious to a visitor. Another important function of the maintenance team should be to keep *records* of how often each pump is visited and what faults it develops. This allows the regularity of maintenance to be checked and shows up any pumps which need replacing. The villager responsible for maintenance should also be encouraged to keep a log, to show that all tasks are regularly carried out, and also to record the onset of any symptoms of malfunctioning.

It is important that professional technicians and villagers responsible for maintenance should have the correct tools in the correct sizes, for doing the jobs expected of them. Spare parts kept by the maintenance team or by the responsible villager will usually include plungers (also called buckets or pistons), leathers, valves, nuts and bolts, handles, pump rods and connectors. The team will need transport, or a single maintenance man just a motor bike.

If pumps are maintained on this basis, breakdowns will be very rare. However, some projects have provided villagers with stamped and addressed postcards which they can use to summon an emergency repair team when this is necessary, and this or some other arrangement for dealing quickly with breakdowns will always be necessary.

SCHEDULE FOR MAINTENANCE OF SIMPLE BOREHOLE PUMPS

(see also figure 4)

daily tasks:

1. lock and unlock the pump at hours agreed by the village.
2. clean the well-head.

weekly:

1. thorough clean-up of pump, well-head and surroundings.
2. oil or grease all hinge pins, bearings and sliding parts, after checking that no rust has developed on them.
3. record any comments from users about irregularities* in working tightness of parts, leaks from stuffing box, fall-off in water raised). Correct these where possible.

monthly:

1. if necessary, adjust the stuffing box or gland (this does not apply to the Craelius pump). Usually this is done by tightening the packing nut. This should not be too tight – there should be a slight leak when the adjustment is correct.
2. check that all nuts and bolts are tight, and check that there is no evidence of loose connections on the pump rods.
3. check for symptoms* of wear at the leathers, noting any comments from users about any falling off in the water raised. If the pump fails to raise water when worked slowly (e.g. at ten strokes per minute), replace the leathers.
4. carry out all weekly maintenance tasks.

annually:

1. paint all exposed parts to prevent development of rust.
2. repair any cracked concrete in the well-head and surrounds.
3. check wear at handle bearings and replace parts as necessary. On the Craelius pump, worn bushes can be replaced by short sections of pipe of suitable diameter.
4. check plunger valve and foot valve; replace if found leaking.
5. check the pump rod and replace any defective lengths or connectors.
6. replace packing at the stuffing box or gland (does not apply to the Craelius pump).
7. carry out all monthly maintenance tasks.

* Typical symptons are as follows:

A. Noisy working or tightness of parts usually indicates faults with the top-end mechanism, though stiffness may be due to tight-fitting leathers, or noise to a badly fixed pump rod slapping against the side of the riser pipe.

B. If the pump delivers a reduced amount of water, this may be due to worn leathers, or less often, to faults with valves or a leaking cylinder.

C. If the pump handle works easily but no water comes, it may be due to any of the factors listed in B, or to the well drying up, or to a blockage at the foot valve, or if the pump handle moves with no resistance at all, it may mean the pump rod has broken.

15. Some pumps currently under development

Although the foregoing sections cover all that need be said about pump packages, specific mention must now be made of three potentially important pumps which are still being developed — a new Canadian pump, the pedal-operated Vergnet pump, and the Petro pump. With none of these is it possible to specify maintenance requirements precisely, so it is not possible to present these pumps in the context of a package.

The new Canadian pump is constructed mainly of plastic, with two aims in view: to make local manufacture of pumps easier, and to make possible a high degree of village self-reliance. Many countries do not have iron foundries or steel plants, and therefore cannot manufacture conventional metal hand-pumps. However, some of these countries do have plastics factories with extruders and moulding machines suitable for making plastic pump parts. Indeed, many of the pump's components are already manufactured in developing countries, because they consist simply of lengths of standard plastic pipe. Maintenance is therefore simplified because the number of specialised spare parts is greatly reduced. For example, conventional pump seals are often made of material not easily available in the village, but the pump seal in this device consists of a piston ring which can be made simply by cutting a thin slice from the end of a standard polyethylene pipe.

The development of this pump has been sponsored by the International Development Research Centre (IDRC) based in Ottawa, Canada. The pump has been undergoing field tests in Malawi and Ethiopia. It has also been used in comparative studies in Nicaragua and Costa Rica, where it was tested alongside the Battelle pump mentioned in Section 2. The verdict, released in January 1978, was that the IDRC pump has "good points", and is suited to a "lower level of technology" than the Battelle pump. It would be especially appropriate where, "foundry facilities are not available but local manufacturing is desirable", and where wells are not excessively deep.

Another unusual pump undergoing field tests is the Petro pump, designed by two Swedish engineers. It has a conventional mechanism at the ground surface, but inside the well, in place of the pump cylinder, there is a length of elastic rubber tube around which is wound a spiral of steel wire, with a non-return valve attached to both ends of the tube. The lower end of the tube is kept fixed in place against the walls of the well. Working the pump handle up and down successively stretches and releases the rubber tube. The steel wire spiral around the tube is designed to force the tube to contract in volume as it is stretched, thus forcing water up the pipe to the ground surface. The design of this pump eliminates some of the problems experienced in the maintenance of other types — it has no "leathers" to wear out, and when maintenance of valves is required, it is much easier to lift out of the well than most types as the method of fixing the bottom end of the rubber cylinder is designed to ensure ease of removal.

The IDRC and Petro hand-pumps are only two of several new types of pump which have been developed in recent years. Among the most novel have been designs by French manufacturers (Mengin and Briau), whereby the pumping mechanism in the well is driven by hydraulic pressure instead of by the conventional

pump rods. One of these hydro-pumps, the Omega, has a conventional lever-ar for hand operation. But the Vergnet pump, manufactured by Mengin, is distinct in being foot-operated (figure 5).

The cylinder of the Vergnet hydro-pump is located, as usual, below water level in the well. It is linked to the surface by two pipes: one a driving pipe connected to a pedal; the other a delivery pipe through which the pumped water emerges. The whole system is filled with water, the pedal when at rest being in the raised position. The operator presses on the pedal with his foot, thus pushing water through the drive pipe and into the pump cylinder. This has an elastic lining or diaphragm which replaces the piston or plunger in an ordinary pump. When the pedal is pushed down, the elastic lining expands and pushes water out of the cylinder and up the delivery pipe to the surface.

At the end of the stroke, when the operator removes his foot from the pedal, the elastic lining goes back to its original shape, pushing water up the drive pipe and restoring the pedal to its original position. The cylinder has a conventional foot valve and also a delivery valve at the entrance to the delivery pipe. So as the elastic lining goes back, water flows through the foot valve, from the well into the cylinder.

There is no connection between the drive and delivery system, except for a clack valve, which replaces any water lost by leakage from the delivery pipe. The pump works very satisfactorily at depths down to about 60 metres.

The Vergnet hydro-pump was one of several tested by the Comité Inter-Africain d'Etudes Hydraulique (CIEH), an international organisation based at Ouagadougou, Haute Volta. UNICEF also participated in these tests. Other pumps tested included two made in Africa, the ABI (from Ivory Coast), and the Craelius pump (made in Kenya see figure 1). With the Vergnet hydro-pump, the PVC used for the rigid cylinder was found to develop cracks, and a stainless steel cylinder is now used instead. This relatively costly material is advisable in parts of West Africa (e.g. Liberia, Sierra Leone) because groundwater is sometimes acid enough to cause rapid rusting in galvanised steel components.

One advantage of the Vergnet pump is that in wells less than 30 metres deep, light-weight flexible piping can be used, making installation and maintenance easier. Two men can easily lift a pump cylinder out of the well without tripods or special tools. However, the number of occasions when the pump cylinder has to be lifted out should be less than with a conventional pump, since all rubbing parts are located at the surface where they are readily accessible.

The Vergnet hydro-pump is notable as the only radically new type of manually-operated tubewell pump to have gone into regular use in recent years. By June 1977, there were 2,000 being used in West Africa, and 3,000 by October 1978. The largest number (over 500) are in the Ivory Coast where they have been adopted for a large water resources project in the cocoa belt. In Mali under one project 70 of the pumps had been installed by April 1977. Experiments in which windmills have been used to drive Vergnet pumps have also been carried out at the Institut Universitaire de Technologie, in Dakar, Senegal.

Typically, the hydro-pumps in West Africa are working at depths from 20 to 60 metres below ground level. Their performance has been good, though there have been adverse comments on their high cost and dependence on imported spare parts.

One factor affecting social acceptability is that pregnant women find them difficult to use.

16. Comparable problems with wind-pumps

When pumps need to be operated continuously for long periods, either to fill a storage tank for a village supply, or to provide water for irrigation, it is desirable to find some alternative to manual operation. In these days of rising fuel costs, wind-pumps are attracting much attention as a low-cost method of doing this.

Several of the hand-pumps discussed in this report can readily be adapted for windmill drive – indeed, the complex guide rods on the Wasp pump illustrated in figure 1 are the result of designing this pump so that it is equally suitable to be driven by hand or by a windmill mechanism. (The handle can be detached and the pump rod can be attached instead to the connecting rod from a crank at the head of the windmill, driven directly by the windmill's sails.).

It is a matter of some interest that the choice of a windmill mechanism to drive small pumps of this kind raises exactly the same issues concerning maintenance as does the choice of a similar hand-pump. Once again it is necessary to decide between highly expensive mechanisms requiring little village-level responsibility, and cheaper, simpler mechanisms which make heavy demands on local people both for operation and maintenance (though efforts are currently under way to produce a windmill which will be intermediate between these two extremes).

So with regard to the windmill tower, sails, crank, and connecting rods, there is a basic choice between high quality, factory-made equipment, or equipment which can be made locally, often from local materials, but also using some imported components. Among the more expensive wind-pumps, one is advertised as a 'Rolls Royce of Windmills' – a description which describes both the quality and price of several makes. These machines are of all-metal construction, are self-adjusting for all normal wind conditions, and are self-lubricating. Such wind-pumps may be capable of running for months at a time without attention, and like the hand-pumps described in paragraph 11 above, they can be adequately maintained by trained technicians who service them at fairly long intervals.

In contrast, the 'Cretan' type of wind-pump, which is often favoured where a simple, inexpensive mechanism is required, has cloth sails (cotton, linen) which need to be spread to their fullest extent in light winds, and furled during gales, so that apart from any maintenance requirements, these machines demand attention from the operator every time the wind changes significantly in strength. This procedure has been simplified in one wind-pump project (ETH 83) where the sails have been designed so that they can be very simply unhooked from the windmill arms; in a strong breeze, mills may then operate with only two sails set, where in lighter winds they can carry a maximum of eight. The owners of these windmills take all the sails off them every night, so in practice, they only operate while there is somebody in the vicinity to keep an eye on them.

Another type of wind-pump suitable for local construction in a rural situation is the Sahores windmill, developed with the help of the World Council of Churches. This has sixteen small canvas sails in a 3-metre diameter wheel. These need much

less adjustment than the sails of the Cretan machine – they are linked together by lengths of elastic, which stretch as the force of the wind on the sails increases, so enabling the sail to turn away from the wind automatically. This prevents the machine from speeding out of control as the wind strengthens. When there is not much wind, the elastic pulls the canvas so that the maximum area of sail is exposed to the wind, enabling the sails to turn even in a relatively light wind. In fact, a minimum wind speed of 7 km/hour is needed for this wind-pump to function, at which speed it will pump 120 litres/hour from a water level 6 metres deep. Winds of perhaps twice this speed are needed for most efficient operation, when much larger quantities of water can be pumped.

It should be noted that wind speeds in most tropical regions are, on average, lower than in the temperate zone, and windmill designs have to allow for this. The best wind conditions are usually found close to the sea or large lakes.

The use of timber, bamboo, canvas, and elastic in the Sahores windmill makes construction easy, but means that parts have to be replaced or repaired fairly frequently. It may also be advisable to dismantle such wind-pumps or remove the sails, during seasons when tornadoes or hurricanes are expected. Thus in addition to the maintenance required by the pump mechanism itself (which will be much as described in paragraph 14 and figure 4), this type of wind-pump requires repairs to timber and canvas parts, and occasional dismantling either as a precaution, or to ease repairs. One may conclude that while such windmills are very suitable for communities and individuals who will take a close interest in them and spend time on them, they are likely to be a complete failure in communities lacking the motivation or skill needed to keep them running.

The project using Cretan-type mills already mentioned (ETH 83) is one of the most successful recent experiments in the application of very simple wind-pumps*. The project is situated on the Omo River in Ethiopa, from which the wind-pumps raise water through a small head for the irrigation of farm land. The success of this project is due as much as anything to the exceptional effort which has been made in educating local people in the necessary techniques and skills, and in the people's interest and eagerness to learn. This educational programme has included the issue of cassette tape recorders to windmill operators, which play back detailed instructions on the working of the windmill and on irrigation techniques, recorded in the local language. Another factor in the success of this project is that the windmills are being privately purchased by individual farmers through a system of payment by instalments, so that the farmers assume early responsibility for ownership and operation. Indeed, one farmer commented that there is not time to look after both a windmill and a cow, so demanding is the windmill and the irrigation facility it provides; the cow has therefore been placed in the care of one of the farmer's friends. As with hand-pumps, then, simple, inexpensive machines may be quite demanding for those who use them.

To complete this comparison of wind-pumps and hand-pumps, it is worth referring again to the different packages which were identified with regard to hand-pump maintenance. Except in areas where there is a tradition of windmill building, such as Crete (wind-pumps) or Afghanistan (wind-powered grain mills), a *package for*

* See Appendix 2, paragraph 2.

total village self-reliance (defined above in paragraph 9) is rarely practicable. However, experience with the Cretan type of windmill (and perhaps with the Sahores wind-pump) indicates that a *package for partial self-reliance* (paragraph 10) using a mixture of factory-made components and local construction is definitely feasible, provided that the motivation exists, and provided that the package contains a considerable component of training for local people in the use of these machines. The precise nature of the social component of this type of package will depend on whether the wind-pumps are individually owned (as in the irrigation project described above), or whether they are communally owned (for example, where wind-pumps are used to fill storage tanks for village water supplies, as occasionally in project LES 16).

Where a *package involving elimination of village level responsibility* (paragraph 11) is considered, it will be necessary to use sophisticated, factory-made wind-pumps, which may be too expensive for many applications, but which may occasionally be justified, as with the more expensive hand-pumps, where a reliable water supply is the first priority.

17. Conclusion

It has seemed useful in this paper to draw a contrast between three design philosophies for pumps, and to show how each is related to a different package of measures. It is apparent too that these three design philosophies can be applied as much to wind-pumps as hand-pumps, and possibly to other machines which might be used in a rural development context.

Which package, and which design philosophy one adopts depends very much on the *objectives* of the project in relation to such concepts as 'development' and 'welfare'; 'self-reliance' and 'dependence'. Engineering is always related to social ideals and objectives, and the product being designed always forms part of a system which includes a large social component. A 'systems map' which illustrates this appears as figure 6. The left hand side of this diagram represents the activities involved in sinking a well and installing a hand-pump – the right hand side represents the activities involved in using and maintaining it. The diagram serves mainly to symbolise the large diversity of requirements necessary for a successful project, apart from a suitable pump competently installed in the well. In the example illustrated by figure 6, the 'package' or 'system' involves a great many activities carried out by village committees, apart from the more strictly technological activities of the well drilling agency.

The purpose of this diagram is to emphasis once again that the problems experienced with hand-pumps by Oxfam, UNICEF, and numerous other agencies cannot be solved wholly, or even mainly by re-designing pumps or improving the quality of their manufacture. Quite as important is the need to pay more attention to the social components of the well/pump system or package. In some countries, it is participation by the local community which can be identified as the component of the package most crucially neglected. In other countries, however, the missing social component lies with the organ of local government, which is responsible for main-

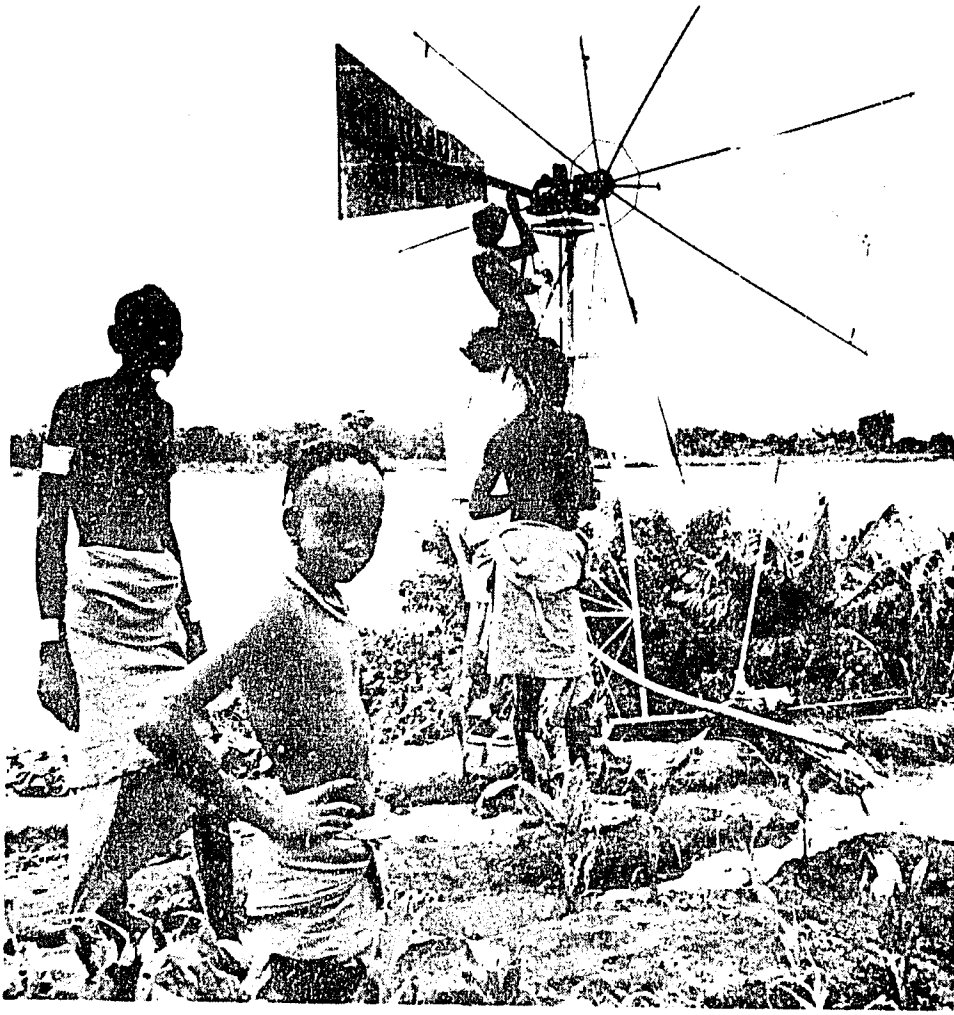

A typical "Polomo" Cretan-type windmill delivering water to a Geleb plot – the owner is on the left. Only four sails are deployed in this picture.

taining pumps – the 'pump maintenance agency' and the 'travelling technicians' indicated on figure 6.

Some of these problems may be quite intractable, and may lead to the view that a minimum maintenance philosophy based on Mono pumps or something similar is all that remains. However, it is important to be clear about overall objectives, and the final conclusions of this report may be summarised as follows:

1. Any organisation planning to implement a project involving wells and pumps should first clarify its objectives, especially with regard to development and welfare.

2a. If the objective is primarily to provide drinking water and to do this without delay, an appropriate strategy may be to adopt the package described in paragraph 11, and to choose pumps which require a minimum of maintenance.

2b. If, however, the objective of the project is development on a broad front, and the water supply is intended to play a catalytic and educational role in the development process, it will be more suitable to adopt either of the packages described in paragraphs 9 and 10. Of these, the second, which involves partial village self-reliance, will be most generally applicable. The key element in this package is the social and community development input, and the village-level activities to which they lead. This is illustrated by the systems map (figure 6) which indicates four separate activities in which a village committee or other group could participate in the construction phase, and two activities in the operating phase.

3. Any agency involved in well and pump projects should ensure that the whole of the relevant package is adopted, including the training of villagers responsible for maintenance and the organisation of a professional back-up service with adequate transport, spare parts, and management (including record-keeping – paragraph 14).

4. Any agency wishing to promote the local manufacture of hand-pumps for deep wells should be prepared to equip a workshop with suitable machine tools and train workers with the necessary skills – simple tools and traditional skills are rarely adequate. Pumps such as the Craelius model (figure 1) which are constructed from lengths of pipe and which do not include any castings in their construction require simpler workshops than most other types – which is why this pump design has been quite widely manufactured in Africa, most recently at the Shinyanga wells project in Tanzania.

Appendix 1

Some Hand Pump Manufacturers

India

Charotar Iron Factory, opp. New Ramji Mandir, Anand, Gujarat.
(makers of a pump similar to the *Wasp*).
Coimbatore Water and Agricultural Development Project, 69 Venkatasami Road, R. S. Puram, Coimbatore 641002.
(makes *Jalna* type pumps).
Dandekar Bros Ltd, Shivaji Nagar Factory Area, P.O. Sangli, Maharashtra.
(*Jal Javahar* pump, also similar to the *Wasp*).
Gujarat Small Industries Ltd, Nanavati Estate, near Chakudia Mahadeo, Rakhial, Ahmedabad-23. (makers of the *Kirti* pump).
JPSR Company (Mittra Das Ghose & Co.), Howrah, near Calcutta, (makes low-lift and deep well hand-pumps).
Kirloskar Bros Ltd, Kirloskarvadi, Dist. Sangli, Maharashtra.
(makers of the *Kareri* deep-well hand pump; many other products).
Kumar Industries, P.O. Edathara 678611, via Palghat, Kerala.
(several types of low-lift and deep-well hand pump).
Lifetime Products Corporation, Industrial Area, Jodhpur.
(makers of a pump similar to the *Wasp*, but with detailed differences).
*Marathwada Sheti Sahayya Mandal, Jalna, Dist. Aurangabad, Maharashtra.
(originator of the *Jalna* hand pump; non-commercial manufacture).
Maya Engineering Works, Calcutta.
(known for the *Maya No. 6* low-lift hand pump for shallow wells).
Mohinder & Co, Kurali, Dist. Ropar Punjab.
(low-lift hand pumps).
*Senco Industries, A-12, Coimbatore Private Industrial Estate, Coimbatore-21.
(commercial manufacturers of *Jalna* type pumps, and other kinds).
*Sholapur Well Service, 560/59 South Sadar Bazaar, Civil Lines, Sholapur-3, Maharashtra. (makers of a re-designed *Jalna* hand-pump – see figure 3).
*Vadala Hand Pump, Marathi Mission, Ahmednagar, Maharashtra.
(non-commercial maker of a *Jalna* type pump; the *Jalvad*).
*Water Supply Specialists Private Ltd, Post Box 684, Bombay-1.
(makers of the *Wasp* deep-well hand pump).

Other Indian pumps have included the *Patel*, the *Mahasagar*, and the *Economy*, all with conventional pump-head assemblies. The *India Mark II* hand-pump is manufactured by several of the above firms; for details, write to UNICEF-WES, 11 Jor Bagh, New Delhi 110003.

Africa

ABI Pumps, Abidjan Industries, B.P. 343, 45 Rue Pierre et Marie Curie, Abidjan, Zone 4c, Ivory Coast.
(make *Pompe Alternative – ABI type M*; no details).
Comptoirs Sanitares de Madagascar, B.P. 1104, Tananarive, Malagasy Republic.
*Craelius Terratest Ltd, P.O. Box 40090, Nairobi, Kenya.
SAFICOCI, B.P. 1117, Abidjan, Ivory Coast.

Shallow Wells Project, Shinyanga, Tanzania.
(pump factory in operation from April 1976 making *Uganda* type pumps).
Siscoma, B.P. 3214, Dakar, Senegal.
(make various types of pump, some of French design).

Western Countries

Barnaby Climax Ltd, White Ladies Close, Little London, Worcester WR1 1PZ, England.
(makers of *Climax* pumps).
Briau S.A., B.P. 43, 37009 Tours Cedex, France.
(makers of the *Africa, Classique* and *Royale* pumps).
Consallen Structures Ltd, 291 High Street, Epping, Essex CM16 4BY, England.
(makers of *Consallen* pumps).
*Dempster Industries Inc., P.O. Box 848, Beatrice, Nebraska 68310, U.S.A.
(deep-well hand-pump, *model 23F*; simple and inexpensive).
*Etablissements Mengin, Zone Industrielle d'Amilly, B.P. 163, 45203 Montargis-France.
(makers of the *Vergnet* pedal-operated pump).
H.J. Godwin Ltd, Quenington, Cirencester, Gloucestershire GL7 5BX, England.
(fly-wheel drive, conventional and experimental hand-pumps).
GSW Limited, Hill Street, Fergus, Ontario, Canada.
(makers of Beatty pumps).
Lee Howl and Co. Ltd, Tipton, West Midlands, England.
(low-lift pitcher spout and other hand-pumps).
Monarch Industries Ltd, P.O. Box 429, Winnipeg, Canada.
(makers of *Beatty* pumps).
*Mono Pumps Engineering Ltd, 1 Sekforde Street, London EC1, England.
(makers of the unique, low-maintenance *Monolift* hand-pump).

(*denotes pumps used by, or on trial with UNICEF).

Appendix 2

Wind Pump Manufacturers

High-cost, low-maintenance pumps suitable for packages which eliminate most village-level responsibility.

Dempster Industries Inc, P.O. Box 848, Beatrice, Nebraska, 68310, U.S.A.
(makers of *Annu-Oiled* windmills – oil once a year).
Southern Cross Engine & Windmill Co. Ltd, Grand Avenue, Granville, Sydney, N.S.W., Australia.
(makers of *Southern Cross* wind-pump).
Sydney Williams & Co. (Pty) Ltd, Withams Parade, P.O. Box 22, Dulwich Hill, N.S.W. 2203, Australia.
(makers of the *Comet* wind-pump).

N.B. Many of the manufacturers of hand-pumps listed in Appendix 1 supply pumps suited to use with windmill drive, or have experience in building windmills.

Wind-pumps constructed locally. Designs, drawings, or ideas about construction can be obtained from the following sources:

Cretain-sail windpumps for low wind regimes as used in the Gambia – see *How to build a 'Cretain Sail' Windpump* by R.D. Mann (1979).
Cretan-type windmills for higher wind regimes as used in Ethiopia – see *Food from Windmills*, by Peter Fraenkel (1975).
Both available from Intermediate Technology Publications Ltd, 9 King Street, London, WC2E 8HN, England.
Sahores windmill – plans available from Commission on the Churches' Participation in Development, World Council of Churches, 150 Route de Ferney, P.O. Box 66, 1211 Geneva 20, Switzerland.
Other types – ask for 'wind-pump rack' from Oxfam (Overseas Division), 274 Banbury Road, Oxford, OX2 7DZ, England.

Hand-pump Maintenance in the Context of Community Well Projects

Many governments, with the assistance of official agencies and voluntary organisations, have tackled the water supply problems of rural communities by drilling tubewells and boreholes. Unfortunately, a vast number of these tubewells are useless in practice because thousands of the hand pumps have broken down. Why should this be so? This manual suggests that one of the major reasons for the breakdown is that the community or the village have not been adequately involved in the project in the first place, and have not accepted the social responsibility for the task of maintaining the pump.

Of course many of the pumps themselves suffer from design faults and construction defects, but the hardware can fairly readily be repaired and design faults corrected. However, "an effective pump system is not simply a technological object but a conglomerate of technology, institutions and people" *(WHO)*.

This volume puts forward various strategies which, if followed, might overcome the social problems. It also examines and evaluates different types of pump, and puts forward a schedule of recommended work that should be undertaken by the community or the villager responsible for the pump.

The book is a valuable contribution which should be read by all involved in development work, and particularly by those concerned with rural water supplies.

Arnold Pacey is a freelance writer on technology. He was a lecturer in the history of technology at the University of Manchester Institute of Science and Technology from 1964 to 1972. From 1973 to 1976 he was with Oxfam, the UK-based charitable organisation working for the Third World. He has been connected with the Intermediate Technology Development Group since 1969, and, as a member of their Water Panel, edited *Water for the Thousand Millions*, the panel's paper for the 1977 United Nations Water Conference. He is also the author of *The Maze of Ingenuity: Ideas and Idealism in the Technology of Development* (Allen Lane).

ISBN 0 903031 70 1

Intermediate Technology Publications, 9 King Street, London WC2E 8HN, U.K.