MIT

DEPARTMENT OF CIVIL ENGINEERING

SCHOOL OF ENGINEERING
MASSACHUSETTS INSTITUTE OF TECHNOLOGY
Cambridge 39, Massachusetts

CONSTRUCTION AND USE OF A PHYSICAL MODEL OF THE RAINFALL-RUNOFF PROCESS

by

Robert A. Grace and Peter S. Eagleson

HYDRODYNAMICS LABORATORY
Technical Note No.11

Prepared Under

The M.I.T. Fund for Basic Research in the Physical Sciences
and
The M.I.T. Inter-American Program in Civil Engineering
Under the Sponsorship of
Agency for International Development,
U.S. Department of State

Carnegie Corporation
Creole Foundation
The Dow Chemical Company

June, 1966

R66-20

HYDRODYNAMICS LABORATORY
Department of Civil Engineering
Massachusetts Institute of Technology

CONSTRUCTION AND USE OF A PHYSICAL MODEL OF THE RAINFALL-RUNOFF PROCESS

by

Robert A. Grace and Peter S. Eagleson

June, 1966

Technical Note No. 11

Prepared Under

The M. I. T. Fund for Basic Research in the Physical Sciences
DSR 4210

and

The M. I. T. Inter-American Program in Civil Engineering
Under the Sponsorship of

Agency for International Development,
U. S. Department of State
DSR 9865

Carnegie Corporation
DSR 9205, 9437

Creole Foundation
DSR 9597

The Dow Chemical Company
DSR 9651

ABSTRACT

This technical note describes the design, construction and initial use of a complete physical model of the rainfall-surface runoff process.

The complete physical model consists basically of a rainfall generator, scaled model, and a weighing device for recording the model runoff. The rainfall generator features individually-controlled modules which use small tubes as the drop formers.

Initial tests indicate the feasibility of the facility, illustrate its limitations, and point to areas where additional features would be useful. It is shown that the rainfall-surface runoff process can, in fact, be modelled physically with reasonable precision, and various means of improving this accuracy of prediction for future tests are suggested.

ACKNOWLEDGMENTS

This study was carried out at part of a general investigation of methods for the analysis and synthesis of hydrologic systems which is being conducted under the M. I. T. Inter-American Program in Civil Engineering (I. A. P.) in collaboration with the Facultad Nacional de Minas, Universidad Nacional de Colombia, Medellin, Colombia. Financial support for this work was provided by funds available to the Inter-American Program. Contract administration was provided by the M. I. T. Division of Sponsored Research under DSR 9437.

The cost of the equipment used in this investigation was met by the Massachusetts Institute of Technology through the Fund for Basic Research in the Physical Sciences established by Alfred P. Sloan, Jr.

The work was performed by Mr. Robert A. Grace, research assistant in civil engineering under the supervision of Dr. Peter S. Eagleson, professor of civil engineering. Frederic March assisted in preliminary studies.

TABLE OF CONTENTS

LIST OF FIGURES AND TABLES

1 INTRODUCTION

Perhaps the greatest single problem facing the hydrologist during both the planning and the design for water resources development is the accurate prediction of the time variation in streamflow at some point in a drainage basin.

The streamflow variation may be considered to be a random process which possibly contains some discrete periodic fluctuations. The statistics of this stochastic process are of vital interest to the engineer. At the planning stage of water resource development, annual and seasonal means and trends are of principal concern, but when designing the functional components of the project, such as bridge openings and clearances, spillway sizes and elevations, etc., the extreme values are of vital importance since they provide limiting design values. Three methods of determining these statistics are suggested:

1. *Measure* the desired streamflow over a sufficient period of time. This is the "correct" technique; however, gaging stations are costly to install and operate, and the period of observation necessary for reliable estimation of the necessary extreme values is likely to be decades long. Such a procedure is out of the question for prompt resource development where long-term records are unavailable.

2. *Synthesize* the desired statistics through a superposition of accumulated short-term streamflow measurements on other streams in basins which are judged to be similar in topography, geology and vegetation and which are climatologically similar but independent. This technique is hazardous due to the conflicting requirements of similarity and independence and requires many costly stream gaging stations.

3. *Synthesize* desired streamflow statistics from the precipitation statistics through use of an analytical model which relates rainfall and runoff in terms of the physical properties of the drainage basin. Measurement of point rainfall is relatively inexpensive, and the joint requirements of homogeneity and independence are sufficiently less severe when applied in only the climatological sense as to make combination of short-term precipitation records a feasible procedure. Furthermore, the precipitation statistics, once established through measurement, are relatively stationary while the streamflow data form a time series which is highly nonstationary due to both natural geomorphological processes and to the acts of man.

The third technique of the list above is a compromise of considerable value, and the work reported herein is devoted to some aspects of the determination of the analytical rainfall-runoff relation necessary for its implementation.

Anticipating the need to explore in detail such questions as the sensitivity of the input-output relation to storm and basin characteristics and to devise objective computational methods for the separation of the surface and subsurface components of streamflow, an investigation of the usefulness of laboratory drainage basins was initiated first.

When it had been indicated [Grace and Eagleson (1965, 1966b)] that it was *theoretically* possible to model the rainfall-runoff process for a certain range of prototypes, a complete physical model of the rainfall-runoff process was designed, constructed, and tested. This is the work which is reported herein.

2 PREVIOUS WORK

2.1 MAMISAO

Apparently the first attempt at modelling the rainfall-runoff process in the United States was carried out by Mamisao (1952) whose general aim was to predict the effect of cultural practices on the run-off hydrograph. He felt that a model useful in allowing this prediction would have to be verified first, and he chose for a prototype watershed a 129-acre area of rolling terrain (8% to 10% slopes predominant, some 20%) part of which was in crops and part fallow. He obtained model dimensions by conducting a dimensional analysis and lumping several dimensionless groupings together in a type of "roughness term." The horizontal scale was 1:450, the vertical scale, 1:240. He also introduced "distortion factors" to account for dissatisfaction of some similarity criteria.

Mamisao conducted tests on various types of drop formers to be used in his rainfall-generating equipment and settled on a "rainfall jet" featuring a copper tube of length 3" and inside diameter 0.0635" into which was inserted a 0.052" copper wire. This arrangement gave rainfall intensities of from about 1 to 16 inches per hour, the latter at a head of 36 inches. In the final manifold, 6' x 8' x 2", jets were located at 2 1/2" centers, and the head on the manifold was changed by valving.

A Thiessen-computed average rainfall over the prototype basin was modelled. Five-minute increments in the prototype appeared as 14.2-second increments in the model after Froude-scaling. Discharge measurement was done by collecting the outflow in 1-gallon cans at 7.1-second intervals.

Initial tests using a smooth mortar surface for the model predicted higher discharges than actually occurred, possibly because of the lack of infiltration in the model The timing of events was, however, well reproduced. Mamisao sought to reduce the discharge discrepancy by covering the model with burlap which delayed the appearance of outflow and retained some of the model rainfall. He does not discuss this in detail, however.

Mamisao concluded that improvements might be realized over his tests by having more accurate prototype hydrographs, automatic collection of runoff, a precise method of adjusting the pressure head on the manifold, and a rainfall generator capable of areal nonuniformity.

2.2 CHERY

The second American study of physical hydrologic models was undertaken by Chery who recently (1965) published a preliminary report on his initial work. He designed, constructed and tested a rainfall generator and model with the associated instrumentation for controlling and measuring inflow and outflow.

Chery chose the important variables to be considered in his similarity analysis by reasoning, taking into consideration the concepts and results of other investigators. He lumped certain quantities into an "indefinite resistance term," figuring that he could establish similarity by altering the physical properties of the liquid used and the model surface until the scaled model runoff hydrograph provided a good fit for its prototype counterpart. Chery did not consider the effects of drop size, distribution, or rainfall energies. He assumed that viscous effects were negligible compared to gravitational effects.

The prototype area modelled in impervious fibreglass at a length ratio of 1:175 and no vertical distortion was a 97.2 acre, arid, sandstone

and shale base basin within which 26% of the slopes were from 3 to 10%, the remainder steeper, to 35%. Two weighing gages were located on the periphery of the basin. The Φ index for the basin is typically 50 to 70%.

Seventeen thunderstorms, with peaking times of from 4 to 14 minutes, were selected to be modelled, and the model rainfall intensity range was set at from 0 to 10 ins /hr. This model input rate was governed by positive displacement gear pumps, driven by variable speed electric motors, which supplied water to groups of polyethylene tubes (2 feet long, 0.011 inches inside diameter) through a distribution head and junction manifold. There was one tube over each 4 square inches of model surface area. Froude scaling was used.

A plastic programming drum was used to set a sequence of pump motor speeds for the 11 modules each of which covered 18 square feet of surface. The outflow was measured by weight.

Chery encountered endless problems, some of which he has not (1966) remedied, many for which he makes recommendations. Mechanical problems in the motor-pump system were frequent. Changing line voltages caused unwanted speed changes. Calcium deposits were left in the system when tap water was used as the working fluid. When distilled water was put to use, the model rainfall tended to collect as small puddles on the model surface. Chery experimented with various methods of combating the latter development, concluding it was best to satisfy the initial surface storage requirement of the model before starting the rainfall input.

Chery recommended the use of stainless steel tubing, leveling screws for the model, independent and detachable modules for his future work, and he advised standardized operational procedures and a system designed with the possibilities of corrosion in mind. His continued tests will devote considerable attention to the effects on the model hydrograph of varying the working liquid and its physical properties.

2.3 CHOW AND HARBAUGH

There is little published information available on the hydrologic modelling equipment and overall objectives of this study being undertaken at the University of Illinois. A brief description is given in the January, 1966, issue of Computers and Automation, page 40.

The paper of Chow and Harbaugh (1965) described the rainfall-generating equipment which features separate modules 2' x 2' x 1" made of 3/8 inch plexiglass through which protrude polyethylene tubes of 0.023-inch inside diameter and unspecified length placed on 1-inch centers. The rainfall generator was designed to give rainfall rates of from 0.8 to 13 inches per hour.

The overall size of the rainfall generator is 40' x 40'.

2.4 JAPAN

There are a number of rainfall apparati in operation in Japan, but only two appear to have a program which includes basin models. These are at Kyoto University in Kyoto and at the Public Works Research Institute in Chiba City.

3 RAINFALL GENERATOR

3.1 INTRODUCTION

3.1.1 The Requirements

The model rainfall generator must be able to simulate the scaled magnitude of rainfall intensities occurring in the field. In addition, this apparatus must be able to reproduce a simulated time sequence of rainfall depths. It must therefore be capable of switching from intensity to intensity at a rate which can be changed from experiment to experiment, as the time scale will not necessarily remain constant for different tests. The time between changes will have a maximum and minimum depending upon the time increments in the prototype as well as upon the time ratio resulting from the physical model characteristics and their relationship to their prototype counterparts. Also the time over which a change in rainfall intensity takes place should be minimal.

Ultimately, the rainfall generator should be capable of modelling the spatial variation of rainfall intensities as well as the time history of rainfall depths.

A major requirement is that all experimental runs should be reproducible. Thus all settings on equipment should be capable of exact adjustment. This requirement dictates more than the above, however. It means that there should be no deterioration of equipment with time (e.g., corrosion) and no radical changes in the water used in the system (e.g., algae, precipitates). The latter of these points is dealt with in Chapter 3.5.

3.1.2 The Components

The rain-maker must be divided into separate sections, each individually controlled, to effect the spatial variability of model rainfall

required. These individual sections are termed *modules* and will be discussed at length in Chapter 3.3.

In addition, to avoid considerable problems in system calibration, each complete module unit should be identical. Thus piping, for example, should be of the same sizes and lengths in all cases. This piping should be of minimal length and diameter to keep the response time of the system as low as possible. A comparatively simple method of meeting these requirements is to utilize a *head tank* which will completely cover the modules, each module then having its own direct tap from the head tank. The head tank and associated equipment are described in Chapter 3.2; the latter includes components chosen for their resistance to corrosion.

It would be possible to design an intricate measurement-feedback-control system to provide the required flow to the modules at any time. Such a system was priced; its tremendously high cost dwarfed the attractiveness of such an arrangement from other aspects. It was then proposed to utilize the ultimate in simplicity, i.e., a small *needle valve*, to effect the changes in flow required. Valve settings would be fixed, and different discharges would be generated by opening, by means of *solenoid valves*, one or several parallel lines having different needle valve settings. The opening and closing of the various solenoids would be done electronically by a suitable *pre-set programmer*. These aspects are discussed in Chapter 3.4.

3.2 HEAD TANK AND ASSOCIATED EQUIPMENT

3.2.1 Introduction

Since the main purpose of this study is to investigate the feasibility of modelling the rainfall-runoff process, the size of the model was chosen to be the minimum consistent with this goal. Because the

similarity analysis pointed toward model usefulness only for "small" urban areas, the necessary model size was comparably restricted and 5 feet square was chosen.

3.2.2 Head Tank

Because of the requirement that the head tank completely cover the openings into the rainfall modules, the inside diameter of the tank was set at 6'3". It should be noted that this large size will insure an essentially constant level in the tank for any normal short-duration rainfall run.

However, it is predicted that a long history of prototype rainfall history might be simulated.[1] In this case the level in the tank would drop appreciably, and an overflow pipe and pumping system would be necessary so as to maintain the level. If the flow-regulating characteristics were not altered to any great degree by changes in head of several inches and the drained volume associated with this figure was the total volume of rainfall, then an overflow pipe and continuous-return flow system would not be required. The depth of tank would have to be sufficient to accept this volume.

The depth of tank is also tied in with the desirable range in pressure heads at the modules. The greater this range, the larger the range in model rainfall intensities which can be generated for fixed flow control settings.

A relatively inexpensive tank of 2-inch-thick white pine was selected for the head tank. This tank has an inside diameter of 6'3" as

---

[1]See Grace and Eagleson (1966a)

mentioned earlier. Its height was selected as 2'6" in an effort to satisfy the requirements listed above.

A top for this tank (A in Figure 3.12) was cut from two sheets of 3/4" plywood rigidly attached together by means of metal strips. An oil tank vent cap (M) was fitted to a 1 1/2" nipple-flange assembly on the top for relatively dust-free ventilation beneath the top.

Flow into and out of the head tank can occur through several openings apart from those leading to the modules. There is also an opening for a water level indicator made of tygon tubing.

The arrangement whereby pipe openings were made into the tank is shown in Figure 3.1. A 1/2" polyvinyl chloride (PVC) nipple was selected which had at at least one end a 1/2" NPT (tapered). This thread was prolonged as a straight thread by properly machining the nipple. A brass nut was then screwed down on to the straight thread and the end of the nipple pushed through into the inside of the tank. The area around this hole was countersunk on the inside to allow a 1/2" PVC coupling to be screwed down onto the 1/2" NPT end. This coupling allowed the formation of a tight joint when screwed up against the wood with the brass nut on the other side, and it also lifted the inside end of the tubing up off the floor of the tank so as to minimize the possibility of dirt and other foreign matter getting into the lines to the modules. For the drainage lines in the bottom of the tank, the couplings were cut so that foreign particles would be drawn out, to be removed later in the pumping circuitry by the filter. A caulking compound was used on both sides at the joints to decrease the possibility of leakage.

The head tank is supported by the structure shown in Figure 3.12 and described in Chapter 3.6.

3.2.3 Pump-Mixing Tank Set-Up

A diagram showing the arrangement whereby water can be mixed with any required additives, pumped to the head tank, and possibly drained, is shown in Figure 3.2.

The mixing tank is used so as have one location where chemicals can be added to the distilled water and the resulting liquid mixed. The mixing tank is made of polyethylene and is rectangular in section having a 55-gallon capacity. This tank has a lid and is equipped with a motor-driven stirrer.

The pump is an all-bronze Bell and Gossett centrifugal pump rated at 10 gpm against a 16-foot head.

The piping arrangement is such that water can be drained from the tank to a drain, to the mixing tank, or directly to the suction side of the pump. Water might be drained to the mixing tank for restirring or adding more chemicals and then returned to the head tank. It might also be continuously circulated by the pump so that the liquid would not lie stagnant in the head tank.

The suction side of the pump is also connected to the mixing and collecting tanks so that water can be moved directly from these vessels to the head tank. In addition, the piping system is set up in such a way that the pump can be used to promote the removal of air pockets from the rainfall modules. The discharge from the pump passes to the head tank through a 5μ filter to remove foreign particles and through a check valve.

In the flow circuitry, PVC fittings, primarily 1/2"NPT, are used for all tees and crosses and at entrances to the tanks, pump and modules. These units are connected by lengths of tygon tubing. The valves are 1/2" bronze Lunkenheimer globe valves.

3.3 RAINFALL MODULES

3.3.1 Introduction

Mutchler and Hermsmeier (1965) have published an excellent summary and critical comparison of the types of rainfall simulators which have been constructed. Chery (1965) has presented a similar study. The three major types of simulator are those which use nozzles, hanging yarn or tubes.

Commerical nozzles of various types were extensively tested at an early stage and discarded due chiefly to the facts that the rainfall intensity for drops of reasonable size was too great and the rainfall pattern was far from uniform. These deficiencies are also borne out by the findings of Mutchler and Hermsmeier.

Following completion of the tests on nozzles, experiments were carried out on rainfall drop formers of the tubing type. As this type of drop former proved satisfactory for the rainfall simulator application, the hanging yarn variety of simulator was not investigated. The latter would of course have presented problems of exact control among different modules.

3.3.2 Tube Size

Stainless steel tubes of inside diameters 0.007" to 0.016" and lengths 3/16" to 3/4" were tested individually and in groups in order to obtain their discharge characteristics. It was found that several inside diameter-length tube combinations would provide the flow rates required over a realistic range of heads.

Initially, a module using tubes 0.008" in inside diameter and 1/2" in length was constructed. However, it was found that these tubes clogged very easily; hence a tube of larger inside diameter, i.e., 0.0125"

(23 gage), was selected in order to reduce this problem. In order to maintain the desired flows, the tube was then lengthened to 3/4".

This requirement is borne out by Hagen-Poiseuille's equation

$$h_f = \frac{128\nu LQ}{\pi g D^4} \tag{3.1}$$

which proved to be a reasonably valid formula (±30%, say) for predicting tube discharge for a given head. In Equation (3.1)

h_f is the head drop in feet through a tube of length L feet and inside diameter D feet

ν is the kinematic viscosity of the fluid, ft.^{2}/sec.

g is the gravitational acceleration, ft./sec.^{2}

Q is the discharge, cfs.

The test curve for the tube chosen is shown in Figure 3.3 in comparison with the results predicted using Equation (3.1).

To minimize the possibility that the discharge characteristics of the tubes change with time, distilled water is used in the rainfall simulator. This is discussed in Chapter 3.5.

3.3.3 The Modules

Various schemes were contemplated for putting together a rainfall apparatus using the 23-gage tubing selected. As rainfall rates had been calculated assuming an arbitrary tube spacing of 1", this spacing was retained.

A finished module is shown in Figure 3.4. As previously mentioned, a similar test module, but using tubes smaller than the 23-gage ones

ultimately selected, was tested initially. From the results of these tests, the module was further modified in several respects, the change in tube size included. The first of the "final" modules was tested prior to the construction of the remaining units.

The dimensions of the module are shown in Figure 3.4. The placing of the tubes is also shown in this diagram. The inside ends of the tubes are set 1/16" above the inside of the module to decrease the possibility of foreign matter entering them. There are 144 tubes per module and 25 modules in the rain-maker, making the rain-maker 5 feet to a side.

The modules are of custom-molded construction. A Boatex casting resin was used as the material for the module, and the mold for this unit was machined from a piece of aluminum which was drilled for the locating of the individual drop formers. To keep the wax, brushed on to the mold before pouring, from penetrating into the tubes, each tube was plugged with a small piece of copper wire during the casting process.

The module tops were cast in a flat aluminum mold which had provision for the placing of the PVC connections for the inlet and the vent to be cast integrally with the top.

When the top and bottom portions of each module were assembled, a continuous rubber gasket was placed between them to help sealing. The occasional small leak was stopped by using a silicone rubber sealant (GE Bathtub Seal). The top and bottom are connected together by twenty-four 6-32 bolts, with the nuts above for more easy removal of the tops. Eight of the bolts are extended below the level of the tubes on the bottom to protect these from damage when the module is set down. A pair of bolts on each side of the module is used as the location for the Z fittings which connect the modules to their aluminum support frame described in Chapter 3.6.

3.3.4 Venting the Modules

In one corner of each module there is a 1/4" NPT female connection to which a PVC nipple and tygon line are attached. Venting of the module during filling of the system or later if required, is done through this opening. Venting can also be done from the main piping system feeding each module, and each vent port can be connected to the suction side of the circulating pump; see Figure 3.5.

3.4 FLOW CONTROL

3.4.1 Introduction

The flow control electrical and fluid circuitry for one module is shown in Figure 3.5. The water from the head tank passes through a length of 1/2"PVC pipe to a side outlet cross which has four (color-coded) threaded (1/4" NPT) branches into each one of which is screwed the inlet leg of a solenoid valve. When the solenoid valve is open, the flow then passes through a short length of tygon tubing and a needle value before entering another side outlet cross and then passing into the module. Before each test the needle valve in each of the four branches is set at a particular opening for which the (dynamic) head-discharge relation is known.

The electrical system controls the solenoid valves. The major component in this system is an adjustable programming switch. The operation of this drum is to effect any sequence and combination of solenoid valve openings and closures.

3.4.2 Programmer

3.4.2.1 Introduction

The programming drum is a Sealectro Actan field-adjustable programming switch as shown in Figure 3.6. This drum has a solenoid drive which is directed by an Eagle Pulse Timer.

3.4.2.2 Pulse Timer

The model of pulse timer chosen for this application generates a train of pulses having a period which can be varied from 2.6 to 60 seconds. The pulse length is proportional to the period, having a maximum of approximately 1/60 of the period. The minimum length of pulse ($\frac{2.6}{60}$ sec) is adequate to ensure that the programming drum solenoid drive functions satisfactorily.

3.4.2.3 Programming Drum

The drum shown in Figure 3.8 has 19 contacts, or that many different circuits along the drum, and 60 separate positions around the periphery of the drum. At each drum position, there is a slot which extends the length of the drum. Pins may be slid into this slot to cause the completing of any circuit(s).

When the solenoid drive is appropriately actuated by the pulse timer, the drum turns to the next drum position. For each drum position it is possible to insert a pin in the drum opposite any of the contacts. When the drum turns so that a contact touches a pin, the circuit for that contact position is completed, and the current flows through this point. The Actan programming drum does not use relays. The current rating of the contacts is 2 amps at 115 VAC.

The electrical circuit involving the programming drum and four solenoids is shown in Figure 3.9, and the overall operation of the system is described in Chapter 3.4.4.

3.4.3 Solenoid Valves

An inexpensive, dependable solenoid valve made of a noncorrosive material had been sought from the first. Two types of such valves were found to be commercially available, both manufactured by American-Standard, Controls Division, Detroit Models S-30 and S-60. The bodies of these valves are of nylon.

Several valves of both types were tested for both hydraulic and electrical characteristics. The solenoids operate from 115 VAC, 60 cps and require only about 0.08 amps to remain open. The surge current is about three times this magnitude. The S-60 valve has far less head drop than the S-30 for a given flow and was chosen for this reason. The head discharge curve for the S-60 valve is shown in Figure 3.10.

The valve has 1/4" male NPT inlet and outlet, and its pressure rating is 30 inches of water maximum.

3.4.4 Overall Operation of Sequencing System

A schematic diagram of the sequencing system is shown in Figure 3.9. Basically, this system consists of a timer, rectifier, programmer, a number of Jones strips, and the external wiring.

The high side of the line voltage is connected to Jones strip JS1; two taps are taken off this terminal, one to the timer and one to the contacts of the programmer.

The connection through 2 to 11 drives the timer motor, M. Switch 4-3 closes just prior to the completion of a cycle of pre-set length, and switch 11-10 transfers at the end of the time cycle, resetting the timer and opening pulse contacts 4-3. The pulse generated reaches the programmer solenoid drive S and advances the programming drum by one increment.

If there is a pin located in the red (R), yellow (Y), blue (B), or gray (G) position[1] of the drum at the increment beneath the programmer contacts, the corresponding contact, say B1, closes, and current will flow

---

[1]Colors correspond to the coding of the four flow-control branch lines.

through B1 to Jones strip JSB and thence to the high side of all the blue solenoid valves which are located at B2. Current flows through these valves causing them to open and allowing water to pass through the blue piping system to the modules. The electrical circuit is completed to G and Jones strip JS2 and thence to ground.

3.4.5 Needle Valves

There were several requirements for the metering valve to be used in the rainfall generator. Chief among these was that of good, repeatable flow control. Also, it was important that the rainfall generator system use as much of the range of the valve as possible so as to minimize setting errors. Additional conditions included small size, so that the valve could be fitted into the apparatus, low cost, and a noncorrosive material which would not cause any chemical changes in the water.

Numerous needle valves of various sizes and materials were tested. The valve which best fitted the requirements outlined above was a Dragon Model 100 bar stock angle needle valve in stainless steel. The discharge characteristics of this valve, in series with a solenoid valve, are presented in Figure 3.10. The excellent linearity of the Dragon valve head-discharge curve is particularly evident in the insert of Figure 3.10 where it is compared with the second best valve.

An angle needle valve was chosen rather than a globe configuration because it was easier to vent the former in the module feed system, and the angle type was more compact and more accessible when setting changes were desired.

3.4.6 Throttles

The distance between the head tank and modules is substantial, as is evident in Figure 3.5. This distance was physically necessary, however, in order to fit into the flow control system all the components

necessary and in order to put into place the frames necessary for support of the units and the electrical wiring. The resulting head at the module is somewhat higher than desirable for generating sequences of predominantly low- to medium-intensity rainfall sequences. This would be expected without further tests (see Figure 3.3) and was verified through further discharge tests on the modules.

The easiest way to lower the head at the module, for any given needle valve setting, was to insert a throttle in the line upstream of the needle valve. The easiest place to insert such throttles was in the tygon lines where throttles were placed and tested.

These items were cut, in 1/2-inch lengths, from 9/16-inch-diameter nylon rod. A small hole was drilled in one end of the nylon cylinder, and a cone was machined out of the inside of the piece to cause a gradual expansion from the small aperture downstream to the full diameter of the nylon cylinder. The small hole provided the throttling action; the cone allowed air to pass from below the throttle out the tee vent when the system was being purged of air; see Figure 3.11.

Discharge tests conducted using such throttles indicated that a rainfall intensity as low as 0.3 in./hr. could be generated and still have drops forming at all of the needles in the modules. Tests also showed that a substantial range in light to medium rainfall intensities could be realized by using 1/32" throttles in two of the four flow control branch lines, a 1/16" throttle in one line, and no throttle in the remaining branch. This capability is shown in Table 3.1 where the yellow (Y) and gray (G) lines have the 1/32" throttles, the blue (B) branch has a 1/16" throttle, and the red (R) line has no throttle. The needle valve settings range from 1/8 to 1/2 turn open from fully closed in this example.

TABLE 3.1

Module Steady-State Discharges Possible for an Arbitrary Desired Range of From About One to Sixteen Inches per Hour (Throttles Used)

Line(s)	Flow (In./Hr.)
Y	1.2
G	2.5
Y-G	3.6
B	5.0
Y-B	6.0
G-B	7.2
Y-G-B	8.1
R	9.0
Y-R	9.8
G-R	10.8
Y-G-R	11.6
B-R	12.7
Y-B-R	13.5
G-B-R	14.3
Y-G-B-R	15.0

The various flows possible when no throttles are employed and the number of turns open from fully closed are 1/8(G), 1/4(B), 1/2(Y) and 3/4(R) are presented in Table 3.2.

TABLE 3.2

Module Steady-State Discharges Possible for an Arbitrary Desired Range of From About One to Sixteen Inches per Hour (No Throttles Used)

Line(s)	Flow (In./Hr.)
G	1.5
B	3.0
G-B	4.3
Y	6.5
G-Y	7.7
B-Y	9.0
R	9.5
G-B-Y	10.2
G-R	10.6
B-R	11.8
G-B-R	12.6
Y-R	14.2
G-Y-R	15.0
B-Y-R	15.8
G-B-Y-R	16.7

3.5 WORKING LIQUID

Distilled water was used rather than the municipal supply in order to reduce both the chance of small foreign particles and the possibility of metal salts in the water which might have deleterious effects on some components of the system, either as catalysts in the corrosion process or as precipitates. The latter was observed during early tests using water from the municipal supply.

The problem of algae forming in the water used in the tests was eliminated by hanging in the tank cloth bags having in them a quantity of Simazine[1] sufficient to give a concentration of 3 to 4 ppm.

No chemical additive was added to the water to reduce its surface tension since tests indicated that surface tension did not appear to exert an undue influence on the physical model runoff hydrograph. Supplies of various detergents were available had the influence of surface tension been a disproportionate one. A reason for not using an additive unless absolutely necessary involved foaming, since no detergent could be found which did not foam to some extent.

3.6 STRUCTURAL SET-UP

It has already been mentioned that a structural frame was necessary to support the head tank. It was also necessary to design this structure so that it would house and support the various other structural units required of the whole apparatus.

The major items in this arrangement are four steel support columns, (E in Figure 3.12), 8" x 8" WF, 7' high and having base plates L which were firmly attached to the floor by means of concrete anchors. Two 5/8" holes were drilled in each flange of these columns, at a 6" spacing, throughout the height of these members. With this arrangement it is possible to locate brackets (D) to support various frames and pieces of equipment at frequent intervals. Two long 1/2" bolts hold each bracket in place as shown in Figure 3.12. It may be seen that the bracket

---

[1]Distributed by Geigy Chemical Corporation, Ardsley, New York

straddles the column. Increasing the height or leveling of any frame resting on these brackets can be done by shimming. Frames can be bolted to the brackets.

There are three frames tied in to groups of four brackets. The top frame (C) supports the head tank (B) directly and is of solid construction, the members making up the welded frame being 5"WF steel sections. The solenoid valve wiring board frame (F), see Figure 3.6, is located below the head tank frame, but is connected to the latter rather than extending to the column brackets. An aluminum frame (G) is the next item bridging the brackets. This frame is made of 5" aluminum channels bolted together, and the spacing between these members ((H)) is such that the rain-maker modules can be slid into place and held in position by means of their Z fittings. The bottom frame (I) attached to the brackets is a large reinforced sheet of 3/4" plywood which supports the basin models used in the runoff experiments.

3.7 OTHER CONSIDERATIONS

Due to the fact that foreign particles entering the flow system could possibly find their way to the modules and clog the tubes, it was considered important to minimize the chance of dust and other foreign matter getting near the apparatus. This was done by completely surrounding the experimental area by a light plywood enclosure fitted with windows to allow light to enter the area and to permit viewing. Over the top of the enclosure was draped clear polyethylene sheeting which allows light to enter while, at the same time, keeping the dust out.

The enclosure also minimizes friendly tampering with the equipment and critical valve and other settings.

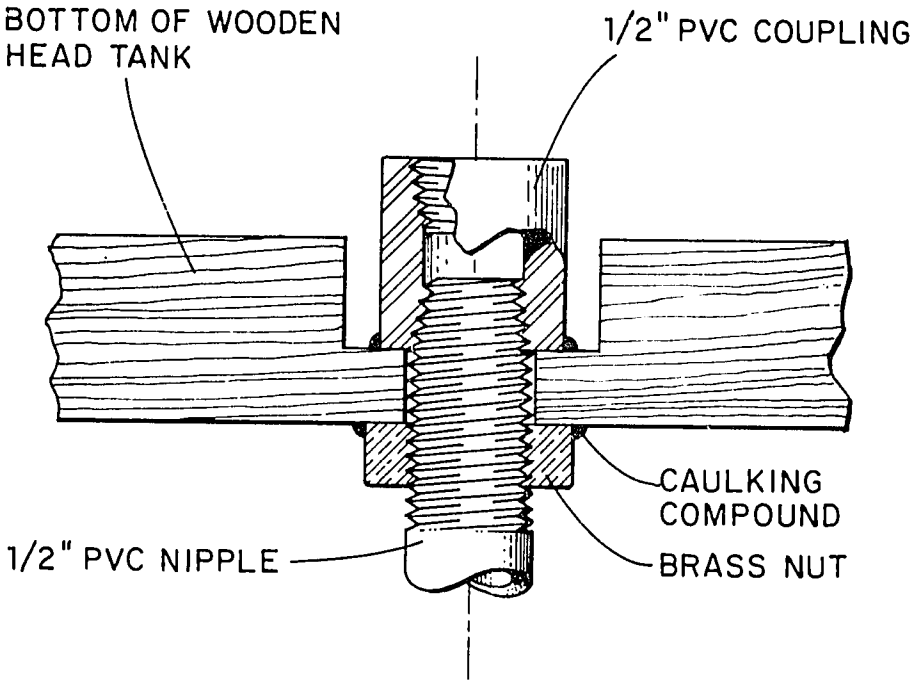

Figure 3.1: Head Tank-Pipe Connection

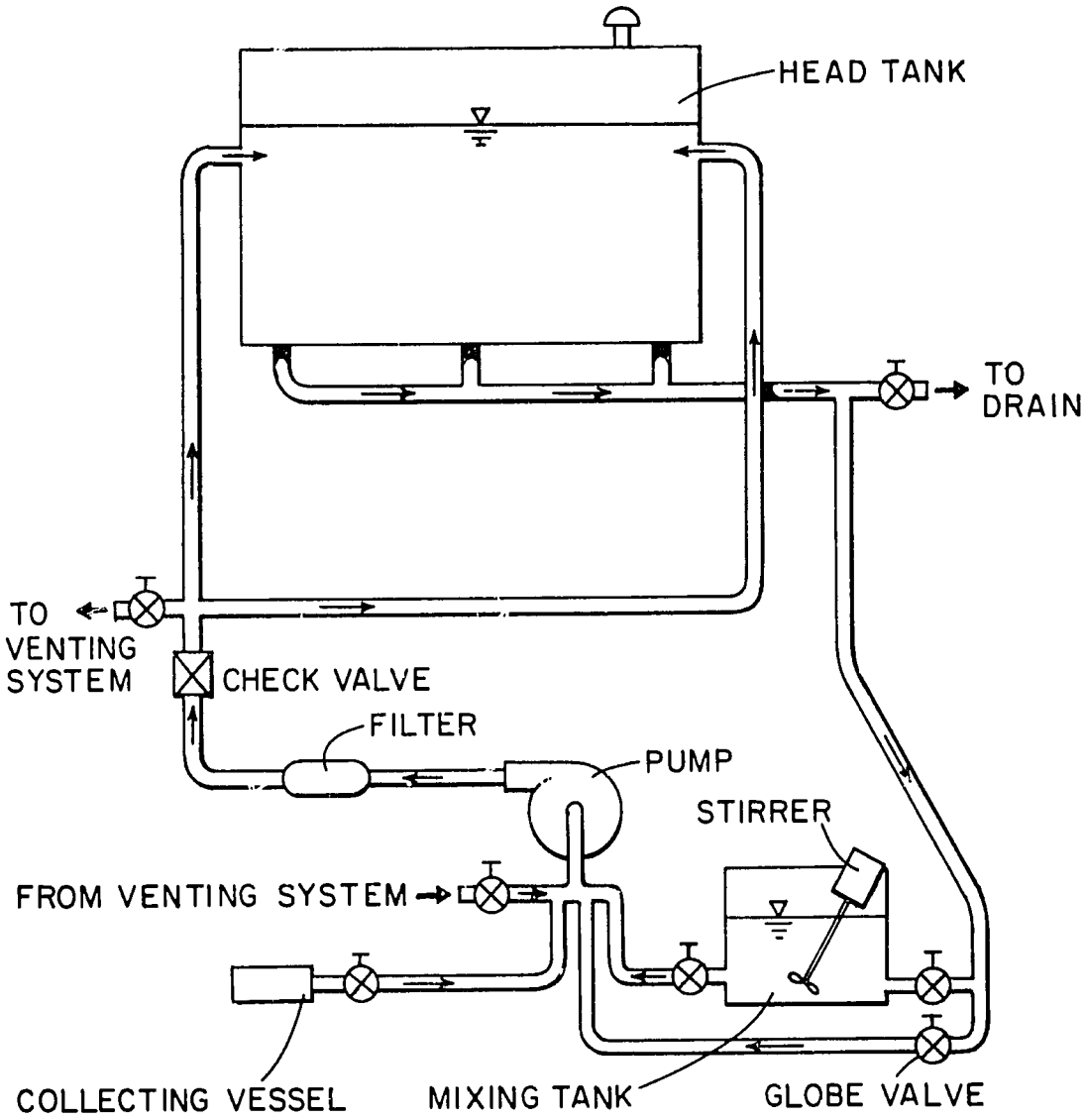

Figure 3.2: Head Tank and Associated Apparatus and Piping

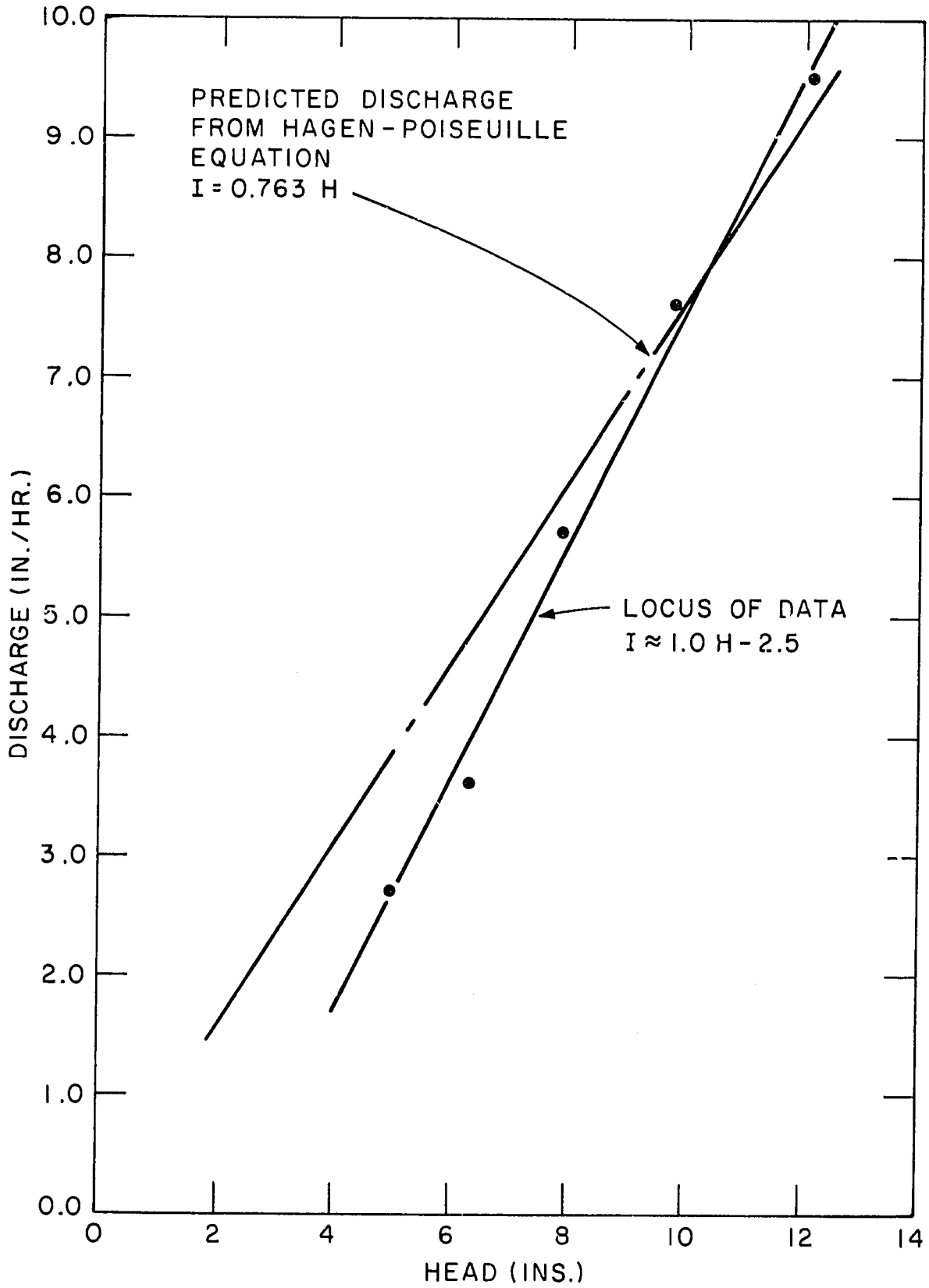

Figure 3.3: Discharge Characteristics of 0.0125" ID Stainless Steel Tubing on 1-Inch Centers, Tubes Forming A Re-entrant Nozzle of 1/16" Length

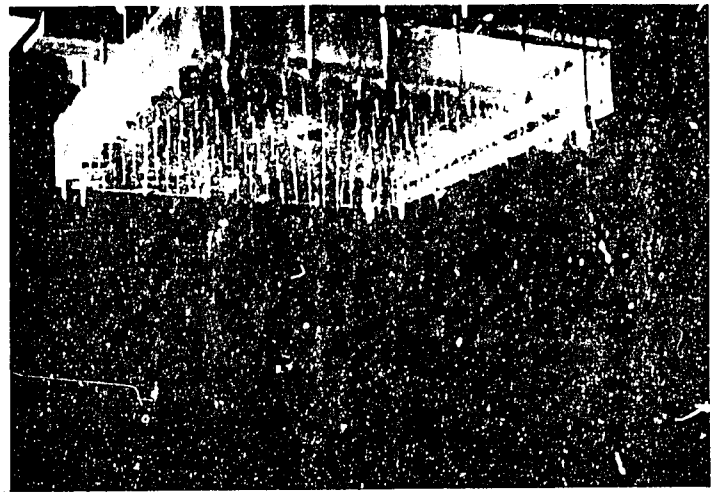

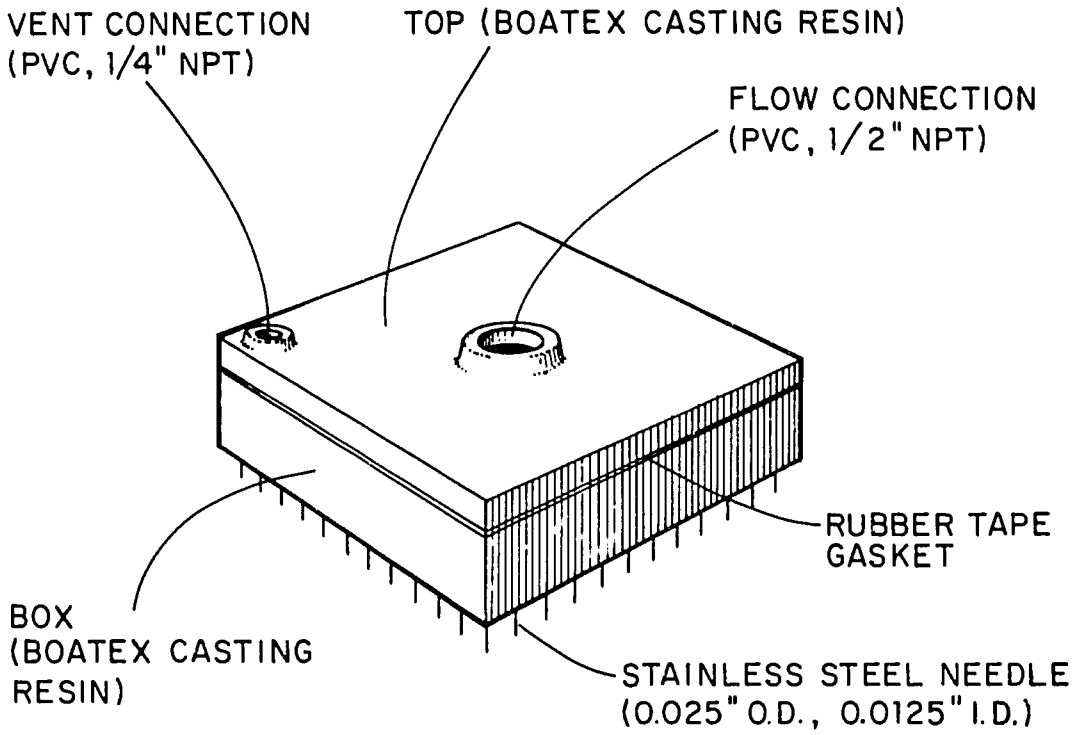

MODULE IS 1 1/2" HIGH AND 12" SQUARE. DRAWING NOT TO SCALE.

Figure 3.4: Module

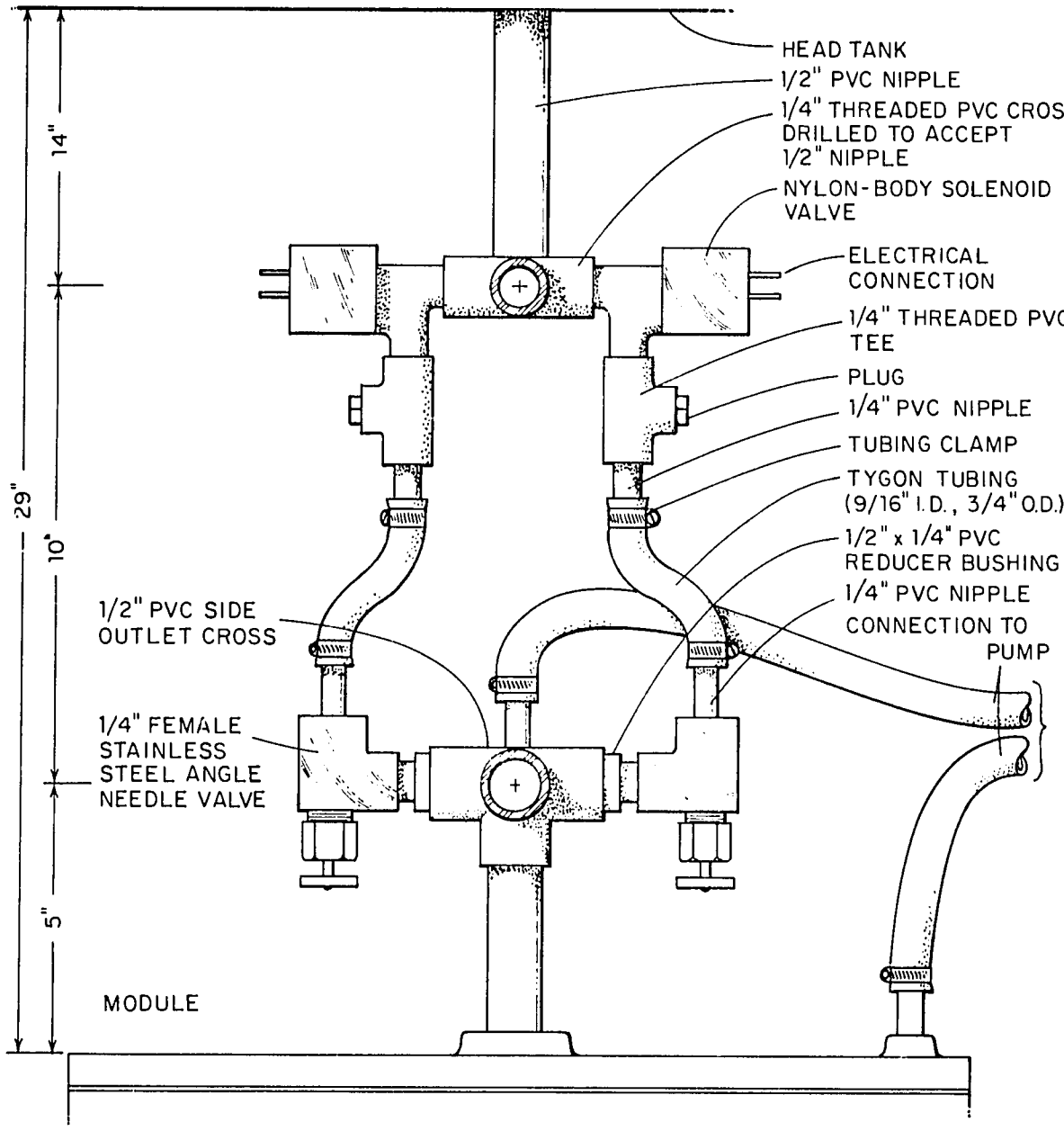

Figure 3.5: Flow Control Arrangement

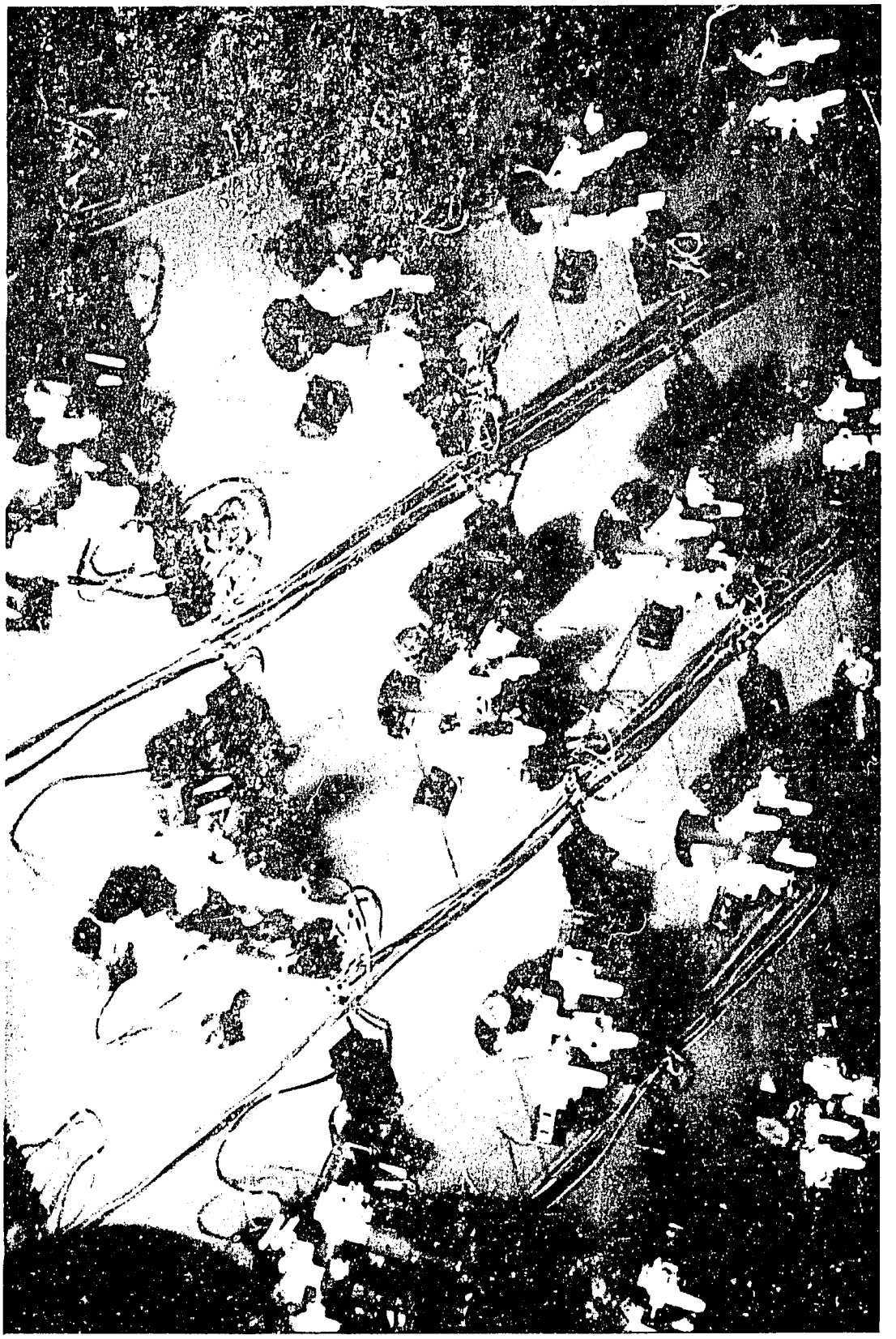

Figure 3.6: View from Beneath Wiring Board Showing Groups of Solenoid Valves

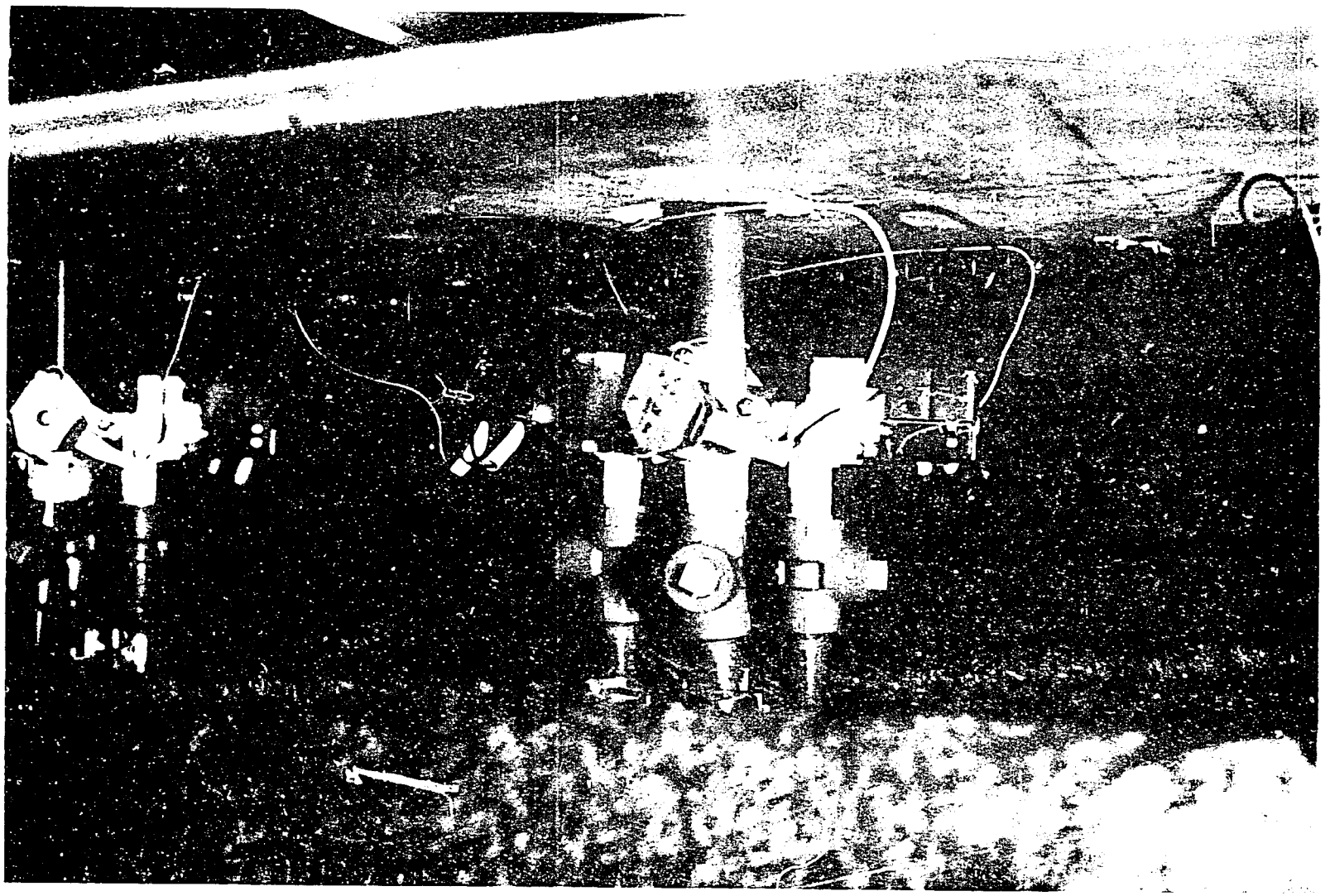

Figure 3.7: A Group of Solenoid Valves and Venting Tees

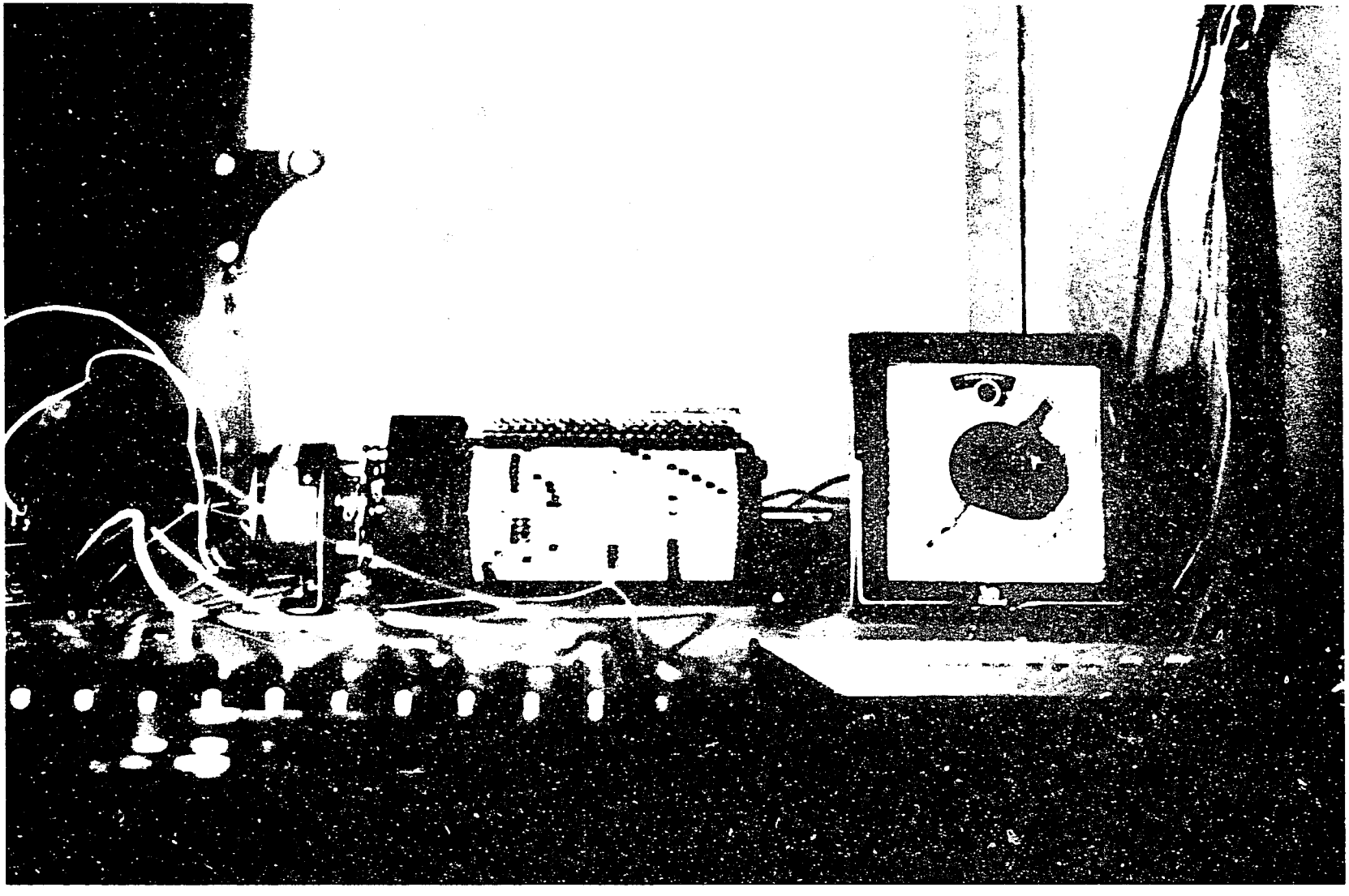

Figure 3.8: Programming Drum Assembly

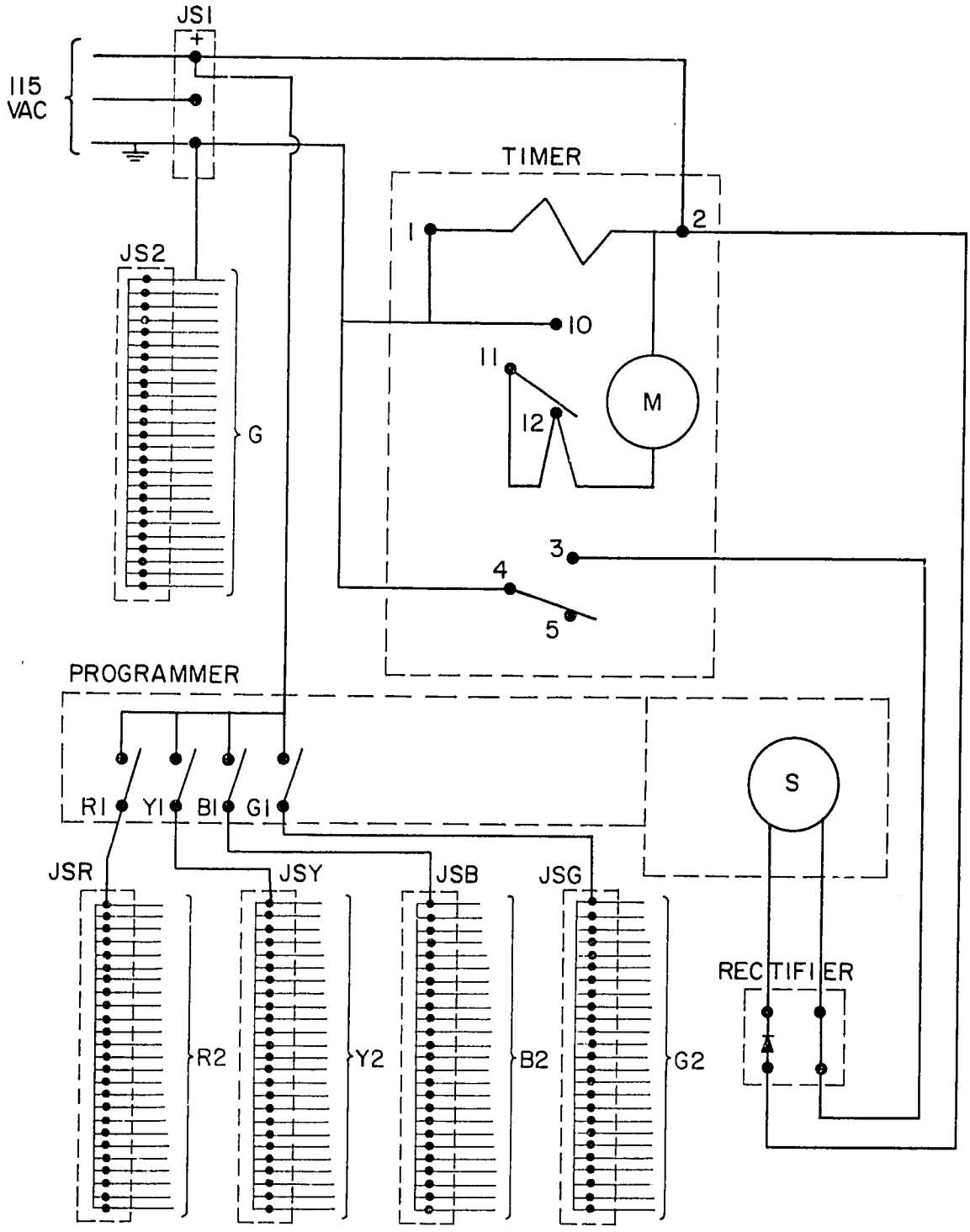

Figure 3.9: Schematic of Electrical System for Sequencing Opening and Closing of Solenoid Valves

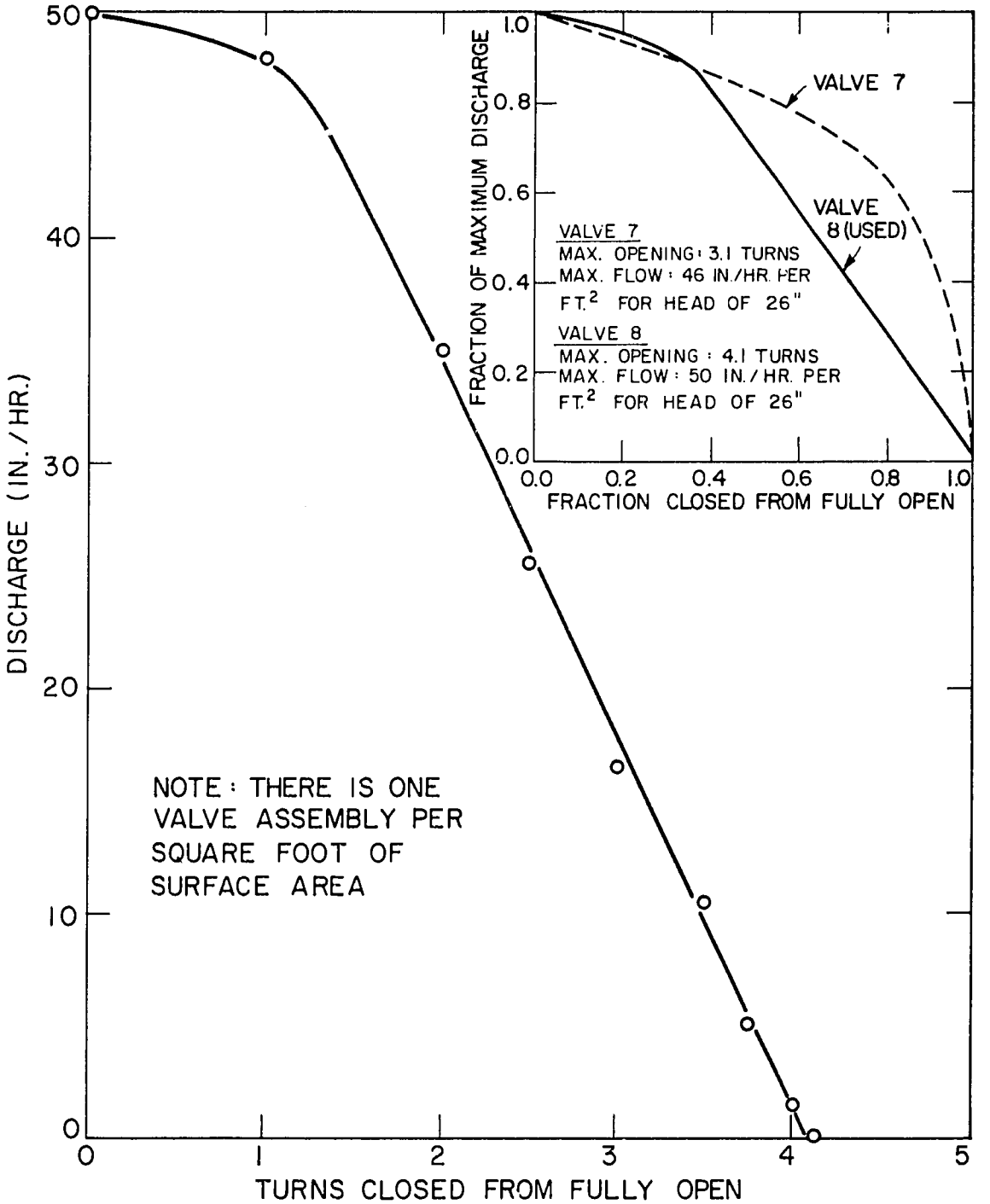

Figure 3.10: Discharge Characteristics of Solenoid Valve and Dragon Angle Needle Valve for Head of Approximately 26 Inches

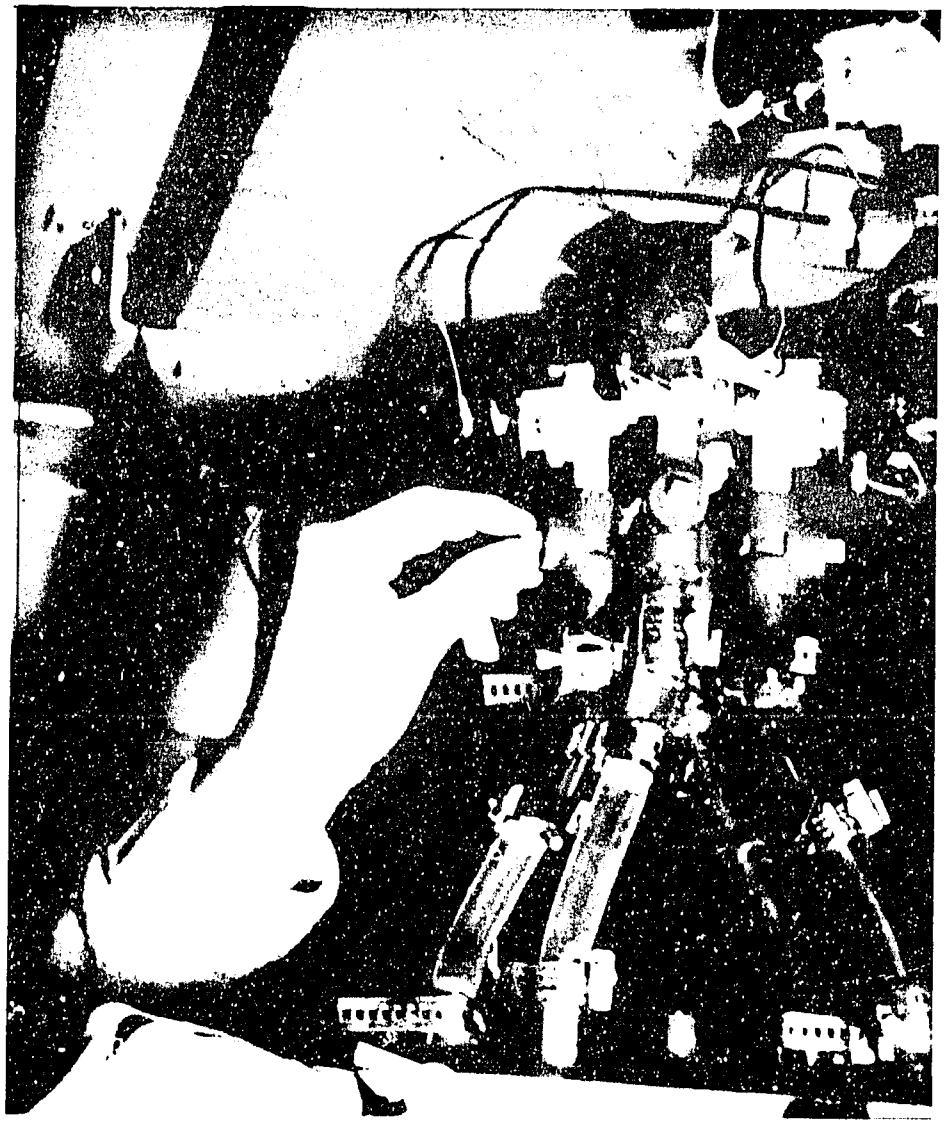

Figure 3.11: Venting of a Module System

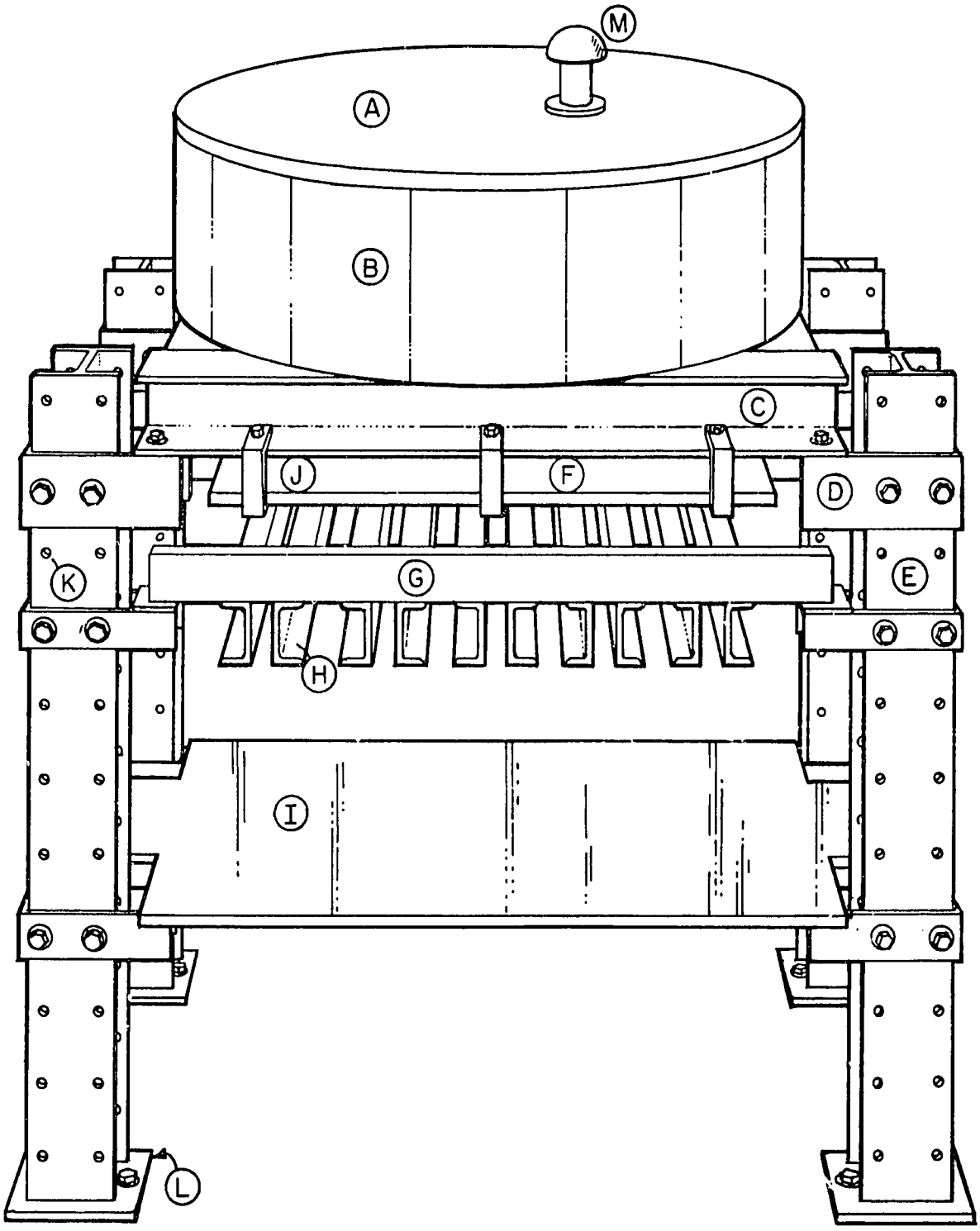

Figure 3.12: Head Tank and Support Frame

4 THE MODEL

4.1 THE BASIN AND STORMS TO BE MODELLED

4.1.1 The Prototype Basin

The Storm Drainage Project of the Johns Hopkins University has for some years been measuring concurrent records of rainfall and runoff for a number of urban basins in the Baltimore area. One such basin is the Johns Hopkins South Parking Lot No. 1 shown in Figure 4.1. This basin has an area of 0.395 acres, a mean slope of 1.71 per cent (approximately 1°) and is surfaced in asphalt. It is enclosed by an asphalt curb. Surface runoff is measured by means of a stage recorder in a calibrated weir-box located in the storm water inlet to which the basin drains. Rainfall records were obtained from a tipping bucket raingage (bucket "volume" = 0.01 inch) located adjacent to the basin. Rainfall and runoff measurements for the storm of September 9, 1960 (9SPL1) are shown in Figure 4.2. The characteristics of this basin are completely in line with those for which the modelling criteria of Grace and Eagleson (1966b) were developed.

The reasons above, as well as the fact that the Hydrologic Systems Group at M. I. T. has already processed a considerable amount of the South Parking Lot No. 1 (SPL1) data for unit hydrographs, lead this investigation to model this basin as a first step in studying the applicability of physical models in the analysis of surface runoff.

4.1.2 Storms

Four storms were selected for initial study. First of all, these storms had a reasonable amount of runoff; secondly, they provided a range in both storm duration and rainfall intensities.

The general features of the rainfall and runoff data for these storms are presented in Table 4.1. The rainfall and runoff history of storm 9SPL1 is presented graphically in Figure 4.2. A detailed history

of the rainfall intensity during each of the four storms is given in Table 4.2.

4.2 THE MODEL PARAMETERS

4.2.1 Introduction

The Johns Hopkins South Parking Lot No. 1 lies alongside a Lot No. 2 whose storm runoff is measured in the same manner as in the case of Lot No. 1. With the prospects of modelling this basin at a later date, it was proposed that models of both lots be built side by side.

4.2.2 The Length Ratio

The length scale of the model basins was made as large as possible without having any part of these basins pass outside the physical limits of the rainfall generator. This fixed the length of the model basins at slightly under five feet, and the resulting model/prototype length ratio was $L_r = 1/70$.

The basins are narrow and elongated in shape, and only a small band of modules is required to cover either model. Only eight of the twenty-five total modules are needed to provide rainfall to the entire area of the model of SPL1.

4.2.3 General Considerations

The variation of the ratio of model/prototype parameters with the average slope chosen for the model of SPL1 is shown graphically in Figure 4.3. This plot uses the similarity criteria of Grace and Eagleson (1966b). The increase in I_r, U_r, and I_r for increasing slope means that t_r decreases. We cannot therefore build a model of large slope in order to obtain larger volumes of water in the model unless the time lags in the rainfall generator are minute and the reaction time of the runoff-measuring equipment is also small. The rainfall generator has been discussed in Chapter 3; the equipment used in the measurement of the runoff from the model basin is described in Chapter 5.

4.2.4 Preliminary Rainfall Generator Tests

Early tests on a single-module rainfall generator showed that time lags between valve opening and a constant outflow of the order of from 1 to 4 seconds were inherent in the system. The longer lags accompanied a change to a very large rainfall intensity, approximately 50 in./hr., whereas the shorter lag was typical of the time required to change from one moderate rainfall intensity to another.

4.2.5 The Time Increment in the Model

Strictly speaking, the rainfall generator should be capable of generating a rainfall history such as is shown in Figure 4.2. That is, it should be capable of changing the generated rainfall intensity instantly from one value to another, and it should be able to maintain the required intensity over the desired pulse length.

If the aim was to reproduce the actual prototype rainfall history, not its simulated counterpart, the requirement outlined above would easily be met since the lag time of 1-4 seconds is only a small fraction of a minute. However, the storm to be generated concerns the model wherein the time increments are measured in terms of a few seconds, a time of the same magnitude as the changeover time. Thus it is apparent that, whatever the model/prototype time ratio, t_r, the system must be dynamically calibrated.

Still, the longer the time increments in the model, or the larger t_r becomes, the smaller will be the effect of the changeover time. The implication of choosing a large t_r to minimize this influence is illustrated in Figure 4.3. The larger t_r becomes, the smaller I_r, U_r, and Y_r become for given L_r. If t_r becomes too great, I_r would be so small that raindrops would collect in small pools, the experience of Chery (1965). It must also be remembered that *very* low model rainfall intensities cannot, in fact, be generated.

On the other hand, as may be seen in Figure 4.3, t_r cannot be made too small, chiefly because of the magnitude of the changeover time mentioned above, an inherent characteristic of the rainfall generator. Another characteristic of the rainfall generator which puts a lower bound on t_r concerns the pulse timer (Chapter 3.4.2), since there is a lower limit on the time between pulses. Furthermore, there is an upper bound on possible model rainfall intensities. In addition, t_r cannot be made so small that accuracy in *measuring* the model outflow hydrograph would be sacrificed.

It appeared from all of the above considerations that some intermediate value of t_r had to be chosen. A time increment of about 2 1/2 seconds in the model appeared to be a good choice. Actually 2.64 seconds was chosen, since, for $t_r = \frac{2.64}{60} = 0.044$, θ_m is a nonfractional value of 7°; see Figure 4.3.

4.2.6 Model/Prototype Parameter Ratios

A time equivalent to 1 minute in the prototype of 2.64 seconds in the model means a time ratio

$$t_r = \frac{2.64}{60} = 0.044 \tag{4.1}$$

From Figure 4.3 and using Equation (4.1), it can be shown that

$$\theta_m = 7^\circ \tag{4.2}$$

$$I_r = 2.3 \tag{4.3}$$

$$Y_r = 0.105 \tag{4.4}$$

$$U_r = 0.33 \tag{4.5}$$

$$c_{f_r} = 7.1 \tag{4.6}$$

With numerical values for the parameters I_r and t_r, it is possible to scale the four prototype storms; see Table 4.2. In addition, since L_m and θ_m are known, it is possible to determine the model topography.

4.3 THE PHYSICAL MODEL

4.3.1 The Model Topography

The adjoining prototype basins were laid out within a grid, and these basins were sectioned at every transverse grid crossing which was fine enough to provide an adequate representation of the topography. A model grid size of 3 inches seemed adequate.

The mean slope for the basins is defined as the drop, D_o, from one end of a basin to the other divided by the trough distance L_o which extends the length of the parking lots, reaching a low point at elevation Z_o at the downstream end of the basin. This slope was 1° for SPL1 and was set at 7° in the model; see Equation (4.2). This fixed D_{o_m}. The model elevations were determined by ensuring for any prototype elevation Z_p, that the corresponding model elevation conformed to

$$\frac{Z_m - Z_{o_m}}{D_{o_m}} = \frac{Z_p - Z_{o_p}}{D_{o_p}} \tag{4.7}$$

This fixed the model basin elevation contours, and thus elevations could be assigned to grid crossings and any intermediate points.

4.3.2 Model Construction Details

The model of the basins was built within a box, 57" long, 36" across, and 12" deep, made of 1/2" plywood and varnished. The arrangement is shown in Figure 4.1. The length and width of the box were large enough in plan so that the model of both basins could be contained therein. The depth was such that all model topography lay below the top of the box. The range in model elevation from the upstream to the downstream end of

TABLE 4.1

Basic Features of Selected Storms Over the
Johns Hopkins South Parking Lot Number 1

STORM	RAINFALL				RUNOFF				
	Total Rainfall (Inches)	Duration of Storm (Minutes)	Maximum Intensity (In./Hr.)	Time of Maximum Intensity (Minutes)	Total Runoff (In.)	Runoff Began at (Min.)	Time to Peak (Min.)	Peak Flow (In./Hr. or CFS/Ac.)	Duration of Runoff (Min.)
8SPL1	0.52	36	2.58	13	0.40	3.4	11.7	1.54	55
9SPL1	0.62	31	3.60	4	0.46	2.5	5.8	2.20	34
13SPL1	1.11	24	7.02	10	0.93	3.7	11.4	5.75	40
18SPL1	0.28	13	3.06	9	0.25	4.0	12.0	2.48	27

the model basin is about 8" for SPL1, and, at the downstream end of this model basin, the exit point of flow from the basin is set at an elevation 1" above the base of the box. The exit consists of an opening, whose lower surface conforms to the model topography, through the end of the plywood box to a short length of plastic tubing set at an angle of 45° to the end of the box.

Templates were cut in 1/4" plywood for each transverse grid line in the model. These templates were varnished and then slid into place in slots positioned at 3-inch intervals along the enclosing box. The topography between templates was filled in using a thin layer of Masco cement and plastic latex overlaying a depth of a very light concrete aggregate Vermiculite. The cement surface was made plane between pairs of templates.

4.3.3 The Model Surface

Early tests indicated that a plastic surface such as lucite would not be suitable for the model surface since there was a very great tendency for the water drops to fall on the surface and remain in small pools. Chery (1965) had a similar experience with the surface of his model which was of a plastic resin.

Mamisao (1952) apparently had better results using a model surface of mortar, and it was confirmed by tests that drops which fell on the plastic latex-cement surface used for the topping of the model did not form small pools but spread out and flowed quite readily. Thus the plastic latex-cement surface was used as the working model surface. For two different sets of tests, the model surface was finished differently. Initially the surface was rough-floated, to give a *relatively* rough terrain, and then the surface was made smooth using a paint brush on the surface as it was setting up.

TABLE 4.2

Time in Proto-Type (Min.)	Time in Model (Sec)	8SPL1 Prototype Rainfall Intensity (In./Hr. or CFS/Ac)	8SPL1 Model Rainfall Intensity (In./Hr.)	9SPL1 Prototype Rainfall Intensity (In./Hr. or CFS/Ac)	9SPL1 Model Rainfall Intensity (In./Hr.)	13SPL1 Prototype Rainfall Intensity (In./Hr.) or CFS/Ac)	13SPL1 Model Rainfall Intensity (In./Hr.)	18SPL1 Prototype Rainfall Intensity (In./Hr. or (CFS/Ac)	18SPL1 Model Rainfall Intensity (In./Hr.)
1	2.64	0.54	2.64	2.40	5.52	1.02	2.34	1.08	2.49
2	5.28	0.42	0.97	3.00	6.90	1.50	3.45	0.96	2.21
3	7.92	0.54	1.24	2.40	5.52	1.38	3.17	0.90	2.17
4	10.56	1.56	3.59	3.60	8.28	1.62	3.73	0.90	2.17
5	13.20	2.10	4.83	3.00	6.90	3.36	7.73	0.54	1.24
6	15.84	1.38	3.17	2.40	5.52	3.90	8.97	0.30	0.69
7	18.48	1.68	3.86	1.20	2.76	1.86	4.28	0.72	1.65
8	21.12	1.98	4.55	1.80	4.14	2.16	4.97	1.74	4.00
9	23.76	1.74	4.00	1.80	4.14	5.58	12.82	3.06	7.04
10	26.40	1.74	4.00	1.20	2.76	7.02	16.15	2.88	6.63
11	29.04	1.44	3.31	1.20	2.76	6.54	15.03	2.34	5.39
12	31.68	1.62	3.73	2.40	5.52	3.36	7.73	1.20	2.76
13	34.32	2.58	5.93	2.40	5.52	1.56	3.59	0.18	0.41
14	36.96	1.20	2.76	1.80	4.14	3.18	7.31		
15	39.60	0.66	1.52	1.80	4.14	4.02	9.25		
16	42.24	0.42	0.97	1.20	2.76	4.02	9.25		
17	44.88	0.66	1.52	0.30	0.69	3.00	6.90		
18	47.52	0.18	0.41	0.30	0.69	2.94	6.76		
19	50.16	0.24	0.55	0.30	0.69	3.06	7.04		
20	52.80	0.18	0.41	0.30	0.69	2.64	6.07		
21	55.44	0.06	0.14	0.60	1.38	1.26	2.90		
22	58.08	0.06	0.14	0.30	0.69	1.14	2.62		

TABLE 4.2 (continued)

23	60.72	0.06	0.14	0.30	0.69	0.36	0.83
24	63.36	0.06	0.14	0.30	0.69	0.12	0.28
25	66.00	0.06	0.14	0.30	0.69		
26	68.64	0.06	0.14	0.12	0.28		
27	71.28	0.06	0.14	0.06	0.14		
28	73.92	0.06	0.14	0.12	0.28		
29	76.56	0.18	0.41	0.12	0.28		
30	79.20	1.32	3.03	0.06	0.14		
31	81.84	1.74	4.00	0.12	0.28		
32	84.48	1.08	2.48				
33	87.12	0.90	2.07				
34	89.76	1.44	3.31				
35	92.40	0.96	2.21				
36	95.04	0.24	0.55				

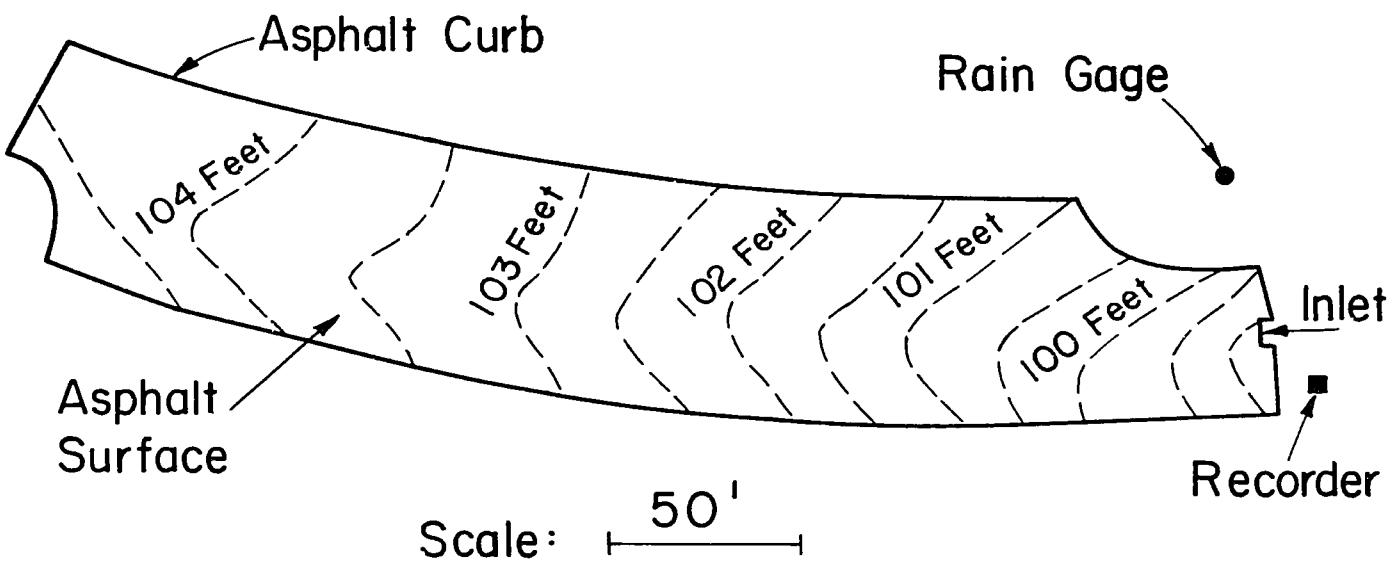

Figure 4.1: The Johns Hopkins South Parking Lot No. 1 (Area = 0.395 Acres, Average Slope = 1.71%)

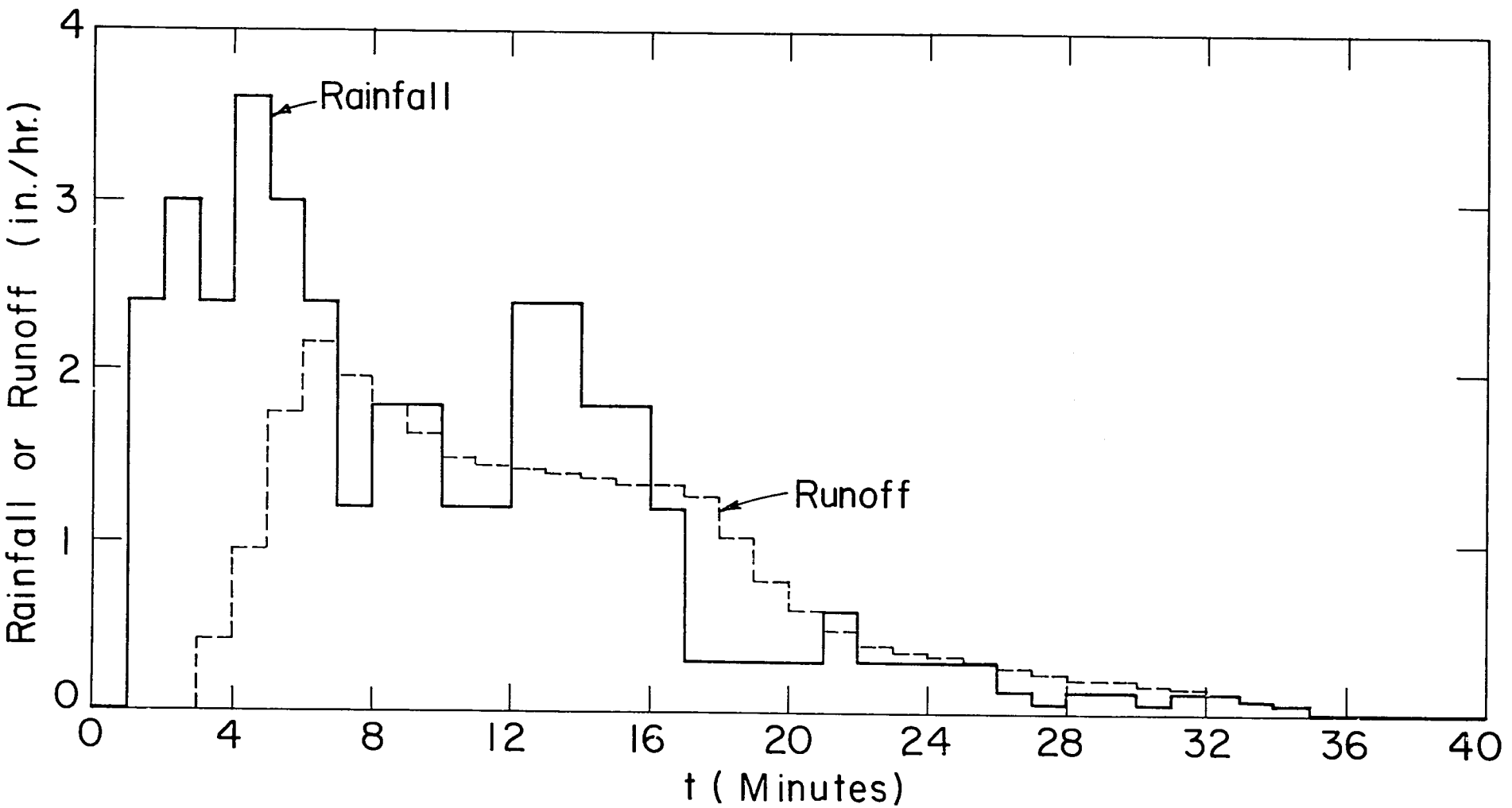

Figure 4.2: Time History of Rainfall and Runoff for Storm 9SPL1, September 9, 1960, Over the Johns Hopkins South Parking Lot No. 1

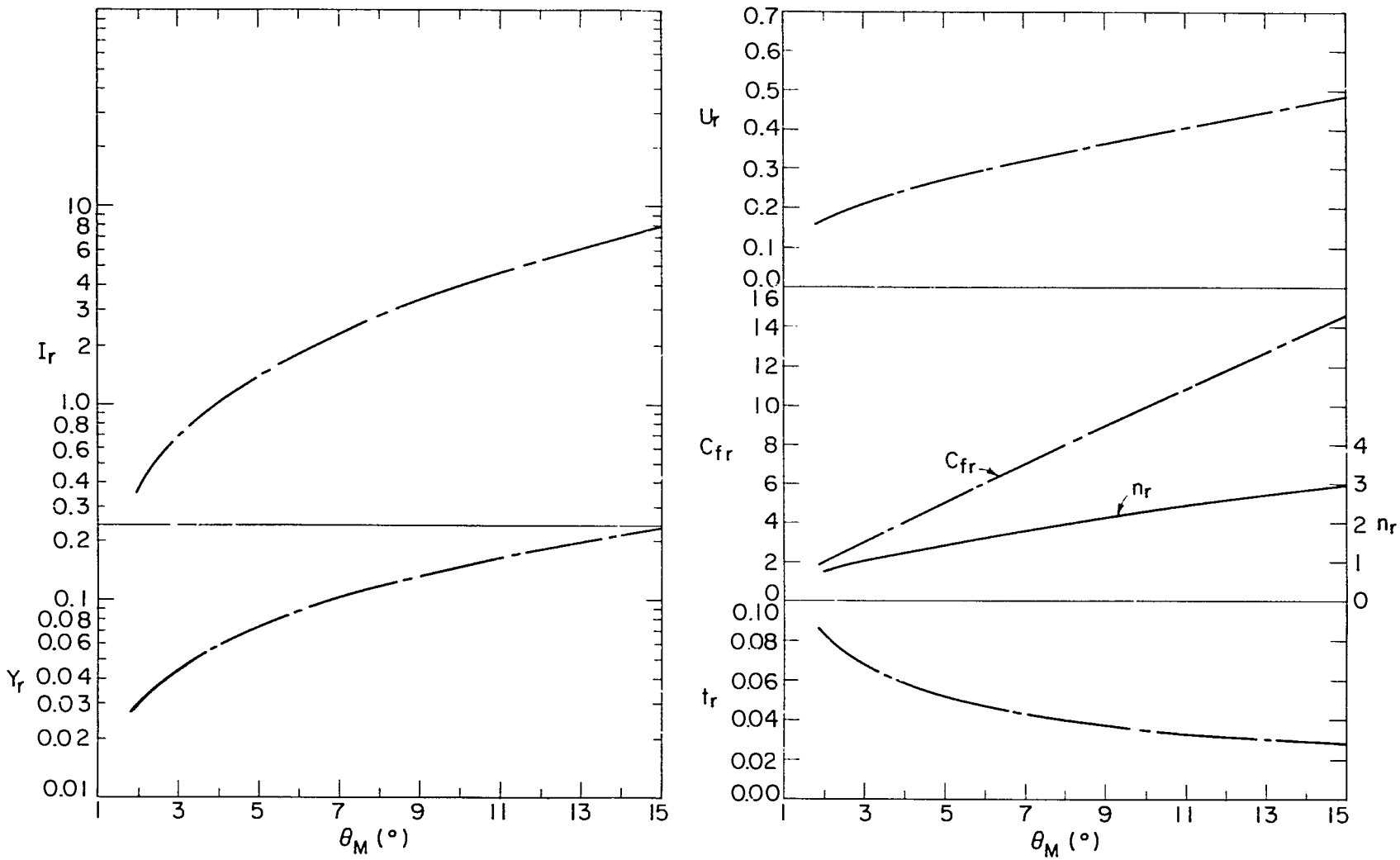

Figure 4.3: Model/Prototype Variable Ratios to Assure Similitude for the Rainfall-Overland Flow Process Over Johns Hopkins South Parking Lot No. 1 (L_r = 1/70)

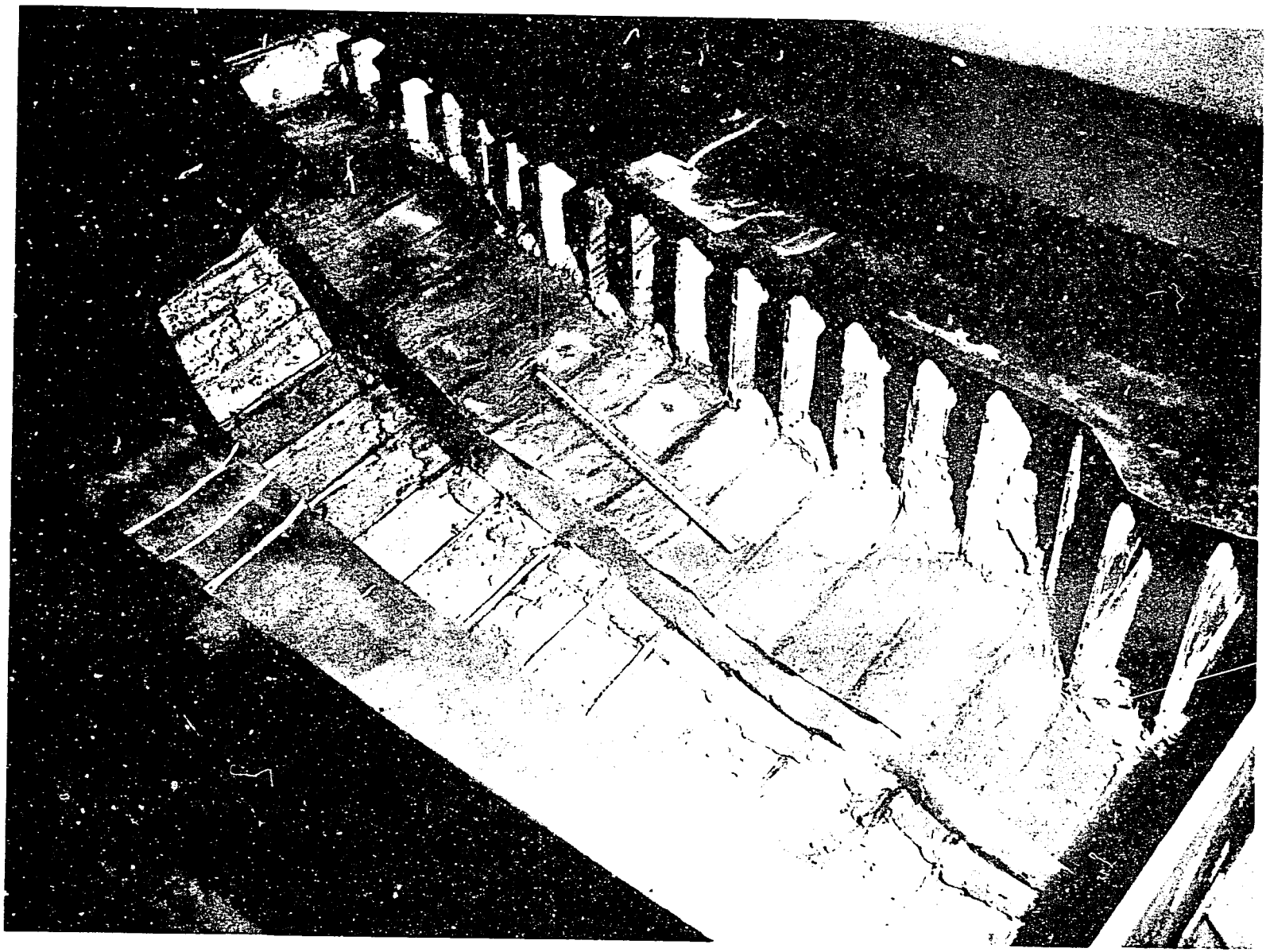

Figure 4.4: Photograph of Model of the Johns Hopkins South Parking Lots 1 (top) and 2

5 MEASURING THE MODEL RUNOFF HYDROGRAPH

5.1 VOLUMETRIC METHOD

One method of measuring the rate of runoff from the model basin is to collect the water in a vessel and record the rate of change of depth in the vessel. The depth measurements could be done, for instance, by means of a resistance-type gage or a pressure transducer, and a continuous record of the depth readings could be effected by feeding the signal to a suitable recorder. Obtaining the actual flow history from the record would be effected by differentiating the continuous depth reading. This is a method in which large errors can be introduced. Apparently the most accurate way of obtaining the flow history would be to record the depth record on magnetic tape and then use an analog-to-digital converter to put the record into digital form. Various smoothing techniques would then be employed before actual digital differentiation of the depth readings was carried out [Kolpak (1965)].

The size of the collecting vessel and other aspects of the measuring equipment should be determined on the basis of the actual characteristics of the storms to be modelled and of the various scaling ratios. Since the model basins representing Johns Hopkins Parking Lots 1 and 2 are small and since the storms to be simulated are not outstandingly severe, the outflows will not be as great as in many other cases. Thus it is reasonable to design the measuring equipment to have a lower threshold determined by the modelling criteria and actual magnitudes of quantities associated with the Johns Hopkins basins. These basins are then used in the following analysis.

The model/prototype discharge ratio is

$$Q_r = U_r L_r Y_r \tag{5.1}$$

If we choose as a representative model slope angle 8.2°, we find that

$$Q_r \approx 0.0006 \tag{5.2}$$

through use of Figure 4.3. For the four storms selected, a reasonable estimate of the maximum prototype discharge is 1 cfs, which then corresponds to approximately 6×10^{-4} cfs in the model. For any storm the flow measuring system in the model should be capable of accurately representing the outflow hydrograph over as much of the range as possible. Suppose that we specify that the measuring system must respond to a minimum of $p = 1\%$ of the maximum flow and its response time must be equal to or less than the length of time increment chosen for constant rainfall amounts, Δt.

Let the resolution of the flow depth device be r feet. Then the equation we must solve in order to find the required cross-sectional area A feet^2 of the receiving vessel is

$$rA = 0.01 \times (6 \times 10^{-4}) \times \Delta t \tag{5.3}$$

For $\theta_m = 8.2°$, we find $\Delta t = 2.4$ seconds. If $r \approx 1$ millimeter[1] (3.3×10^{-3} feet, 1.4×10^{-3} psi) we find that A solves to be approximately 0.5 square inches, an extremely small figure. Even for $p = 10\%$, the size A is hardly more realizable physically, and it should be noted that a resolution of 1 millimeter is very very fine. If the area was, in fact, 0.5 square inches, the height of vessel would be about 10 feet. It is more than doubtful that a depth-sensing device capable of operating over a range of 10 feet would have a resolution of 1 millimeter.

---

[1]This figure is reasonable for a resistance-type depth-measuring gauge: see Dean and Ursell (1959).

Another consideration regarding an outflow-measuring device not mentioned above is that the cross-sectional size of the receiving vessel should be sufficient to allow the outflow to enter it for all time. That is, if the vessel is located at an overfall, the trajectory of the overflow should always be intercepted by the vessel. This in itself imposes a lower limit on the size of the vessel opening. The size of the vessel found earlier would certainly not satisfy this requirement.

Also, the vessel should not be so deep that the time of fall has a disproportionate effect on the depth-time history within the vessel. If we say, for instance, that the time of fall should never be more than 10% of the time increment, Δt, we have a maximum depth of vessel. Of course the time history of the depth of the water in the vessel could be approximately corrected *a posteriori* for this effect. For $\Delta t = 2.4$ seconds, the maximum height of fall is about 1 foot.

5.2 WEIGHT METHOD

The runoff hydrograph can also be obtained by differentiating the cumulative weight curve of the collected runoff from the model basin. The problems and techniques associated with this procedure are similar to those described for the volumetric method of arriving at the runoff hydrograph.

The figures used in the discussion concerning measuring the volume of outflow from the model basin can be extended to give an indication of the resolution which would be required by a weighing device used to obtain the hydrograph. This resolution should be about 1×10^{-3} lbs., a figure which is possible with tiny load cell units with small force ranges, for example, 0-3 lbs., which would be appropriate for the Johns Hopkins parking lots simulation.

In a weighing-type of arrangement, however, there is the effect on the measured weight of the rate of loss of vertical momentum by the jet entering the vessel. This force is

$$F = \rho Q w \approx 16 Q \sqrt{s} \tag{5.4}$$

where ρ is the density of water, lbs. $sec^2/ft.^4$

Q is the discharge, cfs

w is the vertical velocity, fps

and s is the height of fall of the jet, feet

It is important that this force be only a small proportion of the discharge we are measuring at any time. Let us say that the force F should be equal to or less than a fraction p of the weight change within the vessel in time Δt.

$$\text{Then} \quad F \leq p\gamma Q \Delta t, \tag{5.5}$$

if we assume Q approximately constant over Δt. Combining Equations (5.4) and (5.5), we want

$$16\ Q \sqrt{s} \leq p\gamma Q \Delta t \tag{5.6}$$

That is,

$$s \leq 100\ p^2 \tag{5.7}$$

for $\Delta t = 2.4$ seconds.

If, for example, we want $p = 0.1$, we should have a height of fall less than 1 foot. A physical limit would appear to be approximately $p = 0.05$, where s would have to be equal to or less than about 3 inches. The optimum vessel for this operation would then appear to be a type of flat dish.

5.3 IMPACT METHOD

In this case the hydrograph is measured directly by allowing the runoff to impinge upon a plate instrumented to give the force acting on the plate. Equation (5.4) with the introduction of a calibration constant K(F, s) can be rearranged to yield

$$Q = K(F, s) \frac{F}{\sqrt{s}} \tag{5.8}$$

There are thus no problems with differentiating as in the previous two cases; however, the force is very small, as shown in the previous section, for reasonable heights of fall of the jet.

5.4 ANOTHER POSSIBILITY

There is a way to get around the necessity of differentiating a cumulative runoff signal which is strictly applicable only if the basin is a linear system. This involves working with basin step responses rather than with unit impulse responses. Once the step response of the model basin is known by using the measured cumulative outflow and the step function rainfall input, the linearized model runoff can be reconstructed through use of the convolution integral [Eagleson et al. (1965)].

5.5 THE METHOD ADOPTED AND ASSOCIATED EQUIPMENT

5.5.1 Introduction

The weight method of measuring the model runoff hydrograph was adopted. A photograph of the components used in accomplishing this is presented as Figure 5.1. The method employed is relatively straightforward; water falls into the container at the end of the beam and the force reaction, magnified by the lever, is realized through the load cell

whose output signal is recorded. The lever idea was used because the movable fulcrum allows one sensitive load cell to be used for measuring a reasonable range of weights.

5.5.2 Load Cell

The load cell is a Magtrol Part No. 4790 which has a force range of from -3 to +3 pounds and a minimum output of 0.15 volts per pound for 32 milliamps constant current, a power supply voltage of approximately 14 volts and a 5000-ohm load.

5.5.3 Beam

The beam is an aluminum 1" x 1" channel section with a 1/8" thickness, and is 3 feet long. Holes 9/16" in diameter are drilled at two-inch spacing throughout the length of the beam so that the pivot point for the lever can be located at a wide number of points.

5.5.4 Pivot Assembly

Two high precision, 15 millimeter New Departure ball bearings were press fit into drilled holes in a solid block of aluminum to form the pivot assembly. The bearings can take a small amount of thrust.

5.5.5 Receptacle for Runoff

The container which receives the runoff should have a capacity sufficient to accept the largest volume of model runoff from the four simulated Johns Hopkins storms. It should also be shallow, following from the discussion of Chapter 5.2, and light.

It can be shown that the expected model runoff for a storm of G inches of rainfall over SPL1 is

$$\left.\begin{aligned} V &= 0.03\ G\ \text{ft.}^3 \\ \text{or} \qquad W &= 1.82\ G\ \text{lbs.} \end{aligned}\right\} \qquad (5.9)$$

Since the maximum prototype runoff is 0.93 inches, for storm 13SPL1, the container should contain about 2 lbs. of water. A container which fulfills all three requirements was found in a flat 5" x 7" x 1" photographic developing tray which was then fixed to a small piece of angle with neoprene cement. The angle is bolted to the end of the weighing beam, and is shown in position in Figure 5.1

5.6 TESTS ON WEIGHING DEVICE

Static tests were run on the weighing mechanism by adding calibrated weights to the system for various positions of the fulcrum and recording the output signal on a Sanborn recorder. The gage response is absolutely linear; see Figure 6.6.

Dynamic tests were also run. These tests involved several different methods of adding water to the receiving container. There was some noise on the received signal; however, the signal-to-noise ratio remained large, typically greater than 30:1. For a very sudden, heavy input to the model basin and a high sensitivity setting on the Sanborn, the signal-to-noise ratio still never fell below 5:1, and this extreme was realized only once in the experiments reported in Chapter 6. The usual minimum signal-to-noise ratio early in such tests was 16:1. The presence of this noise suggests problems concerning the differentiation of a record of cumulative weight to arrive at the runoff hydrograph from the model basin. A method for getting around this problem in linear systems was suggested in Chapter 5.4, but it would appear that the desired comparison of the runoff characteristics of a prototype and its model basin can perhaps best be realized by comparing the cumulative hydrographs.

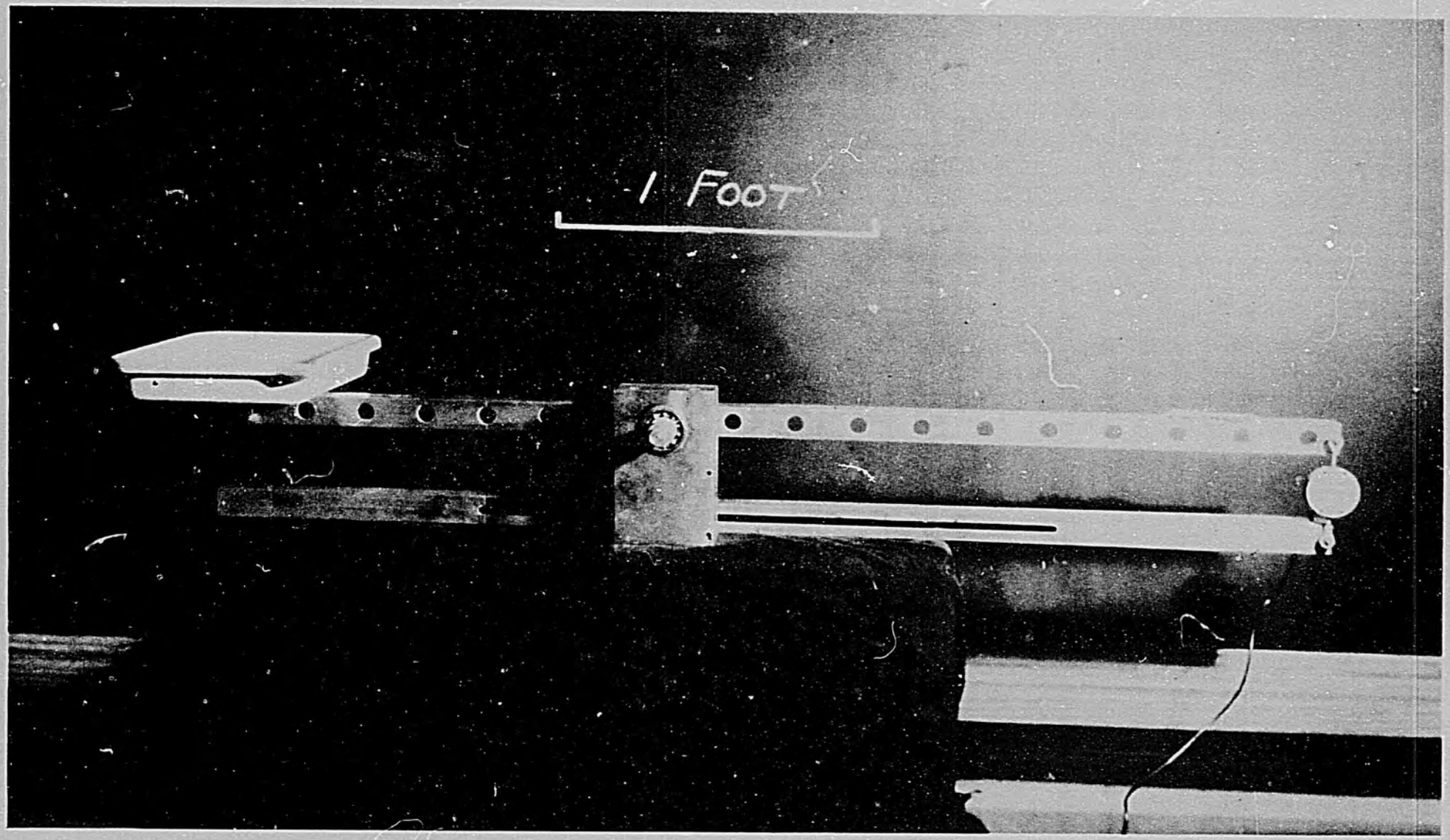

Figure 5.1: Photograph of Weighing Beam-Load Cell Arrangement

6 PHYSICAL MODEL EXPERIMENTS

6.1 PRELIMINARY TESTING

Testing of the rain generator indicated the magnitude of the time lag between the opening of a line and the establishment of full flow on the one hand and between the closing of a line and the complete cessation of rainfall on the other. On the average, there was a lag of approximately 3 seconds for full flow to be established when starting from a zero-flow condition. The lags involved in *increasing* the rainfall intensity from one value to another were less than this figure, namely, about 1 second. The lags involved in *decreasing* the rainfall intensity were longer, and varied for the various changes. A lag of from 10 to 15 seconds was involved in reaching zero rainfall intensity after the closing of all flow control lines.

The time lags involved in increasing the rainfall intensity are of the same order of magnitude as the length of the time increment chosen for the model, namely 2.64 seconds It was relatively easy to make realistic allowance for these lags in this instance. For example, the beginning of a storm is normally marked more by a gradual increase in rainfall intensity with time than by the sudden appearance of a uniform intensity of rainfall for the first minute. Thus, it was felt that as long as the correct total depth of an initial pulse was realized, the fact that the rainfall intensity was not constant during this time was not critical. The correct total depth can be obtained by calling for a larger steady state flow to allow for the gradually increasing flow rate through the module. The proper steady state flow for such a correction can be determined exactly only through a dynamic calibration and the necessary instruments for the latter were not available. Consequently, the flows were selected from the steady state calibrations by assuming a linear variation of flow rate over an estimated time lag in such a way that the total volume delivered over the increment was the desired amount.

The longer lags for decreasing rainfall intensities required special considerations. Tests were run to try and isolate the cause of the dripping. In particular, these tests probed the possibility of air entering the system, but it was established that this was not the cause. The conclusion arrived at was that the contraction of the tygon lines and actual module after the pressures in these units were reduced at the end of a run caused the release of an additional quantity of liquid through the tubes and required an estimated undersetting of the steady state discharges.

The shut-off lag did not contribute only in a negative way, however, since it permitted the generation of low intensity rainfall not obtainable under steady state conditions. Since only 15 discrete steady state flows can be obtained from the module with four flow control lines, this fact effectively increases the number of settings which can be realized. Although the sequence of solenoid valve operation was set to give the required simulated storms, the only real measure of the overall accuracy of these settings lies in comparing the total runoff in the model to the required storm depth. Since essentially all of the rainfall applied to the wetted model surface would appear to find its way to the exit point from the basin, the overall validity of the simulation can be appraised as shown in Table 6.1. In the full storms, the total model rainfall depths should be the same as the depths of total rainfall in the prototype. The table shows that this is approximately achieved, the maximum difference being 10% for the low-intensity storm 18 SPL1. The desired rainfall depth in the reduced storms was the depth of runoff in the prototype, and a comparison of depths for these storms indicates a maximum error of 5% in storms 8 and 13.

6.2 GENERAL DESCRIPTION OF EXPERIMENTS

Three sets of experiments were run for the four selected storms. The first set of experiments consisted of applying to the "rough" model

TABLE 6.1

Comparison between Gross Characteristics of Model and Prototype Storms

Storm	Total Prototype Storm Rainfall Depth (inches)	Average Total Depth of Rainfall in Simulated Full Storms (inches)	Total Prototype Storm Runoff Depth (inches)	Average Total Depth of Runoff in Simulated Reduced Storms (inches)
8SPL1	0.52	0.54	0.40	0.38
9SPL1	0.62	0.57	0.46	0.45
13SPL1	1.11	1.11	0.93	0.88
18SPL1	0.28	0.31	0.25	0.26

surface[1] the four full simulated storms given in Table 4.2. The second set of experiments made use of the same model surface, but attempted to account for prototype losses by reducing the storm intensities within each of the four storms uniformly such that the total rainfall depth when scaled to the prototype was equal to the prototype runoff depth. The third set of experiments utilized the "smooth" model surface, and the full storms were again applied to the basin. During the experiments several complete runs were carried out for each situation.

The experiments made use of all of the components described in previous chapters and in addition, a Sanborn recorder was employed to obtain a continuous chart record of the electrical output from the load cell.

---

[1]Chapter 4.3.3

The time origin in the experiments was established visually as the instant when the first drops of a storm struck the model surface. This was normally at a time of about 1.8 seconds following the initial opening of any solenoid valve, a time to be reckoned since it amounts to 0.7 minutes when applied to the prototype. No correction in the total time was made for the time of passage of the flow from the exit point of the model basin to the pan on the weighing balance, since this lag was minute. It was estimated to be about 0.2 seconds by observing the motion of small, colored,neutrally-buoyant plastic particles in the runoff flow.

It was found in preliminary tests that the runoff from an initially dry model surface was not reproducible and was inconsistent with expected prototype behavior. Normally some time was required to achieve any runoff at the exit since the plastic-latex cement surface absorbed some of the rainfall. This more or less duplicates the findings of Chery (1965). All final tests were run using an initially wet model surface.

6.3 MODEL STORM DATA

6.3.1 Full Storms

The data for the full storms, as applied to the rough and smooth surfaces, are presented in Figures 6.1 and 6.2, respectively. The lines drawn are the approximate best fits to the data points, and a comparison between these two sets of lines is presented in Figure 6.3. It may be seen in this plot that the cumulative hydrograph for the smooth surface apparently precedes that for the rough surface in storms 8, 9, and 18, but lags behind it somewhat for storm 13. The latter fact, plus the observation that the spread between the smooth and rough curves is less than the spread of the data, led to the conclusion that the decrease in roughness from the rough to the smooth surface did not have a clear-cut effect on the shape and timing of the cumulative hydrograph for the same storms.

Estimates of Manning's n for the two surfaces are [Chow (1959), p. 111] 0.012 for the smooth surface and 0.018 for the rougher surface. If the model flow is turbulent, then Manning's n should provide a valid estimate of c_f as shown in Equation (6.5). The fact that the change in roughness caused no outstanding alteration in the cumulative runoff hydrograph would appear to indicate possibly that measuring errors masked true differences (Section 6.4.2), but probably that the flow in the model is laminar and/or that the friction term on the right-hand side of Equation (6.7) is small with respect to the gravitational term. The insertion of representative numerical magnitudes of the various variables in these terms shows that they are typically of equal order of magnitude, so it would appear that the flow in the model is *laminar* despite the impingement of drops on the moving water surface.

The data from the rough and smooth tests were then combined in one sample, and a representative locus for all of these data was obtained by averaging all experimental runs at the same times. The resulting average data are presented in Figure 6.4 in comparison with the cumulative hydrograph measured for the same storm in the actual prototype.

Approximately one half of the experimental runs carried out for each storm (see Figures 6.1 and 6.2) were recorded on the Sanborn recorder at a relatively high sensitivity setting so that the early portions of the cumulative hydrograph were more sharply defined. The magnitude and timing of the peak discharges in the model were then obtained from such runs.

The point of the peak discharge was obtained from the charts by graphically locating thereon the point of maximum slope of the cumulative model runoff hydrograph. The various values for the peak discharge and the time to peak obtained in this way for the various storms are presented

TABLE 6.2

Peak Discharge in Prototype as Predicted by Model Tests (inch/hour)

Storm	Smooth Surface 1	Smooth Surface 2	Smooth Surface 3	Rough Surface	Average
8SPL1	1.79	1.80		1.83	1.80
9SPL1	1.55	1.79	1.59	1.70	1.66
13SPL1	4.85	4.33		5.58	4.92
18SPL1	2.16	2.15			2.15

TABLE 6.3

Time of Peak Discharge in Prototype as Predicted by Model Tests (minutes)

Storm	Smooth Surface 1	Smooth Surface 2	Smooth Surface 3	Rough Surface	Average
8SPL1	13.7	14.5		14.8	14.3
9SPL1	5.9	5.0	5.3	5.6	5.4
13SPL1	11.8	12.2		11.7	11.9
18SPL1	10.3	10.8			10.5

TABLE 6.4

Comparison between Actual Prototype and Model-Predicted Magnitude and Timing of Peak Discharge

STORM	PROTOTYPE		MODEL		PER CENT DIFFERENCE [(PROTOTYPE-MODEL)/PROTOTYPE]	
	Q_{MAX} (in/hr)	P_R (min)	Q_{MAX} (in/hr)	P_R (min)	Q_{MAX}(%)	P_R(%)
8SPL1	1.54	11.7	1.80	14.3	-16.9	-22.2
9SPL1	2.20	5.8	1.66	5.4	+24.5	+6.9
13SPL1	5.75	11.4	4.92	11.9	+14.4	+4.4
18SPL1	2.48	12.0	2.15	10.5	+13.3	+8.0
AVERAGE					+8.8	-0.7

in Tables 6.2 and 6.3, respectively, and the average values of these quantities are compared to their actual prototype counterparts in Table 6.4.

6.3.2 Reduced Storms

Average data for the cumulative runoff hydrograph resulting from the reduced storms are compared to the corresponding cumulative hydrographs measured in the prototype in Figure 6.5.

6.4 EXAMINATION OF MODEL-PROTOTYPE DISCREPANCIES

6.4.1 Introduction

There are differences between the characteristics of the runoff hydrographs of the predicted and actual prototype storms. This is

apparent in Figures 6.4 and 6.5 and in Table 6.4. These discrepancies are presumably due to some combination of two causes: measuring errors and/or phenomena in the model and prototype which are not dynamically similar.

6.4.2 Possible Sources of Measuring Errors

6.4.2.1 Prototype

(1) The first possible area of error in the prototype is in measuring the rainfall input to the basin. There is, first of all, the possibility that the measured catch of the SPL1 tipping-bucket rain gage does not give the actual intensity at the point. This gage is in an entirely open location, and because of its exposure to wind it is likely to measure low [e.g., Weiss (1963)]. In addition, the tipping-bucket type of gage tends to measure low because of the small amount of water which is lost when the tipping mechanism is in a "down" position.

Secondly, there is the possibility that the rainfall intensity at the gage at any time is not the intensity of all points in the basin. This is borne out by the discussion of Appendix A.IV of Grace and Eagleson (1965) where the areal variability of storm rainfall is briefly discussed. This effect is likely of secondary importance due to the small size of the drainage basin.

Thirdly, there is a possible error due to the frequency response of the tipping-bucket gage. Eagleson and Shack (1966) have demonstrated that this type of gage is adequate to define the input rainfall signal over its entire bandwidth only when the product of instantaneous rainfall intensity (in/hr) and total storm duration (hr) exceeds 0.78 inches. The resulting critical rainfall intensity *below* which higher frequency information in the rainfall signal is lost is given for each of the four prototype storms in Table 6.5. The time histories of these storms are given in Table 4.2, and it is apparent from these data and

TABLE 6.5

Critical Rainfall Intensity for Tipping Bucket Sampling of Specific Rain Storms

Storm	Critical Prototype Rainfall Intensity (in./hr.)
8	1.3
9	1.5
13	3.1
18	3.6

from the critical intensities in Table 6.5 that a sizable proportion of the rainfall intensities in these storms lie below the critical. The entire history of rainfall intensities in storm 18SPL1 lies below the critical value. Thus it would appear that there is high frequency information actually present in the storms which was not picked up by the tipping bucket rain gage. Thus the measured rainfall histories are smoothed versions of the actual time series.

The ratio of the band width ω_p, of the precipitation signal to the pass band, ω_c, of an urban area is approximated by Eagleson and Shack (1966) to be (for thunderstorms)

$$\frac{\omega_p}{\omega_c} = 1.95 \frac{t_c}{T_R} \tag{6.1}$$

where t_c is the basin concentration time and T_R is the storm duration. For basin SPL1, t_c is about 11 minutes [see Schaake (1965)] and T_R is given for each storm in Table 4.1. Using these figures it is seen that only for storm 18 is $\omega_p > \omega_c$. Therefore, we would expect the *true discharge* from storms 8, 9 and 13 to contain energy in all frequencies present in

the *actual rainfall.* Eagleson and Shack (1966) have shown also that the SPL1 stage recording system is likely to respond adequately to high frequency information. This means that for storms 8, 9 and 13 there is likely to be more high frequency content in the outflow signal than one would expect from the inadequately measured rainfall input. But this is the input which was modelled, so one would expect the discharge hydrograph in the model to be lacking in high frequency information; i.e., the model hydrograph should be too dispersed in form, with discharges which are too low. This is, in fact, what was noted in the *average* model-prototype discharge hydrograph comparison, but the magnitudes of the discrepancies do not follow the percentages of storm duration for which the intensities of any storm lay lower than the critical intensity.

(2) One would think that the amounts of water remaining on the surface of SPL1 following rain storms large enough to give runoff would be approximately equal from storm to storm. If the rain gage and calibrated weir measure correctly, and if there are no extraneous influences, one would then expect a rather constant difference between total rainfall and runoff depth from storm to storm. This is examined in Table 6.6 for the fourteen storms in the SPL1 record, and the difference between total rainfall and runoff is *not* a constant from storm to storm. Note, for example, the differences for storms 7 and 17. Not only could there be errors in the measuring of the rainfall at the gage and the discharge of water through the storm inlet, but the hydrograph of the water reaching the inlet might be in error because of the presence of cars on the parking lot. It is likely that the presence of these vehicles retards the natural runoff from the basin and causes a sizable portion of the rainfall input to remain stored in depressions on the car surfaces.

(3) Other measuring errors appear in the measuring of the outflow hydrograph from the prototype basin. This measurement is done by making use of a calibrated, subsurface weir located at a storm water inlet at

TABLE 6.6

Depression Storage and Apparent Losses in SPL1 Storms

STORM	RAINFALL DEPTH (Ins.)	RUNOFF DEPTH (Ins.)	EXCESS OF RAINFALL OVER RUNOFF (Ins.)
3	0.54	0.49	0.05
4	0.29	0.23	0.06
5	0.28	0.19	0.09
6	0.87	0.70	0.17
7	0.33	0.33	0.00
8	0.52	0.40	0.12
9	0.62	0.46	0.16
10	0.13	0.05	0.08
11	0.12	0.07	0.05
13	1.11	0.93	0.18
16	0.46	0.39	0.07
17	0.31	0.17	0.14
18	0.28	0.25	0.03
19	0.50	0.36	0.14

the low end of the basin. Initially, there are small delays possible because of ponding of water at the inlet and the time of fall into the sump behind the weir.

The second delay in the runoff measurement occurs because of the time lags inherent in the measuring of flow rates using the calibrated weir concept. Eagleson and Shack (1966) have indicated, however, that this effect is likely small for the SPL1 arrangement.

The accuracy of the flow rates determined from using the calibrated weir idea is poor for very low flows since the minimum head change which can be resolved by a suitable float in a weir box in the field is sizable. Fouling of this device by dirt, leaves, sticks, etc., is also a distinct possibility.

(4) Finally, there is the possibility that the timing of the rainfall and runoff histories of the SPL1 storms are not synchronized properly.

6.4.2.2 Model

(1) Since the flow control system employed for the rainfall generator is capable of only fifteen different steady state rainfall intensities, it is not possible to reproduce exactly a desired simulated storm. Flow settings are selected as close to the desired intensities as possible. Thus, although required total rainfall depths are very well duplicated by the rainfall generator, the sequence of rainfall intensities is in error by a small per cent. Coupled with this situation is the fact that the small time lags in the system associated with changes in intensities cause slight errors in the rainfall intensities generated.

(2) There was no ponding of the flow in the model in any test, and so no time lags can be attributed to this cause. The opening to the weighing dish is such that flow proceded out of the basin in an unobstructed manner.

(3) There are several places, in the measurement of the cumulative runoff hydrograph in the model, where small errors could appear. First of all, there is the dynamic contribution of the model runoff which causes the apparent weight of the water in the dish to be higher than the actual amount in the container. This effect was discussed in Chapter 5.2, and in line with this discussion, the bottom of the dish was placed 3 inches below the exit point from the basin to minimize the error. The

magnitude of this error compared to the total weight in the dish is small except at the very beginning of a storm.

The weight of water in the weighing dish at any time is obtained by multiplying the recorded trace on the Sanborn chart by a calibration constant obtained by placing known weights in the dish and then noting the pen deflections at the Sanborn recorder. Rather than use one general calibration curve, the weighing system was recalibrated before every test since the procedure of emptying the dish was carried out after disconnecting the load cell so that it would not be damaged. For a given sensitivity setting at the Sanborn, the same weights did not then always give the same deflection, the differences amounting occasionally to several per cent as shown in Figure 6.6. This could be due to the change in position of the load cell but it also appeared to be due to slightly different points of placing of the weights in the dish rather than to any other causes; e.g., drift in the recording equipment, dirt in the bearings, etc. This is felt to be *the* cause of the scatter in results from the model testing as shown in Figures 6.1 and 6.2, since tests on the rainfall generator itself indicated that any occurrence of a specific simulated storm produced exactly the same total volume of rainfall, and model surface conditions were such that one would expect the same runoff from all occurrences of the same storm. It is difficult to reason whether this fact would cause a positive or negative error, but it is apparent that the location of the model-predicted points in Figures 6.4 and 6.5 might be in error by several per cent.

The weighing beam-load cell-Sanborn recorder system was tested several times for linearity throughout a sizable range of weights and all sensitivity settings which were used in the experiments. Discounting a small error, the response was perfectly linear. This was taken as proof not only that the gage response is linear, but also that any effect of friction in the bearings is a small one. Care was taken

with the weighing beam assembly during the tests to ensure that dirt did not enter the bearings.

The Sanborn recorder used in these experiments was always allowed to warm up for more than two hours before tests were made. There was no drift. The recorder was balanced, and the weighing beam-load cell-recorder system recalibrated before every run of all simulated storms. There would thus appear to be no major error in the recording of the signal from the load cell.

6.4.3 Discussion of Errors

It should be emphasized here that the results obtained *did not* involve alterations in the rainfall generator settings in order to effect better agreement between the model and prototype hydrograph. In spite of the difficulty of reproducing exactly a desired rainfall sequence, it is apparently possible to make adequate *a priori* allowance for the slow dynamic response of the rainfall generator.

Characteristically, the model tests for both the full and reduced storms predict a *cumulative* runoff hydrograph which is too flat and too late. In terms of the *instantaneous* discharge hydrographs, those predicted have a base width which is too long and discharges which are too low. In other words, the model causes more dispersion in the discharge hydrograph than it should.

It is probably true that all of the sources of measuring error cited in Chapter 6.4.2 play some part in causing the model-prototype discrepancies. The relative consistency of the direction of these differences would tend to indicate a more basic source of difficulty, however, namely one in which the question of complete dynamic similarity appears.

The assumptions accompanying the similarity criteria developped by Grace and Eagleson (1966b) are given below:

(1) Surface tension effects are negligible in both model and prototype.

(2) Roll wave formation, if present, is dynamically similar in the model and prototype.

(3) There is no infiltration in the model.

(4) $(\frac{Y}{L})_m \leq 0.003.$ (6.2)

(5) $\theta_m \geq 5°$ (6.3)

(6) For both model and prototype overland flow

$$c_f \tan \theta << 4 \tag{6.4}$$

(7) The overland flow is two-dimensional.

In the list above the subscript m refers to the model, Y and L are the reference depth and horizontal length, respectively, θ is the average slope, and c_f is the friction coefficient which for turbulent flow can be written in terms of the depth and Manning's n as

$$c_f = \frac{29n^2}{Y^{1/3}} \tag{6.5}$$

The subscript p refers to the prototype.

The biggest question mark among the assumptions is Assumption (1) which will be discussed in the next paragraph. Roll waves were never observed during the model tests and from Figure F-1 in Grace and Eagleson (1965) it is doubtful that roll waves would have developed during any of the storms in the prototype since the tangent of the slope angle of SPL1 is only 0.017. Assumption (3) is satisfied from the construction of the

model. In order to invalidate Assumption (4), the depth of water at the base of the model slope would have had to be greater than about 1/4 inch. This is a borderline case, since in storm 13SPL1 this depth approached this magnitude. Assumption (5) is satisfied as is Assumption (6) since $\tan \theta_m = 0.122$ and a representative maximum value of c_f in the model, using Equation (6.4) is about 0.1. Assumption (7) is not met although the difference would not be expected to be severe since the model flow converged gradually on the exit point from the basin.

It would appear that a lack of satisfaction of Assumption (1) is the prime contributor to the discrepancies between the model and prototype hydrographs which are due to causes other than measuring errors. This contribution would also be in the proper direction to close the gap between the two curves, since its effect would be to hold water on the model surface for a disproportionate length of time.

Another possible source of error exists because the momentum coefficients (β) in the model and prototype flows were not equal. Grace and Eagleson (1966b) show that these coefficients must be equal for dynamic similarity to be realized, and they theorized that this would be true since rainfall impingement would cause sufficient mixing in both cases so that the flows would be turbulent. The fact that there were no discontinuities in the cumulative hydrograph plot following cessation of rainfall or a considerable reduction in rainfall intensity is taken to be evidence that there was no change in flow regime. It would then appear that $\beta_m \neq \beta_p$ unless the flow in the prototype is laminar; also, Schaake (1965) contends that the latter is so for these basins.

If the flow in model and prototype *is* actually laminar, then the following equation provides an estimate of the friction factor in both cases:

$$c_f = \frac{6}{\mathbb{R}} \tag{6.6}$$

Figure 4.3 shows that $U_r Y_r = 0.34$, so that the Reynolds number in the model is less than that in the prototype. This means, again with the assumption of laminar flow in model and prototype, that $c_{f_r} = 2.9$, whereas c_{f_r} should be 7.1 according to Figure 4.3. Thus dynamic similarity with respect to frictional effects is not apparently maintained. This implies that the right-hand side of the applicable momentum equation for overland flow in the model and prototype

$$\left[\frac{\bar{y}}{\mathbb{F}^2} \sec\theta + \beta\bar{V}^2\right] \frac{\partial\bar{y}}{\partial\bar{x}} + [2\bar{V}\bar{y}\beta] \frac{\partial\bar{V}}{\partial\bar{x}} + y \frac{\partial\bar{V}}{\partial\bar{t}} + \bar{V} \frac{\partial\bar{y}}{\partial\bar{t}}$$
$$= \frac{L}{Y} \frac{\bar{y}}{\mathbb{F}^2} \sin\theta \sec^3\theta - c_f \frac{L}{Y} \frac{\bar{V}^2}{2} \sec^3\theta \tag{6.7}$$

is larger for the model than for the prototype. This by itself would indicate a faster rate of increase of the differential terms on the left-hand side of Equation (6.6) in the model than in the prototype, but this does not explain the relatively slow development of the cumulative hydrograph in the model. It would then appear that there are more severe effects from other sources of error, and again surface tension phenomena would appear to play a leading role.

If the flow in model and prototype is *turbulent*, the desired ratio of model/prototype friction factors is again not satisfied. Using Equation (6.5) the actual value of $c_{f_r} \approx 1$ in the experiments since friction coefficients are relatively insensitive to depth and because the values of Manning's n in model and prototype are comparable. Thus, as in the case where a laminar-laminar correspondence was proposed, the frictional forces in the model are too small.

Another question concerns the losses in the prototype, and how these should be taken into account. Scaling all pulses by the same amount to take account of losses does not give good results. Subtracting the losses from the beginning of each storm, while physically reasonable, would increase the delay of the model-predicted cumulative hydrograph still further. Subtracting the losses from the end of the storm is physically unattractive, and no increase in accuracy would be afforded since there are model-prototype discrepancies long before getting to such a cut-off point. Besides, the prototype hydrograph is sensitive to all wide swings in rainfall intensity wherever they appear in time within a storm.

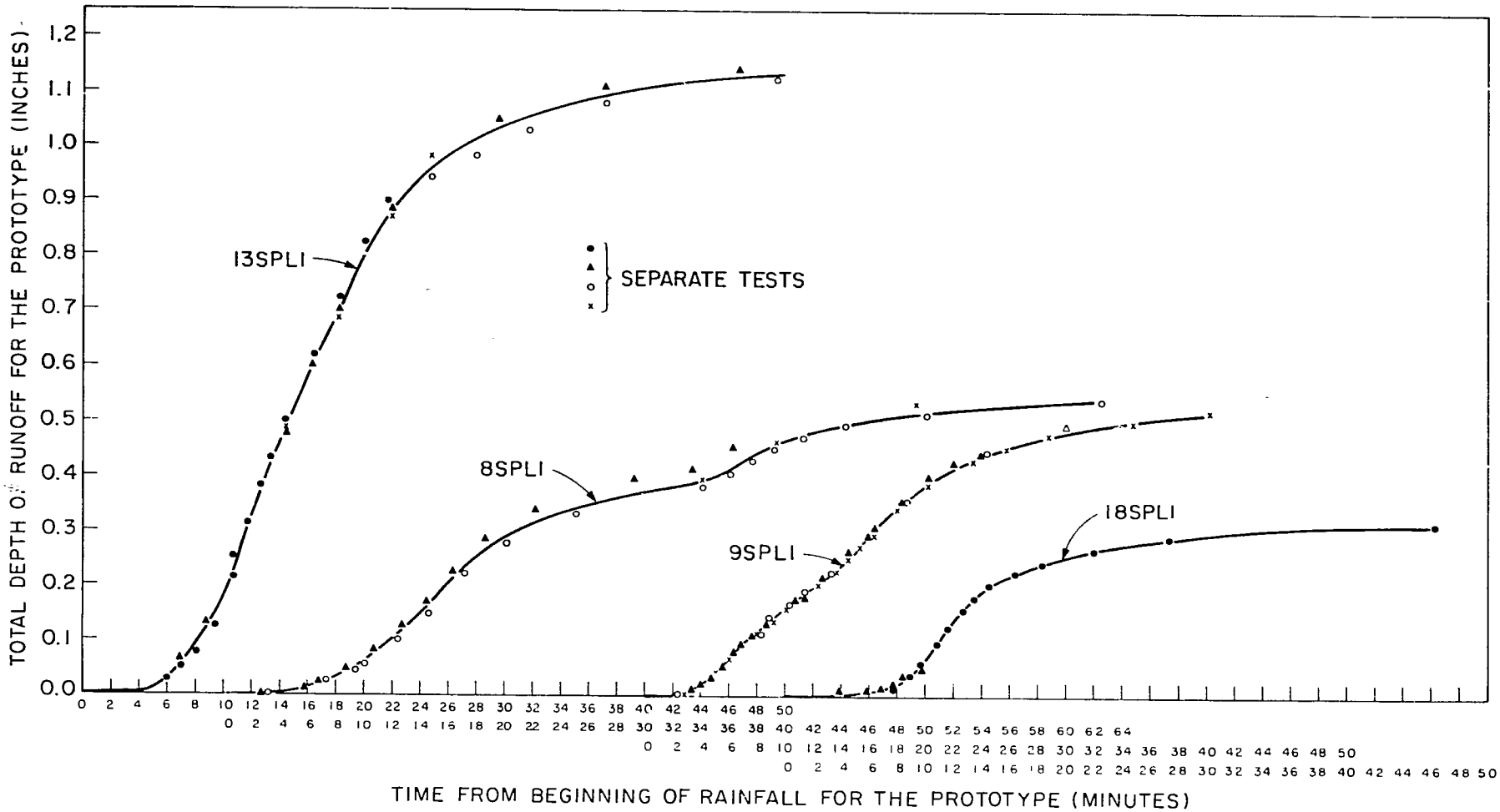

Figure 6.1: Approximate Cumulative Runoff Hydrograph in the Prototype Predicted from Physical Model Experiments Using a Relatively Rough Surface: Full Storms

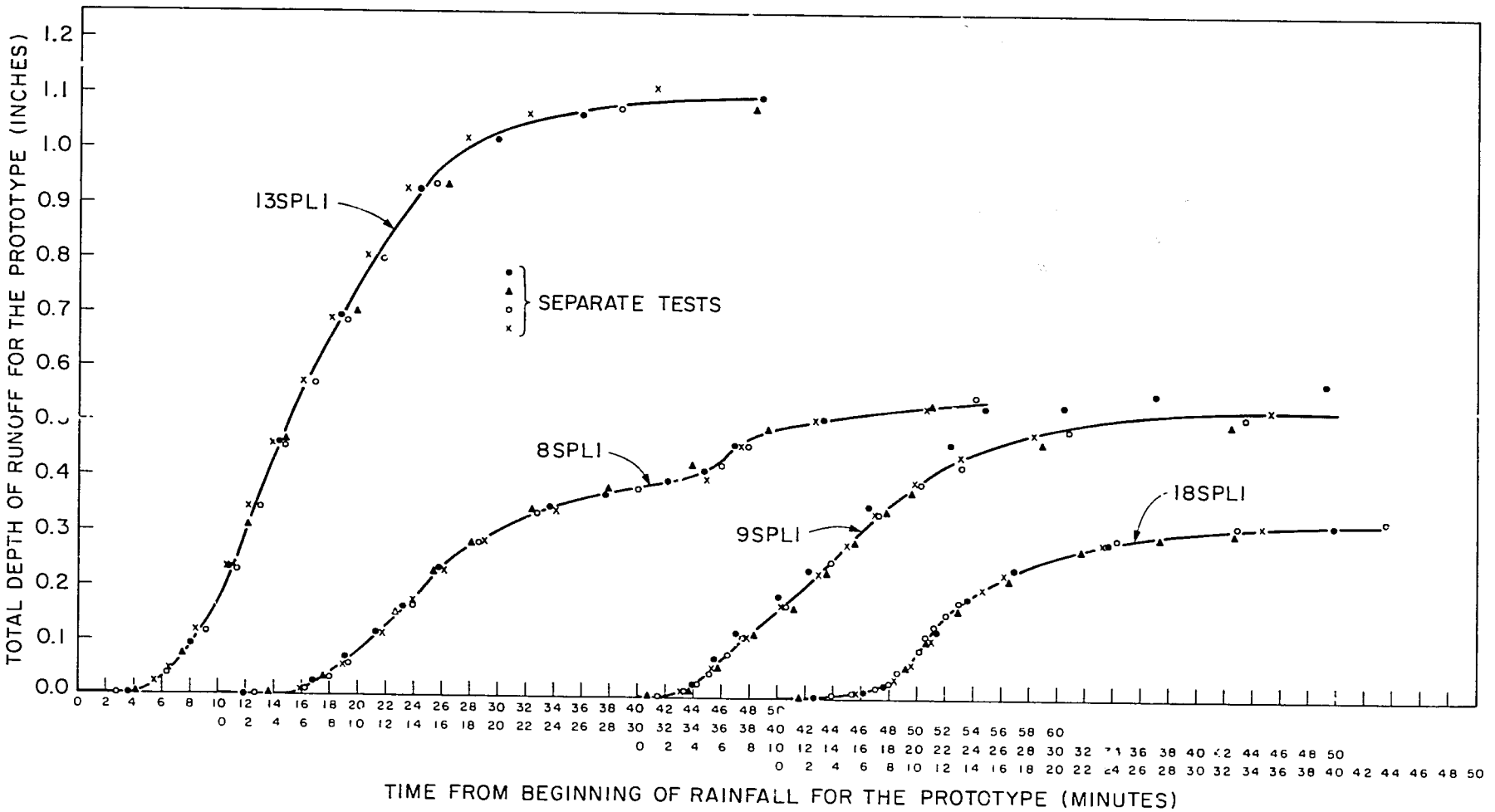

Figure 6.2: Approximate Cumulative Runoff Hydrograph in the Prototype Predicted from Physical Model Experiments Using a Relatively Smooth Surface: Full Storms

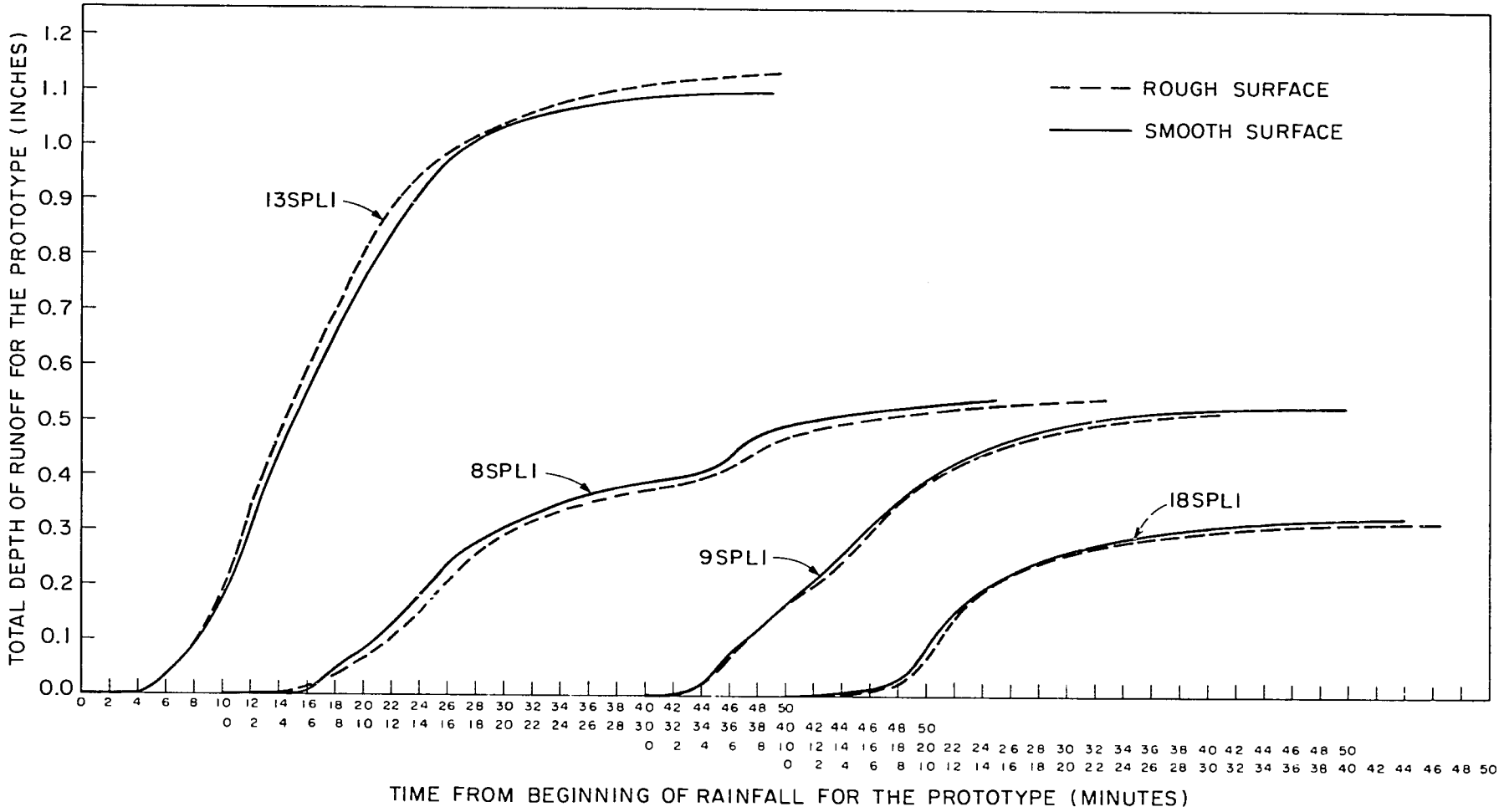

Figure 6.3: Comparison between Cumulative Hydrographs for the Prototype Predicted Using Rough and Smooth Surfaces: Full Storms

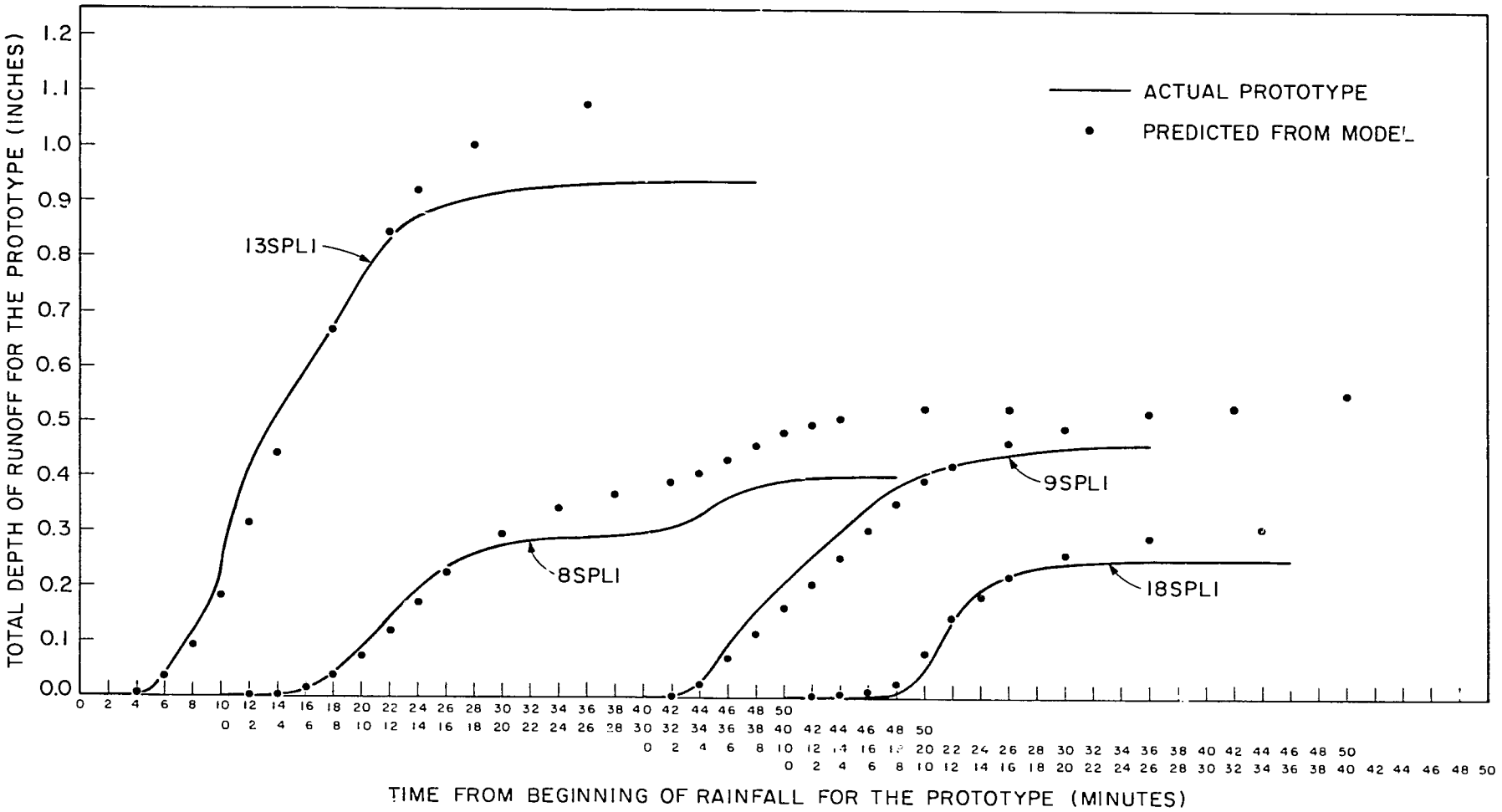

Figure 6.4: Comparison between Actual Prototype Cumulative Runoff Hydrograph and That Predicted by the Model: Full Storms

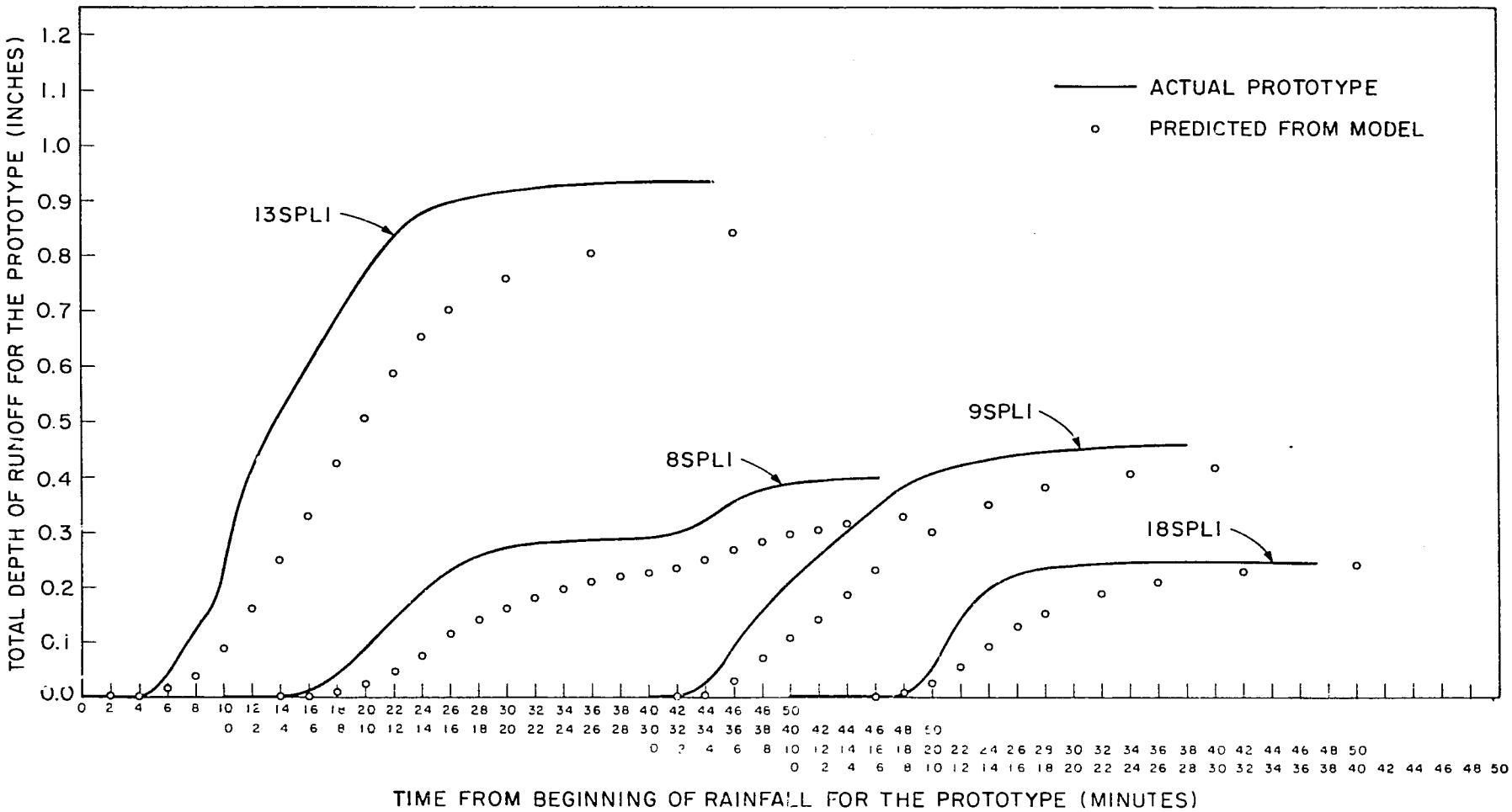

Figure 6.5: Comparison between Actual Prototype Cumulative Runoff Hydrograph and That Predicted by the Model: Reduced Storms

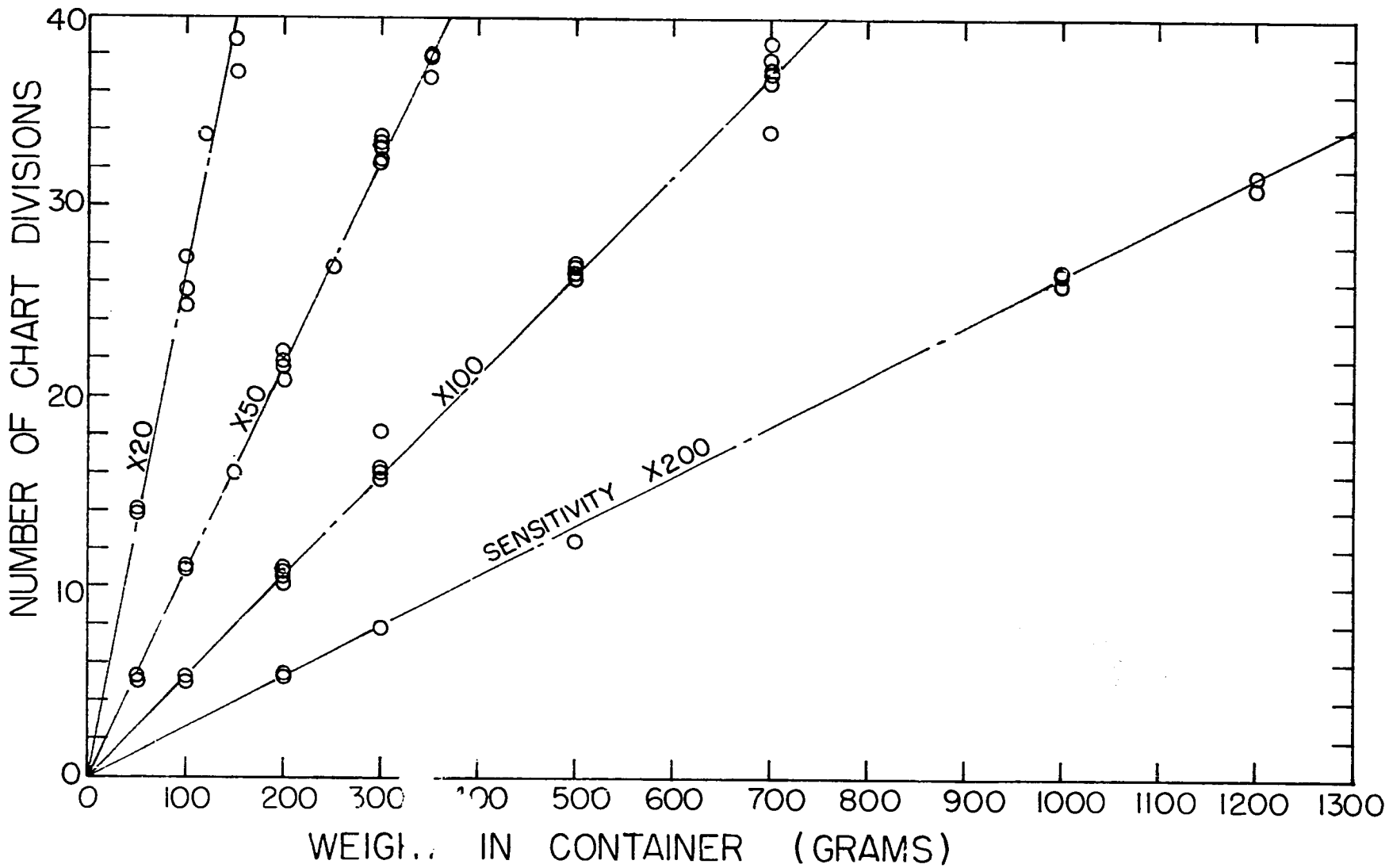

Figure 6.6: Calibration Curves

7 CONCLUSIONS AND RECOMMENDATIONS

7.1 CONCLUSIONS

Early experiments have shown that the physical modelling of the rainfall-surface runoff process is feasible, and they have demonstrated further that the model predicts a discharge hydrograph which possesses more dispersion than its prototype counterpart. The discrepancies between the field-measured and model-predicted results are not severe. For example, the average differences in magnitude and timing of the peak discharge are less than 10 per cent, and the duplication of prototype measurements is considered to be good.

7.2 RECOMMENDATIONS

Three general recommendations for the study of physical model drainage basins were presented by Grace and Eagleson (1965). These are given below, where the initial set of experiments reported on herein has been a part of carrying out Recommendation (1). The work to be carried out under this description is by no means completed.

(1) In order to insure that the similarity criteria derived actually *do* permit the modelling of a prototype basin and the rainfall-runoff process within it, models of prototype basins which have extensive rainfall-runoff records should be constructed, tested and verified.

(2) Experimental studies should be carried out on models, for which corresponding prototype rainfall-runoff data are available, which violate in some controlled manner the strict similarity criteria, in order to investigate to what extent these modelling criteria can be violated and yet still give results which are valid to a prescribed accuracy.

(3) When it has been assured that the laboratory drainage basin is a valid tool for hydrologic research, then a number of general studies on the rainfall-runoff characteristics of actual drainage basins will be possible and should be undertaken.

First of all, the four storms (full and reduced) applied to the model of SPL1 should be provided as input to SPL2 and the cumulative hydrographs obtained to provide a check on the findings obtained using SPL1. An attempt should then be made, for both SPL1 and SPL2, to try and isolate the cause of disparities between the field-measured and predicted hydrographs by examining the various sources of error, both actual errors and those involved in taking measurements. Since a change in the equipment to provide areal nonuniformity would be a major one, other sources of error should be probed first.

The effect of surface tension should be examined first by adding to the water an appropriate reagent and/or by coating the surface of the model. The full and reduced storms for both SPL1 and SPL2 should then be repeated. If the model-prototype discrepancies are still sizable, then provision should be made for measuring errors; i.e., the storms might be scaled up or down, the timing changed, and areal nonuniformity provided.

Future tests should also be recorded on magnetic tape so that an analog to digital converter could be used to enable tabulating, smoothing and differentiating of the cumulative hydrograph to be carried out more expediently and less subjectively within a computer. Also, the rainfall generator should be set up for areal nonuniformity as soon as possible.

When the various aspects of Recommendation (1) have been studied, then extensive programs under Recommendations (2) and (3) should be undertaken.

8 REFERENCES

Anonymous, "Rainfall Simulating System," Computers and Automation, Vol. 15, No. 1, p. 40, January, 1966.

Chery, D. L., Jr., "Construction, Instrumentation, and Preliminary Verification of a Physical Hydrologic Model," Joint Report of the U. S. Department of Agriculture and Utah State University, July, 1965.

Chow, V. T., Open Channel Hydraulics, McGraw-Hill, New York, 1959.

Chow, V. T., and T E. Harbaugh, "Raindrop Production for Laboratory Watershed Experimentation," Journ. Geophys. Res., Vol. 70, pp. 6111-6119, 1965.

Dean, R. G., and F. Ursell, "Interaction of a Fixed, Semi-Immersed Circular Cylinder with a Train of Surface Waves," M. I. T. Hydrodynamics Laboratory, Technical Report No. 37, September, 1959.

Eagleson, P. S., Mejia, R., and F. March, "The Computation of Optimum Realizable Unit Hydrographs from Rainfall and Runoff Data," M. I. T. Hydrodynamics Laboratory Report No. 84, September, 1965.

Eagleson, P. S., and W. J. Shack, "Some Criteria for the Measurement of Rainfall and Runoff," Paper submitted for publication to Water Resources Research, (in press), 1966.

Grace, R. A., and P. S. Eagleson, "Similarity Criteria in the Surface Runoff Process, M. I. T. Hydrodynamics Laboratory Report No. 77, July, 1965.

Grace, R. A., and P. S. Eagleson, "The Synthesis of Short-Time-Increment Rainfall Sequences," M. I. T. Hydrodynamics Laboratory Report No. 91, May, 1966a.

Grace, R. A., and P. S. Eagleson, "The Modelling of Overland Flow," Paper submitted for publication to Water Resources Research, (in press), 1966b.

Kolpak, M., "An Instrument Package for the Laboratory Study of the Kinematics of Shoaling Waves," M. I. T. Department of Civil Engineering, S.M. Thesis, June, 1965.

Mamisao, J. P., "Development of an Agricultural Watershed by Similitude," Iowa State College, M.S. Thesis, 1952.

March, F., and P. S. Eagleson, "Approaches to the Linear Synthesis of Urban Runoff Systems," M. I. T. Hydrodynamics Laboratory Report No. 85 (Revised), September, 1965.

Mutchler, C. K., and L. F. Hermsmeier, "A Review of Rainfall Similators," Trans. A. S. A. E., Vol. 8, No. 1, pp. 67-68, 1965.

Rouse, H., (Editor), Engineering Hydraulics, Wiley, New York, 1950.

Schaake, J. C., Jr., "Synthesis of the Inlet Hydrograph," The Johns Hopkins University, Storm Drainage Research Project, Technical Report 3, June, 1965.

Weiss, L. L., "Securing More Nearly True Precipitation Measurements," Journ. Hyd. Div. A. S. C. E., Vol. 89, No. HY2, pp. 11-18, March, 1963.