PN-AAE-935, PGC 2

TECHNICAL DIGEST SUPPLEMENT

No. 1

ENERGY FROM THE SUN

Energy from the sun.

McGraw-Hill Technical Writing Service, N.Y.
Energy from the sun. May 1960.
48 p.
Bibliography: p. 47-48.
Technical Digest Supplement no. 1.
Prepared for ICA.

1. Solar energy. 2. Power resources. I. Title.

INTERNATIONAL COOPERATION ADMINISTRATION

TECHNICAL AIDS BRANCH • OFFICE OF INDUSTRIAL RESOURCES

WASHINGTON 25, D.C.

A.I.D.
Reference Center
Room 1656 NS

PA-1-1-989

TECHNICAL DIGEST SUPPLEMENT

No. 1

ENERGY FROM THE SUN

May 1960

Technical Aids Branch
Office of Industrial Resources
INTERNATIONAL COOPERATION ADMINISTRATION
Washington, D. C.

ENERGY FROM THE SUN

FOREWORD

This report is one of a series of special supplements to the Technical Digest, which is published monthly for the International Cooperation Administration by the Office of Technical Services, U. S. Department of Commerce, Washington, D. C. The Technical Digest summarizes information from various sources dealing with work methods, manufacturing processes, and business and industrial techniques.

Each of the reports in this series is designed to provide more detailed information on a single aspect of these methods, processes or techniques.

The following report covers the use of energy from the sun. It was prepared for the International Cooperation Administration by the McGraw-Hill Technical Writing Service, New York, N. Y. Mention of the name of any firm, product, or process herein is not to be considered a recommendation or endorsement by the International Cooperation Administration or the U. S. Department of Commerce.

For further information and assistance readers should contact their local Productivity Center, Industrial Institute, Servicio, or United States Operations Mission.

MAY 1960

Code
TD-1

TABLE OF CONTENTS

Topic	Page
INTRODUCTION	1
Nature of our sun	1
Using solar energy	3
Energy costs	5
REFLECTION FOR SOLAR COOKERS AND OVENS	7
SOLAR COOKERS	7
Cooker parts	7
Reflectors	8
Stands or mountings	12
Pot holders	14
Heat output	14
Cooker costs	15
USING SOLAR COOKERS	15
Safety precautions	16
Future use of solar cookers	16
Other cooker designs	17
SOLAR OVENS	17
Insulated box	18
Glass windows	19
Reflectors	19
Triangular ovens	21
Pot ovens	21
Cylindrical ovens	22
Cooking with solar ovens	22
Oven advantages	23
Oven operation	23
Cooking without stirring	23
SOLAR STILLS	24
Types of stills	24
Flat tilted still	27
Plastic stills	28
Still performance	28
Future of solar stills	29
SOLAR WATER HEATERS	30
Types of water heaters	30

TABLE OF CONTENTS
(continued)

Topic	Page
OTHER USES OF SOLAR ENERGY	35
Pumping of water	36
Solar space heating	41
Solar space cooling	43
Solar power	44
CONCLUSIONS	46
BIBLIOGRAPHY	47

INTRODUCTION

One of the greatest sources of energy known to man is the sun. Scientists estimate that the sun will continue to radiate energy to the earth for several billion years. All the electric lights in all the cities of the world could be kept lighted for three years by the energy in just one day's sunlight. Scientists are stepping up their study of solar energy, because this abundant source of energy is readily available and because our supply of fossil fuels may be dangerously low by the year 2,000, particularly for underdeveloped areas. This article discusses the major methods of utilizing solar energy today.

Nature of our sun. Our sun is 93 million miles from the earth. A minor star made up of masses of hot gases, it is 864,000 miles in diameter. Thus, it is 108 times the diameter of the earth (about 8,000 miles). Energy from the sun is developed when hydrogen atoms in the hot gases combine to form helium. Our sun has enough hydrogen to continue this energy releasing process for the next four billion years. Of the enormous quantity of energy released by the sun only one part in two billion reaches the earth. Figure 1 shows how solar energy is changed to other forms of energy on the earth.

Radiation reaching the earth in the form of sun rays varies with the time of the day and the location on the surface of the earth. In sunny, temperate climates the intensity of radiation may be as high as 1.25 horsepower per square yard of the earth's surface.[1] Cold, snowy areas may receive so small a quantity of energy that it is rated as zero. The average annual radiation on a horizontal surface in sunny, temperate climates is 1500 to 2000 British thermal units per square foot per day. Scientists estimate that the United States alone receives each year, in the form of sunlight, about 1,500 times its total present energy demand.

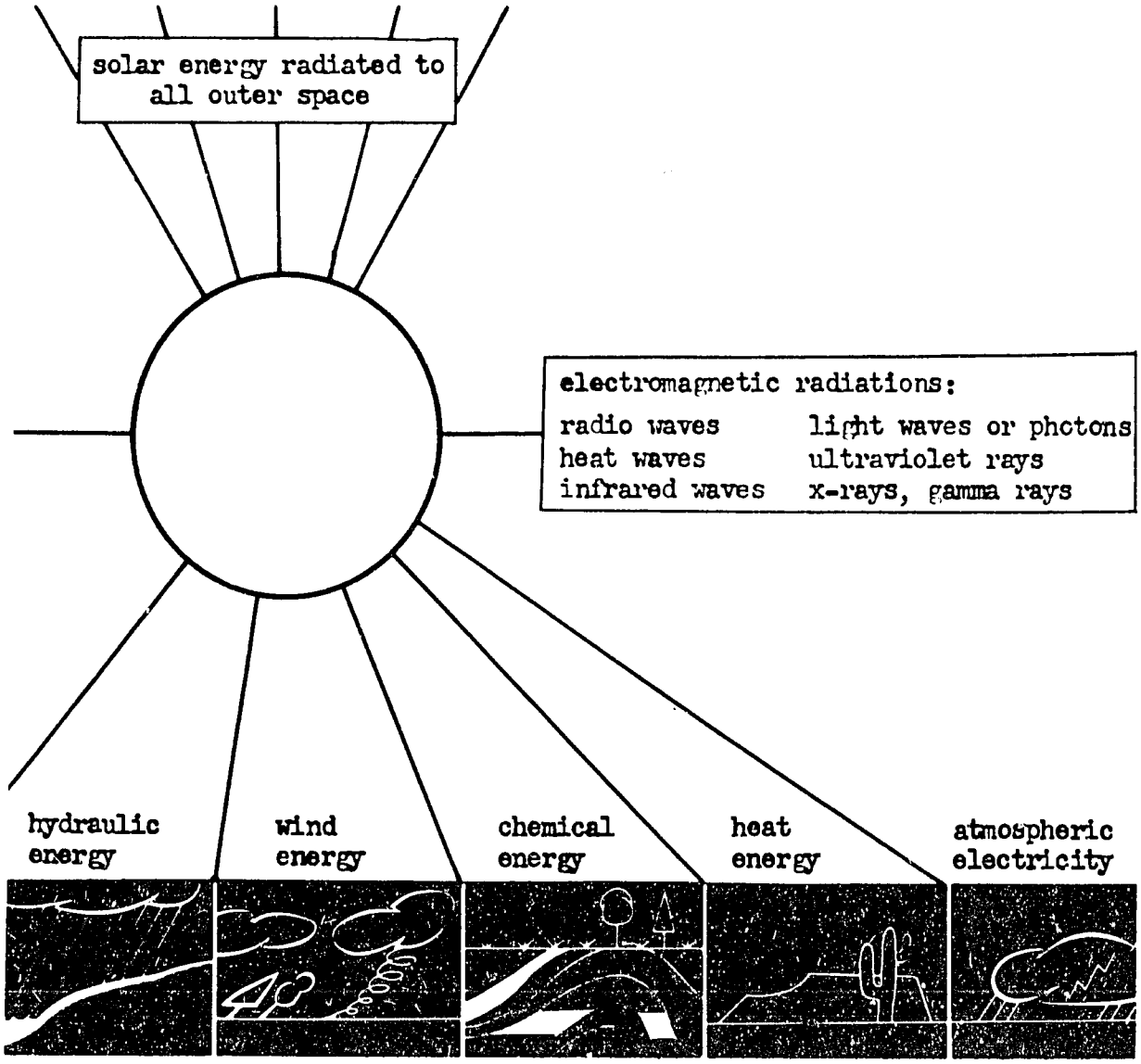

Figure 1. The sun's energy reaches every phase of life on earth. (Courtesy of Power magazine).

Of the sun's rays reaching the earth the light rays have the greatest intensity or brightness. The heat or infrared radiations have the largest quantity of heat. In using solar energy we are interested in both heat and light. Some ultra-violet rays also reach the earth but they are only about 4% of the total radiation we receive from the sun.

Using solar energy. Solar energy is currently used in eight different ways: (1) cooking and baking, (2) water heating, (3) space heating or cooling, (4) water distillation, (5) powering engines for pumping water or generating electricity, (6) solar furnaces, (7) photoelectricity, and (8) photochemistry. The first seven are discussed here, and greatest emphasis is given to uses valuable in underdeveloped areas. Figure 2 shows how solar energy can be used by man.

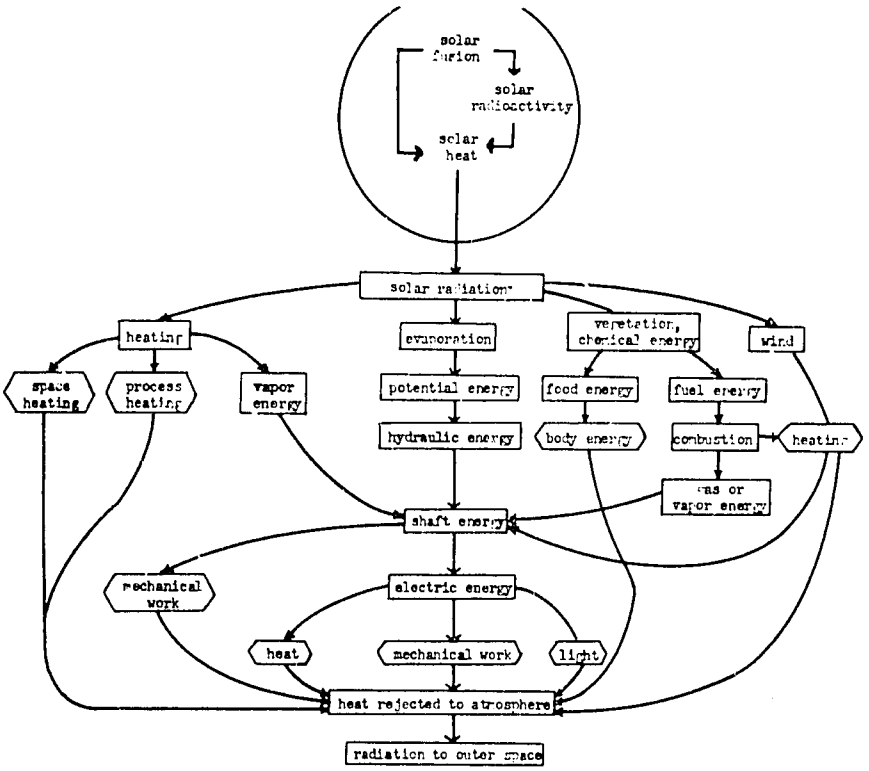

Figure 2. Flow paths of sun-derived energy. (Courtesy of Power magazine).

The most important part of any system[1] using solar energy is the solar "collector" or heat exchanger, Figure 3. Two types of collectors are popular today -- (1) focusing and (2) flat plate collectors. Focusing collectors use an optical system, usually a reflector, to concentrate the sun's rays onto a heat exchanger (a pot or other device) having an area smaller than the area of the collector.[1] By concentrating the rays on the smaller area of the heat exchanger a larger amount of energy is transmitted to the exchanger than if it were placed in the sun without a

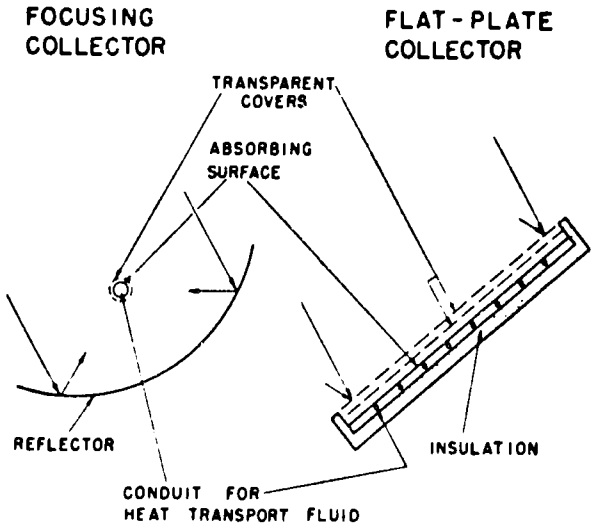

Figure 3. Focusing and flat-plate solar collectors. The focusing collector operates only in direct radiation. Flat-plate collectors operate on direct and diffuse radiation and do not have to be moveable. (Courtesy of University of Wisconsin and The Canadian Journal of Chemical Engineering.)

collector. Also, the heat exchanger's small area causes less heat loss to the surrounding air. Focusing collectors are commonly used where high temperatures are desired.

Flat-plate collectors have a solar energy absorbing surface equal in area to the total area of the collector. There is no concentration of the energy, as in the focusing collector. Most flat-plate collectors are used in applications where lower temperatures are satisfactory.

Since the sun does not shine continuously in many areas, the solar energy supply fluctuates. This fluctuation of supply can be smoothed out by using heat storage systems. In applications such as pumping irrigation water or distilling brackish water, the equipment should be sufficiently large to produce more than the total desired output while the sun shines. The excess water obtained is stored until a need for it develops. If the sun is not shining when the water is needed, the stored water is used, thus providing a continuous supply. Similar schemes can be used for water heating, cooking, baking, and space heating or cooling.

Energy costs. Table 1 shows the costs of energy to perform certain tasks in various parts of the world.[1] Today solar energy is not yet competitive with energy from other sources for tasks like space heating, space cooling, or power generation. Solar energy may, however, be the most economical source when no other forms of energy are available, as in underdeveloped areas. In arid, tropical countries solar energy can make an important contribution to the economy of these nations. For example, dried cow dung and other refuse is used in some countries as a fuel for cooking food. This age-old practice deprives the land of its natural fertilizer. It is estimated that if the land were supplied minerals by this animal fertilizer, the agricultural yield could be nearly doubled. The introduction of an inexpensive solar cooker would thus produce a major improvement in food supplies.

There are also other considerations, besides the direct cost of energy. If solar cookers could be made consistent with the eating and living habits of their users, they could be used by millions of people who are now using primitive fuels like cow dung and wood. In northern Mexico, for instance, fuel for cooking is a major item of expense for many low-income families. Reduction in the use of their wood fuel for cooking would improve their economic situation and decrease the rate of deforestation. Small, inexpensive refrigerators, operated by solar energy, could provide facilities for food preservation not now existent in many underdeveloped areas.

Salt water demineralization by solar distillation could provide potable water in arid regions where solar radiation is high. In comparison with the usual costs of natural fresh water, the projected prices for solar-distilled water are very high. But the need for demineralized saline water is expanding. In favorable locations solar distillation of saline water has the potential of becoming economically attractive where potable water must be obtained for human consumption.

For these reasons solar energy holds much promise for the future. Active research and development programs are underway throughout the world. This article describes and discusses the advances made so far. Its first topic is solar cookers--probably the best devices for the introduction and development of solar energy in underdeveloped nations.

TABLE 1. ESTIMATED COSTS OF ENERGY FOR SEVERAL APPLICATIONS AT SELECTED LOCATIONS. (Courtesy of The Canadian Journal of Chemical Engineering).

Location	Type and Capacity	Cost	Notes and References
SPACE HEATING			
1. Central U.S.	10^5B.t.u./hr. oil burner	\$1.50/10^6B.t.u.	Fuel oil at 15¢/gal., fuel cost only.
2. Western U.S.	10^5B.t.u./hr. LPG system	\$2.00/10^6B.t.u.	Propane at 17¢/gal., fuel cost only.
3. Denver	Natural gas	\$0.75/10^6B.t.u.	Fuel cost only.
SPACE COOLING			
1. South U.S.	2–5 tons compression	5–8¢/ton hr.	Electric power at 2–4¢/k.w.h, C.O.P. = 2.5, 20% load factor, equipment cost included at 10%/yr.
2. South U.S.	2–5 tons absorption	2.5–6¢/ton hr. 5.5–9¢/ton hr.	Fuel cost only, at \$0.75 to \$2.00/10^6B.t.u. Same, with equipment cost included as in No. 1.
3. Cairo, Egypt	2–5 tons compression	12¢/ton hr.	Electric power at 7.5¢/k.w.h. fixed cost. 40% load factor.
4. Dakar, West Africa	2–5 tons compression	25¢/ton hr.	Electric Power at 17¢/k.w.h. 10%/yr. fixed cost, 40% load factor.
POWER			
1. U.S.A.	Industrial large capacity	1¢/k.w.h.	Power generated at large central thermal power stations or hydroelectric stations.
2. U.S.A.	Small central power plant	3¢/k.w.h.	Power from a 10,000 k.w. central power station.
3. Rural U.S.	Auxiliary generator	4–8¢/k.w.h.	Power from small gasoline generator plants of 2–3 k.w. capacity.
4. Cairo, Egypt		7.5¢/k.w.h.	Residential lighting rate [7].
5. Dakar, West Africa		17¢/k.w.h.	Residential rate [7].
6. Rural India	Animal power	15–30¢/k.w.h.	Power for lifting irrigation water [8], estimated in terms of electrical equivalent.

REFLECTION FOR SOLAR COOKERS AND OVENS[3]

Solar energy can be concentrated by using reflectors or mirrors, which can be any of the following:

(a) Spherical parabolic reflectors, Figure 3, may reflect energy to a cooking device placed at the focus. Such reflectors must be moved every 10 or 15 minutes to keep the focus image on the target. The cooking device is usually exposed to circulating air and wind. A shielding provided by heat-insulating covers is not convenient to use because the food must be stirred frequently to prevent burning at the focus point.

(b) Cylindrical parabolic reflectors may focus solar energy to a tubular absorber which circulates a heat-transfer liquid to a separate insulated oven. An exact movement of the reflector is essential to keep the focus line on the target.

(c) Plane mirrors may reflect solar radiation through a "window" into an insulated oven.

SOLAR COOKERS[3]

Solar cookers are the most popular devices using the sun's energy. With a solar cooker complete meals can be prepared in areas where there is no other source of heat readily available. Cookers are also useful for heating water for human consumption or bathing.

Two types of solar cookers are available today: (1) the direct or reflective type and (2) the indirect or oven type. Direct types of solar cookers are discussed in this section; indirect types of solar cookers are discussed in the next section.

Cooker parts. Figure 4 shows the basic parts of a direct-type reflective cooker. These are (1) a reflector to concentrate the sun's rays to a spot smaller in area than the bottom of the pot, (2) a stand or mounting so the reflector can be pointed towards the sun while being supported at the best angle for cooking, and (3) a pot holder to support the

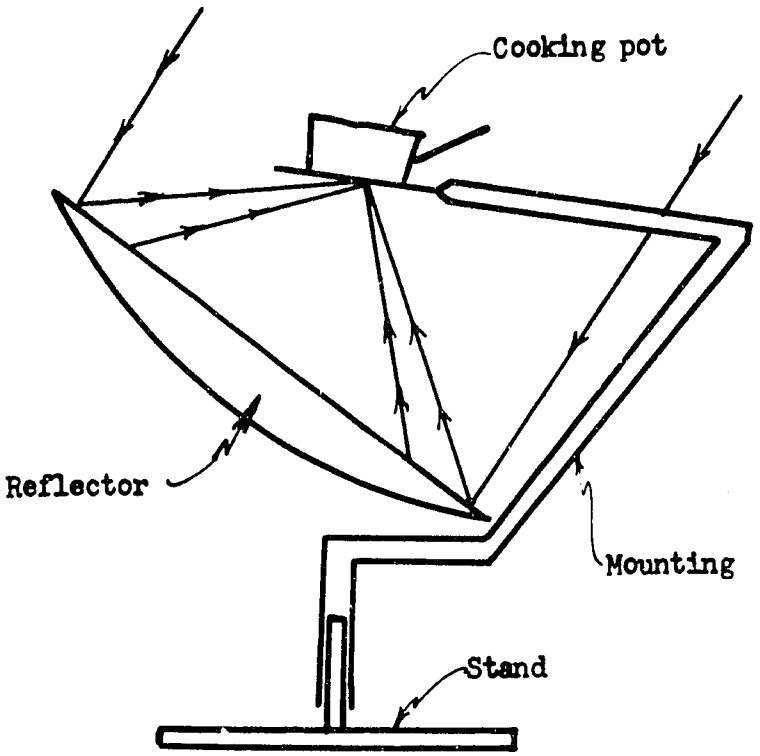

Figure 4. Direct-type solar cooker fitted with a focusing reflector of parabolic shape. (Courtesy of University of Wisconsin).

pot at the point where the sun's rays are concentrated. In most cooker designs the pot holder and stand are combined into a single, tubular part.

The cooker in Figure 4 concentrates the sun's rays in much the same way a magnifying glass does. When concentrated on a small area, the rays produce a temperature high enough to boil water and cook foods of various kinds.

Reflectors. Reflectors for direct-type cookers are usually parabolic in shape, Figure 4. Some are dish-shaped, such as a large saucer. The body or shell of the reflector may be made of plastic, metal, or other suitable material. Plastic is preferred because it is light, strong, and relatively inexpensive. Plastic parabolic reflectors can be accurately molded with a minimum of labor.

Recently introduced parabolic-type reflectors, Figure 5, use an umbrella-like structure fabricated of a Mylar-vinyl-cloth laminate. This reflector can be folded when

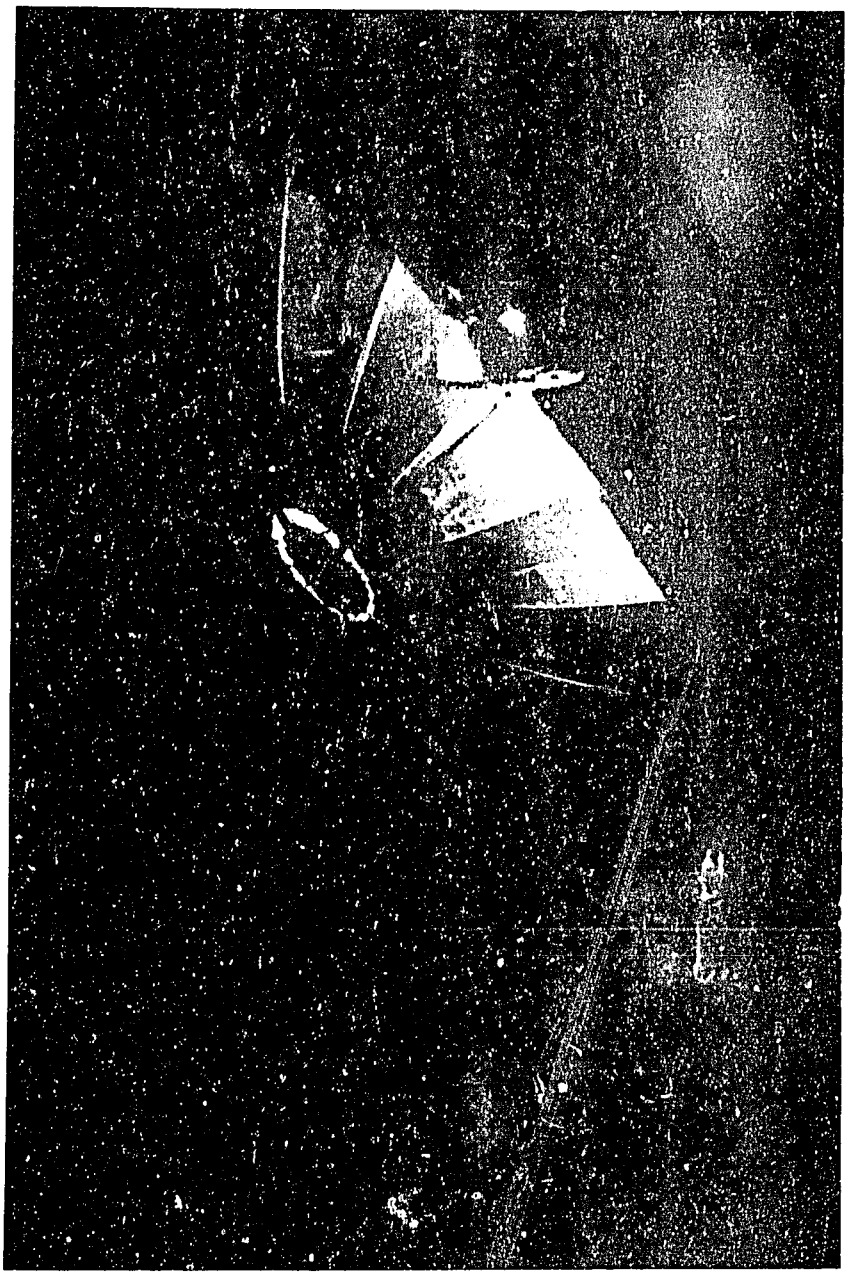

Figure 5. Collapsible umbrella-type solar cooker approximates a parabolic shape. (Courtesy of G. O. G. Löf).

not in use. At present this reflector is widely used in recreational areas but it may become popular as a cooker in areas where other sources of heat are scarce.

The reflective surface of a solar cooker must be bright, shiny, and mirror-like if maximum efficiency is to be obtained. To produce this high reflectivity the reflector is lined with a suitable material or metalized with a reflective coating. The reflective material must withstand the sun's rays, varying atmospheric conditions, and should have a high reflectivity which does not decrease with age. It should be easy to clean, inexpensive to replace if reflectivity decreases, and should resist abrasives and solvents that may be used in cleaning.

Aluminized Mylar film reflective lining is used on the cooker shown in Figure 6. This film is bonded to the 50-millimeter thick[4] drape-formed high-impact polystyrene reflector shell. Other plastic materials used for shells to which a Mylar film is bonded include fiberglass, cellulose acetate butyrate, and vinyl cloth. Reflective surfaces are also made of aluminum foil or silvered cellulose acetate butyrate.

Solar cookers developed in Burma use rectangular wooden frames for the shell and bright, tinned metal sheets for the reflective surface. The shape of the reflective surface is semi-parabolic. These cookers, used for the preparation of meals and potable water, are cheap and easy to build. Another design developed in Burma uses wooden ribs and aluminum sectors forming a parabolical reflector which stands on a 2-foot square wooden pedestal. These reflectors are used for salt manufacture and for palm-jaggery manufacture in hot and dry areas lacking fuel of any kind. In some parts of Burma glass mirrors are used as reflectors. These glass mirrors are being replaced by the lower cost, lighter weight metal reflectors.

A cone-shaped solar stew pot built in Guatemala from cardboard, sticks, Scotch Tape, and aluminum wrapping foil produces enough heat to boil water. The cone shape has an advantage over a parabola because a larger focal spot is produced.

Figure 6. Direct-type solar cooker has a plastic reflector coated with aluminum foil. (Courtesy of University of Wisconsin).

Solar cooker reflectors are also built of soil-cement, lightweight concrete aggregate, and inflatable plastic. To date none of these structures have been as popular as thin structural plastic shells.

Reflectors for solar cookers vary in diameter from a minimum of 15 inches to a maximum of about 96 inches. The larger diameter reflectors deliver more heat to the food to be cooked. A diameter of at least 36 inches is required for the rapid cooking of family-size food quantities.

Stands or mountings. Maximum heat is derived from the sun's rays if the reflector is supported so it points toward the sun. A variety of materials can be used for the stand. Thin-wall metal tubing, brass or steel rods, and wooden planks or poles make good stands. Figure 7 shows six schemes for supporting a reflector. The cooker in Figure 6 uses thin-wall metal tubing.

A satisfactory stand must be strong, light, and easy to disassemble for transportation from one site to another. Since solar cookers are used in the open where there is little protection from the wind, the stand must have enough stability to prevent being overturned by the wind. The operator of the cooker should be able to turn the reflector to follow the sun without moving the stand.

Wood is the cheapest supporting material, but it is cumbersome and heavy. Concrete is heavy and difficult to transport. A properly designed metal support has enough stability to prevent the overturning of the cooker in moderately strong winds. Simple fastenings make it easy to rotate the reflector to follow the sun. Metal cooker stands are almost universally used except in crude, temporary cookers.

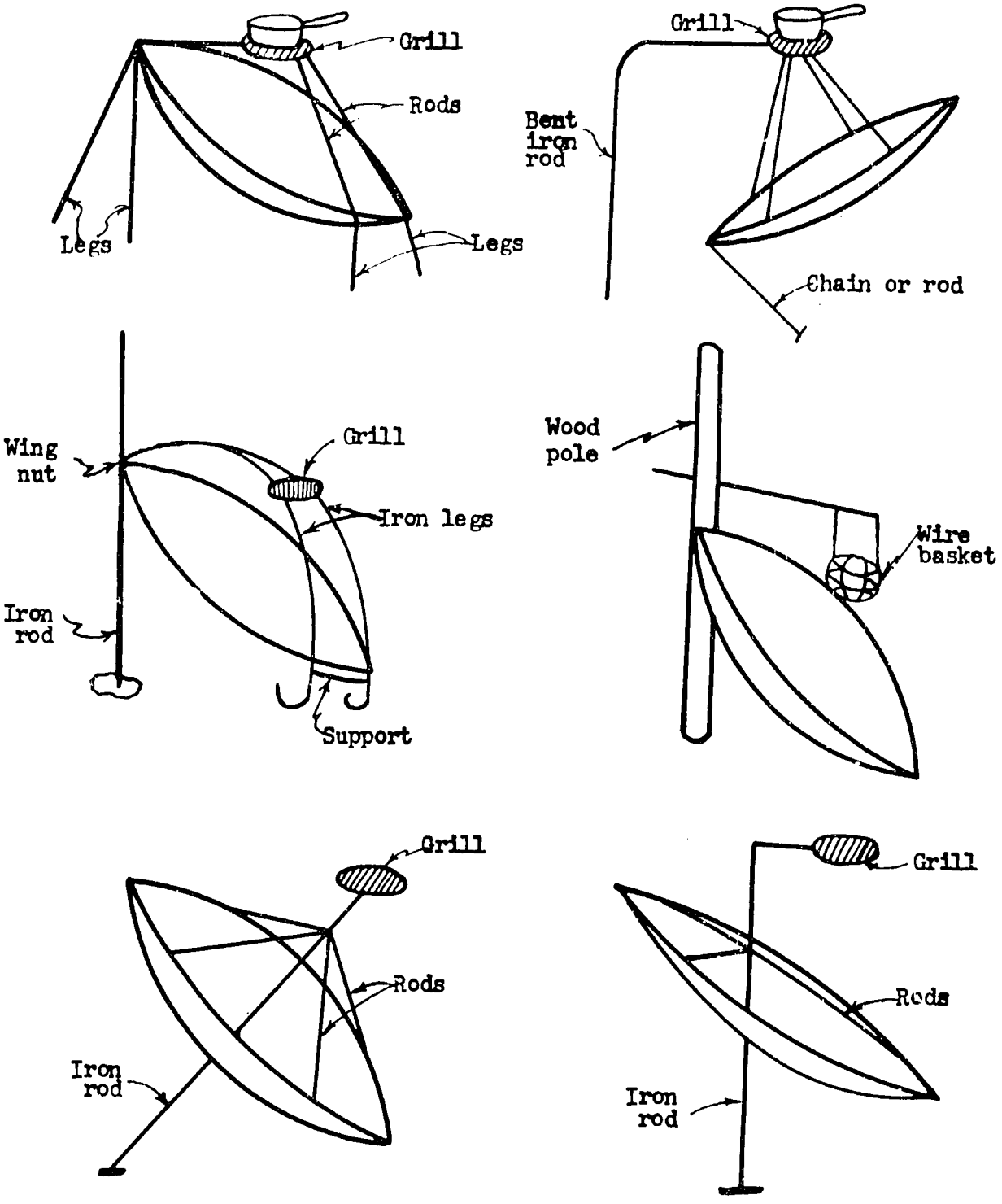

Figure 7. Six arrangements for supporting direct-type solar cookers. (Courtesy of University of Wisconsin).

Pot holders. Almost every solar cooker uses a pot to hold the food being heated. To derive the maximum amount of heat for cooking, the pot must be held in a position close to the focal point of the reflector. If the pot is placed at the exact focal point, the heat will be concentrated on a very small area of the pot. Most solar cookers are designed so the pot is supported in a position somewhat beyond the focal point. The heat from the sun's rays is then spread over a larger area of the bottom of the pot. This produces better conditions for cooking.

When metal tubing or a bar supports the reflector, the pot holder is usually combined with the stand, as shown in Figures 6 and 7. The pot support is circular or rectangular with metal bars forming a grill on which the pot is placed. Some cookers have a wire basket (Figure 7) instead of a grill to support the pot.

Pot holders must be strong and durable. Metal holders are best because they meet these requirements. All modern solar cookers use metal pot holders.

Heat output. The efficiency of a focusing solar reflector is directly proportional to the reflectivity of the reflecting surfaces. Solar cookers concentrate the sun's rays in ratios varying from two to as much as several hundred to one. The heat output of a cooker depends upon both the reflectivity and the concentration ratio of the reflector.

Solar cookers are usually rated in terms of watts (1 watt = 0.0569 British thermal units per minute). The cooker illustrated in Figure 5 delivers about 660 watts to the cooking vessel when the direct radiation of the sun on the reflector is 5 Btu per square foot per minute and the reflectivity of the reflector is 70 per cent. A delivery of about 650 watts is obtained from the cooker in Figure 6 when the reflectivity is 80 per cent. Thus, both these cookers deliver about 37 Btu per minute to the cooking vessel.

The actual heating rates of reflector-type solar cookers depend on factors other than the characteristics of the reflector and the direct solar radiation. Among these factors are the cooking container heat absorption coefficient and the rate of heat loss from the container, particularly by evaporation. With suitably blackened and covered containers, a quart of cold water can be brought

to a boil in about 15 minutes on clear days with the cookers shown in Figures 5 and 6. A net average heat delivery of about 20 Btu per min., in excess of the heat losses from the container, is thus obtained. The reflectors may be used as broilers to cook meats by direct radiation. Steaks or hamburgers may be cooked by direct radiation in 10 to 20 minutes on the reflector shown in Figure 5. Both these cookers are well adapted to boiling, stewing, and frying operations. They have been used for baking after adding a small oven over the focal zone.

Cooker costs. Folding cookers (see Figure 5) cost about $7 to $10 to manufacture. The cooker shown in Figure 6 costs about $6 to $10 to manufacture.

USING SOLAR COOKERS[3]

Reports by personnel visiting underdeveloped areas show that one of the major reasons for a lack of success with solar cookers is a poor understanding of cooker operation. Some scientists and engineers have observed people attempting to use solar cookers in cloudy and overcast weather. Others say no attempt was made to point the cooker at the sun. There are reports that cookers were allowed to be blown about by the wind. Sometimes no attempt was made to keep the reflector clean.

While a solar cooker is not a delicate device it does require some knowledge to operate. The recommendations given here apply to all the solar cookers that have been discussed.

To obtain the best results from any direct-type solar cooker the operator must observe these rules:

1. There must be bright sunshine that casts sharp shadows if rapid cooking is to be obtained.

2. The reflector and pot must be arranged so the bright sun's rays are reflected onto the bottom of the pot.

3. The bottom of the pot must be a dull black color.

4. The pot should be covered during cooking.

5. The reflector and the pot, or just the pot, must be moved every ten to fifteen minutes to keep the sunlight focused upon the pot.

6. The reflector must be kept bright and shiny at all times so the maximum amount of sunlight is reflected onto the bottom of the pot.

Safety precautions.[3] Solar cookers develop high temperatures at the focal point, where the sun's rays are concentrated. If the operator places a piece of paper at the focal point, the temperature is sufficient to ignite the paper. If the operator has his hand or clothing at or near the focal point, he is likely to receive a burn or have the fabric of the clothing ignited. Extreme care is required when handling a cooker in the bright sun.

The operator should keep the reflector covered when the solar cooker is not in use. This eliminates the danger of burns and the accidental ignition of paper, clothing, or other flammable substances. The cover will also protect the reflective surface. Cooker efficiency will be greater for a longer period.

Future use of solar cookers. Continued research will undoubtedly develop cookers with higher heat outputs. Future cookers will probably be easier to transport and store. With the constant development of new materials it is likely that lighter weight and stronger cookers will be developed.

As more people in underdeveloped areas learn the usefulness of solar cookers, greater use will be made of this method of cooking. When better nutrition is provided, the health standards of a country are raised.

Widespread adoption of solar cookers will take time. Since 1954 a parabolic reflector-type solar cooker developed in New Delhi has been manufactured commercially and sold to Indians for about $14. Efforts to introduce the cooker on a wide scale have failed, however, because the villagers prefer traditional cooking methods, and because even this small amount of money represents too great a portion of a family's yearly income. It was reported in 1958 that some 6,000 solar cookers were in use in the U.S.S.R.

Other cooker designs.[13] Numerous other cooker designs have been and are being developed in various parts of the world. A number of solar cooker designs on which data are available are described below.

A parasol-type cooker developed in Japan has its reflective surface coated with aluminum-plated polyester. The forward end of the parasol stem (corresponding to the handle of an ordinary umbrella) holds the pot grill. This grill can be moved to the focus of the cooker. The other end of the stem, behind the reflector, terminates in a horizontal bar which carries a weight to balance the weight of the reflector and cooking vessel. The reflector can turn about the vertical axis and also swing in the vertical plane. At noon on a sunny spring or fall day this parasol-type cooker can cook 700 grams of rice in about 70 minutes or boil two liters of 12° C water in about 60 minutes.

Another design developed in Japan uses a main parabolic reflector with a convex auxiliary reflector. This auxiliary reflector is held in position above the center of the main parabolic reflector by four bars. The sun's rays are reflected by the auxiliary mirror-type reflector through a circular opening in the center of the main reflector. These rays are projected into an insulated box, where the cooking vessel is located.

A third Japanese solar cooker consists of a multiplane mirror-type model of 36 sheets of reflective material. These sheets are arranged in two rows of 18 each, one row behind the other, forming a near-parabolic shape. The cooking pot is placed at the center of the parabola.

Attempts have been made to fit solar cookers with a tracking device so that movement each 10 or 15 minutes is unnecessary. All tracking devices developed to date are far too expensive to be used with ordinary domestic cookers.

SOLAR OVENS[2]

Almost all modern solar cookers use parabolic, spherical, or conical reflectors to concentrate solar radiation on the bottom of a cooking pot. These cookers can perform the usual functions of an oven, such as baking and roasting but they lack certain desirable features. However, special solar ovens have also been developed.

Figure 8 shows a typical solar oven. It consists of (1) an insulated box with a door, (2) double glass covers or windows, and (3) plane-mirror reflectors. Ovens of this design are termed indirect types and are futher classified as triangular, pot, or cylindrical shaped, depending on the configuration.

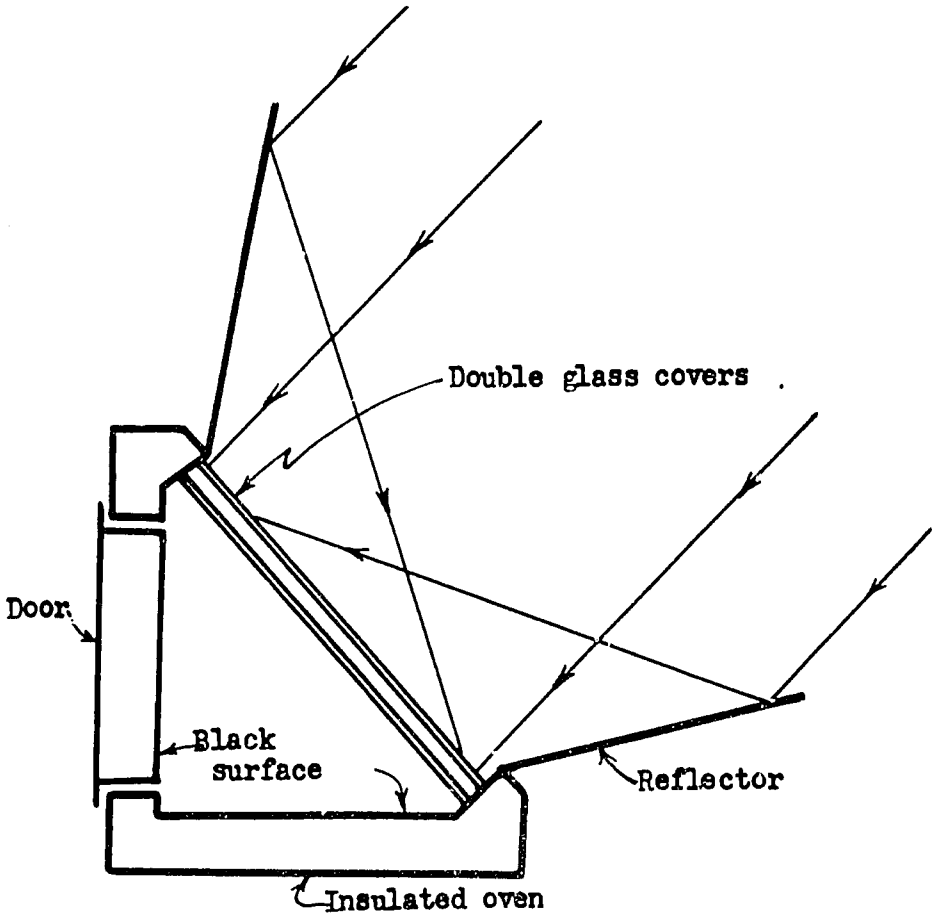

Figure 8. Solar oven fitted with double glass covers. (Courtesy of University of Wisconsin).

Insulated box. The triangular oven shown in Figure 9 is preferably built with an outside skin or envelope of aluminum. Other sheet metal, wood, or even cardboard can be used. The inner oven must be of sheet metal with all the seams well-attached by riveting or double hemming to provide good heat transfer. The windows are mounted in frames made of Marinite or wood. The reflector holder can be attached directly to the top surface, made of aluminum, sheet metal, or wood. The door and door frame are made of

a sufficiently strong and heat-resistant material of low heat conductivity. The space between the inner and outer skins is filled with insulation (glass wool, rock wool, etc.).

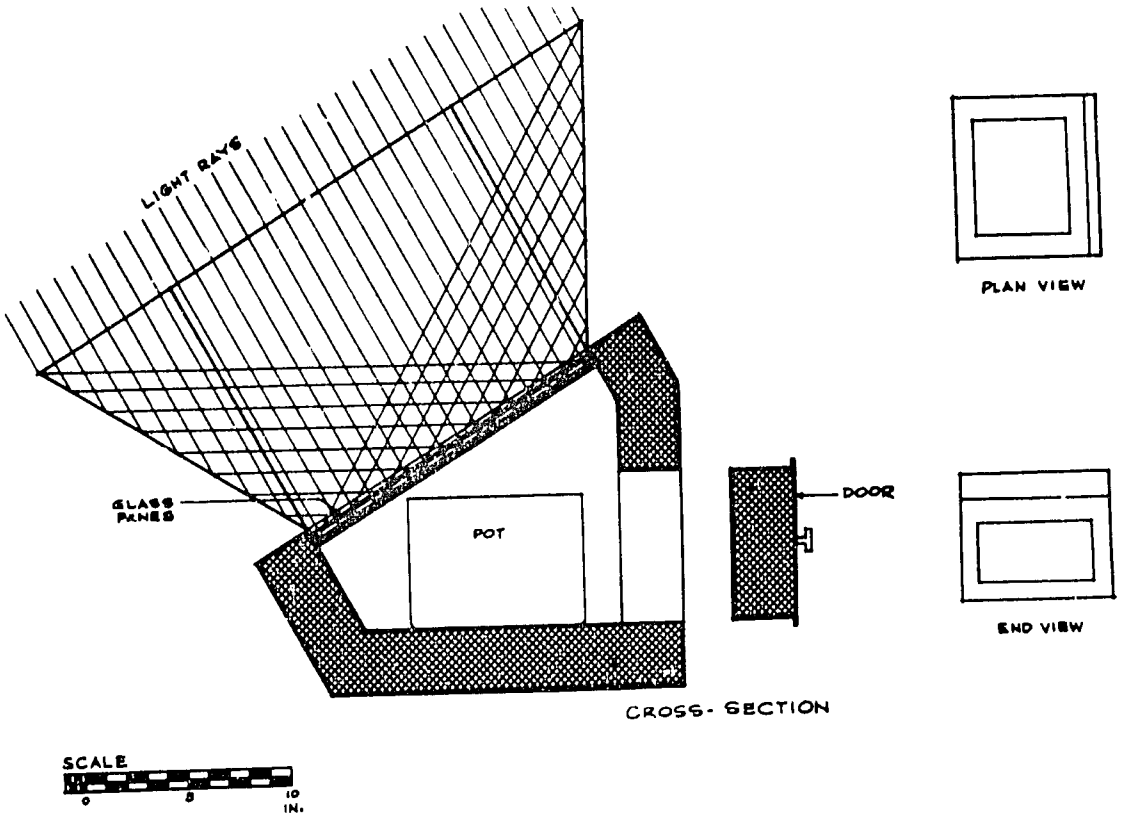

Figure 9. Triangular solar oven fitted with reflectors. (Courtesy of Maria Telkes and University of Arizona).

Pot-type and cylindrical ovens are constructed in a similar manner. Cross-sectional views of these ovens are shown in Figures 10 and 11.

Glass windows. Double-glass windows with about one half an inch of air space between them are commonly used in solar ovens. However, some solar ovens use only a single glass window.

Reflectors. Although plane glass mirrors have been used for solar ovens, this type of reflector has been too heavy and too brittle. Additional framing is also required,

increasing the cost and the weight of the oven. Thin, highly polished aluminum foil is preferred for reflectors. It can be mounted over plywood or some other suitable, low-cost material. The surface of the foil must be protected by a suitable coating. Four flat reflectors are usually used, as shown in Figures 9 through 11.

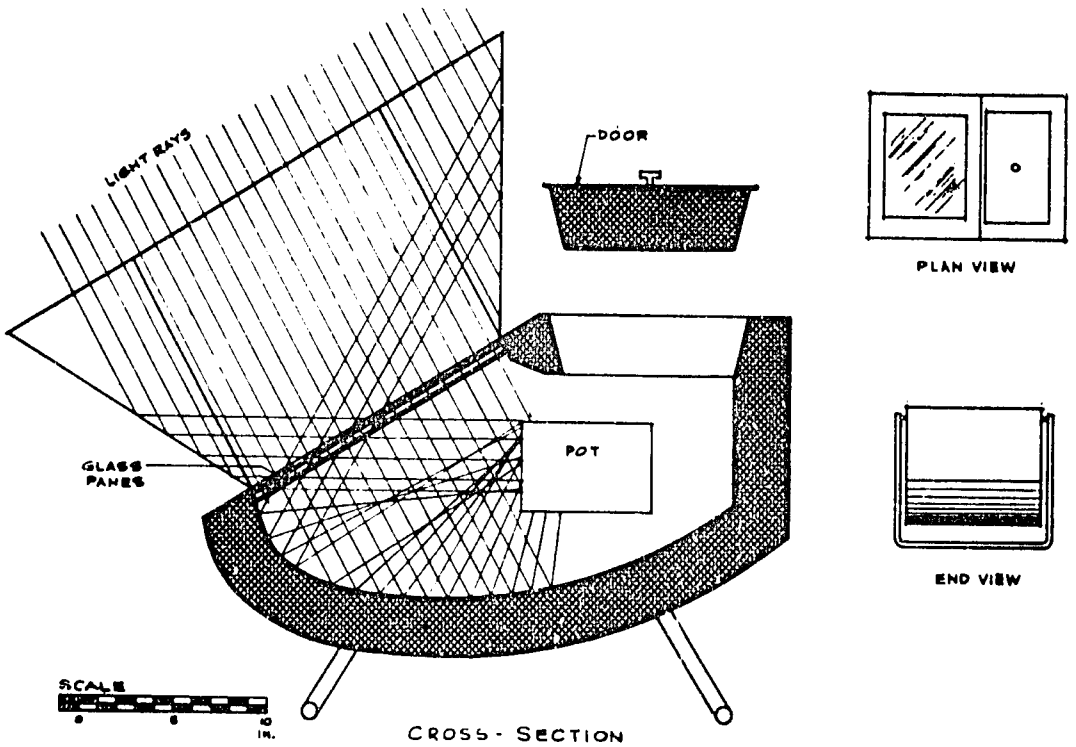

Figure 10. Pot-type solar oven fitted with reflectors. (Courtesy of Maria Telkes and University of Arizona).

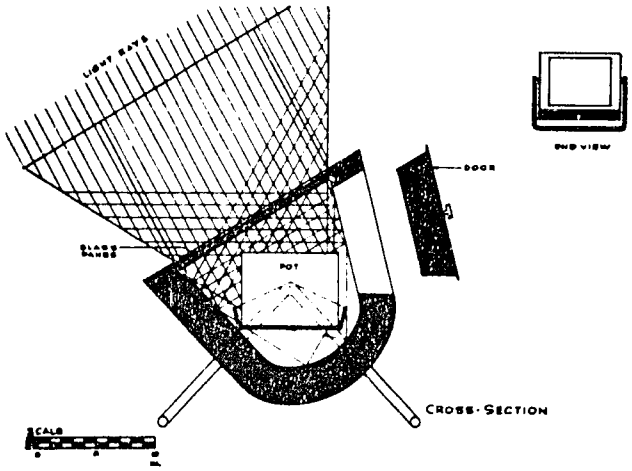

Figure 11. Cylindrical oven with fixed pot and rotating outer shell. (Courtesy of Maria Telkes and University of Arizona).

Triangular ovens. The window of the unit shown in Figure 9 is tilted at an angle of 30 degrees from the horizontal, a favorable tilt for southern latitudes. The triangular oven is relatively simple to fabricate. It can be placed directly on a table or on the ground. A disadvantage of the oven is that it must be tilted by lifting its front or back edge. If this tilt is more than 20 or 30 degrees, food may be spilled.

Pot ovens. Figure 10 shows a typical pot-type oven. Its construction is similar to the triangular oven illustrated in Figure 9. Pot-type ovens are designed to permit cooking "from the top," which is said to be the preferred way, because it is the conventional manner of cooking. A large pot, circular or oval in shape, can swing over a rather wide range, covering at least 60 degrees. The oven is lined with reflecting surfaces to reflect the maximum solar radiation to the pot.

The surface of the pot must be covered with a dull black coating to absorb solar radiation. The contents of the pot become heated somewhat more rapidly than in the triangular oven because heat is delivered directly to the pot. The entire inner surface of the oven is covered by aluminum reflectors which concentrate the energy to the pot or oven

compartment. The door above the pot must fit tightly. The door should be made to lift easily to permit quick access to the pot.

Pot-type ovens were developed to simplify tilting and orientation. The glass window transmits solar energy to the oven interior.

Cylindrical ovens. The cylindrical oven shown in Figure 11 can be oriented to intercept solar radiation while being moved from the vertical to the horizontal position, corresponding to solar attitudes of zero to 90 degrees. This oven has a permanently fixed platen which is always in the horizontal position. The outer part of the solar oven can be rotated around the axis of a stand which supports the permanently fixed part of the oven, as shown in Figure 11.

An advantage of the cylindrical oven is that it can be oriented to face the sun with the utmost simplicity. The food platform is always in the horizontal position; therefore, the food cannot be spilled. The heat-losing surface of the inner oven is small. The heat loss is further decreased by the reflective lining of the inner oven. Such an oven is easily moved; it weighs less than other ovens of the same window area. The cost of this oven is probably less than the other types discussed here.

Cooking with solar ovens.[2] A series of cooking tests have been made with the ovens described here. The results were excellent. Almost all types of foods can be prepared:

1. Boiled foods: Soups, meat or fish stews, rice macaroni, fresh and dried vegetables, jams, and fruit preserves were prepared. When cooked with little added water, vegetables had excellent taste, texture, and color.

2. Baked foods: Breads of all types, rolls, and cakes were baked. Their texture was fine.

3. Roasts: Chickens, meat loaf, pot roast, veal, pork, and roast beef were prepared. Their flavor and tenderness were exceptional.

The cooking time varied with the intensity of the solar radiation. On exceptionally clear days the cooking time was about the same as with the usual gas or electric range. On hazy or partly cloudy days the cooking time

was somewhat longer. Additional tests have been made with special oriental foods, and Navajo Indians prepared their own dishes with these ovens.

Oven temperatures obtained ranged from 380 to 430° F. Larger ovens attain somewhat higher temperatures than smaller ovens. There is no fire hazard with these ovens. They could be used on clear days in many regions where a lack of fuel or their convenience makes them desirable. Ovens weighing 15 to 20 pounds have cooking space sufficient for a family. The window area is usually about 2 square feet.

Oven advantages.[2] Besides the advantages mentioned earlier, solar ovens have several others. These include: An oven can bake or roast, as well as boil foods. An oven requires less exact focusing and orientation than a solar cooker. Inexpensive fabrication methods are suitable. Cooking pots and pans are protected from the wind. It is possible to use an oven in relatively cold weather. Several pots or pans can be used at the same time. Heat can be stored in the oven, allowing food preparation in partly cloudy weather. Food can be kept warm in the oven after sunset.

Oven operation.[2] It is essential that the window of a solar oven always face the sun. The altitude of the sun changes continuously during the day, and the oven must be tilted accordingly. Suitable legs are used to tilt the oven, and the orientation must be changed about every half-hour.

Cooking without stirring.[2] Solar ovens produce a uniform heating of the pot. The temperatures reached in the pot are never high enough to cause scorching of the food.

In conventional cooking a flame reaches the bottom of the pot, and to a lesser extent, its sides. The hot flames or a grill are in direct contact with the bottom of the cooking pot. The heat transfer is very rapid. The bottom and walls of the pot could become incandescent if no food were placed in them. All food must be rapidly stirred when pots are placed directly over a hot flame. This is the reason why cooks lean over pots, stirring briskly

to avoid scorched food and its bad taste. Stirring is unnecessary in solar ovens, and the cook has a chance to do something else while the food is cooking.

SOLAR STILLS

A still is a device used to convert salt (saline) or brackish water to potable water. The process, called distillation, consists of heating the impure water, causing it to change to vapor. This vapor is then condensed back to water. When the vapor is condensed back to water it is called condensate. When brackish water changes to vapor it leaves impurities, salts, and other undesirables in the container. The condensate is pure water and is safe for drinking and cooking. Solar stills hold much promise for supplying potable water in arid tropical areas. They can also supply water for irrigation.

Types of stills. A number of stills have been developed. These include (1) a roof, "greenhouse," or triangular type,[5] Figure 12, (2) a flat tilted type, Figure 13, (3) a flat tubular type, (4) a supended-envelope type[6], Figure 14, (5) a spiral still, and (6) an air-inflated still.

The greenhouse still, Figure 12a, consists of a pan with a black bottom to hold the salt water, a glass cover to allow the sun's rays to enter the still, condensate collecting troughs, insulation under the pan, and a tight enclosure to prevent the water vapor from escaping. The back of the still is lined with a mirror or reflective material.

Sunlight enters the still through the glass cover and heats the salt or brackish water. The heat absorbed by the water causes the vapor to form. This vapor collects on the glass cover and the back of the still. Since the glass and the back of the still are cooled by the air outside the still, they are at a lower temperature than the vapor. This temperature difference causes the vapor to condense back to water. This pure water trickles down the underside of the glass cover and the inside of the back of the still. The water flows into the collecting troughs which slope towards one end of the still. Holes at the end of the still allow the pure water to flow out of the still to collecting containers.

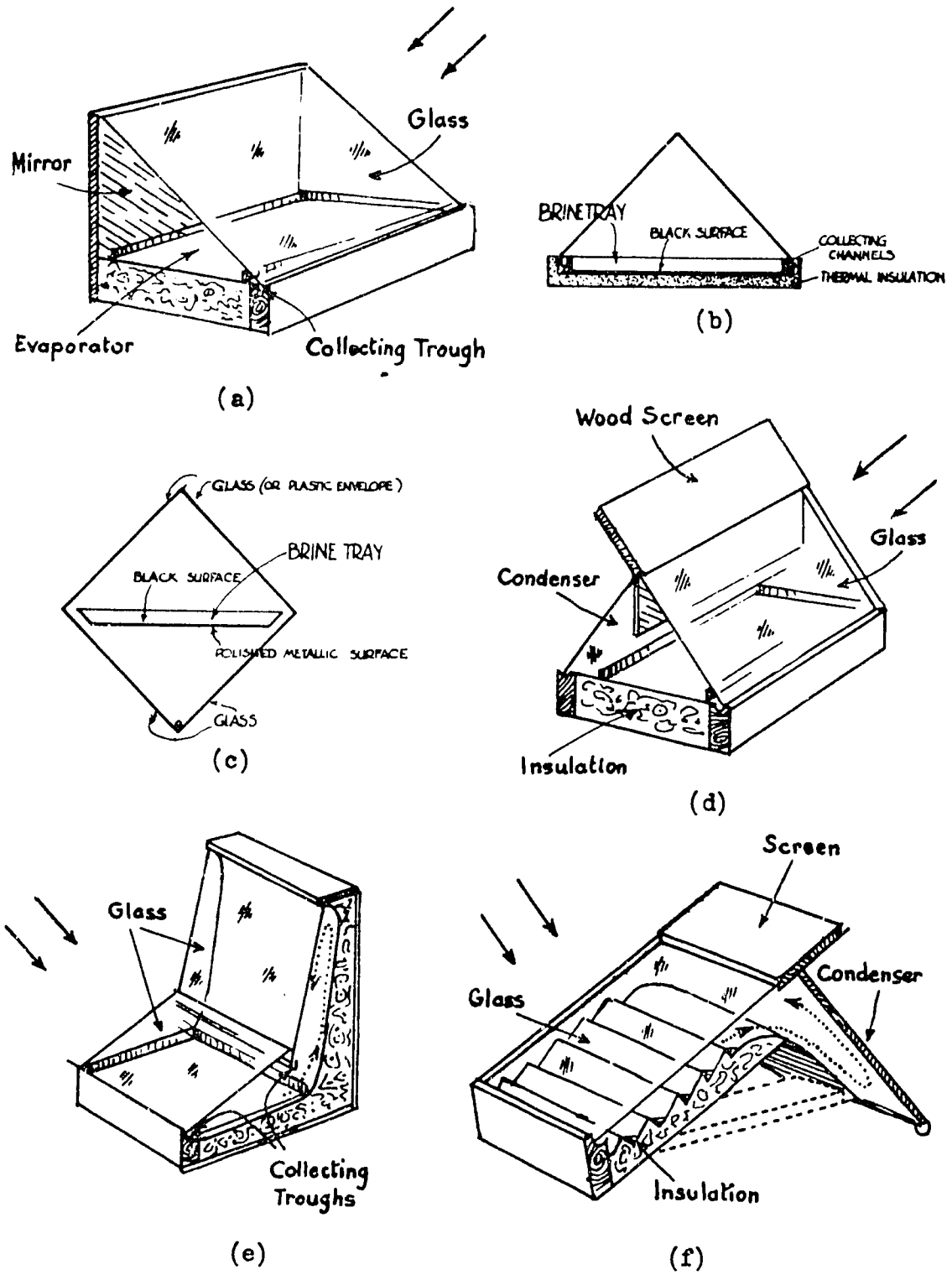

Figure 12. Six designs of solar stills. (Courtesy of I. Tanishita, R. Lappala, J. Bjorksten, and University of Arizona).

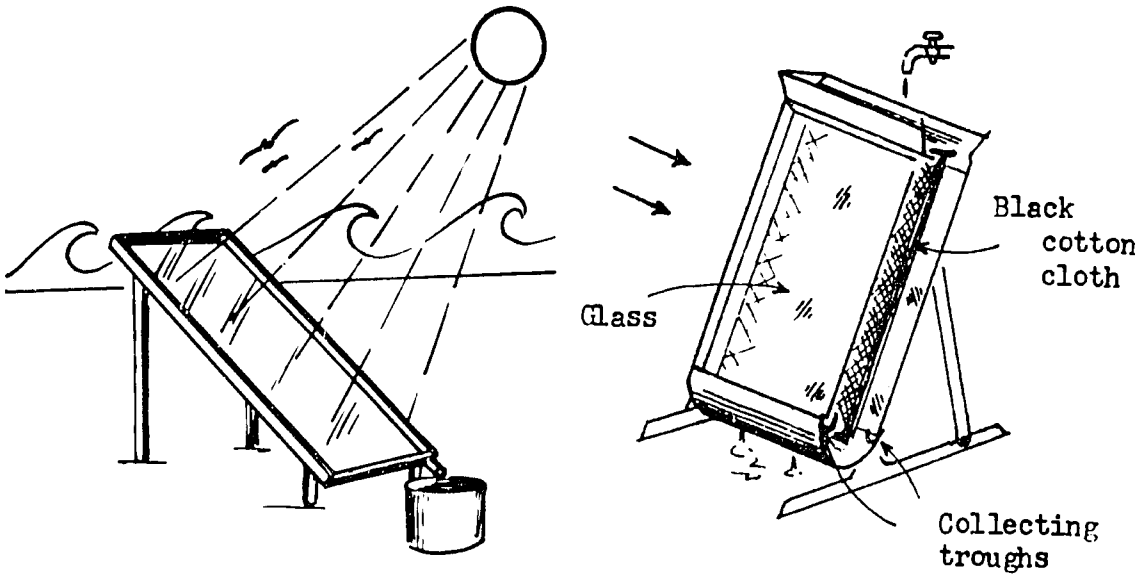

Figure 13. Two types of inclined solar stills. (Courtesy of Jet-Heet, Inc., I. Tanishita, and University of Arizona).

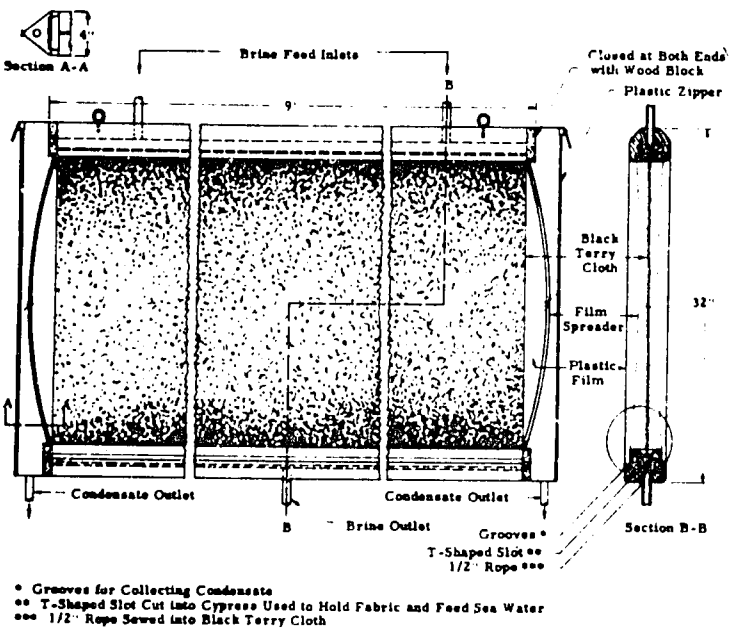

Figure 14. Suspended-envelope type plastic solar still. (Courtesy of R. Lappala, J. Bjorksten, and University of Arizona).

For best results the still must be nearly air-tight [2] to prevent vapor from escaping to the outside air. Insulation under the pan is usually two or three inches thick to prevent heat losses from the pan to the ground under the still.

This type of still is operated by placing it in a level position and filling the pan with water to a depth of three fourths to one inch. In the morning the sun's rays will heat the water in the pan. Distillation will continue to sundown, if shade or clouds do not obscure the sun. An 8-foot long, 2-foot wide still of this type will produce more than a gallon of potable water from salt water on a sunny day.

Greenhouse or triangular stills are built with various cross-sectional shapes. Studies show that a symmetrical end section, Figure 12b, produces more distilled water than the type in Figure 12a. Likewise, a rectangular end section, Figure 12c, is more productive than either triangular type. Other variations of the triangular design are shown in Figures 12d, 12e, and 12f. In a recent large installation of a triangular-type still, concrete bays were placed directly on the ground without bottom insulation. A water depth of 1 foot was used, instead of the usual one to two inches. The glass covers of this symmetrical still were sloped at 10 to 15 degrees, instead of the usual 30 degrees or more. In other recent tests plastic covers have been used instead of glass for triangular stills.

Flat tilted still. This type, Figure 13, consists of a tightly fitted glass-covered frame equipped with a black cotton, loose-woven cloth. The wet cloth is stretched between two glass plates. The front plate transmits the sun's rays to the cloth, while the rear plate acts as the condenser. A collecting trough and outlet pipe are fitted to the bottom of the still. Water is fed to the cloth by a perforated pipe.

Distillation occurs in the same manner as in the triangular still. Vapor is formed when the salt or brackish water on the cloth is heated by the sun. This vapor condenses on the back plate and flows down to the trough. The pure water is collected in a container outside the still. Additional brackish water is fed into the top of the still, when necessary.

Plastic stills. These may be tubular, envelope, or spiral shaped. They are made of plastic and operate by vaporizing impure water and condensing the vapor to potable water. Several new plastics, particularly Teflon, have proven well-suited for still use. Some of these plastics are estimated to withstand ten years of outdoor exposure. Other useful plastics include Mylar and Teslar.

In the envelope-type still, Figure 14, a piece of black terry cloth is used to retain the salt or brackish water while it is being evaporated. A steel or manila rope is used to support the still. Water is distributed over the entire piece of terry cloth by a perforated piece of plastic tubing. The tubing is kept about half full of water at all times, providing a constant flow to the cloth as water is evaporated. In a test this still produced about 0.12 gallons of potable water per day per square foot of still area. This still does not need any insulation under it and has withstood winds of 50 miles per hour. Condensation can take place on both the front and rear of the still. Scientists estimate that plastic solar stills should produce potable water from sea water for substantially less than one dollar per thousand gallons.

Still performance. Solar stills are being used in a number of areas throughout the world. Lemon and orange trees have been watered with the output of solar stills in Cyprus. In Australia, solar stills demineralize water from artesian wells. The output of the stills is used in automotive storage batteries. A 48-square foot area still with a glass collector over a black plastic trough produces up to eight imperial gallons of potable water per day. Recently, commercial solar stills were produced by an Algerian firm and tested under Sahara Desert conditions. Made of asbestos concrete, these stills have reduced the price of distilled water to one franc per litre.

The potable water yield of a solar still varies with its type of construction, its location on the earth, its efficiency, and other factors. Triangular type stills covered with glass have produced 0.1 gallons of water per square foot of glass area in a region having a solar intensity of 2150 Btu per day. When using treated polyvinyl chloride instead of glass, these stills produced 0.09 gallons per square foot of glass area. With an estimated life of three years either still would produce potable water at a cost of about $0.85 per 1,000 gallons.

Triangular stills fitted with collecting troughs must be arranged so the water trickles out of the trough into a suitable container. This may require that the still be carefully supported so the troughs slope toward the outlet end.

The efficiency of a still, regardless of its type of construction, is often stated in terms of the ratio of the average yield per day to the total solar energy available during the day. Efficiencies commonly reported vary from about 10 per cent to about 72 per cent. The yield of a given still depends upon the type of construction, the wind velocity, the air temperature, and other variable factors.

Future of solar stills. Extensive studies by government, universities, and private industries in the United States give much hope for the future of solar stills, particularly for supplying drinking water in underdeveloped areas. Developments indicate that future stills will (a) use more low-cost, lightweight plastics, (b) use less or no insulation, (c) use less wood, and (d) be less expensive. New materials will provide a longer useful life for the still. Solar stills will probably be the second most popular use of solar energy in underdeveloped areas. (Solar cooking appears to be the most popular use at present.)

One vexing problem that remains to be solved in the use of solar stills is the formation of salts on the surface of the water being evaporated. Calcium sulphate and calcium carbonate are the most troublesome. If the crystals sink to the bottom of the pan or other container they do not cause trouble. If the crystals form on the surface of the water, the entire free surface may soon be covered by a white film that reflects light and seriously diminishes the output of the still. Various additives for use with brackish water are being studied. These include surface tension depressors and adsorption or complexing agents. The first type of treatment retards crystal growth, while the second causes the crystals to sink harmlessly to the bottom of the pan.

As an example of the newer still designs being studied, experiments were recently completed on the solar distillation of salt water in plastic tubes using a flowing air stream. Air is swept along the surface of the solar-heated water, and the water vapor is removed in a water-cooled condenser. The solar distillation efficiency of

this still was 20 to 40 per cent, based upon hourly performance and upon the area of the water surface intercepting the radiation.

Another new installation uses inflated plastic covers. It is now producing about 100 gallons of potable water per day.

SOLAR WATER HEATERS

Solar hot water heaters are used in France, Africa, Australia, U.S.S.R., the West Indies, and to a lesser extent, in Florida and California in the United States. Large-scale heaters are being installed in a number of Mediterranean countries. In Israel, units of 300- and 500-litres capacity are installed in industrial plants and hospitals. Several hundred heaters of 100- and 200-litres capacity are used in the principal cities of Morocco.

Types of water heaters.[3] Solar water heaters are available to heat water for homes, restaurants, hospitals, industrial plants, laundries, and swimming pools. The most popular type of water heater used today consists of three parts: (1) an absorber or collector arranged to face the sun, (2) tubing to convey the water to and from the absorber, and (3) a storage tank to store the heated water.

Flat plate absorbers, Figure 15, are commonly used. An absorber of this type can be mounted either on a frame supported on the ground or on the roof of the building being supplied hot water. Where the slope and orientation of the building roof are suitable, the flat plate collector may be mounted directly on the roof surface, or it may be built into the roof, as a part of the structure. In some modern buildings and homes the absorber is installed on the side of an exterior wall where it acts both as a heat absorber and as a sun shade over the windows or a porch.

The absorber or collector, Figure 15, is a metal or wooden box. It must be deep enough to contain two or more inches of insulation (rock wool, fiberglass, etc.) and the copper tubing for conveying the water. An air space of about one

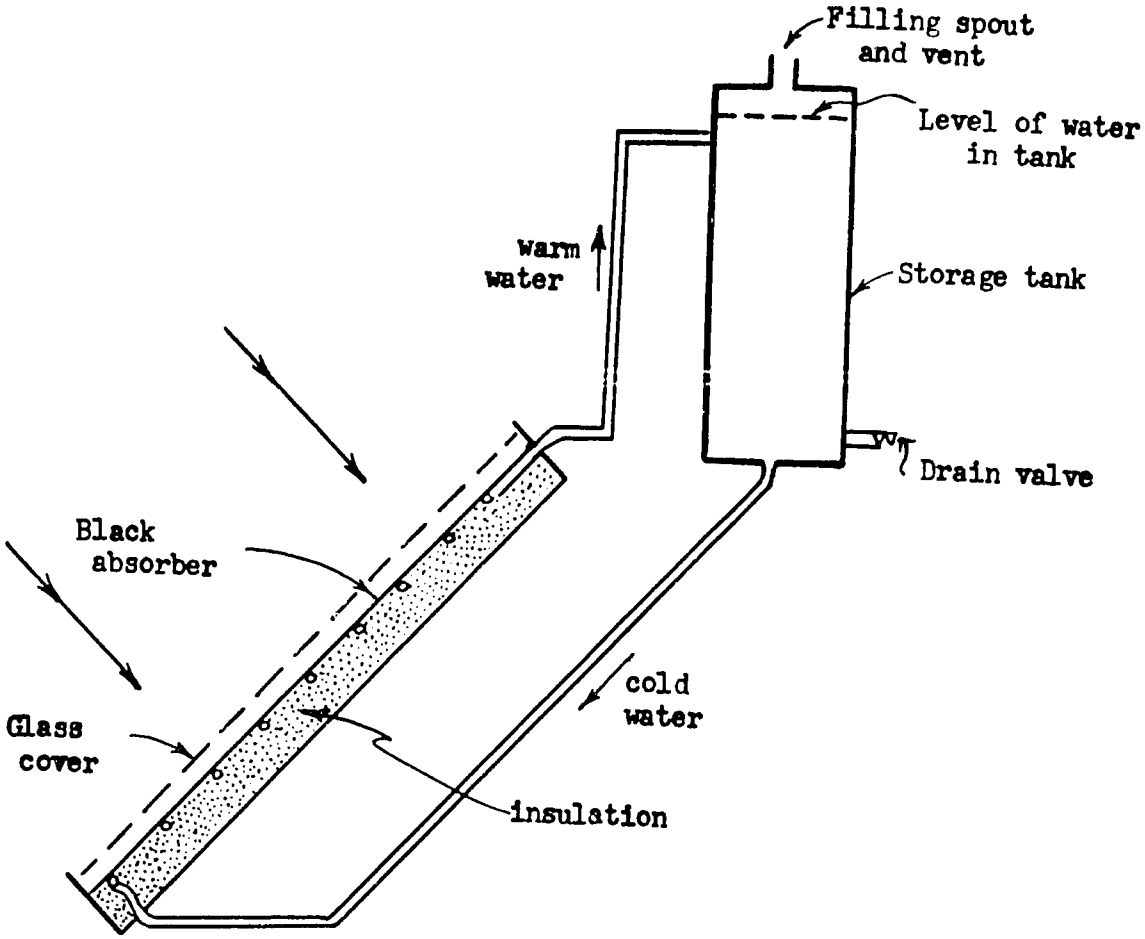

Figure 15. Flat plate type solar water heater, showing the piping and storage tank. (Courtesy of University of Wisconsin).

inch is needed between the tubing and the single glass cover of the absorber. The copper tubing, formed into a sinusoidal or other pattern, is soldered to the back of a copper plate. (In some absorbers the tubing is soldered to the front of the plate.) Tubing is usually 3/8 inch diameter, or larger. To ensure the maximum absorption of solar energy, the plate and tubes are painted with a flat black paint. Absorbers may be as small as 2 x 3 square feet. Common sizes used are 4 x 8 square feet, 4 x 12 square feet, and larger.

When the heater is operating, the sun's rays heat the water in the absorber tubes. The heated water becomes lighter. Cold water in the bottom of the storage tank is heavier than the heated water. This difference in weight causes the warm water to rise and enter the top of the storage tank. A continuous circulation of water is thereby established. Once a day, or oftener, depending on the amount of water used, the storage tank is refilled. The best circulation is obtained when the bottom of the storage tank is above the top of the absorber. In some designs the bottom of the tank is two to four feet above the top of the collector.

The storage tank must be insulated to prevent excessive heat losses to the atmosphere. Some Australian water heaters use four inches of mineral wool insulation on the exterior of the storage tank. In Florida[7] domestic solar water heaters having about 20 gallons of tank capacity per person per day are usually specified. The storage tank can be installed in a false chimney or other structure on the roof of the building.

Recent attempts have been made[7] to increase the temperature of the water obtained from heaters like that in Figure 15. The maximum water temperature obtainable with a flat plate absorber of this design is less than 200° F. Freezing weather may damage the absorber if it is not drained or heated by some auxiliary means. A number of techniques to raise the water temperature and reduce the danger of freezing have been developed.

Higher water temperatures are obtained by using two or more thicknesses of glass over the absorber. This reduces the loss of heat from the absorber and produces a higher water temperature. However, the greater glass thickness reduces the amount of heat entering the absorber and other schemes are being developed.

An inexpensive design recently developed[7] has parabolic-shaped troughs through which the water tubing is run at the focal line. These troughs replace the flat plate of the absorber previously described. A rather expensive focusing arrangement uses a mirror to focus the sun's rays on the absorber. The mirror is automatically controlled so it follows the sun. Water temperatures of over 500° F. can be produced by this scheme. However, the automatic controls are too expensive for general use, and the trough arrangement is preferred, even though the temperatures obtained are not high.

Two new techniques to prevent freeze damage[7] are now used. In the first technique the absorber is fitted to heat water containing antifreeze. This heated solution is circulated to a heating coil in the storage tank. In this coil the solution gives up its heat to the contents of the tank and then returns to the absorber for further heating. In the second technique the heated solution is circulated to a double-walled tank. The solution passes between the inner and outer walls of the tank, giving up its heat to the stored water in the inner tank. This design is efficient and inexpensive.

Open types of solar water heaters, Figure 16a and 16b, are widely used in farm houses in the Nagoya area of Japan.[8] These heaters consist of a shallow wooden box of about 3 x 6 feet faced on the inside with thin sheet metal and filled with water to a depth of four inches. The box is covered with a single or double glass cover with an air clearance of about one inch between the water surface and the cover. A heater with a double-glass cover is shown in Figure 16b. It is reported that heaters of this type can save 1.5 tons of rice straw fuel per year which can then be used as fodder for cattle, or as a fertilizer. Water warm enough for bathing is obtained on sunny days from April to September. The hot water from the solar heater is also used in farmhouses for cleaning, washing, and to wet seed bed soil in the winter. Simple and low-cost (about $20), this heater is used in more than 20,000 Japanese farmhouses.

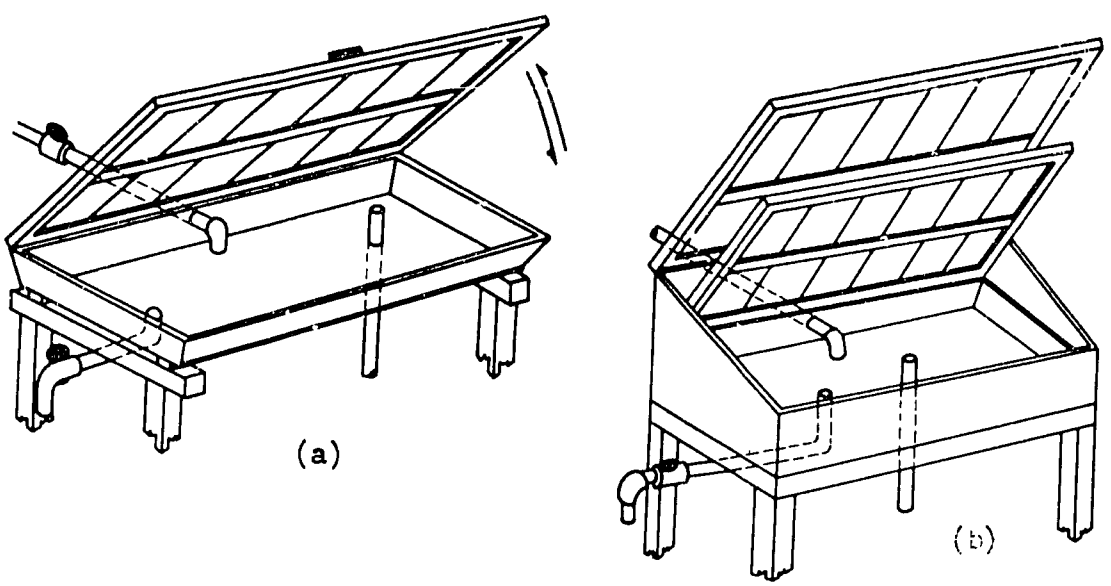

Figure 16. Two roof type solar water heaters. (Courtesy of I. Tanishita and University of Arizona).

In other districts of Japan the closed-type heater, Figure 17, is used. It is built as a grate of sixteen 4-inch pipes. The heater is placed directly on the inclined face of the roof. The upper half of the pipe is coated with black paint. The collector is not usually covered with a glass plate. The cost of operation and the performance is about the same as the units shown in Figure 16.

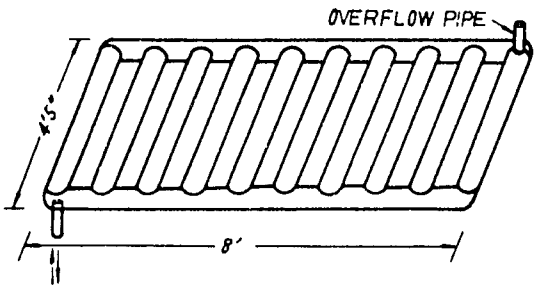

Figure 17. Tube or grid type solar water heater. (Courtesy of I. Tanishita and University of Wisconsin).

When the heater illustrated in Figure 16 is covered with thin sheet metal and placed on an inclined surface, it becomes a closed chamber-type heater, as shown in Figures 18 and 19. In these heaters a low water pressure is developed internally. A saw-tooth section, Figure 18, can be used to sustain this pressure. Internal stays, Figure 19, are

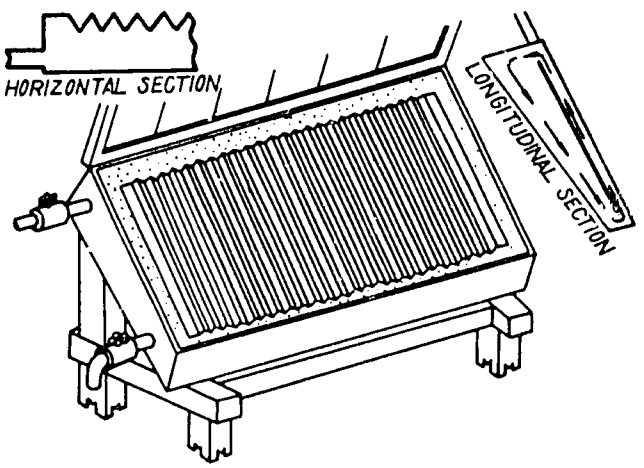

Figure 18. Roof type solar water heater. (Courtesy of I. Tanishita and University of Arizona).

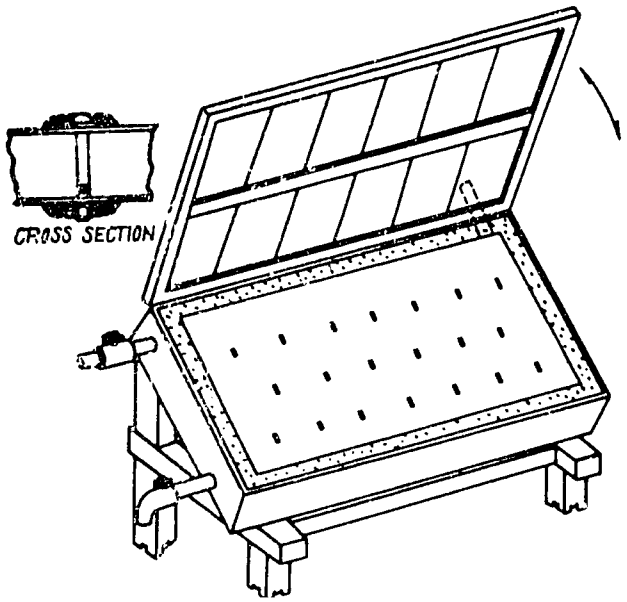

Figure 19. Roof type solar water heater. (Courtesy of I. Tanishita and University of Arizona).

also used to sustain the pressure. Both these heaters have glass covers with an air clearance of about one inch. Sometimes a wooden or ceramic plate is inserted in the water chamber, as shown in the longitudinal section of Figure 18. This plate promotes a convection current in the water chamber, increasing the heating effect.

Figure 20 shows an apartment-house solar water heater used in Japan. It uses thirteen 3-inch pipes six feet long with rectangular headers at each end. The heater is placed in a horizontal position on the roof and has a glass cover. These heaters cost about $200.

In Australia[9] flat-plate type solar water heaters with thermostatically controlled collectors having a temperature regulating valve are being studied. Under favorable conditions these units are more efficient than the ordinary flat plate heaters.

A number of other solar water heater designs are being developed. These include units with parabolic-type reflectors and tracking apparatus to cause the heater to follow the motion of the sun.

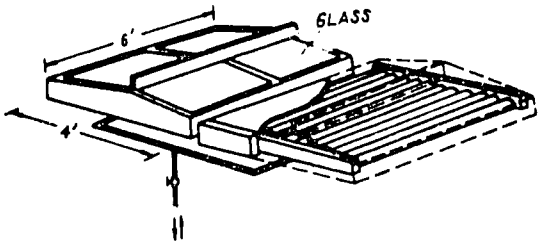

Figure 20. Roof type solar water heater for large heating loads. (Courtesy of I. Tanishita and University of Arizona).

OTHER USES OF SOLAR ENERGY

Solar energy is used for several other tasks in underdeveloped areas. These tasks include pumping water, space heating, space cooling, and power generation. Each application holds promise for future development.

Pumping of water. The usual method adopted for pumping water by solar energy combines an absorber for generating steam with a turbine or engine. A simple reaction turbine,[10] Figure 21, has shown promise as a pump prime mover. Steam is delivered by a solar boiler to the turbine at a pressure of 50 pounds per square inch absolute. Entering the inlet pipe, Figure 21, the steam passes through the nozzle and discharges through the outlet to the atmosphere. The reaction of the steam when passing through the nozzle produces a continuous rotation of the turbine rotor.

When used to drive a centrifugal pump, a turbine pump unit delivered 730 gallons of water per hour against a head of 12 feet when the steam pressure was 50 psia and the turbine speed was 1800 rpm. With a steam pressure of 65 psia and a speed of 2100 rpm the pump delivered 1120 gallons per hour. While the efficiency of this turbine is slightly less than the efficiency of other steam units, its low cost, simple design, simple maintenance, and high reliability make it well suited for use in underdeveloped areas.

The solar boiler for such a turbine uses a spherical reflector to concentrate the sun's rays. However, any type of solar boiler could be used, provided it delivered steam at

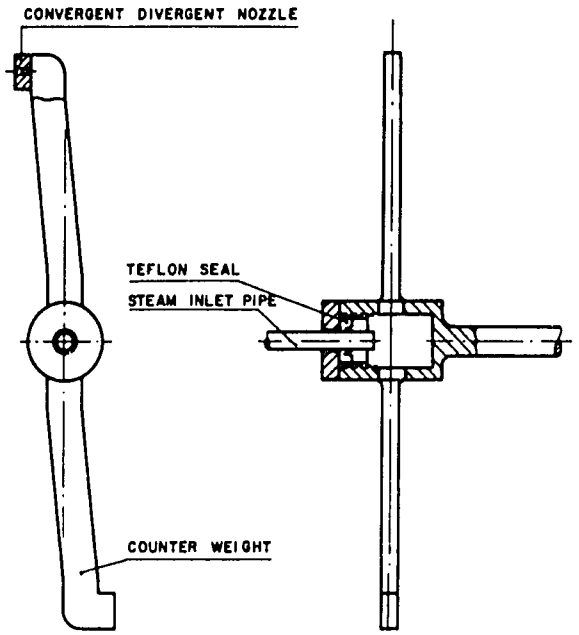

Figure 21. Reaction turbine for driving a solar-powered water pump. (Courtesy of S. T. Hsu, B. S. Leo, and University of Wisconsin).

a pressure of at least 50 psi. Figure 22 shows a typical parabolic tilting solar boiler. The steam generating tube is placed at the collector focus. The collector is easily tilted to take maximum advantage of solar radiation. The flat plate tilting solar collector, Figure 23, is fitted with a pump that continuously circulates a heat absorbing liquid. This liquid passes through a tubular heat exchanger where it gives up its heat to generate steam.

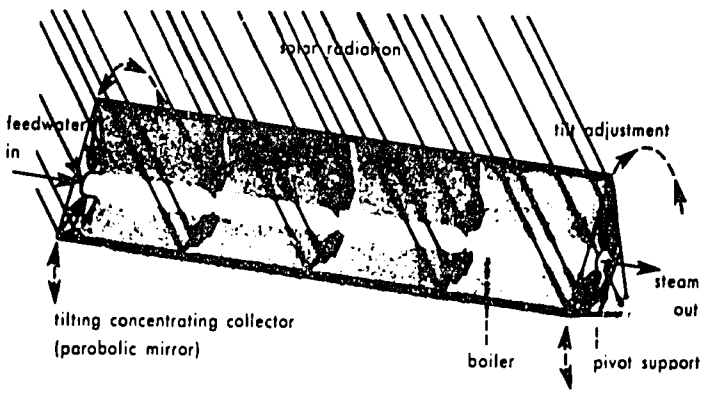

Figure 22. Flat plate type solar boiler. (Courtesy of Power magazine).

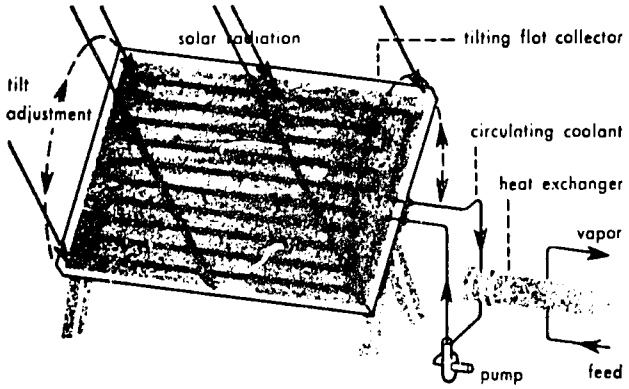

Figure 23. Concentrating type solar boiler. (Courtesy of Power magazine).

Figures 24 and 25 show two designs of a thermopump useful for delivering water or other liquids. A solar collector can be used to deliver energy to the generator. Where electricity is available to heat the generator, a coil can be wrapped around the generating tube, as shown. Flat plate collectors are popular for delivering energy to pumps of this design.

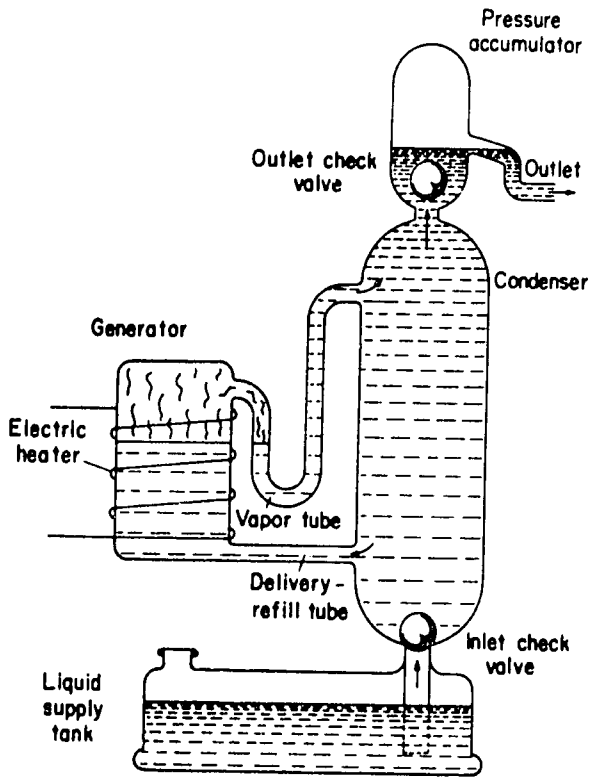

Figure 24. Basic parts of a thermopump. (Courtesy of Jet Heet, Inc., and University of Arizona).

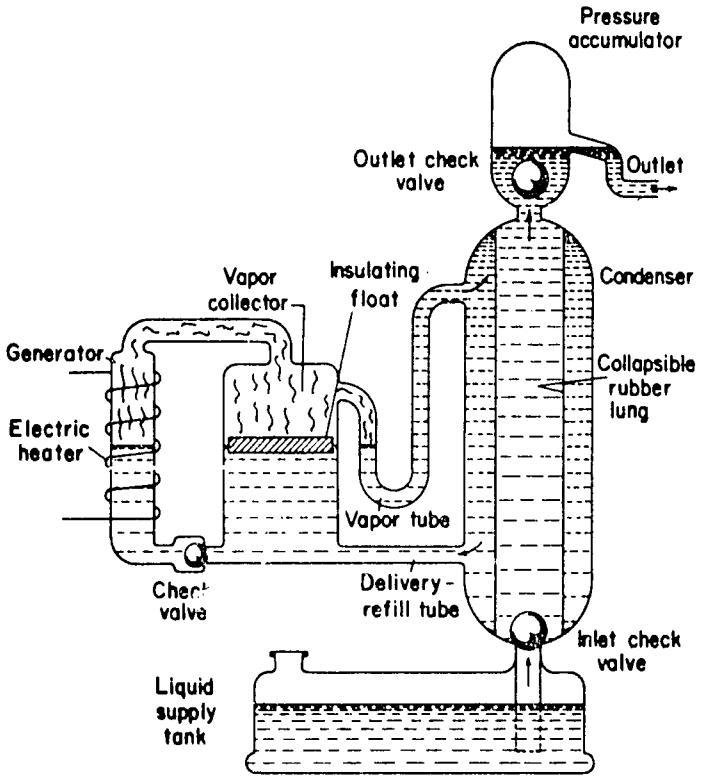

Figure 25. Self-priming type thermopump. (Courtesy of Jet Heet, Inc., and University of Arizona).

Figure 26 shows how the flat plate collectors are arranged. The support or stand is made of iron rods.

A recent method[12] proposed for "pumping" water by solar energy delivers drinking water from the air by condensing the water vapor present. Figure 27 shows a structure devised to alternately heat and cool the air, producing the desired condensation. In the Sahara Desert pumps of this type have produced drinking water at humidities of less than five per cent. This type of unit is referred to as a simultaneous solar water pump.

In another application, called successive solar water pumping, a cover is opened above the absorbent material during the evening hours. In the Sahara this arrangement has produced 0.16 to 0.20 quarts of water per square foot of productive surface per day. Developed in West Germany, this equipment is now being perfected.

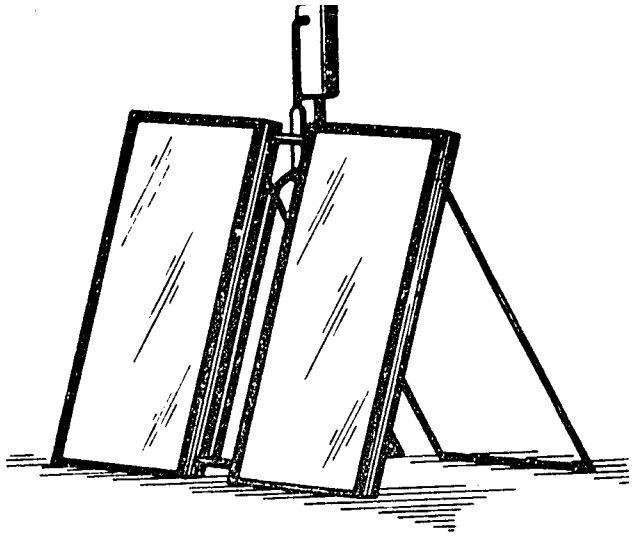

Figure 26. Thermopump fitted with twin flat plate absorbers. (Courtesy of Jet Heet, Inc.).

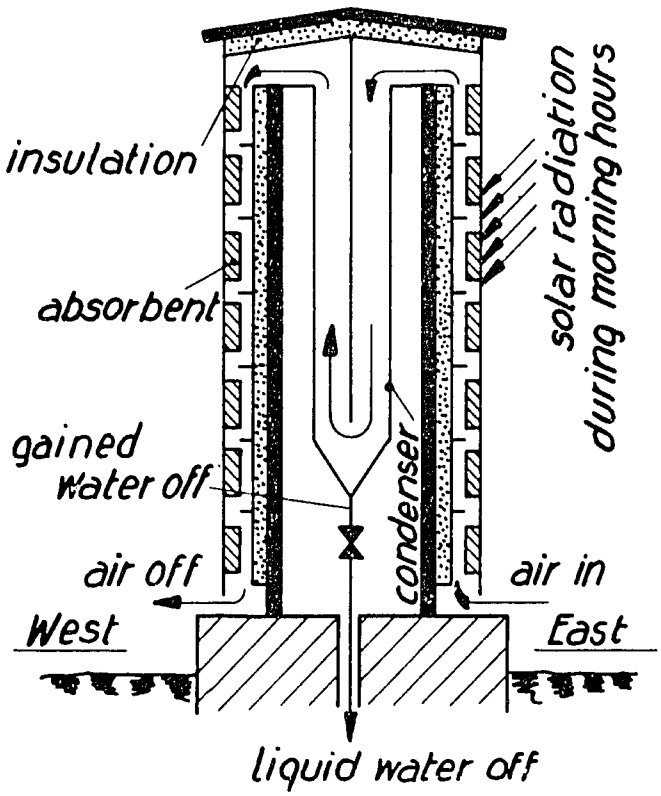

Figure 27. Simultaneous water pump. (Courtesy of J. H. Dannies and The Association for Applied Solar Energy).

Other new developments in power sources for pumping water include a one horsepower thermo-electric generator built in the U.S.S.R. Using semi-conductors heated by a 2-meter diameter parabolic mirror this device has produced up to 40 watts of electrical energy.

In Japan a parabolic searchlight reflector with a 110-centimeter diameter focuses the sun's rays on a small boiler. The steam generated is piped to a reciprocating steam engine which can be used to drive a water pump. Also developed in Japan is a diaphragm-type water pump using solar energy to evaporate a fluid such as Freon. The alternate evaporation and condensation of the Freon produces a movement of the diaphragm. This movement is translated into a reciprocating pumping motion. A more effective pumping action is obtained if the heating surface is sprinkled with water when the sun's rays are shut out.

Solar space heating.[13] Solar space heating has been the subject of extensive study. Space heating is a logical application of solar energy because (a) the temperatures required are low enough (100° to 150° F.) to permit the use of flat plate collectors, (b) the solar energy reaching a dwelling during the winter in most temperate climates is more than the energy needed for comfort heating, (c) there is no requirement for the conversion of thermal to other forms of energy, and (d) comfort heating is a major user of conventional fuels.

Flat plate heat exchangers are popular for solar heating because they are easily made as a part of a building's roof, its side, or other portion of the structure. The heat collection of one square foot of a flat plate solar exchanger at a rate of 150,000 to 300,000 Btu per annual heating season (variable with the length of the heating season), represents an output per square foot of exchanger surface ranging from 11¢ to 60¢, based on a value of delivered heat of $0.75 to $2.00 per million Btu. At a fixed cost of 10% per year, an expenditure of $1.10 to $6.00 per square foot could be a justifiable investment for the collector and its associated equipment.

House heating flat plate exchangers can be fabricated from glass, sheet metal, and heat insulation. The cost of these materials in most proposed designs totals less than one dollar per square foot of collector. The labor cost for fabricating the solar collectors for the few

solar houses built to date have been many times the material cost.

For a practical solar heating system, heat storage must also be provided. This may be provided by a liquid (hot water), a solid (crushed rock), or a change-of-state material(such as water to steam). With a heat storage capacity equivalent to a day's solar collector delivery capacity, the cost of heat-storing equipment should be much less than that of the solar collector. Auxiliary equipment such as fans, ducts, piping, and control instruments, where required in addition to the conventional system, will add further cost to the installation. However, it appears that collectors and the associated equipment can be built in quantity for costs within the range of $1.00 to $6.00 per square foot. The development of solar space heating systems appears attractive for a variety of structures.

Figure 28 shows a typical solar heated house fitted with flat plate roof collectors. A 1500-gallon storage tank in the basement stores the heated water. To heat the house, the hot water is pumped through a heat exchanger, which functions like an automobile radiator to transfer the heat to a stream of air blown over the coils. This warmed air is then forced through ducts and registers to heat the living spaces.

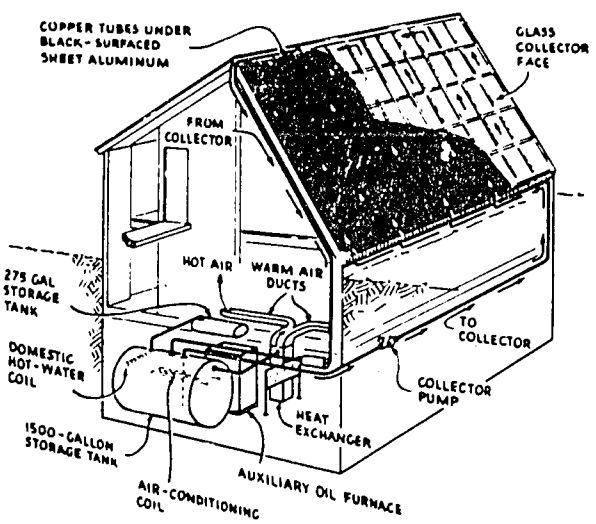

Figure 28. Solar heated house. (Courtesy of the Massachusetts Institute of Technology and The Association for Applied Solar Energy.)

Many other designs are available for solar heated homes and commercial buildings. Constant study and development are increasing the efficiency and effectiveness of solar heating systems.

Solar space cooling.[1] Areas with an abundance of solar energy usually have uncomfortably warm summer temperatures. Solar space coolers are practical in these areas. Heat-operated refrigeration units using the absorption principle work within the range of operating temperatures of solar heat exchangers. Comfort cooling by solar energy can be associated with a solar heating system. If used for both purposes, the allowable cost of the solar heat exchanger would be greater than for either of the separate purposes because it would collect useful energy over a greater part of the year. In Dakar, for example, the cost of electricity for air-conditioner operation is ten times as great as in the United States. This permits a substantial increase in the allowable investment in solar cooling facilities. Figure 29 shows a typical continuous solar absorption air conditioner.

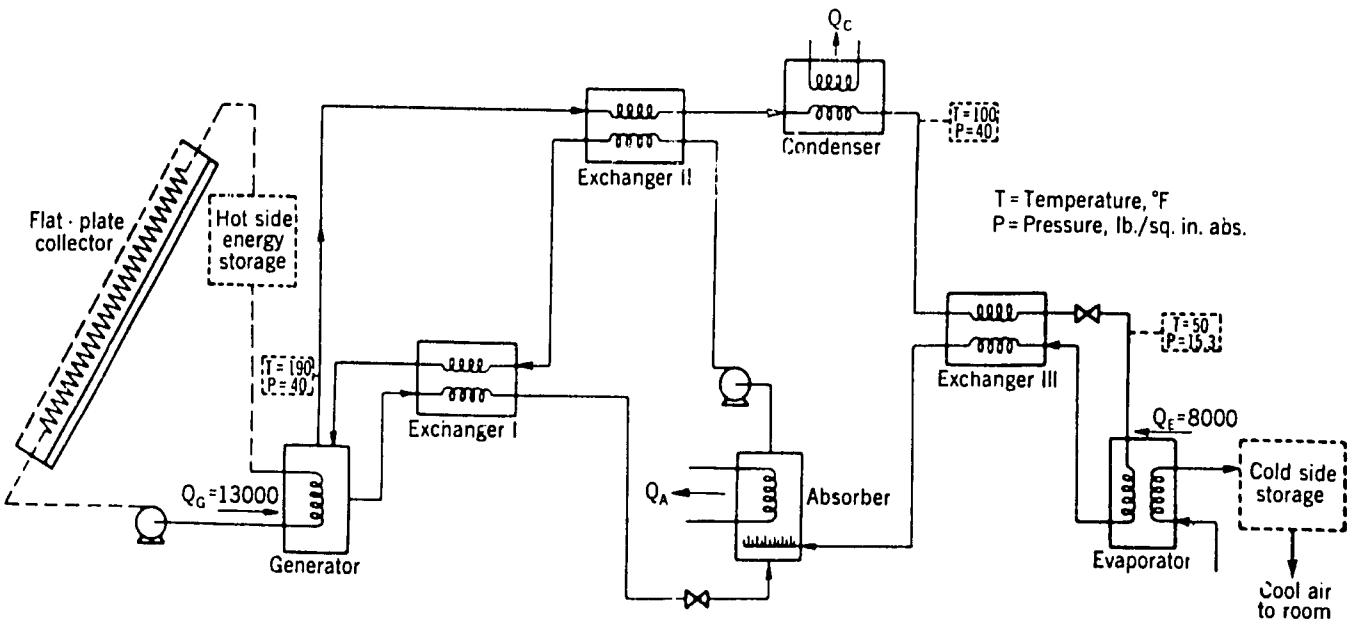

Figure 29. Indirect-heated continuous solar absorption air conditioner. (Courtesy of R. Chung, G. D. G. Löf, J. A. Duffie, University of Wisconsin, and Air Conditioning, Heating and Ventilating magazine).

The heat pump (a reversed-cycle compression refrigeration system) also holds much promise as a solar cooling and heating unit. Figure 30 shows one proposed arrangement of a heat pump for cooling and heating. Electrical energy is required to drive the compressor. Estimates indicate that when solar cooling and heating effects are combined, the cost of the installation should not exceed $2 to $7 per square foot of solar collector if the system is to compete with conventional ones. In underdeveloped areas having high cooling demands and high energy costs, the cost of solar cooling alone may be competitive.

A recently proposed scheme for solar air conditioning uses an absorbent in a manner similar to that described for the water pump of Figure 27. This proposal is presently under study and test.

Solar power. Power can be generated by using a reflector, solar boiler, steam engine or turbine, and an electric generator. Electricity can also be generated by the direct conversion of sunlight in a silicon semi-conductor cell or "solar battery." These applications are specialized, or experimental, and do not supply large quantities of energy.

The maximum plausible efficiency for a solar power plant[1] consisting of a focusing collector or a flat-plate solar exchanger producing steam at 100 psi for use in an expansion engine when generating electricity is about 15%. With a focusing collector having a 60% solar collection efficiency, about 15 square feet of solar collection surface is required for the daily generation of one kilowatt-hour of electrical power. The cost of the equipment for such a plant is low enough to warrant its use in areas such as rural India and parts of North Africa where the cost of power generated by other means is extremely high. There are no small prime movers available today that will operate at an efficiency near 15% on 100 psi steam, nor are there focusing collectors of reasonable cost which will produce this steam at 60% efficiency. A further deterrent in these areas may be the lack of capital to make the initial investment required.

Since solar energy does not continuously come to the earth and electrical storage appears to be prohibitively costly, an auxiliary energy supply would have to be provided where continuous power is essential. In some applications, such as the pumping of irrigation water,

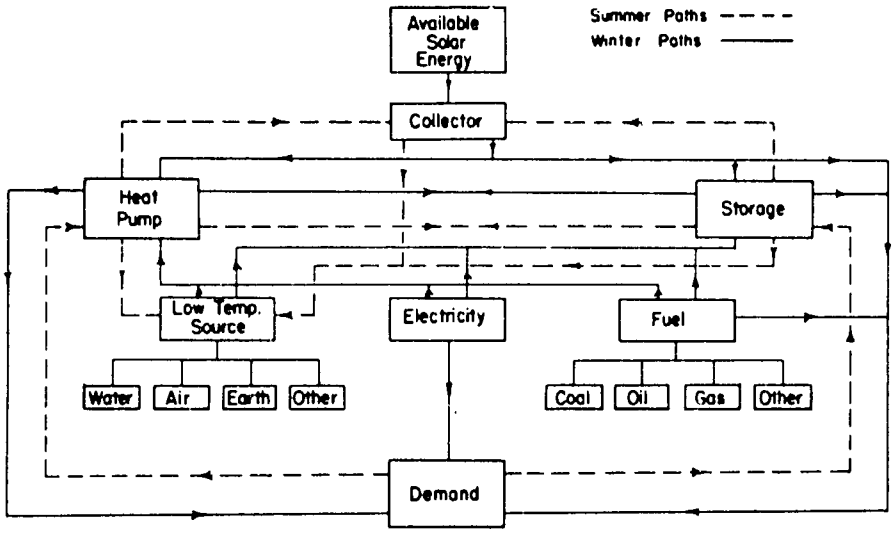

(a)

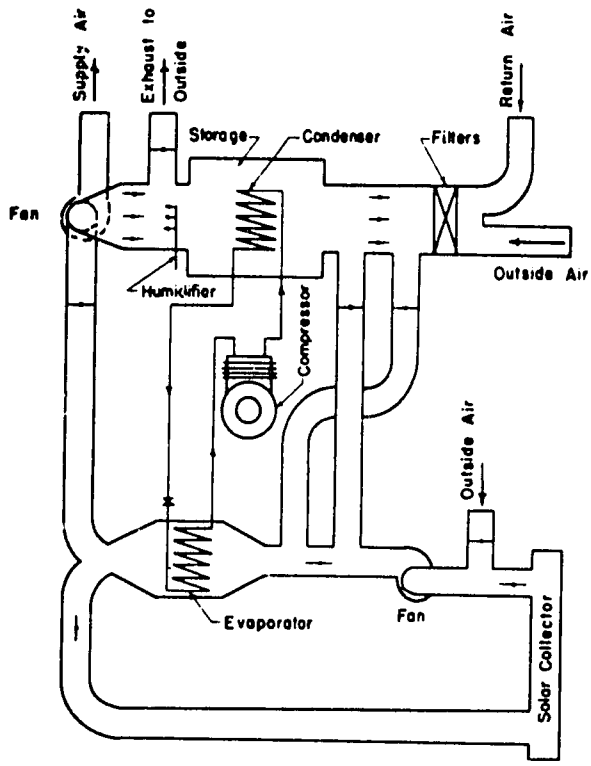

(b)

Figure 30. (a) Possible circuits for year-around air-conditioning systems using solar energy as a winter heat source. (b) Year-around solar heat-pump system. (Courtesy of R. C. Jordan, J. L. Threlkeld, and University of Arizona).

auxiliary energy is not essential. For large central power plants, economic studies show that flat-plate collectors and low-pressure turbines can generate power at a cost two to three times that of plants using conventional fuels in the U.S. For these reasons, power from solar energy is still a hope for the future.

CONCLUSIONS

Solar energy has been harnessed to do an effective job in many areas of the world today. Cooking, water heating and distillation, heating for processing metals, sewage treatment, the generation of power, and the pumping of water are some of the important tasks to which solar energy is being applied. The future holds even greater promise for solar energy utilization.

As new equipment is developed, and existing equipment improved, more applications for this abundant source of energy will be found. Solar energy offers many opportunities for improving living standards in underdeveloped areas throughout the world.

BIBLIOGRAPHY

(1) Duffie, J. A., and Löf, G. O. G., "Solar Energy," The Canadian Journal of Chemical Engineering, April, 1959

(2) Telkes, Maria, "Solar Cooking Ovens." Solar Energy, 1-11, January, 1959

(3) Duffie, J. A., "Some Ideas for Experiments on Solar Energy," University of Wisconsin (no date)

(4) Duffie, J. A., Lappala, R. P., and Löf, G. O. G., "Plastics for Focusing Collectors," The Journal of Solar Energy Science and Engineering, October, 1957

(5) Savornin, Jean, "Efficiency of Various Types of Solar Stills," Transactions of the Conference on the Use of Solar Energy, 1955

(6) Fitzmaurice, R., and Seligman, A. C., "Some Experiments on Solar Distillation of Sea Water in Cyprus During the Summers of 1954 and 1955," Transactions of the Conference on the Use of Solar Energy, 1955

(7) Farber, E. A., "Solar Water Heating," Air Conditioning, Heating and Ventilating, July, 1959

(8) Tanishita, I., "Present Status of Solar Water Heaters In Japan," Transactions of the Conference on the Use of Solar Energy, 1955

(9) Kettleborough, C. F., "Experimental Results on Thermostatically Controlled Solar Water Heaters," Solar Energy, 1955

(10) Hsu, S. T., and Leo, B. S., "A Simple Reaction Turbine as a Solar Engine," Solar Energy, July-October, 1958

(11) MacCracken, C. D., "The Solar-Powered Thermopump," Transactions of the Conference on the Use of Solar Energy, 1955

(12) Dannies, J. H., "Solar Water Pumping," Solar Energy, January, 1959

References

Jensen, J. S., "Harnessing the Sun Around the World," Newsletter of the Association for Applied Solar Energy, March, 1959

Salam, E., and Daniels, F., "Solar Distillation of Salt Water in Plastic Tubes Using a Flowing Air Stream," Solar Energy, January, 1959

ACKNOWLEDGMENTS

The company listed below is a manufacturer of equipment mentioned in this report and has supplied some of the technical information used herein, which is gratefully acknowledged:

Jet-Heet, Inc.
Englewood, New Jersey

The illustrations of equipment used in this report are reproduced with the permission of the research agencies and publishers listed below and are gratefully acknowledged:

Air Conditioning, Heating and Ventilating
The Industrial Press
New York, New York

Association for Applied Solar Energy
Arizona State University
Tempe, Arizona

The Canadian Journal of Chemical Engineering
The Chemical Institute of Canada
Ottawa, Ontario

Power
McGraw-Hill Publishing Company
New York, New York

Solar Energy Laboratory
University of Wisconsin
Madison, Wisconsin

The University of Arizona
Tuscon, Arizona

USCOMM-DC-62350