TI-59

ISN 19486; P653

629.246
L473

INTERNATIONAL COOPERATION ADMINISTRATION
OFFICE OF INDUSTRIAL RESOURCES

TECHNICAL INQUIRY SERVICE

BRAKE LININGS AND CLUTCH DISCS

FOREWORD

The Technical Inquiry Service answers inquiries from overseas on factory or commercial establishment, operation, management and engineering. This report is one of a series based on these technical inquiries.

This report is designed to provide only a general picture of the factors that must be considered in arriving at a decision to establish a factory of this type. In most cases, plans for actual installations will require expert engineering and financial advice on the spot in order to meet specific local conditions.

Mention of the name of any firm, product, or process in this report is not to be considered a recommendation or endorsement by the International Cooperation Administration, but merely a citation that is typical in its field.

The report was prepared by A. M. Lederer and Company, Incorporated, 25 Broad Street, New York 4, New York. Special technical information was provided by Bendix-Eclipse, Marshall-Eclipse Division, Troy, New York.

For further information and assistance, readers should contact their local Productivity Center, Industrial Institute, Servicio, or United States Operations Mission.

Brake Linings and Clutch Discs.

CODE NUMBER

TI-59

629.246 International Cooperation Administration.
L473 Office of Industrial Resources. NTIS
Brake Linings and Clutch Discs. Nov. 1959.
55 p.
Prepared by A.M.Lederer and Co., Inc.
IR 23334 PR.
Technical Inquiry No. 59.

1.Automobiles - Parts. 2.Industrial plants. I.Title.
II.Technical Inquiry No. 59.

NOVEMBER 1959

PN-RE 965
73096

ACKNOWLEDGMENTS

The author gratefully acknowledges the cooperation of the following companies in providing technical information for use in this brochure:

Farrel-Birmingham Company, Incorporated
Watson-Stillman Press Division
565 Blossom Road
Rochester 10, New York

Elmes Press Company
230 Park Avenue
New York 17, New York

Hydraulic Press Manufacturing Company
Teaneck, New Jersey

Gardner Machine Company
Beloit, Wisconsin

Norton Company
Worcester, Massachusetts

Behr-Manning Company
Troy, New York

Carborundum Company
Niagara Falls, New York

Ammco Tools, Incorporated
2100 Commonwealth Avenue
North Chicago, Illinois

Delta
Milwaukee, Wisconsin

Sprout-Waldron & Company, Incorporated
Muncy, Pennsylvania

New England Oven and Furnace Company, Incorporated
285 Boston Post Road
Orange, Connecticut

Bendix-Eclipse
Marshall-Eclipse Division
Troy, New York

Raybestos Division of Raybestos-Manhattan,
Incorporated
Bridgeport, Connecticut

Wagner Electric Corporation
6452 Plymouth Avenue
St. Louis 14, Missouri

E. I. du Pont de Nemours and Company
350 Fifth Avenue
New York, New York

Johns-Manville Corporation
270 Madison Avenue
New York, New York

Monsanto Chemical Company
445 Park Avenue
New York, New York

Reynolds Metal Company
19 East 47th Street
New York, New York

Asbestos Corporation of America
31 North Avenue
Garwood, New Jersey

TABLE OF CONTENTS

	Page
Introduction	1
General Assumptions	2
Product Specifications:	4
Horizontal Bolt Hole Spacing - Table I	8
Brass Semi-Tubular Rivet for Brake Lining - Figure 1	10
Dimensions of Brass Tubular Rivets for Brake Linings - Table II	11
Slotted Flat Head Capscrew for Brake Blocks - Figure 2	12
Dimensions of Flat Head Capscrews - Table III	13
4-Ton Rear Axle - Figure 3	14
4-Ton Front Axle - Figure 4	15
Schematic Brake, Drum and Axle Assembly - Figure 5	16
Schematic Brake Shoe Assembly - Figure 6	17
Typical Automotive Clutch Assembly - Figure 7	18
Borglite Drive Disc of Low Moment of Inertia - Figure 8	19
Clutch and Related Parts - Figure 9	20
Direct Materials:	21
Materials Required - Table IV	21
Volume, Weight, Price Per Pound and Cost Per Annum - Table V	22
Indirect Materials:	23
Packaging Materials - Table VI	23
Manufacturing Operations:	24
"Dry Mix" Process	24
Compaction	24
Sequence of Operations	24
Double Disc Grinder - Figure 10	27
Vertical Spindle Grinder - Figure 11	28
Bench Back Stand - Grinding Brake Lining Mounted on Shoe - Figure 12	29
Back Stand Abrasive Belt Grinder - Figure 13	30
Quality Control	31
Tools and Equipment:	32
Production	32
Other Than Production	33
Furniture and Fixtures	33
Personnel Requirements:	34
Direct Labor	34
Indirect Labor	35

		Page
Building		36
Plant Site		37
Depreciation		37
General Plant Layout - Figure 14		38
Manufacturing Overhead		39
Cost of Production		39
Working Capital		40
Total Capital Requirements		40
Profit Calculation		41
Safety		42
Training		42
Cost Controls		43
Budget		43
Summary		44
Bibliography		46
Patents and Formulae -	Appendix I	47
Quality Control Scoring Sheet -	Appendix II	49
Cash Budget Form -	Appendix III	50
Stock Record and Requirements Forms -	Appendix IV	51
Receiving Record Form -	Appendix V	52
Purchase Requisition Form -	Appendix VI	53
"Withdrawal From Stores" Form -	Appendix VII	54
Purchase Order Form -	Appendix VIII	55

INTERNATIONAL COOPERATION ADMINISTRATION
OFFICE OF INDUSTRIAL RESOURCES

TECHNICAL INQUIRY SERVICE

IR-23334 PR

BRAKE LININGS AND CLUTCH DISCS

INTRODUCTION

The term "brake lining" is given to treated and compressed fabrics used for lining the brake bands of motor vehicles and many other types of machinery. Brake linings may be impregnated woven fabrics or they may be made from impressed fibres bonded together with a heat-resistant binder.

There are innumerable variations in the types of ingredients used in the manufacture of brake linings and clutch discs. Most of the processes followed are either covered by patents or are secret. Shown in the "Appendix" are several patented formulae, which indicate the types of materials used and their disc ratios.

A manufacturer contemplating the production of brake linings or clutch discs should either contact existing manufacturers of these products for license arrangements or develop his own compositions, so long as they do not infringe upon present valid patents. The industry is engaged in extensive research to improve the quality of its products and manufacturing methods and a large percentage of the sales dollar is spent on research.

The early forms of brake linings were:

(a) Woven asphalt-base linings. In general, these linings consisted of an impregnated tape woven from long fibred asbestos and cotton yarn reinforced with brass or zinc wire.

(b) Folded and compressed brake linings. A plain square-woven, single-ply asbestos-cotton-brass-wire fabric, untreated or treated, is generally

used for this type of lining, and the friction material most commonly in use is some form of rubber compound or Buna S.

Today, brake linings and clutch discs are generally made by one or both of the following processes:

(a) "Wet Mix"

(b) "Dry Mix"

The basic ingredients are asbestos, comprising as much as 50 percent of the volume, and resin, comprising as much as 35 percent. Friction materials and fillers make up the balance.

The "Wet Mix" process utilizes a liquid resin.

The "Dry Mix" process utilizes a powdered resin.

Both processes produce high quality products which have been accepted by the automotive industry for years. Both "Wet Mix" and "Dry Mix" linings are produced for passenger cars and light trucks, either for all brake shoe application or in combination.

Heavy truck lining segments and blocks are most frequently made by the "Dry Mix" process.

There are limitations in both processes, however, by virtue of the raw materials used and the various manufacturing operations required.

It is recommended that the "Dry Mix" process be employed, because it permits a wider range of product and size and requires a minimum investment in equipment.

GENERAL ASSUMPTIONS

In order to make an estimate, the following assumptions are made:

1. The costs of building, equipment, and material are based on United States current prices.

2. Labor costs are based on the prevailing rates paid in the industry.

3. All other costs are based on current United States prices.

4. Adequate electric power, water, and transportation facilities are available at plant site.

5. The plant will operate 40 hours per week, 52 weeks per year.

6. Distribution will be made through wholesalers and some of the products will be sold to manufacturers of vehicles and machinery.

7. Work on each machine will be so scheduled as to minimize idle time and set-up time.

8. The following items can not be estimated realistically:

   a) In-freight and out-freight

   b) Land value

   c) Taxes, insurance, and interest

PRODUCT SPECIFICATIONS

Selection of Linings:

An ideal lining would retain the same gripping power under all conditions, sufficient to give a soft or light uniform pedal pressure on the braking system to which it is applied. It should be noiseless, non-scoring, heat-resistant, and non-aging.

The operator wants a lining that under all conditions will permit a smooth controllable stop.

Gripping Power:

"Fade-out" is a term applied to loss of gripping power as the stop progresses. This is an undesirable feature and one that a good quality brake lining will minimize.

"Build-up" is the reverse of "Fade-out". In this actio the gripping power of the lining increases during the stop. This characteristic in brake lining is less objectionable than "Fade-out".

"Grabbing" action is one of the effects of absorption. Porous linings, or linings that produce a heavy dust, may show this effect.

Noise:

Brake squeals are due to mechanical conditions in the brake which can be corrected by competent and fully equipped brake shops.

Chatter in a brake may be caused by the brake lining or by mechanical conditions, which can be corrected. A lining that has a tendency to absorb moisture will cause chatter.

Scoring:

A lining that scores or grooves a brake drum will add to its cost of operation.

Heat Resistance:

The principal function of brakes is to transform the inertia of a moving vehicle into heat. The heat that is produced between the lining face and the brake drum travels into both. The metal in the brake drum draws away the heat from the friction surface more rapidly than does the lining, the latter serving as an insulator and the drum acting as a sponge - soaking up

heat instead of water. An ideal lining would be one that is not affected by the high temperatures that are encountered under the more severe operating conditions.

Aging Quality:

A brake lining should not change materially with age.

Packaging:

Linings should be supplied in convenient containers, packed with as little waste space as possible, which bear plainly visible marks of identification.

Brake Lining Data Book:

The Friction Material Standards Institute, Incorporated, 370 Lexington Avenue, New York 17, New York, publishes a brake lining and clutch facing data book. This book furnishes the principal dimensions and design features, and lists makers and models of cars and trucks.

Recommended Practice for Brake Linings:
(By the Society of Automotive Engineers "SAE")

The SAE standards cover riveted, bolted, and bonded brake linings. Bonded linings should not be drilled for rivets or bolts.

PART I - This part covers sizes and drilling patterns for passenger car and light commercial vehicle types of riveted brake linings for brake sizes 8 to 12 inches inclusive.

Brake Measurements:

The outside diameter of the brake - that is, the outside diameter of the lining and shoe assembly mounted on the backing plate - is considered the measure of brake size and is designated in even inches on the inch as basic. A single or basic thickness of lining is used in connection with this basic brake diameter.

Brake Lining Measurements:

a) Basic thickness is 3/16 inches; deviations are to be in increments of 1/16 inch, with consequent changes in outside brake diameters.

b) Widths of linings range from 1-1/2 inches and up in increments of 1/4 inch.

c) Basic lengths of linings are 93 degrees or 120 degrees, or both, arcwise; deviations to be in increments of 13 degrees, 30 minutes.

d) Rivet hole spacing is 6, 27, 27, 27, and 6 degrees arcwise for 93-degree lengths; and 6, 27, 27, 27, 27, and 6 degrees for 120-degree lengths. Intermediate rivet holes are to be spaced arcwise halfway between or at 13 degrees, 30 minutes. Centers of rivet holes spaced across the lining are to be 3/8 inch from the edge of the lining for widths up to 2-1/2 inches inclusive, and 1/2 inch from the edge of the lining for widths greater than 2-1/2 inches.

Tolerances:

Brake lining manufacturers' tolerances are as follows:

Lengths	+1/8, -0	inches
Widths	+0, -1/32	"
Thickness, production ...nominal	+0.030, +0.010	"
Thickness, service .....nominal	+0.000, -0.020	"

It is recommended that drill diameters for rivet holes be not more than 1/64 inch greater than rivet shank diameters and that countersink diameters be not more than 1/32 inch greater than rivet head diameters.

PART II - This part covers sizes and drilling patterns of riveted and bolted brake linings, sizes 13 to 17 inches inclusive, for trucks and buses.

There are two standard linings for truck and bus brakes in this size limit, one for brakes using a lining less than 1/2 inch in thickness, and the other for brakes using a lining 1/2 and over.

Definitions:

Pieces of lining less than 1/2 inch in thickness are designated as segments, and those 1/2 inch and over as blocks.

Brake Segment Measurements:

a) Basic thickness of segments is 1/4 inch for 13- to 15-inch brakes inclusive, 3/8 inch for 16-inch brakes and larger. Deviations shall be in increments of 1/16 inch with consequent changes in outside brake diameters.

b) Widths of segments range from 1-3/4 inch and up for 13- and 14-inch brakes; 2 inches and up for 15-inch brakes; and 2-1/4 inches and up for 16-inch brakes and larger, in increments of 1/4 inch.

c) Basic lengths of segments are 98 degrees or 120 degrees or both arcwise; deviations to be in increments of 11 degrees.

d) Rivet hole spacing is 5,22,22,22,22,5 degrees arcwise for 98-degree lengths, and 5,22,22,22,22,22 degrees for 120-degree lengths; intermediate rivet holes arcwise are to be spaced halfway between or at 11 degrees. Center of rivet holes spaced across the segment are 3/8 inch from edge of segment for widths up to 2 inches inclusive, and 1/2 inch from edge of segment for widths greater than 2 inches. Where additional rivets nearer the centerline of the segment are desired, centers of rivet holes shall be spaced 2 inches apart horizontally or 1 inch from each side of centerline, and arcwise halfway between standard rivet holes or at 11 degrees. It is considered to be within these recommendations to omit any rivet holes.

Tolerances:

Brake lining manufacturers' tolerances for segments are as follows:

Lengths	+1/8,-0	inches
Widths	+0,-1/32	"
Thickness, production ...nominal	+0.030, +0.010	"
Thickness, service.....nominal	+0.000, -0.020	"

It is recommended that drill diameters for rivet holes be not more than 1/64 inch greater than rivet shank diameters and that countersink diameters be not more than 1/32 inch greater than rivet head diameters.

Brake Block Measurements:

The basic outside brake diameters shall start with 13 inches for brake blocks. Optional deviations shall be in increments of 1/2 inch.

a) Basic thickness of blocks is 3/4 inch; deviations are to be in increments of 1/8 inch with consequent changes in shoe radii.

Note: The block recommendations differ from the segment recommendations in that the shoe radii rather than the drum diameter are altered to compensate for changes in thickness. This is

done because in the larger brake sizes the diameter of the drum is limited by the size of the wheel and in many cases can not feasibly be made larger.

b) Widths of blocks are 3 inches and up in increments of 1/2 inch.

c) Basic length of blocks is 58 degrees.

d) Hole spacing for bolts is 7,44,7 degrees arc-wise; intermediate bolt holes shall be spaced halfway between or at 22 degrees. Center of bolt holes spaced across the block shall be one-half the width of the block apart in the case of blocks of full inch widths, and one-half the width of the next full inch block apart in the case of blocks of intermediate 1/2-inch widths, as shown in Table I below. Any deviation of this spacing shall be in increments of 1/2 inch.

TABLE I

Horizontal Bolt Hole Spacing

Width of Block	Horizontal Bolt Hole Spacing	Width of Block	Horizontal Bolt Hole Spacing
3 inches	1½ inches	6 inches	3 inches
3½	2	6½	3½
4	2	7	3½
4½	2½	7½	4
5	2½	8	4
5½	3		

e) Hole spacing for rivets is 7,22,22,7 degrees, with intermediate holes spaced halfway or at 11 degrees. Center of rivet holes spaced across the block shall be 3/4 inch from edge of block. In the case of 6-inch blocks or wider, where additional rivets nearer the centerline of the blocks are desired, centers of rivet holes shall be spaced 2-3/4 inches apart horizontally or 1-3/8 inches from each side of centerline of block. It is considered to be within these recommendations to omit any rivet holes.

Tolerances:

Brake lining manufacturers' tolerances for blocks are as follows:

Lengths	+/-1/8 inches
Widths	+/-1/32 "
Thickness, production ...nominal	+0.030, +0.010 inches
Thickness, service .....nominal	-0.015, -0.030 "

PART III - This part covers sizes and drilling patterns for riveted and bolted linings for brake sizes 18 inches and larger for earth-moving, off-highway, and other heavy-duty, rubber-tired vehicles. Unless otherwise stated, recommendations are the same as for Part II.

Brake Block Measurements:

The basic outside brake diameters shall be in 2-inch increments, starting with 18 inches.

a) Basic thickness of blocks is 3/4 inch; deviations are to be in increments of 1/8 inch with consequent changes in shoe radii.

b) Width of blocks is 6 inches and up, in increments of 1 inch.

Methods of Attaching Brake Shoe Linings:

There are at least eight different methods of attaching friction material to brake shoes. Rivets are most commonly used on the friction blocks, but an increasing number of linings are being bonded to the brake shoes. Bolts, nuts, and lockwashers are generally employed for attaching the thicker brake linings. Lock-on types of fastening are rarely used in present day practice for automotive linings. Semi-tubular brass rivets are recommended in place of tubular, split, or solid rivets. (See Figure 1, Page 10).

Bolts for Brake Shoes:

The standard bolt for brake shoe blocks shall be a brass slotted flat head capscrew 3/8 inch in body diameter, with a 3/4 inch diameter head having an inclusive angle of countersink of 82 degrees and conforming to SAE standards for slotted and recessed head screws.

It is recommended that drill and countersink diameters for bolt holes be 35/64 inch and 49/64 inch respectively, with the bottom of the countersink within 3/32 ± 0.010 of the shoe side of the block. (See Figure 2, Page 12, and Table III, Page 13.)

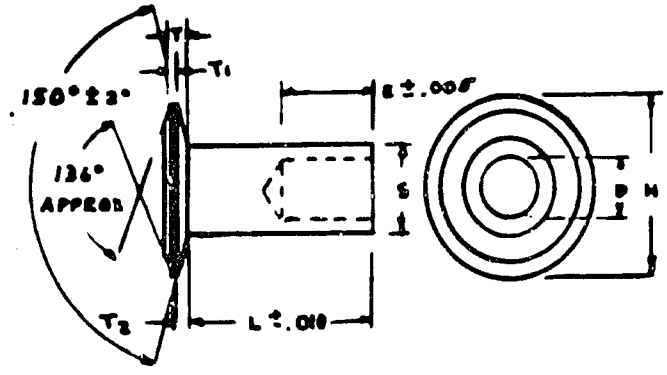

Figure 1

Brass Semi-Tubular Rivet for Brake Lining

(Table II, Page 11, gives the dimensions for brass semi-tubular rivets used for brake linings.)

TABLE II

Dimensions of Brass Semi-Tubular Rivets for Brake Linings

(In Inches)

Rivet Size Number	Shank Diameter (S)			Head Diameter (H)			Head Thickness			Drill Size	Drill Depth
	Nominal	Maximum	Minimum	Nominal	Maximum	Minimum	(T)	(T1)	(T2)	(D)	(E)
4	9/64	0.148	0.140	19/64	0.301	0.291	0.034 ± 0.003	0.005	0.020	No.39(0.0995)	1/8
5	9/64	0.148	0.140	23/69	0.364	0.354	0.045 ± 0.003	0.005	0.028	No.39(0.0995	5/32
7	3/16	0.190	0.180	23/64	0.364	0.354	0.046 ± 0.003	0.009	0.023	No.29(0.136)	7/32
8	3/16	0.190	0.180	15/32	0.458	0.458	0.065 ± 0.004	0.012	0.037	No.29(0.136)	7/32
10	1/4	0.250	0.240	15/32	0.458	0.458	0.058 ± 0.004	0.012	0.030	No.16(0.177)	9/32

Length (L): Specified in increments of 1/2 inch.

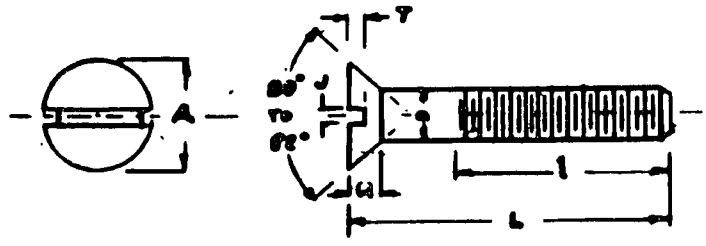

Figure 2

Slotted Flat Head Capscrew for Brake Blocks

(Table III, Page 13, gives the dimensions for Flat Head Capscrews for Brake Blocks.)

TABLE III

Dimensions of Flat Head Capscrews

(In Inches)

	D		A		H	J		T	
	Body Diameter		Head Diameter		Height of Head	Width of Slot		Depth of Slot	
Nominal Size	Max-imum	Min-imum	Max-imum	Min-imum	Average	Max-imum	Min-imum	Max-imum	Min-imum
1/4	0.250	0.245	0.500	0.477	0.140	0.075	0.064	0.069	0.046
5/16	0.3125	0.307	0.625	0.598	0.176	0.084	0.072	0.086	0.057
3/8	0.375	0.369	0.750	0.720	0.210	0.094	0.081	0.103	0.069
7/16	0.4375	0.431	0.8125	0.780	0.210	0.094	0.081	0.103	0.069
1/2	0.500	0.493	0.875	0.841	0.210	0.106	0.091	0.103	0.069
9/16	0.5625	0.555	1.000	0.962	0.245	0.118	0.102	0.120	0.080
5/8	0.625	0.617	1.125	1.083	0.281	0.133	0.166	0.137	0.092
3/4	0.750	0.742	0.742	1.375	1.326	0.149	0.131	0.171	0.115
7/8	0.875	0.866	1.625	1.568	0.423	0.167	0.147	0.206	0.139
1	1.000	0.990	1.875	1.811	0.494	0.188	0.166	0.240	0.162

4 TON REAR AXLE

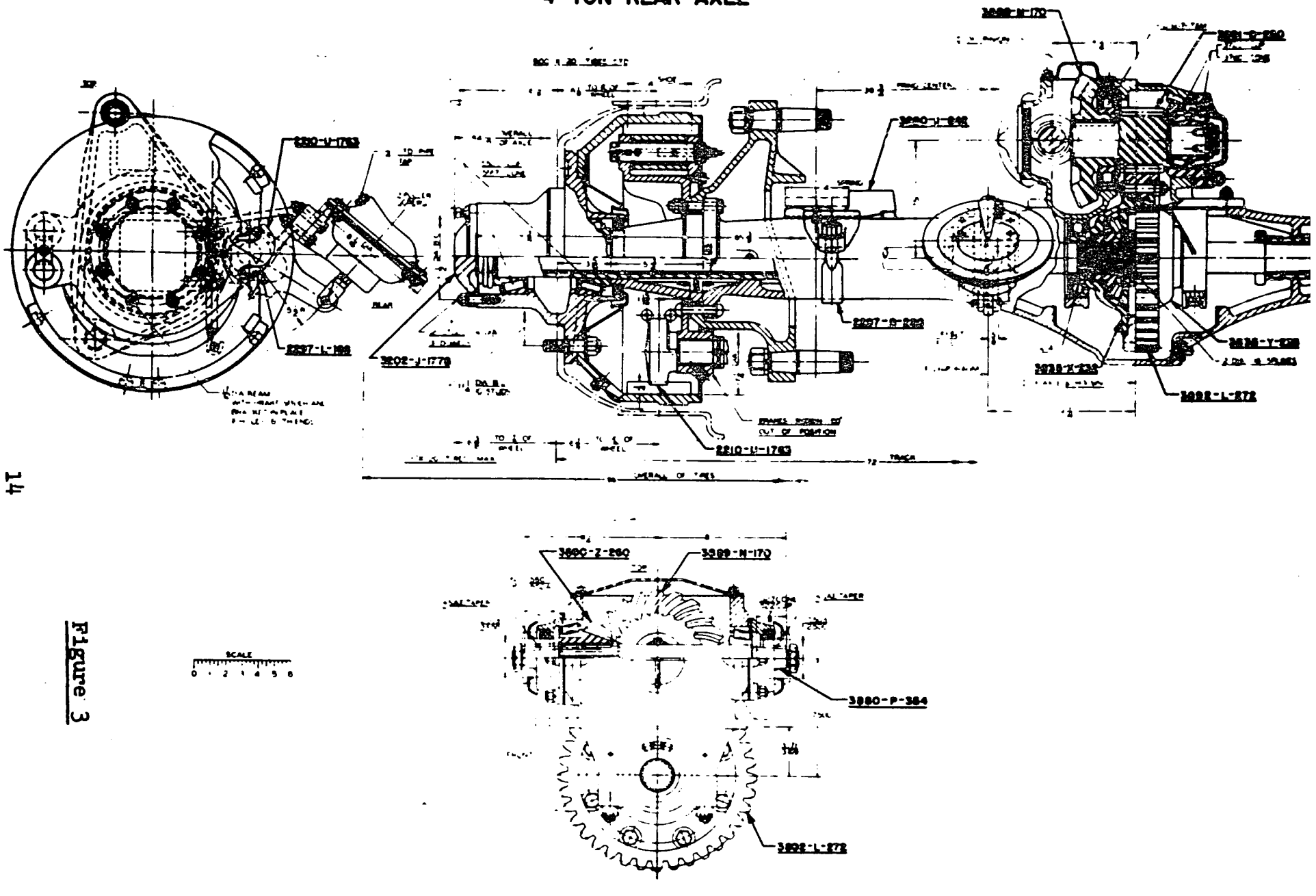

Figure 3

FOUR TON FRONT AXLE

Figure 4

This drawing illustrates a heavy duty automotive vehicle rear axle and the relationship of the brakes - and the extreme importance of good braking material.

Eng'g Let.	REVISION	DATE & NUMBER

Figure 5

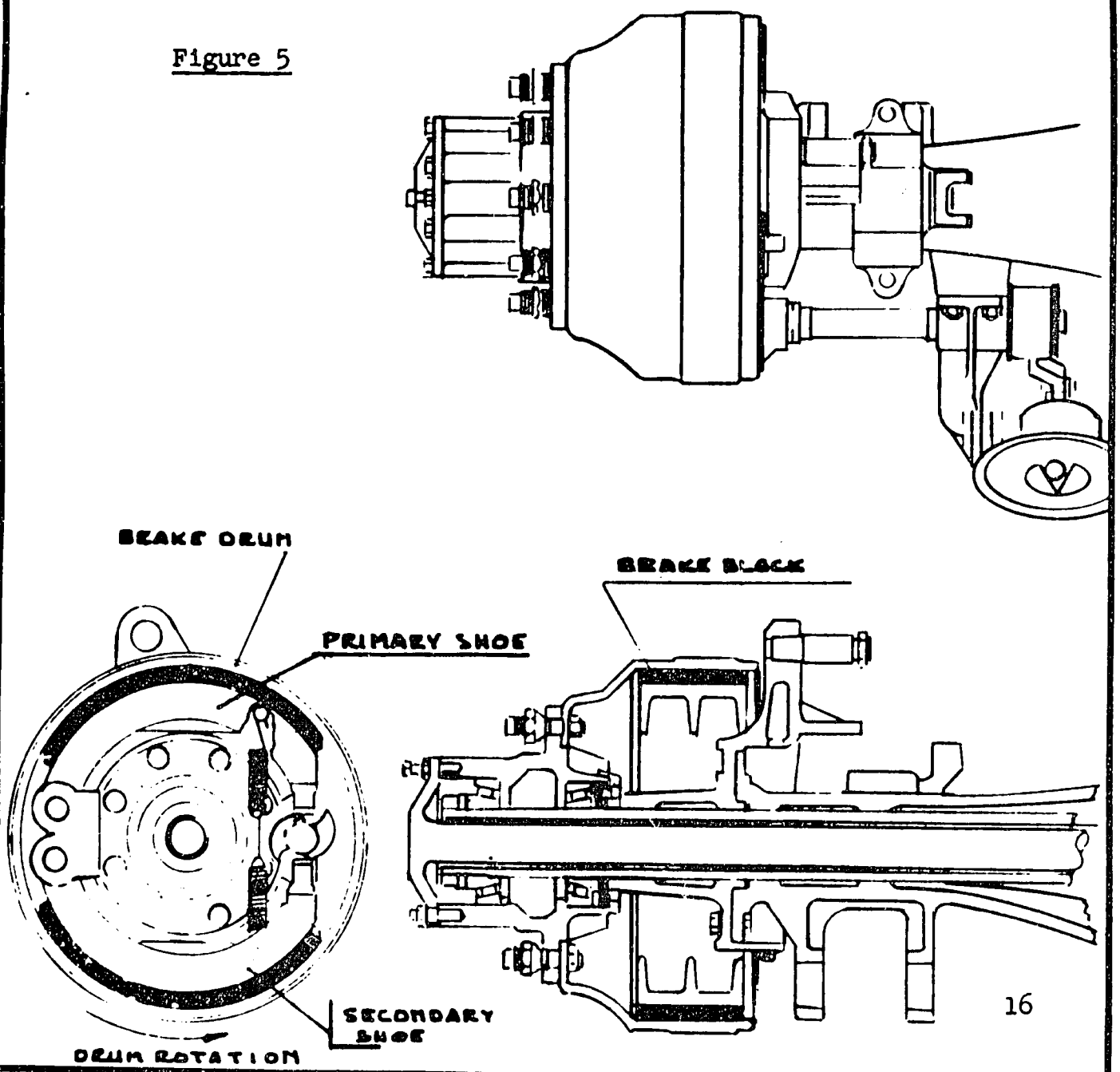

ALLOWANCE + OR − .010 ON ALL FRACTIONAL DIMENSIONS.
REMOVE ALL BURRS.
BREAK ALL SHARP MACHINED EDGES.
MACHINE ALL CORNERS WITH 1/32 RADIUS UNLESS OTHERWISE SPECIFIED.

SCALE

MATERIAL

F-1=1/32 FIN. F-3=3/32 FIN. F-5=5/32 FIN.
F-2=1/16 FIN. F-4=1/8 FIN. F-6=3/16 FIN.
F=FINISH

PART NO.

NAME
SCHEMATIC BRAKE, DRUM & AXLE ASSEMBLY

DATE

DRAWN BY | CHECKED BY

TRACED BY | APP'V'D BY

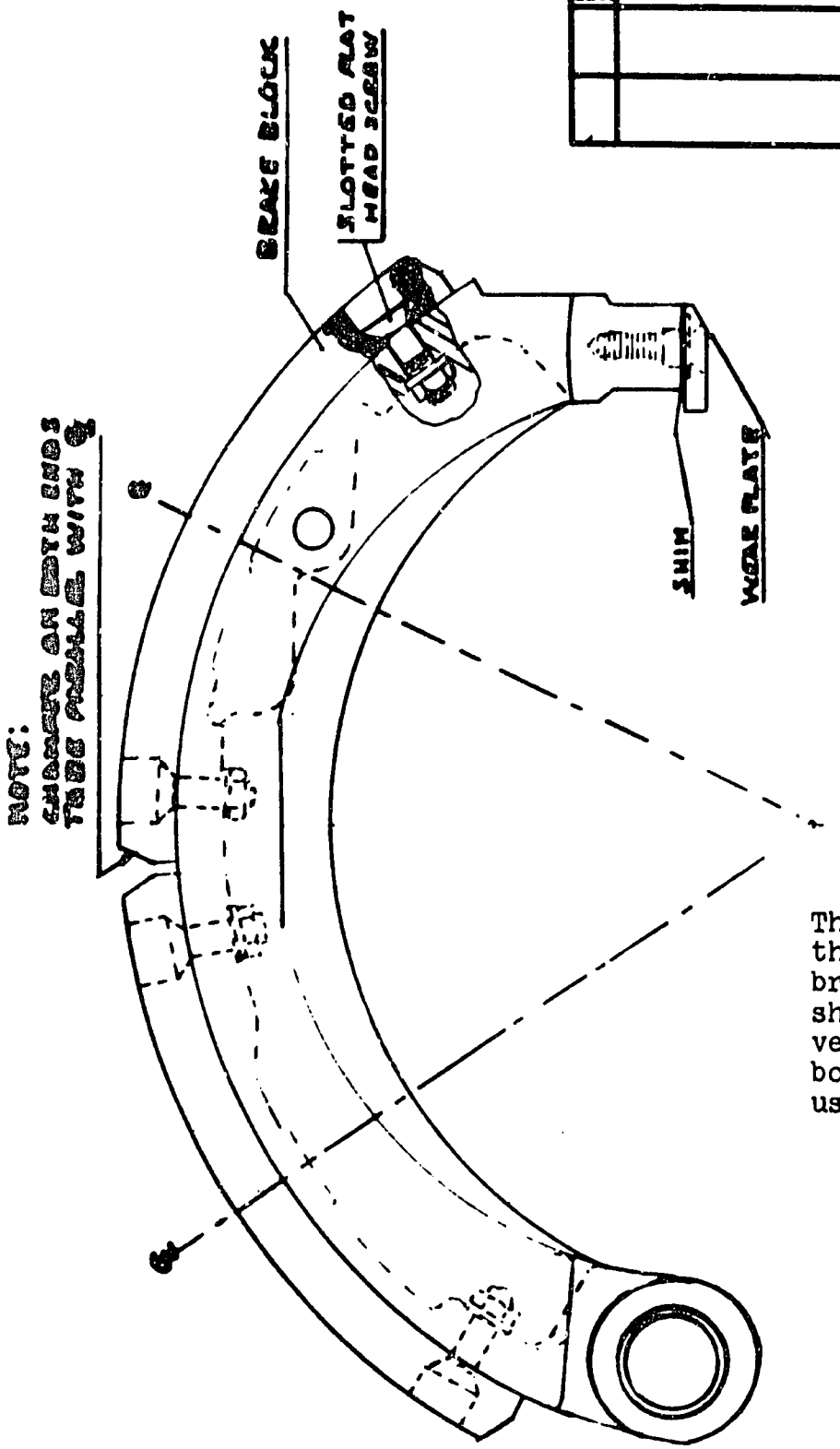

This drawing illustrates the method of attaching brake linings to brake shoes. In the large vehicle applications, bolts are more generally used.

Figure 6

ALLOWANCE + OR − .010 ON ALL FRACTIONAL DIMENSIONS. REMOVE ALL BURRS. BREAK ALL SHARP MACHINED EDGES. MACHINE ALL CORNERS WITH 1/32 RADIUS UNLESS OTHERWISE SPECIFIED.	PART NO.	
	NAME BRAKE SHOE ASSEMBLY	
SCALE		
MATERIAL	DATE	
F-1=1/32 FIN. F-2=1/16 FIN. F-3=3/32 FIN. F-4=1/8 FIN. F-5=5/32 FIN. F-6=3/16 FIN. F=FINISH	DRAWN BY	CHECKED BY
	TRACED BY	APP'V'D BY

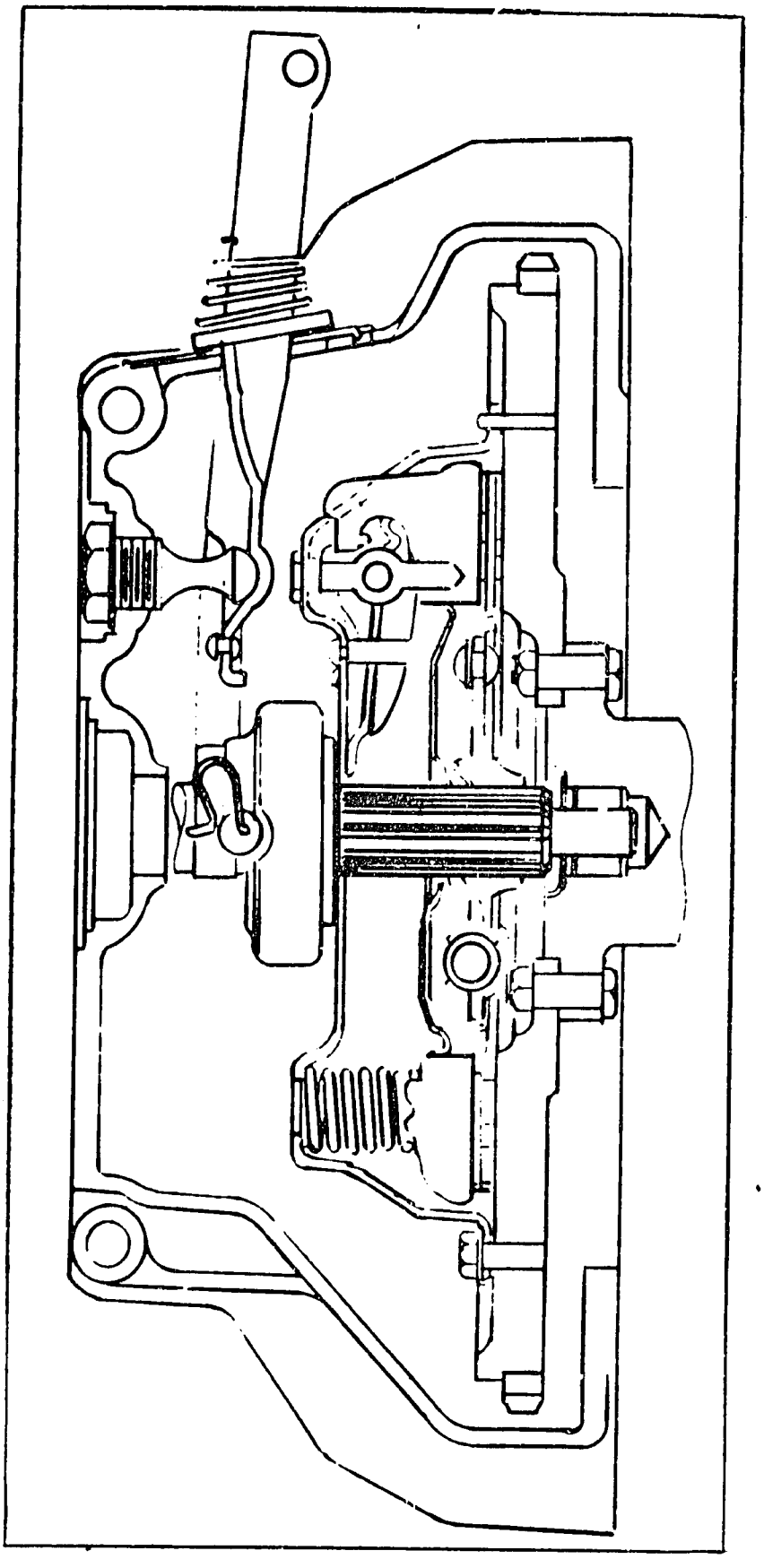

Typical Automotive Clutch Assembly

Figure 7

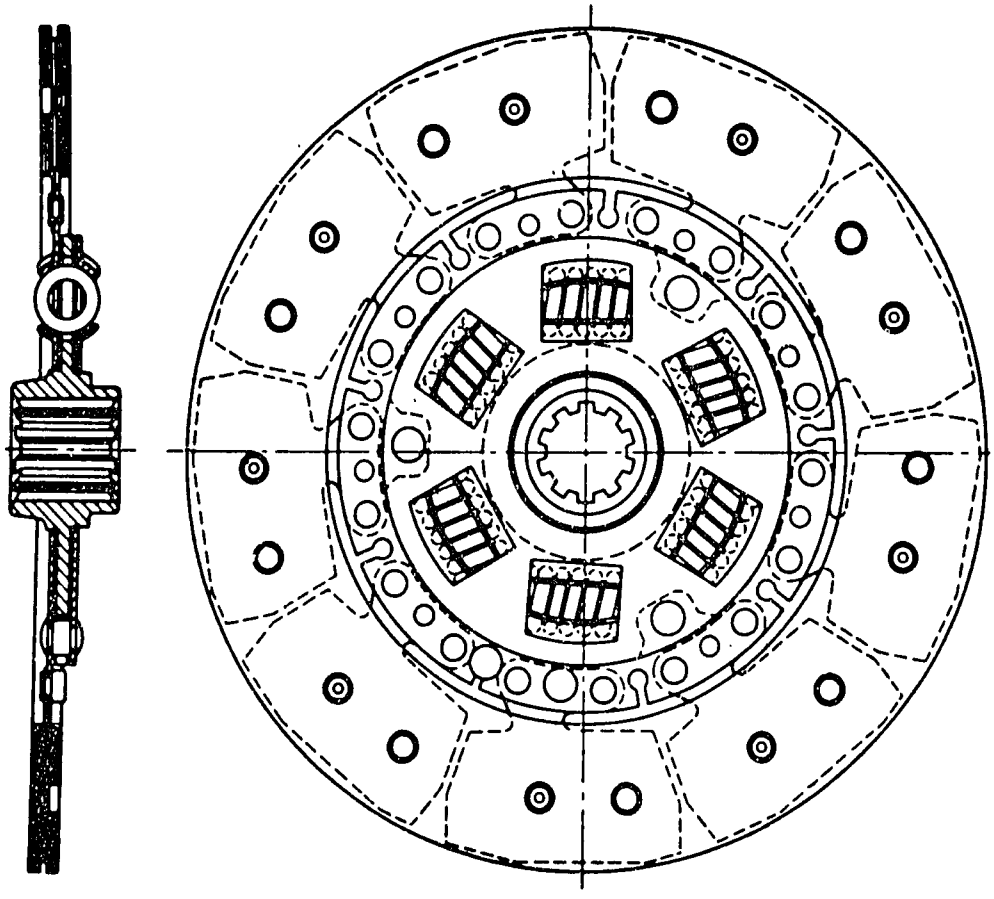

—Borglite Driven Disc of Low Moment of Inertia. (Each Cushion Spring Has a Double Radial Crimp in It.)

Figure 8

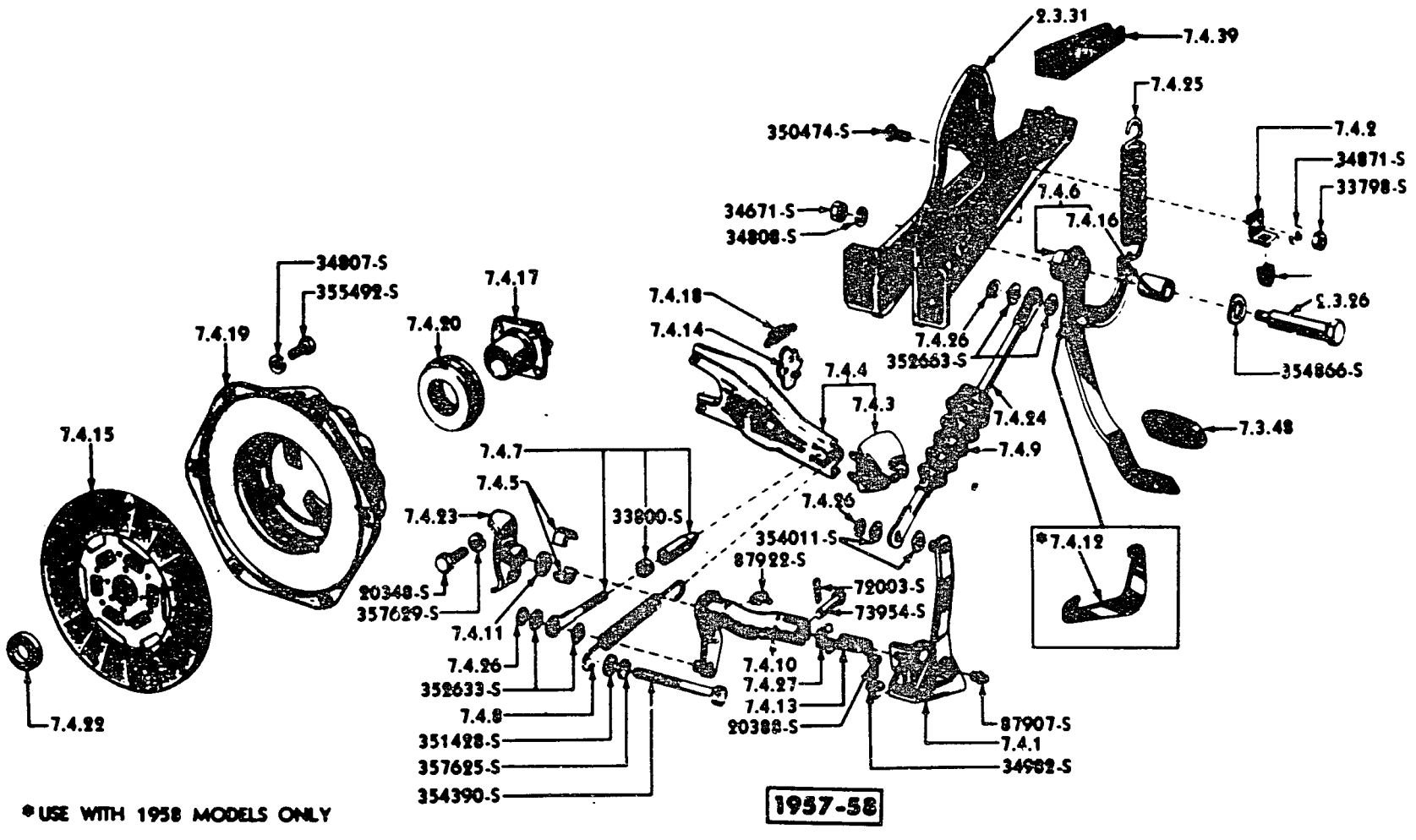

*USE WITH 1958 MODELS ONLY

CLUTCH AND RELATED PARTS

Group numbers only shown on illustration. Order by Part Numbers shown in list of parts.

Figure 9

DIRECT MATERIALS

(The Direct Materials required to produce this schedule are shown in Table V)

TABLE IV

Product Mix		(A)	(B)	(C)	(D)	Friction Material Volume Required (E)	(F)	(G)	(H)
Group Number	Description	Estimated Annual Production Vehicles	Pieces Per Vehicle	Total Pieces Required Per Year	Types of Vehicles In Each Group	Per Group Cubic Inches	Average Cubic Inches Per Vehicle $\frac{E}{D}$	Net Cubic Inches Required Per Year F x A	Net Cubic Feet $\frac{G}{\text{Cu.In./Cu.Ft.}} = \frac{G}{1728}$
1	Passenger Vehicles	60,000	8	480,000	6	277.92	46.32	2,779,200	1,608.33
2	Light Trucks	50,000	8	400,000	4	504.71	126.177	6,308,850	3,650.95
3	Heavy Duty Trucks	10,000	8	80,000	2	672.87	336.445	3,364,450	1,947.01
4	Clutch Facings	25,000	2 or 24	50,000 or 600,000	11	243.52	22.14	553,500	320.31

Group Number	Types of Vehicles
1	Chevrolet, Ford, Plymouth, Mercury, Buick, Cadillac
2	Chevrolet 1½-ton and 2-ton; General Motors, International Harvester
3	Mack, White
4	1 + 2 + 3 - Cadillac

Net cubic feet required	7,526.60
Add 15 percent allowance for scrap	1,128.99
Gross cubic feet per year	8,655.59

DIRECT MATERIALS (Continued)

TABLE V

(Volume, Weight, Price Per Pound and Cost Per Annum)

Ingredients	(J) Quantity By Volume (Percent)	(K) Weight Per Cubic Foot (Pounds)	(L) Cubic Feet Required Per Year H x J	(M) Quantity Required Per Year (Pounds) K x L	(N) Estimated Price Per Pound (Dollars)	(P) Estimated Cost of Direct Material Per Year (Dollars) M x N
Heat Resistant Material: Short Fibre Asbestos	50	175	8,655.59 x .50 = 4,327.80	757,365,000	.40	302,946.00
Binder Material: Phenol Formaldehyde	35	79	8,655.59 x .35 = 3,029.456	239,327.024	.40	95,730.80
Modifiers: Abrasives Limestone	15	167	8,655.59 x .15 = 1,298.338	216,811.446	.12	26,017.37
				1,213,503.470		

Estimated Cost Direct Material $424,694.17

INDIRECT MATERIALS

(Packaging Materials)

TABLE VI

Quantity	Description	Price Per Each (Dollars)	Amount (Dollars)
240,000	Cartons for Linings	.05	$12,000
25,000	Cartons for Clutch Facings	.10	2,500
2,000	Cardboard Boxes	1.00	2,000
	Miscellaneous Lumber and Supplies		3,000
	Estimated Total		$19,500

MANUFACTURING OPERATIONS

"Dry Mix" Process:

All ingredients used are in powder form and dry. After careful weighing, the ingredients are mixed in what is known as the "intimate blending system". This system requires five machines, three ribbon blade mixers, and two attrition mills, and more thoroughly intermixes the ingredients than any other known method. The mix is now in a fluffy state and has to be compacted into a briquette. This is done in a mold measuring up to 34 inches by 34 inches on a hydraulically operated press - exerting pressures 1500-2500 pounds per square inch. The mix is weighed and then poured evenly into the mold before compacting.

Compaction:

Two methods are used for "Dry Mix" compacting: one for brake linings up to 3/8 inch thick and another for brake block linings over 3/8 inch thick.

a) Brake linings up to 3/8 inch thick are compressed into a flat sheet under pressures of 1500-2500 pounds per square inch.

b) Brake linings in blocks over 3/8 inch thick are compressed in a mold, shaped to the desired contour, under pressures of 1500-2500 pounds per square inch.

Sequence of Operations:

Number of operations	20
Number of transportations	10
Number of inspections	2
Number of storages	10
	42

	Operations	Action
1.	Receive and inspect raw material	Check material against specifications and quantity
2.	Store	Place in raw storage
3.	Withdraw from stores	Prepare release from stores and withdraw
4.	Weigh raw materials	Weigh ingredients for mix

5.	Mix	Mix ingredients in Sprout Waldron Mixer
6.	Move	Transport to briquetting
7.	Weigh material before briquetting	Weigh materials in plasti pails
8.	Place material in die-level	Place ingredients in mold and level
9.	Briquette	Briquette into flat sheets
10.	Temporary storage	In temporary bank
11.	Move	To curing press
12.	Cure in press (80 percent)	Cure in multiple layers between heated platen at 300 degrees Fahrenheit
13.	Cool	Cool trays by dipping in soup solution; cool flat sheets in water
14.	Temporary storage	
15.	Move	To slitting station
16.	Slit slab into sections	Cut longitudinally into strips the prescribed width
17.	Temporary storage	
18.	Move	To face grinders
19.	Strips face-ground on double disc grinder (20-horsepower motor at 1800 revolutions per minute)	Face-grind strips on double disc grinders with ante feed
20.	Temporary storage	
21.	Move	To stone cutter
22.	Cut to length	Cut to length on stone cutter cut-off with abrasive wheel (2-piece)
23.	Temporary storage	

24.	Move	To bending station
25.	Bend	Bend to shape
26.	Temporary storage	
27.	Move	To curing oven
28.	Cure in oven	Cure in single lap tunnel conveyor oven at 300-375 degrees Fahrenheit for 2-3 hours
29.	Temporary storage	
30.	Move	To grinders
31.	Internal grind 21-87	Internal grind on special grinder
32.	External grind 21-87	External grind on special grinder
33.	Temporary storage	
34.	Move	To champer
35.	Champer	Champer on disc grinder
36.	Drill and counter-sink holes	Drill on single spindle sensitive drill - special combination drill and countersink
37.	Inspect	Check for defects and dimensions
38.	Stencil	Stencil trademark, etcetera
39.	Mark	Paint identifying strip on lining
40.	Pack	In containers
41.	Send to finished stores	
42.	Ship	On order

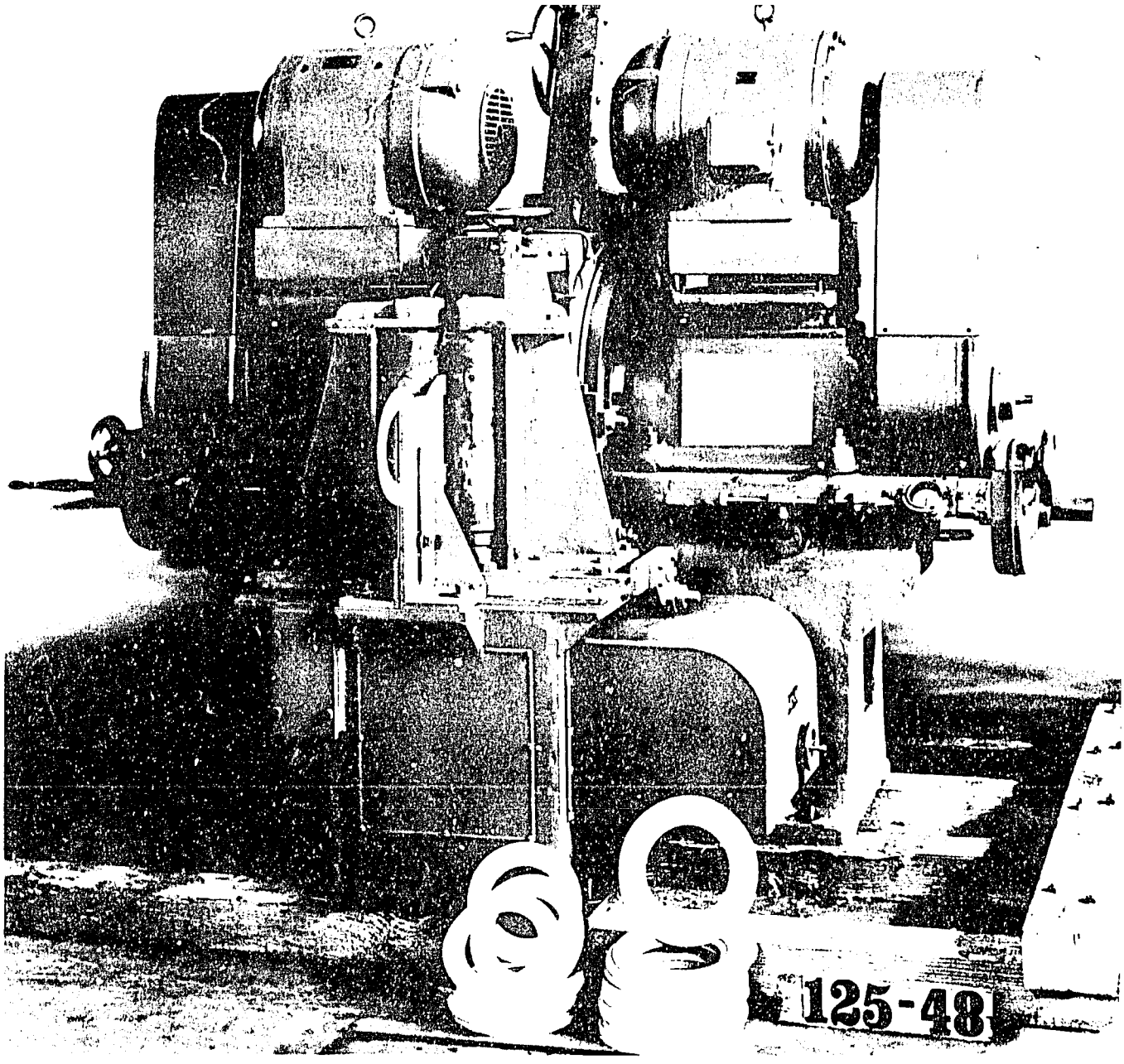

Double Disc Grinder - Set Up To Grind Clutch Discs

Figure 10

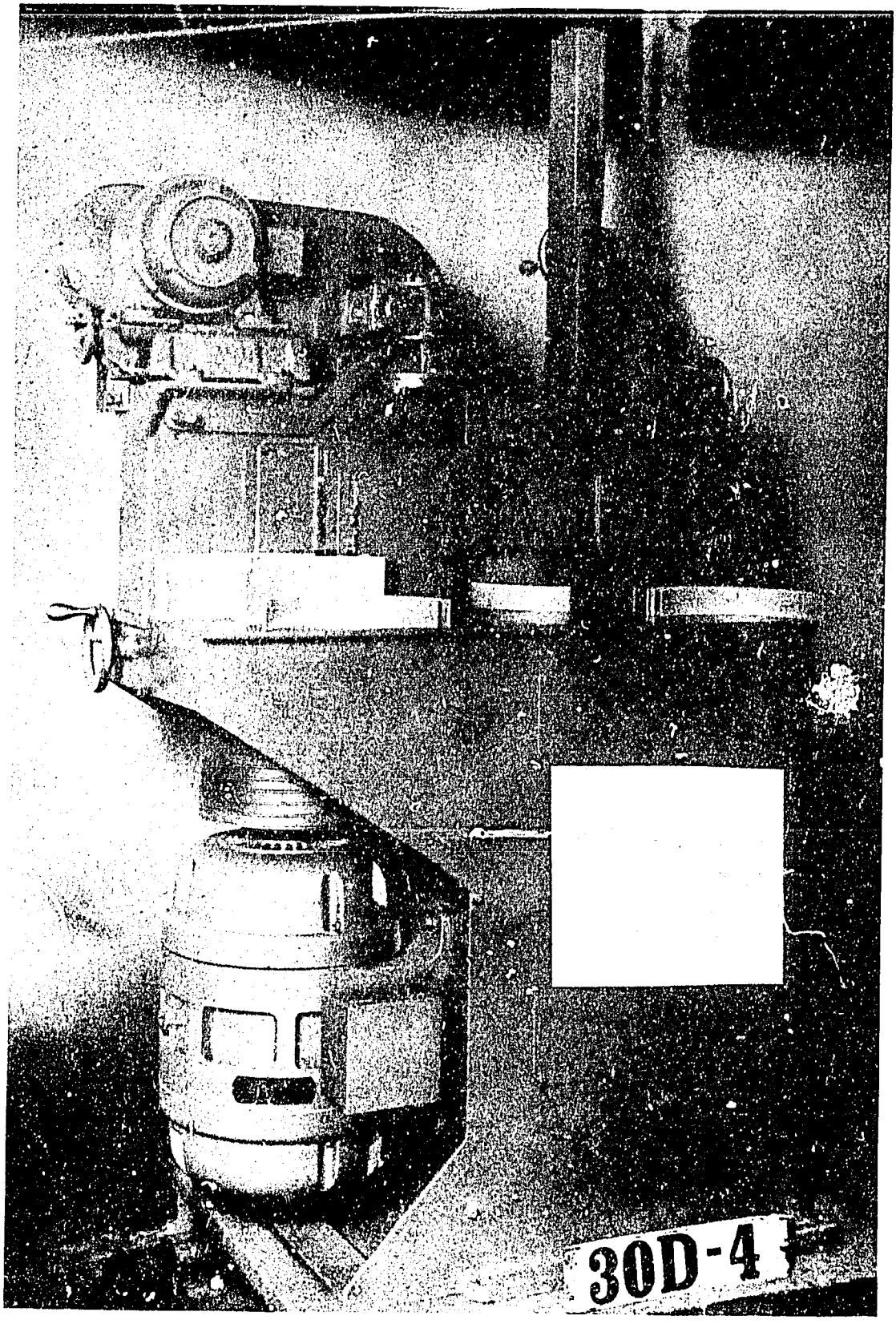

Vertical Spindle Grinder - Set Up To Grind Inside Diameter and Outside Diameter Simultaneously

Figure 11

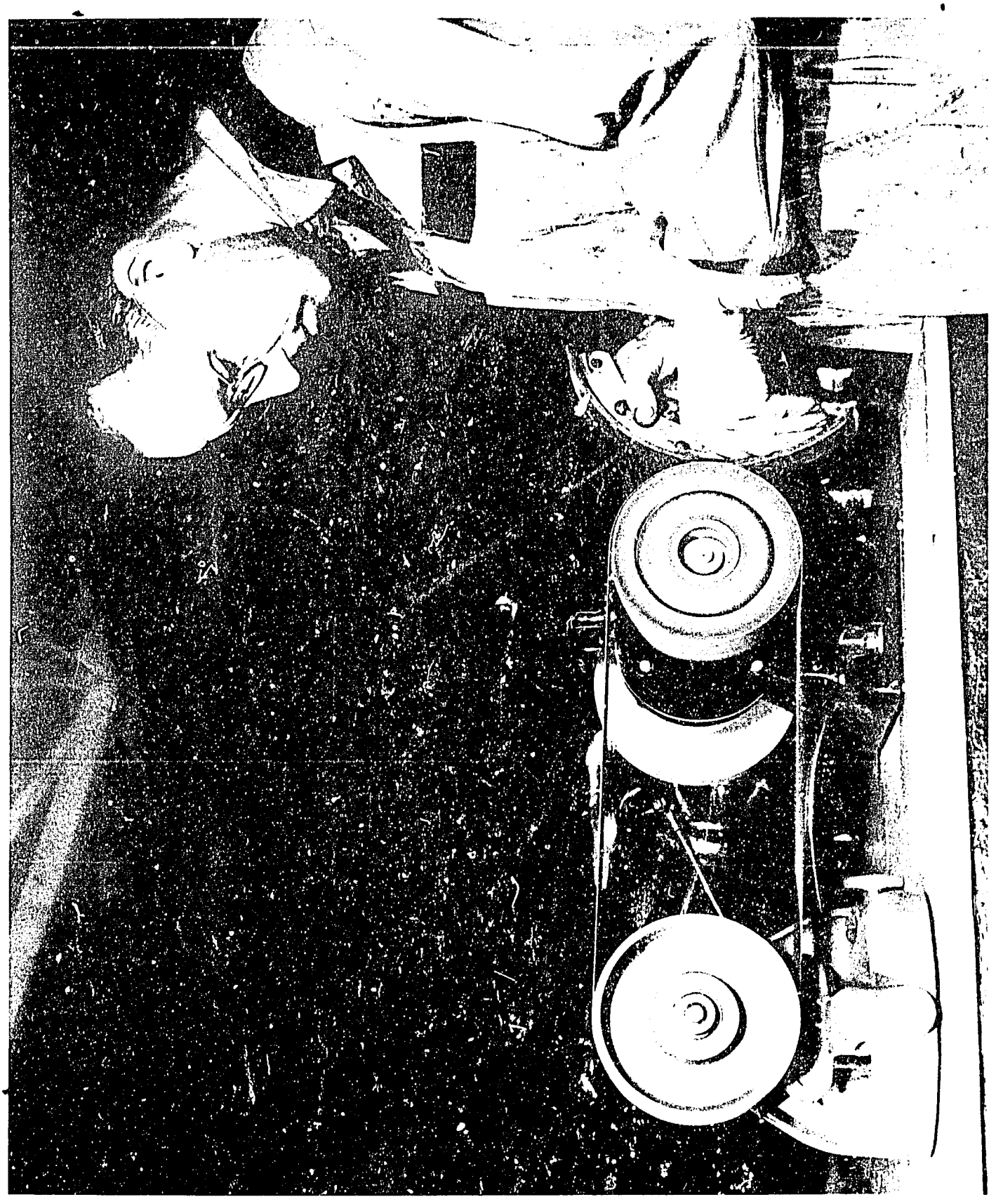

Bench Back Stand - Grinding Brake Lining
Mounted On Shoe

Figure 12

Back Stand Abrasive Belt Grinder - Set-up Shows Cleaning Brake Shoe
(Principally Used In Garages or Brake Repair Shops)
(This Operation Is Now Rarely Performed In U.S.A.)

Figure 13

QUALITY CONTROL

Testing Procedure:

Step 1 - A small sample of the brake lining is teste on an absorption dynamometer. This will indicate li ing performance, including friction range, under var ing unit pressures, temperatures, and drum surface speeds, also the wear rate.

Step 2 - A test on an inertia-type dynamometer is ma of the entire brake assembly. This dynamometer show the input energy from the inertia of a large flywhee so that it may be varied by the flywheel speed and weight to produce a wide range of conditions. A tes of this nature is much slower and more costly than Step 1, but more closely approximates actual vehicle tests.

Step 3 - A final road test on a car or truck gives t following evaluations:

a) Of friction range unburnished
b) " friction stability in the burnish period
c) " effectiveness - that is, deceleration versus pedal pressure under varying speeds and temperatures
d) " fade and recovery characteristics
e) " durability - usually for several thousand miles of operation
f) " noise characteristics
g) " grabbiness

TOOLS AND EQUIPMENT

PRODUCTION:

Quantity	Item	Price
1	Bed-type Scales, 2,000-pound capacity	$1,219
1	Bed-type Scales, 1,000-pound capacity	1,000
1	Sprout Waldron Mixing System	17,300
1	Bench-type Scale, 500-pound capacity	559
1	Hydraulic Press	55,000
1	Multiple Platen Press	60,000
2	Cooling Tanks ($50 each)	100
2	Cut-off Abrasive Saws ($960 each)	1,920
1	Double Disc Grinder	32,165
1	Bench	300
1	Curing Oven with Molds	25,000
1	Grinder - outside radius	11,690
1	Grinder - disc-type (champer)	962
4	Sensitive Drills ($353 each)	1,412
1	Bench and Measuring Tools (1 set)	150
1	Small Stencilling Machine	50
1	Bend Machine	50
1	20-Horsepower Firetube Boiler, complete with gauges and burner - installed	5,129
1	2,000-Gallon Oil Storage Tank - installed	1,000
1	5 -Horsepower Compressor, including motor, tank, and cut-out	810
	Shelving and Fencing	2,300
	Miscellaneous small tools, binders, hand-trucks, pallets, etcetera	10,301
	Total	$228,417

OTHER THAN PRODUCTION:

Quantity	Item	Price
1	Tool Grinder	$200
1	Diamond Wheel Press	350
1	Absorption-type Dynamometer - for testing	30,000
1	Inertia-type Dynamometer - for testing	50,000
	Miscellaneous Tools	1,260
	Miscellaneous Equipment for plant office and foremen	720
	Total	$82,530

Note: Initially the testing equipment may be housed in the compressor room.

FURNITURE AND FIXTURES

Quantity	Item	Average Unit Cost	Total
4	Executive Desks	$215	$860
5	Typewriter Desks	265	1,325
16	Chairs, all types	96	1,536
2	Reference Bookcases	60	120
5	Typewriters	250	1,250
5	File Cabinets	112	560
2	Adding Machines	225	450
1	Calculator	900	900
2	Drawing Boards	100	200
1	Tracing File	128	128
2	Supply Cabinets	65	130
9	Waste Baskets	5	45
	Miscellaneous (benches, racks, lamps, etcetera)		285
	Total		$7,789

PERSONNEL REQUIREMENTS

DIRECT LABOR:

The direct labor force will consist chiefly of semi-skilled workers.

	Number Needed	Hourly Rate Each	Actual Cost
Weight Checkers	2	$2.15	$_____
Mixers	2	2.15	_____
Press Operators	2 or 3	2.15	_____
Cut-off Machine Operators	2	2.15	_____
Double Disc Grinder Operator	1	2.15	_____
Bending Machine Operator	1	2.15	_____
Final Curing Oven Operators	2	2.15	_____
Inside and Outside Grinder Operators	2	2.15	_____
Champering Operator	1	2.15	_____
Drill Press Operators	4	2.15	_____
Stencilling and Marking Operators	2 or 3	2.15	_____
	21 or 23 (Average 22)		

Direct labor annual costs = persons and hourly rate x hours per year = 22 x $2.15 x 2080 hours = $98,384

INDIRECT LABOR:

	Number of Persons	Hourly Rate Per Person	Total Hourly Rate	Actual Cost
Receiving and Shipping Clerks	4	$2.00	$8.00	$_____
Material Handlers	4	1.85	7.40	_____
Inspectors	2	2.25	4.50	_____
Millwright	1	2.50	2.50	_____
Electrician	1	3.00	3.00	_____
Helpers	2	2.00	4.00	_____
Foremen	2	2.50	5.00	_____
Superintendent	1	4.00	4.00	_____
General Manager	1	5.75	5.75	_____
Sales Manager	1	5.50	5.50	_____
Engineer - standards material	1	4.75	4.75	_____
Plant Engineer	1	4.00	4.00	_____
Technician - testing	1	2.15	2.15	_____
Accountant	1	2.50	2.50	_____
Clerks, Secretaries, and Stenographers	4	1.50	6.00	_____
Plant Guard	2	2.00	4.00	_____
Timekeeper	1	2.00	2.00	_____
Janitors	2	2.00	4.00	_____
	32		$79.05	

Indirect labor annual costs = hourly rate x hours per year = $79.05 x 2080 = $164,424

BUILDING

The building required for an operation of this size should contain approximately 17,000 square feet. This will be adequate for initial operation. However, future expansion should be provided for in the form of adjacent land.

A general distribution of areas is as follows:

Division		Area Per Unit	Total Area	Actual Area
Administration:				
General Offices - 1st floor		1,000		
- 2nd floor		1,000	2,000	_____
Manufacturing Areas:				
Raw Material Storage		1,600		
Finished Parts Storage		1,600		
Manufacturing Area - Number 1		2,492		
- Number 2		2,492	8,184	_____
Aisles:				
Aisle - Number 1	- 8 x 120 feet	960		
- Number 2	- 8 x 120 feet	960		
- Number 3	- 8 x 120 feet	960		
- Number 4	- 8 x 28 feet	224		
- Number 5	- 8 x 28 feet	224	3,328	_____
Service Areas:				
Tool Crib	15 x 20 feet	300		
Maintenance Department	15 x 20 feet	300		
Toilet - Number 1		300		
- Number 2		300	1,200	_____
Power Plant:				
Boiler Room	15 x 30 feet	450		
Compressor Room	15 x 30 feet	450	900	_____

Division		Area Per Unit	Total Area	Actual Area
Garage For Test Cars:				
Building	30 x 40 feet		1,200	_____
	Total Square Feet		16,812	

Building 17,000 square feet at $7.00 per square foot = $119,000

This building can be constructed of concrete block. It should have a sprinkler system and a 6-inch concrete floor, with a load bearing strength of 500 pounds per square inch under the presses.

PLANT SITE

The amount of land required for the buildings and service areas shown on the "General Layout" on Page 38 is a plot of 275 feet by 160 feet, or 44,000 square feet. Provisions for expansion may be made by acquiring additional land on the south side of the map.

DEPRECIATION

Item	Cost	Life Years	Depreciation Per Year
Building	$119,000	20	$5,950.00
Production Equipment:			
Durable	218,116	10	21,811.60
Non-durable (dies)	10,301	5	2,060.20
Tools and Equipment Other Than Production	82,530	10	8,253.00
Furniture and Fixtures	7,789	10	778.90
	Total		$38,853.70

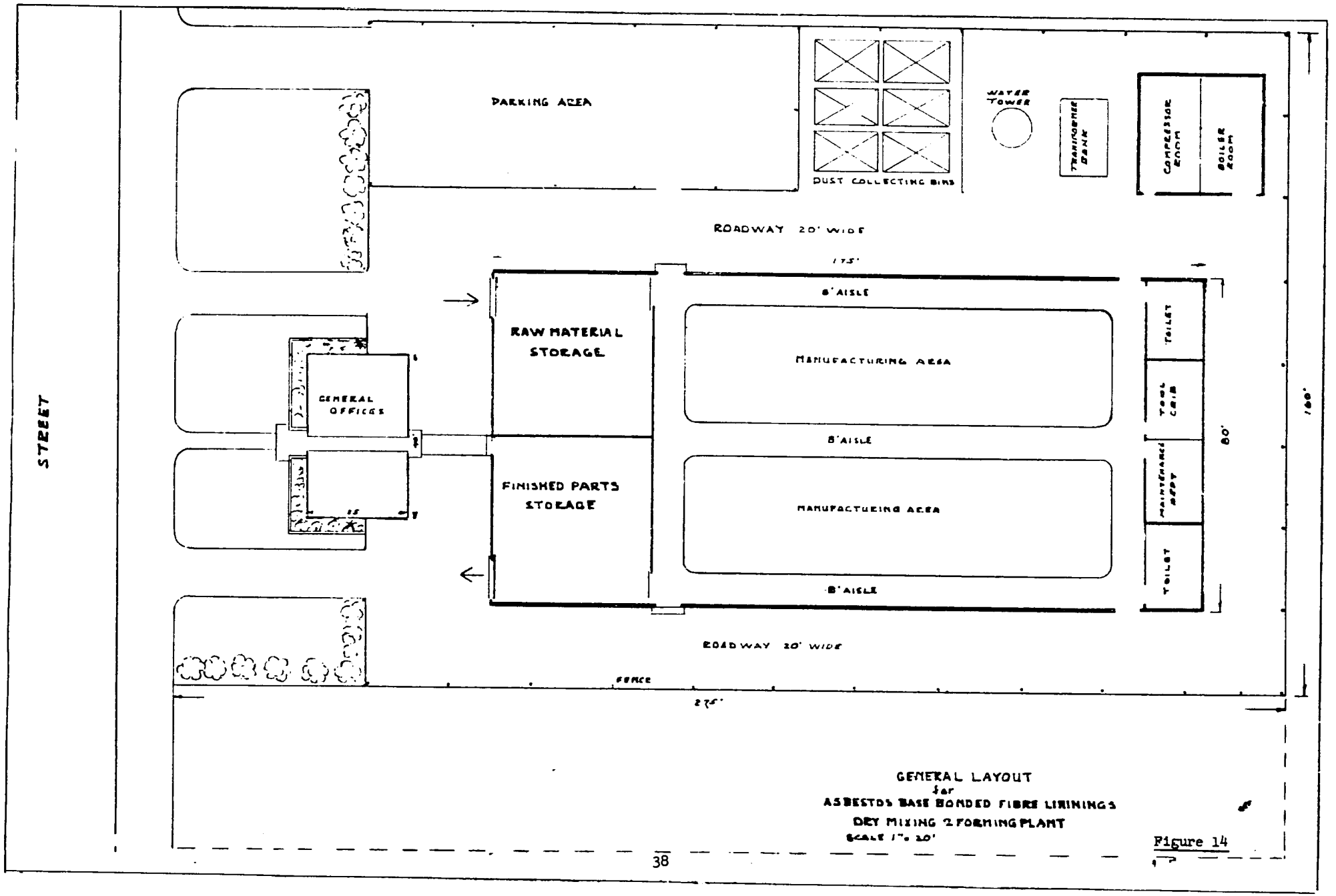

GENERAL LAYOUT
for
ASBESTOS BASE BONDED FIBRE LININGS
DRY MIXING & FORMING PLANT
SCALE 1" = 20'

Figure 14

MANUFACTURING OVERHEAD

Item	Per Year	Actual
Depreciation	$38,853.70	_____
Indirect Labor	164,424.00	_____
Power and Light -		
376,740 kilowatts at $0.0134 per kilowatt	5,048.31	_____
17,337 gallons fuel oil at $0.14 per gallon	2,427.18	_____
Building and Machinery Repairs	20,000.00	_____
Estimated Insurance	9,360.00	_____
Miscellaneous Factory Expenses	7,500.00	_____
Total	$247,613.19	_____

COST OF PRODUCTION

Annual Production:

60,000 sets of automobile brake linings - 8 pieces per set
60,000 sets of truck and bus brake linings - 8 pieces per set
25,000 sets of clutch facings - 2 discs or 24 segments per set

Material:		
Raw Material	$424,694.17	
Indirect Material	19,500.00	
Gross Purchases	$444,194.17	
Freight - In:	42,000.00	
Total	$486,194.17	$486,194.17
Direct Labor:		98,384.00
Manufacturing Overhead:		247,613.19
Total		$832,191.36

WORKING CAPITAL

	Estimated	Actual
Inventory (1 month)	$45,000	
Direct Labor (3 months)	25,000	
Indirect Labor (3 months)	45,000	
Power, Light, and Heat (3 months)	2,000	
Factory Supplies and Repairs (3 months)	8,000	
Work In Progress (10 days)	16,000	
Administration	20,000	
Cash In Bank	20,000	
Total	$181,000	

TOTAL CAPITAL REQUIREMENTS

Working Capital		$181,000	
Fixed Assets:			
Land	-------		
Building	$119,000		
Production Tools and Equipment	218,116	337,116	
Other Assets:			
Other Equipment	82,530		
Miscellaneous Small Tools	10,301		
Furniture and Fixtures	7,789	100,620	
Total Capital Requirements		$618,736	
If material is not available in country and is to be imported, inventory should cover 3 months' requirements and additional working capital will be required of, approximately		$90,000	
Alternate Total Capital Requirements		$708,736	

PROFIT CALCULATION

Gross Sales:			
Number of Sets	Item	Average Wholesale Price Per Set	Total
60,000	Automobile Brake Linings	$7.33	$439,800.00
50,000	Light Truck Brake Linings	20.00	1,000,000.00
10,000	Heavy Duty Truck and Bus Brake Linings	86.50	865,000.00
25,000	Clutch Facings	13.75	343,750.00
	Total Gross Sales		$2,648,550.00
Cost of Production:		$832,191.36	
Cost of Selling: (10 percent of Gross Sales)		264,855.00	
Cost of Administration: (3 percent of Gross Sales)		79,456.50	1,176,502.86
Gross Profit: (Before interest, taxes, and cost of research and development)			$1,472,047.14

SAFETY

The major hazards in this type of plant are dust and fire caused by the dust and the sparks from grinding machines.

It is advisable, therefore, that workmen engaged in mixing and material handling should be equipped with dust masks. Plant instructions pertaining to no smoking rules in dusty areas should be vigorously enforced. Grinding wheels, exhausts, and all equipment apt to produce sparks should be protected by shields, bafflers, and the like.

Dust should be cleared away by proper ventilation and all equipment and floors should be cleaned of dust daily after the plant closes.

A safety education program should be initiated by the plant management to instill in every worker the absolute necessity for obeying safety instructions.

There should also be periodic safety meetings, in which all personnel participates, to stress the need for plant cleanliness and hazard prevention.

TRAINING

The training of personnel for a plant manufacturing brake linings and clutch discs starts, as it should in all industrial plants, after the proper person, having the skills or aptitudes and physical requirements, is selected.

The training steps are:

1. Orientation of new employee.

2. On-the-job training:

    a) Detailed description of each step in the operation, with emphasis on key points.

    b) Quality specifications for the operation.

    c) Safety factors.

    d) Machine care instruction.

The new employee's foreman is responsible for this training. A machine operator or supervisor may assist. The essential part of all employee training is "show how" by qualified employees who "know how".

On-the-job training does not cease when the employee becomes a qualified operator. It is continuous with the objectives of training:

Reduction of waste and spoilage
Improvement of methods
Reduction of absenteeism and labor turnover
Reduction of machine maintenance costs
Improvement of quality
Reduction of accident rate
Improvement of morale

COST CONTROLS

Before starting operations in the plant, standards for all materials, labor, both direct and indirect, and for all controllable overhead items should be set.

Reports on daily production, man-hours required, scrap, and spoilage should be made for each cost center.

Reports on supplies usage, maintenance labor, and maintenance materials usage should be made, using requisitions for supplies and maintenance orders for maintenance labor and materials.

The standards set and the reportage of actuals will give the necessary information for control action and will lay the groundwork for the possible establishment of a standard cost system later.

BUDGET

The dollar volume of this firm's business, in the starting stages, would not be sufficient to justify wide budget coverage or statistical methods of forecasting and other information gathering. Initially, three budgets should be used, each based on historical

records modified by apparent trends or conditions:

Cash Budget
Sales Volume Budget
Purchasing Budget

The Cash Budget shows for each month the cash receipts, budgeted and actual and the variance between them, the cash disbursements, budgeted, actual and variance, and the monthly balance. The column marked "Action" notates the corrective action which the controller recommends. (See sample form in Appendix III, Page 50).

The Sales Budget, showing budgeted sales, actual sales, variance, and corrective action recommended, follows the same form.

The Purchasing Budget follows the same form also, showing total amount budgeted for purchases, the actual amount spent, the variance, and a column showing the sum of the variances. The "Action" column notates corrective action take or recommended.

SUMMARY

All equipment used in the manufacture of friction material, such as brake linings, clutch discs, etcetera, are of standard make and readily available.

The manufacturing operations are simple and easily taught.

However, the composition of the mixes (See Appendix I, Pages 47 and 48, for formulae samples) and the methods for heating and curing are usually developed by each manufacturer through his own or somebody else's research. Innumerable varieties of "mix" are in use and manufacturers strive continually to improve the quality of their products.

It seems, therefore, that any one contemplating the manufacture of friction material should either first develop his own mix or endeavor to obtain license and technical assistance agreements from successful friction material manufacturers.

Resins which are indigenous to a country might be developed and used instead of imported ones. As the powdered resins have to be kept dry, it is essential that they be kept

in air-tight containers.

The plant and process described herein may be adapted to the manufacture of a great variety of brake linings and clutch discs, as the raw materials are the same for all. Sizes, shapes, forms, rectangular bands, etcetera, are the only differences between them.

With the increased use of automotive equipment, the market for brake linings should be a steady one. Manufacturers of new cars and equipment, repair shops, and wholesalers serving repair shops are the natural market for the products of such a plant.

Although the operations of this type of plant require primarily semi-skilled labor, the mixing and development of mixes, and the testing procedures, require skilled laboratory technicians working under the direction of a competent engineer, chemist, or the like.

If it is desirable to postpone capital investment in research and testing equipment, these operations can be turned over, under contract, to a technical university having the required facilities and personnel.

Financial Plan

Suggestions for procuring capital required:

1. Twenty-year mortgage on land and building.

2. Sale and lease-back of land and building.

3. Bank financing of equipment.

4. Discounting of good accounts receivable.

5. Sale of share of ownership.

BIBLIOGRAPHY

Torque Converters, Peter M. Heldt
Chilton Company, Philadelphia, Pennsylvania

Braking Performance of Motor Vehicles
U. S. Department of Commerce - Bureau of Public Roads

Motor Age
Chilton Company, Philadelphia, Pennsylvania

Journal
Society of Automotive Engineers, New York, New York

Better Braking - How?
Society of Automotive Engineers, New York, New York

Data Manual
Friction Materials Standard Institute, Inc.
New York, New York

Brake Linings, Stenhardt
Bendix Aviation Corporation
Marshall-Eclipse Division
Troy, New York

Production Handbook, C. G. Carson
Ronald Press, New York, New York

Principles of Industrial Management, Alford
Ronald Press, New York, New York

General Developments of Various Phases in Brake Lining Formulation, Manufacturing, and Testing Techniques as a Result of Higher Speeds of Cars and Greater Load Demands on Brakes, H. Stolar
Bendix Aviation
Marshall-Eclipse Division
Troy, New York

Discussions on Brake Lining Quality, E. W. Drislane
Bendix Aviation
Marshall-Eclipse Division
Troy, New York

Brake Lining Manufacturing at Marshall-Eclipse, H. Stolar
Bendix Aviation
Marshall-Eclipse Division
Troy, New York

APPENDIX I

U. S. Patent 2.081.578 - Friction Brake Lining:

Ingredients	Weight
Rubber	77 ounces
Asbestos Fibre	112 "
Graphite	28 "
Zinc Oxide	28 "
Sulphur	42 "
Gasoline	368 "
Phenozic Resin - powdered	22 "

French Patent 826,687 - Friction Brake Lining:

Ingredients	Weight
Asbestos Fibres	40 kilograms
Cement	15 "
Synthetic Resin	45 "

Formula I (Sample) - Brake Lining:

Ingredients	Parts
Short Fibre Asbestos	600
Rubber from 30 percent Latex	100
Sulphur	30
Graphite	10
Powdered Lead	7
Accelerator 808 (DuPont)	2
Carbon Black	15

Asbestos is made into water slurry containing small amount of sodium hydroxide. Sulphur, graphite, powdered lead and carbon black are made into water paste and mixed with asbestos slurry. Water is then removed by filtration to give a concentration of 10 percent solids.

Latex, to which accelerator 808 has been added, is then mixed with slurry, molded to shape, dried, and set and vulcanized in open steam for approximately 2 hours at 287 degrees Fahrenheit.

Formula II (Sample) - Brake Lining:

Ingredients	Parts
Asbestos Fibre	45
Magnesium Oxide	3.6
Rubber	18
Sulphur	9
Graphite	6
Litharge	6
Iron Oxide	3
Kaolin	9.1

QUALITY CONTROL
SCORING SHEET

Sample of Lining to be Selected	Frictional Value	Fade-Out or Build-Up	Wear	Scoring	Effect of Heat	Odor	Effect of Water	Effect of Oil
Ideal Lining	Suitable For The Brake On Which It Is To Be Used	None	Not More Than 0.006 Inches Per 1000 Miles	None	None	None	None	None
1.								
2.								
3.								
4.								

This is a simplified sheet for recording results of tests to aid in selection of brake linings.

APPENDIX III

CASH BUDGET FORM

CASH BUDGET
1959

BALANCE JAN 1 _____

	CASH RECEIPTS			CASH DISBURSEMENTS				
MONTH	BUDGET	ACTUAL	VARIANCE	BUDGET	ACTUAL	VARIANCE	BALANCE	ACTION
JAN								
FEB								
MAR								
APR								
MAY								
JUNE								
JULY								
AUG								
SEPT								
OCT								
NOV								
DEC								
TOTAL FOR YEAR								

APPENDIX IV

STOCK RECORD

ITEM

QUAN REC'D	DATE	ORDER NO	QUANT. ASSIGNED	AVAIL. BALANCE	QUANT. ISSUED	BIN BALANCE	QUAN REC'D	DATE	ORDER NO	QUANT. ASSIGNED	AVAIL. BALANCE	QUANT. ISSUED	BIN BALANCE

REQUIREMENTS

DESC. OR PART NO.

DATE	ORDER NO PROJECT NO	FOR ASSEMBLY	TOTAL QUANT.	JAN.	FEB	MAR.	APR.	MAY	JUN	JULY	AUG.	SEP.	OCT	NOV.	DEC.

Color-Cream

Color-White

Sample Control Forms: Stock Record . Requirements

APPENDIX V

RECEIVING RECORD 31258

DATE _____ 19__

RECEIVED FROM _____

VIA _____ CHARGES _____ TERMS _____

ARTICLES	DESCRIPTION

REMARKS:-CONDITION, ETC.

REC'D BY	CHECKED BY	DELIVERED TO

MAKE YOUR RECORD
ACCURATE AND COMPLETE

FORM NO. 160

258

31258

19__

MAKE YOUR RECORD
ACCURATE AND COMPLETE

FORM NO. 160

Sample Control Form: Receiving Record (3 Copies)

REQUISITION ON PURCHASING DEPARTMENT

To

Date _____ 19__

Purchasing Agent: Please order items listed below

Order No. _____

Ship to _____ When Wanted _____

QUANTITY	DESCRIPTION	FOR

BUDGET CONTROL

Allowance for Period $

Balance Available $

Amt. this Purchase $

Remaining Balance $

Ordered By

Approved By

☐ FORM NO. 139

BUDGET CONTROL

Allowance for Period $

Balance Available $

Amt. this Purchase $

Remaining Balance $

Ordered By

Approved By

☐ FORM NO. 139

Sample Control Form: Purchase Requisition (2 Copies)

APPENDIX VII

MATERIAL REQUISITION

Date _____ 194____ Job No. _____

STOREKEEPER: PLEASE SUPPLY

DELIVER NO MATERIAL WITHOUT A REQUISITION

QUAN	DESCRIPTION	PRICE	AMOUNT

PRICED BY	EXTENDED BY	CHECKED BY	ENTERED ON STORES CARDS	SIGNED

FORM NO. 137 ☐

PRICED BY	EXTENDED BY	CHECKED BY	ENTERED ON STORES CARDS	SIGNED

FORM NO. 137 ☐

Sample Control Form: "Withdrawal From Stores" (2 Copies)

PURCHASE ORDER

No. 2653

SHOW THIS NUMBER ON PACKAGES, SHIPPING PAPERS & INVOICE.
PLEASE ACKNOWLEDGE RECEIPT OF THIS ORDER, ADVISING SHIPPING DATE.

TO

DATE

F.O.B.

SHIP VIA

DATE WANTED

QUANTITY	DESCRIPTION	PRICE

SAMPLE Form

MOORE BUSINESS FORMS, INC.—ELMIRA, N. Y.

MOORE BUSINESS FORMS, INC.—ELMIRA, N. Y.

Sample Control Form: Purchase Order (3 Copies)