PN-ABI 337
ISN 72158

PROGRAM OF DEVELOPMENT STUDIES
121 Sewall Hall
WILLIAM MARSH RICE UNIVERSITY
Houston, Texas 77001

Paper No. 31

A DIAGRAMMATIC EXPOSITION OF GENERAL EQUILIBRIUM TAX AND EXPENDITURE INCIDENCE ANALYSIS WITH ONE IMMOBILE FACTOR

By

Charles E. McLure, Jr.

Fall, 1972

The author is Professor of Economics at Rice University. This paper reports research related to AID contract no. csd-3302, on Distribution of Gains, Wealth and Income from Development. Program Discussion Papers are preliminary materials circulated to stimulate discussion and critical comment. References in publications to Discussion Papers should be cleared with the authors to protect the tentative character of these papers.

PN ABI-337

Diagrammatic Exposition of General Equilibrium Tax and ..
336.294 Rice Univ. Program of Development Studies.
M261 Diagrammatic Exposition of General Equilibrium Tax and Expenditure Incidence Analysis with One Immobile Factor. Charles E. McLure. 1972.
NUDC
ISN-6592
P343/08261
38 p. Illus.
Bibliography: p. 37.
Contract AID/csd-3302.
Proj. 931-17-995-534.

1. Taxation. 2. Economic research. 3. Models - Taxation.
I. McLure, Charles E. II Title. III. Contract.

A Diagrammatic Exposition of General Equilibrium Tax and Expenditure Incidence Analysis with One Immobile Factor

1. Introduction

In the past ten years the incidence analysis pioneered by Arnold Harberger in his famous article in the 1962 Journal of Political Economy has become the standard theoretical tool of economists concerned with the incidence of taxes in a general equilibrium setting.[1] But many economists may find this analysis largely unintelligible because of the mathematical manipulations involved. Therefore a brief diagrammatic presentation of one version of the Harberger model is offered here in order to make this extremely useful model available to a wider audience. In this paper only the case in which one factor is mobile between sectors and one factor immobile is presented. But both tax and expenditure incidence are examined. In fact, it will simplify understanding of the model to consider expenditure incidence before tax incidence.

In addition to the basically expository objective described above, this paper has two further purposes. First, the "supply curve" relating percentage changes in the output of the taxed good to changes in relative product prices is developed explicitly. Use of this supply curve, in conjunction with the "demand curve," facilitates comparison with traditional partial equilibrium incidence analysis. Moreover, we are able to see quite clearly how the various parameters of the model determine the supply response to changes in relative prices. By comparison, no discussion of the Harberger model up till now has developed an explicit product supply relation. Rather they have dealt primarily with responses in

[1] See McLure [1972b] for a more detailed description and appraisal of the original Harberger model, its extensions, and applications.

markets for factors.[2]

Second, strictly speaking, the Harberger model is appropriate for the analysis of only infinitesimally small changes in taxes, since all the equations are written in terms of differentials. The diagrammatic exposition enables us to see quite clearly the pitfalls that threaten one who uses the Harberger model to analyze tax changes that are not small. In particular, the model is developed initially under the assumption that the linearization of economic relationships inherent in the Harberger formulation in terms of differentials is acceptable. This is done solely as a matter of expository convenience. But section 6 discusses the propriety of linearization when discrete changes in taxes are involved. Though a detailed discussion of the question is beyond the scope of this paper, the importance of linearization in the case under examination is examined briefly.

The diagrams presented here are used primarily to explain the structure and workings of the model and to isolate the crucial parameters of the analysis. No attempt is made to present the results of the analysis in detail, except for polar cases, since anyone interested in the results for intermediate cases would undoubtedly turn to the algebraic formulation. Thus this paper may help readers to understand the algebraic version, but it is no substitute for the more detailed mathematical treatment. Nevertheless, the link between the algebraic and diagrammatic expositions is made quite explicit by the textual development of the equations plotted in each diagram.

Because this paper is intended to be primarily expository, the assumptions underlying the analysis are spelled out in detail. But for the most part this

---

[2] Of course in the mathematical treatment of the model, all the equations are solved simultaneously. The point is that the demand relation has never been juxtaposed against a supply relation derived from underlying conditions in factor markets and production functions. For a more detailed discussion of using the Harberger model to "go behind the supply curve" of traditional partial equilibrium analysis, see McLure [1972b].

is done as the various diagrams are developed, rather than as a group at the outset. Thus the reader must be patient if he suspects that some crucial assumption is being neglected; hopefully it will come forth and be explained in due course. Nevertheless, it will be convenient to describe several general features of the model at this point.

First, the model is one in which two factors which are inelastically supplied in total are employed in two competitive industries under constant returns to scale to produce two goods x and y.[3] Capital is assumed to be perfectly mobile between sectors and therefore to earn the same net rate of return in both sectors. On the other hand, labor is assumed to be completely immobile between sectors; thus wage rates net of tax may differ between sectors.

Second, in a model such as that employed here only changes in relative prices (as opposed to changes in absolute prices) can be determined in the absence of an explicit monetary equation. But this in no way limits the usefulness of the model for incidence analysis, which is essentially a question of changes in relative factor returns (incidence on the sources side of income) and changes in relative product prices (incidence on the uses side of income). Thus we are free to choose one good or factor (or some weighted average) as the numeraire by setting the policy induced change in its price equal to zero. Though in general I prefer to use $dP_y = 0$ as the numeraire equation, the diagrammatic analysis is simplified by choosing as our numeraire equation $dP_k = 0$. Of course the outcome in terms of tax-induced changes in real income is in no way dependent upon the choice of numeraire equation. Moreover, it will be convenient, but not essential, to define units of

[3]Throughout this paper reference is to two sectors or industries. In my earlier work I have used the model to investigate interregional incidence and related problems by dealing with two regions rather than two industries; see McLure [1969], [1970a], and [1971b]. This and other applications of the model are straightforward, and hence are ignored in this paper.

products and factors in such a way as to set all prices initially equal to unity. Thus any specific tax is also an ad valorem tax and any change in price is also a fractional change.[4]

Finally, the Harberger model is perhaps the comparative statics model par excellence in the sense that it can be solved for tax-induced changes from a pre-existing equilibrium, but not for either the initial or the final equilibrium solution. Thus in the diagrams of this paper all axes indicate percentage changes in variables, with the initial equilibrium corresponding to zero rates of change of all variables. These changes are given initially in differential terms, following the original Harberger formulation. Extension of the model to cases of discrete changes in variables is discussed in section 6.

2. The Basic Diagram

The basic analytical tool developed here is the four quadrant diagram presented in Figure 1.

In quadrant (a) is plotted the "demand curve," D:

$$dQ_x/Q_x = -E(dP_x - dP_y). \tag{1}$$

(Ignore curve D_E for the moment; it is used in section 3.) This description of demand differs from the standard demand curve in very special ways that must be made explicit. First, the curve relates the percentage change in the demand for good x to the percentage change in the relative prices of goods x and y. Thus it passes through the origin of the quadrant (a) diagram, and the inverse of the absolute value of its slope is the elasticity of demand for good x with respect to relative prices, E.[5] Second, the elasticity of this curve takes account of only

[4] For a more detailed discussion of these issues, see McLure [1970b) and [1971a].

[5] As drawn the curve shows a constant demand elasticity, but it need not do so. This constancy of slope is not so bothersome in the specification of the

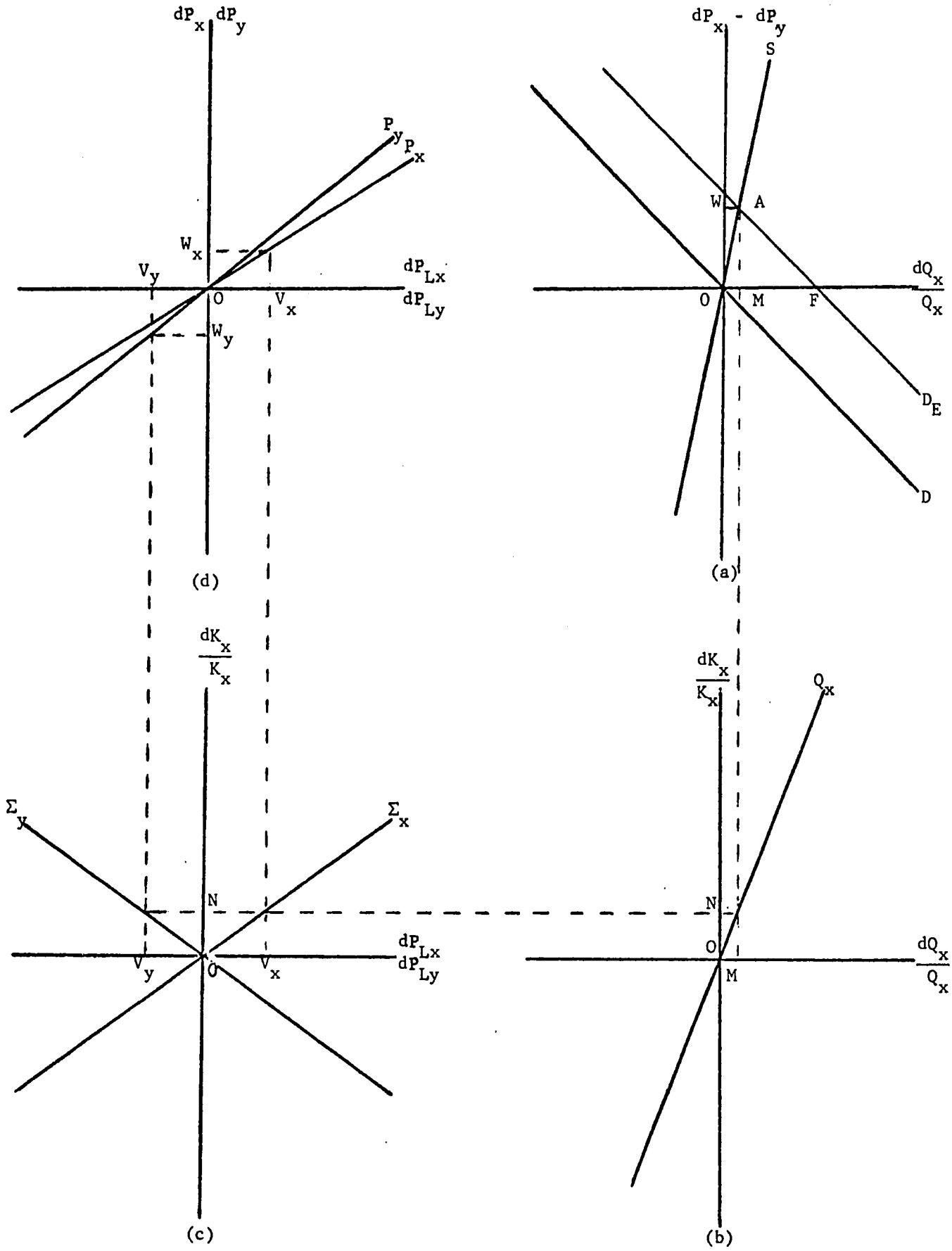

Figure 1: Derivation of Supply Curve and Analysis of Expenditure Incidence

substitution effects on the demand for good x resulting from changes in relative prices. Income effects are ignored initially by using the very special assumption that at the margin all economic groups spend their incomes in the same way. Thus E is the <u>income-compensated</u> elasticity of demand for x with respect to relative prices.

The second curve in quadrant (a), S, which corresponds to the supply curve of traditional partial equilibrium analysis, is derived from the remaining quadrants. The remainder of this section is devoted to describing that derivation. The curve in quadrant (b) is described by the following equation:

$$dQ_x/Q_x = f_K dK_x/K_x + f_L dL_x/L_x = f_K dK_x/K_x. \qquad (2)$$

It describes how output of good x increases if the amount of the mobile factor, capital, combined with the immobile factor, labor, is increased. The curve Q_x relating dQ_x/Q_x, the percentage increase in output of x to dK_x/K_x, the percentage increase in capital used in producing x, has a slope of $1/f_K$, where f_K can be interpreted alternatively as the elasticity of output with respect to this input or as capital's initial share of national output. Of course, this line, too, passes through the origin.

If production exhibits constant returns to scale, as is assumed in the Harberger model, factor proportions are uniquely related to the relative costs of the two factors. Stated differently, the possibility of changing factor proportions in production in response to changes in the relative costs of factors is given by the elasticity of factor substitution in production. The possibilities

---

demand relationship or even of the Σ_x curve of quadrant (c), where a constant slope implies a constant elasticity of factor substitution. But for the curves in quadrants (b) and (d) and for the Σ_y curve in quadrant (c) the constant slope is in general quite unrealistic. This problem, which involves the analysis of differential changes, rather than discrete changes, in the Harberger model, is discussed further in section 6 below. For now the curves are all drawn as straight lines with full knowledge that strictly speaking this is unacceptable for discrete tax changes.

of factor substitution in the two industries are given by the following two equations:

$$\frac{dK_x}{K_x} - \frac{dL_x}{L_x} = -\sigma_x \ (dP_{Kx}^* - dP_{Lx}^*), \text{ and} \tag{3}$$

$$\frac{dK_y}{K_y} - \frac{dL_y}{L_y} = -\sigma_y \ (dP_{Ky}^* - dP_{Ly}). \tag{4}$$

In these equations (and in equations 5 and 6 below) starred terms refer to changes in various factor prices inclusive of factor taxes. That is, they refer to the changes in factor prices that affect entrepreneural decisions and costs of products. They are to be distinguished from their unstarred relatives, which indicate changes in factor prices net of factor taxes, i.e., what factor owners receive. The following relations between factor prices gross and net of factor taxes will be used in section 4:[6]

$$dP_{Kx}^* = dP_K + dT_{Kx} + dT_K \tag{3a}$$

$$dP_{Lx}^* = dP_{Lx} + dT_{Lx} \tag{3b}$$

$$dP_{Ky}^* = dP_K + dT_K \tag{3c}$$

Initially and in the next section we assume that there are no factor taxes, so that factor owners receive all that entrepreneurs must pay for their services. That is, $dP_K^* = dP_K$, etc. Making use of the additional assumptions that (a) labor is immobile between sectors, (b) the total supply of capital is fixed, and (c) capital is chosen as the numeraire, so that $dP_K = 0$, we can rewrite equations (3) and (4) as:

$$\frac{dK_x}{K_x} = \sigma_x dP_{Lx}, \text{ and} \tag{3'}$$

$$\frac{dK_x}{K_x} = -\sigma_y \frac{K_y}{K_x} dP_{Ly}. \tag{4'}$$

---

[6]These equations reflect a choice of taxes to be analyzed that is explained in section 4.

These equations are plotted in quadrant (c) as Σ_x and Σ_y. As written, they show the changes in the utilization of capital in industry x that would result from a given change in the cost of labor in each of the two industries, given that the price of capital is held constant. The slopes of these curves are σ_x and $-\sigma_y K_y/K_x$, respectively, and both curves pass through the origin.

The fourth quadrant converts changes in labor costs in the two industries into changes in product prices. The basic equations are:

$$dP_x = f_L dP_{Lx}^* + f_K dP_{Kx}^* + dT_x \tag{5}$$

$$dP_y = g_L dP_{Ly} + g_K dP_{Ky}^* + dT_y. \tag{6}$$

In common sense terms, these equations state that the percentage increase in the price of a product is the weighted average of the percentage increase in the costs of the two factors, including any factor taxes, plus any ad valorem tax levied on the product. The weights are the initial shares of output of the good in question accruing to the two factors.

Since capital has been chosen as the numeraire, we have the following equations if there are initially no taxes.

$$dP_x = f_L dP_{Lx} \quad \text{and} \tag{5a}$$

$$dP_y = g_L dP_{Ly}. \tag{6a}$$

These are plotted in quadrant (d) as P_x and P_y. As is true of all the curves in the initial equilibrium without taxes, these curves pass through the origin.

Having derived the curves in quadrants (b) - (d) from the basic equations of the Harberger model, all that remains is to use them to derive the "supply curve" for x with respect to relative prices. This is a straightforward exercise in the use of the diagrams. First, we choose an arbitrary point on the horizontal axis in quadrant (a) as a starting point. For example, we can choose point M. Moving

vertically to quadrant (b) we see that if output of good x is to increase by the fraction OM, the capital stock in industry x must increase by the fraction ON. But this reallocation of capital implies a rise in the wage rate in industry x of OV_x and a fall in the wage rate in industry y of OV_y, as indicated by curves Σ_x and Σ_y in quadrant (c).

These changes in wage rates in the two industries are transmitted to product prices in the way described by curves P_x and P_y in quadrant (d). Thus the fractional increase in the wage rate of OV_x in industry x produces a fractional rise in the price of good x of OW_x. Similarly, the price of good y falls by the fraction OW_y in response to the wage rate in the industry falling by the fraction OV_y. Thus we have seen that the fractional increase in the output of good x of OM implies a change in the relative prices of goods x and y of W_yW_x. This change in relative prices can be plotted as OW in the quadrant (a) against OM to produce A, one point on the supply curve of good x with respect to relative product prices. Repeating the procedures in this and the previous paragraph for other points on the horizontal axis in quadrant (a) produces the entire supply curve.

Before considering how taxes and expenditures affect the curves and values of the variables in the model, it will be convenient to digress briefly at this point to examine the determinants of the shape of the supply curve. First, we can describe the supply curve in general terms in the following way:

$$dQ_x/Q_x = S(dP_x - dP_y). \tag{7}$$

S is, of course, the elasticity of supply of good x with respect to relative prices. To obtain an expression for the elasticity of supply that utilizes information about conditions in factor markets and the production function we can repeat the reasoning of the last two paragraphs. Thus:

$$dK_x/K_x = dQ_x/Q_x \cdot f_K$$

$$dP_{Lx} = dK_x/K_x\sigma_x$$

$$dP_{Ly} = -K_x dK_x/K_x\sigma_y K_y$$

$$dP_x = f_L dP_{Lx}$$

$$dP_y = g_L dP_{Ly}$$

$$\begin{aligned} dP_x - dP_y &= f_L dP_{Lx} - g_L dP_{Ly} \\ &= f_L dK_x/K_x\sigma_x + g_L K_x dK_x/K_x\sigma_y K_y \\ &= (f_L/\sigma_x + g_L K_x/K_y\sigma_y) dK_x/K_x \\ &= (f_L/\sigma_x + g_L K_x/K_y\sigma_y) dQ_x/Q_x f_K. \end{aligned}$$

From the last expression we can calculate the elasticity of supply with respect to relative prices as:[7]

$$S = \frac{f_K\sigma_x\sigma_y}{f_L\sigma_y + g_L\sigma_x K_x/K_y} \cdot \tag{8}$$

The determinants of the elasticity of supply can be seen directly from equation (8) to be (a) the elasticities of factor substitution in the two industries, (b) the allocation of the total capital stock between the two industries, and (c) the initial share of labor in the two industries. Partial differentiation of equation (8) reveals that <u>ceteris paribus</u> the supply of good x is more elastic the easier is factor substitution in either industry, the smaller is the fraction of the total capital stock devoted to production of good x, and the smaller is labor's share of output in each industry. The same thing is revealed by inspection of Figure 1. The steeper are curves Σ_x and Σ_y in quadrant (c), the less is any change in the allocation of capital between the two industries

[7]Under the linearization assumption followed in the first four sections, S is a constant. Nonlinearity is discussed briefly in section 6.

reflected in relative factor prices and hence (given the numeraire equation $dP_k = 0$) in relative product prices. Thus the greater are σ_x, σ_y, and K_y/K_x, the greater is the elasticity of product supply with respect to relative product prices. Similarly, ceteris paribus, the flatter are curve Q_x in quadrant (b) and curves P_x and P_y in quadrant (d), the less effect a given change in the quantity of good x has upon relative product prices. But flatness in any of these curves implies a low labor share in one industry.

The economics behind these results is easy to appreciate. First, if factor substitution in industry x is easy, capital can be absorbed with relatively little rise in the wage rate in that industry and hence little rise in the price of good x. Similarly, if labor can easily be substituted for capital in industry y, the outflow of capital necessary to expand production of good x will not greatly lower the wage rate in industry y and the price of good y. Essentially the same result occurs if relatively little of the total capital stock is used in industry x. In such a case the capital inflow needed to expand production of good x can occur without greatly affecting factor proportions, relative factor returns, and the product price in industry y.[8] Finally, the greater is capital's share in industry x, the less capital flow is induced by a given fractional change in the output of that industry. This, in turn, is reflected in a smaller change in wage rates and product prices in the two industries. And the smaller is labor's share in either industry, the less responsive is the price of the product of that industry to a given change in the relevant wage rate.

---

[8]The numeraire assumption $dP_K = 0$ is not equivalent to an elastic supply of capital to industry x. This elasticity, which depends upon the values of σ_y and K_x/K_y, is a matter of response to changes in relative factor returns and is independent of the choice of numeraire.

It may be worthwhile, to carry this reasoning further, to note the value of the supply elasticity for extreme values of the parameters just discussed. If substitution is impossible in either industry, supply is completely inelastic. Given the immobility of labor, output of x cannot expand unless factor substitution is possible in both industries.

If in industry x factors are perfect substitutes, the elasticity of supply depends upon the elasticity of substitution in the other industry, factor shares in both industries, and the split of capital between the industries. If perfect substitution characterizes production in industry y, the supply elasticity depends on the ease of factor substitution and relative factor shares in industry x. Finally, if virtually all of the capital stock is used in industry x, the supply curve for that industry is quite inelastic. But if almost none of the capital stock is used in the industry, the elasticity of supply depends crucially upon the elasticity of substitution and factor shares in the industry, just as when σ_y is infinite.

Finally, to add realism to this theoretical exercise, it might be useful to calculate the elasticity of product supply for various values of the crucial parameters. We can begin by calculating the elasticity if virtually none of the capital stock is being utilized in industry x, since inspection of equation (8) reveals that this assumption yields the largest possible value of S, given the values of the other parameters. Table 1 gives the values of S in the limit as K_x/K_y approaches zero, for the stated values of σ_x and factor shares in industry x. One is immediately struck with the fact that these elasticities are all quite low; only at the extreme limits of the acceptable range of values for σ_x and factor shares does the elasticity of product supply equal or exceed unity. And for the most realistic assumptions of values of the parameters ($.6 \leq \sigma_x \leq 1.0$ and $.6 \leq f_L \leq .8$), the

Table 1: Elasticity of Product Supply with Respect to Relative Prices, for Various Values of σ_x, f_K, and f_L

(Limit as $K_x/K_y \to 0$)

			Value of σ_x						
f_K	f_L	f_K/f_L	.2	.4	.6	.8	1.0	1.2	1.5
.1	.9	.11	.02	.04	.07	.09	.11	.13	.17
.2	.8	.25	.05	.10	.15	.20	.25	.30	.38
.3	.7	.43	.09	.17	.26	.34	.43	.51	.64
.4	.6	.67	.13	.27	.40	.53	.67	.80	1.00
.5	.5	1.0	.20	.40	.60	.80	1.00	1.20	1.50

Formula: For $K_x/K_y = 0$, $S = f_K\sigma_x/f_L$

elasticity of supply falls within a range of .15 to .67. All things considered, it seems likely that in industries characterized by the kind of immobilities assumed here the elasticity of supply is probably no greater than 1/3 to 1/2. The elasticity of supply is, of course, lower than shown in Table 1 if K_x/K_y is not near zero. In particular, if $f_L = g_L$ and $\sigma_x = \sigma_y$, for example, the elasticity of supply is only half as great as shown in Table 1 if $K_x = K_y$ and it is only 1/4 as great if $K_x = 3K_y$.

In constructing the diagrams in this paper, what seem to be more or less realistic values of these parameters are used. In particular, we use $\sigma_x = \sigma_y = .7$, $f_L = .6$, $g_L = .8$, and $K_x/K_y = 1$. (Different labor shares in the two industries are employed so that curves P_x and P_y in quadrant (d) do not overlap and K_x/K_y is not assigned a value near zero so that curve Σ_y in quadrant (c) will not be vertical.) This gives a value of S of .20.

[9] If we reverse the assumptions to make capital the immobile factor and labor the mobile factor, as in the usual examples of the short run in price theory, the elasticity of supply is greater than shown in Table 1 by a factor of $(f_L/f_K)^2$. But one can expect elasticities of factor substitution to be considerably higher ex ante or in long run equilibrium (when capital is mobile) than they are once the capital stock is given.

If both factors are mobile between sectors, the elasticity of supply

of good x with respect to relative prices can be written as follows:

$$S = \frac{\sigma_y + \sigma_x\left(f_K\frac{L_x}{L_y} + f_L\frac{K_x}{K_y}\right)}{(f_K - g_K)\left(\frac{K_x}{K_y} - \frac{L_x}{L_y}\right)} .$$

For ease of computation this can be rewritten as:

$$S = \frac{\frac{Q_y}{Q_x}g_K g_L \sigma_y + f_K f_L \sigma_x}{(f_K - g_K)^2} .$$

Finally, if we assume for convenience that $\sigma_x = \sigma_y = \sigma$, we can derive the following tables reporting values of $S/\sigma = \frac{Q_y g_K g_L / Q_x + f_K f_L}{(f_K - g_K)^2}$.

Values of S/σ, if $Q_y = Q_x$:

f_K/g_K	.1	.2	.3	.4	.5
.1	∞	25	7.5	3.7	2.1
.2	25	∞	37	10	4.6
.3	7.5	37	∞	45	11.5
.4	3.7	10	45	∞	49
.5	2.1	4.6	11.5	49	∞

Value of S/σ, if $Q_y = 10Q_x$:

f_K/g_K	.1	.2	.3	.4	.5
.1	∞	169	54.8	27.7	16.2
.2	106	∞	226	64	29.6
.3	27.8	181	∞	261	67.8
.4	12.7	46	234	∞	274
.5	7.2	20.6	58.8	265	∞

Value of S/σ if $Q_y = 100Q_x$:

f_K/g_K	.1	.2	.3	.4	.5
.1	∞	1609	527.3	267.7	57.8
.2	916	∞	2116	604	279.6
.3	230.3	1621	∞	2421	630.3
.4	102.7	406	2124	∞	2524
.5	156.8	180.6	531.3	2425	∞

For larger values of Q_y/Q_x, S/σ rises nearly in proportion to Q_y/Q_x for given values of f_K and g_K.

Comparing the values in these three tables with those in the column for $\sigma_x=1$ in Table 1 we see that supply is less elastic if one factor is immobile than if both factors are mobile.

3. Expenditure Incidence

Thus far only the supply and demand curves and the derivation of the former have been given; no change from the initial equilibrium position has been analyzed. In this and the next section the analytical framework developed in the last section is used for the comparative statics analysis of the distributional implications of tax and expenditure policies. As noted earlier, it will be convenient to begin the investigation with the infrequently examined, but analytically simpler, question of the incidence of government expenditures. Then we can proceed to the more complex question of tax incidence in section 4.[10]

An increase in government spending, financed in a neutral way, will have no effect on relative prices and the distribution of income unless at the margin the government spending pattern differs from the private pattern.[11] But if the government spends a larger (smaller) share of its increased financial resources on good x than would have occurred at the margin in the private sector, the demand curve shifts to the right (left) and relative prices and the distribution of income change.[12] We can trace this through the four-quadrant diagram.

The shift in the demand curve D is shown in Figure (1), D_E being the shifted

[10] In this paper only the incidence of government purchases of final products is considered. The much more complicated problems of the incidence of direct governmental employment of factors, which is considered in McLure [1972a], is relatively difficult to fit into the diagrammatic analysis, though it is not impossible.

[11] Reference to neutral financing can be interpreted to mean financing through a general sales or income tax (which in this model are equivalent). That such a tax is distributionally neutral is shown in the next section. For a more complete discussion of distributionally neutral financing and expenditure patterns, see McLure [1971a] and [1972a].

[12] There are, of course, polar cases in which relative prices do not change and in which changes in relative prices do not affect the distribution of income. Qualifying remarks of this type are not repeated in the discussion that follows.

curve.[13] The intersection of the supply curve S and the shifted demand curve yield a new equilibrium position A, in which output has been increased by the fraction OM and the price of x has risen relative to that of y by OW.[14]

We can use some simple algebra to learn more about this outcome. First, the expression for the supply curve in quadrant (a) is $dQ_x/Q_x = S(dP_x - dP_y)$, as noted above. The shifted demand curve can be written as follows:

$$dQ_x/Q_x = -E(dP_x - dP_y) + dQ_G/Q_x \ , \tag{1a}$$

where dQ_G/Q_x is the fractional amount by which demand shifts toward good x because of public procurement, at the initially prevailing prices. Solving these two equations simultaneously yields the following:

$$dP_x - dP_y = dQ_G/Q_x(S + E), \text{ and} \tag{9}$$

$$dQ_x/Q_x = SdQ_G/Q_x(S + E).\underline{15/} \tag{9a}$$

The more elastic is either supply or demand the less the price of x rises relative to the price of y as demand shifts toward good x. Similarly, the more price elastic is demand, the less the quantity of good x rises as demand shifts to good x. But the more elastic is supply the more output responds to the shift in demand.

Quadrant (a) can tell us the incidence on the side of uses of income of a

---

[13] The demand curve shifts by $(m_g - m_p)dG/Q_x$, where m_g and m_p are the public and private marginal propensities to consume good x and dG is the size of the expenditure program. If m_g and m_p are equal, no shift occurs.

[14] A second curve could be added to quadrant (b) to show how any change in capital utilization is reflected in the output of good y through the following equation:

$$dQ_y/Q_y = -g_K K_x dK_x/K_x K_y. \tag{2a}$$

This equation does not, of course, figure in the final solution, except to give the change in output of good y.

[15] These results can be employed to derive those given in the mathematical treatment in McLure [1972a]. Alternatively, the results given there can be reduced to the form given in the text.

shift in purchases toward product x. But to learn about incidence on the side of sources of income it is necessary to "go behind" the supply curve to learn how relative factor prices are affected. This can easily be done, of course, since the supply curve was derived from the more fundamental relationships described in quadrants (b) - (d). In particular, for the policy in question we need only note that the indicated increase in output of good x implies an inflow of capital of ON, which in turn raises the wage rate in x by the fraction OV_x. By the same token, the wage rate in industry y falls by OV_y, as capital flows from that industry.[16] Finally, though strictly speaking the question is of no interest from the standpoint of incidence analysis, since in that context only changes in relative product prices and relative factor prices are relevant, we might want to solve for the changes in the prices of goods x and y, given that $dP_K = 0$.[17] This we can do in quadrant (d); the price of good x rises by OW_x and that of good y falls by OW_y. Of course, W_yW_x equals OW in quadrant (a) by construction.

---

[16] The results given in equations (9) and (9a) and equations (2) - (4) can be used to solve for these capital flows and price changes. Thus:

$$dK_x/K_x = SdQ_G/Q_x f_K(S + E), \tag{9b}$$

$$dP_{LX} = SdQ_G/Q_x \sigma_x f_K(S + E), \text{ and} \tag{9c}$$

$$dP_{Ly} = -SK_x dQ_G/Q_x K_y \sigma_y f_x(S + E). \tag{9d}$$

These results, though different in appearance, are the same as those reported in McLure [1972a]. The same approach can be employed to solve for the changes in absolute product prices, given $dP_K = 0$.

[17] One reason for doing this is that we might wish to choose an alternative numeraire, say good y. To convert percentage changes in a given price under the numeraire assumption $dP_K = 0$ to percentage changes under an assumption of $dP_y = 0$ is a simple matter. One need only subtract from each percentage price change as originally calculated (including dP_K) the calculated value of dP_y. An alternative and attractive approach is to formulate the diagrammatic analysis presented here under the assumption of $dP_y = 0$. Space constraints dictate that this alternative formulation be left as an exercise for the interested reader.

4. Tax Incidence

The model presented here accomodates analysis of taxes levied on nine distinct tax bases: value added, retail sales, on income (1), only one of the two products (2), only one of the two factors in all its uses (2), and one of the two factors in one of the two industries (4). But in the neoclassical world of this model we need examine explicitly the incidence of only four of the nine taxes. The incidence results for the rest of the nine taxes follow directly by subtraction.[18] Yet it will be useful for the present purpose to examine the incidence of more than the minimum number of taxes. In particular, we will examine the incidence of the general sales tax, the tax on product x, the tax on both uses of the mobile factor, the tax levied on the mobile factor in one industry, and the tax levied on the immobile factor in one industry. In each case we assume that tax proceeds are used to finance a distributionally neutral increase in public spending.

We can begin the analysis with the tax on the output of industry x. Such a tax affects only two curves in the analysis, the curve P_x in quadrant (d) relating the price of good x to the wage rate in x and (through that) curve S, the supply curve of good x. It moves both these curves vertically upward by the amount of the tax to P_x* and S*, as shown in Figure 2.[19] The intersection of the shifted supply curve S* and the demand curve D shows that the tax increases the relative price of good x by OW and that the output of the taxed good falls by OM. Carrying the output effect to quadrant (b), we see that the tax induces a fractional capital outflow from the taxed industry of ON. The reallocation of capital results in a fall in the wage rate (given $dP_K = 0$) in the taxed industry

[18] See McLure [1971a].

[19] It is a simple exercise in the manipulation of the diagrams to show that the upward shift in curve P_x in quadrant (d) to P_x* shifts the supply curve by the same amount.

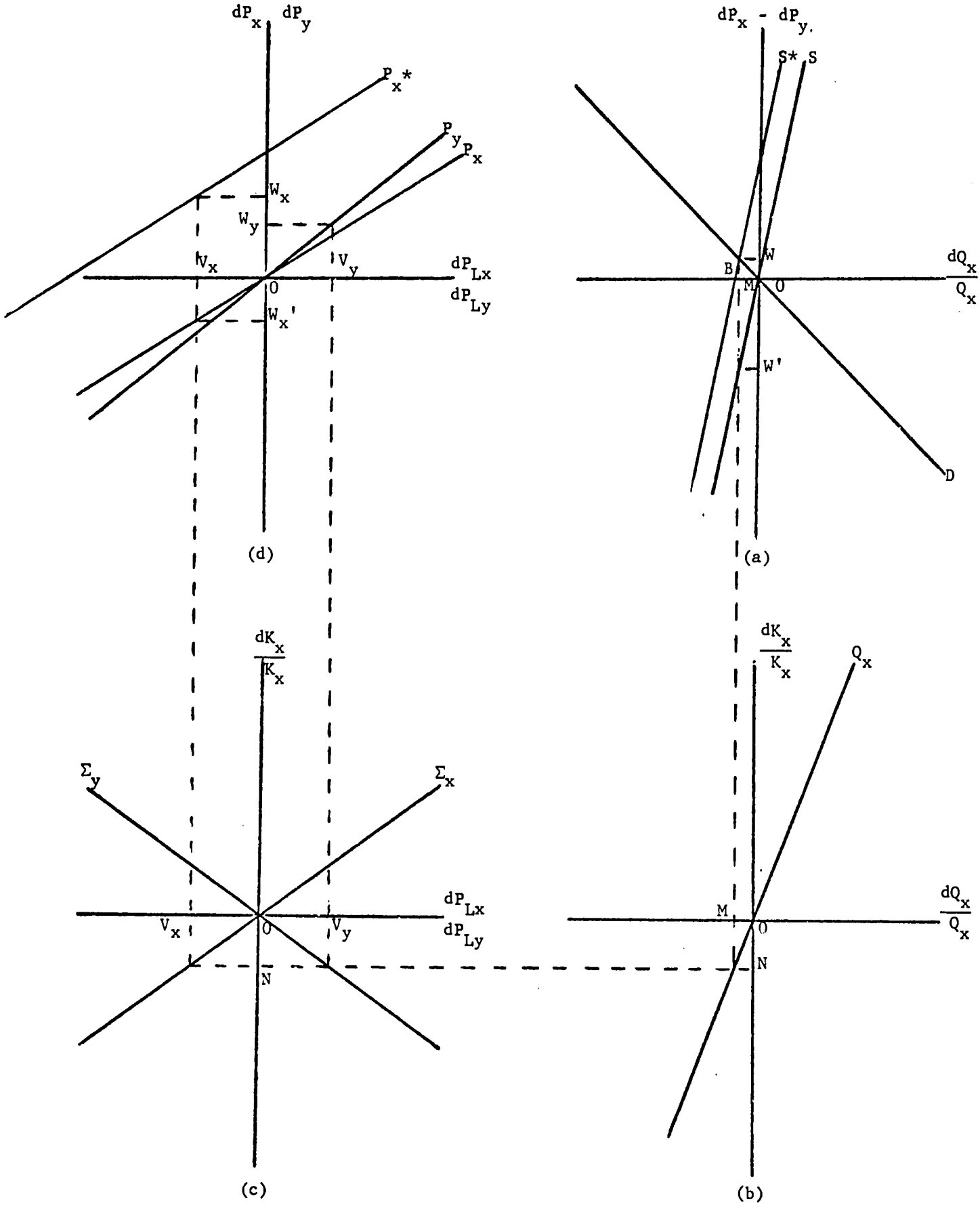

Figure 2: Analysis of Excise Tax on Good X

of OV_x and a rise in the wage rate in the untaxed industry of OV_y, as shown in quadrant (c). Finally, we can use these effects and the curves in quadrant (d), as before, to determine the effects on the prices of the two goods. The price of good x rises by OW_x and that of good y rises by OW_y, the difference W_yW_x being the change in relative product prices and equal to OW in quadrant (a).

Total payments to factors in industry x fall in nominal terms by OW_x'. By construction $W_x'W_y$ in quadrant (d) equals OW' in quadrant (a), the amount by which the price of good x, net of tax, falls relative to the price of good y.

As in the case of our examination of expenditure incidence we can use some simple algebra to elaborate on these results. First, the supply curve in this case can be written as:

$$dQ_x/Q_x = S(dP_x - dT_x - dP_y), \tag{7a}$$

since firms react to prices net of tax. Combining this equation with equation (1) above, we have:

$$dP_x - dP_y = \frac{S}{E+S}\, dT_x \quad \text{and} \tag{10}$$

$$dQ_x/Q_x = \frac{-ES}{E+S}\, dT_x. \tag{10a}$$

As is well known from partial equilibrium analysis, the increase in the relative price of the taxed good induced by excise taxation depends positively upon the elasticity of supply and negatively upon the elasticity of demand.[20] Changes in factor rewards can be calculated directly from these results by the use of

[20] Musgrave notes [1959, pp. 291-2] this result. But he seems to be incorrect when he suggests that it "applies to a strictly partial equilibrium setting only." The present analysis takes explicit account of shifts of resources between industries, though not of excess burdens.

It is worth noting at this point that the expressions in equations (10) and (10a) are each one degree higher in E and S than are those in equations (9) and (9a). Because of the non-uniform wedge driven between costs and prices by excise taxes that is not present when government procurement simply shifts the demand curve, more substitution in production and consumption is involved in adjusting to excises than to expenditure shifts. This is noted as well in McLure [1972a].

equations (2) - (4), and those in product prices by also using equations (5) and (6).

The next tax to be examined, a general consumption or income tax, is particularly easy to analyze. Such a tax can be thought of as an ad valorem tax levied at the same rate on both goods x and y. Thus it raises both curve P_x and curve P_y in quadrant (d) by the amount of the tax. But because both these curves rise by the same amount, it has no effect on the supply curve for industry x. Thus the tax has no effect on relative product prices, the interindustry allocation of capital, or the relative rewards to factors. It does, however, given the numeraire equation $dP_K = 0$, raise the absolute prices of both goods x and y by the amount of the tax. Thus it is simply borne in proportion to initial shares in national income (or consumption).

The analysis of a tax levied on capital in only industry x is more complicated than those presented thus far. First, the tax shifts curve Σ_x in quadrant (c) to the right by the amount of the tax (to Σ_x* in Figure 3), as can be seen from equations (3) and (3a). In addition, it raises curve P_x in quadrant (d) by f_K times the amount of the tax, as shown by equations (5) and (3a) to P_x*. To determine the effect of the tax on the supply curve, we can choose an arbitrary point N on the vertical axis of quadrant (c) in Figure 3. In the absence of the tax, the capital outflow indicated by ON in quadrant (c) would result in a fall in the wage rate in industry x of OV_x and a fall in the price of good x of OW_x. But the effect of the tax is to limit the fall in the wage rate in industry x resulting from this capital outflow to OV_x'. (Recall the choice of $dP_K = 0$ as the numeraire equation.)

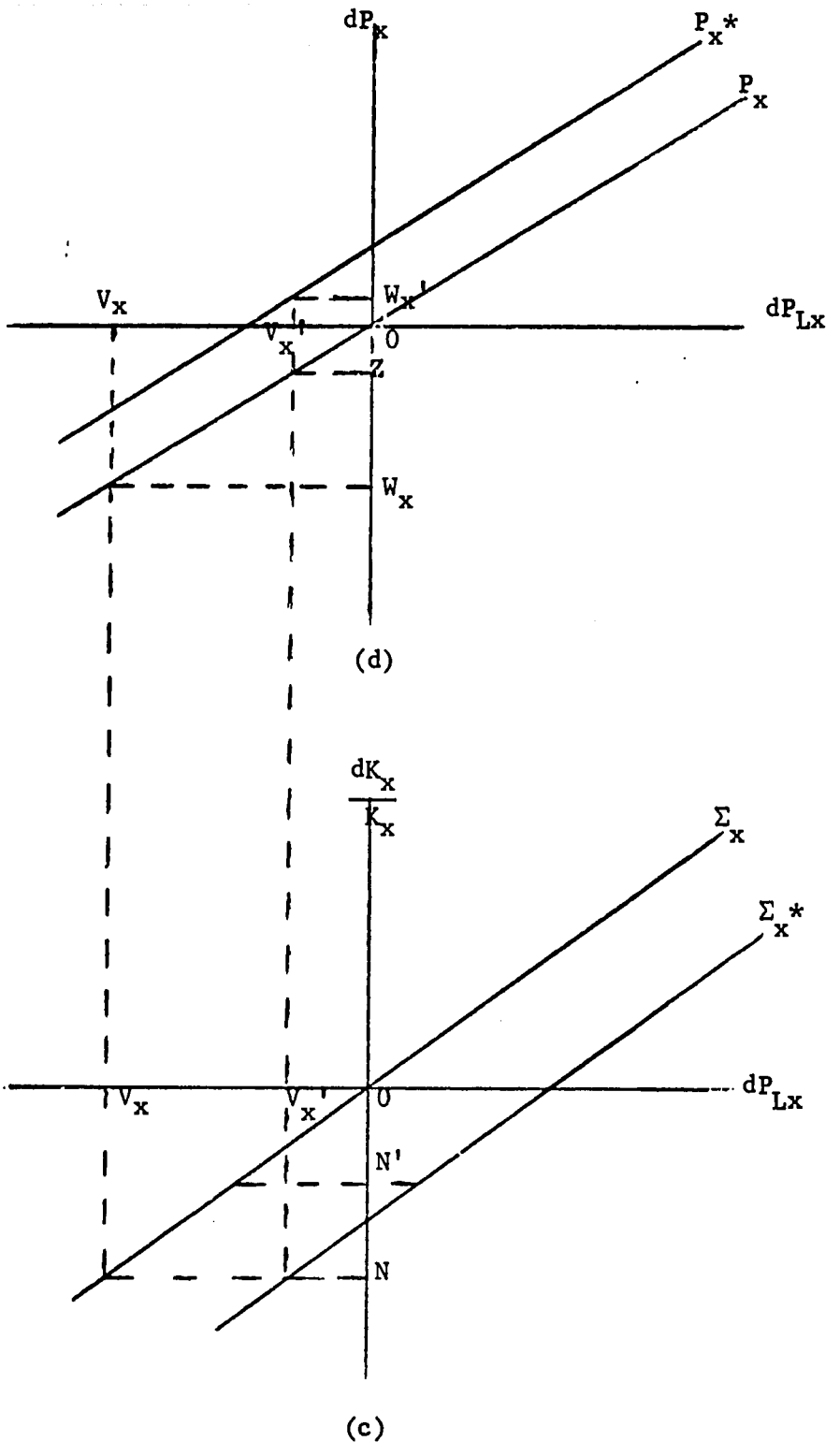

Figure 3: Analysis of Tax on Capital in Industry X

The impact of the postulated capital flow on the price of x, given the tax, can be seen from quadrant (d) to be OW_x'. Thus the supply curve is shifted upward by the tax on capital used in x by the amount W_xW_x'. But this shift can readily be seen to be exactly equal to the ad valorem rate of tax on capital used in industry x, as follows. First, W_xW_x' can be decomposed into two parts, W_xZ and ZW_x'. The first of these is simply equal to $f_L dT_{Kx}$. (The distance V_xV_x' equals dT_{Kx}, as noted above, and the slope of curve P_x is f_L.) The other is the distance between curves P_x and P_x*, noted above to be $f_K dT_{Kx}$. Thus the entire distance W_xW_x' equals the ad valorem rate of taxation of capital in industry x. This implies, of course, that this tax raises the supply curve of x by exactly as much an equal ad valorem excise tax on good x. This, in turn, implies that the tax on capital in industry x affects all variables in the model exactly as the excise tax does, with one exception. The exception is the wage rate in industry x.

The effect the tax has upon the wage rate in x is given in quadrant (c). Suppose that the tax on capital in x produces the outflow of capital from the industry of ON shown in Figure 3. In such a case the wage rate falls by OV_x'. But this result cannot be generalized. Suppose that production in industry x is characterized by a high elasticity of substitution, relative to the elasticity of product demand. In that case it is possible for the wage rate in that industry to rise relative to the return to capital. This case is shown in Figure 3 for the capital outflow ON'. The point is that the capital outflow reduces the output of good x and raises its price as well as reducing the marginal physical product of labor. If demand is sufficiently price inelastic and factor substitution in industry x sufficiently elastic, the former influence can outweigh the

latter. In that case the tax on capital in x will actually raise the wage rate in that industry, relative to the return on capital.[21]

The final two taxes to be considered are a tax on labor in industry x and a tax on capital in both industries. These taxes are considered together because both are borne by the owners of the taxed factors. The tax on labor in industry x shifts two curves: Σ_x in quadrant (c) and P_x in quadrant (d). But because both these curves shift to the left by the amount of the tax, the supply curve in quadrant (a) is unaffected. Thus the tax has no effect on relative product prices or the allocation of capital between industries. Nor does it affect the relative returns to capital and to labor in the untaxed industry. Its only effect is to reduce the net wage rate in the taxed industry by the amount of the tax. Thus labor specific to one industry bears the full burden of any tax levied on it. Since the wage rate gross of tax in industry x and the wage rate in industry y are both unchanged, the absolute price of neither good changes.[22]

The previous result was the standard Ricardian result that a tax on an immobile factor is borne by that factor. A similar, but less widely recognized, result occurs if a tax is imposed on all uses of the mobile factor, capital.[23]

---

[21] If the numeraire $dP_y = 0$ is chosen, the sign of dP_{Lx} depends simply upon $(S_x - E)$; see McLure [1971a].

[22] From this it is easy to see why the tax on capital in x and the excise on x have the same effects, except on the wage rate, if levied at the same ad valorem rate. The excise is equivalent to an ad valorem tax on both factors in x. But the ad valorem tax on labor in x affects only the net wage rate in that industry. In terms of the diagrams, the tax on capital in x shifts Σ_x to the right, but the one on labor in x shifts it to the left by an equal amount, leaving the curve unchanged. The two taxes together raise curve P_x by dT, the amount of the ad valorem tax. But so does the excise on good x.

[23] There is no need to examine explicitly the incidence of a tax on labor in both industries. Such a tax can be broken down conceptually into two taxes--one on labor in industry x and one on labor in industry y. Since each of the parts would be borne by the taxed labor, the entire tax is borne by labor.

Such a tax shifts curves Σ_x and Σ_y in quadrant (c) to the right by the amount of the tax and it raises curves P_x and P_y by $f_K dT_K$ and $g_K dT_K$, respectively. But it has no effect on the supply curve for good x.[24] Thus relative product prices and the inter-industry allocation of capital are unaffected. But the wage rates in the two industries and the prices of the two goods rise by the amount of the tax.[25] In real terms this implies that owners of capital bear the full burden of the universal tax on capital even though capital is mobile between industries.

5. Balanced Budget Incidence

Thus far we have considered the incidence of government expenditures financed in a distributionally neutral way (section 3) and the incidence of several taxes used to finance distributionally neutral expenditures (section 4). Now we consider briefly how the analysis of the last two sections can be combined to allow us to investigate the incidence of balanced budget increases in government expenditures in the general case in which neither expenditures nor their financing is distributionally neutral.

For practical purposes we need to examine only the effect of financing a non-neutral increase in public expenditures through a tax on good x. There is no need to examine the cases of financing through taxes on either the immobile factor or the mobile factor in all its uses. Since those taxes are simply borne by the taxed fac-

---

[24] Recall that a tax on capital in x shifts the supply curve upward by the ad valorem amount of the tax; the tax on capital in y offsets this shift. Another way to see that the supply curve is unaffected is to recall that a tax on capital in one industry has the same impact on the supply curve as an excise on that industry. But we have already shown that an excise on both industries does not affect the supply curve.

[25] In terms of Figure 4, the solution is OV in quadrant (c) and OW in quadrant (d). That OW equals dT_K can be shown by the same reasoning employed above in the discussion of Figure 3.

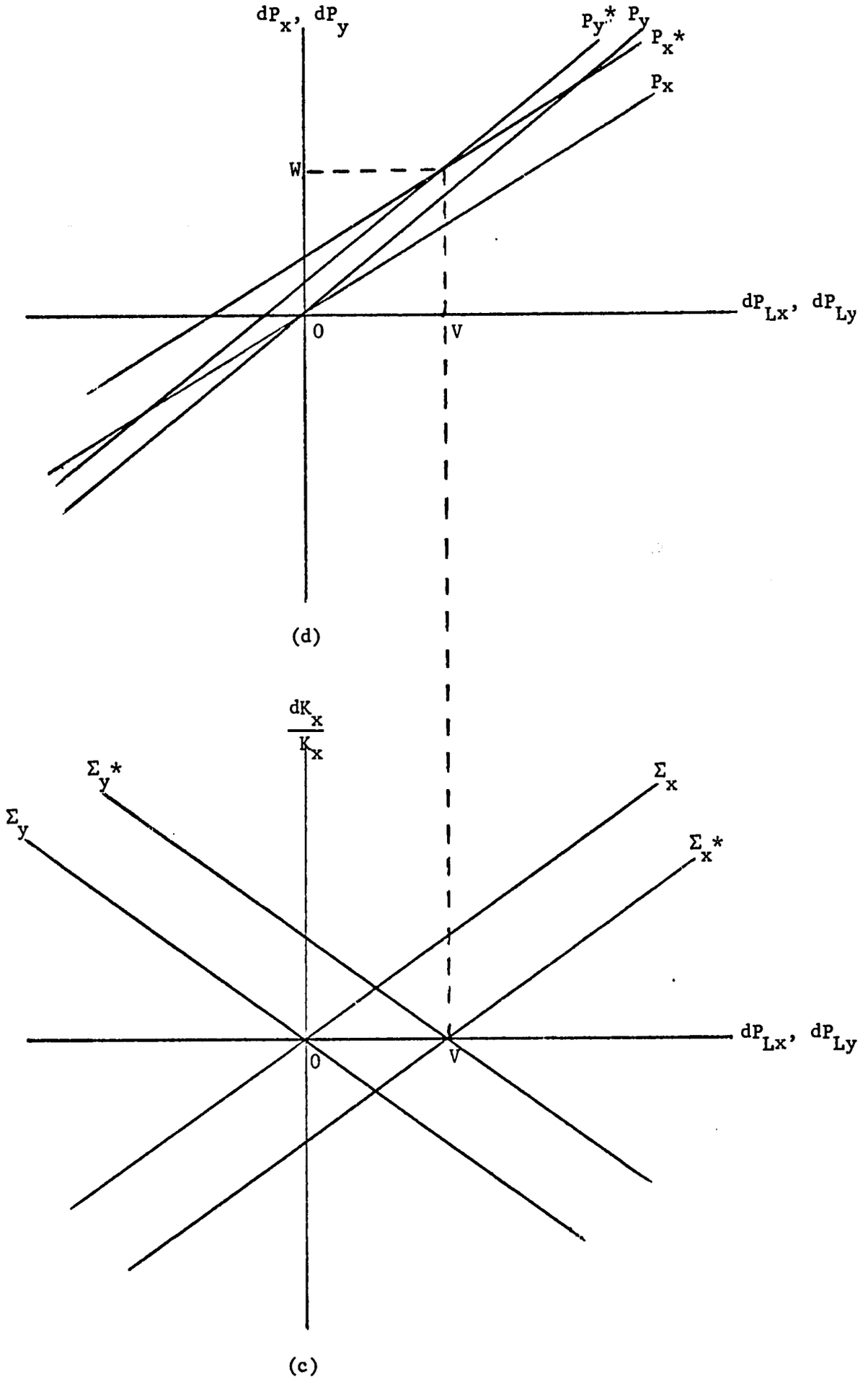

Figure 4: Analysis of Tax on Capital Income

tors, they can readily be combined with non-neutral expenditure patterns. And since the tax on good x and the tax on capital in x have different results only for the wage rate in x, there is no need to consider the case of balanced budget financing through a tax on capital in x. Finally, we can limit ourselves to quadrant (a), since all that is of real analytical interest occurs there. Of course to obtain the full solution for all the variables in the model, it would be necessary to carry the results from quadrant (a) into the remaining quadrants, as we have done in earlier sections.[26]

The diagrammatic analysis is given in Figure 5, which combines aspects of quadrant (a) in Figures 1 and 2. The demand curve shifts from D to D_E because of the public expenditure policy and the supply curve shifts from S to S* because of the tax on good x. The new equilibrium is determined by the intersection of the two shifted curves, D_E and S*. In this particular case the price of good x would rise relative to that of good y by OW and output of good x would rise by the fraction OM. Of course, if the shift in aggregate demand toward good x were less than shown by curve D_E, the price rise would be less than shown, and if the demand shift were small enough, output of good x would fall, rather than rise. Such a case is shown by curve D_e. Finally, if demand shifts away from good x, as it does in the case of curve D_e*, the relative price of good x would rise less than if the tax financed a neutral expenditure program, and it might even fall.

We can use equations (1a) and (7a) to solve explicitly for the changes in relative prices induced by balanced-budget expenditures.[27] Alternatively (and equivalently),

---

[26] Curve P_x in quadrant (d) is the only curve in quadrants (b)-(d) that is affected by the balanced-budget program financed by a tax on good x. It rises by the amount of the tax, as demonstrated in section 4. Similarly, for each of the taxes not explicitly considered in this section, the shifts of curves in quadrants (b)-(d) are exactly those described in section 4. In each case the demand curve shifts as described in section 3.

[27] The results reported in this section are consistent with those in McLure [1972a].

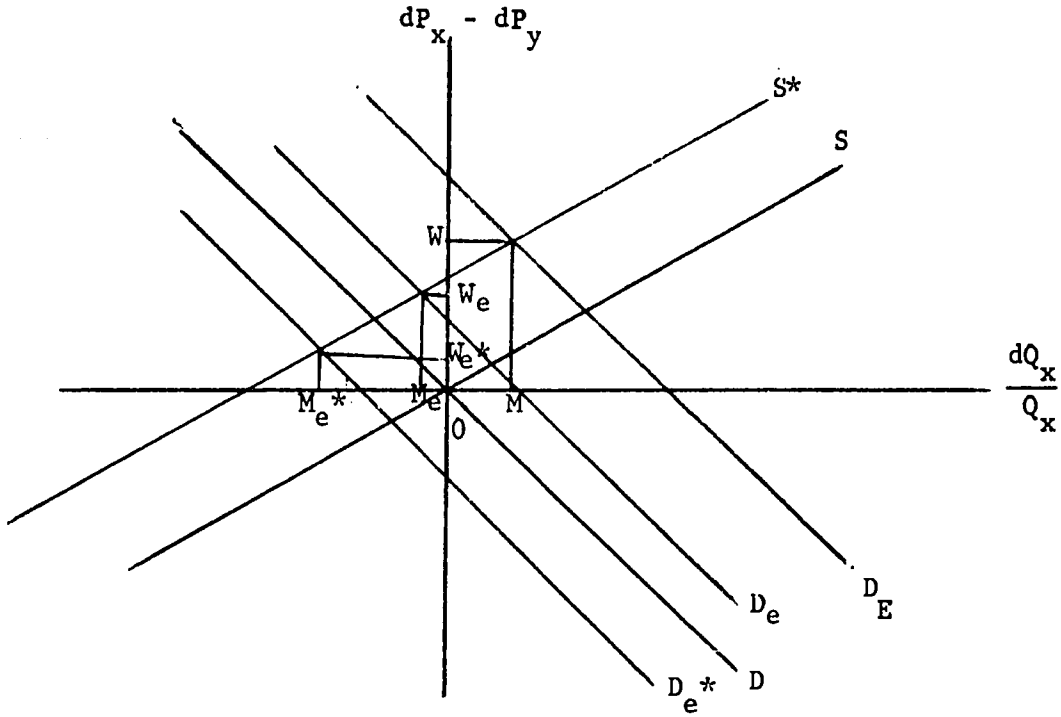

Figure 5

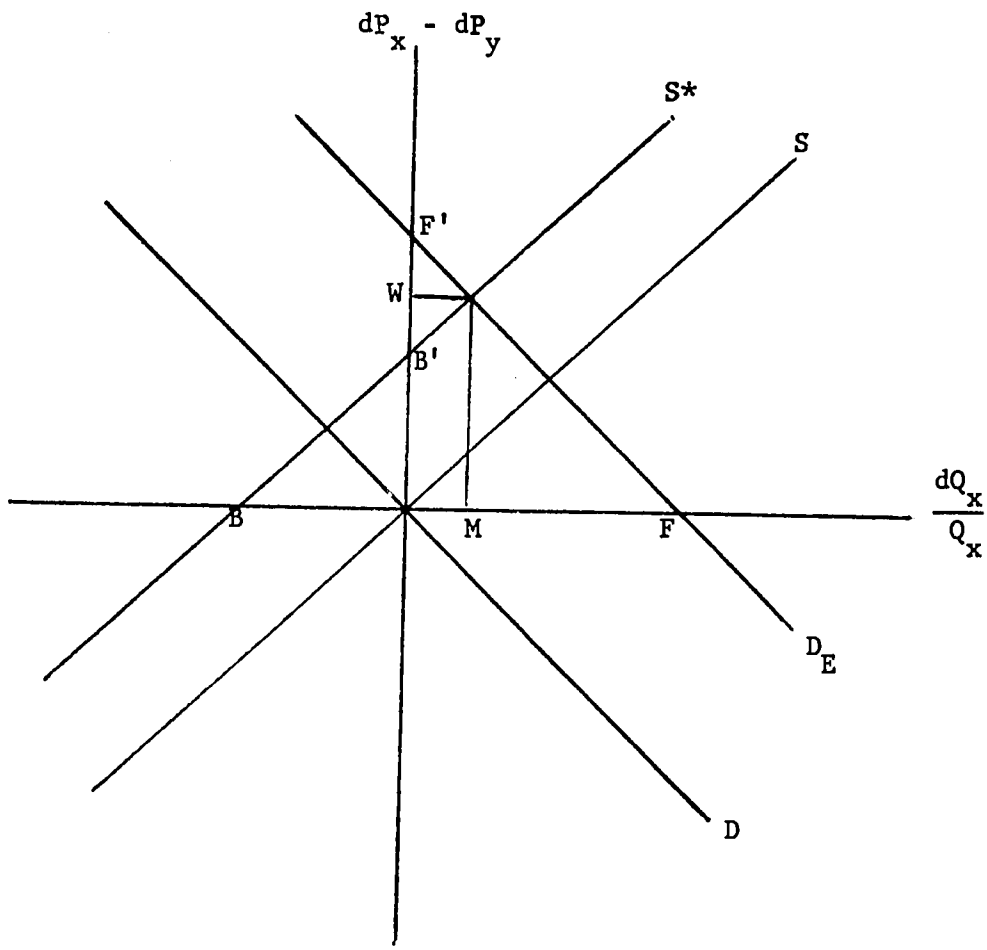

Figure 6

we can simply combine the results given in equations (9) and (9a) and equations (10) and (10a). In either event, we reformulate the fractional shift in demand for good x resulting from the increase in government expenditures as follows:

$$dQ_G/Q_x = (m_g - m_p)dG/Q_x, \tag{11}$$

where dG is the balanced-budget increase in spending, and m_g and m_p are the public and private marginal propensities to spend on good x. (See also footnote 13 above.) Moreover, we note that because of the assumption of a balanced budget the following holds:

$$dG = Q_x dT_x \ . \tag{11a}$$

Using these relations gives us the following solution for the balanced budget increase in spending under consideration:

$$dP_x - dP_y = (S + m_g - m_p)dT_x/(S + E), \text{ and} \tag{12}$$

$$dQ_x/Q_x = -S[E - (m_g - m_p)]dT_x/(S + E). \tag{12a}$$

Of course, if $m_g = m_p$, these results reduce to equations (10) and (10a), as they must.

The diagrams developed in earlier sections can be employed to demonstrate these results. Let us begin with separate demonstrations of the results for expenditure and tax incidence. First, note that OM in Figure 1 equals OW•S and MF equals OW•E. But OM + MF = OF. Thus, OF = OW•(S + E), and OW = OF/(S + E). But because OW is simply $dP_x - dP_y$ and OF is dQ_G/Q_x or $(m_g - m_p)dG/Q_x$, this yields the result reported in equation (9). Similarly, OM = S•OF/(S + E), as reported in equation (9a) in slightly different terminology.

By the same reasoning we can easily derive the results of equations (10) and (10a) from Figure 2. OB = OM + MB, which in turn equals -(E + S)OW. But OB also equals $-SdT_x$. Thus OW = $SdT_x/(E + S)$, as stated in section 4. Finally, OM = $-ESdT_x/(E + S)$, as reported in equation (10a).

Dealing with a balanced budget change is only slightly more complicated. In Figure 6 MB = -S•OW and MF equals E•OW. Thus BF = OW•(E + S). But by the reasoning of the previous three paragraphs, BF also equals $(S + m_g - m_p)dT_x$. From this we can see that $OW = (S + m_g - m_p)dT_x/(E + S)$, as stated in equation 12. Finally, to solve for OM, the fractional change in the output of good x, we need only note that B'W = OM/S and WF' = OM/E, so that B'F' = OM(E + S)/ES and OM = B'F'•ES/(E+S). But we can rewrite B'F' as $(m_g - m_p)dG/Q_x \cdot E - dT_x$. Thus OM equals $S(m_g - m_p - E)dT_x/(E+S)$, as noted in equation (12a).

Inspection of Figure 6 reveals that the price of good x can rise by more than the tax per unit of good x only if demand shifts toward good x enough that output of that good rises on balance. Equation (12a) shows that this result can occur only if $(m_g - m_p)$ exceeds E. Of course, equation (12) gives this result directly. Finally, we can see that the price of good x can fall relative to that of good y even if a tax on good x is employed to finance a balanced budget increase in public spending if supply is relatively inelastic and demand shifts strongly toward good y. In particular, $dP_x - dP_y$ has the sign of $S + m_g - m_p$, which is negative for relatively small values of S and m_g and large values of m_p.

6. Discrete vs. Small Changes

Strictly speaking, the Harberger model is applicable only to the analysis of inifinitesimally small taxes and expenditures, as it is written in terms of differentials. Yet the model is commonly utilized as the basis for policy decisions involving tax changes that are far from small. Moreover, it has been employed in empirical analyses of the incidence and excess burden of the corporation income tax.[28] The appropriateness of the model for such uses has been the subject of in-

[28] See Harberger [1962] and [1966].

creasing skepticism.[29] In this section we examine briefly the problems posed by using the Harberger analysis of differential changes to approximate the effects of discrete tax and expenditure changes. But the problems are only exposited. No attempt is made either to generalize the model to deal adequately with discrete changes, or to perform a sensitivity analysis of the inaccuracy resulting from using the Harberger model to deal with discrete changes. Those more demanding tasks are beyond the scope of this brief discussion.

In a nutshell, the problem is that to be fully consistent with the Harberger model all the curves in Figure 1-4 should be straight lines.[30] But it is virtually certain that for discrete changes in taxes or expenditures no more than two of the curves will in fact be straight lines. If such is the case, the Harberger model can be expected to yield quantitatively incorrect results.

Whether curves D and Σ_x should be straight lines does not concern us. If the income-compensated elasticity of product demand with respect to relative product prices is not constant, then D should not have a constant slope. And if the elasticity of factor substitution is not constant, then Σ_x will not be a straight line. But these are empirical questions that, while important, are not central to the discussion of this section. Rather, the crucial questions are whether curves Q_x, Σ_y, P_x, P_y, and S are straight lines. These questions can be answered on analytical grounds.

The slope of curve Q_x in quadrant (b) is the inverse of the elasticity of output of good x with respect to inputs of capital. In general, this elasticity is not constant for increasing doses of capital applied to a constant amount of labor. Only if the elasticity of factor substitution is unity is the output elasticity constant. If (and only if) the elasticity of factor substitution is less than unity, as seems

---

[29] See Krauss [1972].

[30] Each of equations (1)-(6) describes a straight line. One problem not considered in the text is that in the discrete case the demand curve is likely to shift. For differentially small tax policies it is reasonable to assume for analytical convenience that marginal propensities to consume good x are equal for all economic agents. But for discrete changes this assumption becomes untenable even as an analytical device. In the extreme case marginal propensities are equal to average propensities. But if average propensities are equal there is no distribution on the uses side. Rather than make the extreme assumption that there is no effect on the uses side, let us simply note that redistribution of discrete size is likely to shift the demand curve, but in an undetermined way.

likely, the output elasticity falls as more and more capital flows into industry x. Thus curve Q_x should increase in slope as capital flows into industry x. (Moreover, the increase in the slope is greater, the smaller is the elasticity of factor substitution.) In qualitative terms, the curve relating capital inflows to changes in output should look like Q_x*, rather than Q_x. (See Figure 7.)

Moving to quadrant (c), we see at once that curve Σ_y cannot have a constant slope. Since that slope is $\sigma_y K_y/K_x$, it falls in absolute value as capital flows into industry x, even if we assume that σ_y is a constant. Of course, if K_y/K_x is initially quite large, curve Σ_y is virtually vertical, and its slope is not much affected by even proportionally large inflows of capital into industry x (i.e., by large values of dK_x/K_x). But if K_y/K_x is initially small, Σ_y will be relatively flat, and even small values of dK_x/K_x will flatten it further by an appreciable amount.[31] In qualitative terms, we can expect the appropriate curve to resemble Σ_y* in Figure 7, instead of the linear form Σ_y.

Finally, curves P_x and P_y in quadrant (b) have slopes equal to the initial shares of labor in the two industries. By the same reasoning that prevailed in quadrant (b), we know that these slopes are constant only if the elasticity of factor substitution is unity. But if factor substitution is less than unitary elastic, labor's share in either industry will increase with its price, and in qualitative terms the curves will look like P_x* and P_y*, rather than P_x and P_y, in Figure 7.

Turning now to quadrant (d) we can see that the supply curve is likely to bend upward to the right. This can be seen from an inspection of either the other three quadrants of Figure 7 or equation (8).

If both elasticities of factor substitution are less than one, an increase in output of good x is accompanied by a fall in f_K and a rise in f_L, a rise in

[31] For example, if K_y/K_x were initially 1/2, a capital flow of $dK_x/K_x = 1/2$ would result in a value of K_y/K_x of 0 and a horizontal Σ_y curve.

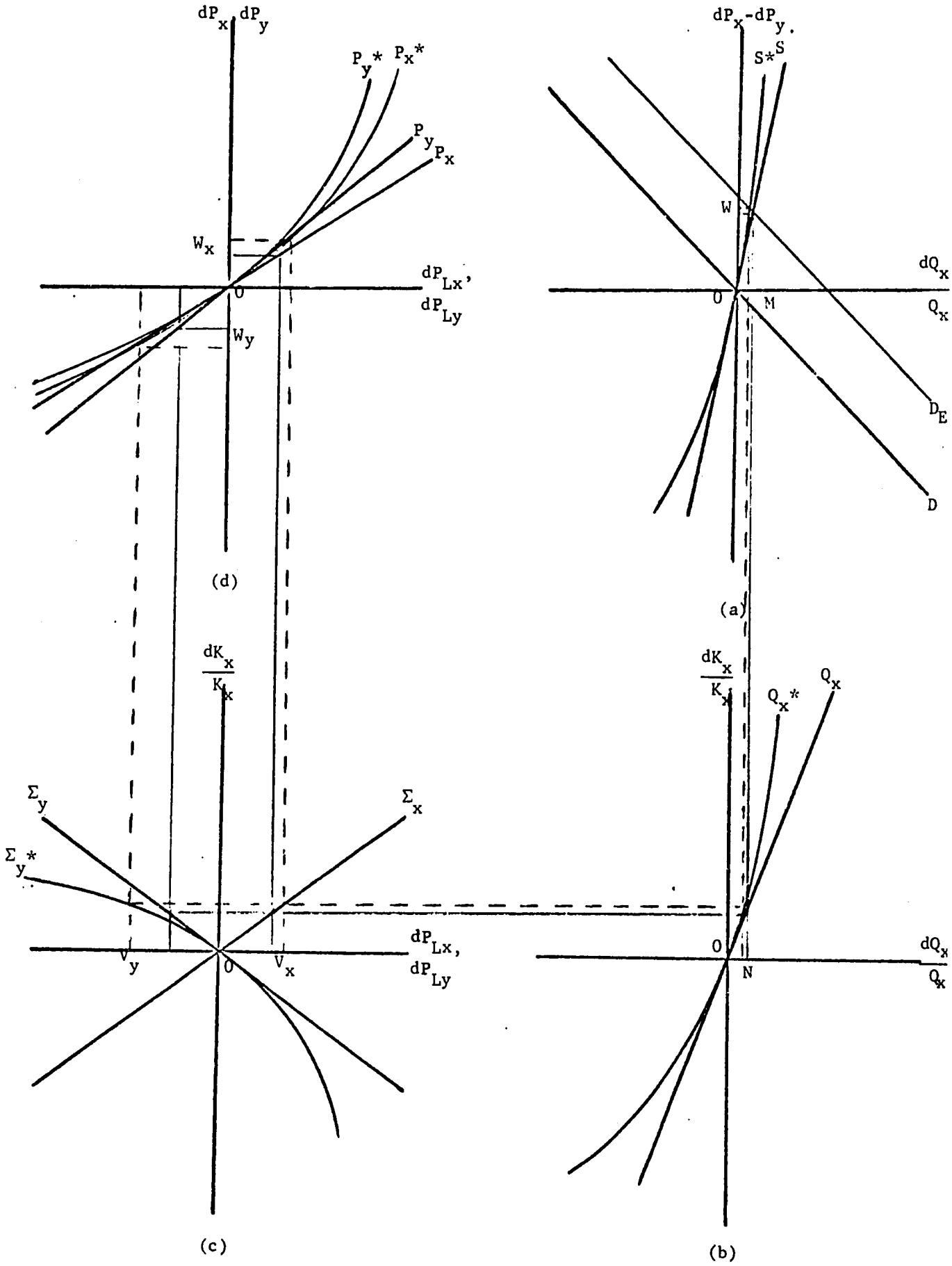

Figure 7: Analysis of Expenditure Incidence under Linear and Non-Linear Versions of the Harberger Model

K_x/K_y, and a fall in g_L.[32] Only the fall in g_L tends to swing the supply curve S (derived from the unstarred or straight line curves in quadrants (b) - (d)) downward. All the other changes tend to swing it upward. The likelihood that the latter influence will dominate is seen from examination of equation (8). The denominator of the expression for the supply curve consists of $f_L\sigma_y + g_L\sigma_x K_x/K_y$. Taking first the right hand portion of this denominator, we see that it contains two elements, g_L and K_x/K_y, that move in opposite directions. If K_x/K_y is initially small, $\sigma_y \Delta f_L$ is likely to outweigh $(\sigma_x K_x/K_y)\Delta g_L$. But if K_x/K_y is initially large, the change in K_x/K_y is likely to outweigh the change in g_L.[33] From this it seems reasonable to conclude that in general supply becomes less elastic as we move from the origin to the right in quadrant (a) of Figure 7, and more elastic as we move to the left.[34]

The importance of this qualification can be seen by considering the expenditure policy indicated by the shift of the demand curve from D to D* in Figure 7. The linear version of the model gives the results indicated by the solid line connecting points corresponding to OM and OW, ON, OV_x and OV_y, and OW_x and OW_y, reading around the diagram in a clockwise direction from quadrant (a). The curvilinear model, on the other hand, gives the results indicated in the same notation, but corresponding to the points connected by a broken line.[35] Comparing the two results

---

[32] If both these elasticities are greater than one, most of what is said in this section is reversed. If only the elasticity of substitution in industry y exceeds unity, supply is certain to be less elastic than in the linear version. If the elasticity exceeds unity only in industry x, supply is likely to be more elastic.

[33] Writing the change in the denominator of equation (8) explicitly may clarify the issue: $\sigma_y \Delta f_L + \sigma_x[g_L \Delta(K_x/K_y) + (K_x/K_y)\Delta g_L]$.

[34] It may be worth noting that whereas P_x/P_y can increase without bound, it is bounded on the bottom by $P_x/P_y = 0$.

[35] Since the primary interest here is in qualitative results, no effort has been made to draw curve S* to correspond exactly to curves Q_x*, Σ_y*, Σ_x, P_x*, and P_y*. Unfortunately, even fairly casual treatment of this subject tends to

we find that the linear model understates the change in relative product prices and overstates the quantity adjustment induced by the expenditure policy. Similarly, it understates the movement in relative factor rewards.[36] But quantitative estimates of the extent to which linearization in the Harberger model causes results to be inaccurately stated is beyond the scope of this paper.

In a similar vein, we could introduce an excise tax into the system to see how the linearization might lead us astray. But again, doing so would lead us further into the quantitative evaluation of errors resulting from linearization than we should go after a paper has reached this length. Suffice it to say that under certain circumstances the errors can be substantial and that users of the linear version of the Harberger model should keep this caveat in mind in offering policy advice and in making empirical estimates on the basis of the linear model.

7. Conclusion

This paper has had three goals. Most basically, it provides a diagrammatic exposition of one of the important cases of tax and expenditure incidence that can be analyzed using the Harberger model. The diagrammatic exposition makes clear how the various equations in the Harberger model combine to generate a supply curve with respect to relative product prices. Explanation of the derivation of this supply curve from the underlying curves describing production is the second purpose of the paper. The final purpose has been to demonstrate how the use of the Harberger model, which is written in terms of differentials, can lead one

---

plunge us directly into the sensitivity analysis that is beyond the scope of this paper.

[36] Of course we have the familiar index number problems here. The results reported here would be reversed if the slopes derived from the post-tax, rather than the pre-tax, equilibrium were employed in the comparison. A similar point is noted in Mieszkowski [1969].

astray in the analysis of tax and expenditure changes that are not small. But no attempt has been made either to provide a model that adequately handles discrete changes in the tax and expenditure variables or to quantify the inaccuracy of using the Harberger model in situations where the assumption of small changes is not met.

References

Harberger, Arnold C. "The Incidence of the Corporation Income Tax," Journal of Political Economy, June 1962, pp. 215-40.

Harberger, Arnold C. "Efficiency Effects of Taxes on Income from Capital," in Marian Krzyzaniak, editor, Effects of Corporation Income Tax, Wayne State University Press, Detroit, 1966, pp. 107-17.

Krauss, Melvyn. "Differential Tax Incidence: Large versus Small Tax Changes," Journal of Political Economy, January-February 1972, pp. 193-97.

McLure, Charles E., Jr., "Interregional Incidence of General Regional Taxes," Public Finance, 1969, pp. 457-83.

McLure, Charles E., Jr., "Taxation, Substitution, and Industrial Location," Journal of Political Economy, January-February 1970, pp. 112-32.

McLure, Charles E., Jr., "Tax Incidence, Macroeconomic Policy, and Absolute Prices," Quarterly Journal of Economics, May 1970, pp. 254-67.

McLure, Charles E., Jr., "The Theory of Tax Incidence with Imperfect Factor Mobility," Finanzarchiv, 1971, pp. 27-48.

McLure, Charles E., Jr., "The Design of Regional Tax Incentives for Colombia," in Malcolm Gillis, editor, Fiscal Reform for Colombia, Harvard Law School, Cambridge, Massachusetts, 1971, pp. 545-56.

McLure, Charles E., Jr., "The Theory of Expenditure Incidence," Finanzarchiv, 1972, pp. 432-53.

McLure, Charles E., Jr., "General Equilibrium Incidence Analysis: The Harberger Model after Ten Years," xerox, 1972.

Mieszkowski, Peter M., "Tax Incidence Theory: The Effects of Taxes on the Distribution of Income," Journal of Economic Literature, December 1969, pp. 1103-24.

Musgrave, Richard A., The Theory of Public Finance, McGraw-Hill Book Co., New York, 1959.

PROGRAM OF DEVELOPMENT STUDIES

Discussion Papers

No. 13 "Transformation of Polish Agriculture from 1920: A Historical Perspective" (1971). . . . . Marian Krzyzaniak

No. 14 "The Incidence of Taxation in Colombia" (1971). . .Charles E. McLure, Jr.

No. 15 "The Effect of Changes in the Distribution of Income on Labor, Foreign Investment and Growth in Brazil" (1971) Samuel A. Morley and Gordon Smith

No. 16 "Korean Rice, Taiwan Rice, and Japanese Agricultural Stagnation: An Economic Consequence of Colonialism--A Comment" (1971). . .Yhi-Min Ho

No. 17 "The Incidence of Taxation in West Malaysia" (1971)Charles E. McLure, Jr.

No. 18 "Vocational Improvement Centres: A Successful Nigerian Experiment" (1972). . . . . Gaston V. Rimlinger and Carolyn Stremlau

No. 19 "Government Expenditures, the Revenue Constraint and Wagner's Law: The Case of Turkey" (1972) . . . . . Marian Krzyzaniak

No. 20 "The Long-Run Incidence of Government Spending on Education" (Rev. No. 10) (1972) . . . . . .Marian Krzyzaniak and Ibrahim Eris

No. 21 "On Solow's Method of Estimating the Residual" (1972) . . . . . .Yhi-Min Ho and Clive Bell

No. 22 "Models of Development Including Income Distribution" (1972) . . . . . .James W. Land and Ronald Soligo

No. 23 "Disguised Unemployment in a Subsistence Economy" (1972) . . . . . Jose Hamilton Gondim Silva

No. 24 "A Proposal for Research on 'Distribution of Gains, Wealth and Income from Economic and Political Development'" (1972). . . . . .James W. Land

No. 25 "Optimal Wage and Education Policies with International Migration" (1972) . . . . . .R. Albert Berry and Ronald Soligo

No. 26 "Marketing and Economic Development: A Brazilian Case Study, 1930-70" (1972) . . . . . Gordon W. Smith

No. 27 "Indigenisation of Industry and Progress of the Second Nigerian National Development Plan" (1972). . . . . .Gaston V. Rimlinger

No. 28 "The Distribution of Incomes and the Short-Run Burden of Taxes in Turkey, 1968" (1972). . . . . Marian Krzyzaniak and Süleyman Özmucur

No. 29 "The Proper Use of Indirect Taxation in Latin America: The Practice of Economic Marksmanship" (1972). . . . . .Charles E. McLure, Jr.

No. 30 "Distributional Equity, Inflation, and Efficiency in the Brazilian Fluctuating Exchange Rate System" (1972). . . . . Donald L. Huddle

No. 31 "A Diagrammatic Exposition of General Equilibrium Tax and Expenditure Incidence Analysis with One Immobile Factor". . . .Charles E. McLure, Jr.

Note: Discussion Papers are available upon request to individual scholars and researchers and libraries of educational institutions.