PN-ABI-014
7166 2

Report No. 91-09

A Report of

USAID/San Jose

and

Office of Energy
Bureau for Science and Technology
United States Agency for International Development

EXPORT POWER OPTIONS FOR FIVE SUGAR MILLS IN COSTA RICA

Prepared by:

Winrock International
Institute for Agricultural Development
1611 North Kent Street, Suite 600
Arlington, Virginia 22209 USA

Biomass Energy Systems and Technology Project, 936-5737
DHR-5737-A-OO-9058-00

May 1991

ACKNOWLEDGEMENTS

This report was prepared by a team of specialists from Winrock International under the Biomass Energy Systems and Technology Project of the U.S. Agency for International Development. The team included William Kenda (consultant) and Dr. Marcia M. Gowen. Assistance in editing and final report preparation was provided by Allison Keeler. The team wishes to acknowledge the important contributions and assistance to the report from the Liga Agricola Industrial de la Caña de Azucar, USAID San Jose Mission, and A.I.D. Office of Energy. Extremely helpful comments from Ing. Mario Hildalgo, General Manager, at the Instituto Costarricense de Electricidad (ICE) and the mill owners provided additional useful input to the development of the report. Hospitality and cooperation from the mill managers and operators at Central Azucarera Tempisque, SA, El Viejo, Taboga, El Palmar, and Juan Viñas made this study possible. Specific individuals that worked with the team to which we extend special thanks include Ing. Heriberto Rodriguez, Ing. Juan Jose Flores, Ing. Jaime Gomez, and Ing. Javier Kopper.

TABLE OF CONTENTS

PAGE

Executive Summary 13

Chapter 1 Sugarcane Industry Power Cogeneration

Bagasse Needs, Steam Economy and Power Cogeneration 15
Efficient Steam Production and Usage 16
Summary 17

Chapter 2 CATSA

Existing Equipment Observations 19
Factory Steam and Power Plant Characteristics 19
Export Power Options 23
Option 1 - Minimum Investment, Minimum Export Power 23
Option 2 - Install Equipment of Option 1 plus a 2000 kW Condensing Turbogenerator 27
Option 3 - Options 1 and 2 plus Evaporator Changes 30
Option Recommendations: Advantages/Disadvantages 32

Chapter 3 EL VIEJO

Existing Equipment Observations 34
Planned Steam and Power System 34
Export Power Trials - May 1989 37
Power Options 38
Option 1 - Sugar Factory Efficiency Improvement of Juice Heater 38
Additional Options 43
Option Recommendations: Advantages/Disadvantages 44

Chapter 4 TABOGA

Existing Equipment Observations 46
Export Power Options 48
Option 1 - Planned Minimum Investment: A 5000 kW Turbogenerator 48
Option 2 - Additional Power Options for Maximum Export Power Using Three Boilers 51
Option Recommendations: Advantages/Disadvantages 54

Chapter 5 EL PALMAR

Existing Equipment Observations 57
Export Power Option 59
Export Power Option 1 64
Miscellaneous Recommended Additions 68
Option Recommendations: Advantages/Disadvantages 69

Chapter 6 JUAN VIÑAS

Existing Equipment Observations 71
Option 1 - Existing Steam and Power System: Minimum Investment 73
Option 2 - Increased Export Power Option Using Different Boiler Pressures 75
Option 3 - Maximum Power Option without a Bagasse Dryer and New Boiler 77
Option Recommendation: Advantages/Disadvantages 79

APPENDICES 83

LIST OF APPENDICES

PAGE

Appendix A: Typical Steam Turbine Performance Curves 85

Appendix B: Sugarcane Factory and Power Plant Descriptions 91

Appendix C: Bagasse Feeder Comments 103

Appendix D: Steam Turbine Cost Data.....105

Appendix E: Stack or Flue Gas Duct Temperature Recorder.....119

Appendix F: Transformer Availability and Cost Data.....125

Appendix G: Planned Revisions in Cogeneration Power Program at El Palmar.....131

LIST OF TABLES

Tables **Page**

Table E.1 Summary of Performance and Capital Cost Data of the Various Options 14

Table 1.1 Approximate Heat Loss from Bare and Lagged Flat Surfaces 18

Table 1.2 Steam Loss by Steam Leakage 18

Table 2.1 Central Azucarera Tempisque SA Plant/Factory Data 21

Table 2.2 CATSA Steam and Power Demand and Export Potential 22

Table 2.3 Financial Analysis of Power Production Options for CATSA ... 24

Table 2.4 Impacts of Increased Cane Production on CATSA Option 2 Financial Returns 30

Table 2.5 Comparison of Surface Area Required for CATSA Option 3 31

Table 2.6 Impacts of Increased Cane Production on CATSA Option 3 Financial Returns 32

Table 3.1 El Viejo Plant/Factory Data 35

Table 3.2 Required Additional Square Feet Heating Surface 39

Table 3.3 Financial Analysis of Power Production Options for El Viejo ... 40

Table 4.1 Taboga Plant/Factory Data 47

Table 4.2 Financial Analysis of Power Production Options for Taboga 49

Table 4.3 Steam Demand and Export Power Potential for Taboga Option 1 50

Table 4.4 Equipment and Estimated Installed Costs for Option 2 52

Table 5.1 El Palmar Plant/Factory Data 58

Table 5.2 El Palmar Option 1 Equipment Specifications 60

Table 5.3 El Palmar Export Power 61

Table 5.4 Financial Analysis of Power Production for El Palmar 67

Table 6.1 Juan Viñas Plant/Factory 72

Table 6.2 Financial Analysis of Power Production Options for Juan Viñas 74

Table 6.3 Power Output for Variations on Option 2 76

LIST OF FIGURES

Figure		Page
Figure 2.1	CATSA Steam and Power Diagram for Grinding Hours Using Modified Evaporator and Juice Heating System for 175 TCH	25
Figure 3.1	El Viejo, Present Configuration	36
Figure 3.2	El Viejo, Proposed Steam and Power Diagram for Grinding Hours for 150 TCH	41
Figure 3.3	El Viejo, Proposed Quadruple Effect for Economical Use of Steam	42
Figure 4.1	Taboga, Steam and Power System Proposed Quintuple Effect Evaporators	55
Figure 4.2	Taboga, Steam and Power Production for Maximum Power Export Using 3750 kW Condensing Turbogenerator and Quintuple Effect Evaporator Set - 180 TCH	56
Figure 5.1	El Palmar, Potential Steam and Power Production	62
Figure 5.2	El Palmar, Export Power with New 1500 kW High Pressure Condensing Turbogenerator and Evaporator Juice Heating - Vacuum Pan and Vapor Usage System	63
Figure 6.1	Juan Viñas, New Evaporator - Juice Heating - Vacuum Pan Arrangement and Steam Flow	81

ACRONYMS

A.I.D.	U.S. Agency for International Development
BFW	Boiler Feed Water
BPTG	Back Pressure Turbogenerator
CATSA	Central Azucarera Tempisque South America
Cl Jc	Clarified Juice
CJ	Cane Juice
CO_2	Carbon Dioxide
DSH	Desuperheater
FMR	Fiber Milling Rate of the Milling Plan (Tonnes of cane fiber milled per hour divided by total top roll surface of the milling plant which is divided by a constant of 100)
FD Fan	Forced Draft Fan for Boiler
ICE	Instituto Costarricense de Electricidad
IDB	Inter-American Development Bank
ID FAN	Induced Draft Fan for Boiler
IRR	Internal Rate of Return
LAICA	Liga Agricola Industrial de la Caña de Azucar
MJ	Mixed Juice
NPSH	Net Positive Suction Head for Pumps
NPV	Net Present Value
PRV	Pressure Reducing Valve
Pty	Purity
TG	Turbogenerator
zafra	Central American term for cane crushing season

UNITS AND MEASURES

BTU	British Thermal Unit
Bx	Brix - The percentage by weight of the solids in a pure sucrose solution.
FTT	Degree Fahrenheit Total Temperature (This includes saturation plus superheat temperatures)
Hg Abs	Inches of Mercury Absolute
HHV	High Heat Value (in British Thermal Unit per pound of bagasse at a given bagasse pol, moisture and ash content)
hp	Horse power
hph	Horse power hour
KVA	Kilovolt Amperes
kW	Kilowatt
kWh	Kilowatt hour
lbs	Pounds
MT	Metric Tons (Tonnes)
TCH	Tonnes Cane per Hour
TS	Tonnes of Sugar
Pol	The value determined by direct or single polarization of the normal weight solution in a saccharimeter.
PSIG	Pounds per Square Inch Gage
TCH	Tonnes cane per hour

EXECUTIVE SUMMARY

Cogeneration by the Costa Rican sugarcane industry for sale to the national utility offers new opportunities to increase rural incomes and to decrease national fossil fuel dependence. The steps recommended in this study represent a useful and profitable first step in the development of this potential.

This report presents technical options by which five Costa Rican sugarcane mills can immediately begin selling power to the national grid. It assumes only minimal capital investments and no changes in current pricing and contractual terms available to private power producers at the time of the study. All technical options recommended by this study are for implementing changes to existing mills for sale of power to the grid only during the cane crushing season . The mills examined in this study include Central Azucarera Tempisque, SA, El Viejo, Taboga, El Palmar, and Juan Viñas.

The report reveals that cogeneration with these entry-level investments is a financially attractive option in all cases and could be implemented by the 1991 crushing season. By undertaking the modest technical changes indicated, total costs for power export per mill will range from $86,000 to $2,300,000 with the total power exported ranging from 414,000 to 9,100,000 kWh (Table E.1).

Table E.1

Performance and Capital Costs for Initial Cane Power Options

Mill/Option/ Capital Investment	Annual Total Bagasse to Boilers (MT/yr)	Power Export (kW)	Hours of Export Power (hr/yr)	Kilowatt* Hours Export ('000 kWh)	Export Power per Metric Ton Bagasse (kWh/MT)
C.A.T.S.A.					
1. $166,000	80,639	752 200	803 (downtime) 1,309 (grinding)	873.9	10.84
2. $876,000	80,639	2,301 465	803 (downtime) 1,309 (grinding)	2,457.9	30.48
3. $1,266,000	80,639	2,301 2,042	803 (downtime) 1,309 (grinding)	4,425.0	56.07
EL VIEJO					
1. $433,000 (evaporator only **)	97,020	741	1,714 (grinding)	1,269.6	13.07
TABOGA					
1. $80,000 (assumes 5,000 kW T.G. installed)	116,280	1,500 719	565 (downtime) 1,928 (grinding)	2,231.4	19.19
2. $2,321,000 (includes new evaporator set)	116,280	4,315 3,457	565 (downtime) 1928 (grinding)	9,101.5	78.27
EL PALMAR					
1. $1,552,000	98,510	3,054 1,137 660	778 (downtime) 1,921 (grinding) 736 (off-season)	5,046.7	51.23
JUAN VIÑAS					
1. $86,000	30,553	656	631 (downtime)	413.9	13.55
2. $902,000	30,553	458 772 250	631 (downtime) 2,182 (grinding) 2,813 (hydro)	2,676.8	87.61

* Total exported = downtime + grinding

** This is the incremental addition above current expansion investments of $1.3 Million, which will produce about 4,550 kW during the grinding season.

CHAPTER 1 SUGAR INDUSTRY POWER COGENERATION SURVEY

Bagasse Needs, Steam Economy and Power Cogeneration

Detailed power investment options were analyzed for five Costa Rican sugarcane factories. Factories visited include Central Azucarera Tempisque, SA (CATSA), El Viejo, Taboga, El Palmar and Juan Viñas. Sugarcane production and power system characteristics of the five mills surveyed are given in the respective chapters.

The basic design of the five factories visited are quite similar and generally compare favorably with the design of most cane sugar factories operating around the world. The word "most" is used advisedly. Sugarcane factories typically have been designed to provide adequate steam from bagasse fuel for milling and processing work without the excessive accumulation of surplus bagasse that can, in some cases, become a costly disposal problem. Essentially, sugarcane factories are bagasse incinerators that have been designed to produce and utilize steam inefficiently.

In some areas of the sugarcane producing world, bagasse is a valuable by-product used for energy or other secondary product markets. Where secondary product markets exist for bagasse, factories have increased their efficiency in the production and usage of steam and power to accumulate excess bagasse. Markets for bagasse have developed in the paper and fiberboard industries and for export power production. In the latter case, excess bagasse is used to supply energy needs outside the factory for integrated alcohol plants, irrigation pumping, and/or for sale to an outside demand (typically industrial users or the electric utility). In addition, some sugarcane factories have been required to improve their factory and boiler systems' energy efficiencies because a change to new cane varieties resulted in cane with a lower fiber content and a consequent reduction in fuel bagasse availability.[1]

Sugar factories in Costa Rica contemplating the sale of power to the utility power system will have to operate efficiently and continuously. This will call for additional equipment and operational changes at most mills so that more bagasse and/or higher pressure steam will be available for cogeneration power production on a continuous and reliable basis.

---

1 In both Java and Hawaii, it was observed that there was a great variation in the volume occupied by the same weights of bagasse from different cane varieties and the following conclusions were drawn: denser bagasse was superior fuel; denser bagasse was generally richer in cellulose; cane with most fibers, thus less pith content, gave a bagasse of superior value; and the ultimate composition of bagasse is influenced to a great extent by the proportion of rind tissue to pith tissue, the former generally containing more carbon than the latter.

Efficient Steam Production and Usage

Efficient steam production and usage, discussed in the previous Costa Rica cane power study[2] is critical to understanding the equipment recommended in Chapters 2-6 for the five mills. Briefly the salient points for efficient production include the following list.

A. ***Factors Affecting Efficient Steam Production***

1. Cleanliness of bagasse (low soil content) and the production of low moisture mill bagasse in the 46 to 50 percent range (percent moisture content).

2. Use of the minimum amount of excess air required for good combustion.

3. Minimization of air leakage into the boiler through the bagasse feeders, furnace doors and setting, boiler shell and flue gas ducts.

4. Installation of an airheater to heat the required combustion air using boiler flue gas in order to reduce boiler heat losses to the chimney.

5. If further flue gas heat recovery is found to be possible without causing corrosion problems in the flue gas system, an economizer or other type of feedwater heater for heating the boiler feedwater to a higher temperature can be installed. For every 10°F rise in boiler temperature, there is a fuel savings of approximately 0.25 percent on cane.

6. Recover boiler blowdown, if the blowdown system is continuous, by flashing the blowdown to the exhaust steam system.

7. Reduce steam leakage, recover condensate from steam traps and maintain insulation in good condition on all steam piping and heat transfer equipment. The tabulations in Table 1.1 and 1.2 indicate the potential scope of heat losses due to lack of adequate insulation and steam leakage.

B. ***Factors Affecting Efficient Steam Usage***

1. Mill at design milling rate rather than slowing down to one-half or three-quarter speed, especially when low cane supply is anticipated. Generally, it is better to stop milling operations until an adequate cane supply is available. A study of turbine performance curves (See Appendix A) will indicate how steam

---

2 Tugwell F., et al., Electric Power from Sugarcane in Costa Rica, Bureau for Science and Technology, U.S. Agency for International Development, Washington, D.C., 1988.

consumption per horse-power-hour increases when the turbine is operated below design horsepower or much below design speed.

2. Mechanical drive steam turbines with steam rates below 30 lbs/Hph should be used in new milling installations or to replace existing units being discarded. The same philosophy of using efficient steam rate turbines should also be applied to turbogenerator replacements.

3. Evaporator - pan floor - juice heater operations are the largest users of heat in the sugar factory. Steps can be taken to significantly reduce exhaust steam flow to these stations by the extra use of steam. This can be accomplished by using evaporator vapors for pan operations, juice heating and more extensive use of vapors in evaporation of cane juice by using quadruple and quintuple effect evaporation coupled with the foregoing extra use of vapor. In recent years, the high cost of fuel in the process industries has again made the use of thermocompression and mechanical recompression economically attractive for evaporator installations. In designing a sugar factory steam balance, the availability of exhaust steam should never exceed 80 to 90 percent of the processing house steam demand in order to prevent or minimize exhaust steam blow-off to the atmosphere.

Summary

From the foregoing comments, it can be seen that fuel and steam economy at sugarcane mills center on (1) the production of bagasse with minimum moisture content and maximum heat value, (2) the efficient operation of the boilers with maximum utilization of waste heat and minimum stack losses and (3) the efficient use of steam in power generation (mechanical and electrical) as well as in the sugar factory during processing of juice to sugar.

Table 1.1

Approximate Heat Loss from Bare and Lagged Flat Surfaces

INTERNAL TEMPERATURE		BTU/FT^2/HR		
°F	Bare	1" Lagging	1 1/2" Lagging	2" Lagging
100	60	10	7	–
200	295	45	30	25
300	645	85	60	45
400	1140	125	90	70
500	1810	175	125	95
600	2670	–	160	120
700	3750	–	–	150

Table 1.2

Steam Loss By Steam Leakage

Diameter of Hole - Inches	Pounds Steam Leakage per 24 hours	
	100 Psig	300 Psig
1/16	14	33
1/8	56	132
3/16	126	297
1/4	224	528

CHAPTER 2 Central Azucarera Tempisque

Existing Equipment Observations

The Central Azucarera Tempisque, SA (CATSA) factory has recently undergone management changes (sale from national to private cooperative ownership). The management is very interested in exploring export power potential, however, it may need time to undertake the recommended changes in this study.

Since CATSA has the potential to produce a variety of products, its internal and ancillary power needs at the complex can be high. However, if CATSA's cane harvesting and resource recovery of excess bagasse improve, and it makes power system investments, it could export power for sale to the grid as well as support internal steam/power needs.

The factory's cane production, power needs , and bagasse characteristics are shown in Table 2.1 and Appendix B. At present CATSA has more than adequate capacity in the boilers and turbogenerators to meet normal operating requirements for steam and electricity. The problem confronting the factory is the high demand per ton cane milled for both high pressure steam and exhaust steam. There is practically no surplus bagasse available at CATSA due to high no cane and factory lost time and to high plant steam losses.

A recent study[3] estimated that CATSA would have an annual surplus of 6,152 tonnes of bagasse when milling 3,000 tonnes cane per day and a deficiency of 13,691 tonnes of bagasse when milling 4,400 tonnes cane per day. These data indicate there is a considerable amount of excess exhaust steam being blown to the atmosphere at the higher milling rate thus requiring extra bagasse to satisfy the high live steam demand. This conclusion is borne out by the observation of CATSA's engineers that no surplus bagasse is accumulated during the zafra (cane crushing season) when milling 150 to 160 tonnes of cane per hour.

The implication of such inefficiencies is that there is not sufficient bagasse to supply the additional steam that would be necessary to export 1000 to 1500 kW of power when operating with the existing factory steam balance and boiler operations, particularly when the factory and "no cane" lost time amounts to 32.6 percent exclusive of the 8.3 percent scheduled downtime for programmed and holiday non-operating time.

Existing Factory, Steam and Power Plant Characteristics

The selected factory and plant characteristics are summarized below in Tables 2.1 and 2.2 (and Appendix B). As seen in Tables 2.1 and 2.2, it appears that CATSA would have the

---

3 F.C. Schaffer and Associates, Inc., Evaluation and Technical and Financial Assessment Central Azucarera Tempisque, S.A. (CATSA), International Resources Group, Ltd., Setauket, NY, 1987.

existing capacity to export 2,000 kW of cogeneration power provided several management and technical changes were undertaken. These include changes in the sugar factory steam balance, boiler operations and lost time hours to reflect the need for improved energy usage efficiency when cogeneration for export power becomes another by-product operation of the sugar factory.

System Characteristics

Feedstock Availability	
a. Cane Production:	
- Hourly (Tonnes Cane per hour)	175
- Daily (Tonnes Cane per day)	3,850
- Total Production (Tonnes Cane milled)	229,000
c. Grinding hours/season	1,309
d. Downtime hours/season	804
e. Evaporation per hour (12.49 Brix to 65.00 Brix) at 108.5 percent clarified juice on cane milled per hour (tonnes)	153

At present, CATSA's boiler capacity is 370,000 pounds per hour of 250 Psig, 500°FTT, plus a 60,000 pound per hour 160 Psig boiler and two operating backpressure turbogenerators of 3,000 kW and 2,000 kW capacity. Factory power demand is said to fluctuate between 1,600 and 2,000 kW. The distillery uses about 90,000 lbs of exhaust steam per hour and 900 kW when producing 10,000 liters of alcohol per hour. When the distillery is operating on a mixture of clarified juice, A-molasses and imported final molasses, the sugar factory steam and power consumption would be sufficiently reduced to offset the additional distillery load.

Factory operating data and information on the operation of the cane knives seem to indicate that cane preparation is not adequate for the excessive amount of imbibition used (39.14 percent on cane or 230 percent on fiber). This is indicated by the high bagasse pol (the value determined by direct or single polarization of the normal weight solution in a saccharimeter).of 2.4 percent when the milling plant (six 36" x 72" mills) is operating at a fiber milling rate (FMR) of 7.5 or lower (assuming 7.2 square feet of mill roll surface per ton cane hour). If cane preparation were improved and the imbibition were decreased to 34.0 percent imbibition on cane (200 percent on fiber), the evaporation steam load would be decreased by about 7,000 pounds per hour when milling 175 tonnes cane per hour. Installation of a Tongaat type shredder using 60 horsepower per ton fiber hour and using only a levelling knife should be evaluated to determine if reduced bagasse moisture and pol would provide a satisfactory payback. Power requirements for the mills would also be reduced. Exhaust steam is piped to the distillery through a bare 30 inch diameter pipe that is over 600 feet long. The heat loss for this length of pipe, uninsulated, amounts to approximately 1,198 pounds of steam per hour. It should be insulated if the distillery operates continuously.

Table 2.1

CENTRAL AZUCARERA TEMPISQUE SA (CATSA)
PLANT/FACTORY DATA
(Production Statistics 1989)

228,951	TC/YR
153	TC/Hr Grinding Production Rates
2,414	Gross Production Hours/Yr (101 days/yr)
1,495	Net Production Hours/Yr (62 days/yr)
133	Hours - Cleanup, holidays, others (6% of gross)
919	Hours - Lost Time (38% of gross)
62%	Grind Time Eff., Overall Net/Gross (12% no cane)
75%	Grind Time Eff., Factory Percentage Available Grind Time
5,438	Tonnes Raw Sugar/yr
16,226	Tonnes White Sugar/yr
22,392	Tonnes Total Sugar/yr, 96°
10	TC/TS
—	Gal. or Liters Alcohol
11,723	Tonnes Final Molasses, 85 Bx
—	Other products
82,280	Tonnes Bagasse
49	Bagasse Moisture (percent mcwb)
2	Pol Bagasse
39	Imb/Cane
13	Mixed Juice Bx
81	Mixed Juice Pty
13	Cane Juice Bx
81	Cane Juice Pty
65	Syrup Bx
1,800	kWh Generated/Hour grinding, Avg.
—	Tonnes/yr Surplus Bagasse
—	Surplus as Percent Total Bagasse
103	Mixed Juice Percent Cane

Table 2.2

CATSA Steam and Power Demand and Export Potential

Steam and Power Demand	Units
Steam	Pounds per hour
I. High Pressure Steam Demand (250 Psig, 500°FTT)	
1. Milling Plant	143,715
2. Boiler Plant	27,464
3. Miscellaneous Uses	6,000
4. Power House (2,000 kW)	84,000
Total	261,179
II. Exhaust Steam (15 Psig) Available Per Hour	
1. Available Exhaust from High Pressure Steam (261,179 - 6,000)	254,179
2. Less Steam Trap, Radiation and deaerating heater steam	20,914
Total	233,265
III. Evaporation Steam required	219,177
IV. Surplus Exhaust Steam per hour (II minus III)	14,088
Export Power Generation	Kilowatts
I. Factory Power Demand	1,600-2,000
II. Export Power Capacity	200 (Grinding Hrs) 752 (Downtime Hrs)

Export Power Options

The foregoing background data and calculations of available steam for energy production confirms the previously mentioned high usage of high pressure and exhaust steam (1493 pounds per hour and 1,252 pounds per hour respectively, per tonne cane hour). Consequently, the potential for CATSA to deliver power to ICE without major capital investments is rather limited.

The proposed technical configurations for exporting power during the cane crushing season for CATSA include:

Option 1. ***Minimum investment, minimum power export.***
Add bagasse feeders, electrical switchgear, transformer, and instrumentation.

Option 2. ***Install equipment items of Option 1 plus Additional Turbogenerator***
Add either a high pressure condensing turbogenerator or a low pressure condensing turbogenerator. The high pressure unit would be slightly more efficient overall than the low pressure unit whose steam must first pass through existing inefficient back pressure turbogenerators.

Option 3. ***Option 2 and Evaporator Changes***
Convert the existing evaporators to multistage juice heating for greater steam economy and also install the equipment components of Options 1 and 2.

A summary table with power production and financial characteristics for each option are outlined in Table 2.3. The technical configuration for CATSA options are presented in Figure 2.1.

Option 1 - Minimum Investment, Minimum Export Power

Under the minimum investment/minimum power option, only minor management and equipment efficiency improvements would be made at CATSA The factory operations would remain basically similar to current operations but with changes made in boiler and milling operations along with equipment additions to the boilers and the power house.

Table: 2.3

Financial Analysis of Power Production Options for C.A.T.S.A.

Option	Power Export (kW)	Hours of Power Export (hrs/yr)	Kilowatt Hours (kWh) Exported	Capital Cost ('000 $US)	Electricity Revenues 2-Yr Contract ('000 $US)	Electricity Revenues 8-Yr Contract ('000 $US)	Financial NPV 2-Yr Contract ('000 $US)	Financial NPV 8-Yr Contract ('000 $US)
(1) Minimum Investment	752 200	803 (downtime) 1,309 (grinding)	873,910	166	Yrs 1-2 52.2 Yrs 3-25 25.0	Would not get 8-yr contract	NPV (10%) + 130.5 NPV (15%) + 90.8 NPV (25%) + 59.6	Too small for 8-yr contract
(2) Major Investment No evaporator	2,301 465	804 (downtime) 1,309 (grinding)	2,457,871	876	Yrs 1-2 146.7 Yrs 3-25 70.4	Yrs 1-8 146.7 Yrs 9-25 70.4	NPV (10%) + 35.8 * NPV (15%) - 5.9	NPV (10%) + NPV (15%) +
(3) Major Investment Evaporator plus Option 2 changes	2,301 2,042	804 (downtime) 1,309 (grinding)	4,521,532	1,266	Yrs 1-2 269.9 Yrs 3-25 129.6	Yrs 1-8 269.9 Yrs 9-25 129.6	NPV (10%) + 357.4 ** NPV (15%) + 220.7 NPV (25%) + 143.4	NPV (10%) +357.4 NPV (15%) +220.7 NPV (25%) +143.4

* This is for 229,000 tonnes cane. For 275,000 tonnes cane the NPV (10%) would be + 187.0, NPV (15%) + 107.6 and NPV (25%) + 68.8.
** For 275,000 tonnes cane NPV's would be (10%) + 642.7, (15%) + 435.0, (25%) + 287.8. Discount rates in parentheses.

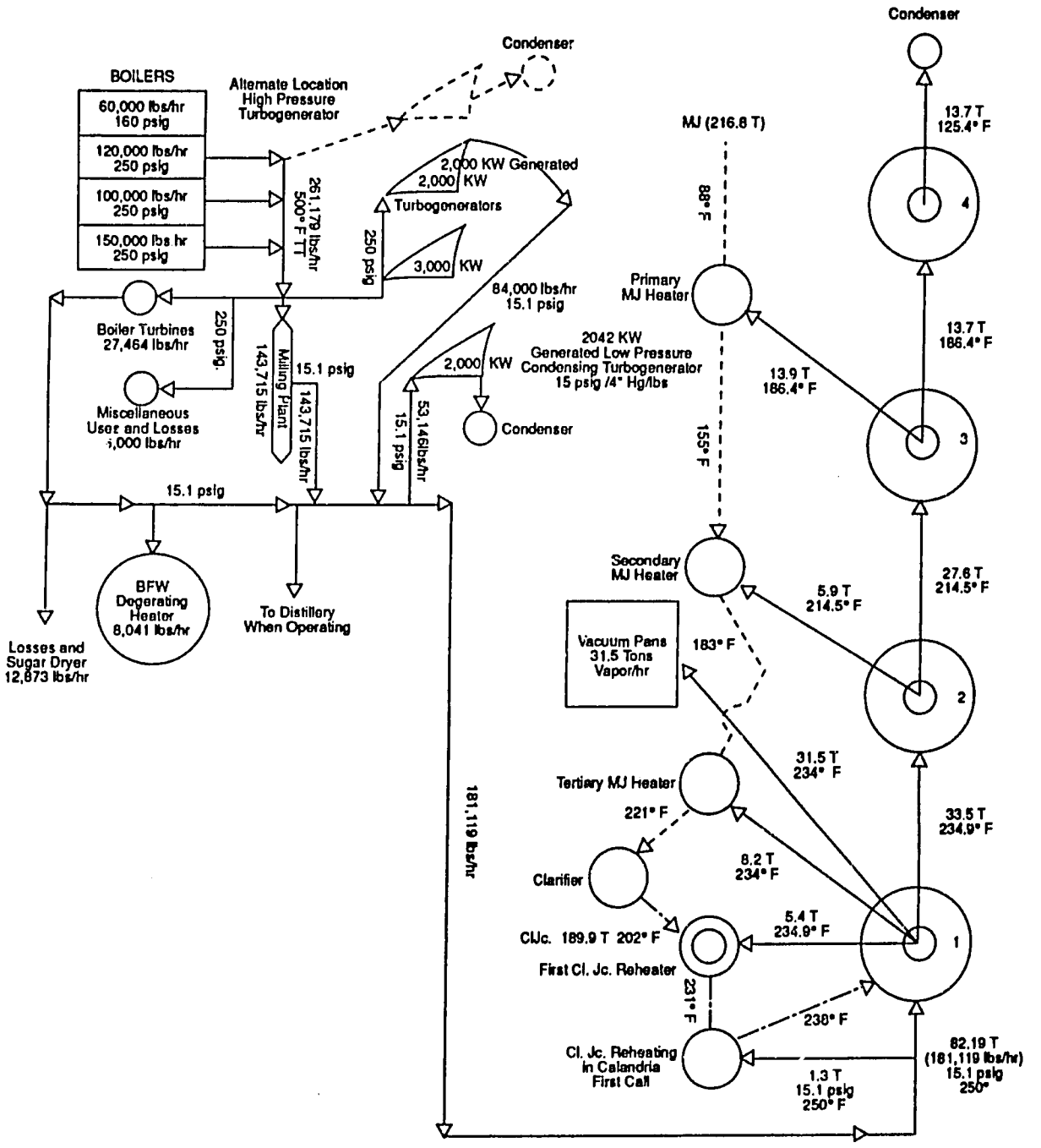

C.A.T.S.A: Steam and Power Diagram for Grinding Hours Using Modified Evaporator and Juice Heating System for 175 TCH

Figure 2.1

Under Option 1, the equipment additions and estimated installed costs are as follows:

Additional Equipment	Cost ($ US)
1. Bagasse Feeders for the three large boilers (See Appendix C)[4]	49,000
2. Electrical switchgear for interconnection and synchronization with ICE*	80,000
a. Internal Electrical switchgear (generators to power export transformers) which include items indicated in Appendix D plus a complete shared Synchronization Panel.	44,000
Freight, Duty and Installation	11,000
b. Transformer (Rebuilt) and Internal Protection 1000 KVA, 480 VAC Delta/125,000 VAC Wye	14,000
Freight, Duty and Installation	3,000
c. Interconnection (transformer high side to public utility line) which includes lightning arrestors, grounding protection, metering, outdoor switch (fused) and disconnect switch	19,000
Freight Duty and Installation	5,000
d. Electrical Costs Contingency	3,000
3. Boiler instruments for boiler flue gas CO_2 readings and airheater flue exit temperatures (See Appendix E)[5]	18,000
Total Cost	166,000
Export Power Generated (kilowatt hours)	873,910

* Sized for ultimate export power (kilowatt) capacity of options 2 and 3 which is 2,301 kW during lost time hours.

---

4 As stated in the Appendix A text, the rotary type feeder is preferred; however, both the counter balanced flap or rotary types will assist in reducing air leakage in to the furnace, thus increasing the CO_2 content of the flue gas and lowering the excess air percentage and quantity and, consequently, lower heat losses through the stack. The factory should attempt to hold the CO_2 content of the stack gas above 12% which is equivalent to 72.5% excess air. Reducing the excess air from 130% (estimated for present operation) to 72.5%, and based on bagasse with a HHV 4037 BTU per pound will increase the steam generation from the available bagasse (135,056 lbs) by 7.7% when all other boiler operating conditions remain the same. The additional steam would be available for power generation. Air leaks into the furnace and boiler ductwork should be held to a minimum. CO_2 readings should be obtained each shift from each operating boiler; more, if large reading variations are found so as to identify the cause.

5 CO_2/O_2 Extractive Type Analyzer - Model 2Type ICCS
Maximum length of cable - 50 feet $4,900.00. Available from: Bailey Instruments Agent
499 Nibus Street, Unit D, Brea, CA 92621, Telephone (714) 990-4009

In order to obtain low bagasse moisture, the mills should be operated as closely as possible to the mill settings design capacity. When "no cane" periods are anticipated, the mills should be stopped when the available cane is ground rather than operated at reduced capacity until sufficient cane is again available for full speed operation. Boiler operation would also be regulated accordingly.

Under this new configuration, there would be 10.95 tonnes of surplus bagasse available per lost time hour. This amount of surplus bagasse could produce 52,636 pounds of steam per lost time hour. After allowing steam for other downtime uses, approximately 44,500 pounds would be available for power generation. Assuming 20 percent of the power generated would be used in the factory, about 752 kW would be available for export. During 803.9 downtime hours, a total of 612,250 kWh would be exported.

The steam passing through the 2000 kW back pressure turbogenerator would be condensed in the evaporators or the vacuum pans. An additional 200 kW should be available during the grinding hours (1309 hrs) from the 2000 kW turbogenerator. With these additional kilowatt hours, the total power export would be 873,910 kWh.

A preliminary financial analysis based solely on electricity revenues and equipment costs (minimum investment will not significantly change O&M costs) is given in Table 2.3.[6]

Option 2 - Install Equipment of Option 1 plus a 2000 kW Condensing Turbogenerator

Rather than implementing only minimum power/factory changes, CATSA could install an additional turbogenerator as well as adding other ancillary equipment. Under Option 2, the proposed equipment and estimated installed cost are shown below.

Additional Equipment	Cost ($US)
1. Condensing Turbogenerator 2,000 kW, 2,400 VAC, 250 Psig, 500 FTT/3" Hg Abs.	512,000
Freight, Duty and Installation	127,000
2. Internal Electrical Switchgear (generator to power export transformers) and Turbogenerator Control Panel which includes items indicated in Appendix D such as Disconnect Switches, Main Circuit Breakers, PT's and CT's for Instruments and Relays, Locking	

6 Since the 1989 Executive Decree indicates that these minimum investments will receive only 2 year contracts from I.C.E., the average purchase price assumed is $0.0597 the first two years and $0.0287 thereafter. The loan is assumed to be given at concessionary rates of 11%, since costs are not converted into colones, with a debt/equity ratio of 4/1 and a grace period until the end of the second operating year with a 10 year repayment schedule. The NPV on a $166,000 investment ($132,800 loan and $33,200 equity) are shown in Table 2.3. The internal rate of return is 7.5%.

Relay, Under Frequency Relay, Under Voltage Relay, Instantaneous Time Delay - Phase Balance Relays, Generator Voltage and Frequency Meters plus a complete shared Synchronization Panel	64,000
Freight, Duty and Installation	16,000
3. Transformer (Rebuilt) and Internal Protection 24,000 VAC Delta to 24.5 KV Wye, 2,500 KVA	23,000
Freight, Duty and Installation	6,000
4. Interconnection (transformer height side to Public Utility line) which includes Lightning Arrestors and Grounding Protection, Metering, Outdoor Switch (fused) and Disconnect Switch (not fused.)	28,000
Freight, Duty and Installation	7,000
5. Electrical Costs Contingency	26,000
6. Boiler Instrumentation (See Appendices C and D)	18,000
7. Bagasse Feeders (See Appendix C)	49,000
Total	$876.000
Export Power Generated	465 kW (grinding Hrs) 2,301 kW (Lost Time Hrs)*

* Assumes crop 229,000 tonnes of cane/season.

If a new turbogenerator set is purchased, a high pressure condensing unit (250 Psig/3" Hg Abs.) would be preferred because of the higher overall system efficiency. However, if a suitable lower-cost used low pressure unit (15 Psig/3" Hg Abs.) can be purchased, it could be installed to take steam from the exhaust steam system. Figure 2.1 indicates the possible location of the units in the factory steam system. The high pressure condensing unit would produce about 14.1 percent more kilowatt hours than the low pressure condensing - back pressure units combined from the same quantity of high pressure steam.

A low pressure condensing turbogenerator system would provide 2,301 kW of export power during the downtime hours and 465 kW during the grinding hours. This would provide 2,457,871 kWh when processing 229,000 tonnes of cane. A crop of 275,000 tonnes of cane would increase the export power to 2,939,614 kWh. As will be noted in the financial results, the increased volume of cane greatly enhances the profitability of cogeneration for the factory.

The financial results are shown in Table 2.3, assuming similar concessionary loan terms and other financial conditions as Option 1.[7] Table 2.3 assumes current cane production at the mill, but the advantage of increasing total cane production at the mill on the financial

[7] Under similar loan terms, the loan is for $700,800 and equity of $175,200.

results is shown below in Table 2.4, where the NPV's increase five-fold with the change in cane production.

Additional savings of bagasse can be made with other factory adjustments, which will increase the financial returns. Whether or not greater production of export power will result from distillery operations will depend up the raw materials used in the distillery and 32 percent maceration, the factory would require about the amount of maceration water applied at the mill. Generally, it can be expected that additional export power will be generated when the distillery is operating under the conditions mentioned in the following paragraph.

For example, if the distillery (10,000 liters per hour) uses 60 percent of the available clarified juice and first (A) strike molasses as feed stock for the fermentation tanks, this configuration would leave enough material for about 4.2 tonnes of A strike sugar per hour. At 99,600 pounds per hour of exhaust steam (15 Psig) for processing and the distillery would require 90,950 pounds for a total of 190,550 pounds per hour. This is 42,719 pounds per hour of surplus exhaust steam or 28,627 pound more surplus exhaust steam than the 14,088 pounds (Table 2.2) assumed to be used when the distillery is not operating. This surplus would provide an additional 1,067 kW of which the distillery would use about 900 kW. If the maceration percent cane were increased to 39 percent the surplus steam would decrease from 28,627 pounds per hour to 17,880 pounds which would provide 667 kW or 400 kW less than when using the lower maceration percentage.

Table 2.4

Impacts of Increased Cane Production on CATSA Option 2 Financial Returns

Revenues/Costs		Costs by Cane Production 229,000 Tonnes ($US)	275,000 Tonnes ($US)
Electricity Revenues (2-year contract)			
	Years 1 and 2	146,739	$175,000
	Years 3 to 25	70,345	84,133
Financial Returns			
	NPV (10%)	+35,806	+186,976
	NPV (15%)	-5,931	+107,564
	NPV (25%)	—	+68,814
	IRR	-1.4%	+0.7%

Option 3 - Options 1 and 2 Plus Evaporator Changes

Convert the Present Quadruple Effect Evaporators for Primary, Secondary, and Tertiary Heating of Mixed Juice and Clarified Juice with Vapors from first, second and third cells.

Option 3 builds upon the changes undertaken in Option 2, with the addition of equipment for improving the efficiency of exhaust steam usage by the evaporator juice heater - vacuum pan stations to increase export power potential from the factory. The equipment and total cost for Option 3 is estimated below.

Additional Equipment	Cost ($ U.S.)
1. Option 1 Cost	166,000
2. Option 2 Cost	710,000
3. Juice Heaters and Evaporator Cells	390,000
Total Costs	1,266,000
Export Power Production	2,042 kW (Grinding Hrs) 2,301 kW (Lost Time Hrs) 4,521,532 kWh

The evaporators, being the largest user of exhaust steam in the sugar factory, have always been the focal point of steps taken to reduce steam consumption. In this Option, the extra use of steam has been maximized within economic limits. Fourth cell vapor heating of

juice has a low heat transfer rate; hence, it was not included. A quintuple effect was also evaluated, however, the additional cost over the quadruple system proposed did not appear to be warranted.

The layout of the proposed quadruple effect system is shown in Figure 2.1 along with the total factory steam and power production and usage system. The heater and evaporator heating surfaces requirements are listed below in Table 2.5 and compared with the existing equipment available. It is assumed all cell condensates are flashed to the next lower pressure cell.

The installed cost of the new heaters, valves and piping is estimated at $390,000. When added to capital investments of Options 1 and 2, the total costs for new equipment approach $1.3 million. Steam savings as compared to the present steam usage in the evaporators (but based on 175 tonnes cane per hour) is 37,176 pounds per hour. Export power generated would amount to 2,042 kW or 2,671,549 kWh during the grinding hours and during lost time hours, using surplus bagasse, 2,756 kW less 16.5 percent for factory use would be generated or 1,849,983 kWh. The total export power generated would amount to 4,521,532 kWh.

Table 2.5

Comparison of Surface Area Required for CATSA Option 3

Plant Equipment	Surface Area Square Feet Required	Existing
1. Juice Heaters*		
a. Primary Mixed Juice Heater	3,600	———
b. Secondary Mixed Juice Heater	2,120	———
c. Tertiary Mixed Juice Heater	1,450	3,000+3,000
d. Clarified Juice Heater	3,770	1,800+1,425
e. Distillery Juice		3,300
Total	10,940	12,545
2. Evaporator Cells**		
a. Pre or First Cell	23,112	30,000
b. Second Cell	9,061	9,000
c. Third Cell	7,820	9,000
d. Fourth Cell	6,235	10,000

* Note: The heaters must be installed at an adequately high elevation to assure sufficient hydrostatic, head in order to prevent flashing in the condensate pump which must have an adequate Net Positive Suction Head (NSPH).

** From the foregoing, it is apparent no additional evaporator heating surface is required. Medium scaling heat transfer coefficients were used and first and last cell coefficients were increased 5 to 10% respectively because of potentially heavier scaling. Under the proposed scheme, the fourth cell condensing load is reduced by approximately 45% when compared with the existing arrangement. About one-half of the present juice heaters are used as spared for cleaning while operating; hence, in the proposed system four additional heaters totalling 8100 square feet would have to be purchased.

The financial results for Option 3 are presented in Table 2.3 and Table 2.6, with the latter showing the impact on financial returns of increased crop processing.[8] Again, the increase in the amount of fuel (added cane tonnage) greatly improves the financial results (Table 2.6). CATSA also has considerable rice mill fibrous waste available which could be used to supplement the available bagasse fuel and further improve the profitability of the cogeneration investment. An eight-year new plant power contract revenue basis plus use of a high pressure condensing turbogenerator would more than double the IRR (Table 2.3).

Table 2.6

Impacts of Increased Cane Production on CATSA Option 3 Financial Returns

Revenues/Costs	Costs by Cane Production 229,000 Tonnes ($US)	275,000 Tonnes ($US)
Revenues		
Years 1 and 2	269,943	324,202
Years 3 to 25	129,573	155,617
Financial Returns		
NPV (10%)	+357,348	+642,719
NPV (15%)	+220,758	+434,979
NPV (25%)	+143,357	+287,769
IRR	1.5%	4.2%

Additional export power could be obtained at the plant by installing mechanical drive turbines with steam rates of 29 pounds of steam per horsepower hour or lower. This could reduce steam requirements by approximately 26,000 pounds per hour. This amount could be diverted to export power production. Studies of horse power requirements of existing units using curves of the type shown in Appendix A would have to be made. The installed costs for the nine turbines in question could amount to $700,000. Consideration could also be given to replacing existing inefficient BPTG units (42 lbs. steam/kWh) with a unit or units having a steam rate of 28 lbs/kWh. This would increase the kilowatts 50 percent when using 84,000 lbs of steam per hour.

Option Recommendations: Advantages/Disadvantages

The power export program at CATSA should begin right away with Option 1, a minimum investment with export sales of 873,910 kW. The long term objective though should be to

8 Similar loan conditions and contract terms are used in the comparison of electricity revenues to equipment costs. The loan is $1,012,800 and equity investment is assumed to be $253,200.

export more power than presently possible under Option 1 which due to its low power production and fuel availability can only export 10.84 kWh/tonne bagasse.

By starting immediately with Option 1, CATSA will first determine how much efficiency improvements can be made in boiler plant operations so as to generate more excess bagasse and/or surplus high pressure steam by increasing flue gas CO_2 percentage and boiler plant feedwater temperature. At the same time, the factory would be determining if high pressure steam consumption and milling maceration water can be reduced without lowering milling pol extraction. Also during this period, CATSA would be in a better position to make future cane crop projections and estimates of rice waste tonnage availability, since the cooperative has access to unused rice hulls from its other agricultural processing facilities.

The advantage of beginning with Option 1 would be the earning of revenues from power sales at the earliest date. In addition, CATSA's management and staff would gain experience with power cogeneration operations and the confirmation of how much improvement can be obtained in high pressure steam production and usage.

The disadvantage of not going directly to Option 3 is the lower revenue and lower kilowatt hour/tonne bagasse (Option 3 - 56.07 kWh). However, the delay would also provide more time to price out new and used equipment (such as high pressure condensing and efficient back pressure turbogenerators and juice heaters) and to modify specifications on the basis of new operating data from the Option 1 experience.

The long range objective should be to exceed even Option 3 configuration production results and to reach an export power production level in the 80 to 100 kWh/tonne bagasse range. To reach this objective, the mill may be required to replace the existing inefficient BPTG units with one having a steam rate below 30 pounds per kilowatt hour. Certainly, more favorable financial terms and power purchase prices would also encourage CATSA, like the other mills, not to underinvest in surplus power production.

CHAPTER 3 EL VIEJO

Existing Equipment Observations

The El Viejo factory has an extensive modernization program underway on its power plant and sugar factory. Current production characteristics for El Viejo are shown in Table 3.1 and Appendix B. At the time of this study, the mill is targeting the late 1990 cane season for selling export power production. Its program includes the installation of (1) a 200,000 lbs/hr 450 Psig, 650°FTT suspension firing boiler, and (2) two 450 Psig turbogenerators (a 7,500 kW condensing turbogenerator at 450 Psig 650°FTT/3" Hg Abs; and a 5,000 kW Back Pressure Turbogenerator at 450 Psig inlet pressure, automatic extraction at 175 Psig and exhausting at 20 Psig).

The objective of El Viejo's modernization plan is to produce 4,550 kW on the condensing turbogenerator and 1,600 kW on the 5,000 kW non-condensing turbogenerator. The sugarcane factory uses about 1,200 kW in the sugar and power plants with another 300 to 400 kW used outside for the village, offices, shops and pumping. This leaves at least 4,550 kW for export power to the public utility system. As the additional condensing turbogenerator will be operating about 61 percent of rated capacity and the non-condensing unit at 32 percent of rated capacity, the turbine efficiencies will be lower than design capacity efficiencies; hence, the steam usage per kilowatt hour will increase an average of approximately 8.1 percent. When normal power outputs are determined for each turbogenerator, consideration might be given to renozzling them for more efficient steam usage performance at the lower power output rating.

Planned Steam and Power System Additions

To take advantage of the new private power market, El Viejo has prepared an operating plan for adding incremental steam and power generation and usage at the mill. Figure 3.1 is a copy of the plan with a few minor modifications.[9] It would appear that El Viejo will be able to commence firm cogeneration power deliveries in 1991. The deliveries would be in the 4 to 5 MW range, costing approximately $1.3 million.

These deliveries could be increased if steam usage economy measures are financially justified. The present public utility power line from El Viejo (approximately 13 km) can

9 Figure 3.1 assumes 150 tonnes cane processed per hour. The mill manager indicated that future plans call for a milling rate of 175 to 180 MTCH and possibly 200 MTCH at a later date. Induced draft fans, forced draft fans, and boiler feedwater pumps would all be driven by electric motors.

Table 3.1

EL VIEJO
PLANT/FACTORY DATA
(Production Statistics 1988)

320,000	TC/YR
150	TC/Hr Grinding Production Rates
2,448	Gross Production Hours/Yr (102 days/yr)
2,000	Net Production Hours/Yr (83 days/yr)
72	Hours - Santo Semana (3 % of Net for Holy Week)
448	Hours - Lost Time (18% of gross)
82%	Grind. Time Eff., Net/Gross (3% no cane)
84%	Grind. Time Eff. Factory Percentage Available Grind. Time
—	Tonnes Raw Sugar/Yr
—	Tonnes White Sugar/Yr
—	Tonnes Total Sugar/Yr
—	TC/TS
—	Gal or Liters Alcohol
—	Other Products
101,107	Tonnes Bagasse
51	Bagasse Moisture (percent mcwb)
3	Pol Bagasse
28	Imb/Cane
17	Mixed Juice Bx
—	Mixed Juice Pty
17	Cane Juice Bx
—	Cane Juice Pty
65	Syrup Bx
1,500	kWh Generated/ Hour Grinding, Avg.
2,500	Tonnes/Yr Surplus Bagasse
3	Surplus as percent Total Bagasse
96	Mixed Juice Percent Cane

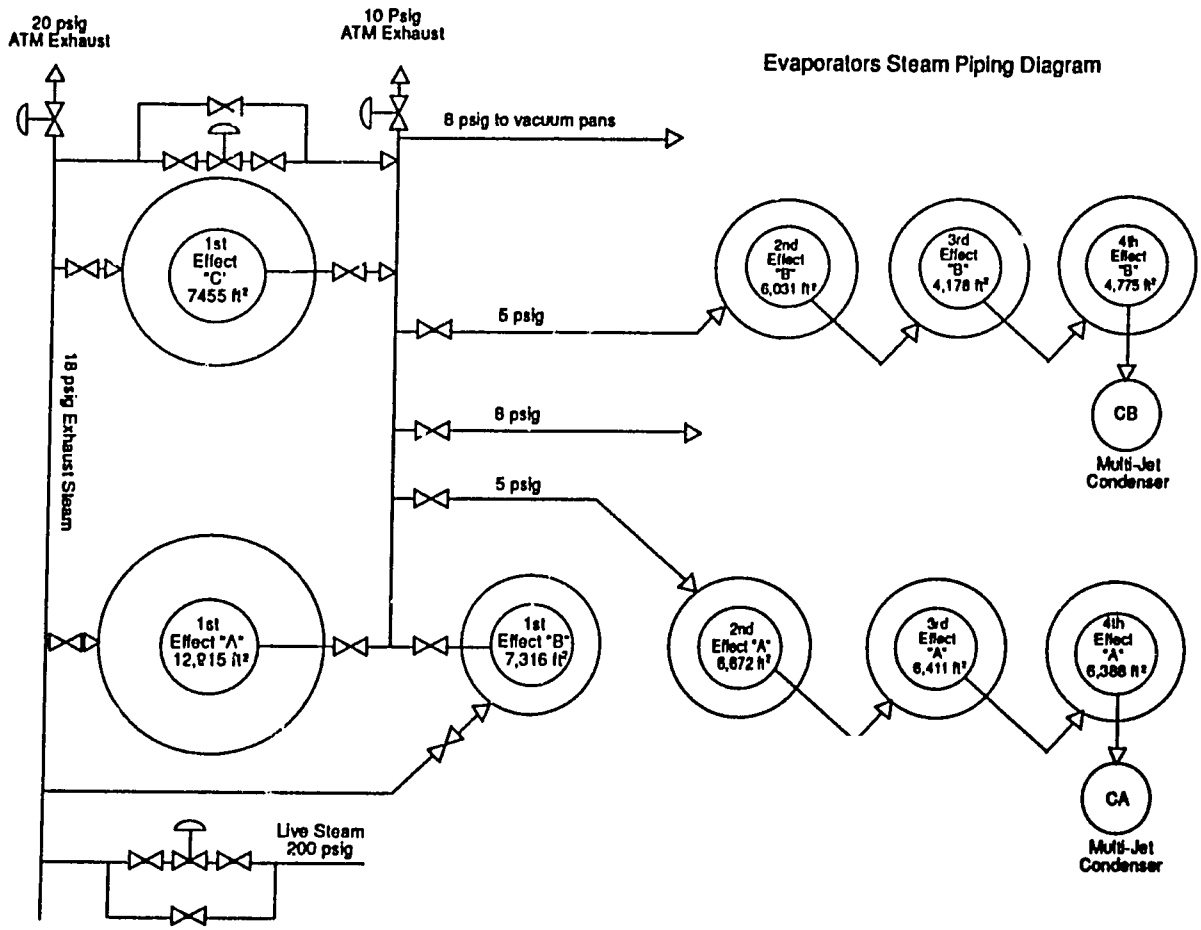

EL VIEJO: Present Configuration
Figure 3.1

only handle 5 MW. Higher line voltages or a heavier wire line will have to be used if El Viejo wants to deliver power in excess of 5 MW. Details on the components of the used, rehabilitated 450 Psig boiler that El Viejo is installing were not available. When the boiler was operating at Kohala in Hawaii, an airheater was used to heat the combustion air from 80°F to a range of 355° to 425°F. The hot combustion air is essential for efficient suspension burning of 50 percent moisture content bagasse using metering bagasse conveyors with mechanical air sweep bagasse feeders. Flue gas exiting the air heater will probably be in the 375° to 425°F.

Tentatively, El Viejo plans to operate the milling plant mechanical drive turbines at 400 to 450 Psig, which would decrease the exhaust steam supply from this source and thus allow more high pressure steam to be used for power generation. This could reduce steam consumption at this station 15 to 30 percent, depending upon the final configuration and pressures used. El Viejo will have to consider desuperheater stations for both the high pressure and exhaust steam systems where pressure reducing valves are used.

El Viejo is installing adequate pan capacity for heating of all pans with vapor from the pre-evaporator. Partial heating of mixed juice is also carried out with these vapors. If they go to primary, secondary and tertiary heating of the juices and syrup with vapors from the pre-evaporator and first and second cells, and continue heating the pans with vapor they could reduce their exhaust steam demand by approximately 9 percent. As additional juice heaters and evaporating surface may have to be installed, the economics of such an improvement might not be favorable due to the short season of export power sales.

The factory will also want to look into the economics of insulating all of their equipment and steam pipelines and recovering all blowdown and steam trap condensate once they have a firm value for energy payments and steam usage per kilowatt hour exported.

Export Power Trials - May, 1989

In May 1989, El Viejo sold export power for almost 3 weeks to the public utility grid after the factory had ceased its cane processing operations. This trial proceeded quite smoothly, and was regarded by both El Viejo and ICE management as highly successful. The mill used its stored excess bagasse for these trials.

Weekly power deliveries by El Viejo of 51,856 kWh (first), 73,989 kWh (second) and 89,600 kWh (third) indicate the improvement over the period as additional operating experience was obtained. The third week had problems with electrical storms and wet bagasse, yet deliveries were the best of the test. A resynchronization problem with ICE encountered after a storm in week 3 can be eliminated by adding the more sophisticated interconnection electrical switchgear specified by ICE and by the operator waiting to reconnect until he is certain that the larger power block (ICE) has stabilized system conditions after the interruption by the electrical storm.

Power Options

El Viejo will have in place, sometime during the first quarter of 1990, all the additional equipment required to export 4,550 kW to the public utility grid. In addition, they will be seeking ways to profitably increase the amount of export power produced from their existing bagasse supply. One of the more effective means of accomplishing this objective is to reduce the exhaust steam requirements of the juice heaters - evaporator - vacuum pans equipment without reducing sucrose extraction by decreasing maceration percent cane.

Option 1 Sugar Factory Efficiency Improvement of Juice Heaters

In addition to making the current planned power system changes, El Viejo could benefit from improving juice heating in its sugar factory. Changing the juice heating system for both evaporator sets (A and B) to primary, secondary and tertiary mixed juice and clarified juice heating with first vapor still being used on the pan floor and for heating clarified juice is one option. The proposed equipment and costs are shown below.

Additional Equipment	Cost ($ U.S.)
Juice Heaters (10,800 Square Feet)	433,000
Export Power Generation	
Total Additional Export Power*	741 kW 1,269,611 kWh

* To be added to current expansion plans of 4,550 kW.

The present and proposed new equipment and technical arrangements for Option 1 are shown in Figures 3.2 and 3.3. respectively.[10] Additional exported power would be 741 kW, which is added to the current expansion plans at El Viejo would make total export power at about 5.3 MW. The new arrangement would require an additional 10,800 square feet of juice heater heating surface, having an estimated installed cost of $433,000. Evaporator heating surface is quite adequate in the combined A and B sets as can be seen in Table 3.2

10 The present arrangement is reported to use 1,100 pounds of steam per ton cane hour. The proposed system will use 980.3 pounds. The amount saved, which is 20,948 pounds of steam per operating hour, would not have to pass through the new extraction back pressure turbogenerator and would be used exclusively in the new condensing turbogenerator. This would produce 1,675.0 kW and after deducting the amount that would have been generated in the backpressure extraction unit, a net of 740.6 kW per milling hour would be realized. For 1,714.3 milling hours, 1,269,611 kWh could be exported.

Table 3.2

Required Additional Square Feet Heating Surface

Evaporator Cell	Present A and B Quads	Proposed Quads
a. First Cell (pre-E)	27,775	22,950
b. Second Cell	12,703	8,925
c. Third Cell	10,589	7,525
d. Fourth Cell	11,163	6,210

The results of the financial analysis for Option 1 are shown in Table 3.3,[11] using varying assumptions regarding inclusion or exclusion of the costs for the current power expansion equipment (estimated to cost $1.3 million). As seen in the table, the returns from obtaining an eight year contract are increased significantly over returns from a two year contract. The two-year contract does not pay out the initial equity, much less the accumulated equity deficit, whereas the eight-year contract has no equity deficit accumulation, and the initial equity is easily paid off even at the 25 percent discount rate.

[11] The financial analysis assumes costs for the current expansion plan are sunk and only includes capital costs of $33,000, which means a loan for $346,680 and an equity investment of $86,670.

Table: 3.3

Financial Analysis of Power Production Options for EL VIEJO

Option	Power Export (kW)	Hours of Power Export (hrs/yr)	Kilowatt Hours (kWh) Exported	Capital Cost ('000 $US)	Electricity Revenues 2-Yr Contract ('000 $US)	Electricity Revenues 8-Yr Contract ('000 $US)	Financial NPV 2-Yr Contract ('000 $US)	Financial NPV 8-Yr Contract ('000 $US)
(1) Major Investment- Sunk Investment Plus Evaporator	741	1,714.3 (grinding)	1,269,611	433	Yrs 1-2 75.8 Yrs 3-25 36.3	Yrs 1-8 75.8 Yrs 9-25 36.3	NPV (10%) + 34.1 NPV (15%) + 9.4 NPV (25%) + 4.6	NPV (10%) +176.4 NPV (15%) +122.5 NPV (25%) + 79.2

* The financial analysis includes revenues minus capital equipment costs.
Discount rates are in parentheses.

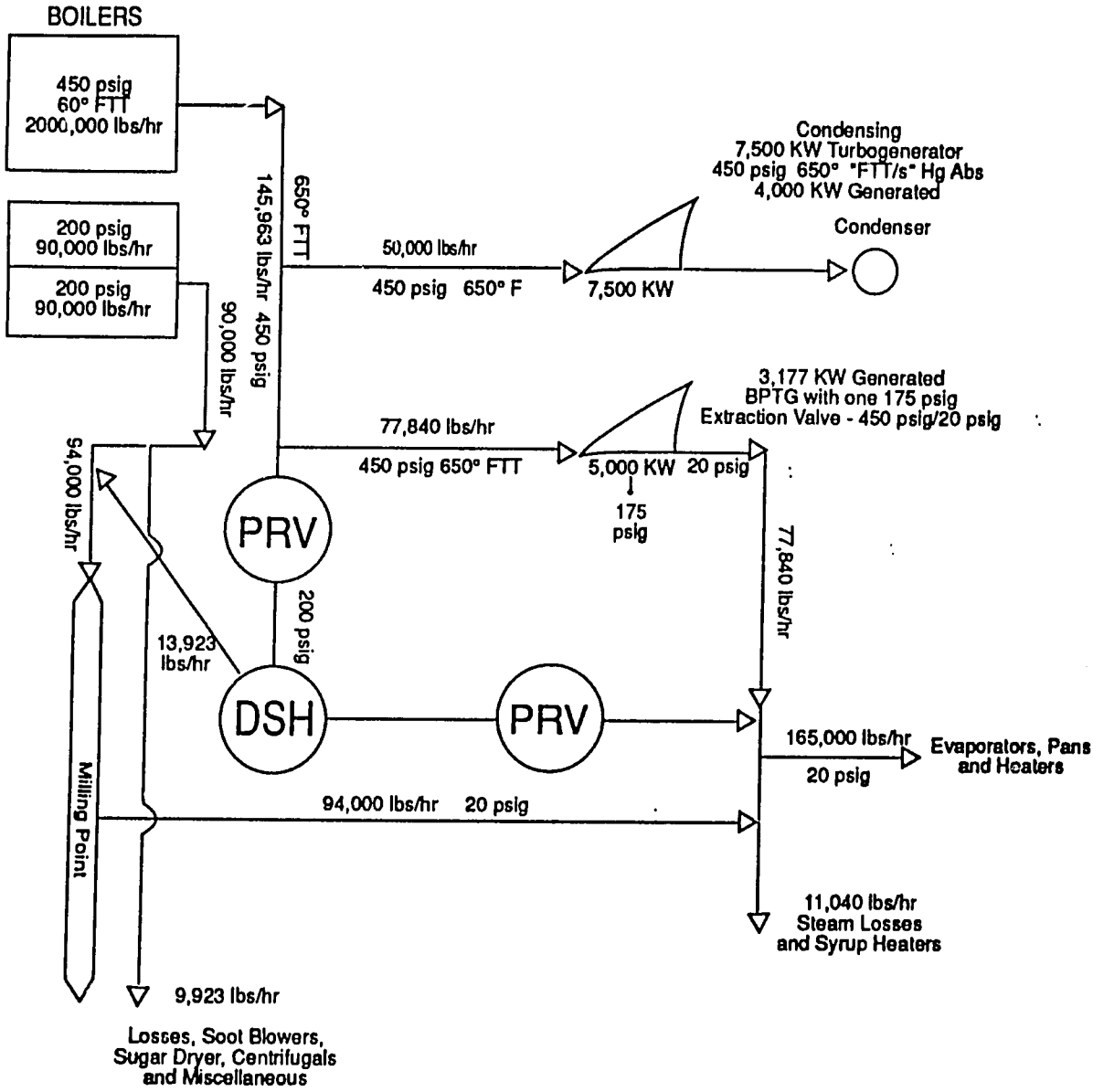

Note:
(1) No exhaust steam (20 psig) has been included for BFW to a temperature higher than the present.
(2) The indicated export power was said to be 4,450 KW. This leaves 2,627 KW for factory (1,200 KW) and outside load (400 KW) plus additional load from new boiler pland and electrification of all F.D. and I.D. fans

EL VIEJO: Proposed Steam and Power Diagram for Grinding Hours for 150 TCH

Figure 3.2

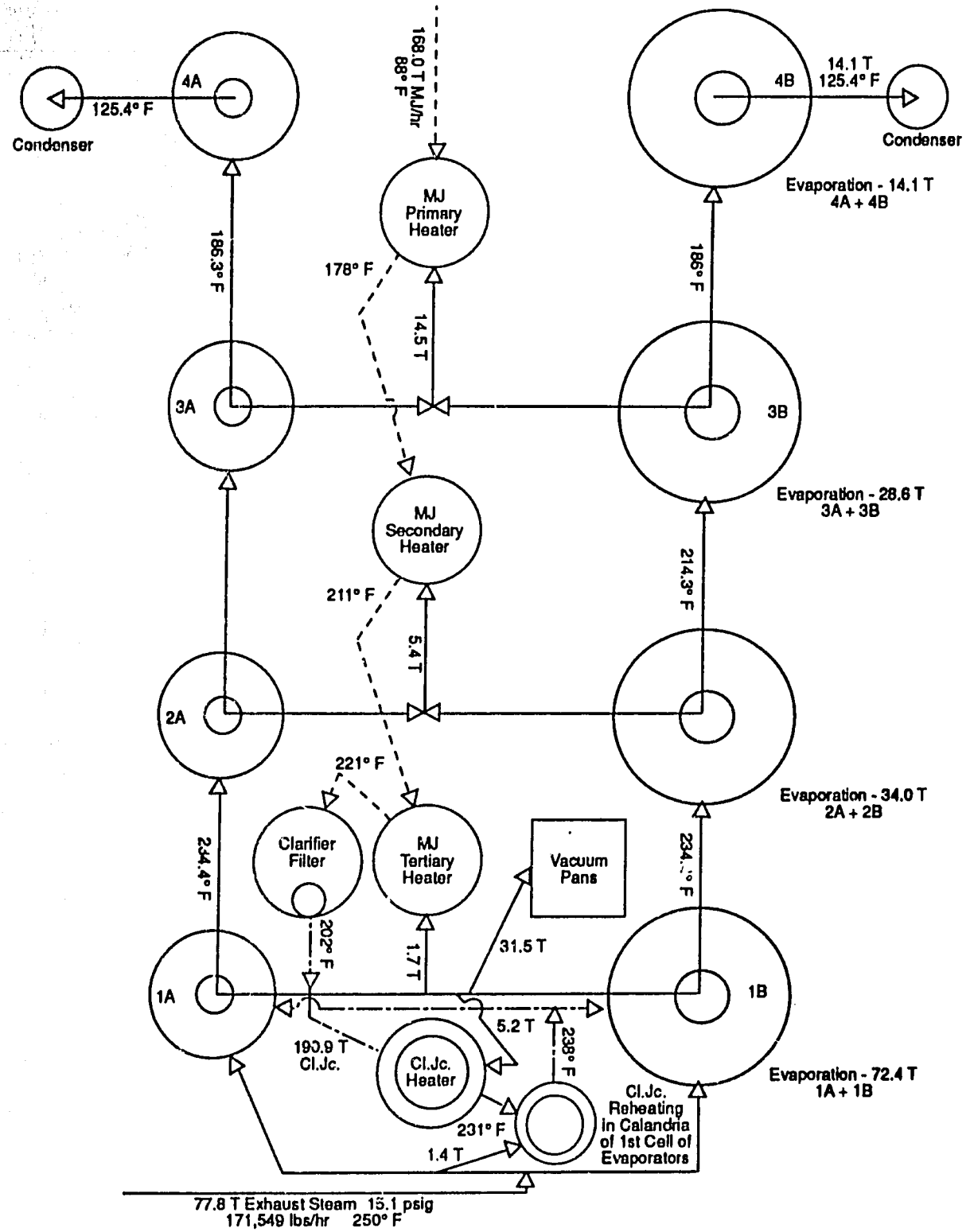

EL VIEJO: Proposed Quadruple Effect for Economical Use of Steam
Figure 3.3

Additional Options

Additional recommendations to be evaluated after the new boiler and turbogenerators are placed in service include:

1. ***Feedwater Deaerating Heater***
   Each 11°F increase in boiler feed water temperature will save approximately 1.0 percent in fuel use. Also, the higher the feedwater temperature the lower the dissolved oxygen content which reduces the risk of boiler tube corrosion. Raising the feedwater temperature from 203°F to 250°F will provide a fuel saving of 4.3 percent. The installed cost of a 200,000 pound per hour unit would probably be $110,000.

2. ***Flue Gas CO_2 Content and Excess Air***
   Attempt to maintain CO_2 in the 12 to 15 percent range; this will provide an excess air content in the flue gas of 72.5 percent down to 38.0 percent. This can be achieved by reducing air leakage into the furnace, boiler and ductwork to a minimum and obtaining good mixing of the overfire air and combustion gases in the suspension firing furnace. If excess air is reduced from 100 percent to 50 percent at 400°F stack temperature, the boiler efficiency can be improved about 10 percent.

3. ***Bagasse Dryer - Economizer***
   Both units use flue gas as the heating medium and the resultant waste heat recovery indirectly provides a higher boiler efficiency. Using both a feedwater deaerating heater and an economizer to heat the boiler feedwater up to 350°F would provide a 12.4 percent saving in fuel used. The installed cost for an economizer installed immediately after the boiler and before the airheater is estimated at $240,000 so that the investment for the two units (deaerating heater and economizer) would approximate $350,000. A rotary drum type bagasse dryer capable of drying the bagasse from 50 percent moisture to 38 percent moisture would probably cost in the area of $850,000 installed. Pneumatic cyclone types being offered by Brazilian and French firms might be less expensive; however, power consumption and abrasion wear of the cyclones and fans would be higher. The Australians are developing a direct fired dryer using dried bagasse fines as a fuel. The unit is still in the developmental stage.

   The economizer - deaerating heater combination is the preferred unit from the standpoint of first cost and maintenance costs while achieving results essentially equal to the bagasse dryer. The one advantage the bagasse dryer has is the capability to improve the combustibility of the bagasse which can sometimes be important when firing high moisture content bagasse in a suspension burning

furnace. Once the actual boiler operating conditions are known, then a study can be made to determine which alternative is most suitable and profitable for El Viejo.

4. ***Shredder for Improved Cane Preparation***
With the new boiler installation, finer cane preparation for better suspension burning of bagasse may be desirable. The Tongaat, Unigrator and Gruendler shredders have all worked well provided they have sufficient power. The Tongaat and Unigrator units need at least 50 to 60 horsepower per tonne fiber hour to produce a prepared cane having an Index of Preparation over 90. Placing this much power in the preparation of the cane will reduce the power requirements of the mills. The ability of the finely prepared cane to better absorb maceration water will improve sucrose extraction and possibly pay for the investment without adding the benefits of lower bagasse moisture and better combustibility of the bagasse. Tongaat Sugar Company of South Africa has licensed firms to fabricate their units and reportedly will license a purchaser of their specifications and drawings to fabricate a unit.

5. ***Steam Traps and Flash Tanks***
Condensate from steam traps should be collected and, where possible, the condensate should be flashed to the next lower pressure steam line for heat of vaporization recovery. Flash tanks, where evaporator elevation permits, should be used on all cells of an evaporator set except the last cell. Boiler blowdown steam should be passed through a flash tank so that flashed portion of the blowdown steam will enter the exhaust steam system after passing through a flash tank installed in the boiler blowdown system. For a 15 Psig exhaust steam system, approximately 30 percent of the blowdown from a 450 Psig boiler can be recovered as exhaust steam. The hot condensate discharge from the blowdown after the flash tank can be used in the boiler feedwater make-up system for additional heat recovery.

Option Recommendation: Advantages and Disadvantages

Until the new boiler, turbogenerators and other additional power equipment are operational and the system's operating characteristics are fully defined, most of the additional options requiring larger capital expenditures on the boiler plant should not be undertaken. Boiler efficiency improvement through the reduction in flue gas excess air content, however, should be an immediate objective.

Option 1, calling for primary, secondary and tertiary heating of mixed and clarified juice with quadruple effect evaporators will provide a substantial increase in power production per tonne of bagasse. Export power per tonne of bagasse would increase from 107.45

kWh to 122.73 kWh per tonne bagasse. While Option 1 is recommended for immediate consideration, a similar quintuple effect evaporator-heater cost should also be evaluated as it will provide a 9 to 11 percent exhaust steam demand reduction over that obtainable from the quadruple effect arrangement.[12]

The only disadvantage of this option is the increase in the amount of equipment requiring periodic cleaning to remove heating surface scale build-up and the additional equipment requiring off-season maintenance work. If the power purchase price schedules are changed and contract lengths are extended beyond 8 years, larger capital investments for additional power sales would become more attractive. Also, after recent discussions with the utility it may be necessary for the mill to pay for connection to the grid, which would cost approximately $200,000. This fixed cost ,which would vary for the different mills considered in each report, would make the make it somewhat less attractive financially.

12 The aforementioned advantage of more exportable power, from either configuration, can be further enhanced by the economic benefits attributable to increasing milling capacity to 175 tons cane per hour, which is the capacity design basis of the quadruple effect option.

CHAPTER 4 TABOGA

Existing Equipment Observations

Taboga has steam and power demands at both its sugar factory and, potentially, its alcohol distillery. Existing plant characteristics and production levels for Taboga are presented in Table 4.1 and Appendix B. Without adding new high pressure boilers (i.e., major capital investment), its ability to produce excess power for sale to the grid is somewhat influenced by the need to use steam and electrical energy for alcohol production. The type of feed stock and the capacity at which the distillery operates will determine the maximum cogeneration power Taboga can export to the public utility system.[13]

Taboga purchased a used 5,000 kW non-condensing turbogenerator to produce more power, which uses 235 Psig steam at 600°FTT and exhausts at 30 Psig.[14] The factory hopes to become self-sufficient in power usage after installing the turbine, even when operating the distillery. Currently, Taboga purchases about 250 kW from the public utility system.

There are five boilers available for use with a total capacity of 265,000 lbs/hour of steam (220 Psig and 572°FTT).[15] Taboga needs to study the performance of their boilers, i.e., steam output and fuel usage efficiency (pounds of steam produced per pound of bagasse burned.). The factory is reported to now have a 227,500 pounds-per-hour demand for high pressure steam. If the two larger boilers are being used to supply this quantity of steam mentioned above they are operating at 120 percent of rating. This will cause higher flue gas temperatures and high unburned carbon losses, all of which reduces boiler efficiency. Perhaps the boiler performance studies will indicate one of the 25,000 lbs/hr boilers should be used continually with the two larger boilers in order to meet the above steam demand while maintaining good boiler efficiencies.

An engineering consulting firm has already advised Taboga that an additional 12,000 square foot evaporator cell is needed as the factory is short of evaporator capacity. The dilemma for Taboga is to determine how best to use this extra capacity in order to obtain the most economical steam usage efficiency in the processing house so as to maximize the reduction of exhaust steam demand.

---

13 When the distillery is operating with "A" molasses or syrup and clarified juice, the exhaust steam demand will be less than when the factory is producing only sugar. This will make more steam or bagasse available for power production.

14 The steam rate is reported to be 24 lbs. per kWh for these conditions. The exhaust range is 5 to 30 Psig. The steam rate appears to be too low and is probably in the 28 to 29 lbs/kWh range if the efficiency of the turbogenerator is in the 69% to 71% range.

15 Two boilers, capacities 140,000 and 50,000 lbs/hour, are normally used. At times, one of the other 25,000 lbs/hour boilers is used when additional steam or combustion capacity is needed.

Table 4.1

TABOGA
PLANT/FACTORY DATA
(Production Statistics 1989)

319,652	TC/YR: Note: 1988 TC/YR = 374,412
174	TC/Hr Avg. Production Rates
233	Gross Production Hours/Yr (97 days/yr)
1,833	Net Production Hours/Yr (76 days/yr)
—	Hours - Scheduled Holidays Excluded from Gross
495	Hours - Lost Time (21% of gross)
79%	Grind Time Eff., Overall, Net/Gross (6% no cane)
84%	Grind Time Eff. Factory Percentage Available Grinding Time (Prod. Hrs. No Cane hrs.)
8,219	Tonnes Raw Sugar/yr
23,764	Tonnes White Sugar/yr
31.983	Tonnes Total Sugar/yr
10	TC/TS
—	Gal or Liters Alcohol
10,093	Other Products, Final Molasses, TM
—	Other Products
104,065	Tonnes Bagasse
49	Bagasse Moisture (percent mcwb)
3	Pol Bagasse
34	Imb percent Cane
15	Mixed Juice Bx
79	Mixed Juice Pty
15	Cane Juice Bx
80	Cane Juice Pty
61	Syrup Bx
3,006	kWh Generated/Hour Grinding, Avg.
3,000±	Tonnes/Yr Surplus Bagasse
3	Surplus as percent Total Bagasse
101	Mixed Juice percent Cane

Export Power Options

Two options are suggested for Taboga (Table 4.2), with the underlying assumption that the mill will not make major higher pressure boiler purchases due to the high capital costs and current purchase power pricing conditions. Under these conditions, Taboga will need to become far more efficient in conserving steam use and may need to make tradeoffs concerning the marginal returns from selling alcohol to the international market or export power to the national utility. Summary data for Options 1 and 2 are presented in Table 4.2, with each option discussed below.

Option 1: Planned Minimum Investment: A 5,000 kW Turbogenerator

Cane Production

- Hourly (Tonnes cane per hour)	180
- Daily (Tonnes cane per day)	3,350
- Total Production (tonnes cane milled 1988-89)	347,000
c. Grinding hours	1,928
d. Lost-time hours	565
e. Evaporation per hour (15.1 to 65 brix)	
120% - Clarified Juice on Cane (tonnes)	166

Additional Equipment	Cost ($US)
Interconnection Switchgear (See CATSA pg. 23 for details)	92,000
Export Power Generation	1,500 kW (Downtime Hrs) 710 kW (Grinding Hrs) 2.231,360 kWh

Option 1 presents the minimum changes at the factory, whereby Taboga installs its additional 5,000 kW turbogenerator and transformer. The latter are considered sunk costs and makes minor adjustments in running the factory and distillery more efficiently. The steam and power demand for the factory are shown in Table 4.3 for Option 1. The factory and outside power load plus the distillery power demand is estimated at 2,674 kW. This would leave a surplus kilowatt amount of 719 kW from the 3,392 kW generated during the grinding hours or a total of 1,384,160 kWh that could be exported.[16]

16 Bagasse production is 60.32 tons per hour and the bagasse at 49.2% moisture content and a pol of 3.07% has a HHV of 4,061 BTU per pound. One pound of bagasse is said to produce two pounds of steam. For 222,755 pounds per hour of high pressure steam, 111,378 pounds (50.51 tons) of bagasse will be required per grinding hour. After allowing for filter bagacillo, a surplus of 8.6 tons per grinding hour will exist or a total of 16,579 tons. If 30% of the normal bagasse fuel demand is required during lost-time hours, the surplus fuel demand would be 15.15 tons of bagasse per lost-time hour or a total of 8,558 (15.15 x 564.8) tonnes. This amount of bagasse would produce 937 kW of surplus power which is sufficient to meet the demand of the stopped factory and the distillery operating at half capacity.

Table 4.2

Financial Analysis for Power Production for TABOGA

Option	Power Export (kW)	Hours of Power Exported (hrs/yr)	Kilowatt Hours (kWh) Exported	Capital Cost ('000 $US)	Electricity Revenues 2-Yr Contract ('000 $US)	Electricity Revenues 8-Yr Contract ('000 $US)	Financial NPV 2-Yr Contract ('000 $US)	Financial NPV 8-Yr Contract ('000 $US)
(1) Minimum Investment	1,500 719	564.8 (downtime) 1,927.8 (grinding)	2,231,360	80	Yrs 1-2 133.2 Yrs 3-25 63.9	Would not get 8-yr contract	Paid off yr 1.	Too small for 8-year contract
(2) Major Investment	4,315 3,457	564.8 (downtime) 1,927.8 (grinding)	9,101,517	2,321	Yrs 1-2 543.4 Yrs 3-25 260.8	Yrs 1-8 543.4 Yrs 9-25 260.8	NPV (10%) + 909 NPV (15%) + 595 NPV (25%) + 391	NPV (10%) + 1,926 NPV (15%) + 1,404 NPV (25%) + 925

Table 4.3

Steam Demand and Export Power Potential for Taboga Option 1

Steam/Power Demand	Units
Steam	lbs/hr
I. High Pressure Steam Demand (220 Psig, 572°FTT)	
1. Milling Plant	89,500
2. Boiler Plant	30,800
3. the Factory Uses	5,750
4. Radiation, Steam Traps Losses	2,406
5. Power House (3,392 kW)	94,299
Total	222,755
II. Exhaust Steam (15 Psig) Available and Used	
1. Evaporators	198,000
2. Syrup Heaters	4,800
3. Boiler Feedwater Steam Injection	3,000
4. Leaks and Radiation Losses (4.1%)	8,799
Total	214,599
Power	**Kilowatts**
I. Power Generated	3,392
II. Factory, Distillery and Outside Power Load (Demand during grinding)	2,674
III. Available Export Power (during grinding)	719
IV. Available Export Power (during down time)	1,500

The remaining surplus bagasse available for storage or additional power production would be 8,021 tonnes (16,579 - 8,558 tonnes). Using the evaporator set operating on water as a steam condenser, a portion of the additional bagasse could be used to generate 1,500 kW of export power during the lost-time hours. This is said to be the capacity limit of the existing utility power line supplying Taboga. To generate this power approximately 5,667 tonnes of bagasse would be required. This would leave 2,354 tonnes to be baled for storage and later used for off-season distillery use. The total lost-time power generation would amount to 847,200 kWh (1,500 x 564.8 kWh). Thus a total of 2,231,360 kWh (1,384,160 + 847,200 kWh) could be delivered to the grid.[17]

[17] An exhaust steam pressure of 15.0 Psig is indicated because the existing turbines will use about 8% less steam at this pressure when compared to the demand of a 20 Psig system. When the distillery is drawing its feedstock from the clarified juice, syrup and A-molasses, the distillery steam requirement will generally be offset by the reduction in sugar factory steam demand.

The capital cost for a minimum investment would amount to $92,000 for ICE interconnection electrical switchgear. This assumes the turbogenerator (5,000 kW), electrical switchgear for internal factory power distribution and 1,500 kW transformer are already purchased (i.e., sunk costs) and in place. The estimated revenue for each of the first two years would be $133,216 and thereafter $63,944, assuming a two-year contract is signed. The investment would be paid off in the first year.

Option 2: Additional Power Options for Maximum Export Power Using Three Boilers

Export Power Production	Power (Kilowatt hours)
1. Grinding hours - (3457 kW x 1927.8 hr)	6,664,405k
2. Downtime hours - (4315 kW x 564.8 hr)	2,437,112
Annual Total	9,101,517

In this option, new juice heaters, evaporators, and boiler instrumentation are added to Taboga to increase total export power potential up to 3,457 kW (Grinding Hours) and 4,315 kW (Downtime Hours.) (Table 4.2, Figures 4.1 and 4.2). The equipment and estimated installed costs for Option 2 are given in Table 4.4. It is assumed that all surplus bagasse at Taboga will be burned during the lost time period of the factory. An analysis was made of burning all surplus bagasse, not needed for the lost time period during the off-season. The off-season option was not financially attractive due to baling, storage and bale breaking costs of the required off-season bagasse. The assumption is made in this option that ICE will increase the capacity of their power line at no cost to Taboga from 1,500 kW to 5,000 kW.

Table 4.4

Equipment and Estimated Installed Costs for Option 2*

	Equipment	Square Feet (ft^2)	Costs ($US)
1.	Juice Heaters** (Total Cost)		566,000
	a. First Stage Heating (MJ) Vapor Required 14.9 tonnes	4,938	
	b. Second Stage Heating (MJ) Vapor Required at 5.6 tonnes	3,468	
	c. Third Stage Heating (MJ) Vapor Required 4.3 tonnes	3,208	
	d. First Reheating (CJ) Vapor Required 3.6 ton	2,933	
	e. Second Reheating (CJ) Vapor Required 3.2 tonnes	4,191	
	f. Third Reheating (CJ) Exhaust Steam Required 1.5 tonnes	1,268	
2.	Quintuple Effect Evaporator***		326,000
	a. First Cell	24,786	
	b. Second Cell	12,711	
	c. Third Cell	10,599	
	d. Fourth Cell	8,804	
	e. Fifth Cell	4,683	
3.	Condensing Turbogenerator 3,750 kW, 2,400 VAC, 220 Psig, 573 FTT/3" Hg Abs.		850,000
	Freight, Duty and Installation		213,000
4.	Internal Electrical Switchgear (generator to power export transformers) and Turbogenerator Control Panel which includes items indicated in Appendix D such as Disconnect Switches, Main Circuit Breakers, PT's and CT's for Instruments and Relays, Locking Relay, Under Frequency Relay, Under Voltage Relay, Instantaneous Time Delay - Phase Balance Relays, Generator Voltage and Frequency Meters plus a complete shared Synchronization Panel.		101,000
	Freight, Duty and Installation		32,000
5.	Transformer (Rebuilt) and Internal Protection 2,400 VAC Delta to 24.9 KV Wye, 5,500 KVA		55,000
	Freight, Duty and Installation		14,000
6.	Interconnection (transformer high side to public utility line) which includes Lightning Arrestors and Grounding Protection, Metering, Outdoor Switch (fused) and Disconnect Switch (not fused)		28,000
	Freight Duty and Installation		7,000

* Assumes interconnection expenditures made for Option 1.

** Seven heaters totalling 16,399 square feet would be added to the existing heaters which would allow spares for cleaning during operations.

*** With 47,500 square feet available an additional 17,000 square feet would have to be installed.

Table 4.4

Equipment and Estimated Installed Costs for Option 2 (cont'd)

Equipment		Square Feet (ft^2)	Costs ($US)
7.	Electrical Costs Contingency		52,000
8.	Boiler Instrumentation (see Appendices C and D)		18,000
9.	Bagasse Feeders (see Appendix C)		59,000
	Total Option 2 Costs		2,321,000

Converting the present quadruple effect evaporators to a quintuple effect set using primary, secondary and tertiary heating of the mixed and clarified juices will provide a steam usage reduction of 181.2 pounds per tonne cane hour. Presently the use is estimated at 1,100 pounds of steam per ton cane hour while the quintuple would use 918.8 pounds of steam.[18] Table 4.4 presents the equipment specifications for the proposed capital purchases.

The financial analysis for Option 2 (assuming no additional operations and maintenance costs and the previous loan terms) is given in Table 4.2.[19] Going from a two to eight year contract almost doubles the financial returns.

Taboga also should take the same heat conservation measures recommended for the other factories. All evaporator cells should flash their condensate to the following cells. The CO_2 readings on the boiler flue gas should be above 12 percent. This can be accomplished by minimizing air leaks into the boilers, furnaces and flue gas ducts and by installing rotary bagasse feeders.

---

18 Normal design parameters were used in calculating evaporation and heating requirements in that mixed juice heated percent cane was assumed to be 110% and clarified juice 120% on cane. The later assumes 9% dilution by the filters. Figures 4.1 and 4.2 indicate the steam balance for the factory and for the quintuple effect evaporators. Factory data indicate lower values for both juices, both being around 100% and 98% respectively. Apparently the filter dilution is offset by extensive vapor loss from the heated mixed juice when it passes through the clarifier flash tank. An adequate safety margin exists for changes in operating conditions such as increase in maceration and filter washing so as to reduce sugar losses. This margin plus the use of a factor in the Dessin formula for heavy scale formation in the first and last evaporator cells allows adequate heating surface for the juice heaters and evaporator cells.

19 The electricity revenues for a 2-Year contract and 8-year contract are shown in the table. They were calculated as follows:
a. Years 1 and 2 (9,101,517 x .059706) $543,3751
b. Years 3 to 25 (9,101,517 x .0286568) $260,820
The loan conditions are as follows: a) concessionary interest rate of 11%, b) Debt/Equity ratio of 4/1, c) a $1,608 800 loan with $401,200 equity, and d) a grace period for the first two operating years.

Bagasse drying would not be economical at present capital and operating costs for bagasse dryers, given the current power purchase pricing schedule. The installed cost for a rotary drum dryer at Taboga would be in the $800,000 to $900,000 range. Cyclone type dryers may be less expensive, but their maintenance and power costs would be higher than for the drum type. Use of an airheater - economizer combination can provide the same boiler efficiency improvement realizable with bagasse drying and at a lower capital cost. Taboga would not obtain the improved bagasse combustibility benefits obtained with bagasse drying, as their type of furnaces do not benefit sufficiently from this feature to warrant the additional capital cost.

Option Recommendation: Advantages/Disadvantages

As an initial and preliminary cogeneration step, Taboga should select the minimum investment option. However, the ultimate objective would be to rapidly reach the maximum export power/major investment level of production (79.87 kWh/tonne bagasse) rather than remain with the minimum investment production (19.58 kWh/tonne bagasse). The advantage of following this incremental course of action would be that revenue is earned and power sale experience gained while equipment for the major investment is located, purchased and installed. In addition, the factory could be improving boiler efficiency and determining more exactly how the new 5,000 kW turbogenerator power output will affect the steam and power systems of the sugar factory and distillery.

When Taboga's export power potential per tonne of bagasse is compared to that for CATSA and El Palmar, 56.07 kWh and 51.23 kWh respectively, one can see the benefit of Taboga having more surplus bagasse available per grinding and downtime hour. This allows Taboga to produce more excess high pressure steam for use in the efficient condensing turbogenerator and through the use of a more efficient BPTG.

While the minimum investment will provide an excellent payback, the major investment option will provide considerably more revenue and power particularly under an eight year power contract. These NPV values are approximately double those shown above in the power and financial section for a two year non-new facility contract.

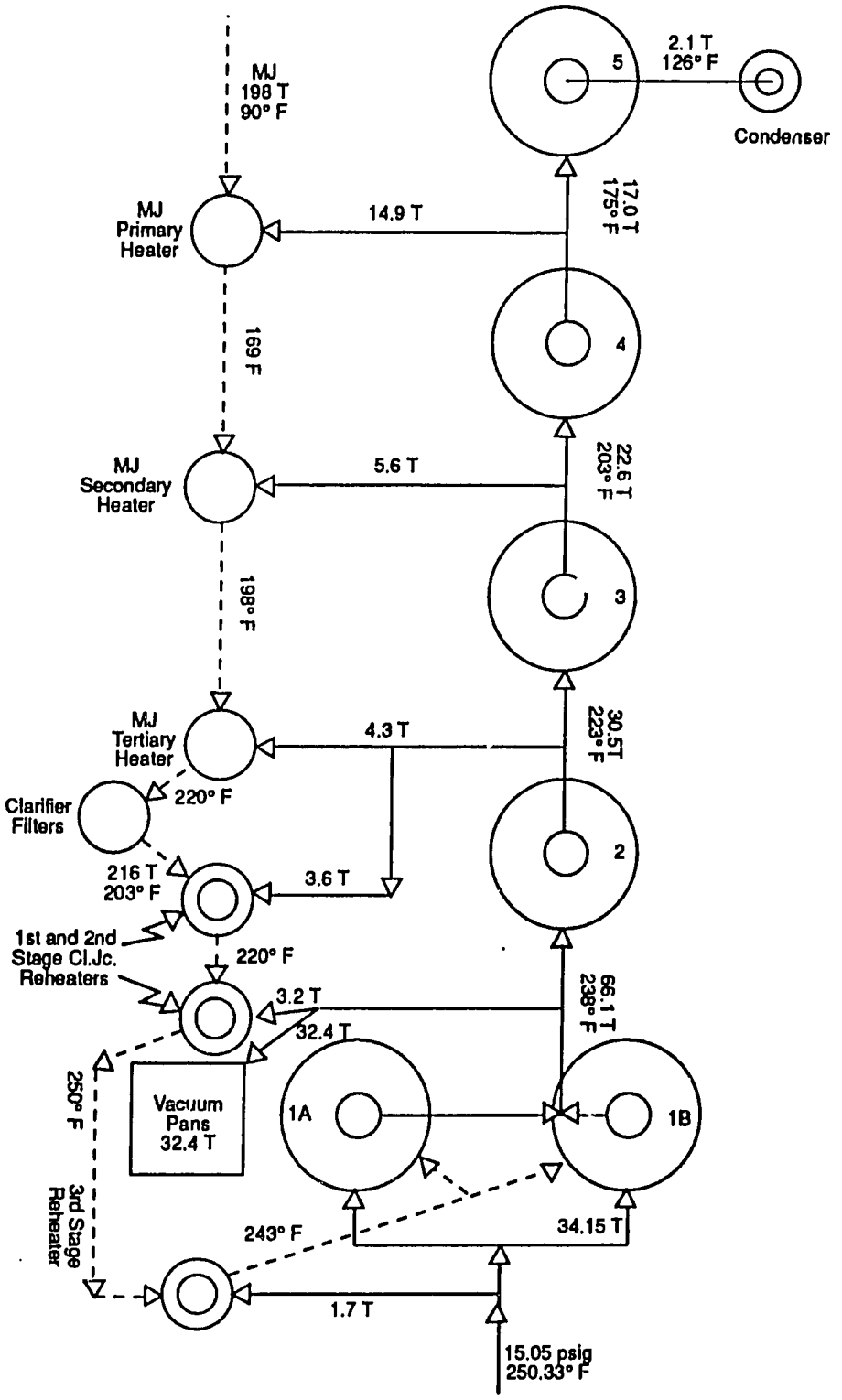

TABOGA: Steam and Power System for Proposed Quintuple Effect Evaporators
Figure 4.1

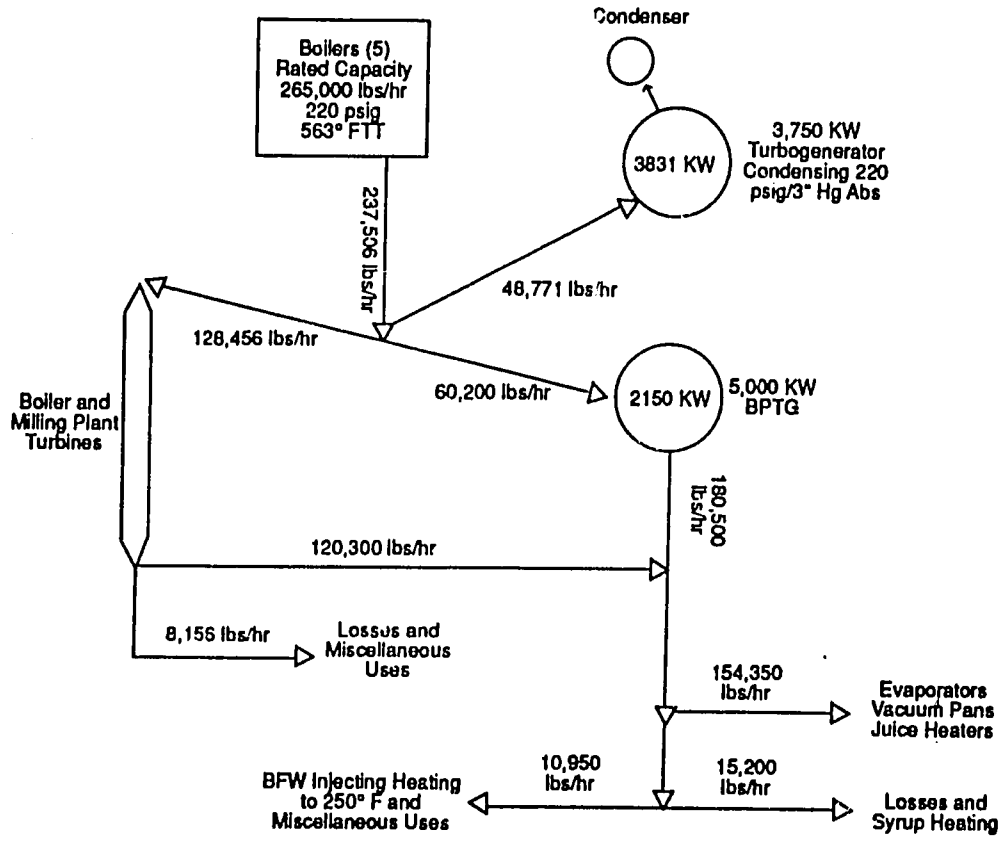

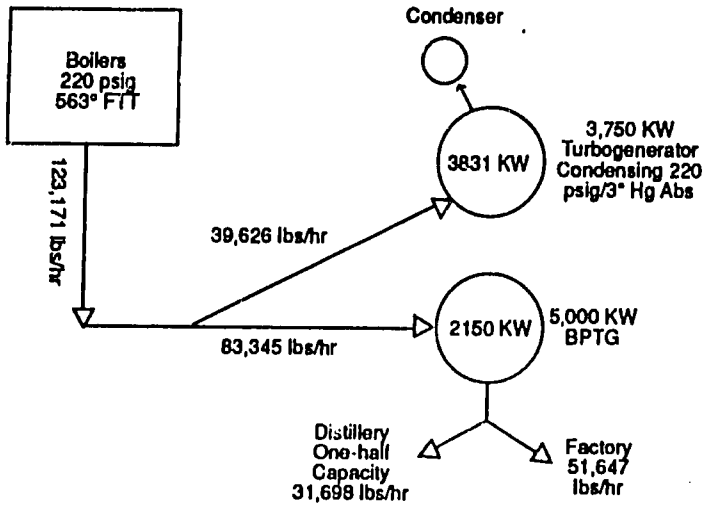

TABOGA: Steam and Power System for Maximum Power Export Using 3,750 kW Condensing Turbogenerator and Quintuple Effect Evaporator Set - 180 TCH

Figure 4.2

CHAPTER 5 EL PALMAR

Existing Equipment Observations

General production and factory characteristics for the El Palmar sugarcane mill are shown in Table 5.1 and Appendix B. One constraint on the factory is that the boiler capacity (162,500 pounds per hour rated capacity, 175 Psig) is limited when milling 140 TCH. The factory has to study the performance of their boilers to determine if they are obtaining the maximum capacity attainable for each boiler.

There are four generators at El Palmar with a total capacity of 7,500 kW. Only two units are used, the 3,000 kW and 1,500 kW units. The factory purchases 800 to 900 kW from ICE The factory power demand is about 29.4 kW per tonne cane hour or 4,116 kW and the generation is 23.0 kW per tonne cane hour or 3,224 kW. The inability to be self-sufficient in power is caused principally by the high steam consumption rates of their turbogenerators, although they also have a limitation on steam generating capacity.

The El Palmar milling plant is electrically driven with constant speed motors. There are three sets of motor driven cane knives and the cane preparation is said to be quite good. One problem is their inability to slow down the mills when operating at reduced milling rates. Operating the mills partially loaded with cane, undoubtedly, adversely affects mill extraction and bagasse moisture.

The factory had to operate at a reduced rate during the 1989 zafra when producing white sugar. They are installing a new pan in order to increase the pan floor capacity. Until they solve their boiling house and steam generation limitation problems, they will not be in a position to consider power exports; however, they should be able to eliminate power grid purchases.

Steam and mass balances at El Palmar need to be worked out for raw and white sugar production. Particular attention will have to be paid to possible excess dilution on the centrifugal station and on the pan floor. Evaporator capacity and extra use of steam in the processing house should also be studied. Some of these points will be explored in this

Table 5.1

EL PALMAR
PLANT/FACTORY DATA
(Production Statistics 1987)

279,014	TC/YR
136	TC/Hr Avg. Production Rates
2,403	Gross Production Hours/Yr (100 days/yr)
2,049	Net Production Hours/Yr (85 days yr)
125	Hours - Easter and Holidays (5 days not included in gross)
354	Hours - Lost Time (15% of gross)
85%	Grind Time Eff., Net/Gross (5% no cane)
90%	Grind Time Eff. Factory Percentage Available Grinding Time
29,960	Tonnes Raw Sugar/yr
—	Tonnes White Sugar/yr
29,960	Tonnes Total Sugar/yr
9	TC/TS
—	Gal or Liters Alcohol
10,542	Final Molasses, 85 Bx
—	Other Products
98,163	Tonnes Bagasse
54	Bagasse Moisture (percent mcwb)
4	Pol Bagasse
24	Imb/Cane
14	Mixed Juice Bx
76	Mixed Juice Pty
15	Cane Juice Bx
77	Cane Juice Pty
64	Syrup Bx
3,074	kWh Generated/Hour Grinding, Avg.
89	Mixed Juice percent Cane

study. Due to several technical problems, El Palmar presently has no appreciable quantity of surplus bagasse; although reported fuel oil usage is quite low.[20]

With the new 20,000 square foot pre-evaporator the mill is installing and assuming the present juice heater configuration and other factory operating conditions, Figure 5.1 indicates the potential steam and power production.[21] Under this configuration, a bagasse surplus of 28,276 pounds (13.5 tonnes) per lost-time hour or 9,977 tonnes is produced annually. The hourly surplus is not large, 3.7 tonnes, when spread over the total crop hours. Higher unburned carbon losses than estimated, or lower CO_2 readings and low bagasse heat value could absorb this surplus quite rapidly. Higher vacuum pan steam consumption, more than 20 percent on cane, due to high dilution at the centrifugals or lower syrup brix could also adversely affect this surplus. The steam required for 4,200 kW (factory and outside demand) is estimated at 154,350 pounds per hour or 36.75 pounds steam per kilowatt hour. El Palmar will probably not be required to purchase power next year if the proposed operating conditions are attained.

Export Power Options

Given its current plant configuration, El Palmar has a low boiler capacity problem. On the basis of pounds of steam capacity per tonne cane hour, El Palmar has only 1,160 lbs/TCH in contrast to CATSA (2,056 lbs/TCH), El Viejo (1,667 lbs/TCH), and Taboga (1,472 lbs/TCH). This limitation does not permit El Palmar to burn surplus bagasse during the grinding hours to generate export electricity under present conditions.
The demand for exhaust steam and high pressure steam must first be reduced before surplus bagasse and the resultant steam can be used to generate sufficient electrical energy to export power. This can be accomplished by decreasing both the exhaust steam

---

20 The factory has a very high bagasse production percent cane. Some of this high value can be attributed to high bagasse moisture (52 to 53%) and soluble solids which causes a low 43% fiber in bagasse. Consequently, the HHV of the bagasse is 3,883 BTU per pound of bagasse which is quite low. At 140 tons cane per hour, bagasse production is 110,823 pounds per hour. The CO_2 reading on the boiler flue gas is reported to be 8.0% or 158.8% excess air and the flue gas temperature exiting the airheater is reported to average 402°F. Even with the good flue gas temperature, the efficiency of the boiler is estimated at 55.7% and the ratio of pounds of steam per pound of bagasse is 1.98. By using air seal feeders (see Appendix A) and minimizing air leaks into the furnace setting, through the ash removal doors and the flue gas ductwork, the CO_2 reading could probably be increased to 12.0% and the excess air reduced to 72.5%. This would increase steam production to 2.19 pounds per pound of bagasse for a 9.3% saving in bagasse fuel. If the 8.0% CO_2 value is representative of average operations, the surplus bagasse for the annual cane tonnage could be increased to a figure in excess of 8,600 tons by reducing the excess air to 72.5%

21 Steam requirement is estimated at 168,463 pounds per hour and bagasse at 85,082 pounds per hour. Since average bagasse production is 110,823 pounds per hour, this would leave 23,525 pounds per grinding hour for downtime use and surplus (110,823 x .98 - 85,082). When lost time is 778 hours, 58,087 pounds of bagasse per lost- time hour would be available. Downtime steam requirements, at 35% of grinding time steam, would be 59,025 pounds per hour and bagasse demand would be 29,811 pounds.

requirements of the juice heater-evaporator-vacuum pan units and the high pressure steam requirements of power plant turbogenerators.

The proposed primary, secondary and tertiary system of heating mixed juice and clarified juice and boiling vacuum pans on vapor is seen in Figure 5.2 and Table 5.2, which reduces high pressure steam demand from 168,463 pounds per hour to 147,736 pounds per hour. Assuming the boilers will operate at the 168,463 pound capacity (103 percent of rated capacity), the difference of 20,727 pounds per hour can be used to generate 1,500 kW of power in a high pressure condensing turbogenerator for net export of 1,099 kW per grinding hour.[22]

Table 5.2

El Palmar Option 1 Equipment Specifications*

Equipment		
A. Heaters**		
a. Primary Heater -	6,222 sq. ft.,	13.3 T Vapor
b. Secondary Heater -	4,385 sq. ft.,	4.7 T Vapor
c. Tertiary Heater -	1,709 sq. ft.,	1.5 T Vapor
d. First Reheater Cl Jc -	2,824 sq. ft.,	4.0 T Vapor
e. Second Reheater Cl Jc -	571 sq. ft.,	1.0 T Exhaust Steam
B. Evaporators*		
a. First Cell (Pre Evap.)-	16,579 sq. ft.	
b. Second Cell-	6,401 sq. ft.	
c. Third Cell-	5,638 sq. ft.	
d. Fourth Cell-	3,527 sq. ft.	

* See Figure 5.2 for details on heater and evaporator operating conditions.

** Additional evaporator heating surface required is 2,700 sq. ft. and additional heating surface required for juice heaters is 16,200 sq. ft.

22 Bagasse required per grinding hour would be 36.5 tonnes which would leave 12.8 tonnes of surplus bagasse per grinding hour for lost time and off-season power generation. This would amount to a total bagasse available in grinding hours of 24,589 tonnes. All of the grinding hours surplus bagasse could be burned during the downtime hours at a rate of 31.6 tonnes of bagasse per hour with a steam equivalent of 146,324 pounds per hour. This rate is well within the capacity of the boilers.

Table 5.3

EL PALMAR
EXPORT POWER WITH NEW 1500 KILOWATT HIGH PRESSURE CONDENSING TURBOGENERATOR AND EVAPORATORS - JUICE HEATING - VACUUM PAN VAPOR USAGE SYSTEM

POWER GENERATION:

A. Production, Demand and Export Potential during Grinding Hours (1921 hrs/season)

1. Back Pressure TG's	3,837 kW
2. Cond. TG	1,500 kW
Total Production	5,337 kW
3. Power Demand	4,200 kW
4. Export Potential	1,137 kW
	2,184,000 kWh

B. Lost Time Hours (778)

1. Back Pressure TG's	2,814 kW
2. Cond. TG	1,500 kW
Total Production	4,314 kW
3. Power Demand	1,260 kW
4. Export Potential	3,054 kW
	2,376,012 kWh

C. Off-Season Hours (736)

1. Cond. TG	1,500 kW
2. Power Demand	840 kW
3. Export Potential	660 kW
	485,851 kWh

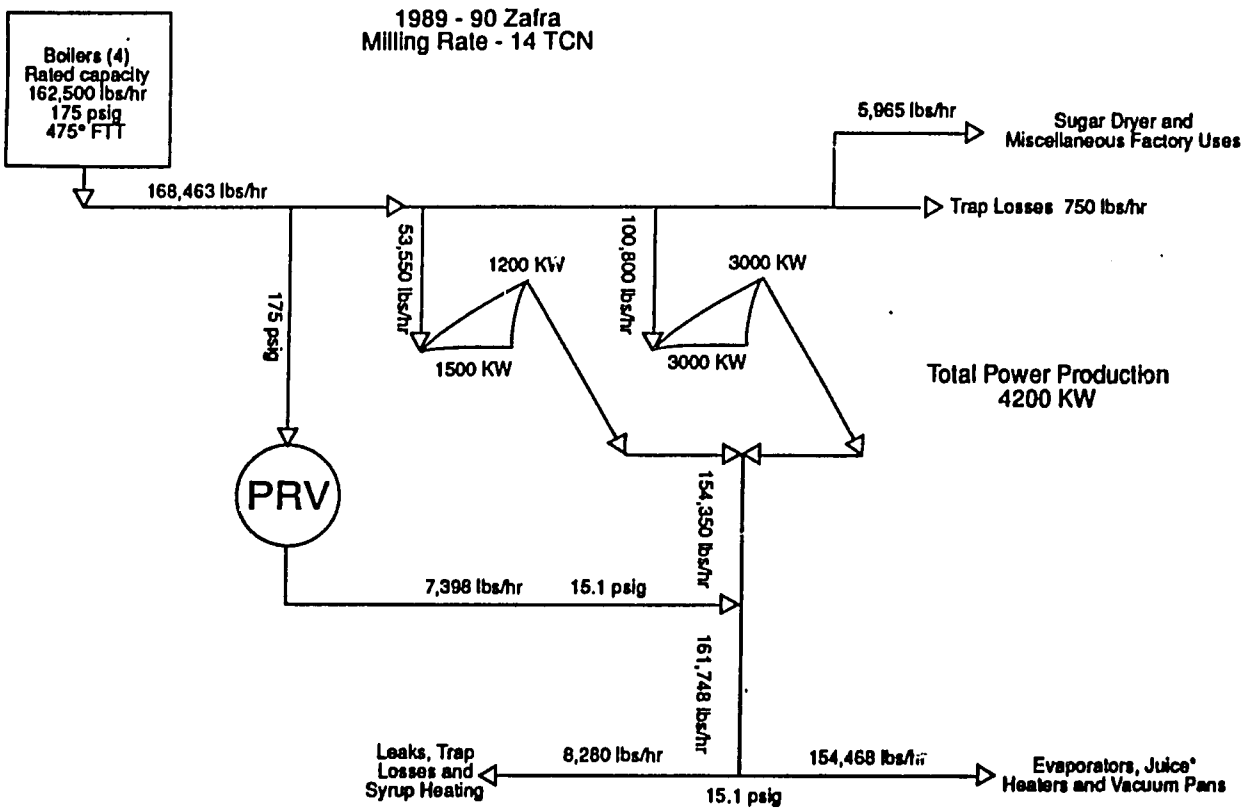

*Assumes: Completion of the installation of the new vacuum pan and 20,000 sq. ft. pre-evaporator capacity

EL PALMAR: Potential Steam and Power Production
Figure 5.1

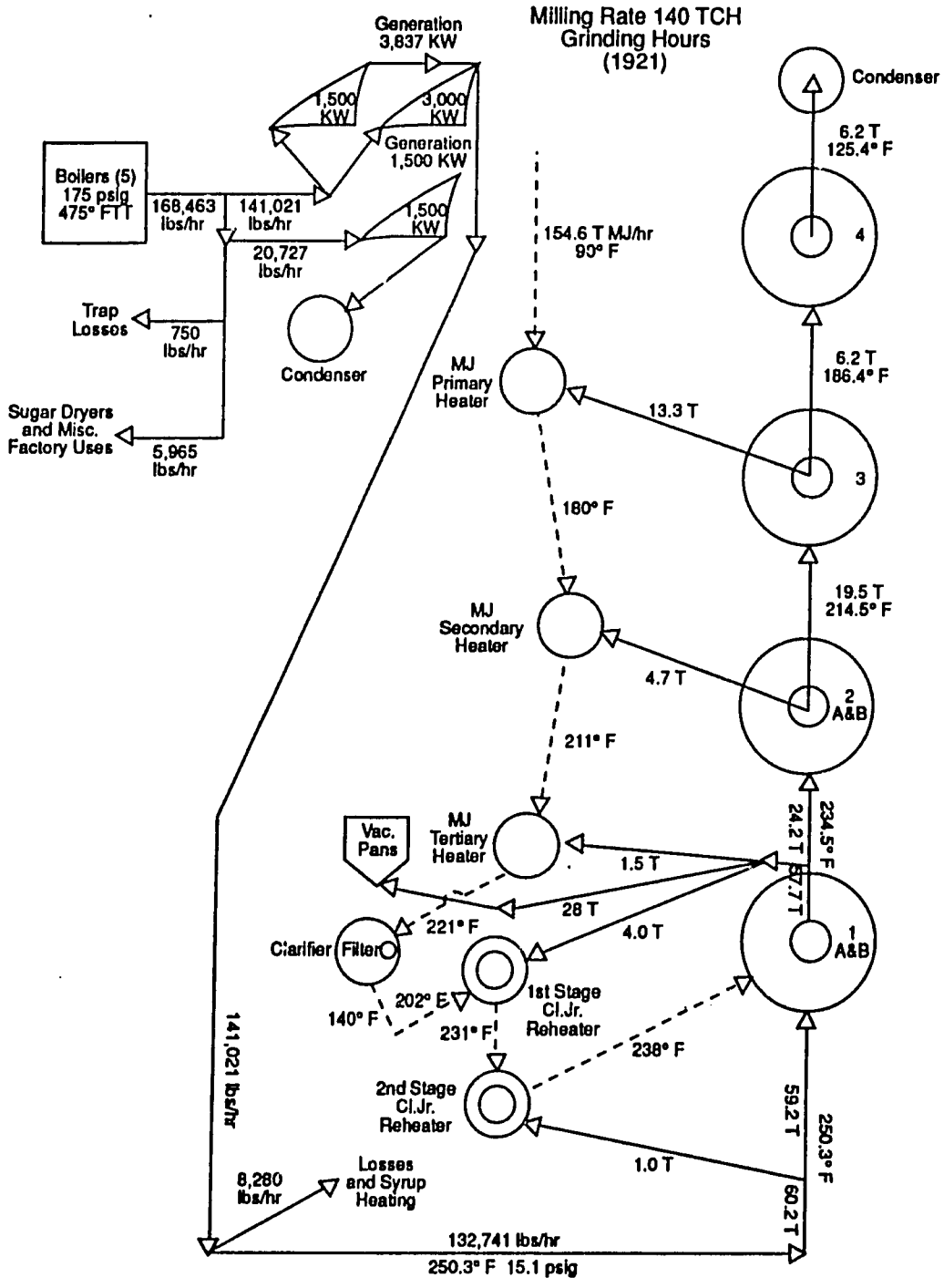

EL PALMAR: Export Power with New 1500 kW High Pressure Condensing Turbogenerator and Evaporator - Juice Heating - Vacuum Pan Vapor Usage System

Figure 5.2

The problem is that out of total power production generated at El Palmar under present conditions (4,314 kW generated), roughly 65 percent is generated by high steam rate back pressure turbogenerators. For this reason it may be desirable to store and use 25 percent of the surplus bagasse during the off-season when all of the generating can be carried out on the more efficient 1,500 kW condensing turbogenerator.[23] See Table 5.3 for the export potential for the three periods i.e. Grinding Hours, Lost Time Hours, and Off-Season Hours.

If ICE is seeking more power during the harvest season, they should possibly consider flexible pricing arrangements when new equipment can be purchased to significantly increase power exports and it is not economical for the sugar mill to do so under the present energy pricing schedule. For example, during lost-time hours it is estimated that El Palmar would export 3,054 kW. For the same amount of steam (125,806 pounds per hour) using 5,000 kW of condensing turbogenerator capacity, an additional 2,274 kW could be exported for a total of 5,328 kW. This is equivalent to 4,145,184 kWh versus the 2,376,012 kWh estimated using the proposed 1,500 kW condensing unit and El Palmar's existing BPTG's. Under the presently proposed power generation configuration, they would be unable to use very much of the 5,000 kW capacity above 1,500 kW during the grinding hours because of steam capacity limitations. Thus, the additional revenue power emanates solely from the limited hours of the Lost Time period and, therefor, is not economical for the sugar mill but possibly desirable additional power from ICE's viewpoint.

Export Power: Option 1

While El Palmar could export some power for a minimum investment of $80,000 for the interconnection electrical instrumentation, the previous section showed they could only deliver export power during the downtime hours. This would not be a significant amount as such delivery of export power would be similar to CATSA's, but adjusted for the ratio in milling rates. The recommended option (Option 1) would be as indicated below, which involves more substantive changes at the factory short of adding new boilers. Table 5.2, along with the following data, presents the power and financial characteristics of this option.

---

23 If an efficient (e.g. 15.0 pounds of steam per kWh) lower cost used 2,000 to 3,000 kW condensing turbogenerator can be located such a unit should be purchased and installed at the plant in place of the proposed 1,500 kW condensing turbogenerator. Such a unit could eliminate the need for off-season power production.

Additional Equipment	Cost ($ US)
1. Condensing Turbogenerator 1500 kW, 2400 VAC, 175 Psig, 460°FFT/3" Hg Abs.	560,000
Freight, Duty and Installation	139,000
2. Internal Electrical Switchgear (generator to power export transformers) and Turbogenerator Control Panel which includes items indicated in Appendix D such as Disconnect Switches, Main Circuit Breakers, PT's and CT's for Instruments and Relays, Locking Relay, Under Frequency Relay, Under Voltage Relay, Instantaneous Time Delay - Phase Balance Relays, Generator Voltage and Frequency Meters plus a complete shared Synchronization Panel.	76,000
Freight, Duty and Installation	19,000
3. Transformer (Rebuilt) and Internal Protection 2,400 VAC Delta to 34.5 KV Wye, 2,000 KVA.	28,000
Freight, Duty and Installation	12,000
4. Interconnection (transformer high side to Public Utility line) which includes Lightning Arrestors and Grounding Protection, Metering, Outdoor Switch (fused) and Disconnect Switch (not fused.)	28,000
Freight, Duty and Installation	7,000
5. Electrical Costs Contingency	29,000
6. Boiler Instrumentation (see Appendices C and D)	15,000
7. Bagasse Feeders (see Appendix C)	49,000
8. Evaporators (2,700 additional square feet)	81,000
and Heaters (16.200 additional square feet)	509,000
Total Cost	1,552,000

Export Power Generation	Power Exported (Kilowatt hours)
a. Grinding Hours (1137 kW x 1921)	2,184,000
b. Lost-Time Hours (3054 kW x 778)	2,376,012
c. Off-Season (660 kW x 736)	485,851
Total	5,046,663

The financial analysis, Table 5.4, indicates that the returns to El Palmar triple under an eight year contract period. Considering this option calls for a $1.5 million investment a

longer contract period should be warranted.[24] An investment for the production of a sizeable quantity of energy should be financially attractive to the sugar mill owner in order to justify the investment by the sugar mill. Installation of lower cost used equipment, can of course, improve the financial return to the sugar mill owner but often at the risk of lower reliability.

El Palmar also could increase boiler capacity by increasing boiler feedwater temperature to 300°F from the present 212°F. This could be accomplished in two steps. First, by installing an insulated and covered boiler feedwater pressure tank with exhaust steam (15 Psig) injection coils in the tank to heat the water up to 250°F. Second, install an economizer on each 60,000 pound per hour boiler after the airheater because the airheaters are already installed. Although, the preferred configuration is the economizer immediately following the boiler and the airheater following the economizer in the flue gas ductwork. Raising the water temperature to 250°F would increase the boiler capacity about 3.7 percent and raising the temperature to 300°F would increase the boiler capacity 9.0 percent. Each economizer would require approximately 4,250 square feet of heat transfer surface if they followed the existing airheaters. The first step could be taken at anytime; however, the elevation of the BFW storage tank must be sufficient to insure a satisfactory net positive suction head on the boiler feed pumps for boiler feedwater of 250°F.

To design and plan for the installation of the economizers, more reliable and detailed information on the flue gas temperatures exiting the boilers and the present airheaters would be required. The capital costs for the two steps for both boilers could range from $350,000 to $450,000. The increase of boiler capacity by 9 percent could add to the capability of exporting an extra 1,000 kW per grinding hour when using a condensing turbogenerator of the type previously specified.

---

24 Electricity revenues for years 1 and 2 are $ 284,034 ($301,290 - $17,260 in Off- Season Expenses)and in years 3 to 25 they are $ 127,361 ($144,621 - $17,260). The capital expenditures are for $1,552,000 (Loan $1,242,360 and Equity $310,590),assuming a loan interest rate of 11%, a grace period of the first 2 operating years; Debt/Equity Ratio of 4/1; and Loan Period of 10 years after 2-year grace period, single annual payment.

Table 5.4

Financial Analysis of Power Production for EL PALMAR

Option	Power Export (kW)	Hours of Power Export (hrs/yr)	Kilowat Hours (kWh) Exported	Capital Cost ('000 $US)	Electricity Revenues 2-Yr Contract ('000 $US)	Electricity Revenues 8-Yr Contract ('000 $US)	Financial NPV 2-Yr Contract ('000 $US)	Financial NPV 8-Yr Contract ('000 $US)
(2) Major Investment	3,054	778 (downtime)			Yrs 1-2 284.0	Yrs 1-8 284.0	NPV (10%) + 124.6	NPV (10%) + 666.0
	1,137	1,921 (grinding)	5,046,663	1,552	Yrs 3-25 127.4	Yrs 9-25 127.4	NPV (15%) + 41.3	NPV (15%) + 474.6
	660	736 (off-season)					NPV (25%) + 27.6	NPV (25%) + 317.9

Miscellaneous Recommended Additions

Milling Plant Drives

The milling plant has a very low milling capacity which is further aggravated by the fact that the mill drives are constant speed. The mill roll square feet per tonne cane hour is 4.03 whereas the general range is 5.50 to 8.00 in most cane areas. Also, the fiber milling rate is 11.34 whereas the usual range is 8 to 10 tonnes per hour. These limitations are quite noticeable in that reduced mill extraction is low and bagasse pol and moisture are high. Bagasse moisture is high even though maceration percent cane is very low.

Cane preparation with the Krajewski K-9 knives is said to be very good. The prepared cane should maintain an Index of Preparation in excess of 90 so as to reduce the workload of the mills. Since it is very difficult to keep the mills loaded with the mill setting design cane tonnage at all times and the mills cannot be slowed down, they probably operate under low load open conditions much of the time. Performance data indicate this possibility.

The factory may wish to explore the possibility of converting the motors to a thyristor rectified AC system that drives DC motors which are fully variable from zero to full speed. The justification for such an investment primarily would be improved sucrose extraction. A secondary benefit would be a lower moisture content bagasse with a higher British Thermal Unit value per pound of bagasse. This would improve boiler efficiency through a reduced weight of flue gas.

Excess Air Percentage

Maintain the excess air percentage below 72.5 percent or a CO_2 content in excess of 12 percent.

Vacuum Pan Steam Requirements

Reduce dilution on the pan floor by using less water in pan boiling and in washing sugar in the centrifuges. In the evaporator calculations, a 20 percent steam usage on cane was assumed.

Many sulfitation factories operate with 16 to 18 percent steam usage on cane through good pan floor controls and the use of steam or superheated water in the centrifuges. Such centrifuges are usually fitted with separator curbs that separate the wash molasses (higher purity) from the non-wash molasses (lower purity). A reduction of 2 percentage points for pan floor steam usage would amount to a reduction of approximately 6,000 pounds of steam per hour. The power potential from this steam saving would amount to 400 kW.

High Efficiency Back Pressure Turbogenerator (BPTG)

Installation of a high efficiency BPTG to replace present inefficient units should be studied when exhaust steam demand and supply are finally determined after the various recommended improvements have been completed; particularly the exhaust demand that must be passed through the BPTG units. A 31 lbs/kWh unit using 141,021 lbs steam/hr would generate 4,549 kW or 18.6 percent more power than the present two units using the same amount of steam.

Option Recommendation: Advantages/Disadvantages

The demand for exhaust steam must be reduced for several reasons. These include (1) the shortage of high pressure steam capacity, (2) the lack of sufficient surplus bagasse and/or surplus high pressure steam to supply a condensing turbogenerator and (3) the existing BPTG's need to supply the exhaust steam demand for processing work. Initially Power Export Option 1 is recommended on the following schedule:

1. First Year (1991)

   a. Boiler instrumentation and bagasse feeders be installed prior to 1991 so that work can be carried out in 1991 to increase CO_2 content of flue gas above 12 percent (excess air below 72.5 percent).

   b. Install, for 1991 operations, an insulated boiler feedwater storage tank equipped with perforated steam (15 Psig) injection pipes to heat the boiler feedwater up to the 245 to 250°F range. Tank to have sufficient elevation above BFW pumps to provide positive suction head.

   c. Work on milling plant operations to attempt to reduce bagasse pol and moisture so as to increase the High Heat Value of the bagasse. Also make efforts to reduce excess pan floor and centrifugal station dilution of sugar liquors.

   d. Order necessary heaters and evaporator cells for operating the evaporators as shown in Figure 5.2 and Table 5.2 which should reduce processing exhaust steam consumption to about 141,000 lbs/hr from the present 161,748 lbs/hr shown in Figure 5.1. Installation to be completed and tested during the 1991 off-season.

2. Second Year (1992)

   a. During 1990 and 1991 determine the cost and availability of new and used condensing turbogenerators in the 1,500 to 3,000 kW range. If the results of the work called for in 1.a. to d. above indicates there will be more surplus high pressure steam available than the specified 1,500 kW unit can handle then purchase and install a suitably sized larger unit for the 1992 milling season.

   b. Also, during 1990 and 1991, determine the availability of a used back pressure turbogenerator capable of handling 140,000 lbs/hr of 175 Psig steam and when exhausting at 15 Psig will have a steam rate of 30 to 32 lbs/kWh. The unit would replace the inefficient existing backpressure units.

The advantage of following the stepwise schedule above would be the maximizing of power production through an efficient condensing unit and at the same time increasing power production from a given quantity of steam going to the BPTG's by installing a more efficient BPTG. Option 1, as originally specified and financially analyzed, indicated an export power production of 51.23 kWh per tonne bagasse whereas the above schedule would increase the power to a minimum of 65.13 kWh per tonne bagasse. This figure could possible be increased another 15 kWh to the Taboga level by the installation of boiler economizers.

The only disadvantage is the loss of a small amount of revenue by delaying completion of the program by one year. On the other hand, the final installation specifications would be based on more reliable actual operating data.

CHAPTER 6 JUAN VIÑAS

Existing Equipment Observations

The cane production, feedstock availability, and other technical characteristics of Juan Viñas are described in Table 6.1 and Appendix B. As noted earlier, management at Juan Viñas is exploring the financial attractiveness of producing export power for sale. Juan Viñas has conducted two preliminary studies on power export potential based on using a new boiler (300 Psig or 450 Psig), bagasse dryer and new turbogenerators. The 450 Psig option warrants further study, on the basis of obtaining lower-cost used equipment and the two turbogenerators be a 450/240 Psig BPTG and a 240/-10 Psig condensing unit. Under this scenario, the total cost of the 450 Psig project is estimated at $4,366,000.[25] The export kilowatts would be 1997.3 kW and the export kilowatt hours is 4,793,520 over a 2,400 hour period. The problem at Juan Viñas is the small crop size and the low fiber content of the cane. These two factors keep the fuel level too low for an economic return on such a large investment without more favorable lending terms and power purchase prices.

With the exception of the evaporator station, the Juan Viñas factory has adequate equipment capacity. The boiler plant capacity is adequate (1,360 pounds of steam per tonne cane hour), the boilers are fired with bagasse that have a good High Heat Value of 4,096 BTU per pound due to a moisture content in the 49 to 50 percent range.[26] Two hydroelectric plants (250 and 300 kW) supplement the factory-installed turbogenerator capacity (3,350 kW) with an average year-round output of 300 kW. The hydro power output is sufficient to satisfy the factory off-season load as well as the outside power requirements. The milling season power load is reported to average 1,500 kW.

The sugar milling plant capacity at Juan Viñas is adequate. It has all electric motor drives with two and three speed motors so that mill speed can be varied with the cane milling rate. The plant's fiber milling rate (FMR) of 6.82 tonnes per hour and the capacity value of 5.9

---

25 Annual revenue over a 25 year period is estimated at $286,181. The NPV (10%) is - $877,606 using the $4,366,000 installed cost. If suitable used equipment could be found so that the capital cost was reduced one-half the new equipment cost, the NPV (10%) would be +$764,905.

26 Using airheaters and the indicated bagasse moisture, the boiler furnaces probably have the ability to supply the boilers with sufficient heat to operate up to 115% of rated capacity. This would be particularly true if the percent CO_2 is above 12%.

Table 6.1

JUAN VIÑAS
PLANT/FACTORY DATA
(Production Statistics 1989)

119,804	TC/YR
52	TC/Hr Avg. Production Rates
2,813	Gross Production Hours/Yr (117 days/yr)
2,329	Net Production Hours/Yr (97 days/yr)
121	Hours - Start and Stop, Cleanup, and various other causes (4% of gross)
484	Hours - Lost Time (17% of gross)
83%	Grind Time Eff., Net/Gross (5% no cane plus 0.3% rain)
92%	Grind Time Eff. Factory percentage Available Grinding Time
—	Tonnes Raw Sugar/yr
10,817	Tonnes White Sugar/yr
10,817	Tonnes Total Sugar/yr
11	TC/TS
—	Gal or Liters Alcohol
3,167	Molasses
—	Other Products
30,503	Tonnes Bagasse
50	Bagasse Moisture (percent mcwb)
3	Pol Bagasse
13	Imb./Cane
14	Mixed Juice Bx
86	Mixed Juice Pty
15	Cane Juice Bx
86	Cane Juice Pty
59	Syrup Bx
1,500	kWh Generated
1,525±	Tonnes/yr Surplus Bagasse
5%	Surplus as percent of Total Bagasse
90	Mixed Juice percent Cane

square feet of mill roll surface per tonne cane hour are both quite favorable for good milling performance on a 15 roller mill, a cane shredder and two sets of cane knives.[27]

Power Option I. Existing Steam and Power System - Minimum Investment

Equipment	Costs (US $)
1. ICE Interconnection and synchronization electrical switchgear See (CATSA Pg. 23 for details)	70,000
2. Transformer - 1,000 KVA, 3 PH Station type HV 12,470 VAC Wye taps LV 480 VAC Delta	17,000
Total capital cost	87,000

Export Power Estimates	Kilowatts
1. Total Production (Kilowatts Generated at Factory) 926 kW (TG) + 250 kW (Hydro)	1,176
2. Current Demand (factory and outside load)	520
3. Available for Export (Option 1)	656 413,936 kWh

The summary production and financial data for Option 1 (and 3) are shown in Table 6.2, with costs and equipment for Option 1 broken down above. The reported processing steam demand is 1,100 pounds per tonne cane hour or approximately 55,000 pounds per hour. The capacity of the two boilers, 68,000 pounds per hour (40,000 + 28,000), is quite adequate for 55 tonnes of cane per hour when the boilers and furnaces can be operated in excess of rated capacity. From the CO_2 data (8 to 14%) and the flue gas temperatures exiting the airheaters, 2.28 pounds of steam would be produced per pound of bagasse.

Using a 2,000 kW backpressure turbogenerator and the hydrogenerator (250 kW), the factory can satisfy the factory demand of 1,500 kW (1,350 kW factory load plus an outside load of 150 kW) with the available steam. The availability of hydro-electric power adds to the capability of the factory to export power during the downtime period.

From a total of 14.29 tonnes bagasse available per grinding hour, it is estimated that 2.21 tonnes of bagasse would be available for a total of 4,822 tonnes surplus bagasse during 2,182 grinding hours. This quantity is low because the cane being milled at Juan Viñas has a low fiber content (12.5 percent vs. 14 to 15 percent at the other four factories).

---

27 This observation is borne out by the fact that bagasse pol is 3.07% even though the maceration percent cane is low at 13.119% (108.7% on fiber milled). If the milling plant has adequate messchaert juice groovings on the feed and discharge rolls and the mills have grooving with not more than a 45° angle, the maceration could be increased to 200% on fiber (24.4% maceration on cane). Bagasse pol would be reduced and mill extraction increased while maintaining the same bagasse moisture content range. The evaporator capacity would have to be increased to handle the additional evaporation loaded caused by the increased maceration.

Table: 6.2

Financial Analysis of Power Production for JUAN VIÑAS

Option	Power Export (kW)	Hours of Power Export (hrs/yr)	Kilowatt Hours (kWh) Exported	Capital Cost ('000 $US)	Electricity Revenues 2-Yr Contract ('000 $US)	Electricity Revenues 8-Yr Contract ('000 $US)	Financial NPV 2-Yr Contract ('000 $US)	Financial NPV 8-Yr Contract ('000 $US)
(1) Minimum Investment	656	631 (downtime)	413,936	86.6	Yrs 1-2 24.7 Yrs 3-25 11.9	Yrs 1-2 24.7 Yrs 3-25 11.9	NPV (10%) + 57.2 NPV (15%) + 39.8 NPV (25%) + 26.4	Too small for 8-year contract
(2) Major Investment Option 3	458 772 250	631 (downtime) 2,182 (grinding) 2,813 (hydro)	2,676,752	902	Yrs 1-2 159.8 Yrs 3-25 76.7	Yrs 1-8 159.8 Yrs 9-25 76.7	NPV (10%) + 83.7 NPV (15%) + 29.0 NPV (25%) + 15.7	NPV (10%) + 405.3 NPV (15%) + 281.0 NPV (25%) + 178.7

* The Financial Analysis includes revenues minus capital equipment costs.
Discount rates in Parentheses.

NOTE: Juan Viñas options 2A and 2B are not included in the economic analysis table because the NPV results for the new equipment are highly negative and the 50% price reduction for used equipment is highly speculative.

Downtime, scheduled stops and holiday hours are assumed to be 631 hours. This would provide 7.64 tonnes of bagasse per downtime hour and at 2.28 pounds steam per pound of bagasse 38,419 pounds of steam per downtime hour would be available. Passing this quantity of steam through the boilers (less 3,178 pounds for losses and other uses) would generate 926 kW with the backpressure turbogenerator using a steam rate of 37.8 pounds of steam per kilowatt hour. The exhaust steam would be condensed in the evaporator set and vacuum pans. The total exported power under this option equals 656 kW.

The financial analysis results show that a $86,600 investment in new capital equipment produces an NPV of $57,200, assuming 10 percent discount rate.[28] Financial Results for a two-year contract are:

NPV (10%) + $57,283
NPV (15%) + $39,757
NPV (25%) + $26,424

The foregoing results indicate the export of power during the non-grinding hours would be profitable if the operating conditions assumed above are attained. If the hydro power were not available or the available steam from surplus bagasse decreased to 20,260 pounds per hour, the NPV (10 percent) would decrease to a negative value of -$8,869. This indicates how sensitive the financial results are to changes in fuel availability and power production conditions.

Option 2 - Increased Export Power Options Using Different Boiler Pressures

In 1989, Juan Viñas conducted two cogeneration power studies which will be referred to as Option 2A and 2B, using flue gas dried bagasse [29] and boiler feedwater temperature of 340°F.[30] In one option the 76,442 pound boiler operated at 300 Psig and 100°FSH, and in the second option at 450 Psig and 200° FSH. Under these two analyses, the anticipated cogeneration power exports[31] are as shown below in Table 6.3.

---

28 The electricity revenues under a 2-Year contract are: years 1 and 2 - $24,713; Years 3 through 25 - $11,862. The loan conditions are as follows: Debt/Equity ratio of 4/1; Debt $69,280; Equity $17,320; Interest: 11.0%; Grace Period: First two operating years with 10 year loan.

29 Having 60% fiber, 38% moisture and 3% ash.

30 This indicates it was passed through a boiler feedwater deaerating heater and an economizer.

31 These figures for total power for 2A and 2B would be the maximum possible export of power since no allowances are made for bagasse requirements for start-up of the factory, for scheduled daily four hour stoppages when the furnaces are banked, or for normal lost-time causes when small amounts of steam are used for various purposes.

Table 6.3

Power Output for Variations on Option 2

Option		Power (Kilowatts)
Option 2A -	Condensing turbogenerator Psig 300/-10	1,360.78
Option 2B* -	a) Topping turbogenerator Psig 450/240	998.47
	b) Condensing turbogenerator Psig 240/-10	998.83
	c) Total Power for 2B	1,997.30

* A greater power producing combination would be a topping back pressure turbogenerator Psig 450/20 and condensing turbogenerator Psig 450/-10. This equipment arrangement would produce 9 to 10% more export power than the 1,997.30 kW indicated for Option 2B.A used with single extraction (20 Psig) or double extraction (240 Psig and 20 Psig) would also be suitable.

To determine the maximum production payout, the second case was analyzed using estimated capital costs. The pertinent data and results are listed below:

Additional Equipment for Option 2B	Costs ($US)*
1. Rotary Drum Dryer	545,000
2. Topping, Turbogenerator (1000 kW) and electrical switchgear	415,000
3. Condensing turbogenerator (1000 kW) and electrical switchgear	606,000
4. Interconnection and miscellaneous switchgear plus 2,500 KVA transformer	220,000
5. Boiler 450 Psig, 80,000 pounds per hour	2,580,000
Total	4,366,000

Export Power Generated	
1. Kilowatts Generated for Export	1,997.3 kW
2. Kilowatt hours Exported (2,400 hours x 1,997.3)	4,793,520.0 kWh

* Capital Costs installed basis, new equipment.

It is apparent from the financial results[32] that the capital cost for new equipment is too great for the revenue generated from the fuel provided by the small cane tonnage (120,000 tonnes cane per year). If Juan Viñas were able to purchase used equipment to meet their requirements for one-half the cost of the new equipment ($2,183,000), the financial results would be greatly improved. This alternative is similar to the present course of action being taken by El Viejo in the development of their export power program.

32 Loan Conditions are as follows: Debt/Equity: 4/1; Debt $3,492,800; Equity $873,200; Interest - 11%; Grace Period - First two operating years; Repayment Schedule - 10 annual payments; NPV (10%) - $877,606, IRR is -3.7%

Assuming the contract with ICE would still provide the same revenue, the financial results based upon purchasing used equipment is as follows:

NPV (10%)	+ $764,905
NPV (15%)	+ 392,161
NPV (25%)	+ 148,276
IRR	3.4%
Breakeven year -	Nineteenth

The results appear sufficiently favorable to justify Juan Viñas confirming with ICE the probable contract terms and potential revenue. If the revenue is sufficiently close to the revenue used, they could then recalculate their power production, taking into account bagasse fuel required during scheduled stops and lost-time periods. Such fuel usage would generate some export power so that the total export power would not be too different from the figure used. The final step would be a search for suitable and reliable used equipment.

Option 3 - Maximum Power Option Without Bagasse Dryer and New Boiler

Additional Equipment	Costs ($US)
1. Condensing Turbogenerator 1000 kW, 480 VAC, 260 Psig, 473 °FFT/3: Hg Abs	487,000
Freight, Duty and Installation	119,000
2. Internal Electrical Switchgear (generator to power export transformers) and Turbogenerator Control Panel which includes items indicated in Appendix E such as Disconnect Switches, Main Circuit Breakers, PT's and CT's for Instruments and Relays, Locking Relay, Under Frequency Relay, Under Voltage Relay, Instantaneous Time Delay - Phase Balance Relays, Generator Voltage and Frequency Meters plus a complete shared Synchronization Panel.	45,000
Freight, Duty and Installation	11,000
3. Transformer (Rebuilt) and Internal Protection 480 VAC Delta to 12,500 KV Wye, 1,500 KVA	19,000
Freight, Duty and Installation	5,000
4. Interconnection (transformer high side to Public Utility line) which includes Lightning Arrestors and Grounding Protection, Metering, Outdoor Switch (fused) and Disconnect Switch (not fused.)	19,000
Freight, Duty and Installation	4,000
5. Electrical Costs Contingency	10,000
6. Boiler Instrumentation (see Appendices C and D)	18,000
7. Bagasse Feeders (see Appendix C)	36,000

8. Evaporators (2,500 Square feet) and Heaters (2,400 square feet)	50,000 79,000
Total Capital Costs	902,000

Export Power Generation

	Kilowatts
1. Kilowatts Generated for Export	
a. Grinding time - 2500 - 1500 - 228 (decrease in BPTG output due to reduced steam to boiling house)	772
b. Downtime - 878 - 420 (outside 150 kW and factory 270 kW loads)	458
c. Hydrogenerator power	250
Total Produced for Export	1,480 2,676,752 kWh

The factory lacks adequate evaporator capacity for both its present milling rate of 50 tonnes cane per hour and its proposed rate of 55 tonnes. This is indicated by the low 59.22 syrup brix and the low dilution percent cane of 13.12. The low syrup brix causes more than normal steam use in the vacuum pans and the low dilution percent cane probably causes extra pol loss in the bagasse. An evaporator set with primary and secondary heating of mixed juice and first heating of clarified juice is proposed (see Figure 6.2). With the heavy withdrawal of vapors for juice heating and for the vacuum pans, the vapor load to the fourth cell condenser is reduced by approximately 40 percent to 4.2 tonnes per hour. This should reduce the cooling pond and permit a cell vacuum of 26". The heaters and evaporator cells would require the following heating surfaces for 55 tonnes cane per hour:

	Square Feet
a. Primary mixed juice heater	2,395
b. Secondary mixed juice heater	813
c. First clarified juice heater	450
d. First evaporator cell	5,788
e. Second evaporator cell	2,411
f. Third evaporator cell	2,453
g. Fourth evaporator cell	1,334

The mixed juice is assumed to be 100 percent on cane, clarified juice 108 percent on cane and pan floor steam 18 percent on cane for design purposes. Adjusting for present mixed juice and clarified juice quantities, the proposed configuration would reduce processing steam consumption 9,032 pounds per grinding hour. By maintaining an average CO_2 level of 12 percent, the excess air would be decreased from the present estimated 112 percent down to 72.5 percent. This would increase the pounds of steam per pound of bagasse from the present 2.28 to 2.36 for 3.5 percent saving in bagasse. Bagasse feeders of the type described in Appendix C plus sealing of all air leaks around the furnace ash doors and setting and in the boilers and flue gas ductwork before the airheaters would be needed to accomplish the reduction in excess air. This also assumes adequate heated combustion air

is passed through the furnace tuyeres and the tuyeres are cleaned and not filled with furnace slag. Consideration could also be given to installing an economizer on the 40,000 lbs/hr boiler to increase the steam production efficiency by 5 to 10 percent while burning the same amount of bagasse required for 40,000 pounds of steam.

In Option 3, a 1,000 kW high pressure condensing turbogenerator, similar to the Juan Viñas second case proposed condensing turbogenerator, would be installed. The milling rate would be 55 tonnes cane per hour, milling hours 2,182 hrs/season, and downtime including scheduled downtime would be 631 hours per season. Surplus bagasse available per downtime hour would be 4.03 tonnes. A grinding hour would require 12.84 tonnes of bagasse for 64,563 pounds of steam per hour. The boilers would have to operate at near rated capacity. Figure 6.1 shows the arrangement with the new equipment.

The financial analysis for Option 3 is as follows (and shown in Table 6.2), assuming two lengths of contracts.

Financial Analysis

Power Revenues under Two-Year Contract

Years 1 and 2 -	$159,806
Years 3 through 25 -	$76,702

Financial Results[33]

Two-Year Contract	Eight-Year Contract
NPV (10%) + $83,726	NPV (10%) + $405,343
NPV (15%) + $29,019	NPV (15%) + $281,024
NPV (25%) + $15,675	NPV (25%) + $178,674

The poor returns are attributed to the short contract period (two-years), the small volume of cane, and low fiber and bagasse as a percent of cane. If ICE were to agree to an eight-year initial contract, the financial results would be greatly improved as indicated above and in Table 6.2. These results, again, indicate the need for ICE to negotiate longer contracts. If existing sugar factories make sizeable investments in new or used equipment to significantly increase power exports, ICE should consider the facility as a new investment entitled to an initial eight-year contract.

Option Recommendation: Advantages/Disadvantages

The factory should start out with the minimum power and investment Option 1 plus the installation of the recommended evaporator-heater configuration of Option 3. Without the added equipment item, the export power production is estimated at only 13.6 kWh/tonne

[33] The Debt/Equity ratio is 4/1; Loan $721,600; Equity $180,400, and interest rate 11%.

bagasse. This production would possibly be raised by 8.3 kWh/tonne bagasse to a total increase of 21.9 kWh/tonne bagasse due to fuel savings by the evaporator and juice heater changes. Minimum technical changes provide the advantage of giving some revenues while the factory's Option 2B (450 Psig operation) is investigated to determine if total estimated capital cost can be reduced by 50 percent through the purchase of reliable and suitable used equipment. Option 2B provides better financial returns than Option 3.

If high capital costs prevent the adoption of Option 2B, then the specifications for Option 3 could be followed with the new evaporator configuration which is installed under Option 1. By adding incrementally, sufficient time would also be available to obtain the necessary boiler operating data for evaluating the capital cost, potential capacity gain and the financial benefit of installing an economizer in the 40,000 lbs/hr boiler flue gas system. The steam rate per kilowatt hour of the 2000 kW BPTG should be checked to determine if purchase of a more efficient unit is justified.

By following the above schedule, the factory would have the advantage of earning revenue while methodically selecting the most profitable major investment-maximum export power option. While the disadvantage of a one year delay in earning maximum power revenue is evident, there is considerably less risk in selecting the wrong course of action or equipment of inadequate capacity or design.

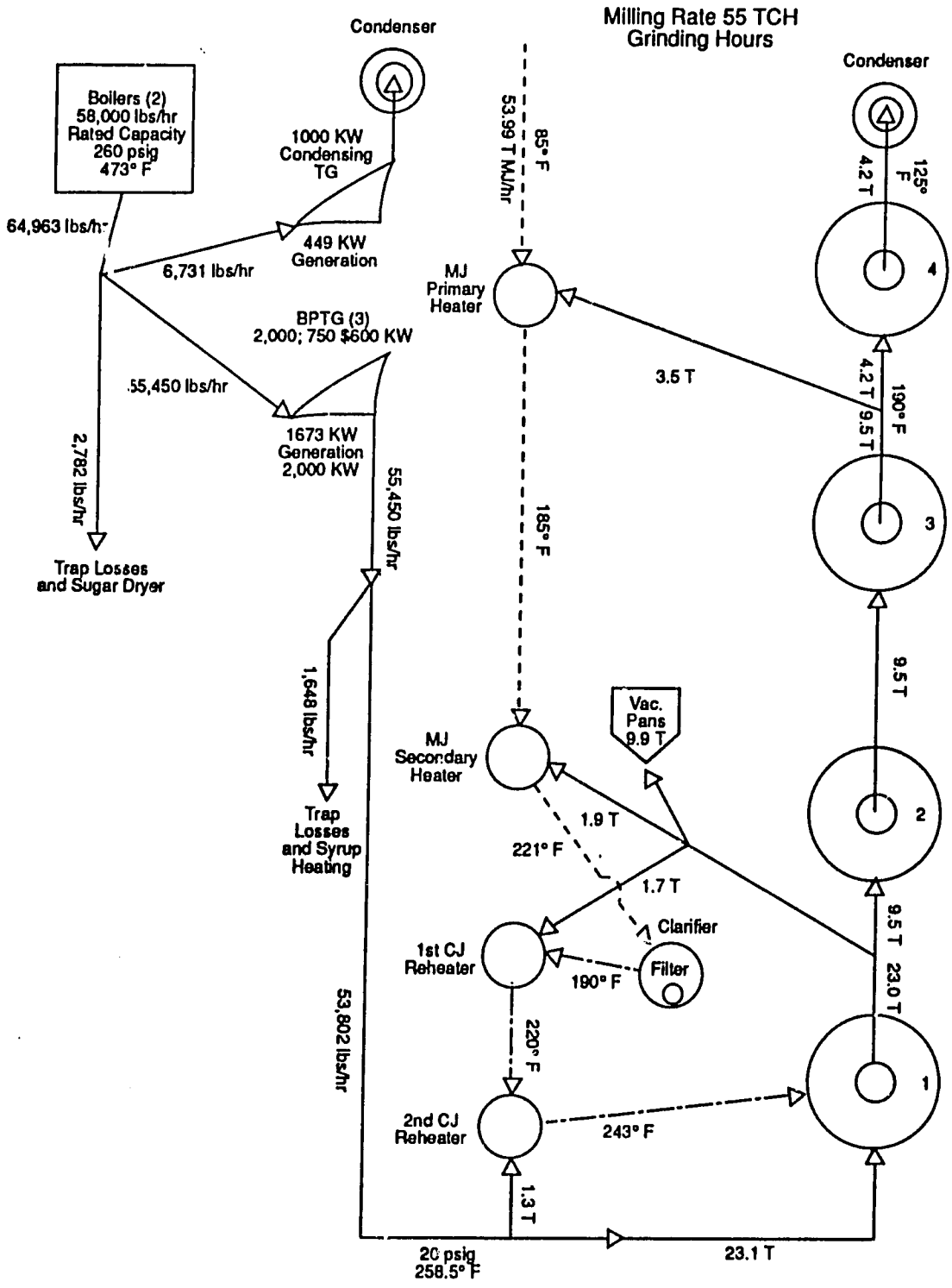

JUAN VINAS: New Evaporator - Juice Heating - Vacuum Pan Arrangement and Steam Flow
Figure 6.1

APPENDICES

Previous Page Blank

APPENDIX A
TYPICAL STEAM TURBINE PERFORMANCE CURVES

Previous Page Blank

COPPUS/MURRAY

PERFORMANCE CURVE

MURRAY QUOTATION NUMBER	G06142 / TURBINES FOR BOCA CHICA
FRAME	141UV2
INLET PRESSURE	160 PSIG
INLET TEMPERATURE	470 DEG. FTT
EXHAUST PRESSURE	12 PSIG
RPM	5000/4000/3000

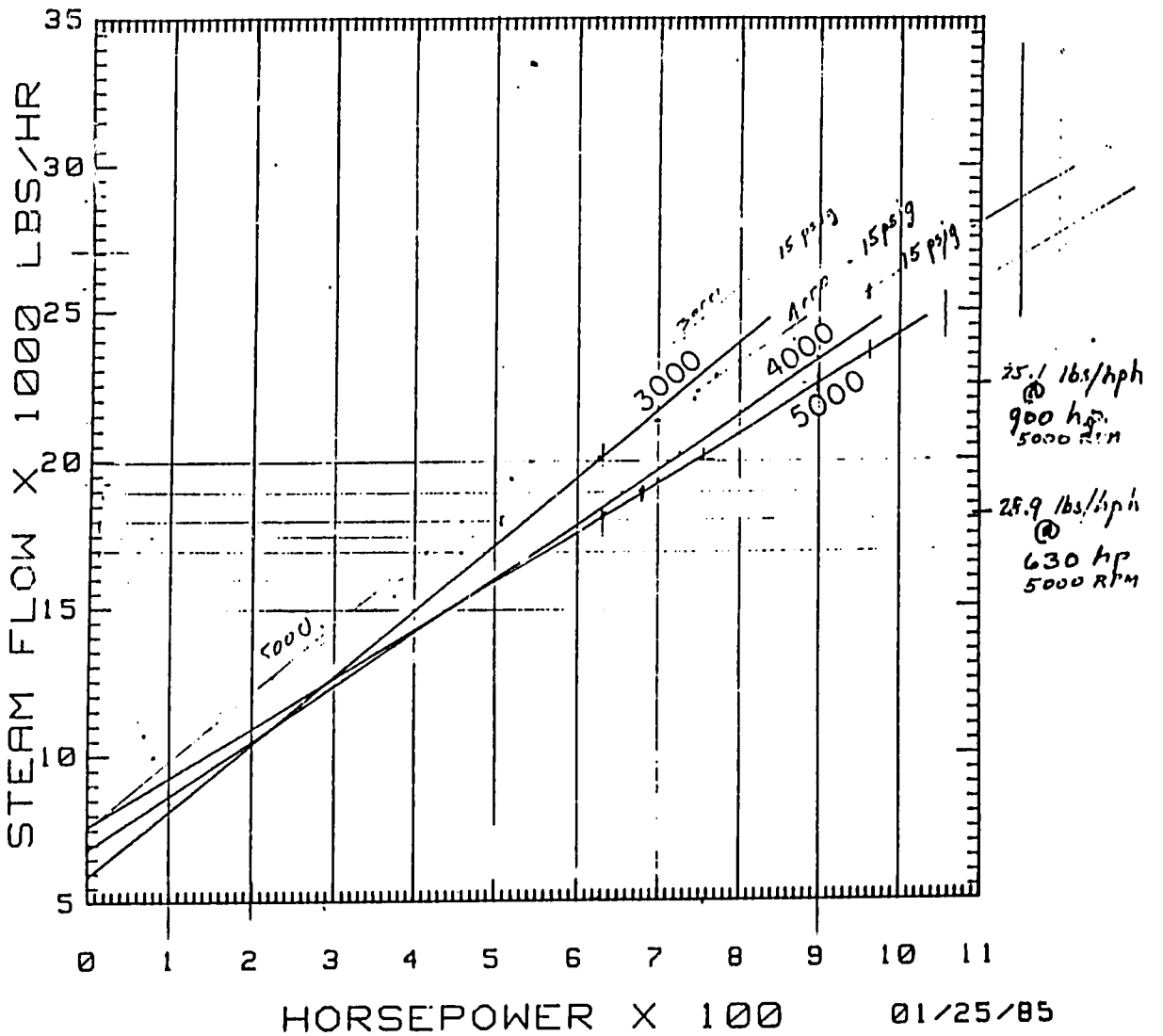

COPPUS/MURRHY

PERFORMANCE CURVE

MURRAY QUOTATION NUMBER	G06142 / TURBINES FOR BOCA CHICA
FRAME	141UV2
INLET PRESSURE	160 PSIG
INLET TEMPERATURE	470 DEG. FTT
EXHAUST PRESSURE	12 PSIG
RPM	5000/4000/3000

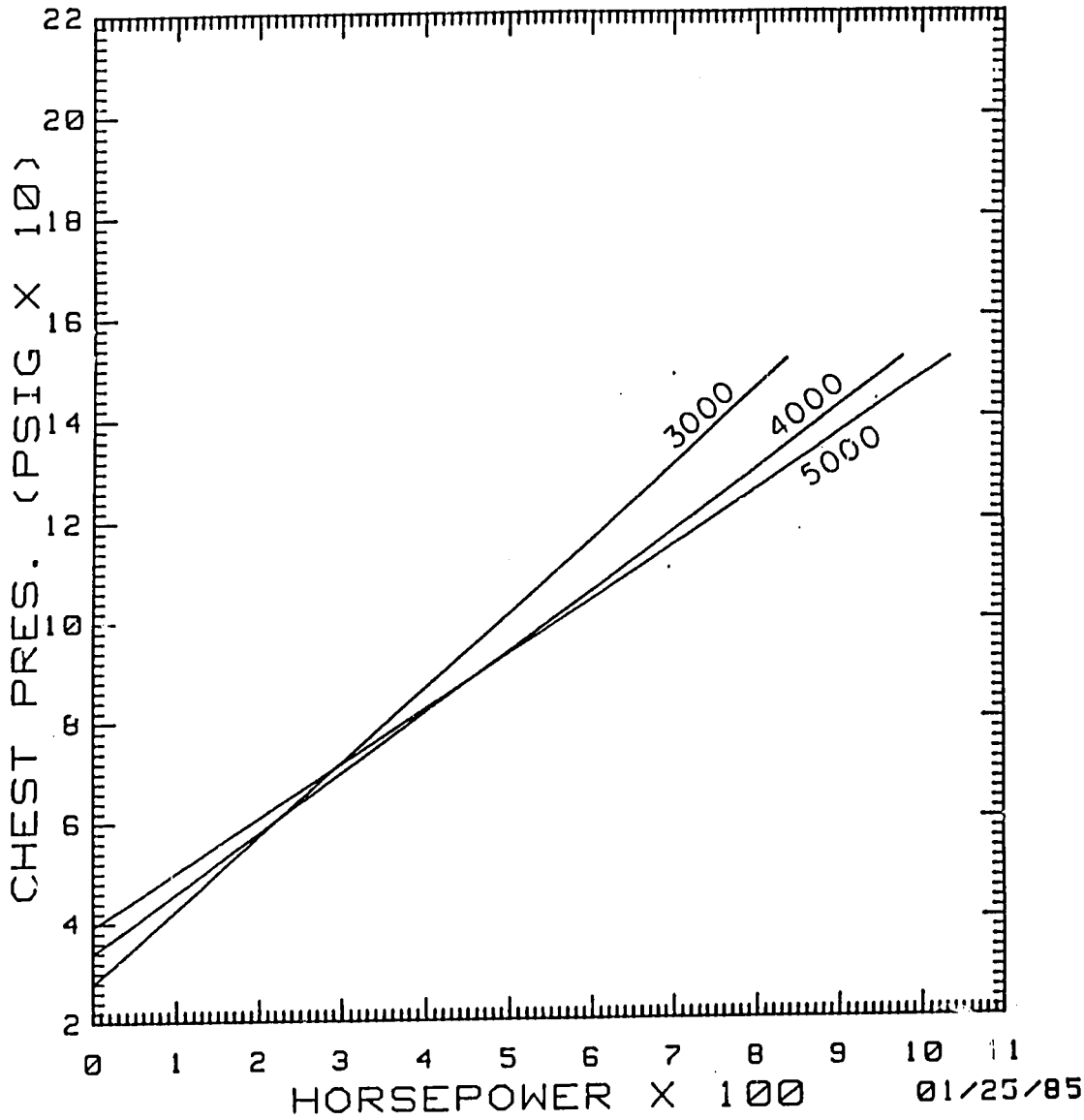

COPPUS/MURRAY
PERFORMANCE CURVE

MURRAY QUOTATION NUMBER	G06142 / TURBINES FOR BOCA CHICA
FRAME	141UV2
INLET PRESSURE	160 PSIG
INLET TEMPERATURE	470 DEG. FTT
EXHAUST PRESSURE	12 PSIG
RPM	NOT APPLICABLE

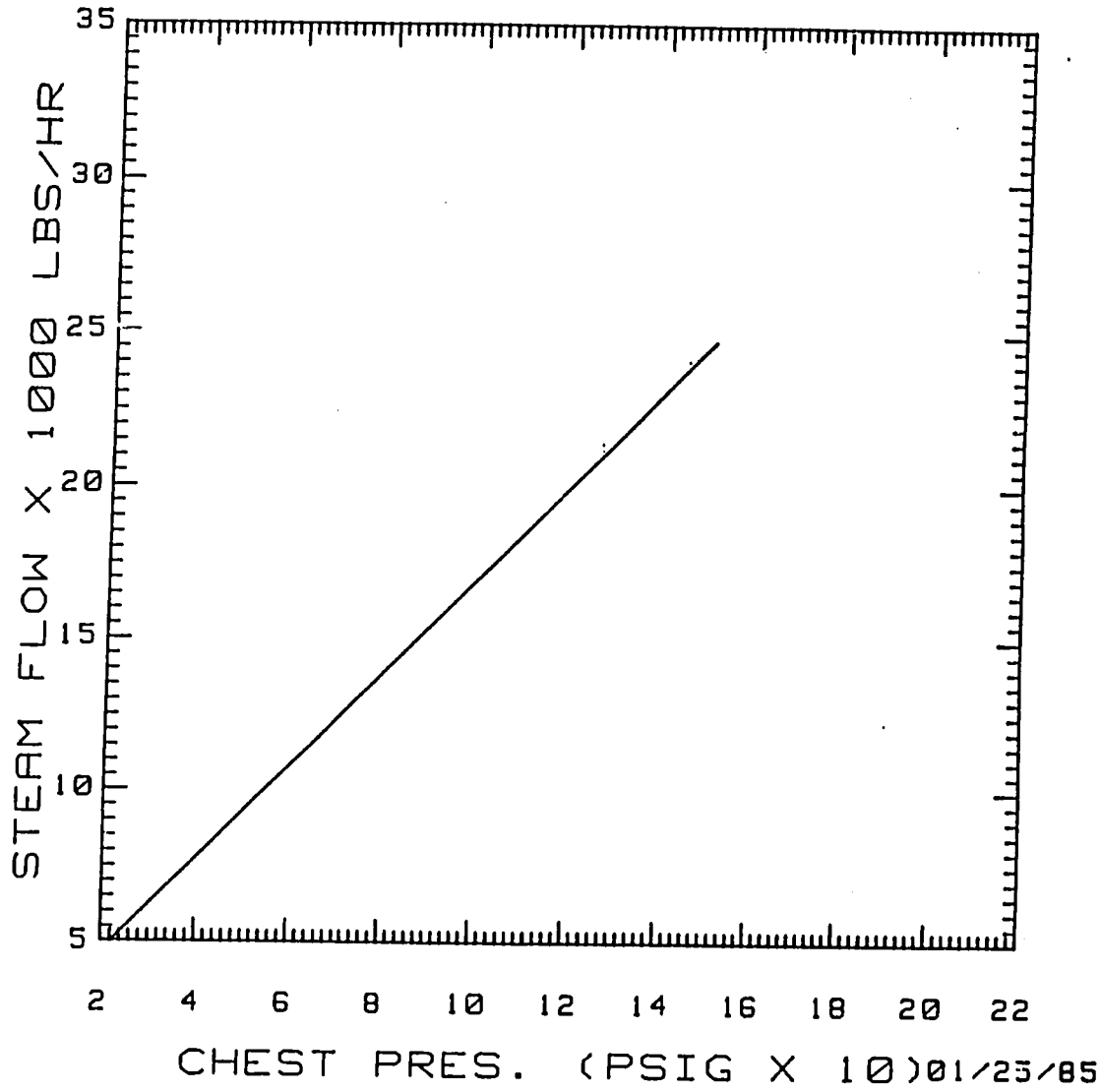

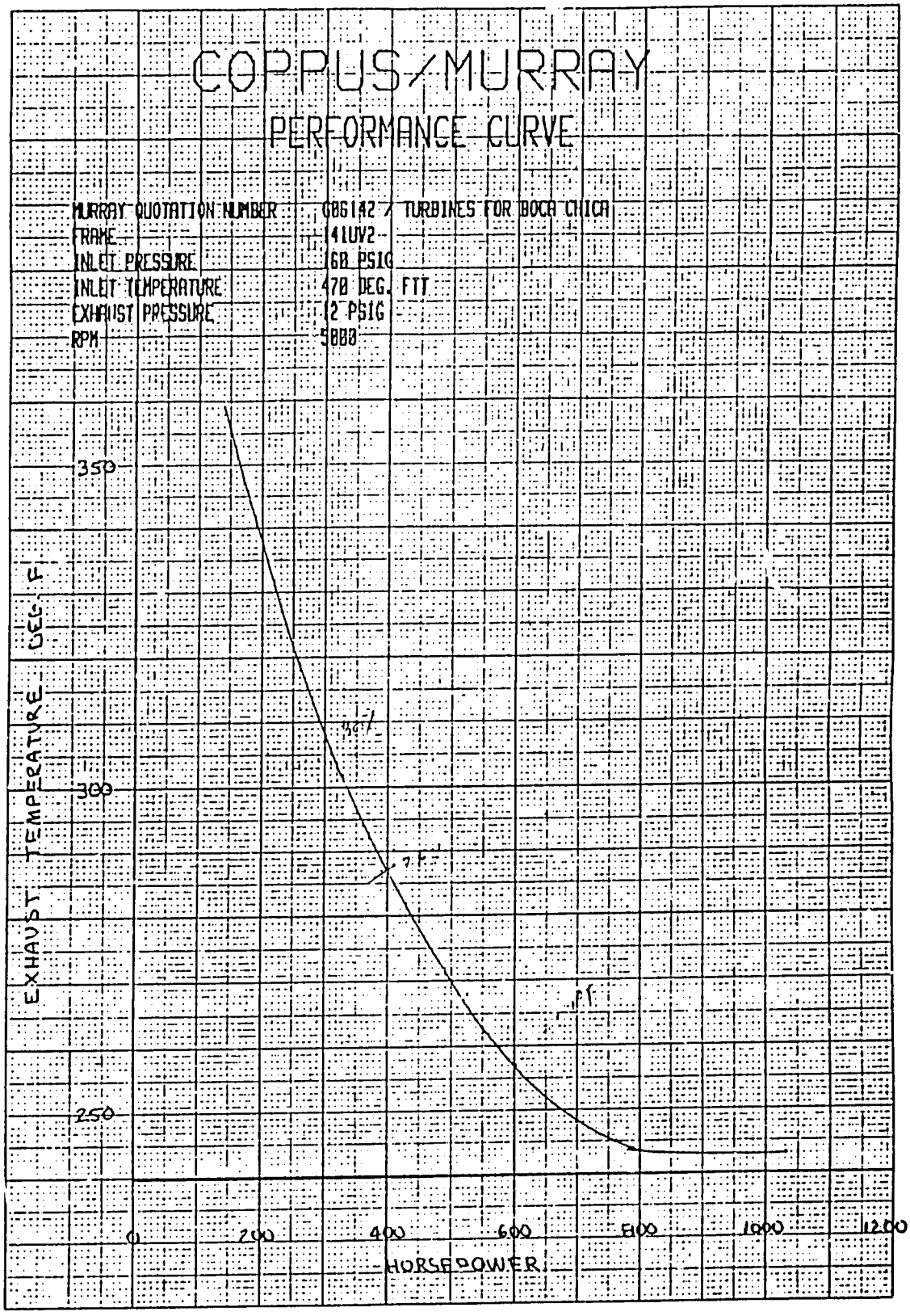
COPPUS/MURRAY
PERFORMANCE CURVE
MURRAY QUOTATION NUMBER 086142 / TURBINES FOR BOCA CHICA
FRAME 141UV2
INLET PRESSURE 68 PSIG
INLET TEMPERATURE 470 DEG. FTT
EXHAUST PRESSURE 12 PSIG
RPM 5800
EXHAUST TEMPERATURE DEG. F
350
300
250
0
200
400
600
800
1000
1200
HORSEPOWER

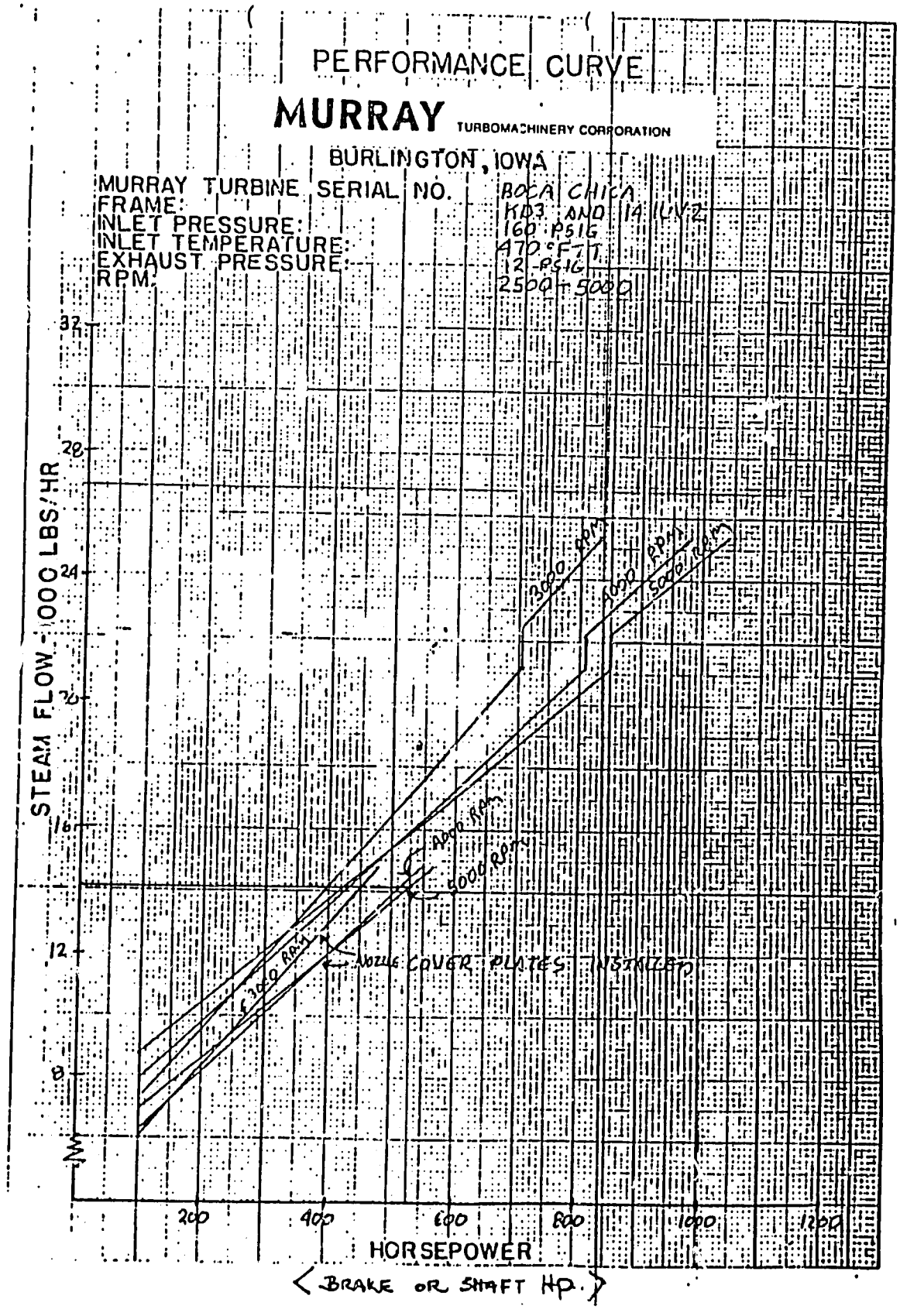
PERFORMANCE CURVE
MURRAY TURBOMACHINERY CORPORATION
BURLINGTON, IOWA
MURRAY TURBINE SERIAL NO.
FRAME:
INLET PRESSURE:
INLET TEMPERATURE:
EXHAUST PRESSURE:
RPM:
BOCA CHICA
KD3 AND 14 LV2
160 PSIG
470°F
12 PSIG
2500-5000
STEAM FLOW - 1000 LBS/HR
32
28
24
20
16
12
8
4
3000 RPM
4000 RPM
5000 RPM
NOZZLE COVER PLATES INSTALLED
200
400
600
800
1000
1200
HORSEPOWER
<BRAKE OR SHAFT HP.>

APPENDIX B
SUGARCANE FACTORY AND POWER PLANT DESCRIPTIONS

CATSA
FACTORY/FACILITY DESCRIPTION

Operation Time: January to April
Shutdown Time, Dates: April 16 to January 5, 264 days

Mills -
6 - 36" x 72" mills, each having a separate turbine drive. First four turbines are 500 hp each with a steam rate of 35 lbs/hph. Last two new mills have 650 hp turbines with a steam rate of 29 lbs/hph.

Shredder - NONE

Knives -
Two sets of knives, each driven by a 700 hp turbine. Each set has 46 knives, No. 1 set has 1" clearance and No. 2 has 1/4" clearance. Turbine steam rate 35 lbs/hph.

Evaporators -
Quadruple effect evaporator set with 58,000 square feet of total heating surface; first cell (Pre Ev.) with two bodies of 15,000 square feet each, second cell and third cell each with two 4,500 square feet bodies and the fourth cell has 10,000 square feet. Exhaust steam pressure 18.0 Psig. First cell vapor heats second cell, mixed juice heaters and vacuum pans.

Boilers -
There are four boilers available. Three at 250 Psig/500°F. with steam capacities of 100,000, 120,000 and 150,000 pounds per hour, one boiler at 160 Psig, 500°FTT. All boilers have airheaters and forced draft and induced draft fans. Deaerating boiler feedwater heater heats boiler feedwater to approximately 220°F. Furnaces are pile burning type.

Turbogenerators -
There are three back pressure turbogenerators (BPTG) available; a 1977 Murray 3,000 kW unit, a 1951 Westinghouse 2,000 kW unit and a 750 kW Murray unit.

Tie Transformer -
Two 500 KVA 12,500/480 VAC are available and a third 1500 KVA unit is to be installed.

Pans - There are five vacuum pans available with excellent heating surface to working volume ratios of 1.9 to 2.1. The pan cubic feet working volumes are: 2,000; 1,200; 1,000; 1,400 and 1,200 cubic feet.

Cooling Systems -
Condenser cooling water is obtained from the nearby river. All the pans and the evaporator set have individual condensers.

Juice Heaters -
There are three juice heaters, each with 3,000 square feet of heating surface for heating mixed and clarified juices. There are also two open syrup heaters.

General Comments -
Distillery has a capacity of 10,000 liters per hour. The factory has new and old equipment as it was rebuilt in Costa Rica from used Puerto Rican equipment.

EL VIEJO
FACTORY/FACILITY DESCRIPTION

Operation Time: Mid-January to Mid-April
Shutdown Time: Mid-April to Mid-January, 245 days

Mills -
5 - 36" x 72" mills, with mills 1 and 2 driven by a single 1,000 hp turbine and mills 3 and 4 also being driven by a single 1,000 hp turbine. The fifth mill is driven by a 900 hp turbine. The dual drive turbines are 8 years old and the fifth mill turbine is 25 years old.

Shredder - NONE

Knives -
Two sets K-4 type cane knives, first set has a 500 hp turbine drive, the second set a 900 hp turbine. Both units are 25 years old.

Evaporators -
There are two sets of quadruple effect evaporators with a total of 61, 986 square feet of heating surface. The first effect for both sets has three bodies with a total of 27,775 square feet of heating surface which supplies vapors to the second effect of each set, the vacuum pans, the juice heaters and syrup heaters. The A-set is 27 years old and the B-set 22 years old.

Boilers -
There are three boilers. Two of 100,000 pounds per hour each steam capacity, 200 Psig, 370° and 437°FTT. These have pile burning furnaces and are 7 and 17 years old. The third is new at El Viejo; however, the main components are 25 years old. It is a spreader stoker roto-grate type with water tubes and water walls and a steam capacity of 200,00 pounds per hour. Steam pressure is 455 Psig and temperature 660°FTT. Boiler feedwater temperature is 200 to 250°F.

Turbogenerators -
There are four back pressure turbogenerator (BPTG) units, three-500 kW and one 1,500 kW, ranging in age from 36 to 43 years. Two newly installed used units will be available in 1990. One unit, a 7,500 kW, 450 Psig, condensing unit and the other, a 2,000 kW, 450 Psig, backpressure unit extracting at 175 Psig and exhausting at 20 Psig.

Tie Transformers -
Capacity 1,500 KVA, 12,500/480 VAC. The 12,500 VAC line (12 to 14 km) has a capacity limit of 5,000 kW.

Pans -
There are six pans with cubic foot working volumes of 1,000, 800, 1,000, 1,000, 1,000 and 1,200. Working volume heating surface ratios range from 1.8 to 2.2

Cooling Systems -
River water is used for cooling the eight multi-jet condensers on the pans and evaporators.

Juice Heaters -
There are three units with heating surfaces 2,100 square feet, 2056 square feet and 2,515 square feet. First cell vapor and exhaust steam used for heating. There are also four syrup heaters on vapors.

TABOGA
FACTORY/FACILITY DESCRIPTION

Operation Time: Mid-January to Mid-April
Shutdown Time, Dates: April 16 to January 8, 262 days

Mills -
4 - 38" x 78" mills, each driven by a 700 hp turbine with a 34.0 pounds per horsepower hour steam rate. The units are 11 years old.

Shredder - NONE

Knives -
There are two sets of cane knives, each driven by a 600 hp turbine with a steam rate of 42 pounds per horsepower hour.

Evaporators -
The factory has a quadruple effect evaporator with six cells totalling 47,500 square feet of heating surface. Their consultant recommended an additional 12,000 square feet The ages vary from 6 to 22 years. There are three - 6,000 square foot cells: one - 5,500 square foot cell and two - 12,000 square foot cells, first effect vapors are used to heat pans and juice heaters.

Boilers -
Five boilers with a total steam capacity of 265,000 lbs/hr are available; three - 25,000 pound units, one - 50,000 pound unit and a 140,00 pound unit. The latter two are relatively new. Boiler feedwater temperature is in the 200 - 205°F. range. The furnaces are the pile burning type. The newer furnaces (4) have air heaters. Boiler pressure is 220 Psig, 572°FTT.

Turbogenerators -
There are two - 1500 kW units, one - 700 kW unit and a newly installed 5,000 kW used unit. All of the units are 220 Psig, and exhausting at 20 Psig. The "new" unit is reported to have a steam rate of 24 lbs/kWh and was fabricated in 1951.

Tie Transformer -
The transformer is 1,500 KVA, 12,500/480 VAC. The factory electrical system is not synchronized with the public utility although 250 kW is purchased.

Pans -
Six pans are available with the following volumes: two -1094 cubic feet, three - 1200 cubic feet and one - 812 cubic feet. Heating surface-working volume ratio for all the pans is 1.8. Pans are heated with the first cell vapors.

Cooling Systems -
All of the barometric condensers (8) are cooled with river water (27°C) on a once-through basis.

Juice heaters -
There are four juice heaters available; with heating surfaces of two - 2,260 square feet and two - 1140 square feet. The syrup is heated by two - 412 square foot heaters. All heaters are heated with first cell vapors.

General Comments -
The factory has a 6,250 liter/hr distillery and 61,875 lbs/hr of steam or vapor.

EL PALMAR
FACTORY/FACILITY DESCRIPTION

Operation Time: January to April
Shutdown Time, Dates: April 20 to January 15, 260 days

Mills -
The factory has four mills driven by constant speed electric motors. First mill 33" x 60" with 400 hp motor, second mill 34" x 66" with 400 hp motor and last two mills 34" x 66" with 600 hp motors.

Shredder - NONE

Knives -
Three sets Farrel K-4 knives. First set 200 hp motor and 26 knives; second set 400 hp motor and 36 knives; and third set 400 hp and 48 knives.

Evaporators -
The factory has a quadruple effect evaporator with seven cells. First effect has two cells 12,000 square feet and 8,000 square feet; second effect has two cells 2,760 square feet and 1,740 square feet; third and fourth effects each have 4,700 square feet. First effect vapors heat second effect, juice heaters and vacuum pans.

Boilers -
There are four boilers with a total capacity of 162,500 lbs/hr of 175 Psig, 470°FTT steam. The boiler capacities are 2 - 60,000 lbs/hr units, 1 - 25,500 lbs/hr unit and a 17,000 lbs/hr unit. All the boilers have airheaters and the furnaces are the pile burning type.

Turbogenerators -
There are four back pressure units exhausting at 15 Psig. The capacities are 1,500 kW, 1,000 kW, 3,000 kW and 2,000 kW. The 3,000 kW unit is 49 years old. Steam rate information on the units is not available.

Tie Transformer -
Transformers in use are 2,000 KVA, 34,000/480 VAC; 1,000 KVA, 2,400/ 34,000/480 VAC and 2,000 KVA, 2400/480 VAC. A new 1,000 KVA, 2,400/480 VAC unit is being installed.

Pans -
There are six vacuum pans with the following cubic foot working volumes: 750; 750; 750; 1,200; 1,200; 1,200. Heating surface-working volume ratios are - 1.2; 2.1; 2.1; 1.7; 2.0; 2.4 respectively.

Cooling Systems -
The seven condensers are the multijet type. There are two vacuum pumps available. Condenser cooling water is obtained from a cooling spray pond.

Juice Heaters -
There are four juice heaters available: 3,500 square feet, 565 square feet, 3,500 square feet and 565 square feet. A set of one large and one small heater is operated with first effect vapor and exhaust steam while the second set is being cleaned. There are two 300 square feet syrup heaters operating on first cell vapor.

JUAN VIÑAS
FACTORY/FACILITY DESCRIPTION

Operation Time: April to July
Shutdown Time Dates: July 29 to April 3 - 248 days

Mills -
The five mills are electric drive with multi-speed motors. First and second mills are 23" x 36" driven by a single 2-speed motor (140 and 185 kW). The last three mills 23 1/2" x 40" are each driven by a 3-speed motor (50, 80 and 120 kW).

Shredder -
36" shredder driven by a 100 hp motors.

Knives -
There are two sets, one driven by a 75 hp motor and the other by a 100 hp motor.

Evaporators -
The quadruple effect evaporator has five cells with a total heating surface of 11,600 square feet. The individual cell areas are (1) 3,500 square feet, (2) 2,700 square feet, (3) 2,200 square feet and (4) 1,600 square feet plus 1,600 square feet. Exhaust steam pressure is 20 Psig. First cell vapors used on second cell, juice heaters and one pan.

Boilers -
The two boilers, 40,000 and 28,000 pounds per hour, operate at 260 Psig and 473°FTT (Avg). Both boilers have airheaters, and the furnaces are the pile burning type. Boiler feedwater temperature is in the 200 to 210°F. range. Flue gas CO_2 is reported to be in the 8 to 14 percent range.

Turbogenerators -
The factory has three backpressure steam turbine driven units and two hydroelectric units. The steam unit capacities are 2,000 kW, 750 kW and 600 kW. The units exhaust at 20 Psig, inlet pressure 260 Psig. The hydroelectric units are 290 and 300 KVA and produce 50 kW and 250 kW respectively year round

Tie Transformer -
No public utility tie-in transformer used for the factory.

Pans -
There are five vacuum pans with working volumes of 450 cubic feet, 350 cubic feet, 350 cubic feet, 350 cubic feet, and 300 cubic feet. The heating surface - working volume ratios are 1.6, 1.7, 1.7, 1.7 and 1.7, respectively.

Cooling Systems -
There are five juice heaters for mixed and clarified juices with the following heating surfaces: (1) 734 square feet, (2) 734 square feet, (3) 338 square feet, (4) 338 square feet and 392 square feet. There are two syrup heaters with 80 square feet each. First cell vapor and exhaust steam are used for heating.

APPENDIX C
BAGASSE FEEDER COMMENTS

Bagasse can be fed automatically by means of hoppers having counter-balanced flaps; however, it is better practice to have a Rotary Bagasse Feeder, as shown in the Figure, which will eliminate any unchecked entry of air into the furnace at a spot where it is not required and contributes practically nothing to the furnace combustion and serves only to greatly increase the amount of excess air. The feeder is composed of a drum having five compartments and partitions, so as to seal the discharge opening completely when revolving. The speed and size of the feeder drum depends on the volume of bagasse to be fired per hour. Lest any obstruction should enter the feeder the side (a) is mounted on the shaft and (b) is free to revolve thereon so that it will open and avoid breakage. Moreover, the feeder shaft is driven by a chain sprocket having a spring release clutch which will operate whenever a too heavy load is encountered.

Rotary Bagasse Feeder

C-1

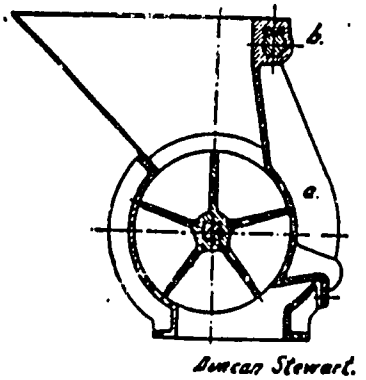

Rotary Bagasse Feeder.

Previous Page Blank

APPENDIX D
STEAM TURBINE COST DATA

Previous Page Blank

CBC INC

333 Uluniu Street, Suite #201, Kailua, Hawaii 96734
PHONE: (808) 263-8838 RCA Telex: 295876
FAX RADICOM: (808) 261-4778
MAILING ADDRESS: P.O. Box 602, Kailua, Hawaii 96734

November 13, 1989

Mr. William Kenda
3708 Lurline Drive
Honolulu, HI

SUBJECT: Coppus-Murray T-G Sets for Costa Rica

Dear Bill:

We are pleased to attach one copy of an eight page FAX, we have just received from Coppus-Murray, with the information you requested.

Yours truly,

Dave

Dave Holmes

CBC, Inc.

DH/smh
Enclosures

'89 11/10 11:37 ☎ 319 752 1616 MURRAY TURBO 01

COPPUS MURRAY

TO:

CBC, Inc.
Attn: Dave Holmes

FAX
(Page 1 of 8)

cc: Marc Deane
J. Popek

FROM: Judi Snyder

DATE: November 10, 1989

SUBJECT: William Kenda and Associates
TG Sets for Costa Rica Sugar Mills
Murray Ref: J10350

This relates to your October 23,1989 RFQ. Attached please find:

Tabulated Information
Features and Accessories
Condenser Description
Generator Control Description

Please advise if other than submitted is reuqired.

Regards,

Judi Snyder

JS:mc

Attachments

COPPUS® MURRAY TURBINE QUOTATION

November 10, 1989
Murray Ref: J10358

Tabulated Information

Selection	A	B
Inlet Pressure	15 PSIG	15 PSIG
Inlet Temperature	D&S	D&S
Exhaust Pressure	4" HgA	4" HgA
Power Output	500 KW	1000 KW
Steam Rate	30 LB/KWH	28.6 LB/KWH
Speed	3600 RPM	4000/1800 RPM
Turbine Frame	141UV4	RD5
Inlet Size (Single Valve)	10" LH	12" LH or RH
Exhaust Size	18" Down	30" Up or Down
Gear Model	---	Lufkin N1004 C or Equal
Gear Service Factor	---	1.3 Minimum
Gear Specification	---	AGMA 421.06
Generator Model	Kato or Equal	Kato or Equal
Generator Characteristics	3/60/480	3/60/480
Generator Bearings	Non-Pressure	Non-Pressure
Shipment	34 weeks	34 weeks
Budget Price Each		
TG Set	$250,000	$385,000
Extra Condenser (Loose)	$ 60,000	$ 90,000
Extra Generator Control (Loose)	$ 30,000	$ 30,000

COPPUS® MURRAY TURBINE QUOTATION

November 10, 1989
Murray Ref: J10358

FEATURES AND ACCESSORIES

The following features and accessories are included in our offering:

- Built in butterfly type trip valve for Selection A
- Single governor controlled inlet valve for Selection A
- Removable stainless steel steam strainer surrounding the governor valve for Selection A
- Separate Fisher type single governor controlled inlet valve arranged to close on trip for Selection B.
- Separate steam strainer for Selection B
- Woodward type UG NEMA Class D oil relay governor with motor operated speed changer
- Two manually operated handvalves for improved part load for Selection A
- Separate mechanical overspeed trip system
- Built-up rotor construction
- Sleeve type journal bearings
- Tilting-pad type thrust bearing
- Segmented carbon ring end gland seals
- Segmented carbon ring interstage seals
- Stainless steel spray on the shaft under the end gland zones
- Common structural steel baseplate under:
  - Turbine
  - Gear (Selection B)
  - Generator

COPPUS® MURRAY TURBINE QUOTATION

- Grease packed gear type high and low speed coupling plus low speed coupling for Selection B
- Pedestal type coupling guards
- Insulation and lagging around high temperature portions of turbine
- Sentinel warning valve mounted on exhaust casing
- Vacuum breaker
- Solenoid trip mechanism
- Electronic tachometer with:
  - -Local indicator
  - -Digital readout
- Freestanding pedestal type gageboard with 3 steam pressure gages, and tachometer indicator
- Pressurized lubrication/control oil system for turbine or turbine and gear including the following:
  - - Oil reservoir contained in baseplate with 3 minute retention time, and system components mounted on baseplate
  - -Main oil pump driven by turbine shaft orslow speed shaft of speed reduction gear
  - -Auxiliary oil pump driven by:
    - AC motor
  - -Shell and tube cooler(s) sized for 90°F cooling water:
    - Single
  - -Cartridge type oil filter(s) with 25 micron filtration:
    - Single
  - -Seamless carbon steel piping with flanged connections where practical
  - -Relief valves for oil pressure control
  - -One oil pressure gage for each pressure level

-Oil thermometers before and after coolers

-Oil reservoir level indicator

- 5 Sets of instruction manuals
- String testing of unit under full speed, no-load conditions with steam conditions as close to rated as our capabilities allow
- Composite outline drawing of turbine
- Export boxing

COPPUS® MURRAY TURBINE QUOTATION

November 10, 1989
Murray Ref: J10358

Condenser Description

Surface Condenser:

- 90°F Cooling Water
- 20°F temperature rise
- Carbon Steel shell and waterboxes
- Muntz tube sheets
- 3/4" x 18 BWG Admiralty Tubes

Accessories:

- Two stage single element ejector system with combined inner and after condenser
- Liquid level control
- Inlet expansion joint - stainless bellows with liner
  - flanged both ends
- Hotwell gage glass
- Atmospheric Relief Valve
- Air Leakage Meter
- Traps
- Condensate Pumps

1 SET OF MISCELLANEOUS CIRCUITRY AND TERMINALS

A) Emergency stop pushbutton

B) Terminal connections for the following external circuits:

1. Utility contacts to open circuit breaker, and to inhibit it from closing
2. Remote status lights to indicate circuit breaker position
3. Control valve to close when circuit breaker opens
4. Six pair of miscellaneous terminal connections.

PROTECTIVE RELAYS

1-Over/under voltage relay with separate over and under voltage lights, single phase (Basler model BE4-27/59 or equal)	DEV 27/59
1-Over/under frequency relay with separate over and under frequency lights (Basler model BE4-810/U or equal)	DEV 810/U
1-Loss of field excitation relay with light (Basler model BE2-40 or equal)	DEV 40
1-Common failure reset pushbutton	

OUTPUT CIRCUIT PROTECTION

1-Electrically operated fixed mounted breaker rated, 2000 ampere frame, 65,000 AIC @ 480 volt (Westinghouse Model DS-420 or equal) with position indicating lights and open close selector switch

INSTRUMENT TRANSFORMERS, for potential and current.

ASSEMBLY, WIRING, AND DRAWINGS, including:

Control wiring No. 14 copper stranded, coded and marked for identification
Terminal blocks - pressure type to permit entrance of any type wire
Mounting and wiring of voltage regulator and voltage adjust rheostat and on/off switch
Drawings for customer approval

INSTRUCTION MANUALS

Included in the system are two instruction manuals inclusive of the following:
--Schematic wiring diagram
--Individual manuals for system components

2	1	CONTROL SYSTEM FOR STEAM TURBINE-SYNCHRONOUS GENERATOR SETS, CONNECTED FOR PARALLEL OPERATION to be industrial grade, rated for 1250 KVA, 480 volts, 3 phase, 60 hertz, to include the following: ENCLOSURE 1-Type NEMA 1 enclosure, free standing, 12 gauge, general purpose construction for low voltage applications, approximate dimensions in inches 78"H x 30"W x 36"D. METERING INSTRUMENTATION 1-AC voltmeter, 3 1/2" sq, 2% acc, 90° rotation 1-AC ammeter, 3 1/2" sq, 2% acc, 90° rotation 1-Frequency meter, 3 1/2" sq, 5 reed type 1-Four-position voltmeter selector switch 1-Four-position ammeter selector switch 1-Wattmeter, 4 1/2" sq, 1% acc, 250° rotation Note: All 4 1/2" meters are Crompton model 077 or equal. 1-Varmeter, 4 1/2" sq, 1% acc, 250° rotation 1-Watthour meter, 2 stator, standard utility accuracy (G.E. Model DS-60 series) MANUAL SYNCHRONIZING AND CONTROLS FOR USE WITH CUSTOMER SUPPLIED HYDRAULIC GOVERNORS to include the following: 1-Automatic manual synchronizing switch 1-Governor raise lower switch 1-Sync check relay (Basler model BE4-25 or equal) 1-Synchronizing switch with removable handle 1-Reverse power relay with light, industrial type, (Basler model BE4-32 or equal) 1-Set of two synchronizing lights 1-Bus voltmeter, 3 1/2" sq, 2% acc, 90° rotation 1-Bus frequency meter, 3 1/2" sq, 5 reed type 1-Automatic synchronizer (Basler BE3-25A or equal) OPTIONS REQUIRED FOR MANUAL SYNCHRONIZING WITH A PUBLIC UTILITY to include the following: 2-Potential transformers (to monitor system bus) 1-Var/power factor controller (Basler model SCP-250). 1-Motor operated potentiometer for auto regulator 1-Over under excitation limiter SHIPMENT:_____ weeks after receipt of formal purchase order.

"Price Escalation. All orders shipped 90 days beyond a published price increase will be subject to a maximum increase of 2½ per month."

KATO ENGINEERING
A DIVISION OF RELIANCE ELECTRIC CO.

TELEFAX MESSAGE

TO Honolulu, Hawaii ATTN: Dave Holmes

TELEFAX NUMBER (808) 261-4778 DATE: April 30, 1990

SUBJECT: William Kenda/Costa Rica Projects

SHEET 1 OF 1 INCLUDING THIS SHEET

SIGNED John Graham Murray Ref: 609186

Response to your May 25 phone call.

Turbine Frame	RJD6M2	K68
Selection	A	B
Inlet PSIG	200	200
Inlet °FTT	550	460
Exhaust "HgA"	3.0	3.0
KW	3750	625
Turbine/Generator RPM	4500/1800	6500/1800
Steam Rate, LB/KM/HM	13.1	15.8
Inlet/Exhaust Size	8"/36"	4"/20"
Gear S.F.	1.3	1.3
Generator Voltage	4160	480
Generator Type	Synch.	Synch.
Generator Exclosure	TEWAC	O.D.P
Current Shipment, Wks	45	40
Estimated Price	$720,000	$260,000

1. Switchgear and condenser are to be provided by others.

2. Prices include turbine, gear, and generator mounted on common baseplate.

TELEFAX MESSAGE

TO Honolulu, Hawaii ATTN: Dave Holmes

TELEFAX NUMBER (808) 261-4778 DATE: April 30, 1990

SUBJECT: William Kenda/Costa Rica Projects

SHEET 1 OF 1 INCLUDING THIS SHEET

SIGNED John Graham Murray Ref: 609186

Response to your May 31 FAX.

Section	C
Turbine Frame	RD2
Inlet Psig	450
Inlet °FTT	660
Exhaust PSIG	200
KW	3750
Turbine/Generator RPM	5000/1800
Steam Rate	61.6 LB/KW/HR.
Exhaust Temperature	520°F
Inlet/Exhaust Size	10"/12"
Gear S.F.	1.3
Generator Type	Synch./4160 Volt/3PH/60
Generator Enclosure	TEWAC
Current Shipment	45 Wks
Estimated Price	$690,000

1. Switchgear is to be provided by others.

2. Price includes Turbine/Gear, and generator all mounted on a common baseplate.

TELEFAX MESSAGE

TO Honolulu, Hawaii ATTN: Dave Holmes

TELEFAX NUMBER (808) 261-4778 DATE: April 30, 1990

SUBJECT: William Kenda/Costa Rica Projects

SHEET 1 OF 1 INCLUDING THIS SHEET

SIGNED John Graham Murray Ref: 609186

Response to your June 2 FAX

Section	A	B	C
KW	3750	625	3750
Voltage	4160	480	4160
Condensing Pressure	3.0" HgA	3.0" HgA	
Cooling Water	90°F	90°F	
Approx. Add for:			
Generator Switchgear	$65,000	$30,000	$65,000
Condenser	$130,000	$40,000	

APPENDIX E
STACK OR FLUE GAS DUCT TEMPERATURE RECORDER

Previous Page Blank

BERKLEY ENGINEERING
& EQUIPMENT CO., INC.

(808) 845 9377
POST OFFICE BOX 3856 HONOLULU, HAWAII 96812

No. 89-171

Please refer to this number when ordering

QUOTATION

DATE October 31, 1989

FROM OFFICE AT Honolulu

TO Kench Inc.-Texas
3703 Lurline Drive
Honolulu, HI 96816

ATTENTION OF Mr. William Kenda

YOUR INQUIRY Stack Temperture Recorder

PRICES f.o.b Honolulu

TERMS Net 30 days

SHIPMENT Shipment against irrevocable letter of credit or prepaid

SHIPPING WEIGHT 3-4 weeks

BERKLEY ENGINEERING & EQUIPMENT CO., INC.

BY Peter U. Hansen

This Quotation is subject to the conditions printed on the reverse side of this sheet.

QUOTATION FROM BERKLEY ENGINEERING & EQUIPMENT CO., INC.

TO Kench Inc.-Texas No 89-171 Sheet 1 Date 10/31/89

APPARATUS HEREIN ENUMERATED WILL BE FURNISHED UNDER THE CONDITIONS PRINTED ON THE REVERSE OF SHEET 1, UNLESS EXPRESSLY EXCEPTED HEREIN

ITEM	QUAN.		PRICE
1	1	Telog Model 2105 Type K Thermo Couple Temperature Recorder complete with 36" Type K thermocouple and 25 ft. extension wire.	
	1	Software package and recorder to PC cable, 9 pin RS-232C.	
			$718.00
		ALTERNATE	
2	1	PTC Model 620 Recording Stem Thermometer with 60" stem. Range 300-[illegible]0 Fahrenheit, 24 hour chart drive.	
			$315.00
		Accessory: #620.84ss stainless steel gland.	
			$ 44.95

Model 620
Chart Recording Stem Thermometer

PTC®'s Model 620 Chart Recording Stem Thermometer makes a permanent record over 24-hour or 7-day periods. The instrument comes complete with clock and an initial supply of 100 charts.

This thermometer is for any application requiring the use of an immersion stem, when a time temperature record is needed. It is available in several combinations of temperature ranges and stem lengths (see Specifications).

The spring wound chart drive is nonexplosive. One full winding is enough to drive the chart 20% beyond its full recording range--whether 24-hour or 7-day. Each clock is a dependable, high-grade mechanism, which has been electronically timed at our plant for accuracy. Because it is spring activated, it will operate in extreme temperatures (from -70°F to +240°F) where batteries fail.

The stainless steel stylus never needs ink or replacing. The 3-1/4" diameter paper charts are pressure sensitive and plastic coated in white. Time and temperature graduations are printed in blue. The stylus traces a time temperature recording on the chart.

The instrument can be mounted on panels, walls, bulkheads, etc., by means of an accessory Mounting Bracket (Part No. 585.84). For mounting in pipelines, tanks, or ovens a 1/2" NPT Packing Gland fitting (Part No. 620.84SS) is available as an accessory. The fitting is rated to 200 psi and can be positioned anywhere on the stem (at least 12" from the bottom end). The packing gland is made of stainless steel.

It is a very substantially built instrument but is not to be used unprotected in a high humidity environment. The stem can be used in wet or moist locations, however, the clock case and head of the instrument should be placed in a sealed plastic bag if subjected to wet or humid atmospheres. Please state stem length, temperature range, and time range when ordering.

The stems are 7/16" (1.1 cm) in diameter and are made of type 304 stainless steel. The stems are rigid and must not be bent. Note: The minimum immersion length in liquids is 8", and for gases, the minimum is 12".

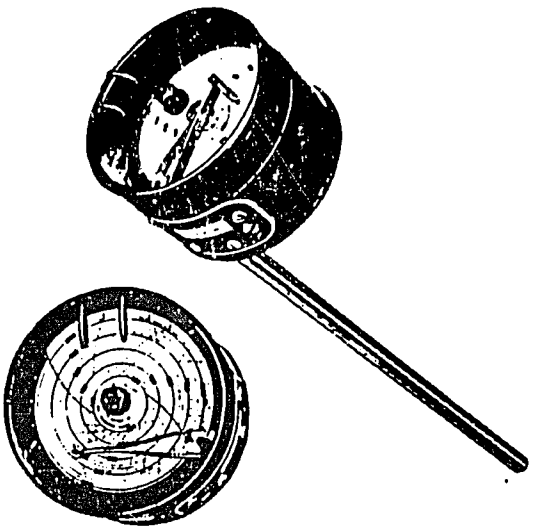

SPECIFICATIONS

1. Available temperature & time ranges:

-100°F	to	+120°F:	24-hour	or 7-day
0°F	to	420°F:	24-hour	or 7-day
20°F	to	220°F:	24-hour	or 7-day
180°F	to	380°F:	24-hour	
300°F	to	720°F:	24-hour	
-4°C	to	+105°C:	7-day	
-20°C	to	+215°C:	7-day	

2. Available stem lengths ..... 12", 15", 18", 24", 36", 48", 60".
3. Chart diameter .....3-1/4 in. (8.3 cm).
4. Accuracy ..... ±2% of full scale.
5. Dimensions:
   Diameter.....3-13/16 in. (9.7 cm).
   Height .....3-1/4 in. (8.3 cm).
6. Weight (depends upon the stem length):
   with 12" stem .....1-1/2 lbs. (0.7 kg).
   with 60" stem ... 2 lbs. 5 oz. (1.1 kg).
7. Shipping weight:
   with 12" stem .....3 lbs. (1.4 kg).
   with 60" stem .....6 lbs. (2.7 kg).
8. Finish .....black anodized aluminum.

The Model 620 Recording Stem Thermometers are all made to order. Please be certain of your specifications. Credit cannot be given for returned instruments.

PTC® INSTRUMENTS

THERMOCOUPLE RECORDER
Model 2105

FEATURES

- Records Temperature History of Thermocouple Sensors
- Computer Compatible Output Data —IBM PCs, Portables, Etc.
- 18 Month Battery Life
- Rugged Watertight Construction

The Telog Thermocouple Recorder provides an accurate, reliable and economical means of obtaining a time history of temperature data in environmental and industrial applications.

The Model 2105 is an electronic recording unit that directly interfaces two-wire thermocouple sensors and performs automatic cold-junction compensation and linearization of the T/C signal. The recorder converts its measurements to a series of amplitude data values stored in solid state memory.

Data stored in the 2105 can be transferred to the user's computer to display, archive or produce report-ready, hard-copy records. Data can be transferred from recorder to computer by either direct RS-232 connection or by use of the portable Data Transfer Unit, Model A-201. Information on supported computers and capabilities is provided in the Telog 2100 Series Family Brochure.

Sampling the input signal once per second, the recorder will compute and save up to 1600 averages, minimums or maximums. The user selects the desired statistics and computation interval which ranges from 1 second to 18 hours. For example, if the hourly average and maximum temperature are saved, 33 days of data will be recorded. When the recorder's memory reaches capacity, it begins to overwrite

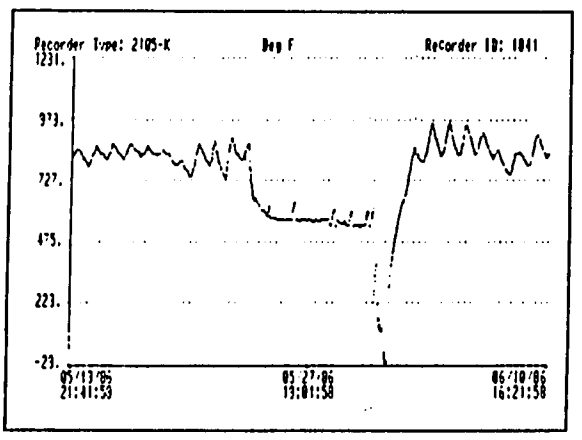

Typical Output Record

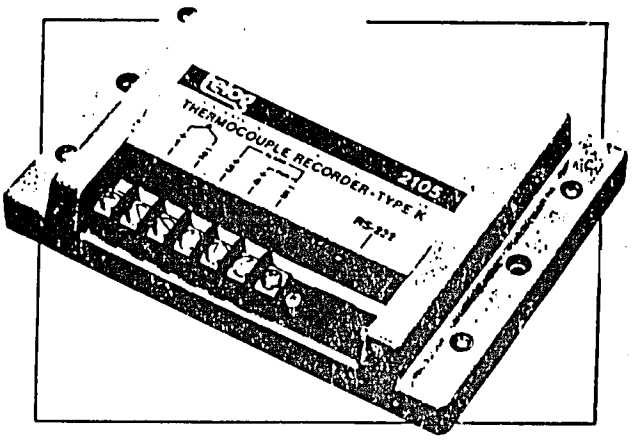

the oldest data with new data. The data transferred to the computer is therefore always the most recent.

There is also an alarm output which can be used to control an external relay or interrupt a computer if the input signal, goes above or below user-programmed thresholds. It operates as an electronic switch to ground.

Two small lithium batteries will operate the recorder for 18 months. It can also operate from external 10 to 28 vdc power in which case the internal batteries will provide back-up power for 5 years. Batteries can be easily changed with the aid of a screw-driver.

Except for battery replacement, the recorder is maintenance-free. There are no user accessible controls or adjustments requiring user attention. Programmed parameters are transferred to the recorder's memory when connected to the user's computer.

The Telog 2105 offers many advantages over traditional chart recorders and data acquisition systems. The unit is small, rugged, watertight, self-powered, and maintenance-free. The computer-generated output records are time-correlated, scaled, annotated and report-ready.

MEASUREMENT

- Two Measurement Ranges Available:
  Type J T/C, Model 2105-J,
  -210° to +760°C
  Type K T/C, Model 2105-K,
  -270° to +1370°C
- Automatic Cold-Junction Compensation and Amplitude Linearization.

Model 2105

SPECIFICATIONS

MEASUREMENT

Input	Two Wire Thermocouple	
Models	2105-J	2105-K
Range	-210 to +760°C	-270 to +1370°C
Resolution	1.0°C	1.6°C
Accuracy	±2.5°C	±3.5°C

RECORDING

Sample Rate	1 per second
Clock Accuracy	0.01%
Memory Size	1600 data values

ALARM

Type	FET switch to ground
Maximum Voltage	30 volts
Maximum Current	100 ma
ON/OFF Impedance	10 ohm/1 Megohm

SERIAL INTERFACE

Type	RS-232C compatible. Requires RTS
Baud Rates	300, 1200, 9600; auto-selected
Bit Format	1 start, 8 data, 1 stop
Connector	9 pin Sub 'D' socket

POWER

Battery Type	2 lithium 3v, 1A-Hr Duracell #DL-2N or Sanyo #CR-2N
Operating Life	16 months @ 25 C or above 12 months @ -25 C
Battery Shelf Life	5 years
External Power	10 to 28 vdc @ 5ma

ENVIRONMENTAL & MECHANICAL

Operating Temp.	-25 to +60°C
Storage Temp.	-40 to +70°C
Humidity	0 to 95% non-condensing short term complete immersion in water
Size	4.3" x 6" x 1"
Enclosure Material	Zinc-Aluminum
Weight	2 lbs

PROGRAMMABLE PARAMETERS

Interval Period	1 to 65535 seconds (18.2 hours)
Interval Resolution	1 second
Computed Data	any combination of the average, minimum or maximum per-interval
Calendar Time	mo/day/yr hr:min:sec
Alarm Thresholds	High and/or Low Alarm 8 bit resolution
Unit ID Number	4 digit alpha-numeric

SPECIFICATIONS SUBJECT TO CHANGE WITHOUT NOTICE

Berkley Engineering & Equipt Co. Inc.
(808) 845-9377 (fax) 845-9370
944 Akepo Lane
Honolulu, HI 96817

Model 2105 MOUNTING DIMENSIONS

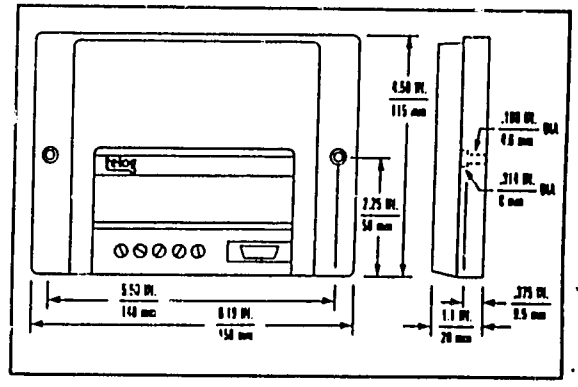

FUNCTIONAL CONNECTION DIAGRAM

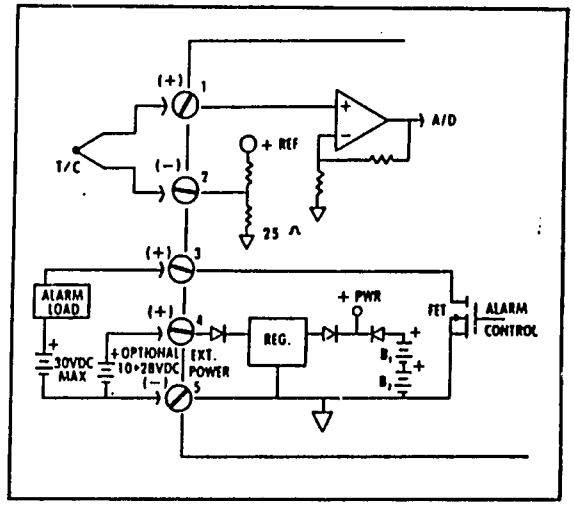

ORDERING GUIDE

Models	Measurement Range
R-2105-J	-210° to +760°C
R-2105-K	-270° to +1370°C

Contact factory for Custom Ranges

Telog Instruments Inc.
2 Drumlin Square
West Henrietta, N.Y. 14586
Phone: 716-359-1110

APPENDIX F
TRANSFORMER AVAILABILITY AND COST DATA

CONTINENTAL
TRANSFORMER
COMPANY

SINCE 1946

12745 NEWTON PLACE • WEST PALM BEACH, FLORIDA 33414 • PHONE (407) 793-8432
TELEX 62598250 or 757693 • FAX (407) 798-9140 or (407) 798-5521

Compañia Continental de Transformadores
Compagnie Continentale de Transformateurs
Kontinentale Transformatie Maatschappij

KENNECH INC / TEXAS HONOLULU

WILLIAM KENDA 1 808 949 7638

****

THANK YOU FOR THE INQUIRY. SUBJECT TO PRIOR SALE, WE OFFER
RE-MANUFACTURED NAMEBRAND TRANSFORMER(S) WITH

PLUS OUR 5-YEAR BUY BACK PLAN

NON-PCB OIL PLUS OUR 5-YEAR BUY BACK PLAN

(1) 500 KVA 3-PH STATION TYPE 13200 DELTA TAPS 480Y/277

$ 7195 FOB MIAMI FL 2-3 WEEKS

==========

(1) 1000 KVA 3-PH STATION TYPE HV 12470 DELTA TAPS LV 480Y/277

$ 11,200 FOB MIAMI 2-3 WEEKS

==========

FOLLOWING UNIT WILL HAVE ALL NEW COPPER WINDINGS

2000 KVA 3-PH STATION TYPE 12470 DELTA TAPS 480Y/277

$ ~~5000~~ 20,000 FOB MIAMI FL 8-10 WEEKS

==========

(3) 167 KVA 1-PH RECONDITIONED 12470 DELTA TAPS LV 277/480Y

$ 1850 EA FOB MIAMI 2-3 WEEKS

****

WAYNE JOHNSON 11 09 89

CONTINENTAL
TRANSFORMER
COMPANY

SINCE 1946

12745 NEWTON PLACE • WEST PALM BEACH, FLORIDA 33414 • PHONE (407) 793-8432
TELEX 62598250 or 757693 • FAX (407) 798-9140 or (407) 798-5521

Compañia Continental de Transformadores
Compagnie Continentale de Transformateurs
Kontinentale Transformatie Maatschappij

MR WILLIAM KENDA 1 808 949 7638
****

RE: OUR QUOTATION DATED 11 08 89

AS U CAN SEE, IT'S OBVIOUS SOMEONE HERE MADE A TYPOGRAPHICAL ERROR ON ITEM (3) WHICH IS A 2000 KVA UNIT

SHE TYPED COST $ 5,000 FOB MIAMI (THE 1000 KVA JUST ABOVE COST YOU $ 11,200!)

SHOULD HAVE HAVE BEEN $ 20,000 FOR THE 2000 KVA UNIT

SORRY ABOUT THE ERROR.

WAYNE JOHNSON 11 09 89

CONTINENTAL
TRANSFORMER
COMPANY

SINCE 1946

12745 NEWTON PLACE • WEST PALM BEACH, FLORIDA 33414 • PHONE (407) 793-8432
TELEX 62598250 or 757693 • FAX (407) 798-9140 or (407) 798-5521

Compañia Continental de Transformadores
Compagnie Continentale de Transformateurs
Kontinentale Transformatie Maatschappij

KENECH INC

WILLIAM KENDA / HONOLULU 1 808 949 7638
****

THANK YOU FOR THE INQUIRY. SUBJECT TO PRIOR SALE, WE OFFER
RE-MANUFACTURED NAMEBRAND TRANSFORMER(S) WITH

NEW COPPER WINDINGS INDUSTRY'S ONLY 5-YEAR WARRANTY
NON-PCB OIL PLUS OUR 5-YEAR BUY BACK PLAN

(1 OR MORE) 333 KVA 1-PH STATION TYPE

12470 DELTA TAPS 480 WYE

$ 3875 EACH FOB MIAMI 3-4 WEEKS
****

(1 OR MORE) 667 KVA DITTO ABOVE

$ 7445 EACH FOB MIAMI 4-5 WEEKS
****

IF U NEED MORE INFORMATION, LET US KNOW.

THANKS WAYNE JOHNSON 11 10 89

FIVE YEAR WARRANTY

This electrical equipment sold by CONTINENTAL TRANSFORMER COMPANY, hereinafter referred to as "CONTINENTAL" is guaranteed for a period of five (5) years to perform in accordance with the nameplate specifications if operated under rated load, voltages, usage, conditions and competent supervision, subject to limitations hereinafter set forth.

Any defects in material or workmanship shall be repaired or replaced, at the option of Continental by Continental FOB at a plant designated by Continental.

The warranty period commences at the time of sale and terminates sixty (60) months from the time of sale.

If this equipment should fail under normal conditions, as outlined above, at any time within the first twelve months there will be no charge for repairs or replacement. After the twelfth month the warranty shall be pro-rated over a sixty month period at the rate of 1/60 for each month or part thereof of ownership based upon the original purchase price. The customer shall be responsible for the number of months of ownership as it relates to sixty months.

The completion of repairs by Continental does not act as a recommencement of the warranty period.

Continental shall not be responsible for consequential losses or damages outside of the equipment, nor for repairs or replacements made other than Continental without written authorization by Continental. This warranty is not transferable.

Continental shall not be responsible for damages caused by wind or lightning or any other acts of God or for damages caused by vandalism.

Correction of defects by Continental shall constitute fulfillment of all Continental's obligations to the customer.

CONTINENTAL
TRANSFORMER
COMPANY

APPENDIX G
PLANNED REVISIONS IN COGENERATION POWER PROGRAM AT EL PALMAR

Introduction

After the recent visit to Costa Rica of Mr. John P. Kadyszewski, USAID Bioenergy Systems & Technology Project, the writer was advised that El Palmar proposed to increase factory capacity and install a higher pressure boiler rather than install economizers on the two 60,000 lbs/hr boilers in order to obtain additional boiler capacity. It was suggested that the writer comment on the plans and correspond directly with El Palmar.

Expansion Plans

(1) An Additional three roller mill with a steam turbine drive. Location and size of mill not indicated.
(2) Install 450 Psig, 600 degrees F (?) 100,000 lbs/hr boiler.
(3) Install 450 Psig turbogenerator, extracting or exhausting at 175 Psig.
(4) It is assumed some other factory stations will be enlarged in order to process the additional material produced by an average milling rate of 160 tonnes cane per hour.

Factory Problem Areas

(1) Milling
  (a) Constant speed mill drives.
  (b) Low mill roll surface areas (both top roll and total) per ton of cane or fiber milled per hour.
  (c) Low maceration and high bagasse pol and moisture.

(2) Boiling House
  (a) Low evaporator capacity.
  (b) Centrifugal capacity problems particularly when producing white sugar with probable excessive dilution of the run-off molasses being recycled to the pan floor.
  (c) Low boiling house and overall factory recovery.

(3) Power House
  (a) Existing back pressure turbogenerators (BPTG) have a high steam rate, averaging 36.75 pounds of steam (175 PSIG, 470°FTT) per kilowatt hour. Also there are no performance curves available to indicate how

Previous Page Blank

rapidly the steam rate increases when the turbogenerators are partially loaded.

(b) Present boiler capacity is low and boiler stack gas carbon dioxide is low which indicates probable high excess air usage and/or poor bagasse combustion.

Recommendations

1. Milling Plant — The steam turbine for the new mill should have a steam rate of 25 lbs/hph or less, and be equipped with sufficient hand valves for over load and under load operating conditions. The turbine design horsepower should be in the 600 to 650 hp range.

   — Consideration should be given to using a 450 Psig turbine or preferably an electric motor drive using a DC motor with the AC supply rectified by thyristor to DC power. DC speed variation is equal to that of the turbine but with the capability of maintaining an overall efficiency of about 90 percent at all speeds.

   — The additional mill of 35"x66" will give a fiber milling rate of 10.2 and a tonnes of cane per hour/Total Roll Surface of 4.5; with a 36"x72" mill this will improve to 10.0 and 4.6; with a Donnelly intermediate carrier chute and a pressure feeder five roll 36"x72" these values will improve to 8.3 and 5.2; the latter two figures being within normally accepted ranges for adequate milling capacity. Cast steel housing three roller mills can be converted to pressure feeder five roll mills using a Donnelly chute by Service Foundry, Inc. of New Orleans, La., USA, Dedini of Brazil, Walker of Australia and Fletcher-Stewart of England. The five-roller mill should be the last mill in the tandem where it can effectively reduce bagasse pol and moisture even when using 200 percent maceration on fiber. At the high fiber milling rate contemplated, the feed roll of each mill should have Messchaert juice grooves to facilitate juice removal from the mills. Back or delivery rolls may also be fitted with messchaert juice grooves, if desired, for further mill performance improvement. All mill circumferential grooving should have an angle of 45 to 50 degrees. Messchaert grooves have been found to increase mill capacity, by rapidly removing the juice, and to improve mill extraction and lower bagasse moisture content. The factory objective should be a bagasse pol in the 2.0 to 2.5 percent range and a bagasse moisture of 48 to 50 percent.

2. Boiling House — Using three stage juice and vacuum pan heating by the evaporators, as shown for El Palmar in a recent report by the writer, for 160 TCH and 200 percent maceration on fiber, a total of 36,800 square feet of evaporator heating surface would be required and 17,960 square feet for the juice heaters. Juice heaters would require spares for cleaning while operating the factory. The

evaporators would require 162,200 lbs/hr of 15 Psig exhaust steam; syrup heating, miscellaneous and losses 9,500 lbs/hr.

3. Power House — General power generation data are:
   (a) 160 tonnes cane per hour; 280,000 tonnes annually.
   (b) 1750 hrs milling; 556 hrs downtime including holidays.
   (c) 15.4 percent fiber on cane or 24.64 tonnes per hour.
   (d) Tonnes bagasse per hour as fuel 52.5 tonnes per hour.
   (e) Total steam required 100,000 lbs/hr at 450 Psig and 113,000 lbs/hr at 175 Psig for 213,000 lbs/hr total.
   (g) 7,700 lbs/hr 175 Psig steam to sugar dryer and miscellaneous and 12,500 lbs/hr to new mill turbine.
   (h) 7,500 lbs/hr 15 Psig steam to boiler feedwater heating (BFW) and miscellaneous.
   (j) Grinding time bagasse 81,900 tonnes (46.8 tonnes/hr); downtime bagasse 9,975 tonnes (17.9 tonnes/hr).

4. Power Generation Options — There are three power generation options available in which some power generation is obtained from the existing back pressure turbogenerators. The three options are:

   (a) Topping Turbine (45/175 Psig) in conjunction with a new 175 Psig condensing turbogenerator and the present turbogenerators (See Enclosure I).
   Total Kilowatt hours Exported — **8,519,602 kWh**.

   (b) Single Automatic Extraction Condensing Turbogenerator (450/175 Psig/4" Hg Abs) in conjunction with present turbogenerators (See Enclosure II).
   Total Kilowatt hours Exported — **8,649,410 kWh.**

   (c) Double Automatic Extraction Condensing Turbogenerator (450/175/15 Psig/4" Hg Abs) in conjunction with present turbogenerators (See Enclosure III).
   Total Kilowatt hours Exported — **9,280,674 kWh**.

5. General Comments on Power Options — All of the options are applicable to El Palmar if suitable used units are available.

   Topping Turbine Options — Both new units, the 2,000 kW topping unit (BPTG) and the 2,000 kW condensing unit are simple much used equipment easily adaptable to factory steam and power conditions. If the topping turbine has problems, the condensing turbogenerator can use the 450 Psig steam after it passes

through the pressure reducing valve (PRV) and the desuperheater (DSH). These units will probably be more readily available on the used equipment market. The only disadvantage of this option is that the system relies more heavily on the existing lower efficiency turbogenerators.

Single Automatic Extraction Option — This unit will, if operated within the design maximum and minimum steam flows, provide more power than the previous option because of the inherent greater efficiency. If the unit fails during operations, there would be a greater power loss than would be realized by a failure of the topping turbine in the previous option. This unit would have to be fitted more closely to the anticipated steam flows; hence, it is important that all performance curve data be studied before purchasing a unit. The performance curve is included primarily to indicate information requirements.

Double Automatic Extraction Option — While this option provides the greatest power production, it has the most complex and sensitive equipment. It must be fitted more closely to steam flow conditions; hence, it is very important that all flow limits of any proposed new equipment be thoroughly studied. Applicable performance curves are very necessary. If a failure occurs in this unit, the loss of power production is the greatest of the three options. The enclosed performance curve is included primarily for the purpose of indicating the performance information requirements if such a unit is purchased.

6. Conclusion

The enclosed steam and power diagrams indicate El Palmar has the potential to export 8,000,000 to 10,000,000 kWh annually if they install a 100,000 lbs/hr 450 Psig, 600°FTT boiler. The question remaining unanswered is whether or not reliable used equipment necessary for this production can be purchased and installed at a cost sufficiently low to make the investment economically attractive. As has been indicated in previous studies for Costa Rican power cogeneration, the short harvest period and limited crop size limit the amount of investment that can be made to economically generate power for export. In addition to the estimated cost of $185,000 previously made for transformers and electrical switchgear — ICE interconnection equipment, it is estimated that an additional $150,000 for switchgear would be needed for the increased power delivery.

William Kenda
October 6, 1990

Enclosure I

EL PALMAR 160 TCH
Topping Turbine Alterntive 450 PSIG 600 °FTT Inlet/Exhausting 175 PSIG

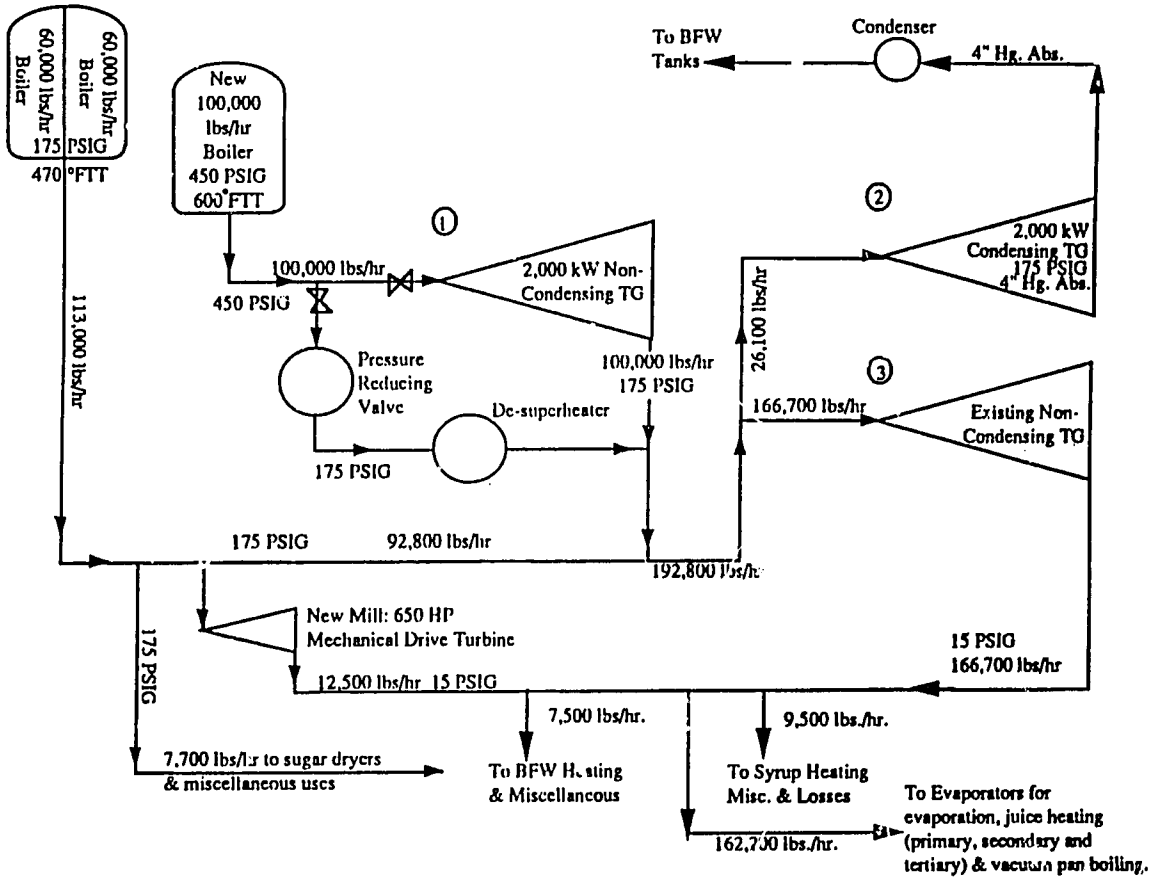

A. GRINDING TIME POWER GENERATION & kWh EXPORT (1750 HRS.)

	Rated Capacity	Throttle Flow lbs/hr	kW Generated	kWh Generated
①	2,000 kW BPTG	100,000	1,795	3,141,250
②	2,000 kW Condensing	26,100	1,742	3,048,500
③	3,000 & 1,500 kW BPTG's	166,200	4,536	7,938,000
			Total	14,127,750
			Ingenio Power Requirements	-7,717,500
			Power Exported	6,410,250 kWh
			Average kW Exported	3,663

B. DOWNTIME POWER GENERATION & kWh EXPORT (556 HRS.)

①	2,000 kW BPTG	82,886	1,488	827,328
②	2,000 kW Condensing	29,186	1,946	1,081,976
③	1,500 kW Existing BPTG	53,700	1,461	812,316
			Total	2,721,620
			Ingenio Power Requirement	-612,268
			Power Exported	2,109,352 kWh
			Average kW Exported	3,794

C. TOTAL kWh EXPORTED 8,519,602 kWh

Enclosure II

EL PALMAR 160 TCH

Single Automatic Extraction Condensing Turbogenerator Alterntive 450 PSIG 600 °FTT/Extracting 175 PSIG Condensing 4" Hg. Abs.

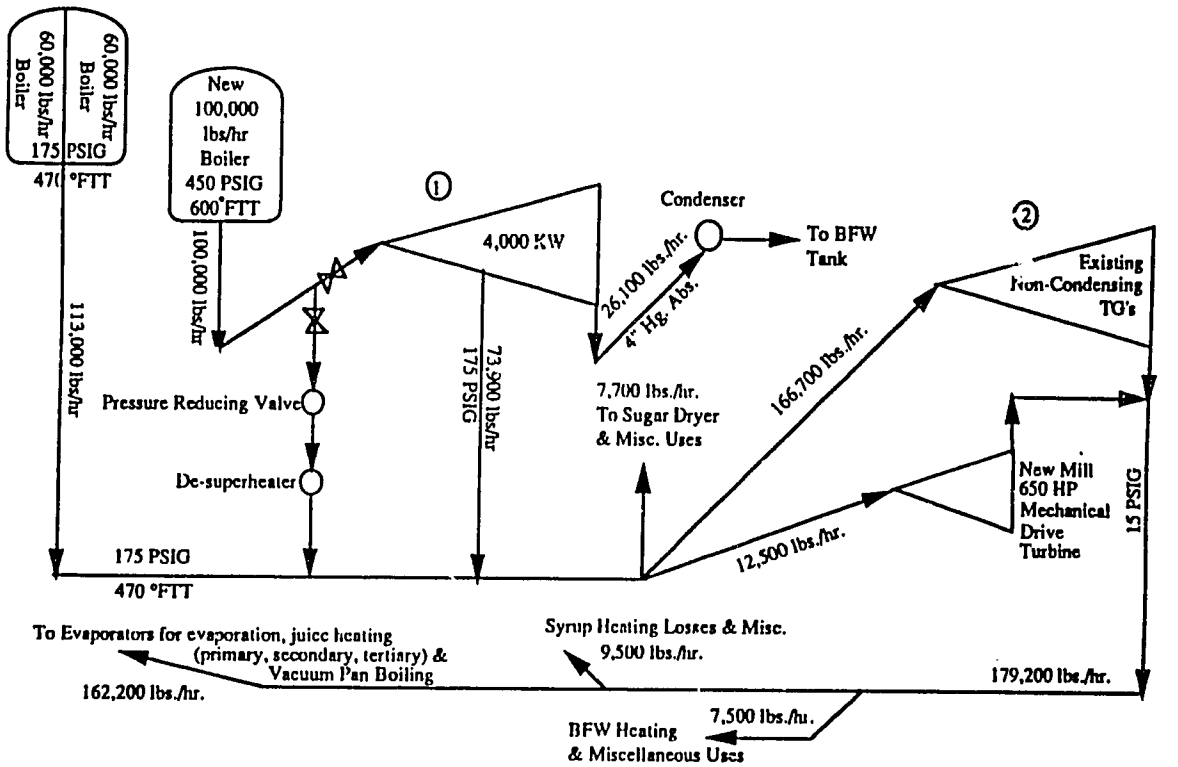

A. GRINDING TIME POWER GENERATION & kWh EXPORT (1750 HRS.)
(Data taken from Performance Curve I and Adjusted for Estimated kW)

	Rated Capacity	Throttle Flow lbs/hr	Extraction lbs./hr. (175 PSIG)	kW Generated	kWh Generated
①	4,000 kW	100,000	73,900	3,600	6,300,000
②	4,500 kW	166,700	0	4,536	7,938,000
				Total	14,238,000
				Ingenio Power Requirements	7,717,500
				Power Exported	6,520,500 kWh
				Average kW Exported	3,727

B. DOWNTIME POWER GENERATION & kWh EXPORT (556 HRS.)
(Data Taken from Performance Curve I and Adjusted for Estimated kW)

①	4,000 kW	82,886	53,000	3,488	1,939,328
②	1,500 kW	53,000	0	1,442	801,850
				Total	2,741,178
				Ingenio Power Requirement	-612,268
				Power Exported	2,128,910 kWh
				Average kW Exported	3,829

C. TOTAL kWh EXPORTED 8,649,410 kWh

Enclosure III

EL PALMAR 160 TCH

Double Automatic Extraction Condensing
Turbogenerator Alternative

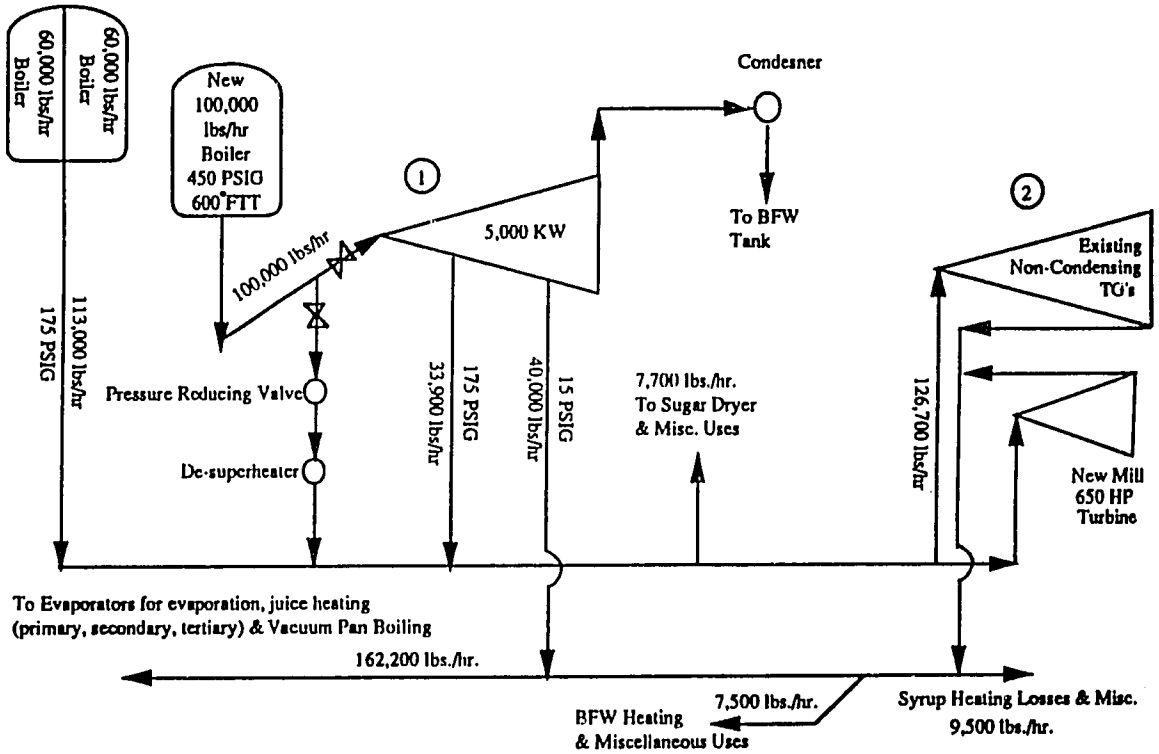

A. GRINDING TIME POWER GENERATION & KWH EXPORT (1750 HRS.)
(Data taken from Performance Curve II and Adjusted for Estimated Kw)

	Rated Capacity	Throttle Flow lbs/hr	Extraction lbs./hr. 175 PSIG	15 PSIG	KW Generated	KWH Generated
1	5,000 KW	100,000	33,900	40,000	5031	8,804,250
2	3,500 KW	26,700	0	126,700	3448	6,034,000
				Total		14,868,250
				Ingenio Power Requirements		7,717,500
				Power Exported		7,150,750
				Average KW Exported		4,086

B. DOWNTIME POWER GENERATION & KWH EXPORT (556 HRS.)
(Data Taken from Performance Curve II and Adjusted for Estimated KW)

1	5,000 KW	82,886	10,000	43,000	4,660	2,590,960
2	1,500 KW	10,000		10,000	272	151,232
				Total		2,742,192
				Ingenio Power Requirement		-612,268
				Power Exported		3,129,924 KWH
				Average KW Exported		3,831

C. TOTAL KWH EXPORTED 9,280,674 KWh

Performance Curve I
Condensing & Single Extraction Turbogenerator

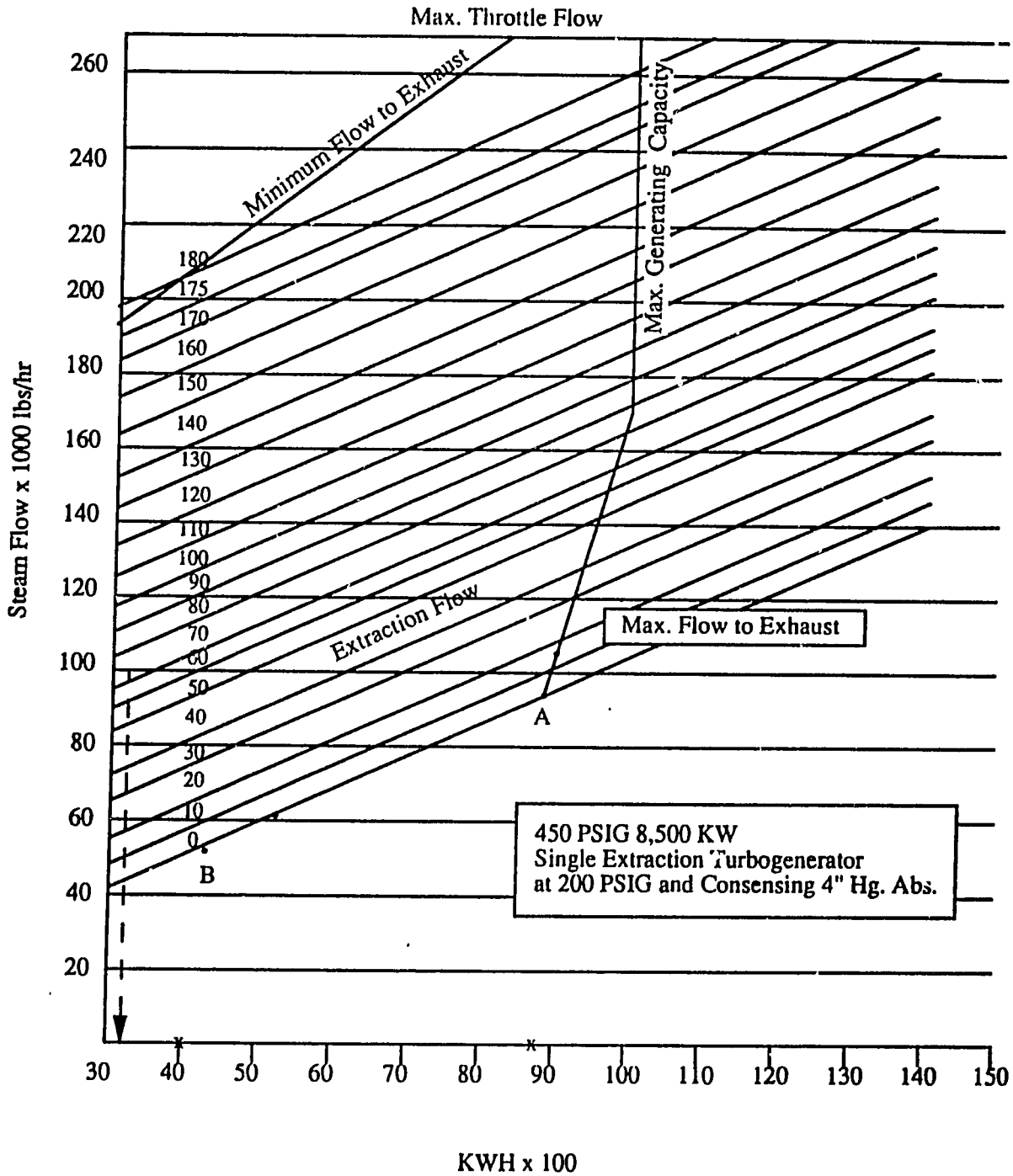

PERFORMANCE CURVE II

Double Extraction Turbogenerator

Inlet Pressure 400 PSIG, 700 °FFT Extraction 150 at 20 PSIG Exhaust Pressure 2" Hg. Abs.

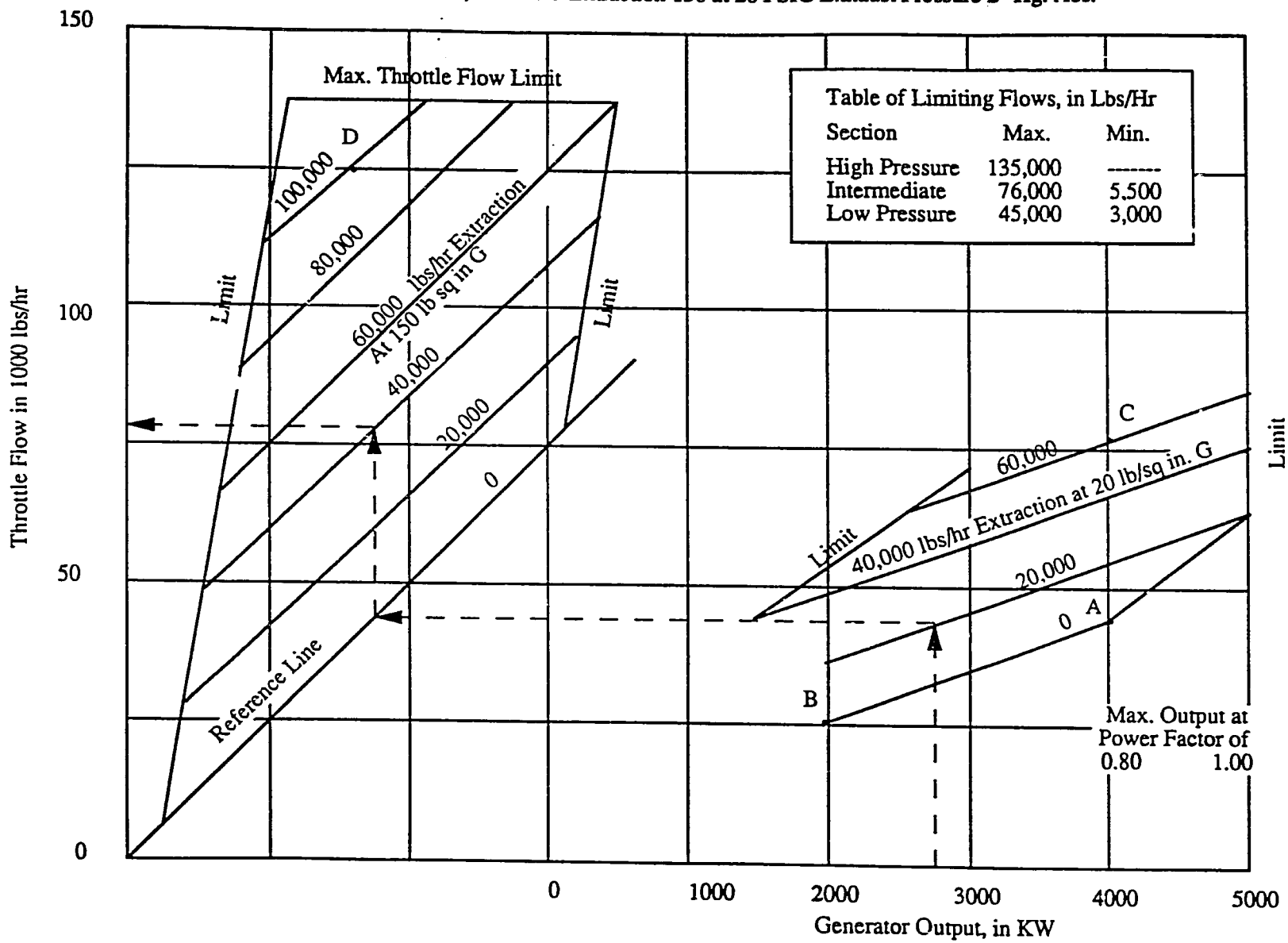

The Office of Energy

The Agency for International Development's Office of Energy plays an increasingly important role in providing innovative approaches to solving the continuing energy crises in developing countries. Three problems drive the Office's assistance programs: high rates of energy and economic growth accompanies by a lack of energy, especially power in rural areas; severe financial problems, including a lack of investment capital, especially in the electricity sector; and growing energy-related environmental threats, including global climate change, acid rain, and urban air pollution.

To address these problems, the Office of Energy leverages financial resources of multilateral development banks such as The World Bank and the InterAmerican Development Bank, the private sector, and bilateral donors to increase energy efficiency and expand energy supplies, enhance the role of private power, and implement novel approaches through research, adaptation, and innovation. These approaches include improving power sector investment planning ("lease-cost" planning) and encouraging the application of cleaner technologies that use both conventional fossil fuels and renewable energy sources. Promotion of greater private sector participation in the power sector and a wide-ranging training program also help to build the institutional infrastructure necessary to sustain cost-effective, reliable, and environmentally-sound energy systems integral to broad-based economic growth.

Much of the Office's strategic focus has anticipated and supports recently-enacted congressional legislation directing the Office and A.I.D. to undertake a "Global Warming Initiative" to mitigate the increasing contribution of key developing countries to greenhouse gas emissions. This strategy includes expanding least-cost planning activities to incorporate additional countries and environmental concerns, increasing support for feasibility studies in renewable and cleaner fossil energy technologies that focus on site-specific commercial applications, launching a multilateral global energy efficiency initiative, and improving the training of host country nationals and overseas A.I.D. staff in areas of energy that can help to reduce expected global warming and other environmental problems.

To pursue these activities, the Office of Energy implements the following seven projects: (1) The Energy Policy Development and Conservation Project (EPDAC); (2) The Biomass Energy Systems and Technology Project (BEST); (3) The Renewable Energy Applications and Training (REAT); (4) The Conventional Energy Technical Assistance Project (CETA); and (7) its follow-on Energy Technology Innovation Project (ETIP).

The Office of Energy helps set energy policy direction for the Agency, making its projects available to meet generic needs (such as training), and responding to short-term needs to A.I.D.'s field offices in assisted countries.

Further information regarding the Office of Energy's projects and activities is available in our Program Plan, which can be requested by contacting:

Office of Energy
Bureau for Science and Technology
U.S. Agency for International Development
Room 508, SA-18
Washington, D.C. 20523-1810
Tel: (703) 875-4052