WORKSHOP PROCEEDINGS

Urea-Based NPK Plant Design and Operating Alternatives

International Fertilizer Development Center
Muscle Shoals, Alabama USA
September 17-28, 1990

Edited by
James J. Schultz
George Hoffmeister

a

Library of Congress Cataloging-in-Publication Data

Urea-based NPK plant design and operating alternatives : workshop proceedings, International Fertilizer Development Center, Muscle Shoals, Alabama, USA, September 17-28, 1990 / edited by James J. Schultz, George Hoffmeister.

p. cm. -- (Special publication IFDC ; SP-15)

Includes bibliographical references.

ISBN 0-88090-094-6

1. Urea as fertilizer--Congresses. I. Schultz, J. J., 1936- II. Hoffmeister, George. III. International Fertilizer Development Center. IV. Title: Workshop proceedings : urea-based NPK plant design and operating alternatives. V. Series.

TP963.4.U7U73 1991 91-4008

668'.6241--dc20 CIP

-b'

Acknowledgment and Thanks

The management of IFDC is grateful for the support and efforts of the large number of speakers and technical resource persons who freely gave of their time to participate in the workshop and share their experiences.

Furthermore, the workshop could not have been the success it was without the contributions of the many delegates who participated enthusiastically in the discussions on the technical information and data recorded in these proceedings.

Finally, we are indebted to the United Nations Development Programme (UNDP) for the financial assistance that made the workshop possible.

International Fertilizer Development Center
May 1991

Paul J. Stangel
President and Chief Executive Officer

Preface

The production of homogeneous granular NPK fertilizers is often surrounded by a mystique that perplexes those looking for a simple explanation of the strange phenomena often observed when manufacturing granular NPKs. The origin of this mystique can be found in the many variables involved in the granulation process, especially the large number of raw materials and combinations (formulations) that are routinely processed in a single plant. Add to this, variations in climatic conditions, equipment design configurations, and operator skill, and one can quickly see why the successful production of granular NPKs is often explained more in terms of "art" than science and engineering.

Because granular NPKs continue to play such an important role in many fertilizer supply strategies worldwide, this workshop was organized to facilitate a better understanding of the technology and methods used for their production.

Also, since urea is the most available and usually most cost-effective source of nitrogen worldwide, this workshop closely examined the specialized plant engineering and manufacturing criteria required for the production of high-quality NPKs using urea as the primary source of nitrogen. Urea-based NPKs, because of their unique properties, require special care in processing and storage, especially with regard to certain critical chemical, temperature, and humidity parameters. For these reasons, the use of urea in the production of granular NPKs is often avoided.

To help guide the workshop deliberations, a technical bulletin was prepared describing many of the salient features that should be considered when designing and operating urea-based NPK plants (refer to Appendix). The data contained in the technical bulletin are reinforced and complemented by a number of invited papers describing actual commercial experience with the design and operation of urea-based NPK plants. The technical papers and discussions are further supplemented by pilot plant-scale demonstrations of urea-based NPK plant design and operating criteria.

Workshop
Urea-Based NPK Plant Design and Operating Alternatives
Muscle Shoals, Alabama, U.S.A.
September 17-28, 1990

International Fertilizer Development Center Workshop Staff
James J. Schultz, Manager
Ram S. Giroti, Administrator
Jorge R. Polo, Technical Coordinator
George W. Bolds III, Pilot-Plant Operations Coordinator
J. Ramon Lazo de la Vega, Pilot-Plant Engineer
T. Alan Nix, Administrative Assistant

Table of Contents

Selection of Fertilizers – Agronomic and Economic Factors
Dennis H. Parish 1
Modified Urea Fertilizers Used in Specialty Markets and Their Potential for Agricultural Crops
John H. Detrick 9
Nitrogen Sources for Granular NPKs – Why Use Urea?
James J. Schultz 12
Experience With Production of Urea-Based High-Grade NPK Fertilizers
S. K. Chatterjee 14
Operational Experiences With NP-NPK Granulation at Coromandel Fertilisers Limited – India
S. Ramadurai 21
Production of Complex Fertilizers – An Operating Experience in India
T. J. Joseph and T. A. Sankaran 27
Improving Productivity in NPK Granulation Plants – NAFCON (Nigeria) Experience
T. R. Ramaswami 33
Experience With Urea-Based NPK + MgO Compound Fertilizer Production and Marketing in Malaysia
Mohd. Salleh Bin Darus 39
Role of the Engineering Company in the Implementation of a Urea-Based NPK Granulation Project in Malaysia
Lee D. Hoffman and Glen H. Wesenberg 47
Production of Urea-Based Fertilizers With Pipe-Cross Reactor Technology – TVA Experience
B. R. Parker, M. M. Norton, and B. W. Curtis 50
Temperature Control During Agglomeration-Type Granulation
Jorge R. Polo 61
Dehumidification of Production Units and Warehouses
J. R. Polo 68
Fertilizer Product Conditioning Agents – Emphasis on NPKs
David W. Rutland 76
Storage and Handling Characteristics of Urea-Based NPK Fertilizers
David W. Rutland 82
Granulation of Fertilizers by Compaction
Wolfgang Pietsch 89
Compaction/Granulation of Fertilizers
Christian Fayard and Pascal Hervieu 99
Compaction/Granulation of Fertilizers – A Practical, Economical, and Agronomically Favorable Technology in Guatemala
Frank A. Dalton 109
Design Parameters for Bulk-Blending and Compaction/Granulation Plants
Daniel M. Alt 114
The Manufacture of Fertilizers by Compaction/Granulation
Maurice O. Klein 119
Pilot-Plant Demonstration of Selected Operating Parameters for the Production of Granular Urea-Based NPKs
George W. Bolds III 133
Pilot-Plant Demonstration of TVA Pipe-Cross Reactor Technology for the Production of Urea-Based 17-17-17
B. W. Curtis 139
Pilot-Plant Demonstration of Urea-Based NPK Granular Fertilizers Produced by the Compaction Process
J. Ramon Lazo de la Vega 141
Questions and Answers – Agronomic Session 145
Questions and Answers – NPK Plant Design and Operation 148
Questions and Answers – Pipe-Cross Reactor Session 156
Questions and Answers – Panel Discussion on Plant Operating Experience 161
Questions and Answers – Compaction/Granulation Technology 166
List of Delegates and Invited Speakers 176
Appendix Production of Granular NPKs in Ammonium Phosphate Plants – Some Important Differences (IFDC Technical Bulletin T-36)

Selection of Fertilizers – Agronomic and Economic Factors

Dennis H. Parish[1]

Abstract

Use of a net return curve is discussed as a method for choosing the correct fertilizer application rate to give the greatest crop cash return per unit of fertilizer cost. Major internationally traded fertilizer materials are listed and the advantages and disadvantages of these materials as nutrient sources under a variety of conditions are summarized. Bulk blending and cogranulation are addressed as methods for furnishing nutrients to crops.

Amount of Fertilizer to Apply

The efficiency of fertilizer use is measured in several ways by scientists.

For most agricultural situations, the agronomic efficiency is adequate as a measure of crop response to applied fertilizer and the effectiveness of its use:

Agronomic Efficiency (kg/kg) = (Yield of salable $crop_F$ – Yield of salable $crop_C$) divided by weight of fertilizer nutrients (FN) applied

where F = fertilized crop, C = unfertilized check, and FN is plant nutrient studied.

Crop response to increasing rates of available fertilizer nutrient is curvilinear with the initial part of the curve becoming steeper and straighter as the benefit to be obtained from fertilizer use increases. A typical response curve for maize is given in Figure 1.

The farmer applies fertilizer to convert a cash expenditure into an increased income. In other words, maximum net return per unit area is the farmer's goal; the efficiency of fertilizer use is only one aspect of this. A net-return curve also is shown in Figure 1. Use of a typical net return curve implies that the farmer should apply that rate of fertilizer at which the cost of the last kilogram of fertilizer applied produces an exactly equal value of crop. At this point, fertilizer use efficiency is low; beyond this point, the farmer begins theoretically to lose money and wastes fertilizer.

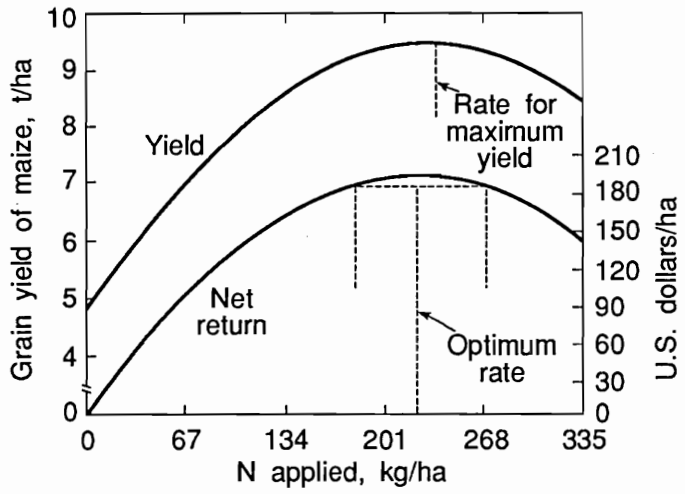

Source: Engelstad, O. P., and W. L. Parks. 1971.

Figure 1. Average Yield Response to Rates of Applied N With Calculated Net Returns.

Developed country farmers have, however, tended to use higher levels of fertilizer than is necessary for maximum profit for two principal reasons.

1. The nature of the response curve is such that in practice the net return curve is quite flat at the maximum. Recommended fertilizer application rates for maximum economic yield (MEY), moreover, do not change greatly with changes in fertilizer and crop prices; fertilizer costs are only a small proportion of total crop production costs, and even indeed of actual cash costs. Most farmers therefore use that extra bag of fertilizer for insurance against possible yield loss.
2. The intense marketing activities of the commercial sector encourage farmers to use "that extra bag," and although fertilizer recommendations are based on good-quality soil analysis, sample results show that private-sector laboratories often recommend higher levels of fertilizer use than do the state laboratories.

1. Director, Agro-Economic Division, International Fertilizer Development Center (IFDC) – United States.

Unless noted otherwise; metric units of measure are used throughout these proceedings.

Fertilizer Products

Fertilizer should be purchased only on the basis of cost effectiveness. However, product quality, i.e., granules instead of powder, and convenience (multinutrient versus straight fertilizers) play a role in the choice. Of course, convenience carries with it a price premium which may or may not be compensated for in terms of crop production economics.

Low-analysis fertilizers are more expensive per unit of nutrient to bag, distribute, and store than are the equivalent nutrients in concentrated fertilizers and, therefore, the international trend has been toward the use of high-analysis fertilizers.

Three factors which affect the final cost of fertilizer applied in the field must be examined:

1. The technology of production.
2. Handling, distribution, and storage.
3. Choice of nutrient carrier (source).

Technology of Production

Modern fertilizer technologies are very cost effective and their products are cheap and readily available to the international trade. Importation of fertilizers is therefore often the most efficient route. Local production of fertilizers should only be encouraged where it will be competitive with imported fertilizers. Furthermore, until large fertilizer markets have been built up, production units with a low level of capital investment and a flexible operation should be the prime objective.

Handling, Distribution, and Storage

Efficient handling, distribution, and storage of fertilizers are essential if costs are to be kept as low as possible. With the tremendous distances and generally poor hinterland infrastructure, many developing countries face enormous problems. Inefficient logistics not only increase fertilizer costs but can also reduce the efficiency of its use; fertilizer which arrives late or not at all, or is of the wrong kind, can reduce anticipated crop yields and destroy the carefully nurtured confidence of the farmer in relying on input supplies.

Costs associated with fertilizer handling, distribution, and storage are very high. For example, the f.o.b. cost of ammonium sulfate (AS) may be doubled by the time the fertilizer reaches the farmer. Such doubling of the f.o.b. cost per bag of fertilizer delivered to the farmer means that only products with a high nutrient content can be considered where transport distances are long.

Choice of Nutrient Carrier

The following major plant nutrients are needed:

1. Nitrogen.
2. Phosphate.
3. Potash.
4. Sulfur.
5. Magnesium and calcium.
6. The trace elements – boron, zinc, and others.

Table 1 gives the composition of the major internationally traded fertilizers. The first point to be made from Table 1 is that, if sulfur is a required nutrient, AS can be considered as a high-analysis fertilizer. If, however, sulfur is not needed, AS is a low-analysis fertilizer that cannot compete with urea in terms of delivered cost of nitrogen. Phosphate rock (PR), single superphosphate (SSP), and triple superphosphate (TSP) also contain calcium, which may be needed as a plant nutrient; however, where soil calcium is low, the use of small dressings of local limestone would appear to be the most logical way to correct this problem.

Table 1. Major Internationally Traded Fertilizers

Product	% by Weight N	% by Weight P_2O_5	% by Weight K_2O	Total Nutrient Content, % N + P_2O_5 + K_2O	Total Nutrient Content, % S
Ammonium chloride	26	-	-	26	-
Ammonium nitrate	34	-	-	34	-
Ammonium sulfate	21	-	-	21	24
Urea	46	-	-	46	-
Monoammonium phosphate	11	52	-	63	-
Diammonium phosphate	18	46	-	64	-
Phosphate rock	-	30-34	-	30-34	-
Potassium chloride	-	-	60	60	-
Potassium sulfate	-	-	50	50	18
20-10-10	20	10	10	40	-
15-15-15	15	15	15	45	-
20-20-0	20	20	-	40	-
SSP	-	20	-	20	12[a]
TSP	-	46	-	46	-
16-20-0	16	20	-	36	9-13 Depending upon process

a. Sulfur content may vary depending upon acid-to-rock ratio.

Source: IFDC, 1985.

Nitrogen (N)

The major sources of nitrogen are anhydrous ammonia, ammonium nitrate, ammonium sulfate, ammonium chloride, urea, and various nitrogen-containing

compound products. Although all straight nitrogen fertilizers are effective fertilizers if correctly used, they are being replaced in world trade by urea because of its delivered cost advantage.

The agronomic appropriateness of urea as a fertilizer is discussed under the following headings.

Toxicity–The toxicity of free ammonia, formed by the hydrolysis of urea in soil, is a potential crop hazard following improper use of urea. In most warm, moist soils, urea hydrolysis is rapid, often within 1 week. This rapid hydrolysis can give rise to high concentrations of free ammonia near the urea placement sites. Because of the toxicity of free ammonia to plants, it is recommended that urea never be placed in close contact with seeds or in contact with the base of young plants.

N Loss–Ammonia volatilization loss is another potential limitation on the use of urea. When urea is incorporated into soil, the free ammonia formed upon hydrolysis ionizes with water and the ammonium ion is held by the cation exchange complex of soil. However, when urea is left on a moist soil surface, especially with an upward flow of water, hydrolysis to ammonia is rapid, and a portion of the free ammonia escapes to the atmosphere. Rainfall in sufficient quantity to move the urea into the soil would minimize this ammonia volatilization loss, whereas very light rainfall, just sufficient to lead to hydrolysis of urea, followed by drying conditions would cause large ammonia volatilization losses. Reported data indicate that up to 80% of urea applied on a dry soil surface remained as urea for 14 days even under high humidity and nightly dews. The varying rainfall patterns following urea application are partly responsible for the erratic results reported for the relative efficiency of urea when surface applications have been used.

A brief summary of findings of many trials indicated that when urea was incorporated into the soil within 1 day following application, either through water additions or tillage, it was as effective a source of N as AS or ammonium nitrate (AN). When urea was broadcast and left on the soil surface, the average of many trials for upland crops and paddy rice showed that it was slightly inferior to AS or AN; however, it was significantly inferior in some trials. In the latter cases the poor performance was generally attributed to ammonia losses. Empirical research data confirm the high potential losses of ammonia from surface applications of urea from both upland soils and water surfaces of paddies. Where the pH is greater than 7.5, ammonia losses may also occur from surface-applied ammonium sulfate.

Effects of N Fertilization on Soil Properties–A major concern of many agriculturists is the acidification of tropical soils where crop intensification and increased use of N fertilizers are occurring. The acidifying effect of N fertilizers is of greater consequence in sandy soils of low buffering cation exchange capacity (CEC) than in soils of higher CEC and, therefore, soil acidification is potentially a serious problem in many areas.

Nitrification of ammonium forms of fertilizer (change from ammonium to nitrate) produces hydrogen ions which can contribute to soil acidity. Each kilogram of N potentially requires 1.8 kg of calcium carbonate to neutralize the acidity. Furthermore, the associated anions of ammonium fertilizers give rise to additional acidity due to residual anions. Potential acidity from several nitrogen fertilizers is shown in Table 2. Ammonium chloride and AS are the most acidifying because of the contribution of sulfate and chloride to potential acidity. Products, such as calcium, potassium, and sodium nitrate, have positive liming values because of their basic cations.

Table 2. Potential Acidity of Nitrogen Fertilizers

Fertilizer	N	Potential Acidity[a] kg $CaCO_3$/ kg Fertilizer	Potential Acidity[a] kg $CaCO_3$/ kg N
	(%)		
Anhydrous ammonia	82	1.48	1.8
Urea	46	0.84	1.8
Ammonium nitrate	33.5	0.59	1.8
Ammonium sulfate	21	1.10	5.2
Ammonium chloride	25	1.28	5.1
Ammonium nitrate limestone[b]	20.5	0	0
Calcium nitrate	15	-0.20	-1.3
Sodium nitrate	16	-0.29	-1.8

a. Amount of pure calcium carbonate ($CaCO_3$) required to neutralize acidity produced by fertilizer in soil.
b. Other similar products are calcium ammonium nitrate, nitro-lime, and nitro-chalk. Various means of production result in variations in grade and potential acidity.

Source: IFDC, 1986.

In actual practice, these potential values are not observed in soils. Adsorption by plants modifies acidity to the extent that cations or anions are preferentially taken up by plants. The final acidity from a fertilizer in a particular zone of soil develops only after residual salts are removed from that zone by leaching. Research has confirmed the following effects:

1. Continuous use of N fertilizers (particularly at high rates) decreases soil pH.
2. The lower pH is caused by lowering of the calcium and magnesium status of soils and is accompanied by an increase in extractable aluminum and sometimes manganese.

3. AS has a greater depressant effect upon soil pH than does urea or calcium ammonium nitrate (CAN). The latter two sources of N result in similar effects on soil pH, even though theoretically urea has the greater potential acidity.

With the ever-increasing soil acidity problem, some means of applying calcium carbonate to soils should be developed. Ground limestone possibly could be cogranulated with urea, but it would likely be less expensive to develop an agricultural limestone industry to supply liming materials. The widespread use of liming materials has often been achieved only through the use of subsidies and intensive extension activities.

Phosphate (P)

Internationally traded P fertilizers are ground PR, MAP, DAP, the whole range of NPK materials, TSP, SSP, and ammonium phosphate/sulfate. These materials are described in Table 1. Many countries must import all of their P needs; under these conditions the economic argument for high-analysis material, as with N fertilizers, outweighs the opportunity for some flexibility in the selection of imported P products.

SSP–SSP was, by far, the most important P fertilizer for over 100 years and is still an important fertilizer. It can be produced by uncomplicated processes and equipment, and its effectiveness as a source of P is unquestioned. Also, it contains calcium and sulfur, which may contribute to soil fertility, and sometimes trace elements originating from the PR. Its main disadvantage is its low analysis, about 16%-22% P_2O_5. Because of its low analysis, it is usually made in small plants located in the market area. SSP may be a good choice for developing countries (and for some developed countries) that have either sulfuric acid or PR or both. This is especially true when both P and sulfur are needed for good crop growth, which is the case in many parts of the world.

TSP, MAP, and DAP–Based on phosphoric acid, these products are essentially sources of water-soluble phosphate and are therefore agronomically equivalent; their popularity over SSP is due to their lower costs per unit of P delivered at the farm.

Nitrophosphates–These products are based on nitric acid. They vary in composition and in the water solubility of the P they contain. Again cost per unit of agronomically effective P delivered at the farm should be the basis for selection.

Phosphate Rock–Direct application of finely ground PR may be the least expensive way to supply P to crops in large areas of the world. The practice is well established in several developed and developing countries; it is estimated that about 5% of the world's P fertilizer use is supplied by direct application of PR. Its use is especially attractive when indigenous PR is available; however, use of imported rock may be economical in some cases. The best results are obtained on well-watered acidic soils and with relatively reactive phosphate rocks.

The advantages of using ground PR for direct application are as follows:

1. Low cost, especially if indigenous rocks are used.
2. Low capital investment.
3. Low requirement for technical skill.
4. Small energy requirement.
5. Suitability of rocks unsuitable for chemical processing (high-carbonate or high-chloride rocks, for example).
6. Avoidance of long delays for constructing processing equipment.
7. Low importance of economy of scale and capacity utilization.
8. Supply of calcium and sometimes other nutrients in addition to P.

The practice has certain distinct disadvantages that cannot be ignored. The most notable of these are the following:

1. The P content in PR often is considerably less than that found in high-analysis conventional phosphates; thus, its competitiveness for markets at increased distances from the mine site is limited.
2. Different PRs vary considerably in chemical reactivity, and their agronomic effectiveness is strongly influenced by soil, crop, and climatic conditions.
3. The problem of the dustiness of powdered phosphate rock has generally been overstated. It should be noted that in Malaysia, where agricultural workers are relatively well paid, powdered PR spread by hand is a major fertilizer.

Many farmers in the United States started P fertilization first by using ground rock, and the annual U.S. consumption rose to more than 1 million tonnes in the 1950s. Later, the consumption declined when high-analysis, granular, soluble phosphates, such as DAP, became available from Florida and freight cost increases made the products competitive with ground rock.

Partially Acidulated Phosphate Rock (PAPR)–PAPR has been produced in several European countries and in Brazil and is still being produced in sizable quantities in a few countries. Acidulation of ground PR with about 50% of the sulfuric acid that is required for SSP gives a product that can contain about 23% total P_2O_5, of which about one-half is water soluble and hence readily available; the remainder will behave like the rock from which it is made.

Under proper conditions, the reaction is rapid and complete, and the product does not require curing. The product has the obvious advantages of lower cost due to saving of sulfuric acid and higher analysis than SSP. Also, it is a good source of sulfur where that element is deficient, and the $S:P_2O_5$ ratio is close to that required for most crops.

Summary of P Research Results–The following generalizations on P selection illustrate the results of recent research.

1. Both water-soluble fertilizers and citrate-soluble P fertilizers may be said to be available to plants, but there can be considerable differences in crop response under different circumstances.
2. For absolute maximum yields, regardless of soil or annual food crop to be grown, highly soluble P sources are the fertilizers of first choice. For crops grown on acid soils under the typical constraints of developing countries, water solubility is less important.
3. Citrate-soluble phosphates low in water-soluble P and unacidulated PR with a high chemical reactivity may be as effective as water-soluble sources on long-season crops.
4. PR is generally most effective on acid soils with low P-retention capacity.
5. In cases where P demand of the crop exceeds the capability of an unacidulated source to supply P or where the P-retention (fixation) capacity is so great that the rock is incapable of raising the concentration of P in soil solution to an adequate level, sources with 50% of the total P in water-soluble form have generally been found to be essentially equal in effectiveness to the completely soluble forms.
6. Short-season, fast-growing crops and those with restricted root systems generally require a fertilizer containing a high proportion (50%+) of water-soluble P for maximum yields. Such crops frequently give only limited response to applications of slightly citrate-soluble materials such as PR. This is primarily true for soils that are low to medium in available P.
7. When low rates of P are to be applied, the greatest crop response and most efficient use of P will be achieved by band application adjacent to the seed or transplant. In such cases 50%-60% of the P should be in the water-soluble form.
8. Water solubility increases in importance where soil moisture is limiting.
9. With phosphates of high water solubility, effectiveness increases with an increase in particle size.
10. For row or band application, highly water-soluble sources of P combined with ammonium-N are most useful.
11. In general, when the degree of water solubility of the P and the granule size of fertilizers are comparable, there will be little difference in the availability of the fertilizers, regardless of the method of manufacture.
12. One of the economic factors influencing P use deals with residual P. Most economic analyses as well as government policies fail to put a value on residual P. As a result, much confusion prevails on this subject which, in turn, affects P use. Farmers treat P as an annual cost and apply it accordingly. However, only 5%-15% of the fertilizer P applied to the soil is recovered by the first crop. The remaining P is held in the soil and added to a P pool, which is gradually available to subsequent crops. As a result, annual additions in excess of crop removal will gradually build P fertility in the soil. The speed with which this fertility is built will depend on a host of factors, including the rate of P_2O_5 application in relation to removal and the P-retention characteristics of the soil.

Potash (K)

Potassium chloride is the standard potash fertilizer. It contains the equivalent of 60% K_2O and thus is considered a concentrated source of potash. Because of the low cost of production, potassium is the cheapest commercially available nutrient and is simple to use.

Sulfur (S)

Recent experience has shown sulfur deficiency to be more widespread than was thought. Poor crop residue management and the use of sulfur-free fertilizers aggravate the situation. Accurate diagnosis is the key to the removal of yield limitations due to sulfur deficiency. For many of the crops of importance, diagnostic criteria are nonexistent or lacking in precision. The change to more concentrated fertilizer, and particularly from AS to urea, is a cause for concern. Researchers should carefully examine the possibility that at least a modicum of sulfur is needed in all compound fertilizer formulations in order to prevent loss of yield should sulfur, in fact, be limiting. AS and 16-20-0 are good sources of sulfur, as are SSP and PAPR. Elemental S can also be used directly or incorporated into fertilizers. Sulfur added to urea is a new product.

Magnesium (Mg)

This element is not usually a cause for concern unless high levels of potash are used, which can induce a

deficiency of magnesium. The ideal source of magnesium for acid tropical soils is dolomite. Kieserite is a more expensive source of magnesium.

Calcium (Ca)

Deficiencies of calcium, e.g., on groundnuts in Nigeria, cause yield loss. Calcium-containing fertilizers or ground limestone cure the problem.

Trace Elements (B, Cu, Fe, Mo, Mn, Zn)

There is a wide range of products available as salts, oxides, or chelates. These can be applied to the soil, mixed with fertilizers, and dusted or sprayed onto plants. Trace elements are required in such small quantities that they may present a problem to the fertilizer formulator. The major word of caution is that at high levels some can be toxic to plants; boron, particularly, can accumulate quite quickly to toxic levels.

Mixed Fertilizers (NPs and NPKs)

Crops need many nutrient elements for optimum growth, but fertilizers containing N, P, and K account for almost all the world's supply. However, with the use of high-analysis, low-sulfur fertilizer, sulfur is becoming increasingly important and supplementary magnesium is used on many plantation crops so that significant tonnage of fertilizers containing these two nutrients is used. Although local deficiencies of trace elements also occur, total tonnages of trace elements used are relatively small.

Choosing the Most Appropriate Fertilizer

Persuading the farmer to use the correct rate and type of fertilizer nutrients on his crops is a problem that exercises the minds and resources of the governments of many developing countries. The problem of balanced fertilization is two-sided – many fertilizer recommendations made in developing countries are not site specific and are based on experiment station trials, which often give much higher yields than the average farmer can achieve; conversely, many farmers do not fertilize in an optimum way even for their lower yields. When fertilizer recommendations and actual farmer use practices do not match, it is essential that the research agronomists, the fertilizer marketer, the extension staff, and the farmers be involved in identifying the reasons for the disparity and in developing corrective measures. Cash crop production input credit programs that give the farmer a package of desirable practices, including specified quantities and types of fertilizer, ensure that the farmer at least acquires the officially recommended fertilizer. Such package credit programs have been widely used with success by the crop monopoly organizations. In India, government control orders require fertilizer retailers to stock both P and potash (KCl) at a specified level in relation to their sales of N. With a free market situation, it is necessary to educate the farmer to maximize his returns by using the correct rates and ratios of fertilizer nutrient.

When all the nutrients to be used in an agricultural area come together at one point, whether by port, railhead, or road, then the need for and desirability of producing complex (NPK) fertilizers at that point should be examined. A case can be made for any one of the following three alternatives:

1. Continuing to move products as separate and distinct materials.
2. Processing the incoming nutrients to make homogeneous granular complex fertilizers.
3. Mixing the incoming nutrients using current bulk-blending technology.

The final choice of technology will depend on the local situation. Some countries, Cameroon for example, have had the misfortune to have invested in a granulation plant at the wrong time in the development of fertilizer use. Low sales and high production costs led to early closing of this plant.

Granular complex fertilizers have achieved great popularity among the small farmers because of the reliability of the products. Blue, green, or red high-quality fertilizer granules cannot be counterfeited by backyard operators; this fact, together with the strong sales pitch that "every granule contains the same nutrients as every other granule," has certainly attracted a loyal clientele for the producers of granular fertilizers. Complex fertilizers continue to be of great interest for upland crop production to the high-value cash crop grower, but they have continued to lose the market share to the bulk-blended fertilizers.

There is a general trend toward manufacturing concentrated fertilizers in large plants at or near the source of the raw materials and shipping the products in bulk to consuming areas. This trend is likely to continue. Bulk shipment of finished products requires reasonably free-flowing materials so that products, such as urea, DAP, and KCl can be rapidly loaded and unloaded from ships, barges, and railcars. Therefore, these materials are increasingly produced in granular form to avoid serious caking. The availability on the world market of an abundance of these high-analysis, reasonably priced materials will encourage bulk blending because blending adds very little to the cost of bulk shipment, storage, handling, bagging, and distribution. Although blending has long been popular in the United States and Canada, there is a growing trend for the practice to spread to other countries.

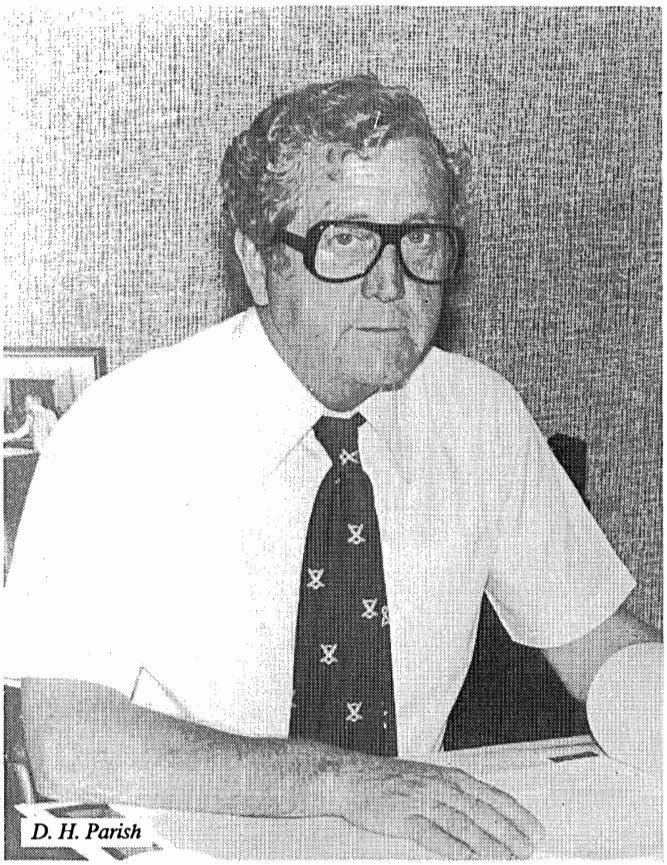

D. H. Parish

On the typical developing country farm of 1-2 ha and individual plots of about ¼ ha, the farmer will use hand spreading. In this situation, use of the cheapest solid materials, such as urea, DAP, and KCl, is probably the most economic route; however, because it is also the one that relies most heavily on the farmer's knowledge of the nutrients needed, the relevance of the next lowest cost solution, that of bulk blending, should be evaluated.

Bulk blending is attractive as an alternative to handling straight N, P_2O_5, and K_2O through the distribution system, but the risk exists that the nutrient ratios delivered to the system will be excessively tailored. Only a few major grades should be made and, even then, in practice farmers will probably find themselves being forced to take grades not totally adequate for their need because of deficiencies in the marketing system.

Although bulk blending is a simple process, there are elements of technology that should not be ignored. Production of satisfactory blends in developing countries requires more care than in cooler, less humid climates. Unlike the common practice in the United States of mixing and applying blends on the same day, in most countries the blends must be bagged, stored, and transported through the distribution system to the farmer. Thus, the blends must have good physical properties, and the bags must have adequate strength and resistance to moisture penetration if the products are to reach the farmer in usable condition.

The addition of trace elements to bulk blends is difficult and in areas where a complex mix of plant nutrients is required, the use of complex fertilizers as ingredients of the bulk blend should be considered.

Conclusions

Although inadequate or badly distributed rainfall reduces crop yields, low soil fertility is the major controllable constraint to crop production. The recycling of organic matter and the use of leguminous crops can help, but fertilizers are essential over large areas. Fertilizers are expensive, and the form, rate, and time of application and placement must be optimized if their use is to be profitable. Plantation-type crops and small farmer cash crops, such as high-yielding varieties of rice, wheat, maize, and cotton, bring economic benefits when correctly fertilized. With the traditional cereals and root crops, factors other than the low soil fertility often reduce the farmer's interest in fertilizer; the inability to turn a sure profit from fertilizer use is the principal factor.

The choice of fertilizer for sale to farmers should be made on the basis of cost per unit of agronomically effective nutrient applied in the field. As a nitrogen source, urea is extremely competitive with other forms, and in Africa, where transport and distribution costs are high, the high analysis of urea (46% N) makes it the rational choice. For phosphates, the materials DAP and MAP are currently extremely competitive, again particularly because their high analysis reduces transport and distribution cost. PR, which is the cheapest P source f.o.b., is often not competitive with DAP when evaluated on a delivered cost to the farm. Large-scale soil rehabilitation projects should consider bulk PR as a P source; under these conditions it would then be competitive because it would be much cheaper delivered in the field than would bagged PR. For potash, the situation is quite simple. Potassium chloride is used where chloride is not harmful to crop growth or quality; otherwise, potassium sulfate is used. Sulfur is widely deficient and can be supplied easily as AS or as SSP and, of course, as elemental S. Trace elements are usually applied as salts, but organic compounds, i.e., "chelates" are available for special use. Boron is widely used in Africa in the form of sodium borate.

Multinutrient fertilizers, either as homogeneous granules or as bulk blends, have a role to play, but the multinutrient ratios produced must be restricted in number and selected to match the needs of significant numbers of farmers.

Fertilizer costs could be reduced by improved products, production techniques, handling, and use. Only a carefully integrated fertilizer sector can help nations stimulate farmer use of fertilizers and increase national benefits from their use.

Some developing countries have a tendency to neglect the quality of both straight and mixed fertilizers and their packaging. It is unfortunate that many countries appear willing to spend huge sums of money on manufacturing facilities but fail to provide adequate facilities to ensure that products are of good quality and can be delivered to farmers in usable condition.

Strong and enforceable fertilizer legislation to ensure that farmers receive what they are paying for is an absolutely essential component of all sound fertilizer marketing systems.

Bibliography

Diamond, R. B. 1983. "Agronomics of Urea Usage," IN *Nigeria Fertilizer Marketing Study*, IFDC, Muscle Shoals, Alabama, U.S.A.

Engelstad, O.P., and W. L. Parks. 1971. "Variability and Optimum N Rates for Corn," *Agron. Journal*, 63:21-23.

Engelstad, O.P., and G. L. Terman. 1980. "Agronomic Effectiveness of Phosphate Fertilizers," IN *The Role of Phosphorus in Agriculture*, F. E. Khasawneh et al. (eds.), American Society of Agronomy, Madison, Wisconsin, U.S.A.

Modified Urea Fertilizers Used in Specialty Markets and Their Potential for Agricultural Crops

John H. Detrick[1]

Abstract

Methods of modifying urea to control the rate of nitrogen release in the soil are reviewed. Currently used methods include (1) reaction to form slowly soluble compounds such as urea-formaldehydes, (2) coating urea with sulfur, and (3) coating urea with organic polymers. Because of high costs and less than optimum time/release characteristics, none of these products have found acceptance for large-volume agricultural crops. However, a new coating process, now under development, results in the in situ formation of an ultrathin organic polymer coating, with resultant lower coating costs and more favorable release characteristics. It is expected that urea coated in this manner may be economical for application to some agricultural crops.

Introduction

Modified solid urea particles used as controlled-release nitrogen are divided into two categories: (1) chemically reacted urea products such as solid urea-formaldehyde and (2) physically coated urea particles such as sulfur-coated urea (SCU) and polymer-coated urea (PCU). The principal market application for these controlled-release urea nitrogen (CRUN) formulations is for noncrops, such as golf course turfgrass, where turfgrass quality considerations are paramount. A smaller market for CRUN products exists in high-value crops, such as nursery ornamentals and fruit/vegetable crops, such as strawberries/peppers, where the high value of the incremental yield increase offsets more than threefold the incremental cost of the controlled-release fertilizer which caused the yield gain. Typical nitrogen-release rates for a number of CRUN products are shown in Figure 1.

Potential for Modified Urea Products

The potential for using CRUN products in agricultural crops of relatively low value per hectare will be greatest when (1) the nitrogen demand by the plant during its life cycle can be met by the nitrogen released from a blend of uncoated soluble urea and a controlled-release urea nitrogen product and (2) the CRUN product is produced relatively close to the site of its use by a production process that is relatively simple, safe, and low cost. The incremental cost per hectare of the CRUN application must be offset by the value of the incremental yield gain above normal yields expected through standard fertilizer practice. Usually, the minimum acceptable incremental value to incremental cost ratio is 3 to 1.

The two most commonly used modified urea products, sulfur-coated urea and urea-formaldehyde, generally are deficient for use in agricultural crop applications because (1) the processing is not simple and has a high capital cost for production and (2) the nutrient-release profile is curvilinear as a consequence of too much early release (which only needs to be supplied by the soluble portion of the blend) and incomplete release during the plant's life cycle demand for nitrogen. Since, on a contained nitrogen basis, the cost of sulfur-coated urea is two to three times that of uncoated urea, and urea-formaldehyde nitrogen costs are greater still, the economical use of these products in agricultural crops is unlikely. The wide use of polymer-coated urea for agricultural crops is even more unlikely, since the use of polymers as coatings can be as much as 20 to 30 times more costly than the use of sulfur as a coating material. Also, current polymer-coating technologies do not provide the required degree of release control when applied onto the urea at the ultra-thin coating level that is necessary to achieve a low percentage of applied coating that would compensate for the higher polymer material cost.

Recently, a new process has been developed where copolymerization of applied liquid monomers occurs directly on the granule surface during the coating process. A series of sequentially applied liquid monomer layers react, polymerizing in place on the granule, to form a tough, durable, ultrathin polymer membrane coating. Urea coated by this reactive layers coating (RLC) process has minimal initial release following application, thereby permitting increased use of low-cost uncoated urea in a granular blend with PCU. The ultrathin coating achieved

1. Manager, Technology and Market Development, Pursell Industries Division, Parker Fertilizer Company, Inc. – United States.

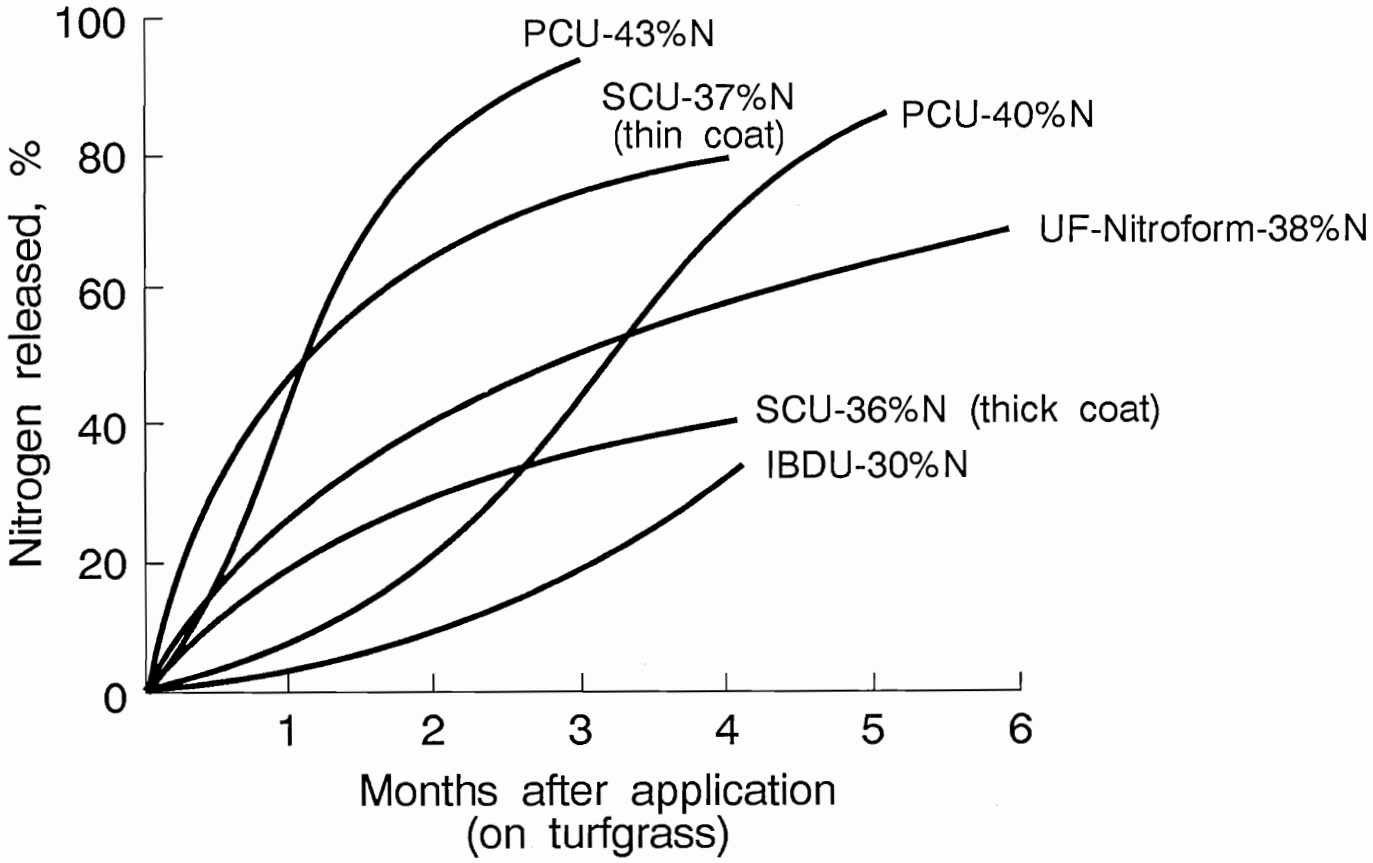

Figure 1. Approximate Nitrogen-Release Rates for Selected Controlled-Release Urea Nitrogen Products.

using the RLC process is compared with the traditional thick sulfur coat in Figure 2. The early release of the uncoated urea and the later release of PCU (for example, RLCU) from a single application of a blend of these two materials resemble that of a split application of urea. Also, the PCU (RLCU type) plus urea blend may reduce further nitrogen losses due to ammonia volatilization, a common problem with uncoated urea when applied under the hot and humid conditions that frequently are encountered at the time of the second split application.

Conclusion

In summary, urea which has been either chemically modified or physically modified by coating with sulfur or a polymer to provide slow-release performance has been relegated to nonagricultural applications, such as turfgrass, or for very high value crop applications, where the incremental yield value gain is sufficient to offset the higher incremental cost of the controlled-release application. The higher nitrogen cost of these controlled-release products/formulations and their general inability to meet the plant's nitrogen demand during its life cycle have precluded their widespread use in agricultural crops. A new polymer-coated urea process technology, designated RLC for the reactive layers coating process used, effects a polymerization reaction on the surface of the urea. The RLC process results in an ultrathin polymer coating on urea that mitigates the effect of the high cost of polymer coating materials. This ultrathin polymer coating technology, therefore, increases both the agronomic and economic potential for the RLC type of polymer-coated urea to be used worldwide in the fertilization of agricultural crops.

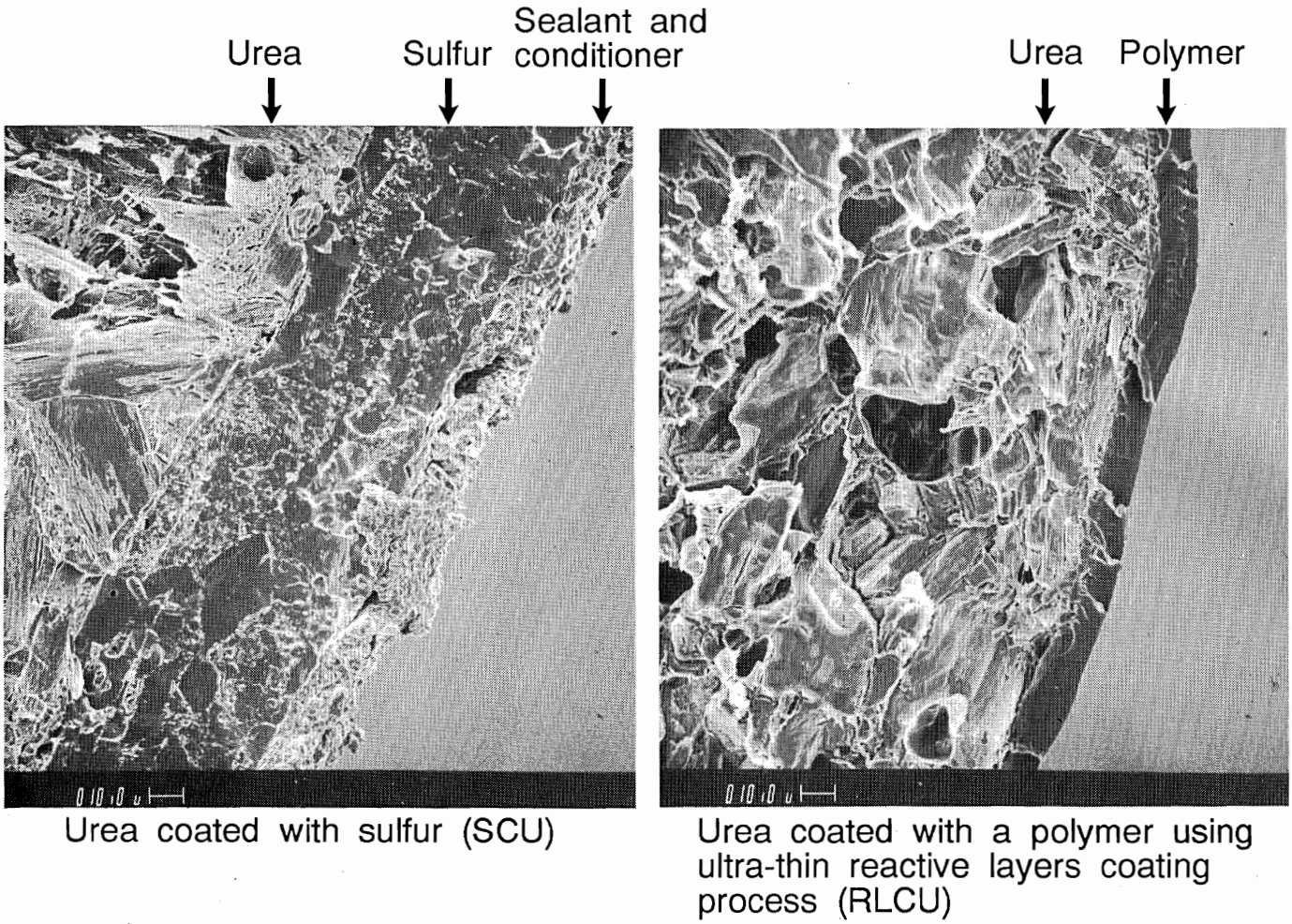

Figure 2. Comparison of Typical Coating Thickness Required to Achieve Equivalent Nitrogen-Release Rate (SCU and RLCU).

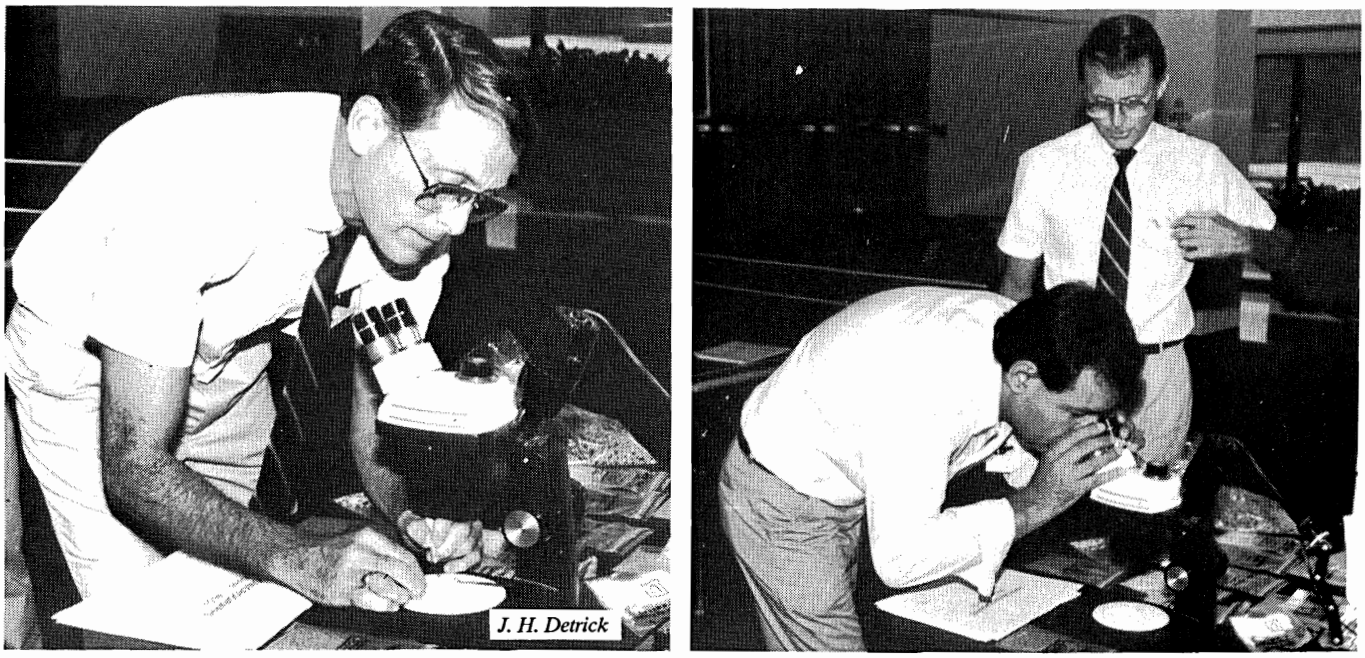

Nitrogen Sources for Granular NPKs – Why Use Urea?

James J. Schultz[1]

Introduction

Urea, containing 46% nitrogen, is the most abundant source of solid nitrogen fertilizer in the world marketplace. Current world production amounts to about 70 million tonnes of product. The great majority of this product (about 85%) is produced and marketed in the form of prills having a typical particle-size distribution between 1 mm and 3 mm. A relatively small quantity (about 10% of total world production) is produced in granular form usually having a particle-size distribution between 1.5 mm up to 5.0 mm. An even smaller amount (about 5% of the total) is sold in the form of urea and urea/ammonium nitrate solutions containing about 28% to 32% nitrogen.

Because of its worldwide abundance and relatively low delivered cost, urea continues to attract interest among those either producing or planning to produce granular NPKs.

Common Sources of Nitrogen Used in the Production of Granular NPKs

The sources of nitrogen that are commonly used to produce granular NPKs are shown in Table 1. It is important to note, however, that of the approximately 60 million tonnes of granular NPK products produced annually worldwide (excluding binary products such as DAP:18-46-0, and NP:20-20-0 or 16-20-0), less than 2 million tonnes is based on the use of urea as the primary source of nitrogen. A summary of the advantages and disadvantages of the most common sources of nitrogen used to produce granular NPKs follows.

Table 1. Common Sources and Estimated Cost of Nitrogen

Source	Approximate Cost (Bulk Material) f.o.b.	Delivered[a]
	- (US $/t nitrogen) -	
Anhydrous ammonia, 82% N	120	170
Ammonium nitrate, 33%-35% N	400	485
Ammonium sulfate, 21% N and 24% S	190	330
Urea, 46% N	260	325
Sodium nitrate, 16% N	1,030	1,220
Potassium nitrate, 13% N and 44% K_2O	540[b]	590[b]

a. Delivered cost based on average 1990 f.o.b. cost plus US $30/tonne transport and handling for solid materials and US $40/tonne for anhydrous ammonia. Costs may vary widely due to market conditions, tonnage, and site-specific factors.
b. Cost based on N plus K_2O content.

Anhydrous Ammonia

The use of anhydrous ammonia as the major source of nitrogen in the granulation process adds a great deal of flexibility to the process because the heat generated when ammonia is reacted with acid materials, for example, phosphoric acid, sulfuric acid, or superphosphate, usually helps to promote granulation and evaporate water. However, the main disadvantages of ammonia as the primary source of nitrogen include (1) the need for specialized transport, storage, and handling facilities, (2) the need for other materials to neutralize (fix) the ammonia in a solid granular form (Table 2), and (3) limitations on the amount of ammonia that can be reacted and fixed in the granular product, which usually limits the level of nitrogen in the NPK product to about 15%.

Ammonium Nitrate

The use of ammonium nitrate in the production of NPKs is very common. However, because of its explosive/fire potential, international transport and trade of bulk material are not widely practiced. When ammonium nitrate is used to produce granular NPKs, it is usually in the form of a solution.

In the United States, these solutions are referred to as "ammoniating solutions" usually containing a mixture of

1. Fertilizer Production Specialist, International Fertilizer Development Center (IFDC) – United States.

Table 2. Quantity of Material Required to Neutralize (Fix) Ammonia

Material	Quantity Required to Fix 1 t of Ammonia (t)	Solid Reaction Product
Single superphosphate (18% P_2O_5)	19-20	Ammonium phosphate/calcium phosphate/calcium sulfate
Triple superphosphate (46% P_2O_5)	11	Ammonium phosphate/calcium phosphate
Sulfuric acid (98% H_2SO_4)	3	Ammonium sulfate
Phosphoric acid (54% P_2O_5)	4-8	Mono- or diammonium phosphate
Nitric acid (60% HNO_3)	6.2	Ammonium nitrate

ammonia, ammonium nitrate, and water. A typical ammoniating solution contains 44%-49% N. In some locations, a concentrated ammonium nitrate solution is produced on site and is fed directly to the NPK granulation process. Again, for safety reasons the solution concentration usually does not exceed 87%-90% (about 30% N). World annual production of ammonium nitrate in all forms, including calcium ammonium nitrate (26% N), amounts to about 50 million tonnes of product, or about 16 million tonnes N.

Ammonium Sulfate

Solid ammonium sulfate is widely used to produce granular NPKs. The most common source is byproduct material from the iron and steel industry (coke ovens) and caprolactam industry (nylon-intermediate). Annual world production of ammonium sulfate amounts to about 20 million tonnes.

A major advantage of using ammonium sulfate for the production of NPKs is that it provides a source of agronomic sulfur as well as nitrogen. The major disadvantage, however, is its relatively low nitrogen content. This causes its delivered cost to the production site to be relatively high, especially if ocean transport or long-distance land transport is required.

Sodium and Potassium Nitrate

These two sources of nitrogen are relatively expensive. They are most often used to produce granular NPKs for specialty-type crops such as tobacco, melons, and various vegetables. These materials are normally added to the granulation process as solids in the form of crystals or prills.

World production of sodium nitrate (16-0-0) and potassium nitrate (13-0-44) amounts to a total of about 1 million tonnes of product, with Chile and Israel being the major producers. A significant amount of these materials is used also for non-fertilizer industrial purposes.

Urea

In addition to being widely available and competitively priced in the world market, urea also offers the following advantages to the NPK granulator.

- Unlike ammonia, urea does not require other raw materials for reaction to "fix" the nitrogen in the granule structure.
- Urea promotes granulation at relatively low temperature and moisture conditions.
- Urea makes it possible to produce relatively high-nitrogen NPKs.
- Urea is easy and safe to transport, handle, and store.

The major disadvantages of using urea as the main nitrogen source in the production of NPKs include the following:

- Urea increases the hygroscopic (moisture absorption) properties of NPKs and adversely affects their storage properties.
- Production and bulk storage areas for urea-based NPKs must be humidity controlled at 50% relative humidity or less.
- Moisture-proof bagging is required in most locations.
- Special plant design features are required, especially with regard to drying, cooling, and screening.
- Special care is required when using urea-based fertilizers to minimize the loss of nitrogen and ensure maximum agronomic effectiveness.

An in-depth analysis of the advantages and disadvantages of using urea to produce NPKs, together with methods for coping with the disadvantages, is covered in the papers and deliberations recorded in these proceedings.

Experience With Production of Urea-Based High-Grade NPK Fertilizers

S. K. Chatterjee[1]

Abstract

Zuari Agro Chemicals Limited (ZACL) of Goa, India, manufactures the richest urea-based complex fertilizer grade (19-19-19) as well as other urea-based grades. The various parameters affecting the process of granulation and drying, and therefore the overall plant performance, are highlighted. The problems experienced, which are aggravated by the humid conditions prevailing in Goa, are also discussed. The measures taken to control the product quality and pollution are indicated.

Introduction

Zuari Agro Chemicals Limited is a company jointly sponsored by the House of Birlas and USX Corporation of the United States. The fertilizer complex comprises a naphtha-based 660-tpd ammonia plant, a 1,140-tpd urea plant, a 535-tpd NPK plant, and a 500-tpd DAP plant, along with related utilities for water treatment, steam and power generation, effluent treatment, raw materials handling, bagging, and product dispatch.

The NPK plant was engineered and constructed by Toyo Engineering Corporation of Japan for the production of 535 tpd of complex fertilizer grade 28-28-0. The plant is also equipped for the production of other grades, namely, 14-35-14 and 19-19-19. ZACL is the only company producing the richest balanced fertilizer, 19-19-19 utilizing ammonia, urea, phosphoric acid, and muriate of potash as raw materials.

Need for Urea-Based Fertilizers

In the earlier days of development of complex fertilizers, only low-analysis formulations were produced using ammonium sulfate and other such sources of nitrogen. However, the availability of urea as a source of nitrogen made it possible to produce high-analysis grades. Any other source of nitrogen such as ammonium sulfate (21% N) or ammonium nitrate (35% N) cannot result in grades like 28-28-0, 19-19-19, and 26-13-13. For example, in the case of a 1-1 formulation, ammoniation of merchant-grade phosphoric acid to a mole ratio of 1.8 will produce 26-26-0 if ammonium nitrate is used or 28.5-28.5-0 if urea is used. For a product of 1-1-1 formulation, it is possible to make 17-17-17 with ammonium nitrate or 14-14-14 with ammonium sulfate, as compared with 19-19-19 if urea is used.

The popularity of high-analysis, balanced NP and NPK fertilizers increased rapidly because of the improved economics of higher total plant food content per unit of fertilizer applied. Considerations such as soil characteristics, climatic conditions, and cropping patterns determine the type of formulations required by farmers. In most cases, the N-P_2O_5-K_2O ratios in NP and NPK grades are preferably 1-1 or 1-1-1. Based on market demand, the high-analysis grades most often produced are 28-28-0, 19-19-19, and 26-13-13. For the production of such high nitrogen-containing complex fertilizers, urea is required.

The production of high-analysis urea-based NPK fertilizers offers several major advantages, including (1) savings in distribution cost per tonne of plant nutrient content (due to higher concentration) and (2) low cost of production. These advantages are based on the following factors:

- Urea is a cheaper source of nitrogen as compared with ammonium sulfate or ammonium nitrate.
- Urea is generally available at the site of most of the compound fertilizer manufacturers in India.
- Handling of bulk urea is considerably easier than handling ammonium nitrate due to the difference in their critical relative humidities.
- Handling of urea is safer than handling of ammonium nitrate, which has the potential to form an explosive or combustible mixture.
- The fines and oversize material inevitably produced in a captive urea plant can be consumed in urea-based formulations, helping to improve the product quality of urea.

1. Vice President (Technical), Zuari Agro Chemicals Limited (ZACL) – India.

- In countries like India where no natural source of sulfur is available, the use of urea instead of ammonium sulfate results in a saving of precious foreign exchange.

Technology of Urea-Based NPK Fertilizers

Urea is used in the formulation of granulated compound fertilizers in one of the following ways:

- Urea/superphosphate-based products using ordinary superphosphate or triple superphosphate along with muriate of potash.
- Urea/ammonium phosphate-based products using either solid mono- or diammonium phosphate (MAP or DAP) or ammoniation of wet-process phosphoric acid.

At ZACL, we manufacture urea/ammonium phosphate-based complex fertilizers using the conventional phosphoric acid neutralization process. The plant was commissioned in 1975. A description of the process, along with an account of our experience with the production of such high-grade compound fertilizers, follows.

Process Description

The flow of wet materials in the ZACL NPK plant is shown in Figure 1. Imported merchant-grade phosphoric acid is neutralized in a preneutralizer (PN) with gaseous ammonia. The NH_3:H_3PO_4 mole ratio of the ammonium phosphate slurry is adjusted to 1.40-1.45 in the PN. The slurry having 80%-82% solids (18%-20% water) at a temperature of 115°-118°C is pumped to the ammoniator granulator (AG) where further ammoniation is carried out to achieve a final mole ratio of 1.68 to 1.7 for the 19-19-19 grade. A TVA-type rotary drum granulator is used in our plant. In the AG, the recycle fines, prilled urea, and potash are added. Slurry is sprayed over the

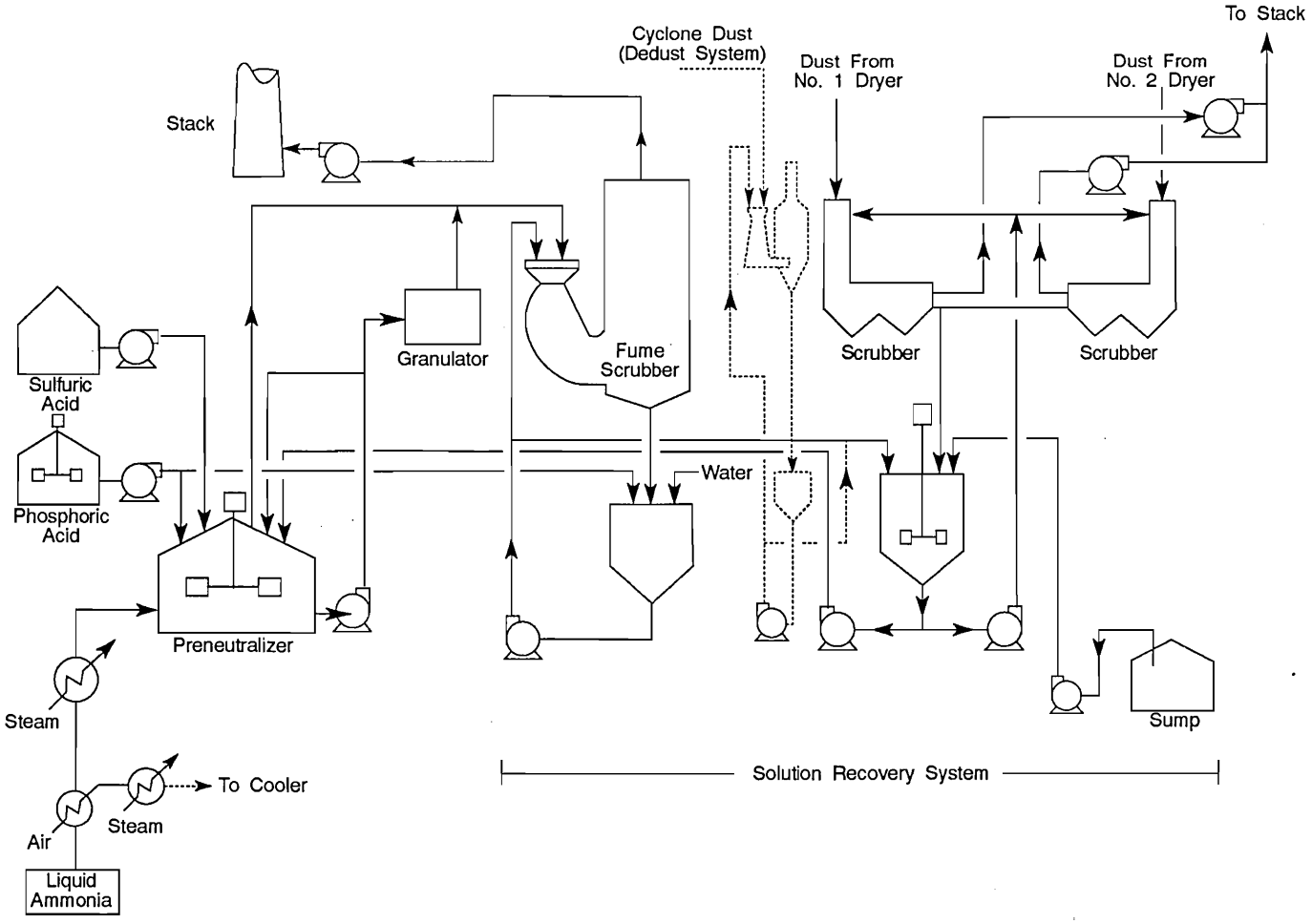

Figure 1. Process Flow Diagram of ZACL NPK Plant – Wet Section.

rolling mass, and ammoniation is carried out by injection of liquid ammonia through a sparger located beneath the bed of material in the AG. The heat of reaction in the AG evaporates part of the free water from the slurry and also increases the temperature of the material. The extent of ammoniation in the AG depends upon the requirement of ammoniacal nitrogen in the final product. Since ammonia is the cheapest form of nitrogen, it is desirable to maximize its use in the AG for high-analysis products. Another advantage of using a maximum amount of ammonia in the AG is a reduced dryer load because more water evaporates in the AG as a result of additional heat of reaction. However, this advantage is offset to some extent by the higher loss of ammonia from the fume scrubber when the higher level of ammoniation is performed in the AG; thus, ammoniation and ammonia losses must be optimized.

The flow of dry materials in the process is shown in Figure 2. The granular material from the AG is fed to the first rotary dryer where it comes in contact with a cocurrent stream of hot air to decrease the moisture level to 1.6%-1.7%. The partially dried material then enters the second dryer in which further drying is achieved by a countercurrent stream of hot air to achieve a moisture level of less than 1.5%. The first and second dryers are both 3.5 m in diameter and 43 m long and operate at 4 rpm.

Product-size material from the discharge of the second dryer is separated using three stages of screening: one screen removes undersize material; an oversize screen removes oversize material, which is crushed in a cage mill and recycled; and a second undersize screen again removes any undersize material that escaped the first screen. All the screens are the single-deck type which facilitates easy cleaning. This feature is required for high-analysis urea-based grades. The product-size material is coated and sent to storage and bagging.

The scrubbing system comprises (1) a fume scrubber for recovery of unreacted ammonia from the PN and AG, (2) a scrubber for exhaust gases from the No. 1 dryer, (3) an independent scrubber for gases from the No. 2 dryer, and (4) a dedusting scrubber. About 20% of the total acid consumed, and all process water required, are added to the fume scrubber liquor tank. The same liquor

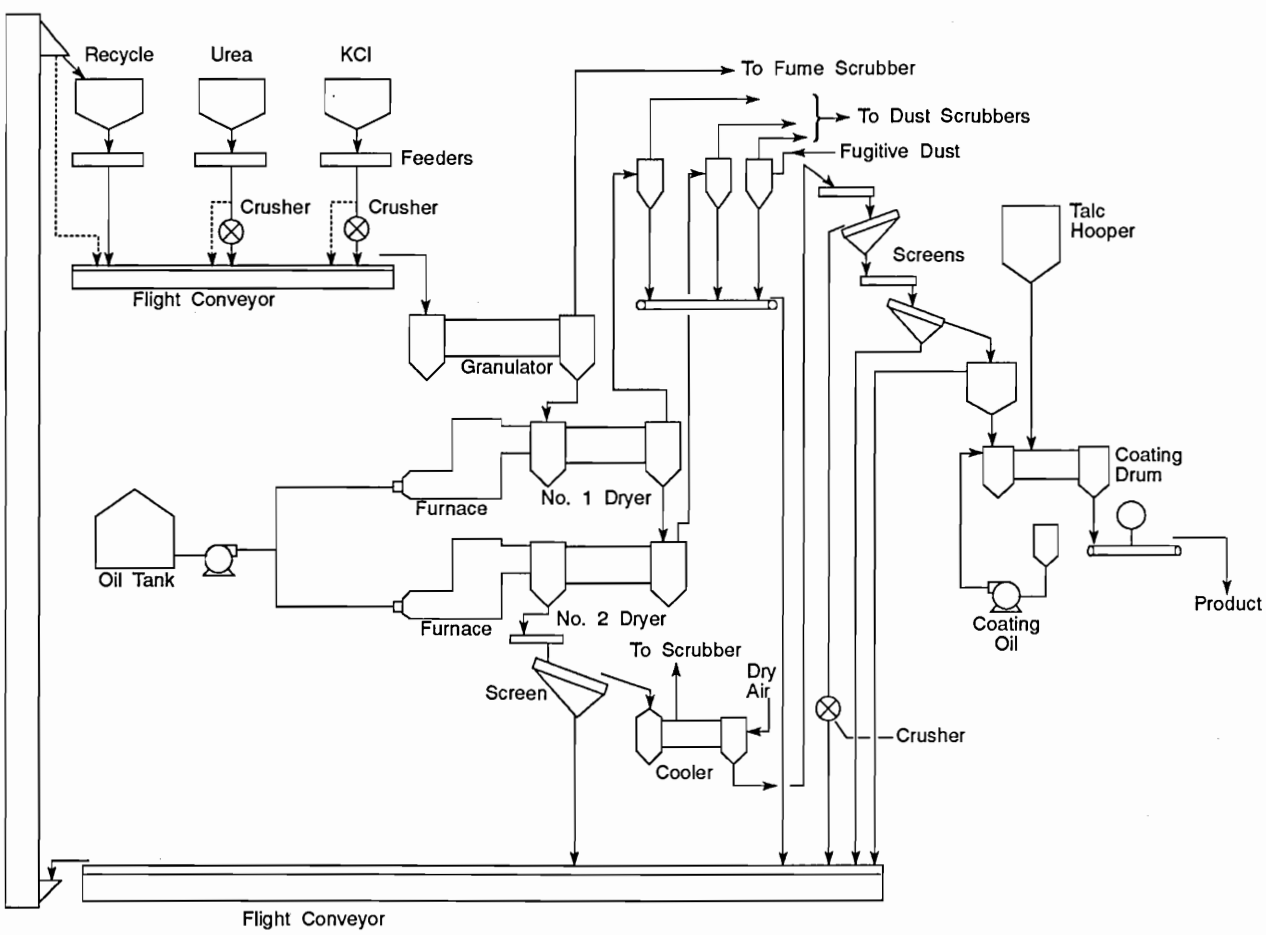

Figure 2. Process Flow Diagram of ZACL NPK Plant – Dry Section.

is then pumped to both dryer scrubbers via the dedusting scrubber. The final liquor from the dust scrubber tank is pumped to the PN.

Operating Experience

Neutralization Section–The major problem experienced in the operation of the PN has been foaming caused by excessive dust generation and high urea concentration in the scrubber liquor (about 5%). This problem is more prominent during the production of 28-28-0 grade, which requires a larger quantity of urea. The main reason for the dust formation is the breaking of the granules in the dryer. It has been our experience that excessive foaming reduces the slurry pumping rate and consequently decreases the production rate. We try to reduce the level of foaming by using antifoamer, as well as by optimizing the dryer conditions to decrease the amount of dust generated.

Ammoniator-Granulator Section–Because urea-based grades have a higher solubility than most other fertilizers, as shown in Figure 3, granulation is very sensitive to liquid phase. Even a slight variation in slurry condition, slurry flow rate, or the flow rate of solids (recycle) disturbs the granulation resulting in the formation of excessive fines or lumps and balls. The design recycle-to-product ratio is 6.7 for 28-28-0 and 5.6 for 19-19-19 based on a moisture content of 2.5% and 2.3%, respectively, at the AG outlet. However, experience has enabled us to reduce these recycle ratios and maintain a moisture content of about 2.6% at the AG outlet.

In order to control the conditions in the AG at the optimum level, it is desirable to vary only the recycled fines while keeping the slurry rate and the feed rates of urea and potash constant. In order to achieve this, our plant was equipped with a bin and weigh feeder for recycle fines. However, due to the high relative humidity prevailing at Goa (more than 80%), and the material being very hygroscopic, it was found that recycle fines would not flow uniformly from the bin despite the provision of vibrators. Thus this system became a hindrance rather than a help in maintaining the desired conditions in the AG. We therefore had no choice but to remove the recycle bin and feeder. Subsequently, a steady rate of recycle has been achieved by controlling the rate of product takeout (returning the balance to recycle) using a product surge hopper. Another problem experienced was frequent jamming of the urea and potash crushers resulting in frequent shutdowns. Both of these crushers were bypassed, and uncrushed urea prills and potash are now fed to the AG.

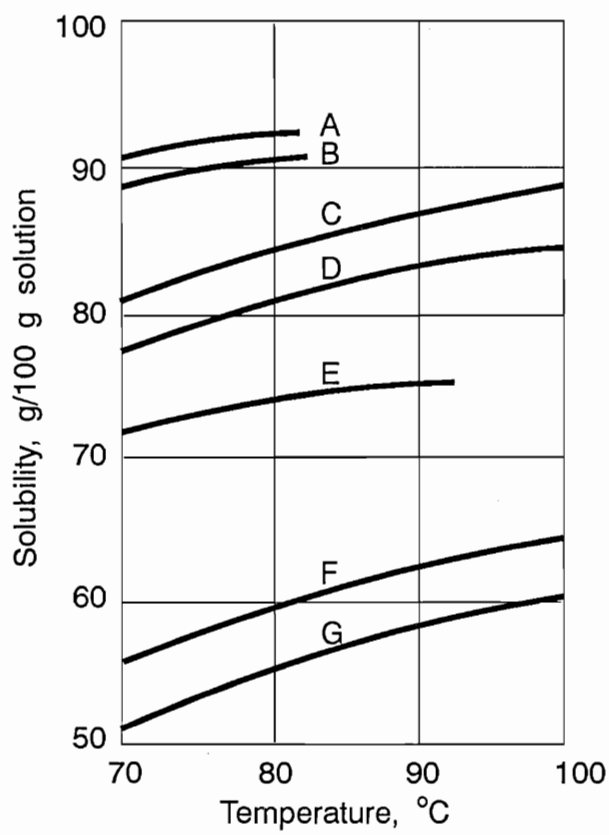

Legend
A 19-19-19 (Urea, DAP, KCl)
B 18-18-18 (Urea, MAP, KCl)
C 17-17-17 (Ammonium nitrate, DAP, KCl)
D 15-15-15 (Ammonium nitrate, ammonium sulfate, MAP, KCl)
E 15-15-15 (Urea, ammonium sulfate, MAP, TSP, KCl)
F 14-14-14 (Ammonium sulfate, DAP, KCl)
G 14-14-14 (Ammonium sulfate, MAP, KCl)

Figure 3. Solubility of Urea-Based NPK Fertilizers.

A proper size of material at the discharge of the granulator is a very important operating parameter for urea-based NPKs. We have faced considerable difficulties in granulation. The product exiting the granulator is just agglomerated and normally not formed into good (strong) granules. Our AG is 3.5 m in diameter and 9 m long, and it operates at 9.0 rpm. The retainer ring is located 6 m from the inlet. The slurry spray is completed in the first 3 m, and ammoniation takes place up to 5.5 m from the inlet. After the retainer ring, the material simply rolls and granulation takes place. If too much undergranulation occurs, we inject steam into the bed of material using manual control.

The locations of the slurry nozzle and ammonia sparger play a very important role in granulation. The original slurry nozzles were fitted in the 4:30 o'clock position when viewed from the discharge of the AG; instead of using an ammonia sparger, we used pipe-type injectors embedded in the rolling mass. This arrangement resulted in very poor granule formation, and the loss of ammonia was high. The slurry nozzles were then replaced by slots in the header, and the slurry was dribbled on the bed in the 6 o'clock position. This arrangement was further modified by the use of spray nozzles, and a horizontal slotted pipe-type ammonia sparger was installed. These modifications resulted in considerable improvement in granulation. However, further improvement is needed, and we propose now to locate the slurry nozzles in a manner so that the spray is horizontal and falls more fully on the rolling mass of material in the granulator. We also plan to relocate the ammonia sparger to the 4:30 o'clock position. This will help to ensure that improved ammoniation will take place and that proper size granules are formed.

Our granulator does not have rubber paneling and there is a lot of buildup in the granulator; this must be removed by the scraper. Granule formation is also poor due to the limited rolling action in the absence of rubber panels. Our plant is based on the technology of the 1970s, and since then a lot of changes have taken place. We propose to replace the granulator totally with a rubber-paneled unit in due course.

In addition to the above, to obtain proper granulation there should be an optimum amount of liquid phase and heat release in the granulator. We have checked the liquid phase and the heat of reaction in the granulator. The liquid phase is 300 kg/tonne of product, which is satisfactory; however, the heat release is only 20,000 kcal/tonne, which is grossly inadequate. To increase this heat release, we propose to increase the ammoniation in the granulator by operating the PN at a 0.5-0.6 mole ratio and bringing the mole ratio up to 1.6 in the granulator. With this increased level of ammoniation, escape of ammonia from the granulator is likely to increase, in which case we propose to scrub the off gases in the fume scrubber by adding additional phosphoric acid and taking the overflow into the PN. Presently, we maintain the pH at 5-6 in the fume scrubber, and we would like to bring this down to a pH of 2; however, this may increase the emission of fluorine from the stack.

Drying Section – It is interesting to note that granulation also takes place in the dryer where the material temperature is high. We have removed the first row of flights in the first dryer to facilitate granule formation. In the dryer, the rate of drying depends upon the material temperature and its moisture content as well as the temperature of hot air and its humidity. Urea-based fertilizers having a low melting point pose a limitation on the allowable drying temperature to avoid fusing of material. The hot air temperature used by ZACL is 130°-140°C at the No. 1 dryer inlet and 90°-100°C at the No. 2 dryer inlet for all grades. The temperature of the material at the outlet of the No. 1 dryer is 64°C and remains about the same at the outlet of the second dryer.

The drying operation is very critical in the sense that excessive dust is produced if the material is overdried and the material remains sticky if it is underdried. In order to maintain proper conditions in the drying operation, dehumidified air is used as dilution air in the dryer furnaces to control the relative humidity of the inlet air. We have noticed that product breakage occurs in the first dryer and further granulation occurs in the second dryer. Because of fusion of material in the second dryer due to low moisture and excessive temperature, deposits of material occur, and the dryer becomes overloaded.

We have used the second dryer as a cooler to avoid the problem of fusion and deposition (buildup). When we did this, the drying was still very effective but the granulation was very poor because of the low temperature of the recycle material and low moisture content. However, this cooling improved the hardness of the material, and there was better screening; the performance of the cage mill also improved considerably.

We propose to use the No. 2 dryer as a cooler again after changing to the new operating parameters (0.6 mole ratio in the preneutralizer and more ammoniation in the granulator).

Screening, Recycle, and Product Coating Section – The problem faced in the screening section is the failure of vibrators and tearing of the screen meshes. The original electromagnetic-type vibrators were replaced with eccentric-type motor-driven vibrators. All screens are of the slotted opening type. We initially had a first screen

with a 2.25-mm by 50-mm opening, oversize screen with a 4-mm by 20-mm opening, and undersize screen with a 2.5-mm by 10-mm opening. Because the Fertilizer Control Order (FCO) specifies product size of 1-4 mm, we changed the slotted opening-type screen size to 2 mm by 20 mm, 4.5 mm by 35 mm, and 2 mm by 20 mm, respectively. This has helped in drawing more product size material from the system, thereby increasing production appreciably.

The critical relative humidity of urea-based NPK grades produced by ZACL is 45%-50% at 30°C, and the relative humidity prevailing at Goa for most of the year is about 80%. Therefore, the product is coated with a suitable coating agent to retain its storage characteristics, particularly in off-seasons, when the bagged material lies in warehouses for 3 months. Initially, the product was coated with talc and oil. The problem of separation of talc was noticed, and the coating was not effective. At present the product is coated with a liquid coating agent only, and this has given good results.

Scrubbing Section–We indicated earlier that the major problem faced with foaming in the PN is caused by hydrolysis of urea contained in the scrubber solution. We have made a provision for steam injection in the dust scrubber liquor tank to facilitate partial removal of CO_2. It has been observed that foaming in the PN is somewhat reduced as a result.

Blockage of the dryer cyclones and buildup of solids in ducts result in considerable overloading of the scrubbers and affect the air flow through the dryers. Manometers were installed at various locations, and the cyclones, ducts, and fans are cleaned thoroughly once every 2 weeks of plant operation to overcome this problem. Presently, the mole ratio in the scrubber liquor is maintained at 1.2-1.3. We propose to feed a larger portion of acid to the fume scrubber liquor tank; this is expected to reduce the mole ratio as well as the ammonia loss and help to decrease the problem of choking of the venturi system.

Quality Control

It is essential that the different grades conform in quality to the specifications laid down in the FCO instituted by the Government of India. The FCO permits only the variation of 0.6 of a unit for an individual nutrient and a total of 1.5 units for the 19-19-19 NPK grade. The feed rates of urea and potash are controlled accurately using belt-type weigh feeders. The flow rates of phosphoric acid, ammonia, and slurry are also controlled using magnetic flowmeters. The accurate control of the raw material feed rates has helped to maintain good product quality. Depending upon the product analysis, the feed rates of urea and potash are adjusted accordingly. The samples are collected on 1½-hour intervals from the final product conveyor belt. To minimize the variation, the production of each 8-hour shift is stored in a separate bin. Once in 30 minutes, samples are collected from the different portions of the pile and a composite is made and analyzed. The average analysis has to conform to FCO specifications; otherwise the material is declared "off-spec" and recycled back to the system. Only the material conforming to the FCO specifications is bagged and dispatched.

Because our product is very hygroscopic and moisture absorption generally results in reduced mechanical strength and increased caking, the product is coated with a special coating agent. Deterioration of the product quality during storage and bagging is minimized, as the NPK bulk storage building is dehumidified.

Pollution Control

As described earlier, unreacted ammonia from the PN and the AG and exhaust gases from the first and second dryer cyclones and the dedusting cyclones are scrubbed with recovered solution. A portion of phosphoric acid used in the process is added to the recovered solution tank for improved scrubbing (recovery) of ammonia. The optimum pH of the scrubbing liquor is maintained at 5-6 to minimize the problem of buildup in the dust scrubbers and to reduce foaming and simultaneously achieve the desired ammonia scrubbing efficiency.

To overcome the problem of occasional dust exhaust from the chimney, a constant watch is kept on the performance of the cyclones. For this purpose, manometer readings at different locations along the route of the dust-handling ducts, from the point of dust pickup

S. K. Chatterjee

to the exhaust stack, are constantly monitored, and timely cleaning is carried out as indicated by the monometer readings. Under normal operating conditions, the exhaust from the stack is not visible.

No liquid effluent is discharged from the plant. Pump gland leakage, overflows, and drainage from scrubbers and other process vessels are collected in a waterproof and acid-proof brick-lined tank having three compartments. The liquor collected in the last compartment is pumped to the recovery section at a steady rate. In order to avoid settling of sludge, the solution in the tank is constantly agitated using steam spargers. All solid spillage in the plant is recovered on a day-to-day basis and recycled to the system. Because the 19-19-19 grade is very hygroscopic, any spillage becomes wet quickly, causing additional problems in its recovery.

Conclusion

Economics favor the use of urea for manufacturing high-analysis NPK grades. The major problems, namely, foaming in the preneutralizer and buildup of material in the equipment, were overcome by optimizing the operating conditions and through certain equipment modifications. We are continuing to implement changes in the operation as mentioned earlier, and these changes are likely to improve the plant performance further and improve production capacity. Once we improve the granulation and decrease the recycle ratio to 3.0, we propose to consider use of a pipe reactor to further optimize the production unit.

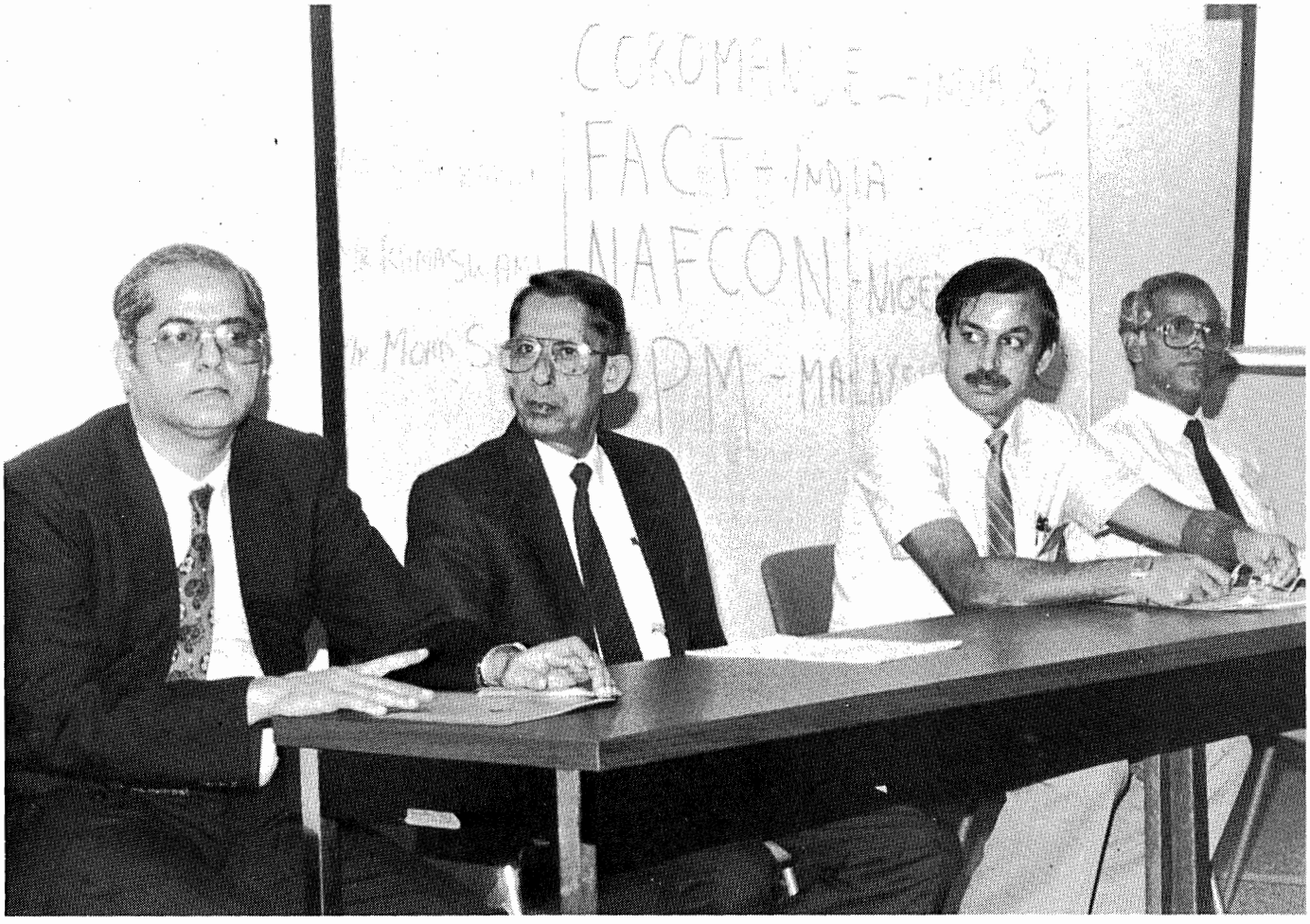

Operational Experiences With NP-NPK Granulation at Coromandel Fertilisers Limited – India

S. Ramadurai[1]

Abstract

A large fertilizer granulation plant of the Tennessee Valley Authority (TVA) preneutralizer-rotary granulator type was built in the 1960s in Andhra Pradesh at Visakhapatnam, India, by a consortium (Coromandel Fertilisers Limited) composed of Chevron Chemical Company and International Minerals and Chemical Corporation (IMC) of the United States and EID Parry Limited of India. On the basis of pilot-plant work performed by TVA and IMC, the process was designed to include relatively hygroscopic urea-ammonium phosphate (UAP) grades; thus, dehumidification was provided in the production, storage, and bagging areas. This paper describes the plant process and operating experience including plant trials with a UAP grade containing potash and with a pipe reactor as a replacement for the preneutralizer. In general, plant performance has been highly satisfactory with the 28-28-0 UAP grade and with urea-free 20-20-0 and 14-35-14 grades. Production was diversified for a period of time in 1969 to include 22-22-11 based on UAP-KCl; although a satisfactory product could be made, problems with granulation resulted in unsteady operation. In other plant tests, the use of the pipe reactor resulted in greatly improved fuel economy, but production capacity was less than expected.

Introduction

High-analysis NP and NPK granular fertilizers have been successfully manufactured by Coromandel Fertilisers Limited (CFL) with a high proportion of solid urea as the principal source of nitrogen. Standardization and control of various operating parameters have resulted in high rates of production and a good granular product.

During the early 1960s, the Tennessee Valley Authority of the United States (TVA) carried out pilot-plant work on an adaptation of its highly successful diammonium phosphate (DAP) granulation process and confirmed, in a preliminary way, the feasibility of granulation of a urea-ammonium phosphate product (UAP) using their typical ammoniator-granulator circuit. It was around this time, that Chevron Chemical Company and International Minerals and Chemical Corporation (IMC) of the United States and EID Parry Limited (India) came together as a consortium to promote and set up an integrated complex fertilizer plant in Andhra Pradesh at Visakhapatnam.

S. Ramadurai

Based on the early investigation of various factors like the market, economics, agronomics, climate, and other relevant considerations, urea ammonium phosphate (based on prilled urea) was selected as the product proposed to be manufactured at the plant, as this type of product was uniquely suited to the conditions in India. The basic raw materials used to produce this new product would also result in the highest possible nutrient level. It was expected that the plant would have the flexibility to manufacture fertilizers of different grades without any major change to the installed facilities. To provide further confirmation of the feasibility of making the proposed new UAP product (28-28-0), and to develop commercial design data, a 10-tpd pilot plant was constructed and operated at IMC's Florida Development Laboratory. The pilot-plant program further demonstrated that the TVA continuous ammoniator-granulator process was technologically sound and could be easily adopted for making the

1. Technical Manager, Coromandel Fertilisers Limited (CFL) – India.

new UAP grade with relatively few modifications to a typical DAP manufacturing facility.

Process Description

The main raw materials used in the granulation process are (a) wet-process phosphoric acid of 28%-30% and 46%-48% P_2O_5 concentration, (b) anhydrous ammonia, and (c) urea prills. Muriate of potash is used for making NPK formulations.

The 46%-48% phosphoric acid and the weak phosphoric acid from the scrubber recovery system are partly neutralized to a NH_3:H_3PO_4 mole ratio of 1.4 to 1.45 with anhydrous ammonia in the reactor (preneutralizer); further ammoniation of this mixture is performed in the ammoniator-granulator. The mixture of monoammonium and diammonium phosphate formed in the reactor has the maximum solubility at this mole ratio, and the resultant slurry can be handled with relative ease with slurry pumps at a relatively low moisture level of 16%-18%. This is very important because an excessive increase in water fed to the granulator circuit adversely affects the granulation of UAP formulations.

The ammonium phosphate slurry from the reactor is pumped to the granulator and evenly distributed over a bed of recycled material consisting of prilled urea, undersize granules from the screens, crushed oversize from the cage mills, and fertilizer dust from dust collecting cyclones. Vapor ammonia is introduced at this stage to further ammoniate the ammonium phosphate slurry to a 1.6 mole ratio. The granules discharged from the granulator are dried to a moisture level of 1% in a cocurrent rotary dryer. Drying is followed by screening to separate the onsize material as the final product. The oversize material from the screens is crushed and along with the undersize and the dust from the cyclones is returned to the granulator. Recycle control is provided by returning part of the onsize product to the granulator. The prilled urea is introduced into the granulator along with recycled material.

A scrubbing system is used to recover unreacted ammonia vapor vented from the reactor and granulator and fine dust particles from the dryer and cooler cyclones. The scrubbing is achieved by intimately contacting the effluents with a weak circulating phosphoric acid solution in a venturi-type scrubber. A 30% P_2O_5 phosphoric acid solution and process water are continuously fed to the scrubber system to maintain the acidity required for the absorption of ammonia and to give sufficient dilution to keep the ammonium phosphate and recovered dust in solution. A continuous stream of weak scrubber recycle acid is fed back to the reactor along with 48% P_2O_5 phosphoric acid. The CFL fertilizer plant makes UAP 28-28-0 and 14-35-14 (a urea-free NPK formulation). The specifications of these two products are given in Table 1.

Table 1. Specifications of UAP Products[a]

	28-28-0	14-35-14
Total nitrogen (N)	28.0	14.0
Nitrate N	Nil	Nil
Ammoniacal N (min.)	9.0	14.0
Total available phosphate, as P_2O_5 (min.)	28.0	35.0
Water-soluble phosphate, as P_2O_5 (min.)	25.2	29.0
Free moisture (max.)	1.5	1.0
Water-soluble K_2O	-	14.0

a. Product is uniform in color, shape, and texture. Uncoated urea prills are not visible.

Important Aspects of UAP Plant Operation

The operating experience of CFL during the manufacture of UAP has provided an understanding of the effects of various process variables, leading to better control of the operating variables and an improvement in the overall performance of the plant. Of the various factors, the following have been found to be critical from the point of view of continuous operation and production of an acceptable product at peak loads.

- Reactor and scrubber control.
- Granulation control.
- Drying and cooling control.

Reactor and Scrubber Control

In view of the influence of the temperature and moisture control on the performance of the granulation and drying operations with UAP formulations, a good understanding of the complete water and heat balance of the process is important. The operating parameters of the reactor are:

- Slurry temperature 116°-120°C
- NH_3:H_3PO_4 mole ratio 1.40-1.45
- Slurry specific gravity 1.5-1.55
- Slurry pH 5-5.5
- Slurry free moisture 16%-18%

Most of the water enters the process by way of water recovered from the raw water injection on the impellers of the scrubber fans, which is needed to keep them clean. This helps in increasing the solubility of ammonium phosphate and fertilizer dust in the scrubber system. The weak and strong phosphoric acid feeds also contribute their share of water depending upon the actual concentration of acid used. A major quantity of water is evaporated by the heat of neutralization in the reactor, leaving behind a concentrated ammonium phosphate solution. The moist slurry is the main source of moisture entering the granulation system; thus, necessary care should be taken in the operation of the reactor and scrubber systems to ensure that moisture input and evaporation balance each other to yield a low-moisture slurry. This should be consistent with satisfactory fluidity of the resultant slurry. Ammonium phosphates have maximum solubility at a mole ratio of 1.40 to 1.45 and, therefore, the mole ratio of the slurry is maintained at this level by proper adjustment of the ammonia flow to the reactor. Excessive solid input to the reactor by way of unfiltered gypsum from wet-process phosphoric acid and undissolved salts in the weak acid generated due to improper control of the pH and moisture of the acid in the scrubber recovery system have a profound effect on the pumpability of the slurry. In order to contain foaming in the reactor and scrubber, antifoam is also added to the scrubber sump. The antifoam is added through a dosing pump, and the quantity of antifoam used is closely monitored.

The operating parameters of the scrubber system follow:

- Scrubber liquor specific gravity 1.27-1.29
- Scrubber liquor NH_3:H_3PO_4 mole ratio 1.1-1.2
- Scrubber liquor temperature 50°-55°C
- Scrubber liquor P_2O_5 content 20%-21%

The current liquid-to-gas ratio in the reactor/granulator scrubber is 290 L/100 m^3 of gas. The possibility of handling higher airflows and liquid flows is being studied. Scaling in the venturi scrubbers occurs gradually and is removed during scheduled shutdowns.

Granulation Control

Effective control of granulation is the key to successful operation of the plant to achieve high production rates and good-quality product. Ideally, it would be desirable to be able to control granulation with a low recycle rate and a minimum moisture level at the granulator discharge to obtain granules of a uniform size distribution and chemical composition with good crushing strength.

The granulator originally provided was a modified TVA-type rotary ammoniator-granulator with a sawtooth-type slurry distribution system. A retaining dam located midway separated the ammoniation and granulating zones. An ammonia sparger pipe was located in the bed of material in the ammoniation zone. A mechanical scraper was located inside the granulator to continuously remove any material buildup from the shell. The granulation zone, on the other hand, has no internals and operates with a relatively shallow bed of material.

When the plant was first started on a short trial run producing DAP, it was found that granulation control was relatively easy. However, the addition of urea soon resulted in an unsteady operation, and granulation became very difficult. It was observed that the distribution of the slurry was far from satisfactory, resulting in dry and wet zones in different areas along the length of the ammoniation zone. Heavy material buildup on the internals further aggravated the conditions inside the granulator by inhibiting the rolling and tumbling action that is essential for good granulation. The sawtooth slurry distribution was replaced with spray nozzles, and the number of supports for the ammonia sparger and the height of the retaining dam were both decreased. These changes contributed to a better rolling and tumbling action and helped in the formation of uniformly sized granules. The operating parameters for the granulator follow:

- Bed temperature 75°-79°C
- Moisture of material at outlet 2.5%-3%
- Percentage of product size material at outlet 35%-40%
- NH_3:H_3PO_4 mole ratio (outlet) 1.6
- pH of product. 6.5-7.0
- Airflow through granulator 13,600 m^3/h (8,000 cfm)

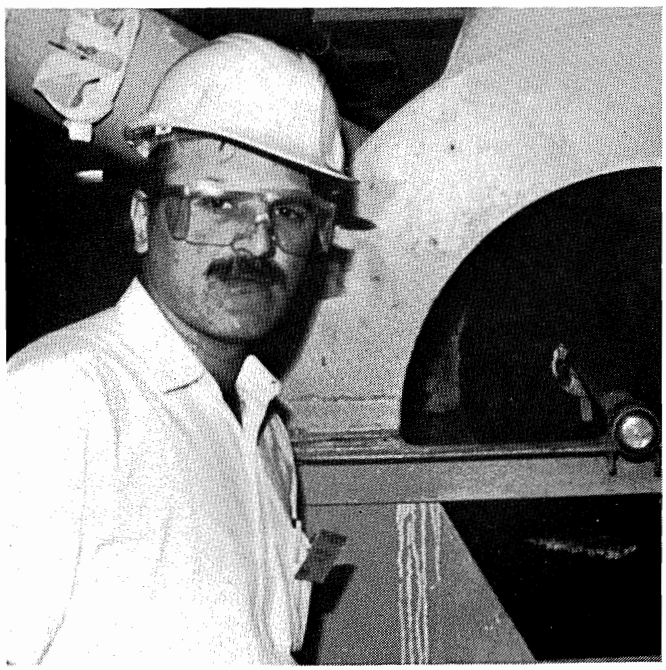

The ratio of liquid phase to solid phase is an important factor in granulation control. Control of granulation is accomplished by adjusting the recycle-to-product ratio by returning some product material to the granulator along with undersize material. The flow of slurry to the granulator is varied only to either change the operating load or to correct any abnormal conditions in the granulator. For proper granulation, the correct moisture content and temperature have to be maintained in the granulator. The ideal conditions for granulation of CFL grades are 2.5%-3.0% moisture at the outlet of the granulator and a temperature of 75°-79°C. Because of the generally high solubility of urea-ammonium phosphate, coupled with the fact that an elevated temperature increases solubility, sufficient liquid phase for proper granulation can be generated at a low moisture level. These conditions favored granulation of UAP formulations like 28-28-0 to yield strong, round granules with practically no uncoated (visible) urea prills.

The addition of ammonia to the granulator has an overall beneficial effect on the granulation process. About 15% of the total ammonia input to the plant is introduced into the granulator. A product mole ratio of 1.6 and a bed temperature of 75°-79°C are maintained. A decrease in ammoniation below 1.6 results in a problem of high moisture in the granulator discharge.

Airflow through the granulator is an important factor in operation of the granulator. The airflow through the granulator removes the water vapor generated in the granulator and acts as a predryer to help reduce the moisture load on the dryer. At present, the air velocity through the granulator is only about 0.6 m/second, and we are thinking of increasing this to about 1.0 m/second.

Drying and Cooling

Drying is an important and critical step in the production of UAP products. The products must be dried to less than 1.0% moisture to ensure satisfactory keeping qualities in bagged as well as bulk storage. UAP granules of high moisture content are generally weak in crushing strength and tend to disintegrate into fines and dust upon handling. The rate of drying is dependent upon the product temperature and increases with increasing temperature. However, because UAP is heat sensitive, the material temperature should be kept within tolerable limits to avoid softening of the product and to minimize hydrolysis and loss of urea-nitrogen present in the formulations.

A rotary dryer is used for drying the product. Cocurrent drying is used because it enables drying to be carried out close to permitted maximum temperature almost throughout the length of the dryer. The operating parameters of the dryer follow:

- Airflow — 59,465 m^3/h (35,000 cfm)
- Air temperature at dryer inlet — 200°-220°C
- Air temperature at dryer outlet — 75°-80°C
- Material moisture at dryer inlet — 2.5%-3.0%
- Material moisture at dryer outlet — 1.7%-1.9%

In actual plant operation with 28-28-0, a substantial improvement in the performance of the dryer was observed immediately following improvements in the operation of the granulator to lower the moisture level in the material fed to the dryer, and thus a lower dryer outlet moisture content was obtained.

The other parameters that have a bearing on the performance of the dryer are the airflow through the dryer, flight arrangement, and residence time in the dryer. We find the residence time in our dryer is 9 minutes, and we are studying the feasibility of increasing it to 15 minutes to obtain better drying.

The airflow through the dryer is also quite low at present. We are studying the feasibility of increasing the airflow from 59,465 m^3/h (35,000 cfm) to about 102,000 m^3/h (60,000 cfm) to obtain improved drying of the product.

Manufacture of UAP-KCl Formulations

The control of granulation with straight UAP formulations like 28-28-0, though differing in the process control concept compared with fertilizer formulations based on less soluble compounds, is comparatively troublefree if the plant is properly designed and operated, keeping in mind the previously mentioned effect of the water balance and the granulator temperature on the efficiency of granulation. However, the addition of potash (as KCl) in the presence of UAP poses an altogether different control problem. CFL went in for the manufacture of a UAP-KCl 22-22-11 as a part of a product diversification program in late 1969. Even though an acceptable product grade could be made, the operation revealed some peculiar problems with granulation and drying that resulted in unsteady operation and a reduced output from the plant.

It was apparent from the plant trials and laboratory work that the granulation of UAP-KCl was more sensitive

to moisture content and temperature conditions inside the granulator than were straight UAP formulations. Close control of these conditions (temperature and moisture) throughout the process, especially in the granulator and dryer, is essential for acceptable operation.

One condition that appeared to be controlling in both granulation and drying was the "wetness" or "stickiness" of the solid material. The material tends to become sticky, which causes serious operating problems. The stickiness is attributed to the predominance of the liquid phase consisting of water and dissolved salts. Because of the very high solubility of the salts involved in this formulation, especially with increases in temperature, a solid granule that appears dry at one temperature becomes "wet" and sticky at another higher temperature. The appearance of a molten product occurs simply upon heating beyond a particular temperature referred to as the "sticking temperature" as shown in Figure 1. At a given moisture content, the sticking temperature of the urea-based NPK 22-22-11 is much lower than that of the straight DAP-KCl (no urea) NPK 14-35-14.

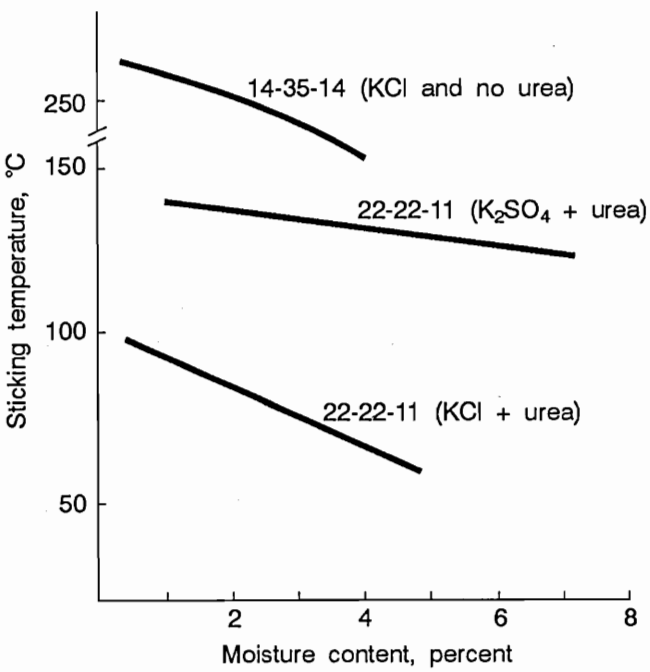

Figure 1. Sticking Temperature Relative to Moisture Content for Selected Products Based on Potassium Chloride (KCl) or Potassium Sulfate (K_2SO_4).

Pipe Reactor Development and Operation

In view of significant advantages of operation with a pipe reactor as reported by TVA, particularly related to the reduction in fuel oil consumption in the dryer, a pipe reactor with a 4-in (100-mm) diameter was designed and installed in 1982 in one train of the CFL NPK plant for experimentation. Whenever the normal production schedule permitted, experimentation with the pipe reactor was undertaken.

When the pipe reactor was operated, a substantial saving in the consumption of fuel oil fed to the dryer furnace was observed. After a few days of operation with the pipe reactor, certain problems such as plugging of the pipe reactor outlet and high ammonia back pressure were encountered. These problems were largely solved by modification of the slurry outlet. The moisture content in the melt discharged from the pipe reactor was less and the temperature was higher than that of conventional operation. These two factors reduced the load on the dryer, and the fuel oil input to the dryer furnace could be reduced substantially.

Trials with the pipe reactor could be undertaken only a few times when the normal production schedule permitted. The rate of production with the 4-in (100-mm) unit was limited to 350 tpd, whereas normal production using the conventional tank-type reactor system was about 600-650 tpd for each train.

A pipe reactor with a 6-in (150-mm) diameter was fabricated from type 316L stainless steel and installed in 1983. The larger pipe reactor incorporated a few design modifications including a change in the length of reaction tube and the slope. This pipe reactor was designed for a heat flux of about 0.5 million Btu/h/in^2 (19.5 x 10^3 kcal/h/cm^2) and an ammonia loading of 0.93 lb/h/in^3 (0.026 kg/h/cm^3).

Even with the larger pipe, problems were faced when the production rate exceeded 400 tpd. The main problem was improper granulation. The bed in the granulator became more "wet" as a result of higher temperature and higher moisture content. Perhaps condensation of evolved steam in the granulator was making the bed too wet to permit proper granulation. The distribution of slurry was modified to permit improved disengagement of steam from the slurry; the results were, however, not satisfactory. Subsequently, the slurry distributor was changed to a slotted-type design, but no good effect was noticed. An air blower was installed to help sweep the water vapor from the granulator. This unit was installed in February 1984,

and it helped to increase the production rate from the previous 400 tpd value to 425 tpd per train.

The limitations of a pipe-reactor system in making UAP and UAP-KCl grades are not completely understood. It has to be ascertained whether the presence of polyphosphates in the melt adversely affect the granulation, thus setting a limitation upon the production rate. Also to be ascertained is the optimum moisture-temperature relationship for UAP products while operating the pipe reactor. A comparison of the operating data obtained with the two systems is shown in Table 2.

Table 2. Conventional Preneutralizer Versus Pipe Reactor in Production of UAP

Parameters	Operation With Conventional Preneutralizer	Operation With Pipe Reactor
Temperature of slurry entering the granulator, °C	116-120	140
Moisture in slurry entering the granulator, %	16-18	5
Temperature of bed in the granulator, °C	75-79	85-90
Temperature of dryer inlet air, °C	200-220	110
Consumption of fuel oil in the dryer furnace, kg/t of product	10	5
Crushing strength of product granules, kg/granule	0.8-1.0	1.2-1.3

Production of Complex Fertilizers – An Operating Experience in India

T. J. Joseph and T. A. Sankaran[1]

Abstract

A fertilizer granulation plant consisting of two trains of equipment, each with a capacity of about 800 tpd based on the Tennessee Valley Authority (TVA) rotary granulator process, was built and operated by Fertilisers and Chemicals Travancore Limited (FACT). The plant is located at Cochin, India. Although original plans included production of high-urea grades such as 17-17-17 and 28-28-0, extreme difficulties were encountered with these grades due largely to their high hygroscopicity and the lack of dehumidification in the very humid production and storage areas. After 5 years of unsuccessful operation (1979-83), the high-urea grades were abandoned and production was limited to diammonium phosphate (18-46-0) and ammonium sulfate-based 20-20-0. Since the changeover, production has been highly successful and the economics of the plant have been greatly improved.

T. A. Sankaran

Introduction

The Fertilisers and Chemicals Travancore Limited organization, popularly known as FACT, located in Kerala State in South India, pioneered the Indian fertilizer industry by setting up the first nitrogenous fertilizer factory in the country in 1944. From a single-product fertilizer plant of the forties, FACT has through the years grown into a large multiproduct, multidivisional corporation in the public sector. Production capacities of the corporation today are as follows:

Products	Annual Capacity (tonnes)
Ammonia	310,200
Sulfuric acid	580,800
Phosphoric acid	148,000
Ammonium sulfate	198,000
Ammonium chloride	24,750
Single superphosphate	49,500
Urea	330,000
Factomfos 20-20-0 and DAP 18-46-0	633,500
NPK mixtures	70,000

In addition to the above products, a 50,000-tpy caprolactam and 225,000-tpy ammonium sulfate plant is scheduled for commissioning in late 1990.

The parent manufacturing unit of FACT is located at Udyogamandal, known as Udyogamandal Division. The Cochin Division, situated at Ambalamedu, is the second manufacturing division of FACT. Phase I of the division went into commercial production in 1973 and has facilities to produce 198,000 tpy ammonia and 333,000 tpy urea. Phase II, which was commissioned in 1976, has facilities to produce 330,000 tpy sulfuric acid, 115,000 tpy phosphoric acid (P_2O_5), and 485,000 tpy complex (NP and NPK) fertilizers.

The complex fertilizer plant was designed to produce various grades of NPK fertilizers such as 17-17-17, 28-28-0, 14-28-14, 18-46-0, 24-12-12, 11-22-22, and 0-46-0 in two trains, each having a capacity of 40 to 46 tph depending on the grade produced. The total installed capacity was 485,000 tpy. The plant, designed by Wellman Lord/Davy Power Gas Inc., U.S.A., employs the well-known TVA granulation process. The detailed

1. Deputy General Manager (Technical), The Fertilisers and Chemicals Travancore Limited (FACT) – India and Plant Manager (NPK), FACT Cochin Division – India, respectively.

engineering was done by FACT Engineering and Design Organization (FEDO), a division of FACT.

Use of the plant for production of urea-based grades, on which FACT had high hopes, could not be accomplished over a period of a few years. Several debottlenecking programs were implemented but did not yield useful results. In spite of concerted efforts for production of urea-based 17-17-17, the output realized was low and the quality of product was far from meeting acceptable standards. The market trends at the same time favored lower nutrient combinations like 16-20-0 and 20-20-0 that were already being produced in the parent plant of FACT situated at Udyogamandal. The changeover of the product pattern at Cochin to ammonium sulfate-based 20-20-0 was a tremendous success particularly in view of the severe humidity conditions at the location of the plant.

This paper highlights the experience of FACT in producing urea-based NPKs at their Cochin Division plant and the events leading to the eventual switchover to ammonium sulfate-based 20-20-0.

Complex Fertilizer Plant of FACT-Cochin Division

The Cochin plant (Figure 1), constructed as a urea-based NPK plant, consisted of a TVA-type rotary granulator with a mechanical scraping arrangement, two-stage neutralization using 37% P_2O_5 phosphoric acid and vapor ammonia, and a separate system (barometric condenser) for scrubbing of vapors emitted from the first-stage neutralizer to control the water balance in the entire system. The recycle system consisted of a rotary dryer, Rhewum-type screens, a dragflight-type recycle conveyor, bucket elevators, an internal-type venturi and cyclonic gas scrubbing system, and a product-coating system. Thirty-seven percent P_2O_5 phosphoric acid was adopted in the design along with the use of vapor ammonia for the ammoniation reaction. This was done to reduce the evaporation load in the concentration section of the phosphoric acid plant. In practice, this system failed and a higher P_2O_5 concentration became necessary.

Performance of the Plant

Operation of the plant during the initial years resulted in heavy downtime of equipment and severe underutilization of the plant's capacity. The following is a listing of the

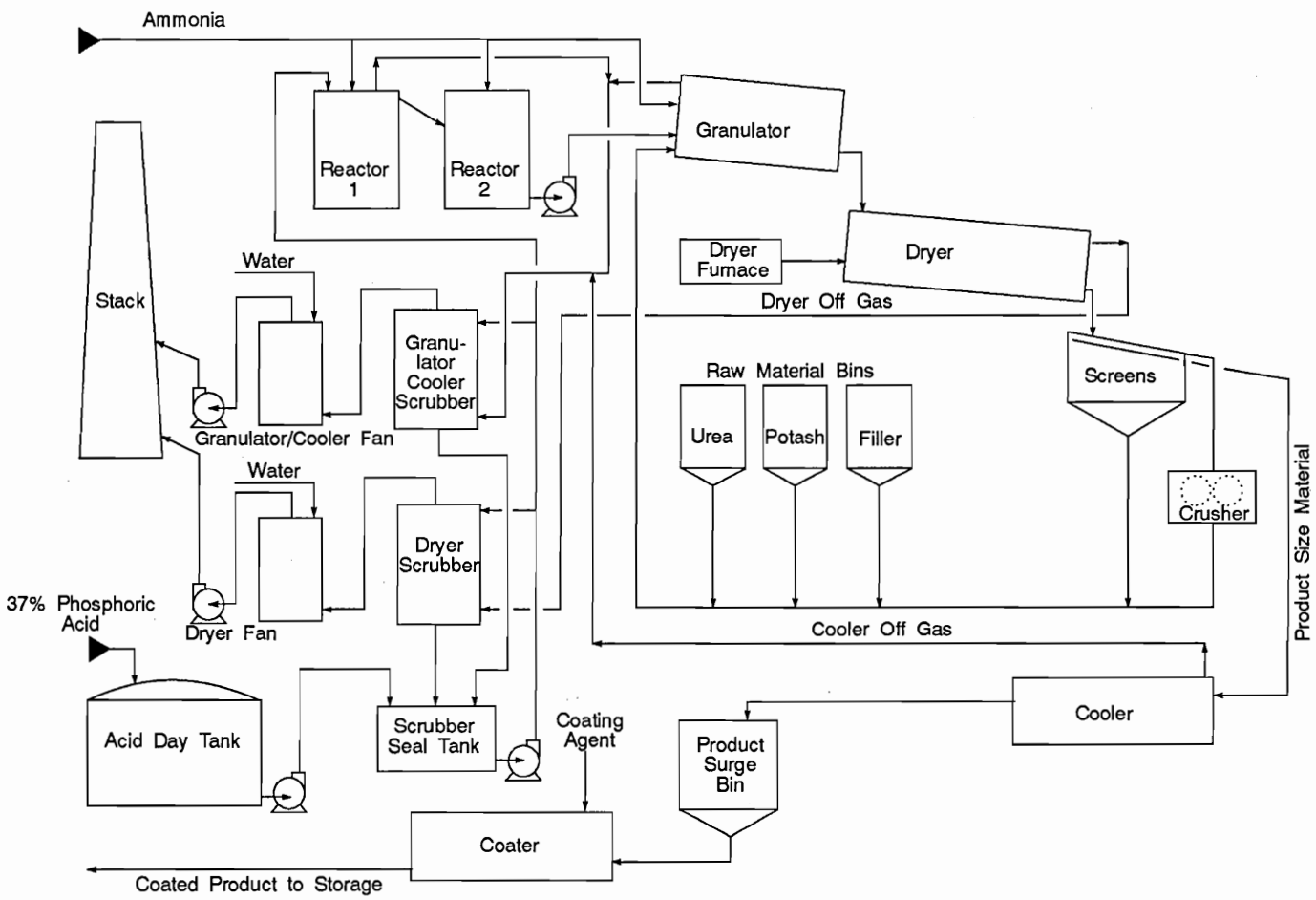

Figure 1. Flow Diagram of FACT (Cochin) NPK Plant as Originally Constructed.

problems encountered in stabilizing production and actions taken for debottlenecking.

Poor Plant Layout–The layout of the plant was too congested for easy maintenance and thus contributed to increased downtime of the plant. The poor layout, in spite of no dearth of space, was a major bottleneck beyond rectification.

Reactors–The following problems were encountered:

1. Failure of reactor brick lining–Reactors were originally constructed of rubber-lined mild steel with brick lining. Failure of the acid-proof brick lining in the reactor caused frequent stoppages of the plant to clear the brick pieces that choked the slurry lines and nozzles. Due to damage to the reactor internals, the slurry pumps were also frequently plugged with debris.

2. Slurry overflow–There were two reactors for reacting acid with ammonia. Frequent overflow of slurry from the No. 1 reactor due to mole ratio upsets (thickening) that prevented the flow of slurry to the No. 2 reactor (through a launder) caused loss of slurry and required elaborate cleaning. The overflow was also aggravated by heavy foaming in the reactor.

   A single-stage stainless reactor without acid-proof lining was eventually provided in place of the two-stage reactor system. This helped to overcome the launder overflow problem and eliminated completely the choking of slurry lines and nozzles. The barometric condenser originally used for the condensation of first-stage reactor vapor was removed because it was inefficient and created a pollution problem.

3. Foaming–Foaming in the reactors and scrubber-seal tank resulted in false level and pumping rate indications. The foaming problem experienced was mainly due to the presence of urea in the system. A few defoamers were tried but not with success.

Poor Granulation–While making the 17-17-17 grade, granulation was found to be very poor due to unsteady slurry feed, low temperature of the slurry, and the addition of coarse potash and sand. This resulted in too much fine material in the system which ultimately found its way into the final product.

Scrubber Liquor Mole Ratio–Due to unsteady operating conditions, the mole ratio would rise and result in the formation of solid phosphates. Scrubber distribution nozzles and airflow channels inside the scrubbers plugged very often, affecting the scrubber efficiency. Long downtimes were required for cleaning the scrubber internals.

Acid Strength–The 37% P_2O_5 phosphoric acid system posed granulation problems for the production of 17-17-17 and 18-46-0 due to the low temperature (high moisture) of the slurry.

Granulator–The following problems were encountered:

1. Scraper–At least twice a day, the plant had to be stopped for cleaning of heavy accumulations of hard solids and lumps from the mechanical scraper, supports, and interior of the granulator shell. The mechanical scraper was removed, and the shell was fitted with rubber panels. This was found to be effective, and frequency of cleaning was decreased.

2. Ammonia sparger–The original ammonia sparger located below the bed of material in the granulator, though providing uniform distribution, did not work well because the buildup of material on the supports and on the shell caused the supports to fail. Hence, the submerged sparger was replaced with dip pipes which offered less resistance to material movement inside the granulator.

Choking of Chutes and Cyclones–Choking of various chutes due to the congested plant layout, inadequate sizing, and mixing of moist fumes with dust-laden air caused a major problem. Vent ducts provided for the recycle equipment were frequently getting choked as some portions of these ducts were running horizontally.

Screens–The double-decked Rhewum-type electromagnetic vibrating screens posed severe limitations due to blinding. The screens were modified by increasing the space between the two decks to have better accessibility for manual cleaning. The electromagnetic vibrators were replaced with a motor vibration arrangement. Subsequently, these units were replaced with single-deck screens, and this arrangement is giving good performance.

Burners–The lower temperature required by the urea-based grades could not be maintained because of the poor turn-down range of the dryer burner system; consequently, fusing of material in the dryer occurred frequently. This resulted in long shutdowns and the need for strenuous manual labor for cleaning the dryer and other downstream chutes and equipment.

Unsteady Urea Feed Rate–The formation of lumps in the urea bins prevented the free flow of urea through the weigh feeders; the resulting erratic feed rates adversely affected the product analysis.

Spillage Recovery–Due to the very hygroscopic nature of the urea grades, any spillage of material or the escape

of dust caused the floor, stairs, and work platforms to become wet and slippery causing a safety hazard for the working personnel in the plant.

Product Changeover

In April 1979, FACT engaged the services of a well-known external consultant for debottlenecking the NPK plant. A number of modifications were tried. The first attempt was to produce 17-17-17 and 28-28-0. Continuous production levels could not be achieved even over a period of 6 months. Again in February, 1983, trials were made to produce 17-17-17 grade. The net result of the debottlenecking project was the conclusion that the conditions and environment at the plant location were not conducive to the commercial production of urea-based 17-17-17.

The Cochin area receives both southwest and northeast monsoons. From early May to late November, this area receives rainfall. The average rainfall is 3,000 mm/year. During the rainy seasons (almost half of the year), the relative humidity is normally over 90%. The severe humidity conditions in the Cochin area and the very hygroscopic nature of the 17-17-17 and 28-28-0 grades prevented continuous operation of the plant, and this resulted in low on-stream efficiency and low product quality. Due to the difficulties in achieving reasonable levels of stabilized production of urea-based 17-17-17 and 28-28-0, and also due to the good market demand for 20-20-0 and 18-46-0, the product pattern was changed over to these less-hygroscopic grades in 1983. Based on the experience gained during the trial runs connected with the debottlenecking project, the 18-46-0 grade could be produced successfully. From 1984 onwards, the reliability of the plant was improved significantly, and this resulted in higher plant utilization. Figure 2 shows the existing arrangement of the plant. Annual production data for the past 12 years are given in Table 1. Today, the plant is operating with success, producing as much as 47,775 tonnes (two trains) in July 1990. Due to the successful operation of the plant, the financial condition of the corporation as a whole has been turned around.

Process and Product Quality Control

Analysis of products at regular intervals is essential for controlling the manufacture of any product. Originally, estimations of nitrogen, phosphate, and potash were carried

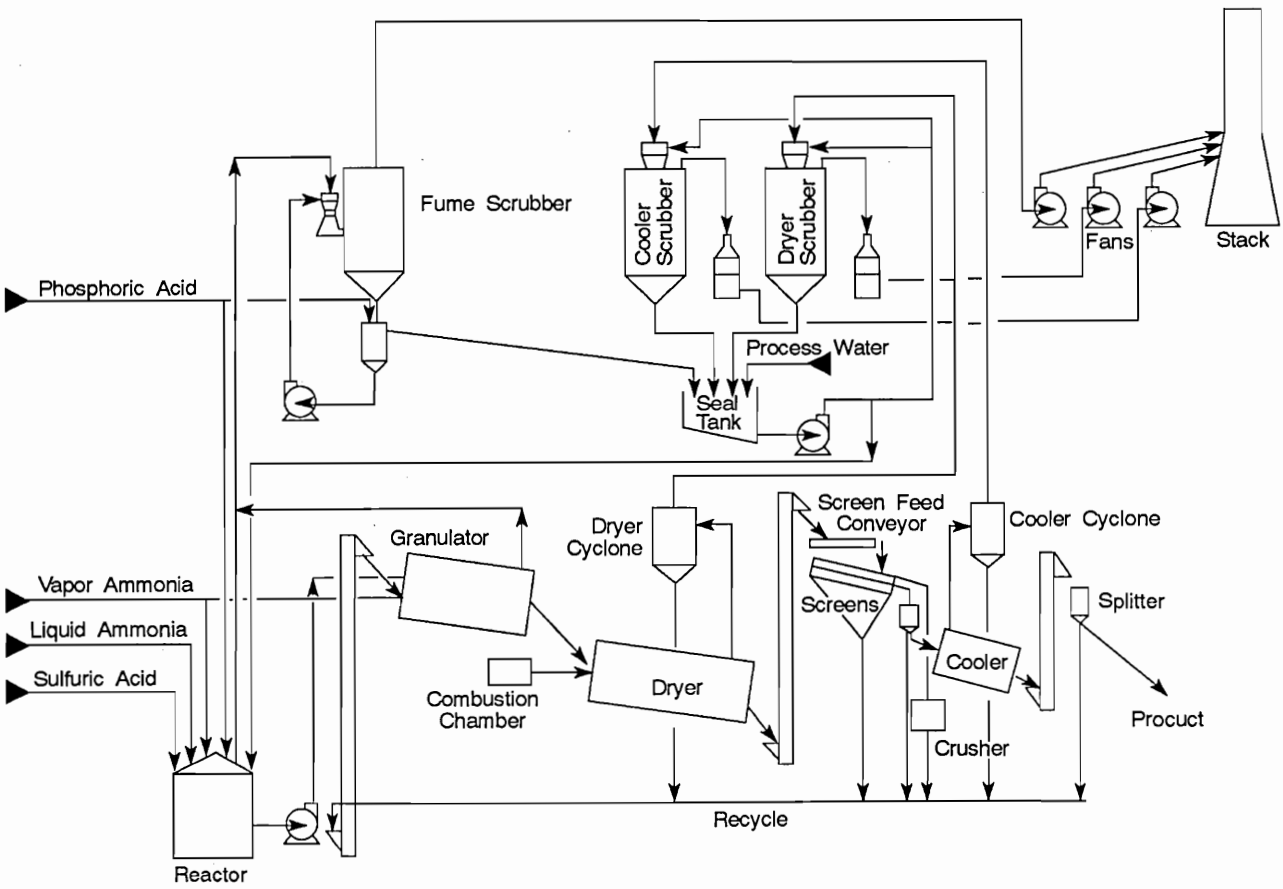

Figure 2. Flow Diagram of Existing FACT (Cochin) DAP/20-20-0 Plant.

Table 1. Annual Production of NP and NPK Fertilizers at FACT, Cochin Division (Total for Two Production Trains)

Before Product Changeover					After Product Changeover						
1978/79	1979/80	1980/81	1981/82	1982/83	1983/84	1984/85	1985/86	1986/87	1987/88	1988/89	1989/90
(tpy product)					(tpy product)						
103,690	99,406	198,414	151,869	179,233	214,700	333,262	323,979[a]	402,700	424,366	476,005	363,065[b]

a. Production was affected by the decommissioning of the imported ammonia storage installation for inspection.

b. The production during the year was affected by the scarcity of imported raw materials, particularly ammonia and phosphoric acid.

out using conventional laboratory manual methods. Since these methods are very elaborate, time consuming, and tedious, the data from the analysis were available too late and were not of much use in process control. Nitrogen was estimated as total nitrogen by the Kjeldahl digestion method. This required a minimum of 2 h. Total P_2O_5 was estimated volumetrically after precipitating as phosphomolybdate; this took about 1½ h. Potash estimation by the perchloric acid method required much more time. Therefore, appropriate process instrumentation for more rapid analysis was found essential. An autoanalyzer capable of hourly analysis of nitrogen (ammoniacal nitrogen and urea nitrogen), total phosphate, and potash was installed in 1979. One key feature of this instrument is its capability to separately determine ammoniacal nitrogen and urea nitrogen, which was not possible in conventional methods. With the switchover of the product pattern to 20-20-0 and 18-46-0, the potash channel of the analyzer was idle. As the production of 20-20-0 stabilized, the need to estimate the sulfate content in the product was increasingly felt. The unutilized potash channel therefore was modified, making it suitable to measure the colorimetric response to low-level barium sulfate turbidity, for the estimation of the sulfate content.

Environmental Control

The pollution control facilities were made adequate to meet the environmental regulations. A plant for treating the effluents was set up after elaborate studies. The aqueous effluent containing ammoniacal nitrogen, fluorides, and phosphates as pollutants is collected in an equalization tank and treated with requisite quantities of lime in a flash mixer attached to a clariflocculator, in which the fluorides and phosphates are converted into insoluble calcium salts. The sludge containing these salts is withdrawn from the clariflocculator and filtered to remove the solids. The partially treated effluents leaving the clariflocculator are stripped to remove ammonia and then neutralized before being released.

The original scrubber design called for combined scrubbing of the fumes evolved from the reactor and dust evolved from various equipment. An internal venturi/cyclonic-type scrubber was used. This system was not efficient because the mixing of dust and fumes resulted in plugging; this led to inefficient removal of fumes from the reactor. This scrubbing system was extensively modified. A new fume scrubber consisting of an external venturi/cyclonic-type unit now provides a clean environment in the plant. Fumes from the reactor and the granulator are scrubbed with 20%-25% phosphoric acid. The design of the venturi (located outside the cyclonic separator) provides easy accessibility for maintenance and for varying the throat opening in conformity with the plant load conditions. The NH_3:H_3PO_4 mole ratio of the liquor circulated through the scrubber is maintained at optimum conditions. A bleed stream from the primary circulation loop is routed to the reactor.

Factors to be Considered in the Selection of Grades and in Designing Complex Fertilizer Plants

The experience of FACT provides the following vital information for the selection of grades and for designing complex fertilizer plants.

1. The 17-17-17 grade and similar urea-based grades are difficult to handle under high-humidity conditions due to their low critical relative humidity. On the other hand, ammonium sulfate-based grades that are less hygroscopic are well suited for such humid locations.

2. The addition of potash, especially to urea-based grades, caused major problems due to an increase in the hygroscopic properties of the NPK product (lowering of critical humidity). Therefore, grades containing potash are not desirable for production in locations where the relative humidity is high.

3. When deciding the layout for complex fertilizer plants, adequate floor space and head room to handle spillages and for maintenance of equipment should be ensured. Smooth gradients with the least number of bends for chutes and ducts are essential. Care should also be given to provide adequate space and provisions for cleanout and inspection openings to facilitate cleaning and maintenance of various equipment such as scrubbers, cyclones, feed chutes, and screens.

4. The accepted practices for choosing reliable and proven equipment should be insisted upon.

5. Analysis of products at regular intervals is essential in controlling the production of complex fertilizers. In this context, it is necessary to provide automatic analyzers for all the essential elements in the products.

6. The recycle system should have adequate excess capacity to handle fluctuations in production.

7. Separate scrubbing systems for fume and dust should be provided.

8. Protection against phosphoric acid spills soaking into the ground must be ensured to avoid any reaction of acid with the soil and consequent problems with ground swelling and foundation failures.

9. Good design and construction practices offering the least possibility for entry of moisture into the plant area as well as good exhaust systems are essential.

10. The recovery system for spillages should be fast and efficient.

Expansion of Plant Capacity

FACT is now considering expansion of the NPK plant capacity by incorporating a pipe reactor. The major thrust is on decreasing the recycle ratio while aiming at energy conservation and increased production. With the installation of the pipe reactor, the plant capacity is estimated to go up to 400,000 tpy of 20-20-0 and 184,000 tpy of DAP (584,000 tpy total for two trains), against the present total capacity (two trains) of 485,000 tpy.

Conclusion

The experience of FACT in its operation of complex fertilizer plants, shows that it is advantageous to adopt ammonium sulfate-based formulations in plants located in areas of high humidity. If urea-based NPK formulations are to be chosen, an elaborate dehumidification system has to be provided for the production, bagging, and storage areas to maintain quality of products and continuity of production.

Bibliography

1. Ramasubbu, P. K., and N. Natarajan. 1988. "Optimizing Formulations of Complex Fertilizer Grades," Proceedings of NPK Workshop, Madras.

2. Ramasubbu, P. K., and N. Natarajan. 1986. "Improving Performance of Complex Fertilizer Plants," *Fertilizer News*, Vol. 31, No. 12 (59-65).

3. Kulandai Raj., D. 1979. "Performance of NPK Plant at FACT, Cochin," FAI Seminar Proceedings.

4. Schultz, J. J. 1989. "Production of Granular NPKs in Ammonium Phosphate Plants – Some Important Differences," Technical Bulletin T-36, International Fertilizer Development Center, Muscle Shoals, Alabama.

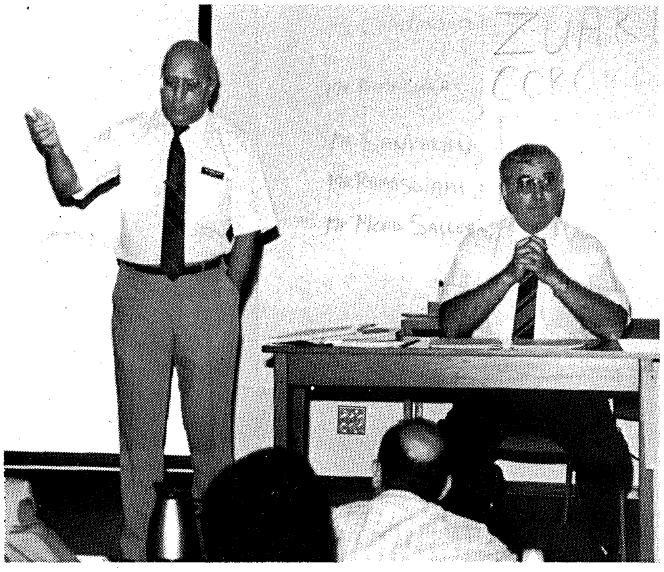

Improving Productivity in NPK Granulation Plants – NAFCON (Nigeria) Experience

T. R. Ramaswami[1]

Abstract

The National Fertilizer Company of Nigeria Limited (NAFCON) complex, the first of its kind in Nigeria, consists of a single-train ammonia and urea plant and an NPK granulation plant. The production of various NPK grades is geared toward local consumption. A continuous effort is being made to improve the productivity of the NPK granulation unit. NAFCON's first 2 years of operational experiences are discussed. The various plant modifications carried out during this period to improve productivity are also discussed including the addition of granular urea to the process after the granulation, drying, and cooling steps. The performance of major equipment items used in the granulation unit is discussed. This paper also explains the basic requirements needed to improve on-stream efficiency giving specific reference to good maintenance practices, adequate inventory of spare parts, and availability of raw materials.

Introduction

The National Fertilizer Company of Nigeria Limited (NAFCON) is the first and only nitrogenous fertilizer complex in Nigeria, manufacturing 1,000 tpd of ammonia, 1,500 tpd of urea, and 1,000 tpd of different grades of NPK. This complex is located at Onne, near Port Harcourt in Rivers State. NAFCON is a joint venture between the Federal Government of Nigeria and the M.W. Kellogg Company of Houston, Texas (U.S.A.).

With the growing population, particularly in Third World countries, the demand for fertilizer is expected to steadily increase to meet the increased demand for food production. Although the phosphatic fertilizer industry's growth is not as significant as that of the nitrogenous fertilizer industry, complex NPK granular fertilizers, by their own merit, are popular and preferred by farmers where balanced plant nutrient application is required. Modern single-train NPK plants, such as the NAFCON plant, are rated to produce about 1,000 tpd product.

1. NPK Plant Superintendent, National Fertilizer Company of Nigeria Limited (NAFCON) – Nigeria.

NAFCON Experience in Improving NPK Plant Productivity

NAFCON NPK Plant – Salient Features

The NPK plant is a single-train conventional slurry granulation plant suitable for manufacturing DAP and several NPK grades. The preneutralizer (reactor) is an unlined Type 317L stainless steel vessel 12 ft in diameter and 20 ft tall. The granulator drum is 11 ft in diameter and 22 ft long. Its interior is fitted with loose rubber paneling.

The dryer is a cocurrent unit, 12 ft in diameter x 90 ft long, and is driven by a two-speed motor. It is heated with natural gas fuel. Single-deck screens are provided which are quite efficient. The fines (recycle) conveyor in the plant is a 72-inch wide, inclined belt conveyor. Bucket elevators used in the plant are equipped with the well-known Jeffry chain. A fluidized bed cooler is used for cooling the product. The cooling medium used in this cooler is conditioned (chilled) air. Ammonia is used as the refrigerant for cooling the air, and the ammonia vapor generated is used in the NPK process. Two venturi-type cyclonic scrubbers are used – one for dust and fumes and the other for the dryer offgases. Variable-speed product screen feeders are used to regulate and control the product offtake and the recycle load. This system helps in

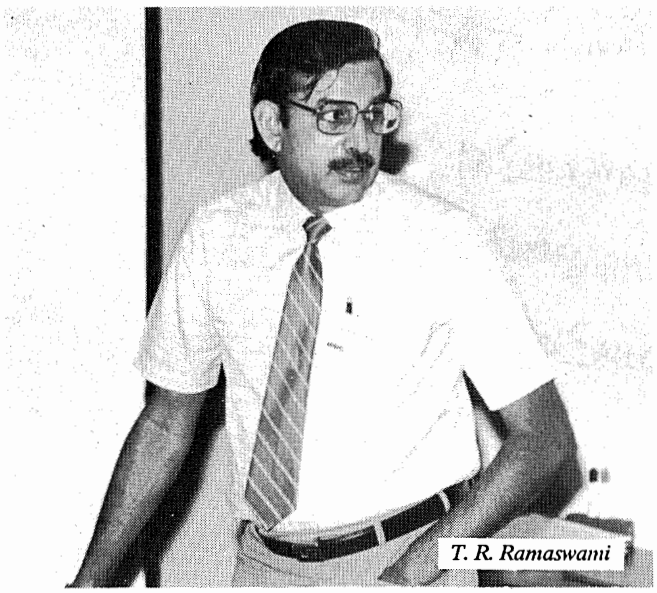
T. R. Ramaswami

maintaining the liquid-to-solid-phase ratio in the granulator. Product coating is done in the coating/mixer (a ribbon mixing screw) using oil and kaolin clay.

Plant Performance – First Year of Operation

The NAFCON NPK plant was commissioned in February 1988. A small team of experienced expatriate personnel joined very enthusiastic, classroom-trained Nigerian operators in the startup operation. The performance guarantee/plant acceptance test runs were successfully completed in May 1988. However, sustained continuous operation of the plant was not achieved during the first year of operation for a variety of reasons. The plant lost-time summary for the first year of operation is given in Table 1. Chief causes of downtime were unscheduled maintenance, scheduled maintenance/modification, and raw material shortages.

Table 1. NAFCON NPK Plant Lost-Time Summary – First Year of Operation (1988)

Reason	Frequency of Occurrence	Total Hours
1. Unscheduled maintenance	61	1,302
2. Scheduled maintenance/ modification	10	646
3. Unscheduled operational cleaning	79	180
4. Raw material shortage	5	846
5. Inventory control	1	381
6. Others	14	368
TOTAL	170	3,723

NAFCON Plant Performance – Second Year of Operation

Systematic Debottlenecking Program – Concerted efforts were taken in the second year of operation to improve NPK plant on-stream time. A plant downtime analysis was prepared and reviewed by a task force comprising personnel from operations, maintenance, and technical services. The causes for plant shutdowns were identified, and the reasons for the lost production were quantified. Recommendations were made and systematically implemented to resolve problems encountered in each and every piece of equipment. A routine weekly scheduled plant shutdown program was established to carry out maintenance and operational cleaning jobs. Critical and often-used spares were stocked.

Removal of Urea From Granulation Loop – The process problems in making NPK 15-15-15 using a large amount of urea and sand filler were studied in detail. After carefully considering several alternatives such as using ammonium sulfate and sulfuric acid, NAFCON decided to stop adding urea to the granulation loop and instead to start adding it (granular urea) separately in the coating mixer. A weight ratio controller was installed in the instrument loop to vary the quantity of granular urea fed to match that of the product fed to the product cooler/coating mixer. With this arrangement, 7-19-19 is made in the granulation loop and blended with urea as needed in the coating mixer to obtain a final product analysis of 15-15-15, NAFCON's premier NPK grade. This major process change practically eliminated most of the process problems like scaling and buildup in the dryer, pulverizers, chutes, and other equipment. The on-stream efficiency was thus improved significantly.

Training – The training of the local operating personnel progressed steadily and this also helped in stabilizing plant operations and improving plant performance.

As a result of the above programs and process modifications, the plant lost-time record for the second year of operation improved (Table 2). As can be seen, the total lost time decreased considerably in the second year. A significant reduction could also be seen in the total hours lost due to both scheduled and unscheduled maintenance activities. The plant on-stream hours and the productivity improved steadily. In March 1990, the plant achieved an all-time record production of 2,040 tpd, which

Table 2. NAFCON NPK Plant Lost-Time Summary – Second Year of Operation (1989)

Reason	Frequency of Occurrence	Total Hours
1. Unscheduled maintenance	46	235
2. Scheduled maintenance	23	383
3. Scheduled operational cleaning	20	66
4. Unscheduled operational cleaning	17	14
5. Raw material shortage	13	724
6. Inventory control	3	494
7. Others	8	84
TOTAL	130	2,000

is more than twice the plant-rated capacity. By pursuing a policy of a dedicated and determined approach to identifying and eliminating constraints, on-stream time was improved (excluding inventory control and raw material supply problems) from 72% to 91%, making this plant one of the world's high-performance NPK fertilizer units.

Factors That Improve Productivity in NPK Plants

Obviously, the key to improved productivity in NPK plants is the on-stream factor. The more the plant is kept on stream, the greater the productivity. The NPK fertilizer manufacturing process involves handling wet, sticky, hygroscopic solids often containing either fines or lumps. Also, it is necessary to handle hot slurries with a high percentage of solids, and these can solidify if not maintained at the proper temperature. It is difficult, therefore, to avoid pluggages and thus keep the plant continuously running. There are several factors that contribute to minimizing the plant downtime and maximizing the plant on-stream hours and, therefore, the productivity. These factors could be broadly classified into (1) operational factors and (2) design factors. A discussion of these two major areas follows.

Operational Factors

The management philosophy, mode of operation, and maintenance practices influence the various factors that fall under the category of operational factors, including the following:

1. Availability of raw materials.
2. Training of manpower.
3. Availability of spare parts.
4. Scheduled shutdowns for maintenance and operational cleaning.

Availability of Raw Materials – Many NPK units have plant stoppages at one time or another for periods ranging from a couple of weeks to several months due to the non-availability of raw materials. Many NPK plants import phosphoric acid and potash, and, quite often, delayed shipments of these materials cause raw material outages. Adequate storage capacity for these raw materials is very necessary. Shipping schedules have to be carefully prepared and closely monitored.

Training of Manpower – NPK granulation is regarded as a special skill that is acquired only by actual operating experience. Basically, it is more dependent on the operator's feel, common sense, and foresight than on sophisticated control instrumentation. Good operational techniques and control are essential for successful NPK plant operation. It is necessary, therefore, to have well-trained personnel in NPK plants to optimize the on-stream efficiency and productivity.

Availability of Spare Parts – Because the NPK plant is basically a solids-handling plant that processes corrosive, hygroscopic, and abrasive materials, the wear on equipment is high. Therefore, it is necessary to stock adequate spare parts to ensure sustained production. The following are some of the typical components that wear out and need routine replacements:

1. Screen meshes (screen cloth).
2. Screen vibrator motors and components.
3. Slurry pump components.
4. Bucket elevator head and tail sprockets.
5. Bucket elevator chain.
6. Conveyor belts.
7. Conveyor idlers and head and tail drums (pulleys).
8. Drag conveyor chains and flights.
9. Pulverizer chain flails and other internals.
10. Various bearings.
11. Granulator/dryer trunnions and thrust rollers.
12. Granulator rubber panels (liners).
13. Chutes, ducts, and hopper discharge assemblies.
14. Cyclone chains (for internal continuous cleaning).
15. Instrument spares including control valves.
16. Electrical spares, including relays, high voltage fuses, small horsepower motors, electronic circuit cards, and related components.

Scheduled Shutdowns for Maintenance and Operational Cleaning – NPK plants are highly maintenance oriented. NPK plants, by nature of the process, cannot be run continuously for days, weeks, or months. The process involves using sticky, hygroscopic, corrosive, and abrasive materials, and thus plant shutdowns caused by plugged chutes, plugged slurry nozzles, or breakdown of equipment due to the failure of bearings, couplings, and chain links are very common. An average on-stream time of 20-22 hpd is considered to be good. Experience has shown that a planned periodic shutdown of an NPK plant, say once a week, to do scheduled maintenance and operational cleaning definitely improves overall daily on-stream time. Both the quality and quantity of jobs carried out during such shutdowns are improved because the jobs can be preplanned. At NAFCON, we schedule one shutdown each week to carry out routine operational cleaning of equipment and chutes as well as preplanned maintenance jobs. This has greatly helped in minimizing unexpected plant downtime while maximizing on-stream time and productivity. Plant shutdowns for a longer duration are also scheduled periodically as required to carry out non-routine jobs, such as elevator sprocket changes, conveyor belt changes, or bucket elevator chain replacement.

Design Factors

Process and plant design considerations are equally important and significant for improving plant on-stream efficiency and productivity. The various factors included in this category are as follows:

1. Proven process design.
2. Plant layout and general arrangement.
3. Process control instrumentation.
4. Reliability of equipment.

Proven Process Design – Various methods of producing granulated compound fertilizer have been described in the literature based on pilot-plant as well as actual plant data. Water granulation, steam granulation, steam/water granulation, slurry granulation, and melt granulation all have been tried in NPK plants. Even fluidized bed granulation has been attempted. The conventional slurry technology with a preneutralizer is by far the most successful method of granulation and is widely used in NPK granulation plants throughout the world. Pipe reactors with and without a preneutralizer have also been commercially used in some plants. Several innovative improvements have been made over the years incorporating improved process controls, functional design, and more dependable equipment. A number of reputable engineering companies offer NPK granulation technology and commercial plants. To achieve maximum productivity, it is necessary and advantageous to select a commercially proven plant design most suitable for the NPK grades that are proposed and the raw materials that are available.

Plant Layout and General Arrangement – NPK granulation plants are maintenance intensive; therefore, the equipment layout has particular significance in these plants. Equipment must be well laid out giving adequate space and access for maintenance and operational cleaning. Consideration should also be given while laying out equipment to provide the most direct route for slurry lines as well as for ducts and chutes handling all NPK materials; bends and horizontal sections should be minimized. Lifting devices, including monorails, need to be provided at appropriate locations to facilitate the removal of heavy equipment items, such as trunnions, elevator-head sprockets, gear boxes, and motors, for repair or replacement. Platforms should be provided as needed for inspection, cleaning, and maintenance of equipment. NPK plant buildings consist of several floors. Stairways should be provided at either end of the building to provide easy access to every floor. Concrete buildings, although more expensive, are preferred over steel structures because maintenance required is practically nil. Due consideration of the above, when deciding plant layout and general arrangement, is essential to minimize plant downtime.

Process Control Instrumentation – Modern chemical plants have more or less total automatic process control instrumentation. However, in NPK plants, because of the nature of the process where operator's feel and foresight are critical for plant operation, total automation is difficult, if not impossible, to achieve. NPK plant instrumentation has undergone several improvements over the years. To enable operating personnel to take timely corrective action to avoid/minimize plant downtime, the following instrumentation controls are quite necessary:

1. Equipment trip-indicating alarm to indicate first equipment item to trip in a closed loop (interlocked) system.
2. Flow, level, temperature, and current indicating/recording controllers including cascade systems.
3. Pressure differential indicators across individual scrubbers, cyclones, fluidized bed cooler, and other air handling equipment.
4. Pressure-indicating controllers, especially on the ammonia vaporizer.
5. Weight-indicating controllers for solid material conveying systems.
6. Damper/diverter pneumatic control systems.
7. Various alarm/annunciation systems.

Reliability of Equipment – Rugged and reliable equipment is necessary to improve on-stream efficiency and productivity in NPK plants because many plant outages are caused by equipment breakdowns. The need for high material-handling rates, the use of erosive and corrosive materials, and the process cycle, which alternates between wet and dry and hot and cold conditions, are all factors that cause severe erosion/corrosion and stress on all plant equipment.

Therefore, greater than normal care and attention are needed in selecting the type of equipment and materials of construction. Careful scheduling of routine, preventive, and predictive maintenance is also extremely important for maximizing on-stream efficiency.

It is appropriate to discuss the design requirements of some of the critical equipment, the choices available, and their relative merits and preferences based on industry experience. These are important because they also have an effect on the plant's on-stream efficiency and productivity.

1. **Preneutralizer and Slurry Handling Facilities** – Type 316L stainless steel or Type 317L stainless steel is the preferred material of construction for the preneutralizer or reactor. This vessel is usually designed with a 2:1 height-to-diameter

ratio and a normal operating level of 50%. Process upsets will be minimized if the freeboard capacity is high. Slurry lines to the granulator should be by the most direct route with a minimum number of bends.

2. **Granulator** – Loose rubber paneling coupled with the facility to reverse the granulator is used in many plants. Mechanical scrapers are usually a problem. The granulator discharge chute should be a single duct sufficiently large and as short and nearly vertical as possible.

3. **Dryer** – A two-speed motor should be specified for easy change of dryer speed as needed for urea-based NPK grades and for other grades to increase or decrease dryer retention time. The lack of proper rigging/lifting devices for the dryer motor, gear-box, trunnions, and other heavy components will increase maintenance downtime of the plant.

4. **Elevators** – Slow-speed double-strand (chain) bucket elevators are preferred. The wear of bucket elevator chains and sprockets depends on the NPK grade manufactured and the type of raw materials used. Periodic inspection and renewal of head and tail sprockets will improve the chain life and will minimize breakdowns.

5. **Screens and Screen Feeders** – Single-deck screens have tremendous maintenance and performance advantages. A single-deck screen arrangement eliminates the need to have a drag-type conveyor to feed the screens. Such a conveyor usually requires high maintenance. Product screen feeders consisting of variable-speed belt conveyors ensure that only the required amount of product is screened and that maximum screening efficiency is achieved.

6. **Drag Feeders Versus Belt Conveyors** – Drag feeders are high-maintenance equipment. At NAFCON, a 72-inch-wide belt conveyor is used for the fines conveyor, replacing the more commonly used drag feeder for this service. The performance of this belt conveyor is very good and is more reliable than that of the drag feeder.

7. **Raw Material Bins and Weigh Feeders** – In a typical urea-based NPK plant, there are at least three raw material bins equipped with belt-type weigh feeders – one each for urea, potash, and filler. Many new plants have additional bins and feeders as spares. Having at least one additional bin with a belt weigh feeder is very advantageous and will almost certainly increase plant on-stream time. The spare unit can also be used to feed monoammonium phosphate or some other raw material into the system if needed. Wide belts (at least 36-inches) on weigh feeders are preferred over narrow belts to minimize spillage.

8. **Screw Conveyors** – It is better to avoid screw conveyors, especially for hygroscopic NPK materials. Their availability factor is limited. At NAFCON, the dust conveyor that carries cyclone dust to the granulator was initially a screw conveyor. This unit failed frequently and was replaced with a belt conveyor which is now running practically trouble free.

9. **Fluidized Bed Cooler** – Maintenance required is very limited in fluidized bed coolers. However, operational cleaning time is high in fluidized bed coolers because the hygroscopic fertilizer material clogs the air distribution screen mesh. Keeping the distribution screen dry and clean is a problem.

10. **Chute and Ducts** – A 55° valley angle is the standard used in this industry for chutes and hoppers. A 70° angle is required for handling dust. Chutes and ducts should preferably be nearly vertical with a minimum of elbows or bends. It is also necessary to provide clean-out doors at all turns, at each floor level, and preferably about every 10 ft of length for longer chutes. Attention must be paid also to providing access for the clean-out doors at different locations. A lot of cleaning time can be saved with properly

designed chutes, ducts, clean-out doors, and access platforms.

Conclusion

The NPK plant process is not complex, but operation of a solids-handling plant has always been difficult. Selection of a proven design with reliable equipment and a well-planned equipment layout are basic requirements for a high on-stream efficiency. A good preventive and predictive maintenance program together with the availability of adequate spare parts and raw materials are some of the essential factors that contribute to increased on-stream efficiency. Additionally, in each NPK plant, on the basis of operating experience gained, changes and modifications may have to be made to optimize plant on-stream efficiency and productivity.

Bibliography

1. Aranuach-Alam, P. N., et al. 1986. "Process and Materials Problems in NPK Plants in Fertilizer Industry," Tutorial Symposium on Corrosion Control in Fertilizer Industries, CECRI, Karaidudi, India.

2. Arunachalam, P. N., F. R. Keeshan, D. W. Leyson, and W. E. Potts. 1981. "Urea-DAP-NPK Granulation," American Chemical Society, New York, New York.

3. Keshavamurthy, G. S. 1978. "Optimization of Capacity Utilization in NPK Granulation Plants," FAI Seminar, New Delhi, India.

4. Kulp, R. L., E. R. Landgraf, and D. W. Leyshon. 1973. "Production of Urea-DAP Fertilizers by the Dorr-Oliver Slurry Process," American Chemical Society, Chicago, Illinois.

5. Leyshon, D. W., and I. S. Mangat. 1976. "Innovations in Slurry Process Granulation Plants," ISMA, The Hague, Netherlands.

6. Ramaswami, T. R. 1984. "Quality Control of Complex Fertilizer," FAI Seminar, Goa, India.

7. Vasani, J. S., and D. W. Leyshon. 1985. "Manufacture of Urea-DAP-Based NPK Products in Developing Countries," The Fertilizer Industry Round Table, October 1985.

Experience With Urea-Based NPK + MgO Compound Fertilizer Production and Marketing in Malaysia

Mohd. Salleh Bin Darus[1]

Abstract

An NPK fertilizer granulation plant of 30-tph design capacity was built and operated by FPM Sendirian Berhad (FPM) in Malaysia. FPM is a joint venture company formed by the Federal Land Development Authority of Malaysia (FELDA), KPM Niaga Sendirian Berhad (KPM), and Behn Meyer & Company. The basic process parameters for the granulation plant were developed by the International Fertilizer Development Center (IFDC) located in the United States. The design is unique in that the process is based on the use of unacidulated phosphate rock and high proportions of urea in formulations designed to suit local cropping conditions. Commercial operation was begun in 1983 and has continued since with good success. This paper describes the process and the major difficulties that were encountered. Most of the difficulties were sucessfully overcome during the first 3 years of operation as a result of equipment modifications and operator training. Production reached 50,000 tpy in 1983 and is projected to reach about 160,000 tpy by 1993 to account for about 44% of the total compound granular fertilizer produced in Malaysia.

Overview of Agriculture in Malaysia

The Malaysian agriculture sector occupies an important position in the national economy. It accounts for about one-third of Malaysia's export earnings and is the main source of livelihood for about 2 million people (about 12% of the population). To maximize the yields of agriculture crops, vast quantities of fertilizers are required.

The fertilizer industry in Malaysia is of great importance as the traditional pattern of low-yield farming practiced by smallholders gives way to more organized systems like those of the Federal Land Development Authority of Malaysia (FELDA) in which the use of fertilizer is emphasized.

1. General Manager, FPM Sendirian Berhad – Malaysia.

Malaysia has a total land area of about 33 million ha, of which about 11.4 million ha has been identified as suitable for agriculture. Of this 11.4 million ha, about 60% presently is under agricultural land use. The breakdown of major cropping patterns in Malaysia between 1983 and 1993 is given in Table 1. Although the actual fertilizer consumption by the various crop sectors has not been clearly established, it is estimated that the main perennial crops, namely rubber and oil palm, account for more than 60% of the total fertilizer consumed in Malaysia.

Table 1. Malaysia Cropping Patterns – 1983-93

Year	Rubber	Oil Palm	Cocoa	Padi	Others	Total
	(thousand ha)					
1983	1,974	1,330	231	666	325	4,526
1984	1,967	1,349	266	632	327	4,541
1985	1,949	1,465	304	659	328	4,705
1986	1,910	1,599	322	660	328	4,819
1987	1,938	1,690	317	650	324	4,919
1988	1,900	1,712	327	660	326	4,925
1989	1,950	1,732	337	665	328	5,012
1990[a]	2,000	1,752	347	670	330	5,099
1991[a]	2,025	1,818	355	672	335	5,205
1992[a]	2,050	1,868	362	672	337	5,289
1993[a]	2,040	1,883	360	670	340	5,293

a. Estimated.

Malaysia fertilizer supply/import can be classified into four categories, namely, nitrogenous, phosphatic, potassic, and compound fertilizer. The fertilizer requirements in Malaysia were wholly satisfied by the imports until the commercial production of granular urea by the ASEAN Bintulu fertilizer plant in Sarawak, Malaysia began in 1985.

The Formation of FPM Sendirian Berhad

Recognizing the country's need for high-quality granular NPK fertilizers manufactured from raw materials having the lowest nutrient cost, FELDA, KPM, and Behn Meyer & Company agreed in late 1979 to form a joint venture company. This joint venture company, known as FPM Sendirian Berhad (FPM), would produce high-quality granular NPK fertilizers from raw materials, such as urea, phosphate rock, and muriate of potash. FPM's decision to use urea as the basic nitrogen source for its products came about because urea is the cheapest form of solid nitrogen. Furthermore, this decision would support the country's urea plant in Bintulu.

In 1979, FPM commissioned the International Fertilizer Development Center (IFDC), a nonprofit, educational organization located in Alabama, U.S.A., to develop and design an exclusive granulation process incorporating the latest technology and know-how in granulation. The process, adopted by FPM, is unique as it is the first of its kind in the world.

Unique Features of Raw Materials Used by FPM

About 60% of the arable land in Malaysia is planted with oil palm or rubber trees, and both these perennial crops require relatively large amounts of nitrogen, phosphorus, potassium, and magnesium. Application of these nutrients in the form of compound fertilizers helps to reduce the application cost and also helps in achieving uniform availability of nutrients to the plant.

The choice of raw materials for the multinutrient grades is of critical importance from both the processing point of view and the availability to the crop. The compound fertilizers used for these perennial crops contain relatively large amounts of nitrogen (12%-18% depending on the formulation). Urea is used because it is the most abundant and the cheapest source of nitrogen in Malaysia. Besides this, the use of urea also fits nicely into the overall national strategy of Malaysia to become self-sufficient in the production of nitrogen. Because of the perennial growing seasons, acidic soil conditions, and abundant rainfall, the need for using traditional water-soluble phosphate sources is minimized; therefore, in most cases the phosphate component of the multinutrient granular products comes from unacidulated ground phosphate rock, which is less expensive than the conventional water-soluble phosphate materials. The potassium and magnesium required by both crops are provided from water-soluble sources, namely, potassium chloride and kieserite (magnesium sulfate).

Although the compound granular fertilizer containing a large percentage of urea is difficult to produce, the process has the following two distinct features, which are not very common in other processes:

1. Raw materials with different particle sizes can be agglomerated using urea solution as the primary liquid phase to form uniform granules with good physical and chemical characteristics.

2. The combination of these raw materials helps to produce granules of desired size suitable for manual, mechanical, or aerial application while operating with a minimum recycle-to-product ratio.

Project Management

With the help and guidance of IFDC, FPM became its own project manager for the design and construction of the FPM granulation plant. FPM managed all engineering, procurement, and construction activities. Specialized engineering consultants were engaged as needed on a short-term basis to provide the technical drawings and to supervise the specialized equipment installations. Equipment fabrication and plant construction were carried out almost entirely by local engineering and fabrication firms. This approach, in which FPM managed the whole project on its own, has proven to be very cost effective.

Training

FPM, as a new fertilizer production organization, had no essential experience or know-how in the technical and operational aspects of fertilizer production. IFDC played a very important role in the training of all the categories of staff. Some of the FPM engineers were sent to IFDC for training and orientation in several NPK granulation plants in the United States. The training program also included participation of selected FPM staff in most of the pilot-plant trials at IFDC Headquarters. During the construction of the project, IFDC engineers and representatives from the U.S.-based engineering firm that provided much of the detailed engineering also provided practical training. Three months before the scheduled startup of the granulation plant, IFDC consultants conducted a formal training program for the plant operations personnel at the plant site. Theory combined with on-the-job training for the FPM staff provided the basis of the actual operating capabilities.

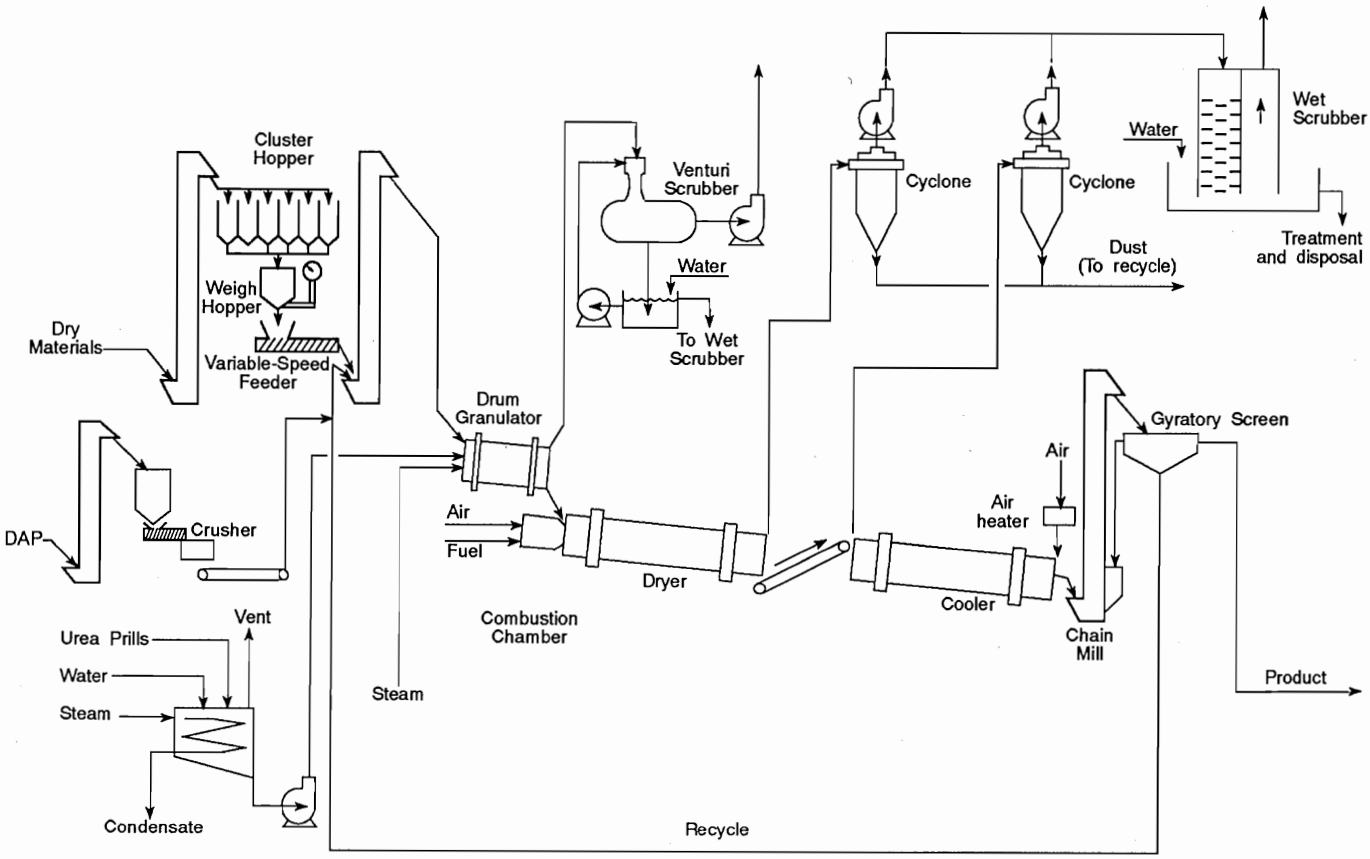

Figure 1. Process Flow Diagram for FPM Urea-Based NPK Granulation Plant.

Description of Process

The process system of the FPM granulation plant is very similar to that of most of the granulation plants found throughout the world. A diagram of the configuration of the FPM plant is shown in Figure 1. The plant is designed to produce 30 tph while operating at a 3:1 recycle-to-product ratio.

The dry materials, namely, phosphate rock, muriate of potash, kieserite, and urea are weighed from a multi-compartment (cluster) hopper system on a batch basis to yield the desired nutrient ratio and are discharged into a surge bin. From the surge bin, the dry raw materials are fed on a continuous basis with a variable speed screw feeder into a continuous-discharge bucket elevator at the rate required for the desired production rate. For grades that require soluble phosphate, diammonium phosphate (DAP) is used. The granular DAP is weighed and crushed on a continuous basis and also fed into the granulator feed elevator. The dry raw materials together with the recycle materials (minus 2.5 mm) are routed to the granulator.

A urea melt or solution provides a portion of the liquid phase required to promote granulation and granule

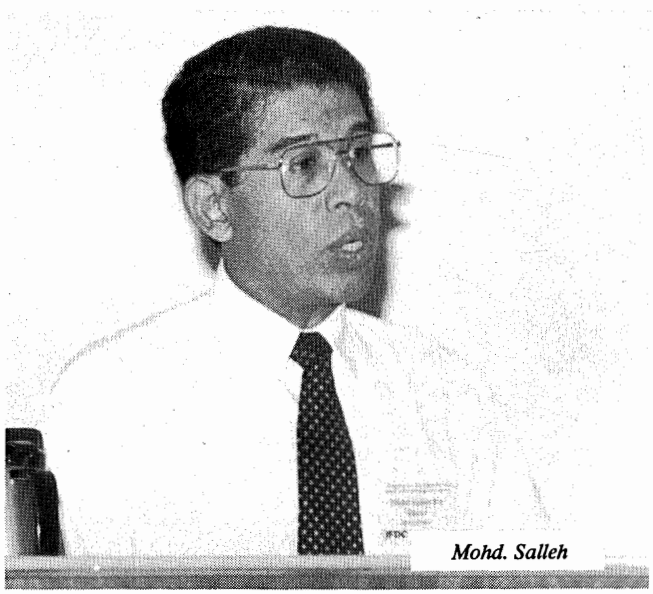
Mohd. Salleh

strength. Generally, 70%-80% of the urea required in a formula is fed to the process as a solution depending upon the grade being produced. The solution is prepared by dissolving urea prills in a steam-heated tank. The solution is pumped to the granulator using a steam-jacketed pump. The solution (usually 75% concentration at 95°-98°C) is sprayed onto the top of the rolling bed of material in the

granulator using three to four hollow cone-type spray nozzles. The urea solution flow rate is measured with a magnetic flowmeter. The urea solution feed rate is matched to the feed rate of dry ingredients to obtain the correct nutrient ratio. To have a better control of the urea solution feed, the temperature and concentration of the solution are also monitored both manually and with electronic measuring units.

The granulator is a rotary drum unit, and the interior is fitted with flexible reinforced rubber panels to minimize the accumulation of buildup. Saturated steam is fed through a drilled pipe sparger beneath the bed of rolling material in the granulator to obtain the desired level of liquid phase and plasticity to promote good granulation of the dry materials with the urea solution. The moist and plastic granular material from the drum granulator is discharged by gravity into a rotary dryer.

The dryer (4.3 m in diameter and 21.3 m long) is heated with a cocurrent flow of air that first passes through a fuel oil-fired combustion chamber located at the inlet (material feed end) of the dryer. The primary function of the dryer is to decrease the moisture content of the partially granulated material from a level of 3%-4% to about 1%. During the drying process, granule formation and compaction also continue. The dryer is normally operated with an abnormally low air temperature (exit air temperature of 65°-70°C) and a relatively high airflow. These conditions are required to achieve the low relative humidity within the dryer needed to obtain adequate drying without overheating the temperature-sensitive and highly soluble urea-based products. The dryer exhaust is passed through a cyclone-type dust collector before entering a wet scrubber. An inclined belt conveyor is used to convey the dryer discharge material into the cooler.

The rotary drum-type cooler, including the exhaust fan and the dust collector system, is identical in design to the dryer but is smaller, and the ambient air which is drawn through the cooler is countercurrent to the material flow. A steam-heated finned-tube heat exchanger is located at the air inlet end of the cooler to heat the ambient air to decrease its relative humidity. The control of air humidity is necessary during startup to avoid buildup on the interior of the cooler and plugging of the dust collector system. Once the system is warmed up, preheating of the cooler air is eliminated. The entire material throughput is passed through the cooler, and normally the material temperature is decreased about 10°-12°C in the cooler. Cooling of the entire throughput is necessary to achieve high-quality screening and minimize the problems associated with blinding of the screen surfaces and plugging of the oversize crushers. The material discharged from the cooler is transferred to the screens by a continuous discharge-type bucket elevator.

Sizing of the cooled product is performed on single deck-type screens. Two screening machines arranged in parallel are used to remove the oversize fraction. The product fraction (3-5 mm) is separated from the undersize material on a second set of screens. Square mesh stainless steel cloth is fitted to the screening machine to yield a product that is uniform and spherical. The oversize fraction (5%-15% of the total feed) is separated from the product and undersize material on the first set of screens arranged in parallel. The crushed oversize is then returned to the screens. The undersize fraction from the screens is returned to the drum granulator along with the dust from the dryer and cooler cyclones.

The product fraction is coated with conditioning clay and stored in a dehumidified bulk storage bay. The product is further cooled (slightly) and cured in the storage bay for about 10-14 hours prior to bagging. The products are bagged in woven polypropylene bags with an independently sealed polyethylene inner liner.

Performance of the Plant – Its Problems and Methods Used to Overcome Them

Since the commercial startup of the granulation plant in 1983, there have been improvements in the plant availability as indicated in Figure 2. This increase in plant availability can be attributed to the control of various downtime items and also to the improvement of operational and maintenance skills.

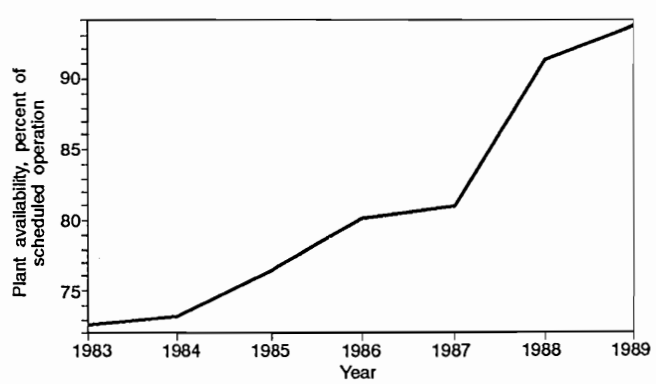

Figure 2. FPM NPK Granulation Plant Availability.

The two major areas that cause problems in the smooth operation of the process plant are (1) the mechanical/electrical system and (2) the process flow system.

The mechanical and electrical system failures were due to undersizing of certain equipment, while the problems in the process flow system were due mostly to difficulties in material flow through the equipment items.

Mechanical Failures

As indicated in Figure 3, downtime due to mechanical failure was fairly high during the first 2 years of operation (1983 and 1984). This was mainly due to inadequate knowledge about granulation plant maintenance, frequent equipment failures caused by overloading, or design errors of certain mechanical systems. During these first 2 years, some of the equipment was either upgraded, replaced, or modified to help reduce the downtime. As can be observed, the average downtime for the first 2 years was 14% compared with slightly less for the next 3 years. During the 1987 annual shutdown, a major revamping of the mechanical system was undertaken in which most of the similar equipment was standardized so as to have common spare parts for effective maintenance. Essential additional spare parts were purchased to avoid downtime due to nonavailability of parts. A significant reduction in mechanical downtime was achieved in the subsequent years (1988 and 1989) indicating the effectiveness of the measures taken. The downtime declined to approximately 3% from an average of 8% in 1987, which is almost a threefold improvement. The effective measures taken could be summarized as follows: (1) continuous upgrading, (2) major revamping combined with the provision of adequate spares, and (3) an effective in-house preventive maintenance program. All of these measures resulted in the significant improvement of mechanical downtime.

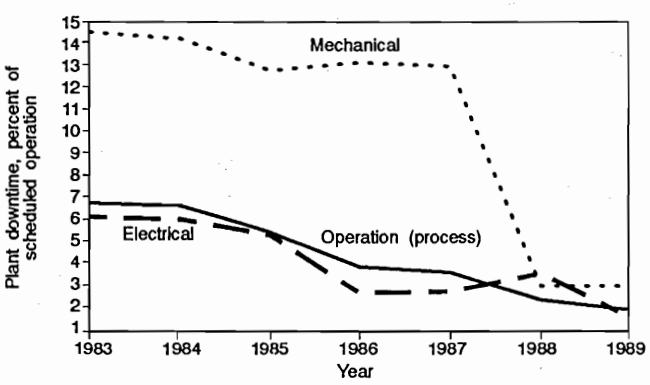

Figure 3. Breakdown of Reasons for FPM Plant Downtime.

Electrical Failures

The electrical downtime during the first 3 years (1983, 1984, and 1985) was fairly high as shown in Figure 3. The main contributing factor to this was the wrong selection of electrical equipment. For example, underpowered drive motors were installed, which gave rise to interrupted operations. Second, the unsuitable selection and location of electrical equipment (starter boards and switch gear) also caused additional downtime when the equipment was attacked by the corrosive fertilizer. Another factor that contributed to the relatively high electrical downtime was overloading of the electrical system, which was due to poor process control and insufficient availability of parts. During the first 3 years, continuous efforts were put forth to overcome the problems previously mentioned. The electrical system was revamped (upgraded) and relocated to a more strategic and enclosed area. In the following years, electrical downtime was decreased approximately 50% – from an average of 6% in the years 1983, 1984, and 1985 to an average of 3% in the following years.

Operating Difficulties

The downtime due to operating difficulties for the first 2 years (1983 and 1984) was about 7%. This high percentage of downtime was mainly due to insufficient knowledge among the operating group about the granulation system. Over the years the downtime has been reduced to less than 3%. The main factors in this reduction include an increase in operating skill and efficiency and the continuous modification and upgrading of the system. The increase in operating skill and efficiency was possible due to the regular in-house training and extensive modification of the material handling system. To further help guide the operating group to achieve better productivity, more elaborate process instrumentation was introduced in 1985. All these factors have not only contributed to the reduction of downtime but also have helped to increase productivity, which is reflected in the increase in annual production over the years as shown in Figure 4.

Dust and Pollution Control

In the FPM process, dry cyclone-type dust collectors and wet scrubbers are used to remove the dust and fumes from the process air before it is exhausted to the atmosphere. A venturi-type scrubber is used to treat the air exhausted from the drum granulator and the ammonia-laden

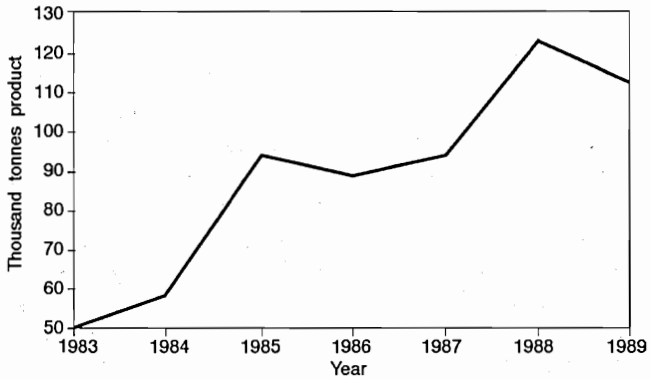

Figure 4. FPM Granulation Plant Annual Production.

air discharged from the urea solution preparation system. The air from the dryer and cooler is passed through dry cyclones where most of the dust is removed. The air is further treated in a wet scrubber to remove fine particles and traces of ammonia and fluorine. The emission of dust at the various transfer points had been a problem in the initial stage of operation. Now, however, a miscellaneous dust pickup system is used to minimize the escape of dust at the transfer points within the process.

Relative Humidity Control

Most of the urea-based products tend to absorb moisture from the atmosphere if the relative humidity is above 50%-55%. The relative humidity of the ambient air at the plant site varies from about 70% at midday to nearly 100% at night. Likewise, the temperature varies from about 27°C to 34°C depending upon time of day. With these conditions it is difficult to routinely operate the process without humidity control. The FPM plant is equipped with two refrigeration units, which can be operated separately or together. Each unit has a capacity of 250 tonnes of refrigeration. Our operating experience has shown that the relative humidity and temperature within the process plant can be maintained at about 50%-55% and 28°-30°C, respectively, by using only one of the refrigeration units. With this setup, the relative humidity within the plant can be maintained at the desired level and a good working environment is provided for the operating staff.

Product Quality and the Role of SIRIM

The FPM granulation process is unique in the sense that there are essentially no chemical reactions involved. The granulation of compounds is achieved by the agglomeration of the various raw materials used, for example, urea, phosphate rock, muriate of potash, kieserite, and occasionally diammonium phosphate. Since no significant chemical reactions occur to contribute to granule formation and liquid phase, the granulation characteristics are carefully controlled by the amount of urea solution added to the granulating mixture. The amount of water (moisture) added is minimized because this water must later be evaporated in the dryer to a very low level in the product (less than 1%) to achieve good long-term product storage characteristics.

The most common recurring problem is the hardening (caking) of products during storage. In the initial stage, the product started to cake in the bags after 1 month and subsequently became severely hardened. In an effort to overcome this short shelf life, a number of coating and conditioning materials were put to the test. Some of the coating/conditioning materials used in pilot-plant evaluations were SAE 20 oil, amines, sulfuric acid, sulfur, kieselguhr, magnesite, limestone, and kaolin clay. Extensive tests were done by FPM on the use of kaolin clay as a coating agent whereby long-term bag storage tests were conducted with untreated and treated samples. Variations

in the proportion of coating clay used were also tested to help decide the optimum amount that should be utilized to give the best result. After much detailed testing, it was observed that kaolin clay would help to prolong the storage life to more than 6 months if approximately 2%-3% by weight was used (depending upon the grade of fertilizer). Also, product moisture is extremely important with regard to caking. A free moisture content of 0.7% to no more than 1.0% is needed to ensure good long-term storage properties.

Besides the caking problem that we faced earlier, we also encountered a fluctuation in nutrient analysis. Earlier when the process plant began operation, composite samples from the product belt were analyzed every 2 hours and whenever there was a nutrient deficiency detected, correction was immediately attempted by adjusting the raw material feed rates. This method of achieving on-specification product was rather cumbersome, in the sense that, despite the frequent correction, the product still fluctuated in chemical analysis. An IFDC technical consultant conducted several on-site tests and analyzed the method we were using for correction of nutrient fluctuations and advised us to composite our samples for up to 8 h. The longer composite period is recommended because the granulation process is continuous and there is a delay between feed input and finished product output. It is often quite misleading to make an adjustment in the raw material feed rates based on the results of single "grab" samples collected over a short period of time. It is more advisable to adjust feed rates only on the basis of a number of product samples composited over a period of 4-8 hours. Of course, it is understood that if all raw material flow instruments are working properly there is no reason to adjust the flow rates. Thus, the need for adjustments in the raw material flow rates to maintain proper product analysis usually results from changes in raw material composition, drifting in flowmeter calibrations, or process upsets that have disturbed the equilibrium in the system. In addition to changing our sampling procedure, we increased the number of batches of raw material weighings from 6 to 12 per hour so as to avoid material stratification/segregation as much as possible. All of the above-mentioned steps proved to be good methods for overcoming the nutrient fluctuation in the product and they are maintained until today.

Certification by the Malaysian Standards Institute of our product was later found to be necessary as it signifies an endorsement that the goods are in good order, physically and chemically. SIRIM (Standards and Industrial Research Institute of Malaysia) is a certifying body in Malaysia, and all of FPM's major grades are approved by SIRIM. To obtain SIRIM certification, our product is sampled and tested in three different production batches in a year. If they meet the required specification, certification is granted, after which samples are randomly picked and analyzed for their nutrient content by the institution. SIRIM also reserves the right to withdraw their approval of our product if at any time the fertilizer specifications are not met.

Future of Urea-Based NPKs in Malaysia

Prior to 1983, the only domestic compound fertilizer production was done by an ammonium nitrate-based NPK compound fertilizer company established in 1966 with an annual capacity of 250,000 tonnes. In 1983, the FPM urea-based NPK plant was established with an annual capacity of about 150,000 tonnes. With this, the Malaysian domestic compound fertilizer production entered a new era.

The market response to the urea-based NPK compounds was not favorable in the initial stages. The farmers in Malaysia were generally brand conscious and also had the impression that urea as a source of nitrogen might not be as effective as their traditional sources. FELDA, one of FPM's shareholders, was very supportive of our compound fertilizer and was the first to slowly replace its traditional ammonium nitrate- and ammonium sulfate-based compound fertilizers with urea-based NPK compounds. With the support of FELDA and an aggressive marketing strategy, we were slowly able to penetrate the Malaysian compound fertilizer market.

The total compound fertilizer production and use in Malaysia is given in Figure 5, and the percentage contribution of urea-based NPK compounds is given in Figure 6. The trends shown in Figure 6 clearly indicate that the urea-based compounds have been accepted in the market. Our contribution has gradually increased from about 20% of the compounds produced in Malaysia in 1983 to about 35% today, and our share is expected to increase even further.

Marketing of urea-based compounds to rubber tree farmers was a major problem because of the phobia of leaching and volatilization of urea-based NPK compounds. The findings of field trials (M. W. Sudin and K. Sivanadyan, 1989) indicating that urea can be successfully used for rubber manuring without ill effects and that it can be applied directly onto the soil surface as an effective alternative nitrogen fertilizer were of great help in penetrating the rubber market. With this, I conclude that urea-based NPK compound production can be a cost-effective alternative process for NPK compound production.

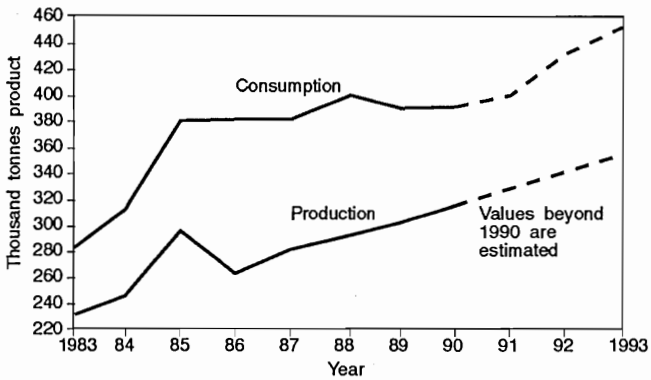

Figure 5. Granular Compound Fertilizer Production and Consumption in Malaysia.

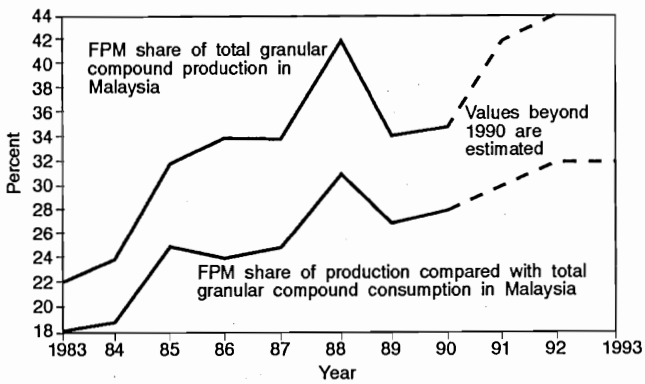

Figure 6. FPM Share of Granular Compound Fertilizer Production in Malaysia.

Role of the Engineering Company in the Implementation of a Urea-Based NPK Granulation Project in Malaysia

Lee D. Hoffman and Glen H. Wesenberg[1]

Abstract

This paper illustrates how a grassroots NPK fertilizer plant project can be implemented with the owner serving as the project manager. The success of such an endeavor is heavily dependent upon a high degree of cooperation among all parties. In this project, the owner, FPM Sendirian Berhad (FPM) of Malaysia, successfully managed the project from its original conception in 1979 through commercial operation, which began in 1983 and continues today.

Introduction

In this paper, I will describe how FEECO International, Inc. (FEECO) took a basic process design, developed through pilot-plant testing by the International Fertilizer Development Center (IFDC), and translated it into a functional mechanical design that then allowed FPM of Malaysia to fabricate most of the major equipment and construct a urea-based NPK granulation plant. Also, I will discuss FEECO's role in helping FPM select local Malaysian equipment fabricators and perform other critical duties, such as alignment of the rotary equipment and the supply of critical parts for the system equipment, for example, rotary drum tires and girth gears. I am not going to go into the process details, formulations, equipment design details, and such, as these items have been or will be covered in detail by others. The main point is how this project was performed in a nonconventional manner. FPM, the client, took on the role as project manager, and with the assistance of IFDC and FEECO designed and built a successfully operating urea-based NPK granulation plant.

Major Roles of FPM and IFDC

The following major activities were performed by FPM with assistance, as needed, from IFDC.

A. Determine market potential and needs.
B. Establish appropriate formulations to meet market needs.
C. Establish sourcing for the required raw materials.
D. Develop the basic process design and operating parameters suitable for use in a commercial-scale granulation plant.
E. Establish overall project feasibility.
F. Arrange for financing.

FEECO'S Role

FEECO's basic expertise deals with the design and fabrication of equipment and engineering of systems for chemical processes, predominantly in the agrichemical industry. Because of experience in the operation of urea-based NPK granulation plants, FEECO is well equipped to serve customers in the following specialized areas:

1. Equipment sizing and selection.
2. Equipment design.
3. General plant and equipment layout.
4. Equipment fabrication.
5. Selection of the appropriate materials of construction.
6. Startup assistance.
7. Training in operation and maintenance of equipment.

FEECO is a well-known combined engineering and equipment manufacturing firm. The term "combined" means that we have the ability to take general engineering concepts, design the appropriate equipment, and then provide drawings for fabrication either in our shop or elsewhere.

Plant Objectives

When FEECO was selected to participate in the FPM project, the following objectives were established and clarified:

- The facility should produce high urea NPK grades best suited for local needs.
- The facility should be of the highest quality and standards available in today's market.

1. Regional Sales Manager and Vice President, Process Engineering, respectively, FEECO International, Inc. – United States.

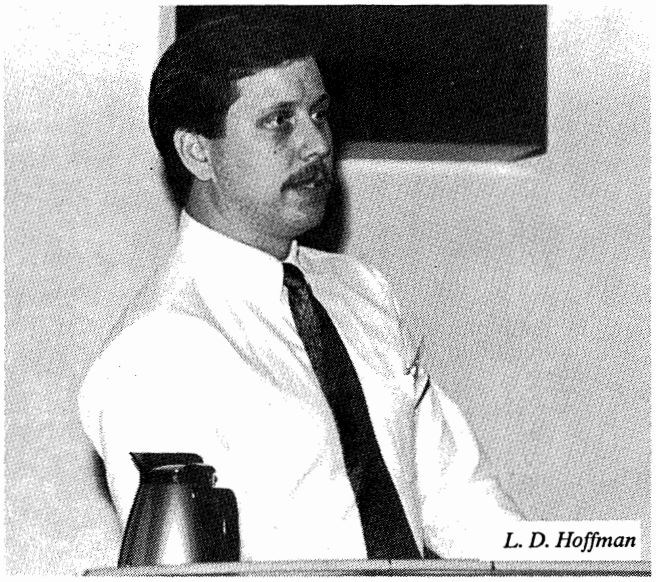
L. D. Hoffman

- The cost to obtain the above facilities should be kept to a minimum.

- The facility should contain as much local (Malaysian) content as possible.

With these objectives in mind, I will explain how FEECO assisted FPM with both the engineering and manufacturing of the equipment system.

First Objective – The Facility Should Produce High-Urea NPK Grades Best Suited for Local Needs

To design an equipment system to meet this objective, FEECO had to know some basic information, such as successful formulations (IFDC determined these from pilot-plant work), type and quality of raw materials to be used, and the rates of production required.

Formulations had to be known or determined for each NPK grade of fertilizer to be produced. Together IFDC, FPM, and FEECO reviewed each formulation before arriving at a set of grades that could be manufactured in the proposed granulation facility. In summary, the following data were obtained from the above review:

- A list of grades to be manufactured.

- A list of the raw materials and quantities to be used in production of the above grades.

- Projections of the quantities of each grade required per year.

- A report indicating the expected optimum production rates for each of the major grades.

Second Objective – The Facility Should be of the Highest Quality and Standards Available in Today's Market

From the information developed in the first objective, along with IFDC's assistance, we were able to do detailed plant design. To accomplish this we first worked through the following four steps:

- We prepared a flow diagram tabulating data for each of the major grades to be produced. The flow diagram consisted of the following five main systems:

1. Batch weigh and feed system:
   a. Clod breaker.
   b. Raw material elevator.
   c. Single-deck screen.
   d. Oversize chain mill.
   e. Cluster hopper.
   f. Weigh hopper.
   g. Gravity blend and surge hopper.
   h. Continuous feed conveyer.
2. Granulation loop:
   a. Recycle surge hopper.
   b. Recycle elevator.
   c. Fluid feed systems.
   d. Urea solution or melt tank.
   e. Scrubber and accessories.
   f. Rotary drum granulator.
3. Drying/cooling loop:
   a. Fuel system.
   b. Burner and controls.
   c. Combustion chamber.
   d. Rotary dryer.
   e. Air pollution equipment and exhaust fans.
   f. Transfer conveyor.
   g. Rotary cooler.
4. Sizing loop:
   a. Screen feed elevator.
   b. Single-deck oversize screens.
   c. Single-deck product screens.
   d. Oversize crushers.
   e. Product elevator.
5. Product coating loop:
   a. Surge hopper.
   b. Coating agent feed system.
   c. Coating drum.

- We then calculated and selected the proper equipment sizes to match the flow diagrams and production rates established.

- Next, we prepared a full description (specification) of each piece of equipment selected.

- We then prepared general layout drawings for the granulation plant.

Third Objective – The Cost of the Facilities Should be Kept to a Minimum

The majority of costs saved were in the following two major areas:

1. By acting as project manager, FPM was able to avoid major administrative costs often associated with large engineering firms.
2. The detailed information supplied by FEECO afforded the project team the flexibility to have much of the fabrication and construction done by local (Malaysian) companies. The following are some of the major advantages that accrued as a result of maximizing local construction content of a facility:
   a. Import duties were minimized.
   b. In the majority of cases, local labor rates were much more attractive.
   c. Freight savings were maximized.
   d. Additional jobs were created in the local market.
   e. Technology was transferred to the local marketplace during the fabrication and construction phases of the project. This technology stays long after the project is completed, thus assisting in the development of the local economy and technical resource base.

The following information is normally supplied by FEECO to facilitate local construction:

1. Detailed specifications and drawings for each piece of equipment.
2. Detailed system layout drawings.
3. Shop fabrication drawings on all equipment to be furnished, including:
   a. Rotary dryer.
   b. Rotary cooler.
   c. Rotary granulator.
   d. Product conditioning system.
   e. Chutes.
   f. Hoppers.
   g. Transitions.
   h. Guards.
   i. Ducting.
   j. Hoods.
   k. Conveyers and bucket elevators.
   l. Metering and control equipment.
   m. Electrical switchgear.
   n. Air handling and emission control equipment.
   o. Other ancillary equipment required for a complete system.
4. Determination of the most appropriate source for each equipment item.
5. Selection of the most appropriate vendors to be sent bid requests. Examples of purchased items include:
   a. Trunnion wheels.
   b. Thrust rollers.
   c. Drives.
   d. Large bearings.
   e. Screens.
   f. Other specialized equipment that would not be available locally.
6. Preparation of inquiries to be sent to the appropriate vendors and evaluation of bids and recommendations as to which supplier should be issued purchase orders. This may include the issue of purchase orders, if appropriate.
7. Inspection and expediting of items purchased for fabrication and erection.

Fourth Objective – The Facility Should Contain as Much Local Content as Possible

In addition to maximizing local fabrication of process equipment, the design/construction information provided by FEECO made it possible to perform essentially all site construction using local construction firms and labor. To facilitate construction, FEECO provided the following:

1. Specifications to be used for construction of the plant including:
   a. Concrete foundations.
   b. Support steel.
   c. Electrical wiring.
   d. Plumbing.
   e. Siding and roofing.
   f. Equipment erection.
   g. Miscellaneous civil works.
2. Drawings for construction of above items.
3. Inquiries (invitation to bid) to be sent to construction bidders.
4. Evaluation of local fabricators' facilities and abilities, including recommendations for award of contracts.
5. Supervision of construction and installation of critical equipment items as requested (for example, the rotary drums).
6. Consultation on startup relative to the equipment and process as requested.

Conclusion

As a result of the above described method of implementation, the FPM factory was constructed in a very economic way and the local economy benefited by providing the majority of equipment fabrication and construction services. An added benefit of the methodology used was that the technical skills of the Malaysian fabrication industry were expanded to include large-scale fertilizer plant equipment fabrication and construction.

Production of Urea-Based Fertilizers With Pipe-Cross Reactor Technology – TVA Experience

B. R. Parker, M. M. Norton, and B. W. Curtis[1]

Abstract

The technical aspects of applying Tennessee Valley Authority (TVA) pipe-cross reactor technology to the production of granular fertilizers containing significant amounts of urea are discussed. Detailed pilot-plant data are given on the production of a variety of grades using various formulations, equipment configurations, and operating conditions. The results demonstrate the feasibility of using pipe-cross reactor technology for the production of urea-based NPK formulations. Although the preneutralizer and its associated problems are eliminated, use of the pipe-cross reactor presents a very specific need for close process control, particularly in regard to the choice of raw materials and control of process temperatures to avoid excessive corrosion. These parameters are discussed in detail.

Introduction

For more than 25 years, the Tennessee Valley Authority (TVA) has conducted research and development programs to demonstrate the use of urea as a source of supplemental nitrogen for the production of granular fertilizers. Urea often causes granulation and drying problems, and the hygroscopic products may require special handling. However, interest in using urea continues because it has a high analysis, which can result in savings in shipping and production costs, and it does not have some of the attendant hazards of ammonium nitrate.

In 1964, a process for production of granular urea-ammonium phosphate fertilizer based on diammonium phosphate (DAP) with the addition of urea as supplemental nitrogen was demonstrated (1). When solid urea was used, it was metered into the recycle stream in a typical DAP-type plant, and when urea solution was used, it was added directly to the granulator. This slurry process has been used successfully in large commercial operations in India and other parts of the world to produce such urea-based grades as 28-28-0, 14-35-14, 15-15-15, 14-28-14, and 19-19-19 (2,3,4).

Other similar processes using nongranular monoammonium phosphate (MAP) as the basic source of phosphate and urea as supplemental nitrogen have been successful in commercial operations. Often these require small amounts of either phosphoric or sulfuric acid and ammonia to enhance granulation. This process has been used in Spain, Turkey, and the United Kingdom (5,6).

Urea has been used in combination with either single or triple superphosphate to produce granular NP or NPK fertilizers (7,8), and this process has been popular in the United Kingdom for production of a 20-10-10 grade.

However, the presence of urea in the above granular products makes drying difficult, because high temperatures cannot be used without melting the product. Because of the drying problems associated with urea-based products, more recent research and development programs have concentrated on the production of urea-based products with melt-granulation processes. In these processes, all or a part of the fertilizer ingredients are fed to the granulator in the form of melts or low-moisture slurries, and because of the low moisture content, little or no drying is required.

Previous Melt-Granulation Processes

Pipe-reactor processes, in which ammonium phosphate melts were formed by the reaction of ammonia and phosphoric acid in a standard pipe tee and pipe reaction tube and then distributed to a granulator, were shown to be adaptable to the production of urea-based products. One process, which used a spray reactor, pipe reactor, vapor disengager, and pug mill, was used in TVA's demonstration-scale melt-granulation plant for more than 10 years to produce 28-28-0 and 35-17-0 grades of urea-ammonium phosphate products at production rates up to 450 and 340 stpd (409 and 309 tpd), respectively (9,10). Good-quality products containing 20% to 35% of their phosphate as polyphosphates were made, but the process

1. Chemical Engineer, Senior Scientist, and Research Chemist, respectively, Tennessee Valley Authority (TVA) – United States.

was not commercially accepted because of the non-typical equipment.

Another melt-granulation process was shown on pilot scale to the fertilizer industry in 1974, in which an ammonium phosphate melt was produced in a tank preneutralizer followed by a pipe reactor and then fed to a drum granulator. Urea and other solid feed materials were added to the recycle stream, so that typical grades, such as 19-19-19, 12-24-24, and 15-30-15, could be produced (11,12). It was initially thought that the preneutralization step decreased the formation of scale buildup in the pipe reactor, but later testing showed that the preneutralizer could be omitted and subsequently resulted in the development and use of the pipe-cross reactor.

Melt-Granulation Process Using a Pipe-Cross Reactor

The pipe-cross reactor was developed in a unique way in that its incorporation into a commercial-scale fertilizer granulation plant was followed by pilot-plant studies to further define the desired operating parameters and grades that could be made. The pipe-cross reactor was developed in an effort to solve an environmental problem encountered while incorporating sodium nitrate into a granular fertilizer. The byproduct sodium nitrate was in the form of fine, moist crystals not suitable for direct application to the soil. In early tests of incorporating the crystals into a granular fertilizer, the reaction of the sodium nitrate, sulfuric acid, and ammonia as they were fed to the granulator resulted in flames and emission of large volumes of brownish-white fumes from the granulator. The addition of phosphoric acid did not suppress the flames and fuming, so a pipe-cross reactor was installed in place of the preneutralizer.

The initial commercial-scale pipe-cross reactor used a standard 3-inch-diameter pipe as the reaction tube and was similar to previous pipe reactors used except for one significant aspect – the feed end was designed in the configuration of a standard pipe cross rather than a pipe tee as with the prior pipe reactors. In Figure 1, where one typical reactor used in pilot-plant testing is shown, a standard pipe-cross fitting is used. This pipe-cross configuration allowed the separate but simultaneous introduction of sulfuric acid and the subsequent neutralization reaction of the phosphoric and sulfuric acids with ammonia. Enough ammonia, either gas or liquid, was added to neutralize the sulfuric acid and to produce the desired melt NH_3:H_3PO_4 mole ratio. The melt was discharged by pressure developed within the reaction tube onto the rolling bed of solids in a drum granulator.

Advantages of the Pipe-Cross Reactor

Subsequent operation of the pipe-cross reactor, both in commercial and pilot-scale operation, showed several advantages over the use of a preneutralizer in a conventional drum granulation plant. The early operation produced NP or NPK grades without the addition of urea, but subsequent operation with urea addition showed similar or, in some cases, slightly less advantage. These advantages include the following:

1. Larger amounts of acids, both phosphoric and sulfuric, can be used in the formulations.

2. Drying of the product is often not required, and drying costs are lower.

3. There is less formation of troublesome, difficult-to-scrub ammonium chloride fumes in the granulator exhaust gases when sulfuric acid and potassium chloride are included in a formulation.

4. Investment costs are lower and operation of the plant is easier because the preneutralizer and its associated pumps, piping, and meters are not required.

5. Pollution control is less complex and less expensive because the preneutralizer and its scrubbers are eliminated.

6. Moisture content of the pipe-cross reactor slurry or melt is lower than that of a preneutralizer slurry, as there is a more favorable water balance in the process.

7. Granular MAP can be conveniently produced and can be used to blend a wider range of grades than can DAP.

Pipe-Cross Reactor Design and Operating Criteria

The temptation to make the design and operation of a pipe-cross reactor too complicated should be avoided. Although there is a range of design criteria for sizing a pipe-cross reactor and there will be slight variations depending upon the grade(s) to be produced, the following are guidelines to follow when orthophosphate-based fertilizers are to be produced:

1. The optimum heat flux per unit of pipe-cross section, based on the chemical reaction occurring in the reactor, is 600×10^3 Btu/h • in^2 (23.4×10^3 kcal/h • cm^2).

2. The ammonia sparger should be installed in the longitudinal centerline of the pipe and extend at least one pipe diameter past the end of the cross.

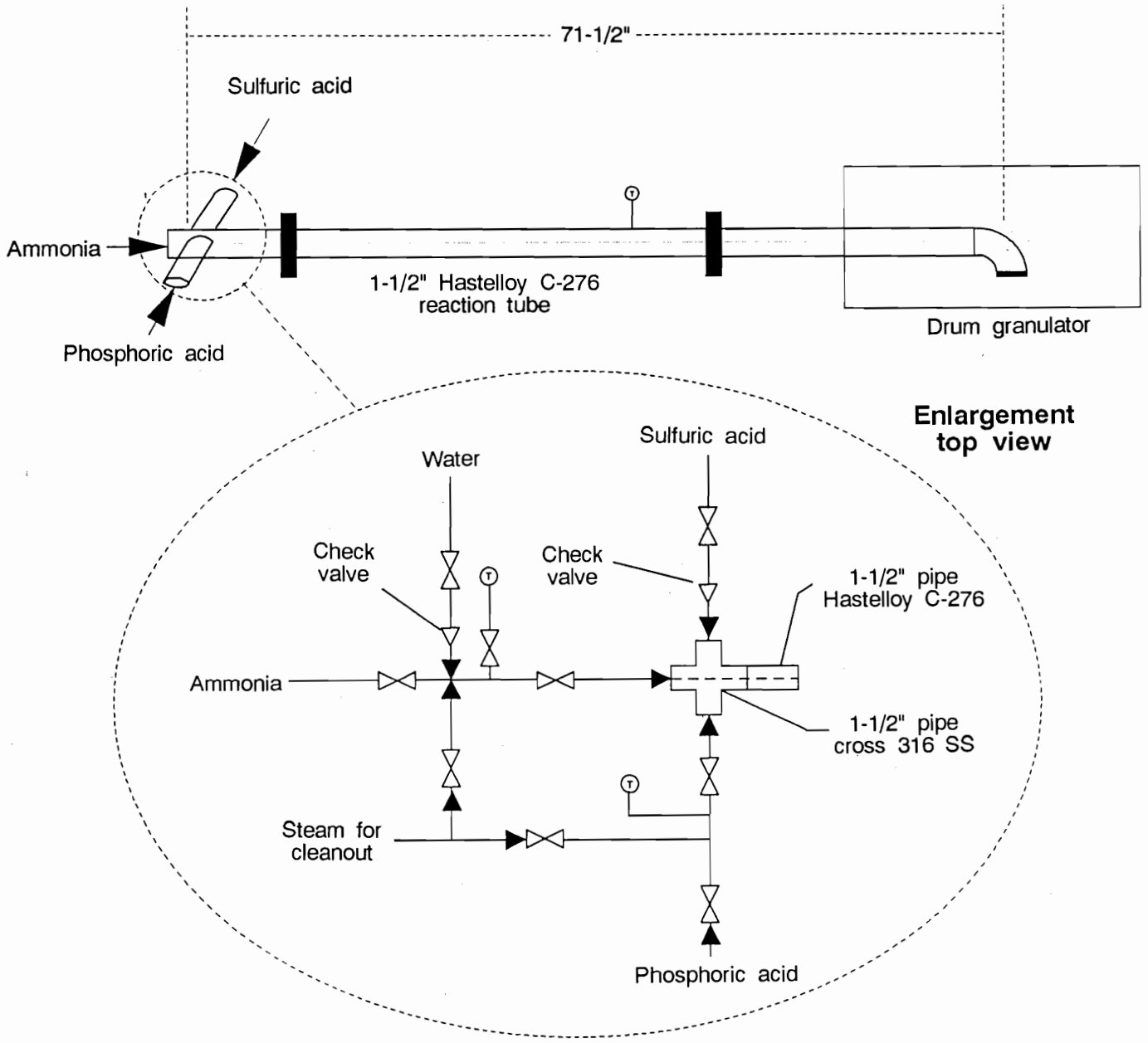

Figure 1. Configuration of TVA Pipe-Cross Reactor.

3. The minimum length of the reaction tube is 9 feet (2.7 m).

4. The volume of the reaction tube should be based on a maximum ammonia loading of 1.2 $lb/h \cdot in^3$ (0.033 $kg/h \cdot cm^3$) for MAP-based NP or NPK fertilizers and 0.7 $lb/h \cdot in^3$ (0.02 $kg/h \cdot cm^3$) for DAP manufacture.

5. The reaction tube should be constructed of Hastelloy C-276 or C-4 pipe. Type 316 stainless steel is suitable only when no sulfuric acid is fed to the reactor.

6. Water must be fed to the reactor with liquid ammonia but is not required with gaseous ammonia. The usual water-to-ammonia weight ratio in the feed to the reactor is 0.3, but ratios as low as 0.05 and as

high as 1.0 have been used successfully. Although not required, a small amount of water fed with gaseous ammonia will result in smoother operation and more uniform reaction. The reactor temperature can be controlled by the water addition to the ammonia or by addition of a separate stream of water or scrubber liquor to the reactor.

7. The reactor temperature (skin temperature is usually most easily measured) should be maintained between 270° and 300°F (132°-149°C) for best reactor operation for MAP-based grades. At temperatures above 400°F (204°C), polyphosphates are produced, but potential for buildup within the reactor exists. The range between 300° and 400°F (149°-204°C) should be avoided if possible because of greater tendency of increased buildup. Corrosion is more severe above 400°F (204°C) when sulfuric acid is used, and the material of construction recommended earlier may not give acceptable reactor life.

8. The reaction tube should be sloped upward toward the granulator for more complete reaction and lower ammonia evolution.

9. Melt or slurry from the reactor should discharge onto the center of the granulator bed at a longitudinal distance of one-third to one-half the distance from the feed end. The discharge should be at least 2 feet (61 cm) above the bed.

10. A minimum of 100 pounds (45 kg) of phosphoric acid per short ton of product should be included in the formulation to minimize corrosion of the reaction tube. It is desirable that the ratio of phosphoric acid to sulfuric acid be maintained at 1:1 or greater because corrosion increases as this ratio decreases.

11. All the sulfuric acid in the formulation should be fed to the pipe-cross reactor to minimize formation of ammonium chloride particulate in the granulator when producing NPK grades with potassium chloride.

12. The formulation should be calculated to give a pipe-cross reactor melt NH_3:H_3PO_4 mole ratio of 1.0 for MAP-based products. Smoother, rounder product and lower ammonia evolution can be obtained if a portion of the phosphoric acid is fed to the granulator or if the pipe-cross reactor melt mole ratio is maintained between 0.6 and 0.8 and additional ammonia is added to the bed.

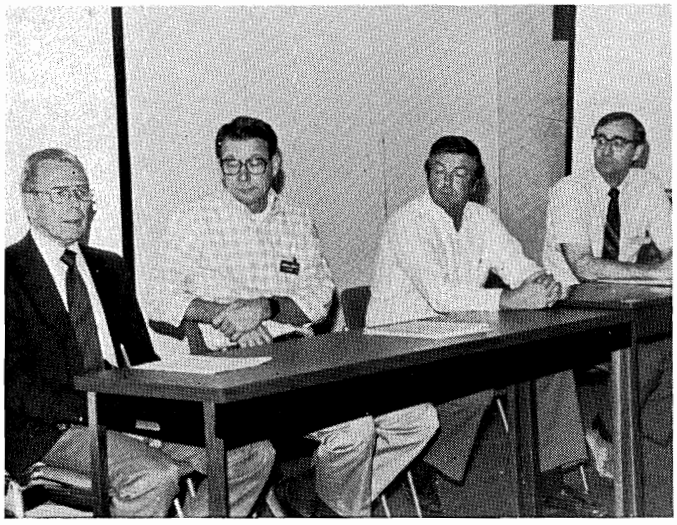

Pilot-Plant Production of Urea-Based Fertilizers

By the early 1980s there were more than 30 commercial plants in the United States that had a pipe-cross reactor installed or planned (13). Initial production of fertilizers in these plants included many grades of ammonium phosphate sulfate fertilizers, and although urea-based grades were successfully made in several commercial plants, this paper focuses on urea-based grades made during an extended pilot-plant test program at TVA. This allows better comparisons of a wide range of products. The commercial plants operated with an orthophosphate system where pipe-cross reactor melt temperatures below 300°F (149°C) produced ammonium orthophosphates. Some of the pilot-plant testing used higher temperatures so that some of the orthophosphates were converted to polyphosphates. In many cases, products with polyphosphate contents can be used as intermediates to produce superior fluid fertilizers, but in general the polyphosphates do not result in superior agronomic or storage properties for the granular fertilizers. In addition, the higher reactor temperatures result in an increased tendency for buildup in the pipe and, when sulfuric acid is also fed to the reactor, increased corrosion. The data on pilot-plant operation should be taken not as recommendations to produce these grades but as examples and comparisons of options.

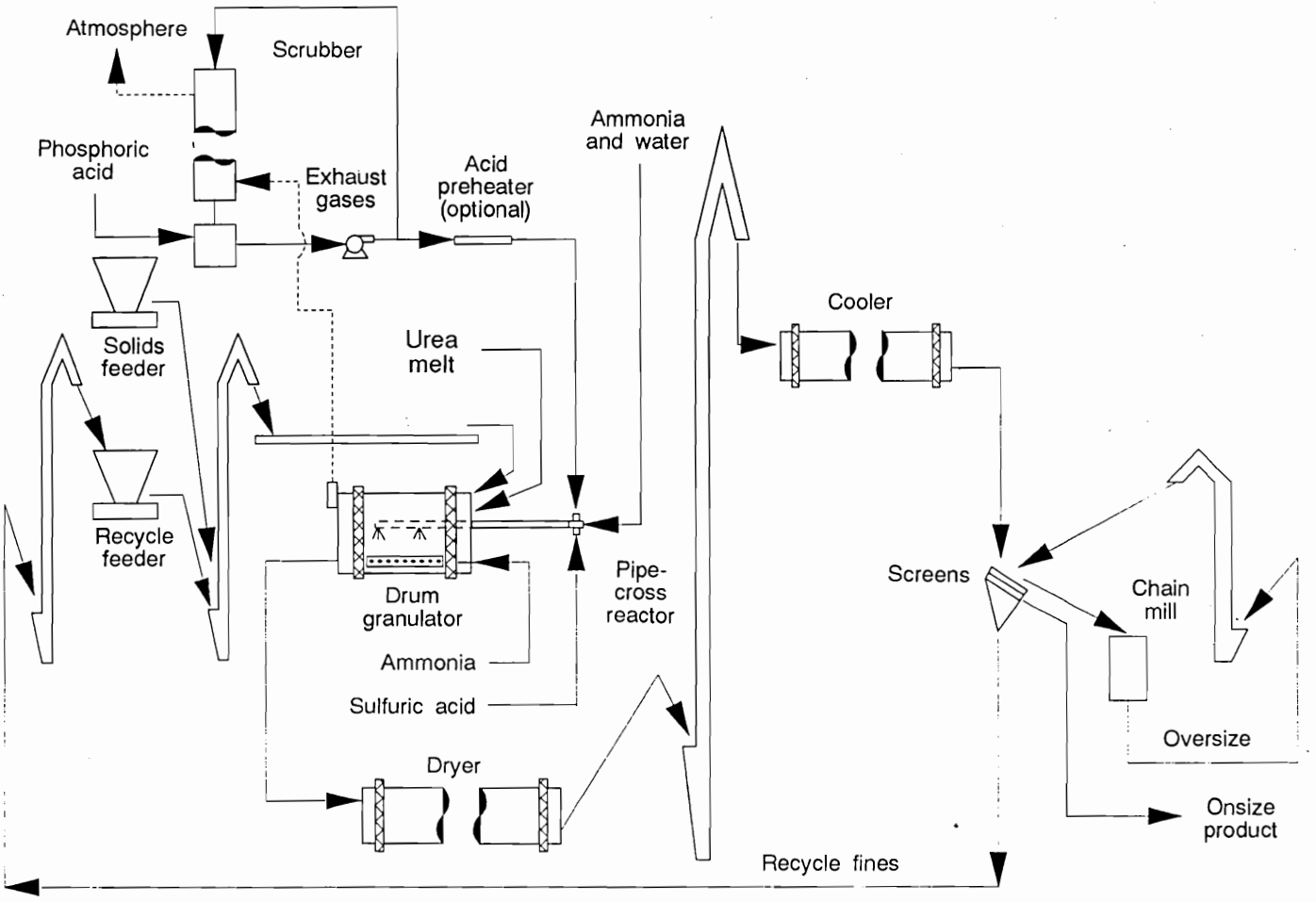

Figure 2. Pipe-Cross Reactor/Drum Granulator Process.

A simplified flow diagram of the process used in the pilot-plant testing is shown in Figure 2. Urea was added either as a melt sprayed from a hollow-cone nozzle onto the granulator bed or as a solid along with the recycle to the granulator. Solid urea was added in the form of microprills or prills that had been crushed in a roll crusher. Regular prills could not be well incorporated into homogeneous granules when 6 and 10 Tyler mesh (3.4 and 1.7 mm) product screens were used. Prills possibly could be incorporated if larger product sizes were made.

Production of NP Grades With No Sulfuric Acid Addition

Initial pilot-scale tests were done with formulations that did not contain sulfuric acid. Some urea-ammonium phosphate products had been produced in demonstration-scale units using a pug mill, so it was thought that these might be readily produced with the pipe-cross reactor and drum granulator process. Table 1 shows operating conditions when three different grades were tested. In most tests, products could be made without drying while still maintaining a moisture content within the desired range of 0.5% to 1.0% for urea-based formulations with $N:P_2O_5$ ratios of 1:1 or higher (12).

1-1-0 Ratios – The 28-28-0 and 27-27-0 grades both contained about 50% urea. The 28-28-0 grade was best made by using urea melt and maintaining a pipe reactor melt mole ratio of about 0.6. Although a higher recycle ratio was required than when urea microprills were used, better granulation control was possible and additional water was not required to promote granulation. The 27-27-0 grade had a portion of the phosphate fed as nongranular MAP, but less than 40% of the phosphate could be replaced with this solid while maintaining acceptable granulation. Even then the granulator temperature had to be controlled within a very narrow range to maintain granulation. Too high a temperature resulted in melting and overgranulation and too low in an excess of dust and undergranulation. Neither product required drying or use of a conditioning agent for acceptable storage.

Table 1. Formulations and Typical Operating Conditions for Pilot-Plant Production of Granular Urea-Based NP Fertilizers Without Sulfate Addition

NOMINAL GRADE	28-28-0	28-28-0	27-27-0	35-17-0	35-17-0	40-8-0
Urea added as	microprills	melt	melt	melt	melt	melt
Percent urea in formulation	49	49	49	69	69	83
Ammonia fed as	gas	gas	gas	gas	gas	gas
Dryer used	no	no	no	no	no	no
FORMULATION, lb/ton product (kg/mt)						
Pipe-cross reactor						
Ammonia	142 (71)	82 (41)	102 (51)	82 (41)	49 (25)	23 (12)
Phosphoric acid (54% P_2O_5)	1,044 (522)	1,055 (528)	787 (394)	633 (317)	630 (315)	294 (147)
Urea (46% N)	0 (0)	0 (0)	0 (0)	0 (0)	0 (0)	1,660 (830)
Drum granulator						
Ammonia	7 (3.5)	55 (28)	5 (2.5)	0 (0)	33 (17)	0 (0)
Urea (46% N)	970 (485)	987 (494)	987 (494)	1,377 (689)	1,377 (689)	0 (0)
Nongranular MAP (10% N, 50% P_2O_5)	0 (0)	0 (0)	280 (140)	0 (0)	0 (0)	0 (0)
FORMULATED NH_3:H_3PO_4 MOLE RATIO						
Reactor melt/slurry	1.05	0.6	1.0	1.0	0.6	0.6
Product	1.1	1.0	1.05	1.0	1.0	0.6[a]
PIPE-CROSS REACTOR						
Equivalent acid concentration, % P_2O_5	52	51	55	52	52	52
Temperature, °F (°C)	393 (201)	288 (142)	381 (194)	394 (201)	263 (128)	309 (154)
DRUM GRANULATOR						
Recycle ratio, lb/lb product	2.5	3.8	3.0	3.4	4.0	1.6
Discharge temperature, °F (°C)	188 (87)	189 (87)	194 (90)	190 (88)	177 (81)	211 (99)
Moisture (AOAC), %	1.0	1.0	0.7	0.7	1.1	0.4
Ammonia evolution, % of total feed	6.8	0.7	12.4	13.0	2.9	-
PRODUCT (UNCONDITIONED), %						
N	27.8	27.0	28.6	33.5	35.5	42.6
P_2O_5	29.7	30.8	27.3	20.6	17.2	9.2
Moisture (AOAC)	0.7	0.8	0.4	0.4	0.7	0.3

a. A portion of the urea fed to the reactor decomposed and further ammoniated the reactor melt to a 1.3 mole ratio.

2-1-0 Ratio–The 35-17-0 grade contained about 69% urea, which was fed as a melt. It is unlikely that this grade could be made easily with solid urea, because of the small quantity of liquid phase to granulate the quantity of solid. However, a combination feed of solid urea and urea melt or concentrated solution may be feasible. Although the tests shown did not use drying, some drying may be required for best operation. The first test shows a high pipe-cross reactor melt temperature because formation of some polyphosphate in the product was desired. To make a product without polyphosphate, use of the additional water required to maintain the temperature below 300°F (149°C) would make drying necessary. The product moisture content was above 1% in the second test and some drying might be needed. The product required no conditioning for suitable storage up to 9 months when product moisture was 0.8% or less.

5-1-0 Ratio–A 40-8-0 grade was produced using a falling-curtain granulation process in which reactor melt was sprayed onto a falling curtain of recycled solids in a flighted drum granulator. Molten urea was introduced to the reactor along with ammonia and phosphoric acid, and although relatively low melt temperatures were obtained, about 25% of the ammonium phosphates were converted to polyphosphates during the resulting condensation reaction. As a result, the free ammonia from the decomposition of some of the urea ammoniated the phosphoric acid past the formulated melt mole ratio of 0.6 to the final product mole ratio of about 1.3 as noted in Table 1. The quantity of ammonia evolved from the granulator was not recorded, but indications were that it was low.

Production of NP Grades With Sulfuric Acid Addition

Subsequent testing was done with grades containing additional sulfate added in the form of sulfuric acid fed to the pipe-cross reactor. The addition of the sulfate created additional processing and handling problems because of increased hygroscopicity. Results of typical tests are shown in Table 2.

3-1-0 Ratio–A 33-11-0-3S grade containing about 60% urea in the formulation fed as a melt was one product

Table 2. Formulations and Typical Operating Conditions for Pilot-Plant Production of Granular NP Urea-Based Fertilizers With Sulfate Addition

NOMINAL GRADE	33-11-0-3S		33-11-0-5S		33-11-0-3S		25-25-0-4S		25-25-0-4S		25-25-0-4S		32-16-0-3S	
Urea added as	melt		melt		melt		melt		melt		micro-prills		micro-prills	
Percent urea in formulation	63		61		59		36		36		36		58	
Ammonia fed as	gas		gas		gas		gas		gas		gas		gas	
Dryer used	no		no		no		no		no		no		yes	
FORMULATION, lb/ton product (kg/mt)														
Pipe-cross reactor														
Ammonia	96	(48)	96	(48)	136	(68)	158	(79)	206	(103)	158	(79)	111	(56)
Phosphoric acid (54% P_2O_5)	412	(206)	412	(206)	412	(206)	940	(470)	940	(470)	940	(470)	605	(303)
Sulfuric acid (92% H_2SO_4)	200	(100)	200	(100)	200	(100)	266	(133)	266	(133)	266	(133)	200	(100)
Water	168	(84)	128	(64)	136	(68)	0	(0)	12	(6)	66	(33)	40	(20)
Drum granulator														
Ammonia	21	(11)	21	(11)	35	(18)	48	(24)	0	(0)	48	(24)	31	(16)
Ammonium sulfate (20.7% N)	0	(0)	165	(83)	0	(0)	0	(0)	0	(0)	0	(0)	0	(0)
Urea (46% N)	1,259	(630)	1,217	(609)	1,183	(592)	728	(364)	728	(364)	728	(364)	1,150	(575)
FORMULATED NH_3:H_3PO_4 MOLE RATIO														
Reactor melt/slurry	0.6		0.6		1.35		0.6		1.0		0.6		0.6	
Product	1.0		1.0		2.0		1.0		1.0		1.0		1.0	
PIPE-CROSS REACTOR														
Equivalent acid concentration, % P_2O_5	39		40		41		53		54		49		48	
Temperature, °F (°C)	264	(129)	269	(132)	278	(137)	359	(182)	403	(206)	306	(152)	387	(197)
DRUM GRANULATOR														
Recycle ratio, lb/lb product	3.5		3.8		3.9		5.5		7.0		4.3		2.8	
Discharge temperature, °F (°C)	186	(86)	170	(77)	179	(82)	192	(89)	181	(83)	175	(79)	179	(82)
Moisture (AOAC), %	1.3		1.2		1.3		1.2		1.3		2.2		1.3	
Ammonia evolution, % of total feed	7.0		5.2		21.2		8.7		15.8		3.0		4.0	
PRODUCT (UNCONDITIONED), %														
N	35.6		33.9		34.6		25.2		25.4		25.1		31.5	
P_2O_5	11.9		11.5		12.3		25.1		26.2		26.0		17.9	
SO_3	8.6		14.0		10.3		13.4		13.3		12.3		10.0	
Moisture (AOAC)	0.9		0.8		1.4		1.0		1.0		1.7		1.0	

tested. With good operation, the recycle ratios were only marginally higher than those with grades without sulfate. Humid ambient conditions resulted in a tendency toward increased wetness during processing, and higher recycle ratios were required. Dust collection required special steps that are described in a following section. Best operation was obtained when the melt mole ratio was controlled at about 0.6 and additional ammonia was added to the granulator. One test was made in the DAP mode with a 1.35 mole ratio slurry and a 2.0 mole ratio product, but the ammonia evolution from the granulator was 21% of the total ammonia fed to process versus only 5% to 7% at the lower mole ratios. The products required a 2% conditioning clay coating for satisfactory storage.

1-1-0 Ratio–A 25-25-0-4S grade which contained 36% urea was tested, and again the significance of the sulfate was obvious. As shown in Table 2, the recycle ratios for this product were significantly higher than those for a similar 28-28-0 product shown in Table 1. The recycle ratios for the 25-25-0-4S grade could be lowered by decreasing the sulfuric acid in the formulation, substituting solid ammonium sulfate, using solid urea rather than melt, and using lower ammoniation rates in the pipe-cross reactor, but even then the recycle ratios were greater than 4 to 1. Tests indicate that some drying would be required to reduce the product moisture below 1%, but no conditioner would be required for acceptable storage.

2-1-0 Ratio–A 32-16-0-3S grade fertilizer containing 58% urea was tested, but granulation was poor. Product from the granulator was damp and contained agglomerates with low crushing strengths and many unincorporated urea microprills. Operating conditions were varied, but granulation was not improved and drying was required to reduce product moisture to 1%.

Table 3. Formulations and Typical Operating Conditions for Pilot-Plant Production of Granular NPK Urea-Based Fertilizers

NOMINAL GRADE	20-10-10-12S	17-17-17-4S	17-17-17-3S	17-17-17-3S	15-15-15-11S	15-15-15-11S
Urea added as	microprills	microprills	microprills	----------prills (crushed)----------		
Percent urea in formulation	17	22	24	24	16	16
Ammonia fed as	liquid	gas	gas	gas	gas	gas
Dryer used	no	no	yes	yes	yes	yes
FORMULATION, lb/ton product (kg/mt)						
Pipe-cross reactor						
Ammonia	144 (72)	134 (67)	81 (41)	146 (73)	197 (99)	168 (84)
Phosphoric acid (54% P_2O_5)	371 (186)	635 (318)	635 (318)	635 (318)	561 (281)	561 (281)
Sulfuric acid (92% H_2SO_4)	300 (150)	266 (133)	100 (50)	200 (100)	384 (192)	384 (192)
Water	80 (40)	38 (19)	0 (0)	34 (17)	60 (30)	140 (70)
Drum granulator						
Ammonia	0 (0)	33 (17)	33 (17)	0 (0)	0 (0)	29 (15)
Ammonium sulfate (20.7% N)	601 (301)	0 (0)	124 (62)	0 (0)	0 (0)	0 (0)
Urea (46% N)	340 (170)	448 (224)	484 (242)	484 (242)	320 (160)	320 (160)
Potassium chloride (60% K_2O)	333 (167)	567 (284)	567 (284)	567 (284)	0 (0)	0 (0)
Potassium sulfate (50% K_2O)	0 (0)	0 (0)	0 (0)	0 (0)	600 (300)	600 (300)
FORMULATED NH_3:H_3PO_4 MOLE RATIO						
Reactor melt/slurry	1.0	0.6	0.6	1.0	1.0	0.6
Product	1.0	1.0	1.0	1.0	1.0	1.0
PIPE-CROSS REACTOR						
Equivalent acid concentration, % P_2O_5	44	48	52	49	42	38
Temperature, °F (°C)	290 (143)	421 (216)	312 (156)	352 (178)	439 (226)	346 (174)
DRUM GRANULATOR						
Recycle ratio, lb/lb product	3.3	5.4	3.6	6.3	6.0	4.5
Discharge temperature, °F (°C)	169 (76)	179 (82)	165 (74)	174 (79)	198 (92)	173 (78)
Moisture (AOAC), %	0.9	1.5	1.5	1.2	0.7	1.2
Ammonia evolution, % of total feed	6.4	1.2	3.1	7.3	5.3	7.4
PRODUCT (UNCONDITIONED), %						
N	20.0	17.1	17.0	17.7	15.9	14.8
P_2O_5	11.5	17.4	17.9	17.5	17.9	15.9
K_2O	12.0	17.3	19.0	17.3	15.4	17.6
SO_3	25.8	13.2	9.5	11.8	25.2	31.0
Moisture (AOAC)	1.0	1.2	1.1	0.7	0.1	0.6

Production of NPK Grades With Sulfuric Acid Addition

NPK grades have been tested that contain 16 to 24% urea and up to about 20% sulfuric acid. Table 3 shows these formulations and typical operating conditions. Urea was fed to the process along with the solid recycle either as microprills or as prills that had been crushed in a roll crusher. Prills fed directly to the process without crushing could not be easily incorporated into homogeneous granules. In general, best results were obtained when the melt mole ratio was maintained at about 0.6 and additional ammonia was added to the granulator to give a product mole ratio of 1.0. Potassium sulfate was used as the potassium source for the 15-15-15-11S grade with results similar to those in previous tests using potassium chloride. All NPK products required at least a 1% conditioning clay coating for acceptable storage.

Production Problems With Urea-Based Fertilizers

The testing showed that the introduction of urea into formulations resulted in hygroscopic products and additional processing and handling problems. Adding other compounds, such as sulfates or potash, further decreased the critical relative humidity of the resulting product and compounded the problems encountered with urea-based fertilizers. Since the TVA testing was done, some of these problems have been well documented in IFDC and TVA publications (4,14,15), so no effort is made here to cover this subject in detail. Some problem areas are discussed in general.

Granulation – Granulation must be closely monitored when urea is present in a formulation because of the greater tendency for melting the product. The granulator

temperature must usually be controlled in a narrow range to avoid melting and overagglomeration at higher temperatures or insufficient granulation and dustiness at lower temperatures. This temperature range was usually 10° to 20°F (6°-11°C), but with some grades, the 27-27-0 grade for example, the range was only 3° to 5°F (2°-3°C). With a melt granulation process, the temperature can be controlled by adjusting the reactor melt mole ratio or the recycle ratio. Addition of water to the reactor or granulator can more readily be used but will result in additional water to remove in the dryer.

Drying–Again, because of the greater tendency for melting, urea-based fertilizers must be dried with more care than other fertilizers, such as ammonium phosphates. It is important that dryer air and product temperatures are controlled to eliminate melting or reabsorption of moisture within the dryer. Other publications have detailed these problems and solutions (15).

Product Hygroscopicity–The addition of urea decreases the critical relative humidity of a fertilizer product, and the addition of other nutrient products, such as sulfates or potash, further decreases the critical relative humidity. However, the critical relative humidity is usually reported for a single temperature, usually 86°F (30°C). Physical property testing of urea-based products made in early pilot-plant tests shows that the critical relative humidity also decreased with increasing temperatures as shown in Figure 3. This important consideration when designing dryers or dust collection systems has since been well defined in later publications (12,15).

The hygroscopic nature of a product is not fully defined by the critical relative humidity, which is the relative humidity at which the product will begin to absorb moisture. The rate of moisture absorption must also be considered, and products such as 33-11-0-3S and 25-25-0-4S that contain urea along with sulfate quickly

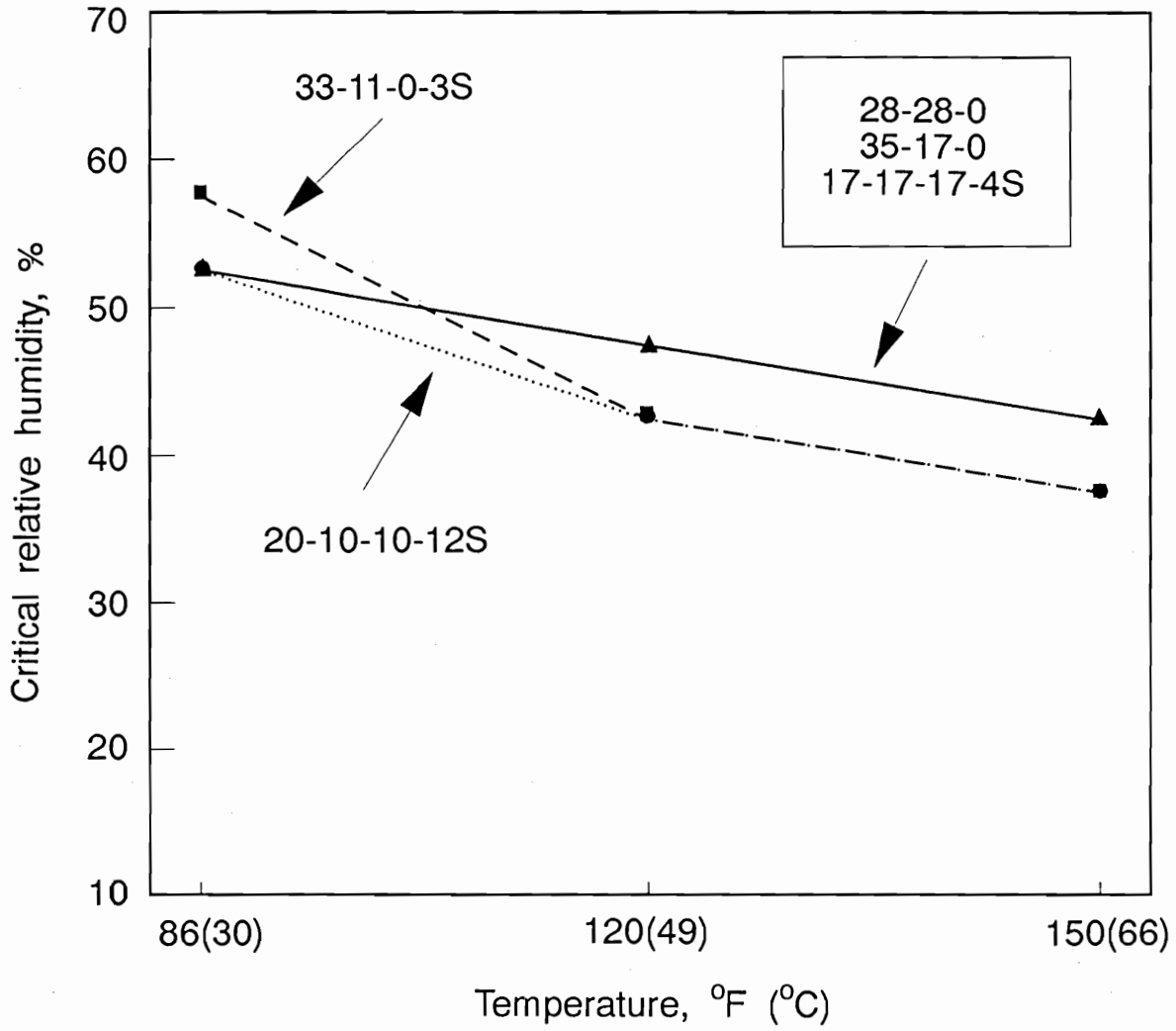

Figure 3. Effect of Temperature on Critical Relative Humidity of Urea-Based Granular Fertilizers.

absorb moisture at conditions above their relative critical humidity and may require special precautions, such as dehumidified processing areas, protection in storage, or bagging of the product in moisture-proof bags. On humid days, these products will become wet in a matter of minutes, so precautions should be taken during startup and temporary shutdowns of the granulation plant and in storage so that ambient air is not allowed to contact product in the system.

Dust Collection – Because of their hygroscopic nature, urea-based fertilizers require special attention during collection of dust evolved from the process. Wet-collection systems are commonly used and do an efficient job; however, with melt processes, wet scrubbing may introduce too much water to the process and cause an unfavorable water balance. A wet scrubber had been used in TVA's granulation pilot plant, but less than half the solution produced could be returned to process. Dry collection seemed the ideal solution, but problems due to the hygroscopic products had to be considered. In 1979, a pulse jet-type baghouse dust collector was installed for the pilot-plant miscellaneous dust collection points. Included was an air heating-recirculation system to allow introduction of heated ambient air during operation and heating and recirculation of air through the baghouse when it was not in operation.

The initial urea-based product made after the baghouse installation was a 33-11-0-3S grade. In the first test the ambient air relative humidity was greater than 60% and the experience showed the baghouse could not have been operated without heated makeup air. Initially, heat requirements were not well defined and the heat input was controlled to heat the inlet air to decrease the relative humidity below 50%. To help determine humidity conditions inside the baghouse, a dew-point hygrometer was installed as shown in Figure 4 and it was assumed the

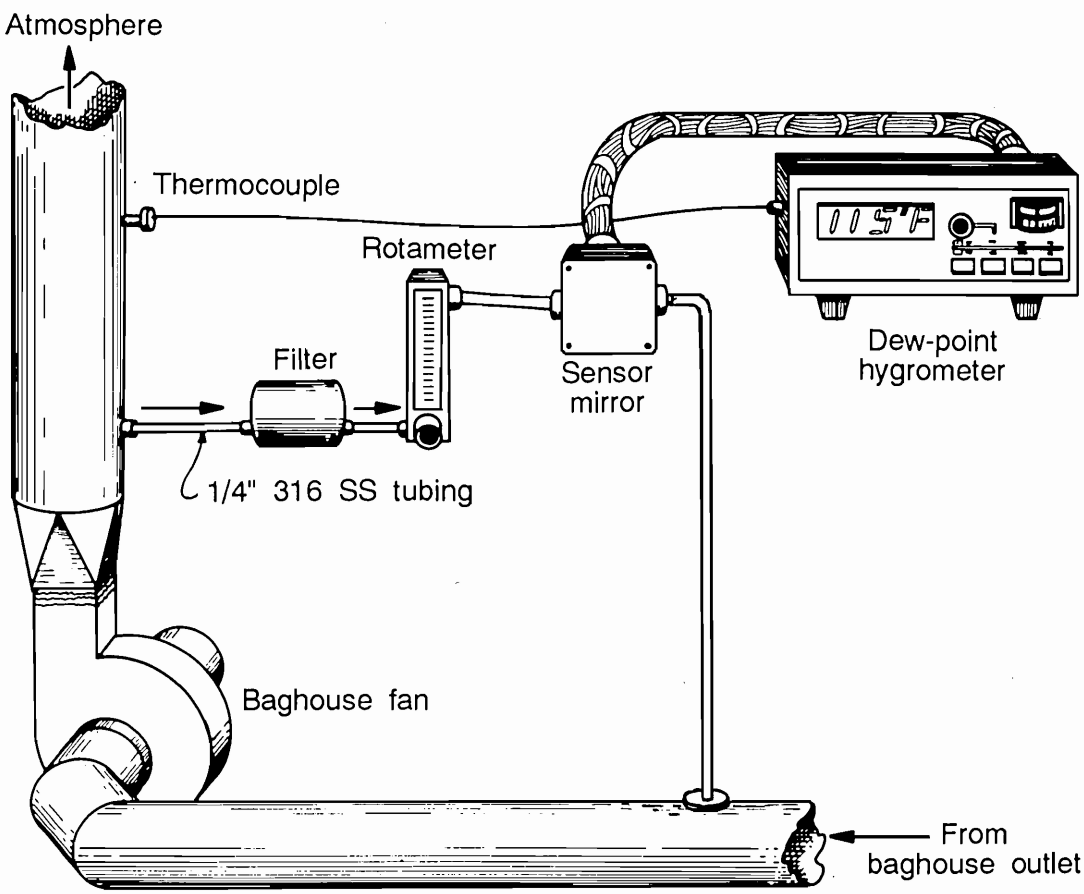

Figure 4. Dew-Point Hygrometer Installation on Pilot-Plant Baghouse.

humidity of the air within the baghouse would be the same as that of the outlet air. The dew-point and dry-bulb temperatures could be monitored continuously by the hygrometer and a thermocouple, respectively, and the relative humidity calculated from charts. In a later improvement, a hygrometer was developed that displayed the relative humidity directly and saved a conversion step. Based on the grade being produced, a maximum relative humidity could be maintained which was below the critical relative humidity of the fertilizer dust. At elevated temperatures existing in a baghouse, the critical relative humidity can be much lower than published values, usually made at 86°F (30°C), so curves or tables with information similar to that in Figure 3 must be developed for the critical relative humidity at temperatures encountered during processing for each fertilizer product tested.

In summary, with a well-designed plant and process, sufficient experience in operating techniques, and appropriate care in protecting product during handling, good quality NP and NPK granular fertilizers can be produced using urea as a supplemental nitrogen source.

References

1. "New Developments in Fertilizer Technology," Tennessee Valley Authority, Special Report S-392, 5th Demonstration, October 1964, Muscle Shoals, Alabama.
2. Misra, N. P., Roychandhury, P. K., and Rathi, S. N., "Small Capacity Granulation Plants–Case Studies," *Fertilizer News 26* (2), 26-33, February 1981.
3. Arunachalam, P. N., Keeshan, F. R., Leyshon, D. W., and Potts, W. E., "Urea-DAP-NPK Granulation." Paper presented at the American Chemical Society Meeting, New York, New York, August 1981.
4. "NPK Fertilizer Production Alternatives," Proceedings, International Workshop Madras/Bombay, India, February 1988, International Fertilizer Development Center.
5. Hemsley, J. D. C., and Ward, N. D., Fisons Limited, F. Roig and J. Torralba, FERTIBERA, S.A., "The Manufacture of Granular Compound Fertilisers Based on Urea as a Principal Source of Nitrogen," Seminar on Recent Advances in Fertiliser Technology (1972)," Proceedings, The Fertiliser Association of India, New Delhi.
6. Hemsley, J. D. C., and Roig, Francisco, "The Manufacture of Granular Compound Fertilizers Based on Urea as the Principal Source of Nitrogen," paper LTE/72/7 presented at ISMA Technical Conference, Seville, Spain (November 1972).
7. "New Developments in Fertilizer Technology," Tennessee Valley Authority, Special Report S-410, 6th Demonstration, October 4-5, 1966, Muscle Shoals, Alabama.
8. "New Developments in Fertilizer Technology," Tennessee Valley Authority, Bulletin No. Y-12, 8th Demonstration, October 6-8, 1970, Muscle Shoals, Alabama.
9. Lee, R. G., Norton, M. M., and Graham, H. G., "Urea-Ammonium Phosphate Production Using the TVA Melt-Type Granulation Process." *Proc. Fert. Ind. Round Table*, 16 pp. (December 1974).
10. McCamy, I. W., Norton, M. M. , and Parker, B. R., "TVA Experience with the Production of Granular NP and NPK Fertilizers Containing Urea." Paper presented at the 29th Annual Meeting of the Fertilizer Industry Round Table, October 30-November 1, 1979, Washington, D.C. (TVA Circular Z-98).
11. "New Developments in Fertilizer Technology," Tennessee Valley Authority, Bulletin Y-81, 10th Demonstration, October 1974, Muscle Shoals, Alabama.
12. Parker, B. R., Norton, M. M., and Stumpe, T. R., "An Update of TVA's Experience in Production of High-Analysis Granular NP and NPK Fertilizers Containing Urea." Paper presented at the 31st Annual Meeting of the Fertilizer Industry Round Table, November 2-4, 1981, Washington, D.C. (TVA Circular Z-139).
13. Salladay, D. G., and Cole, C. A., "Status of NPKS Ammoniation-Granulation Plants and TVA Pipe-Cross Reactor." Paper presented at the Fertilizer Industry Round Table, October 28-30, 1980, Atlanta, Georgia.
14. Hoffmeister, G., Jr., "Physical Properties of Fertilizers and Methods for Measuring Them." Prepared for the Agency for International Development (October 1979) (TVA Bulletin Y-147).
15. "Production of Granular NPKs in Ammonium Phosphate Plants–Some Important Differences," International Fertilizer Development Center, Technical Bulletin T-36, December 1989.

Temperature Control During Agglomeration-Type Granulation

Jorge R. Polo[1]

Abstract

One important variable that needs to be strictly controlled to obtain optimum agglomeration/granulation conditions is the temperature of the material being granulated. The literature on granulation quotes optimum temperature values but, as we shall see, optimum temperature values depend on the type of material being granulated as well as on the equipment being used. No generalization can be made regarding optimum granulation temperature, unless it is being made for a specific material, in a given granulating equipment system. The different parameters that affect the temperature value are discussed.

Relationship Between Solid and Liquid Phases

For agglomeration-type granulation to occur, the solid particles must fit together snugly, which means that the proper proportions of particles of various sizes must be present to fill the voids between other particles. In many instances, clay or other inert materials of fine particle size must be present to give strength to the granules by filling those voids.

The first step in making a compact granule requires mechanical energy (provided by movement of the granulating equipment) to position the particles within the granule, and a liquid which helps coalesce (hold in place) the particles while cementation (usually by crystallization of some of the material solubilized in the liquid phase) takes place. It is important that there is enough liquid material (liquid phase) present to cover all exposed surfaces of the solid particles, in order for the adhesion of particles to be strong enough before cementation takes place. But it is also important to avoid having an excess of liquid phase and thus generating very large granules, which will create processing problems throughout the plant (e.g., insufficient drying, equipment clogging, and the excessive generation of fines during crushing).

1. Senior Project Analyst, International Fertilizer Development Center (IFDC) – United States.

The amount of liquid phase required depends on the total surface area of the solids present; this surface area is a function of the fineness of the particles.

Table 1 shows that the external surface area of a given amount of solid particles increases inversely to the diameter of the particles. In the preparation of this table, it was assumed that the particles are perfectly smooth and perfectly round with a density of 1.3 g/cm^3.

As the temperature of the granulating mass of material increases, some of the solid material becomes solubilized in the liquid present, thus increasing the liquid phase and decreasing the solid phase present. Also, an increase in temperature usually tends to decrease the viscosity of the

Table 1. Relationship Between Particle Size and External Surface Area

Particle Diameter (mm)	Number of Particles in 1 kg of Material	External Surface Area (m^2/kg)
0.010	1,909,900,000,000	600.01
0.025	122,200,000,000	239.94
0.050	15,300,000,000	120.17
0.075	4,530,000,000	80.05
0.10	1,910,000,000	60.00
0.25	122,000,000	23.95
0.50	15,300,000	12.02
0.75	4,530,000	8.01
1.0	1,910,000	6.00
2.5	122,000	2.40
5.0	15,300	1.20
7.5	4,500	0.80
10	1,910	0.60
25	122	0.24
50	15.3	0.12
75	4.53	0.08
100	1.91	0.06
124.07	1.00	0.05

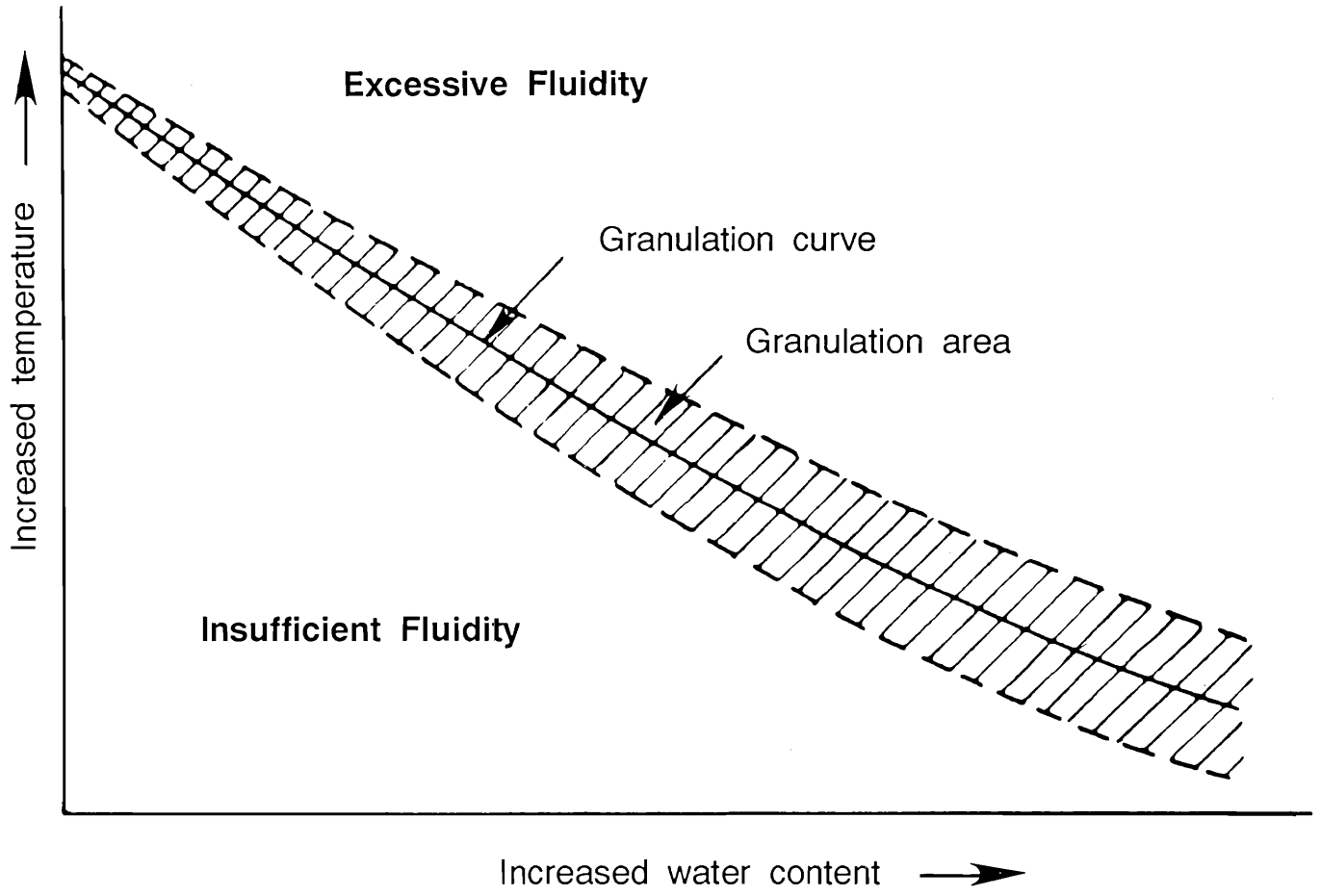

Figure 1. Relationship of Temperature and Water Content to Optimum Granulation.

liquid phase. The net result is that the required amount of liquid phase, for optimum granulation, varies with the temperature of granulation as shown in Figure 1.

There are, however, limits to the temperature for optimum granulation. A system that is too cold will fail to dissolve enough material into the required liquid phase. Therefore, even if the granules are well formed in the granulator, as the water evaporates out of the granule in the dryer, the solid particles will dissociate because there is nothing holding them together. If the temperature is too high, there will be a tendency to overgranulate. Some typical granulation temperatures are shown in Table 2.

Controlling the Temperature During Granulation

It is important at this point to stress the difference between temperature and heat. According to the dictionary, temperature is the degree of hotness or coldness of a body, measured on a definite scale, whereas heat is a form of energy that causes substances to rise in temperature, fuse, evaporate, expand, or undergo various other related

Table 2. Typical Granulation Temperatures for NPK Products

Typical superphosphate-based formulations	80-100°C
Urea-based 17-17-17 using a preneutralizer	74°C
Urea-based 17-17-17-2MgO without use of preneutralizer; reacting 20% of the P_2O_5 (in the form of phosphoric acid) directly in the granulator	53°C
Urea-based 17-17-17-2MgO with no chemical reactions	53°C
Urea-based 14-6-21-4MgO with phosphate rock (no chemical reactions)	52°C

changes. To control temperature, we have to control the heat balance within the granulator. For the temperature to remain constant, the inputs of heat to the granulator must equal the heat output or losses from the granulator.

Heat enters the granulator in one or more of the following ways:

- Sensible heat introduced by the ingredients and steam. This is the heat that is related to the quantity and temperature level of these materials.
- Heat generated by chemical reactions which take place within the granulator. Some reactions are endothermic rather than exothermic; in these cases the heat provided will be negative, reducing the temperature of the granulating mass.
- Latent heat of vaporization for condensing steam. This is the heat liberated by steam when it condenses, which is essentially equivalent to heat that was given to the water to turn it into steam in the first place.
- Heat of crystallization of salts that form. Usually this is a positive value.

Heat leaves the granulator in one or more of the following ways:

- Sensible heat carried by the granulator discharge material and gases that are vented. This is again the heat related to the quantity and temperature level of the materials leaving the granulator.
- Latent heat of vaporization for evaporated water. This is the heat consumed by the water that evaporates and leaves the granulator as steam.
- Sensible heat lost to the environment. This is the heat lost from the granulator by convection, radiation, and conduction.

For granulators of a given geometric configuration and size, the sensible heat lost to the environment will be a function of the temperatures of the granulating mass and the environment. If these temperatures are held at similar values, the losses can be considered to be the same, and constant. Also, the losses of sensible heat carried by the granulator discharge material and vented gases for a given type of granulation operation will be similar at a similar granulating temperature and production rate. Therefore, to maintain a constant temperature in a given granulator where the ingredients are entering at similar quantities and temperatures, it will be necessary to control the other heat input/output variables, which include the heat generated by chemical reactions; the heat of crystallization of salts that form; and the latent heat of vaporization for condensed steam and evaporated water.

If the temperature begins to increase, it will be necessary to perform at least one of the following tasks to maintain the temperature at the desired level.

- Decrease the amount of steam being used.
- Increase the recycle-to-product ratio to cool the granulator.
- Displace some chemical reaction from the granulator to other vessels.
- Replace some of the solubilized or molten salts fed to the granulator with solid material.

If during a granulation operation the temperature begins to decrease, it will be necessary to perform at least one of the following tasks to maintain the temperature at the desired level.

- Increase the amount of steam being used.
- Decrease the recycle-to-product ratio so as not to cool the granulator as much.
- Increase the amount of chemical reactions taking place within the granulator.
- Replace some of the solid material fed to the granulator with solubilized or molten salts. However, the water content of the salt solution must be sufficiently low to avoid cooling.

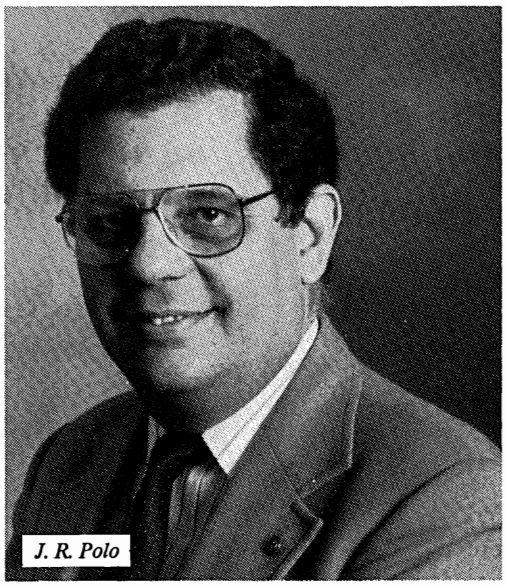
J. R. Polo

The ideal situation comes about when all other sources of heat are balanced and the operator has command over a discretionary amount of steam that can be used to increase or decrease the heat input and therefore temperature. The use of steam is very effective because it also affects the liquid phase and thus is effective in two ways.

The literature on granulation gives values of about 45,000 to 50,000 kilogram-calories per tonne of product as an optimum heat input to a granulator. This value, however, holds more for the superphosphate-based formulations that were prevalent some years ago and for a given type of process used for granulating these formulations. To determine the heat input required for optimum granulation of other types of materials, tests have to be performed using the actual type of granulating equipment. During these tests, different solid particle sizes, liquid-to-solid ratios, and recycle-to-product ratios should be tried, along with different temperatures, to obtain an adequate array of results for analysis. The optimum conditions should consider production capacity, drying requirements, and product quality.

Values to Consider When Calculating Heat Balances

The values shown in Table 3 can be used when calculating the heat generated during the occurrence of typical ammoniation reactions, using either gaseous or liquid ammonia.

For heat calculation purposes, the values shown in Table 4 can be used to determine the amount of ammonia required for common ammoniation reactions.

Other important values useful in heat calculations for urea-based NPK granulation are:

Melting point of urea	132.6°C
Specific heat (molten urea)	0.504 kg-cal/kg/°C
Specific heat (solid urea)	0.41 kg-cal/kg/°C
Heat of crystallization of urea	57.8 kg-cal/kg

Equipment for Performing Chemical Reactions

Tank-Type Preneutralizer

During the early days of granulation, the granulator was sufficient to handle the total heat inputs of the process. Later, with the use of phosphoric acid and the production of more concentrated products, the amount of chemical reactions became too large for the granulator to handle alone. Therefore, it became necessary to use a vessel (tank) for some preneutralization of the acids before feeding them to the granulator. This equipment

Table 3. Heat Released When Reacting Acid Materials With Ammonia

Reaction	Heat Released, kg-cal/kg NH_3 Reacted	
	NH_3 Gas	NH_3 Liquid
Wet-process phosphoric acid (54% P_2O_5) reacted to monoammonium phosphate (MAP)	1,890	1,370
Wet-process phosphoric acid (54% P_2O_5) reacted to diammonium phosphate (DAP)	1,510	990
MAP reacted to DAP	1,130	610
Triple superphosphate (TSP) reacted to ammoniated TSP	1,580	1,060
Single superphosphate (SSP) reacted to ammoniated SSP	1,460	940
Sulfuric acid reacted to ammonium sulfate	2,165	1,645

Table 4. Ammonia Requirements for Common Ammoniation Reactions

Reaction	Weight of Reactant NH_3 Equivalent to
Sulfuric acid to ammonium sulfate	34% of the H_2SO_4 (100% basis)
Phosphoric acid to MAP	24% of the P_2O_5 in the acid
Phosphoric acid to DAP	48% of the P_2O_5 in the acid
Nitric acid to ammonium nitrate	27% of the HNO_3 (100% basis)
Single superphosphate to ammoniated SSP	29% of the P_2O_5 in SSP
Triple superphosphate to ammoniated TSP	19% of the P_2O_5 in TSP

became known as a "preneutralizer." Figure 2 shows the typical positioning of the acid and ammonia distributors (spargers) in a drum granulator while Figure 3 shows how a preneutralizer is installed ahead of the granulator in a typical process for producing ammonium phosphate-type products.

The preneutralizer has been widely used for NPK formulations based on ammonium phosphate, and its use has been very effective in dissipating part of the heat caused by the reaction of phosphoric acid with ammonia. Often, sulfuric acid is also added to the preneutralizer so that mixtures of ammonium sulfate and ammonium phosphate can be generated. The heat of reaction is dissipated in this equipment by evaporation of water. The water that evaporates enters the preneutralizer mostly with the acid, but sometimes extra water is added as required. Although much of the water is evaporated, a substantial amount still remains to form a slurry so that the material can be pumped to the granulator. In addition to controlling the

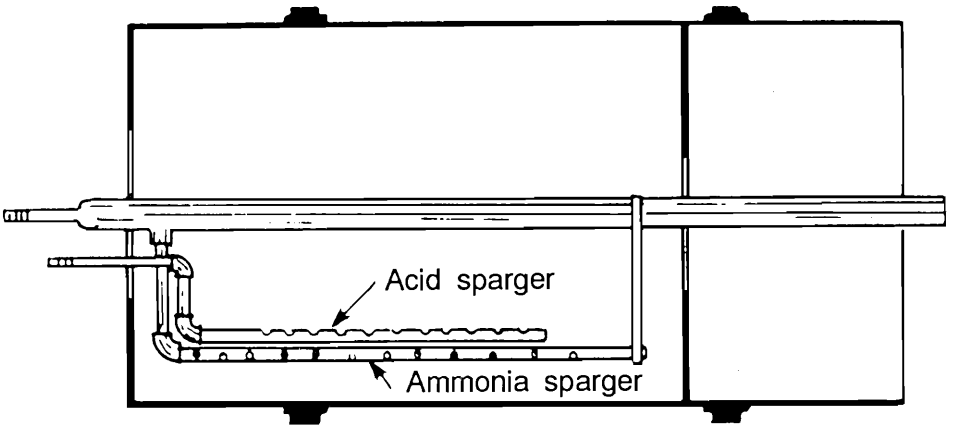

Side View

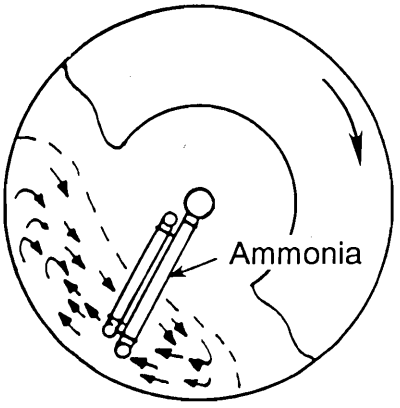

Feed End View

Figure 2. Typical Positioning of Acid and Ammonia Spargers in a Rotary Drum-Type Granulator.

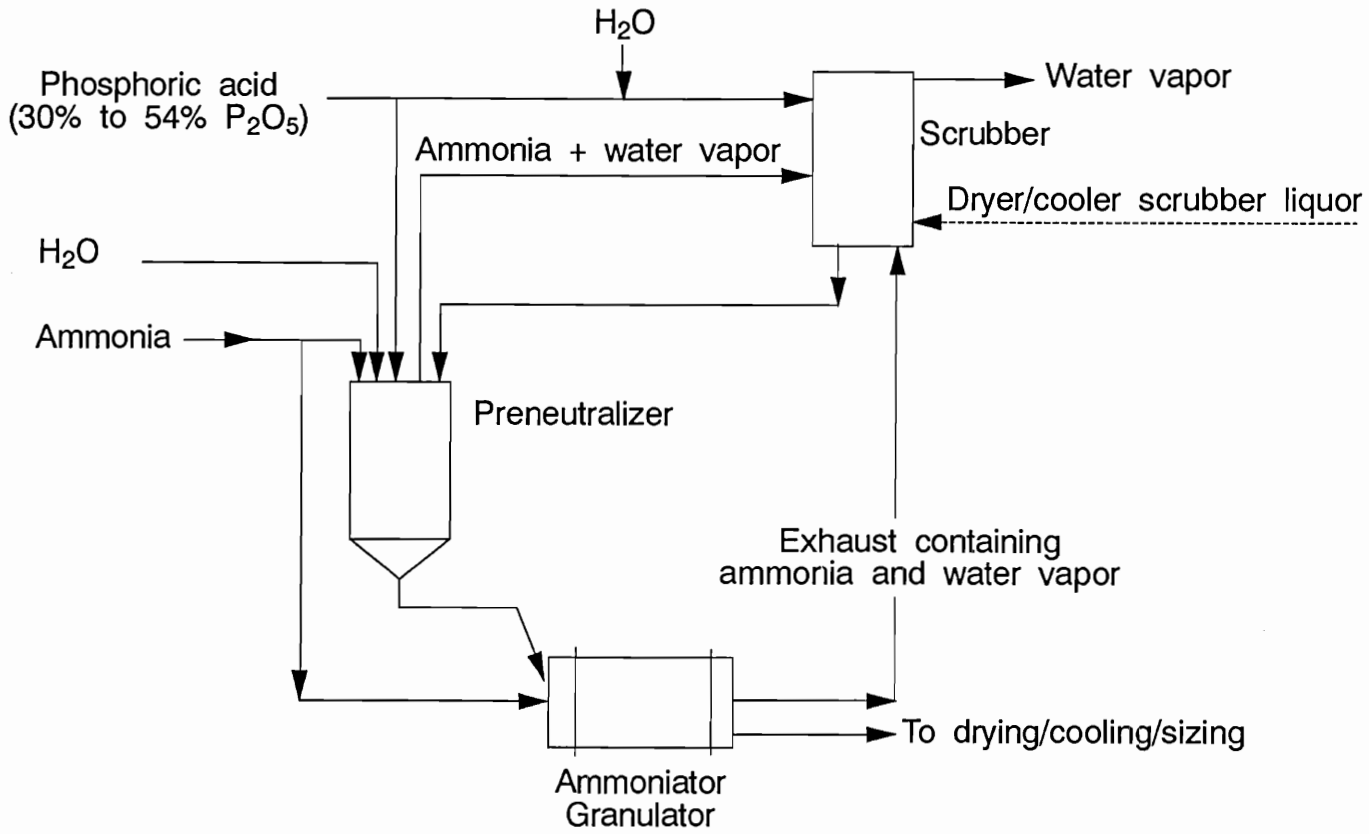

Figure 3. Location of a Tank-Type Preneutralizer in a Typical Granulation Plant.

water present in a preneutralizer, the degree of ammoniation is also critically controlled. The degree of ammoniation (measured by the mole ratio of ammonia to phosphoric acid in the slurry) is controlled to maintain the ratio of ammonium phosphate at a point of highest solubility. The solubility of a mixture of mono- and diammonium phosphates follows a curve with two minimum points as shown in Figure 4. Normally, the ammonia-to-phosphoric acid mole ratio is controlled in a preneutralizer at about 0.4 or 1.5 (values of high solubilities). Then these values are adjusted in the granulator by the addition of extra ammonia (or phosphoric acid) to obtain the desired mole ratio of the end product: about 1 for MAP or 2 for DAP.

Pipe-Type Reactors

Pipe reactors were developed later to be used to perform the functions of a preneutralizer but without the need for as much water to facilitate pumping the slurry. In the pipe reactor, ammonia is reacted with phosphoric acid and often some sulfuric acid in the confined space of the pipe-type reaction tube. The reacted mass is continuously discharged into the granulator. The heat of reaction evaporates much of the water present in the acid and the extra water that is often added to control the temperature within the reactor. This evaporation of water dissipates most of the reaction heat. The material discharged from the pipe reactor is a plastic, hot mass, containing a very small amount of free water. This material granulates together with the rest of the ingredients added to the granulator. Usually, the mole ratio of the material leaving a pipe reactor is close to that of MAP, although some newly designed processes are capable of producing DAP. Some processes use a combination of two pipe reactors operating at different mole ratios, one discharging into the granulator and the other one discharging into the dryer.

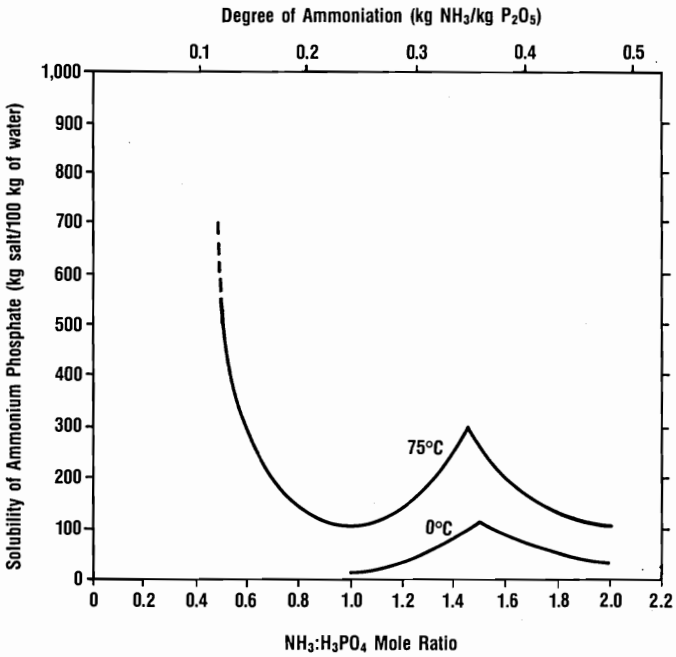

Figure 4. Effect of Mole Ratio on Solubility of Ammonium Phosphate.

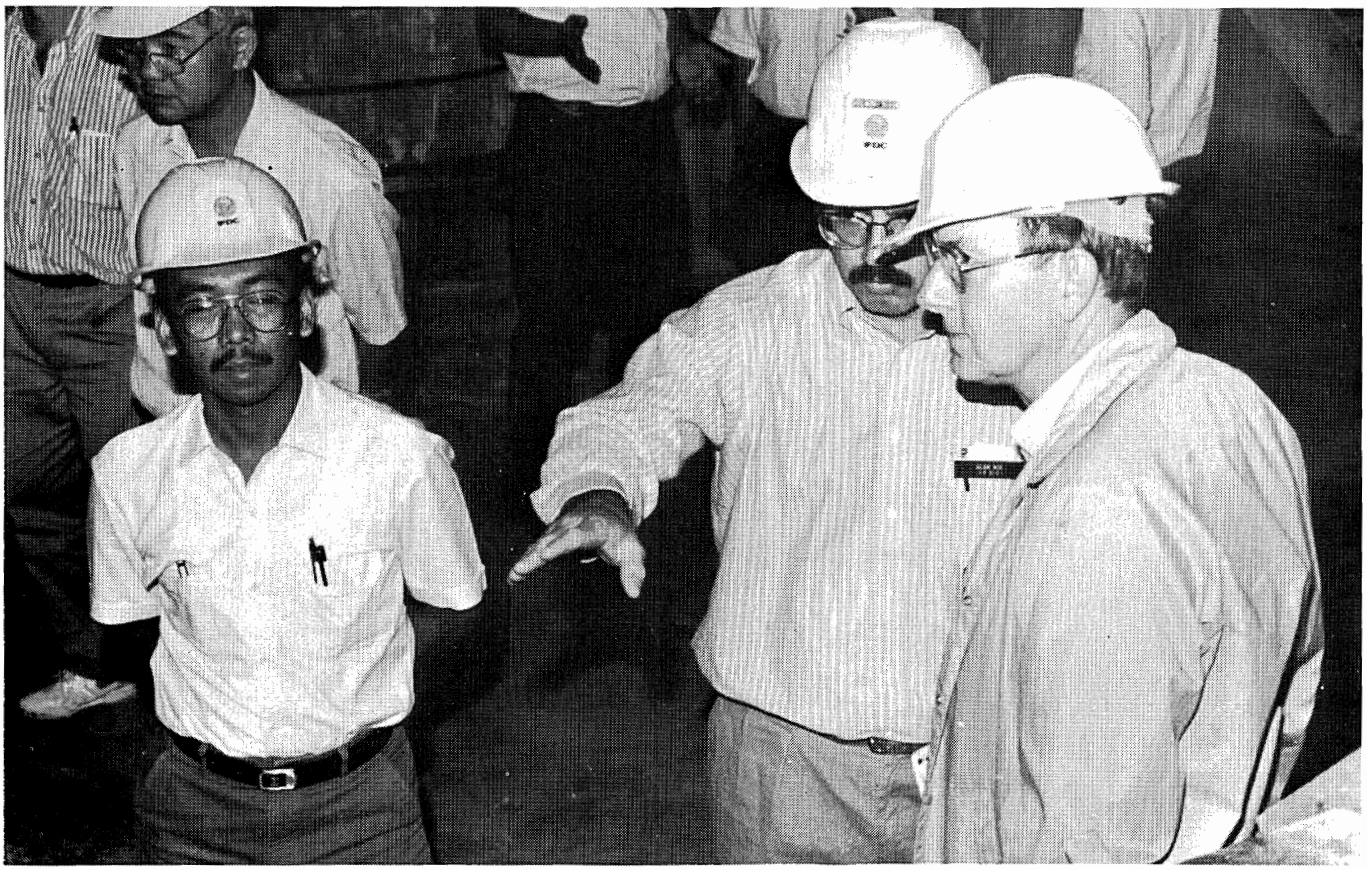

Dehumidification of Production Units and Warehouses

Jorge R. Polo[1]

Abstract

Fertilizers, by nature, are soluble substances. Most of them have a high degree of solubility in water. This high water solubility also carries with it an unwanted property called hygroscopicity. Hygroscopicity can be regarded as the ability of a substance to absorb moisture from the air to form a solution. The more hygroscopic a material is, the more likely it is for that material to present problems in processing, storage, handling, transportation, and application. Unfortunately, urea-based NPKs are very hygroscopic and are therefore prone to serious problems in all phases of production and use. To minimize these problems, efforts have to be made to cope with the hygroscopic behavior of urea-based NPKs.

The degree to which a material exhibits its hygroscopicity is governed by two factors: (1) the nature of the material and (2) the relative humidity of the air in contact with it. Since it is not possible to change the nature of urea-based NPKs, it becomes necessary to reduce the relative humidity of the air to which the material is exposed. This paper will review some of the points that should be considered when selecting a dehumidification system.

Relative Humidity of Air

The amount of water (in the form of vapor) that air can hold varies with temperature. As air is heated, it can hold larger amounts of water before it becomes saturated. This relationship is shown in Table 1.

The property that affects the hygroscopicity of a material is not the amount of moisture that the air holds, but rather how close that air is to becoming saturated. This property is called the "relative humidity" (RH) of the air and is calculated as follows: If air at 22°C contains 19.4 g/m^3 of moisture we say it is saturated, or that its RH is 100% (refer to Table 1). If that air is heated to 28°C, its RH is lowered to 71% (because 19.4 g/m^3 is about 71% of 27.2 g/m^3), and if we heat it to an even higher temperature, say 39°C, its RH is lowered to 40% (19.4 g/m^3 is about 40% of 48.6 g/m^3). In reality these results are not exactly correct because as air is heated its volume also changes (increases slightly) and thus the amount of moisture is lower on a per-m^3 basis; for our discussion, however, this can be disregarded. To obtain more exact results, a psychrometric chart should be used.

Table 1. Moisture Content of Saturated Air at 1 Atmosphere

°C	g/m^3	°C	g/m^3	°C	g/m^3
0	4.85	17	14.45	34	37.55
1	5.20	18	15.35	35	39.55
2	5.57	19	16.30	36	41.65
3	5.95	20	17.30	37	43.90
4	6.35	21	18.35	38	46.20
5	6.80	22	19.40	39	48.60
6	7.25	23	20.55	40	51.21
7	7.75	24	21.75	41	53.86
8	8.25	25	23.05	42	56.61
9	8.80	26	24.35	43	59.51
10	9.40	27	25.75	44	62.53
11	10.00	28	27.20	45	65.52
12	10.65	29	28.75	46	68.61
13	11.35	30	30.35	47	72.00
14	12.05	31	32.05	48	75.56
15	12.80	32	33.80	49	79.24
16	13.60	33	35.60	50	83.05

Source: Lange's Handbook of Chemistry, 13th Ed., 1985.

Critical Relative Humidity of Fertilizers

Fertilizers (and other hygroscopic materials) exhibit what has been defined as a "critical relative humidity" (CRH). CRH can be defined as the RH of the air above which a material absorbs moisture from the air and below which the material releases moisture to the air. A lower CRH implies that the material will absorb moisture from a less humid air, or in other words, that the material will still be hygroscopic at less humid conditions.

The CRH of a fertilizer is dependent on the composition of the fertilizer and on the temperature of the

1. Senior Project Analyst, International Fertilizer Development Center (IFDC) - United States.

fertilizer/air combination. A mixture of materials exhibits a CRH that is lower than the CRH of any of the components; thus, the more components a fertilizer has, the lower its resulting CRH will be. Fertilizers that contain urea as an ingredient usually exhibit a much lower CRH than fertilizers that do not. Table 2 shows the typical CRH (measured at 30°C) for several fertilizer materials, including a urea-based NPK.

Table 2. Critical Relative Humidity for Selected Fertilizers

Fertilizer Material	Grade	Critical Relative Humidity Range at 30°C (%)
Urea	46-0-0	70-75
Ammonium sulfate (AS)	21-0-0	75-85
Ammonium nitrate (AN)	34-0-0	55-65
Diammonium phosphate (DAP)	18-46-0	70-75
Monoammonium phosphate (MAP)	11-55-0	70-80
Triple superphosphate (TSP)	0-46-0	75-85
Potassium chloride (KCl)	0-0-60	70-80
Potassium sulfate	0-0-50	80-85
NPK from AS, DAP, KCl, and sand	10-10-10	65-75
NPK from urea, DAP, KCl, and sand	15-15-15	45-50

Source: IFDC experimental data.

These data show that at 30°C most fertilizer materials have a CRH of around 70% or 80%, and even ammonium nitrate shows a CRH of about 60%. Urea-based NPKs, however, show a CRH of 50% and lower. The effect of urea on the CRH of fertilizers is well known. A mixture of equal parts of urea and ammonium nitrate has a CRH of only 18%, and this is the reason why these two materials should never be used together in a fertilizer formulation, except in the case of fluid fertilizers. Even storage of urea and ammonium nitrate in the same warehouse becomes a problem, and thus this practice should be avoided. A study conducted at IFDC shows that in mixtures of urea, DAP, and KCl, even a small amount of urea caused a marked decrease in the CRH of the mixture (Table 3).

Table 3. Effect of Urea on the Critical Relative Humidity of NPK Mixtures

Portion of Each Ingredient in the Mixture			Critical Relative Humidity Range at 30°C
Urea	DAP	KCl	
(%)			(%)
0.0	50.0	50.0	65-70
2.0	49.0	49.0	55-65
5.0	47.5	47.5	50-60
10.0	45.0	45.0	50-55
15.0	42.5	42.5	45-55
20.0	40.0	40.0	45-50
33.3	33.3	33.3	45-50
40.0	30.0	30.0	45-50
60.0	20.0	20.0	45-50

Source: IFDC experimental data.

Need for Dehumidification

Locations that have ambient RHs higher than that exhibited by urea-based NPKs require air dehumidification in the operating plant and in the warehouse. The material within the operating plant moves rather quickly and is mostly protected from the environment within the processing and conveying equipment, so it does not suffer any appreciable degradation because of its hygroscopicity, even at high RHs. However, the very fine dust that escapes the process and pervades the plant becomes wet within a few hours and creates unsafe situations for the equipment, the electrical system, and the operating personnel if the RH is higher than the CRH of the fertilizer. Dust, because of its high surface area, will be affected by humidity more rapidly than granular material of larger particle size when exposed to an RH only slightly above its CRH. In a bulk-storage warehouse, however, the material remains unprotected for longer periods of time, and if the RH of the air is higher than the CRH of the fertilizer, the material will suffer considerable degradation.

Some materials can withstand absorbed moisture to some degree and will form a surface crust on a pile, which actually prevents moisture from penetrating deeper into the pile. Granular NPKs (especially those prepared by agglomeration) are usually seriously affected by moisture because moisture penetrates through the natural porosity of the granules, damaging their integrity and turning the material into slush.

The tropical areas of the world, where urea-based NPKs are becoming popular, are particularly prone to hygroscopicity problems with these materials because the RH of ambient air at these locations is usually high, especially at night. Table 4 shows the typical RH at a location in Bangladesh. The RH is plotted in Figure 1, along with the CRH of a urea-based NPK, to show the times of the year when problems can be expected at this typical tropical location.

It is advantageous to have only a small amount of bulk urea-based NPK stored in a warehouse. One plant operates very effectively with bulk storage space for about 3 days' production divided among three separate compartments. At any one moment the distribution of fertilizer among these three compartments is as follows: one compartment receives the fresh production from the plant, one compartment is being fed to the bagging system, and one compartment is awaiting the next day's production. This way the material is stored in bags rather than in bulk, and the need for dehumidified air is reduced. It is, of course, important that the bags used provide an effective barrier to moisture penetration, and that the

Table 4. Typical Average Relative Humidity at a Tropical Location[a]

Month	Average Relative Humidity at Noon	Average Relative Humidity at Midnight
	----------(%)----------	
Jan	47.5	81.5
Feb	44.5	77.0
Mar	43.0	72.5
Apr	54.5	77.5
May	57.0	86.0
Jun	78.0	90.5
Jul	79.0	91.5
Aug	78.0	90.3
Sep	77.0	91.2
Oct	69.5	89.0
Nov	55.0	74.5
Dec	52.5	83.5

a. Monthly averages for 1978-80 at Dhaka, Bangladesh.

Source: Bangladesh Meteorological Office.

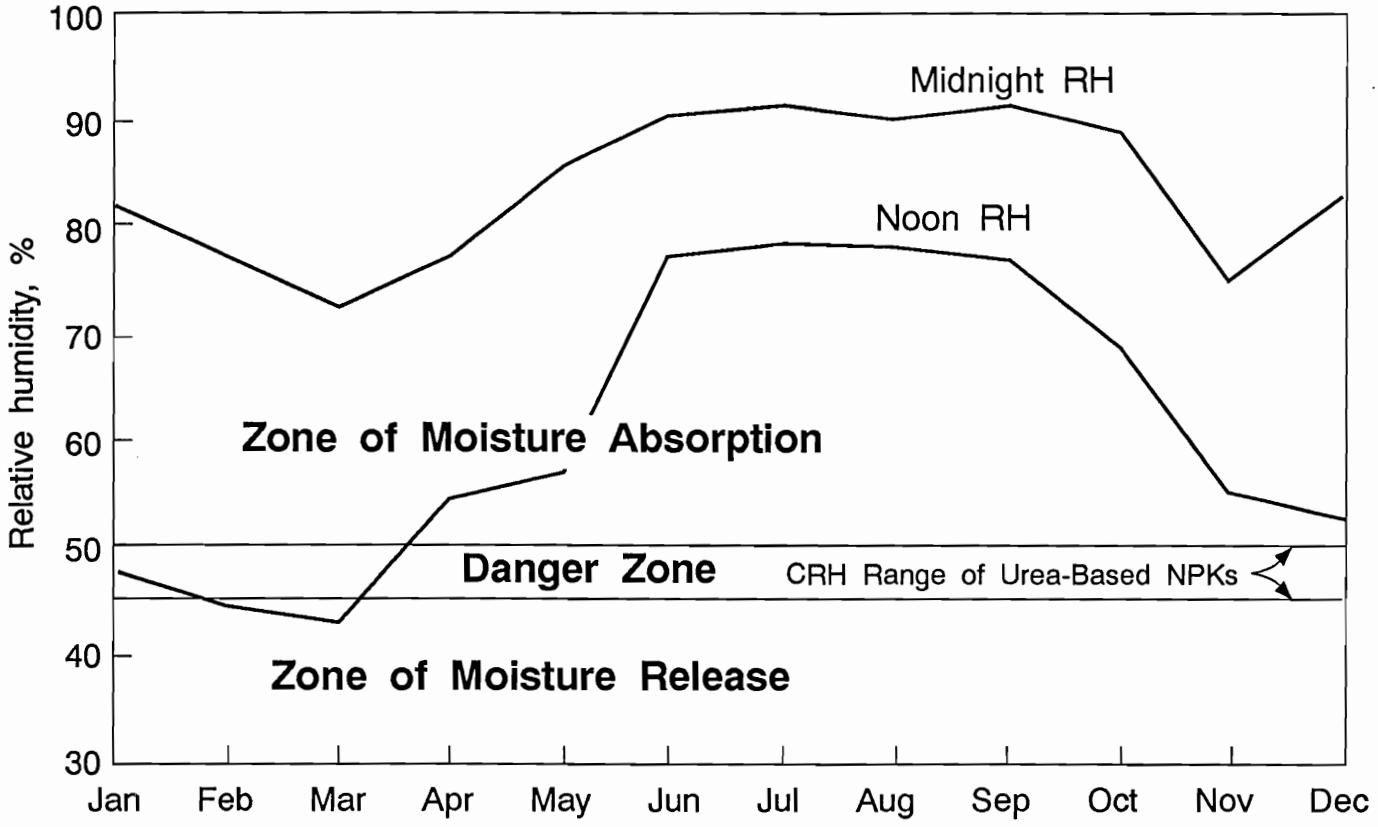

Figure 1. Typical Relative Humidity in a Tropical Location.

material remains in these bags until its use. The same company cited above uses a unique separating system between the storage and bagging areas (Figure 2) to minimize dehumidified air losses. In this separation system, only the bulk fertilizer and the feed chute of the bagging hopper are in the dehumidified environment.

Dehumidification Methods

There are three possible ways to dehumidify air: (1) by raising its temperature to lower its RH, (2) by using an absorbent, and (3) by condensing out the water through cooling.

The first method, raising its temperature, can be used when the required reduction in RH is small. Otherwise, the required heat to be added is too high for the plant working environment. This method, therefore, is usually not applicable to the production of urea-based NPKs in tropical climates. The continuous exposure of personnel to the work environment should always be considered. As an example, let us determine to what temperature we must raise tropical air of 90% RH at 33°C, so that it is below the CRH of urea-based NPK, assuming that to be 45%.

- Moisture content of 33°C air at saturation is 35.6 g/m^3 (Table 1).
- At 90% RH the moisture content is equal to 35.6 x 0.9 or 32.0 g/m^3.
- If this amount (32.0 g/m^3) is to be 45% of the saturation amount of the same air at a new temperature, the saturation amount at the new temperature will be 32.0/0.45 or 71.2 g/m^3.

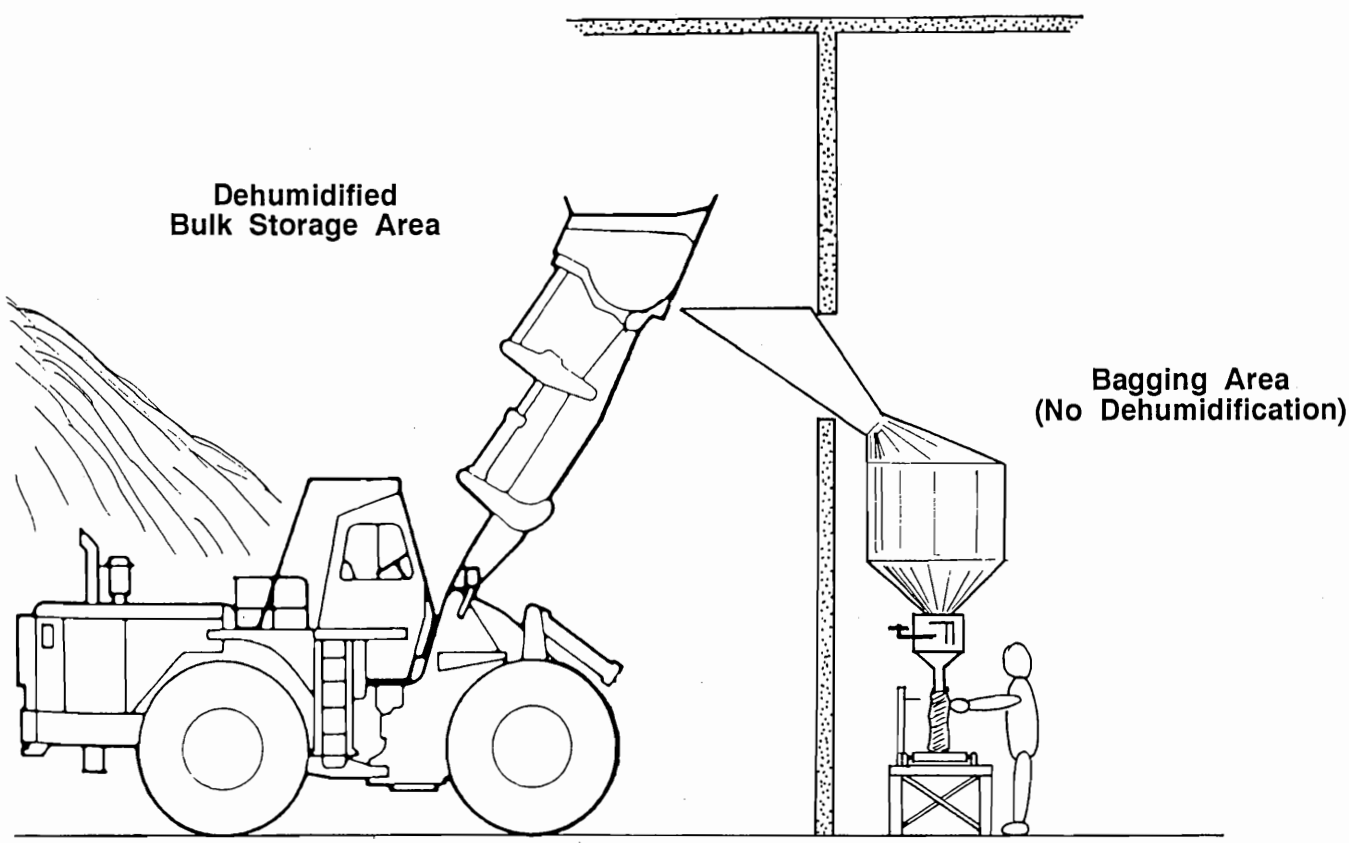

Figure 2. System Used by an Operating Company to Separate Storage (Dehumidified) and Bagging (Not Dehumidified) Areas.

- The temperature of air which is saturated with 71.2 g/m^3 is almost 47°C, so the air would have to be held above 47°C to ensure that its RH would be lower than 45%.

It would be inconceivable to maintain the air temperature above 47°C and expect people to work in such an environment. The relationship between required temperature increases and the resulting reduction of the air RH is shown in Figure 3.

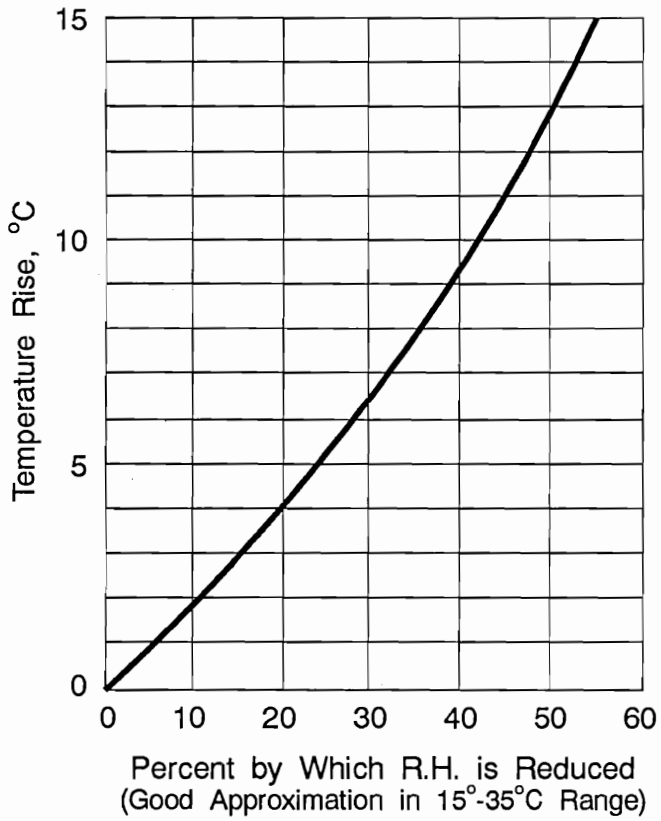

Figure 3. Reduction of Relative Humidity of Air by Heating.

The second method of lowering the relative humidity of air is by using a desiccant. A desiccant will do to the air the same thing a fertilizer with low CRH does: it will absorb the moisture out of the air. In order for this system to work, it must be easy to remove the water from (regenerate) the desiccant in order to use it on a continuous basis. This method of dehumidifying air, although common at the small-scale level, is not widely used to dehumidify large volumes of air such as a processing plant or a warehouse. The regeneration of the desiccant material is usually carried out by heating. One desiccant in use for desiccation of humid air is a solution of lithium chloride, containing an inhibitor. In a typical lithium chloride solution system, air is first filtered and scrubbed clean with water, after which it is passed through the conditioning unit. In the conditioning unit, the clean air is sprayed with a strong solution of lithium chloride that removes moisture. The solution is sent to a regeneration system where the water is driven out by heat and removed with a stream of air. Figure 4 shows a schematic of such a system used in a urea-based NPK fertilizer plant in India.

The third method, removing moisture by cooling the air, is by far the most frequently used method. It is, of course, the same principle used in air conditioning systems. If we use the same example as before, and we need to reduce the RH of 33°C air from 90% to 45%, this would be calculated as follows:

- Moisture content of 33°C air at saturation is 35.6 g/m^3 (Table 1).
- At 90% RH the moisture content is equal to 35.6 x 0.9 or 32.0 g/m^3.
- And at 45% RH it will be equal to 35.6 x 0.45 or 16.0 g/m^3.
- To reduce the moisture content of the air to this amount (16.0 g/m^3), the air will have to be cooled down to about 18°C, the temperature at which the air can only hold this much moisture at the point of saturation. The excess moisture will condense out and will have to be physically removed.
- It is important that the air be reheated back to the original temperature of 33°C or else its RH would be higher than 45% because it is essentially 100% at the temperature of 18°C.

Sometimes, the heat for reheating the air is obtained from the heat generated by the motors, dryer, and other equipment in the plant; in other systems, steam or waste heat from the refrigeration condenser is used for reheating the air.

With any of the three dehumidification methods, recirculation of air is a problem because of fertilizer dust which plugs the system. Although dirty air is filtered in some systems, it is preferable to treat relatively clean outside air and blow it into the plant on a once-through basis.

When cooling is needed, a closed-circuit water loop can be used. Cold water (in many cases mixed with ethylene glycol) at a temperature of about 6°C is typically

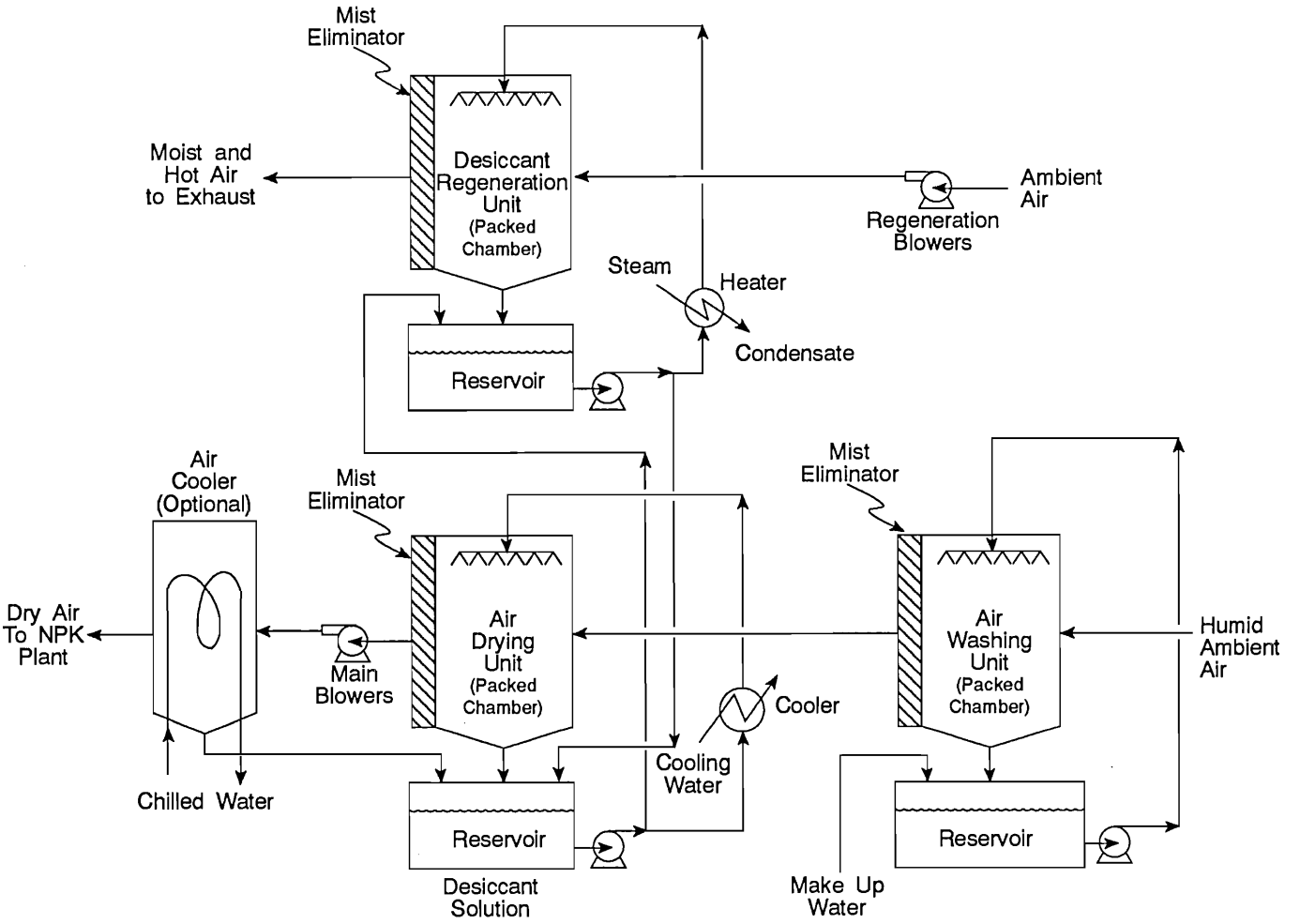

Figure 4. Typical Air Dehumidification System Using a Desiccant Solution.

used. The cooling of the water is achieved either with refrigeration units or by evaporating ammonia in those cases where ammonia is used in the process.

Customarily, the heat exchange between the cold water and air is done through finned tubes. Another possibility, however, is to have direct contact of air with the cold water, which minimizes filter plugging problems but generates fertilizer/dust-laden water that must be purged from the system. This system can be used if the water balance of the process permits the introduction of this purge water into the process or if other facilities are provided to process the purge water.

Typical Commercial Systems

A typical dehumidification system, which is in operation in Malaysia, uses two cooling units of 250 tonnes of refrigeration each to cool water to about 10°C. This water is used to cool an air stream on a once-through basis as it passes through a finned tube-type heat exchanger. For the cool air that is exhausted into the NPK process plant, heat for reheating to lower its RH is obtained from the plant equipment and solar sources. For the air exhausted into the bulk storage building, reheating to about 38°C is obtained with a steam coil-type reheater. The two cooling units are operated on very humid nights and during starting up, but only one unit is normally required for routine operation. Figure 5 shows a schematic diagram of this system. Actual experience has shown that the annual electric power consumption for the dehumidification system (process plant and short-term bulk storage building) amounts to the equivalent of about 15 kWh/tonne of product. Another system used in a plant in India is shown in Figure 6. This system is based on the evaporation of ammonia instead of mechanical refrigeration.

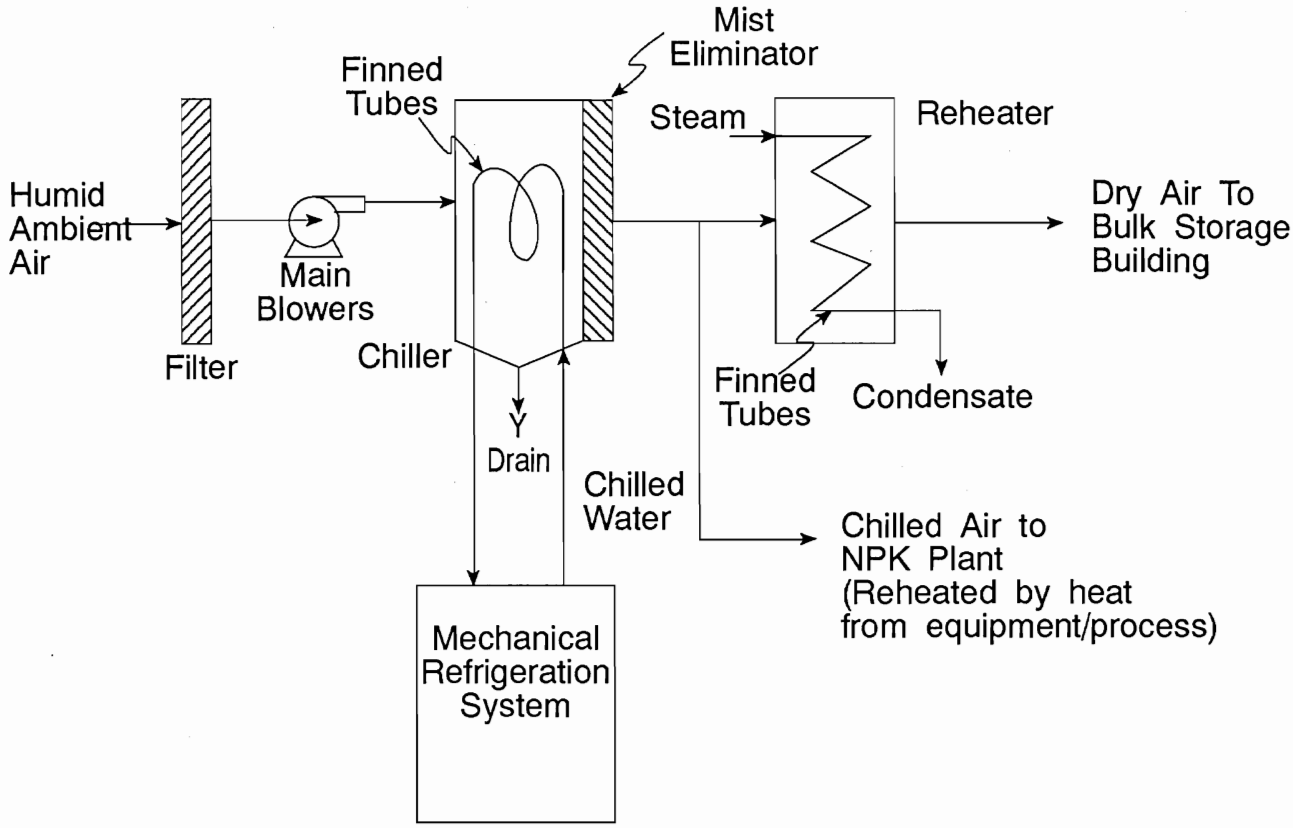

Figure 5. Typical Dehumidification System Using Mechanical Refrigeration.

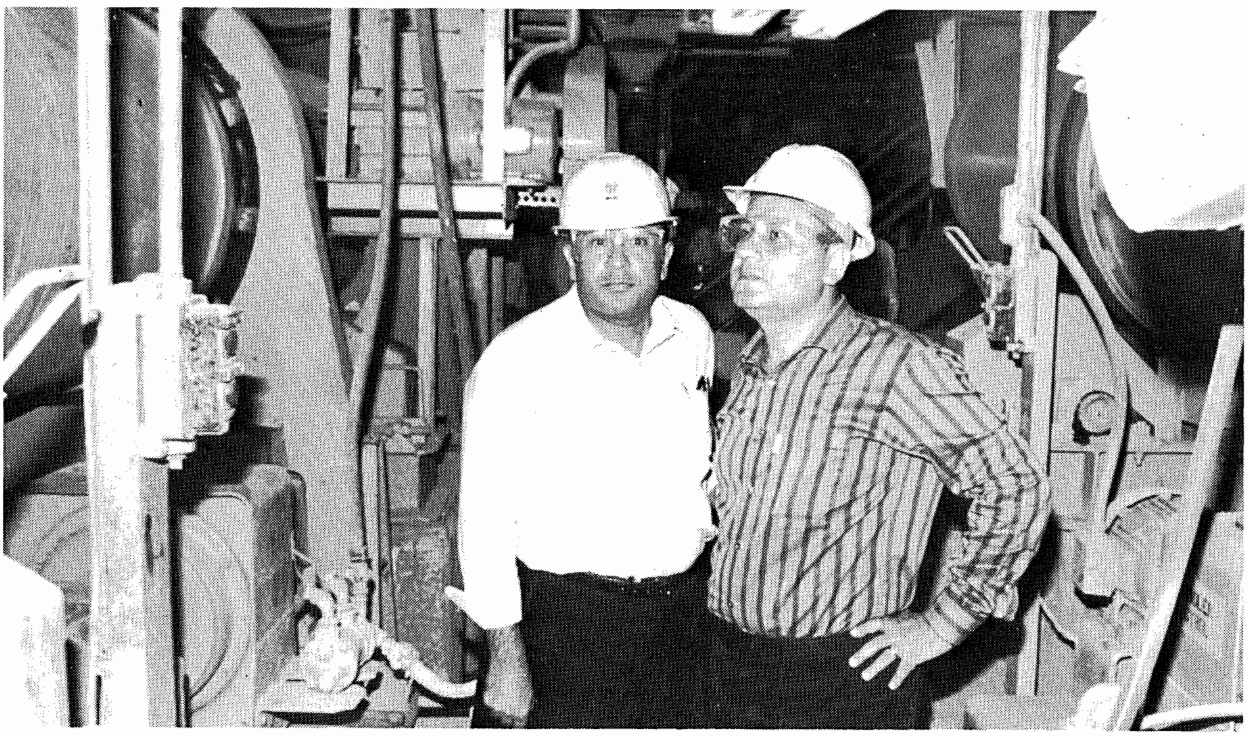

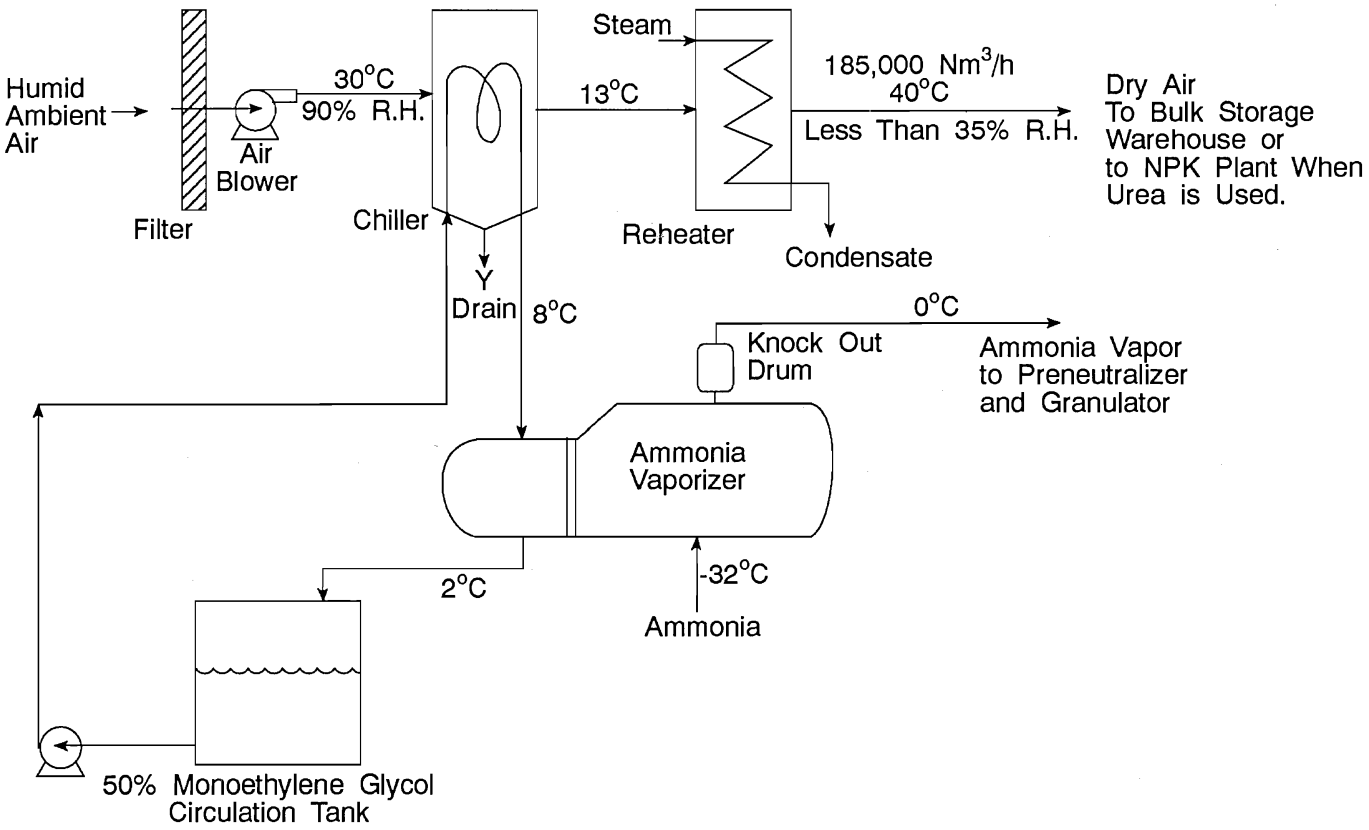

Figure 6. Typical Dehumidification System Using Process Ammonia in the Refrigeration Unit.

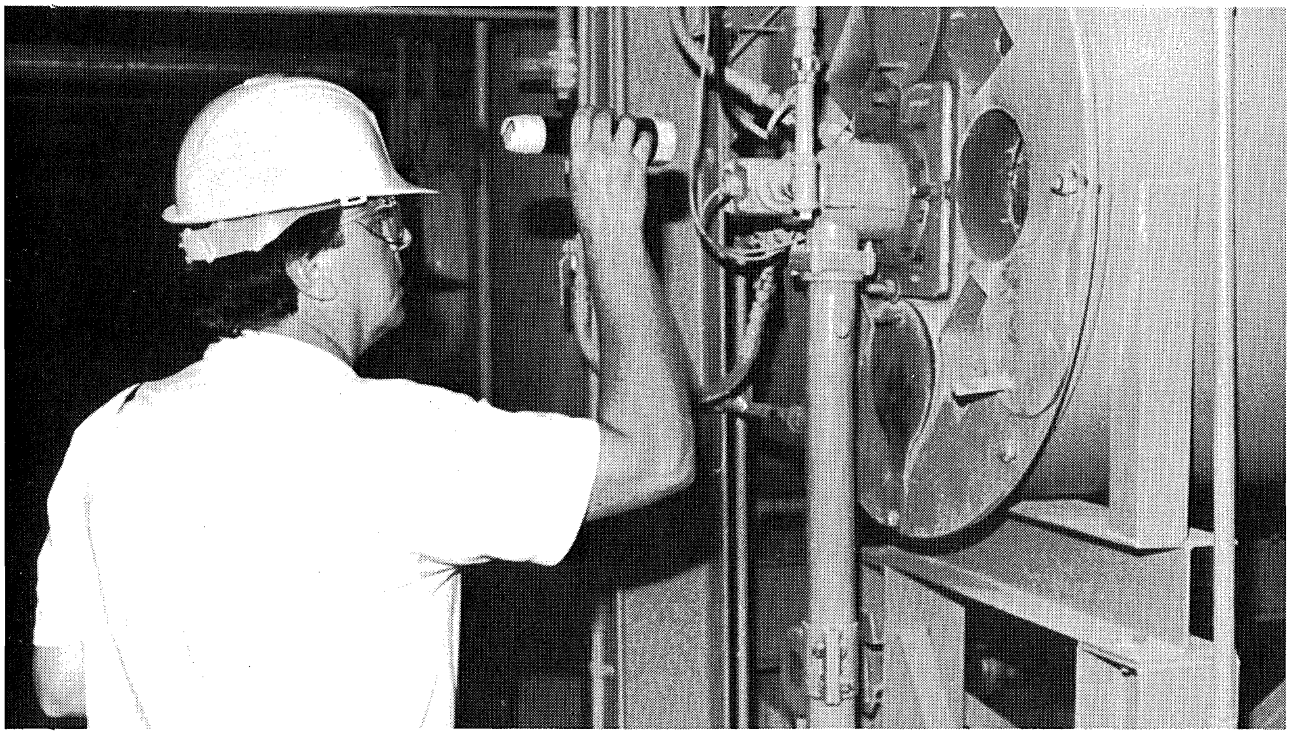

Fertilizer Product Conditioning Agents – Emphasis on NPKs

David W. Rutland[1]

Abstract

This paper addresses the fertilizer manufacturers' responsibility to provide a product with good physical properties, including good flowability and storability, absence of caking, freedom from dust, and reasonable resistance to humidity. Causes and mechanisms of caking are discussed, and various measures for decreasing the caking tendency of fertilizers are outlined.

Introduction

It is the responsibility of the manufacturer to see that the consumer receives a quality fertilizer. A quality fertilizer should meet not only the specified nutrient requirements but also certain "expected" standards of physical quality. Therefore, a fertilizer should be as free flowing, dust free, and nonhygroscopic as possible.

Fertilizers, between the time of production and final application to the soil, must be stored, either in bulk or in bags, for periods that can vary from less than a month to a year or more. During this time it is essential that the materials remain free flowing (noncaked). Unfortunately, many fertilizers, under certain conditions, tend to cake into hard lumps (1).

Causes of Caking

Caking of fertilizer is caused by the formation of contact points between the particles (granules, prills, tablets, briquettes, powder, or crystals). These contact points differ in nature and are usually divided into three types, namely, phase contacts, adhesive contacts, and liquid contacts (2).

Phase contacts (salt bridges) are crystal bridges formed at the contact points between the fertilizer particles. The most troublesome caking in the majority of fertilizers is believed to be caused by crystal bridging. Crystal bridges develop during storage as a result of continuing chemical reactions, dissolution/recrystallization processes, and/or thermal effects.

Adhesive contacts are usually formed as a result of plastic deformation and a bonding force due to capillary adhesion. This type of contact is influenced mostly by the plasticity of the particles and the pressure exerted on the fertilizer material when it is stacked in bags or piled in bulk. This is usually referred to as bag or pile set, and the material normally reverts to a free-flowing form rather easily with a minimal amount of handling.

Liquid contacts are due to considerable wetting of the product, which causes a film of a saturated solution to form between particles. Formation of these types of contact points is defined as "sticking." Although such "sticking" has little strength, it is obviously undesirable because it can lead to salt bridging and hard caking.

Factors Influencing Caking

Caking in fertilizers can be influenced by a number of factors. These factors can be divided into internal factors, related to the physical-chemical constitution of the fertilizer, and external factors, related to the environmental conditions to which the fertilizer is exposed during handling and storage. Many of these factors are interrelated (1,3,4,5).

Internal Factors

The moisture content of the product is usually considered to be the most important factor in promoting caking. For most caking mechanisms, the presence of moisture, in the form of a solution phase, is essential. Generally, the higher the degree of drying at the time of manufacture, the less active the caking mechanisms will be. The extent of drying required to effectively inactivate caking mechanisms varies rather widely with the composition and physical makeup of the fertilizer (4). The general consensus among experts is that the moisture content of urea-based NP and NPK fertilizers should not exceed 1% and preferably should be 0.7% or less.

The chemical composition has an effect on the caking tendency of a fertilizer. For example, it has been shown that the caking tendency of ammonium nitrate-based and

1. Physical Properties Specialist, International Fertilizer Development Center (IFDC) – United States.

urea-based NPK fertilizers is significantly greater than that of ammonium sulfate-based and ammonium phosphate-based NPK fertilizers (6).

The size and shape of the particles are also important. If the particles are relatively large, well formed, and uniform in size and shape with very little fine material, the specific surface area is reduced. Consequently, forces of attraction and points of contact between adjacent particles are decreased, lowering the tendency to cake.

The mechanical strength or hardness of the particles has an effect on the caking tendency. Weak granules may break down under stack or pile pressure (crushing strength) or during handling (abrasion and impact strength). As a result, a substantial quantity of broken particles and fines can be created, thereby increasing the number of contact points between particles.

The hygroscopic properties of the product can have an effect on the degree of caking. All fertilizers have a maximum relative humidity (referred to as the critical relative humidity [CRH]) above which they will absorb moisture. The CRH is a unique property, which is generally lowered by the presence of impurities or by mixture with other fertilizer salts. The CRH of most straight fertilizer salts (urea, ammonium sulfate, diammonium phosphate, triple superphosphate, potash) is usually 70% or higher (at 30°C), whereas the CRH of urea-based NPKs is less than 60% (at 30°C) and often can be as low as 35%-40% if the ambient temperature is high (>40°C). The CRH of a fertilizer product, combined with product temperature, ambient temperature, and atmospheric relative humidity, also influences the transfer of moisture through a mass of fertilizer (bulk or bagged). Transfer of moisture through a fertilizer can cause severe caking problems.

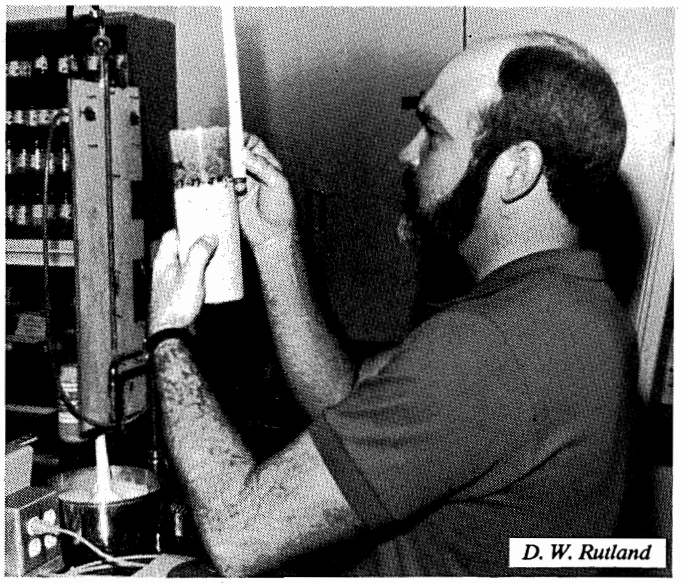
D. W. Rutland

The temperature of the product when placed in storage has an effect on caking tendency. Higher temperatures increase the chemical reactivity and the evaporation and condensation of free water and thus result in recrystallization and formation of solid crystalline bridges. Additionally, a high product temperature can promote particle plasticity causing particle deformation under pressure. Urea-based NPKs are especially prone to deformation of particles. This deformation promotes both crystal bridging and capillary adhesion. Therefore, it is recommended that urea-based NPKs should be cooled prior to storage. However, excessive cooling is not recommended, especially in humid areas, because too much cooling could result in the absorption of atmospheric moisture by the product (7). For urea-based NPKs, a final product temperature for bulk storage of about 40°-45°C is recommended.

External Factors

The warehouse or storage temperature can have an effect on caking tendency in fertilizer. Higher ambient temperatures lower the CRH of a fertilizer material and thereby increase its hygroscopicity. For example, the CRH of a urea-based 17-17-17 is approximately 50% at 30°C, whereas at 45°C it is approximately 40%. Conversely, raising the temperature of existing warehouse air will reduce the relative humidity (RH). This method is employed to lower the warehouse RH below the CRH of the fertilizer.

The humidity of the surrounding atmosphere has an effect on caking. As mentioned previously, when a fertilizer is exposed to a RH above its CRH, absorption of moisture will occur. Saturated solutions will then be formed at the granule surface, promoting capillary adhesion and crystallization processes due to changes in temperature or subsequent evaporation. Here the severity of caking depends mainly on the rate of absorption. The rate of absorption is dependent on factors such as (1) the difference between the RH of the air and the CRH of the fertilizer, (2) the movement of air with a constant RH over the fertilizer, (3) the moisture-holding capacity of the fertilizer as influenced by the granulometry and porosity, and (4) the rate of penetration into the bulk of fertilizer (3).

The length of storage time influences caking. In most cases, the tendency of a fertilizer to cake is highest during the first few weeks after production. However, if a fertilizer has a tendency to cake, in most cases prolonged storage periods will result in a significant increase in caking. Conversely, if a fertilizer does not have a tendency to cake, prolonged storage will usually not result in caking.

The pressure exerted at the bottom of a stack or pile of fertilizer has a definite effect on caking. As with storage

time, if a fertilizer has a tendency to cake, excessive and prolonged pressure will result in a significant increase in caking. Under pressure, particle deformation may occur, resulting in increased contact area. Conversely, if a fertilizer does not have a tendency to cake, excessive and prolonged pressure (within reasonable limits) will usually not result in caking.

Solutions to Caking

The fertilizer industry has adopted various measures to alleviate caking, including the following:

1. The use of various drying processes to obtain a product with a low moisture content.
2. The use of various cooling processes to obtain a product with a low temperature.
3. The use of various granulation, prilling, and pelletizing processes to produce larger particles thereby decreasing the surface area and number of contact points between particles.
4. The use of screening equipment to obtain a more uniform particle size thereby decreasing the surface area and number of contact points between particles.
5. The control of storage conditions such as RH, temperature, pile height, and storage time.
6. Packaging fertilizer products in moisture-resistant bags.
7. The addition of anticaking agents (conditioners).

As indicated, much can be done to decrease the caking tendency by improving both process and storage conditions. However, there is always a practical and economical limit to which the above measures can be used. Thus, in many cases the use of an anticaking agent in combination with process and storage control is the obvious answer to solving most caking problems. However, it should be emphasized here that an anticaking agent **cannot** be used to compensate for poor production and storage practices.

How Anticaking Agents Work

Various modes of action have been suggested to explain how anticaking agents prevent caking. The following mechanisms are commonly cited in the literature (1,2,3,4,5):

1. Preventing saturated solutions on the surfaces of two adjacent particles from coming in contact.
2. Spreading of the crystallizing phase over the particle surface.
3. Nucleation of small crystals during dissolution/recrystallization processes.
4. Modification of crystal makeup/behavior during dissolution/recrystallization processes.
5. Inhibition of dissolution/recrystallization processes.
6. Creation of a hydrophobic barrier on the surface of the particles.
7. Decrease of capillary adhesion between particles.
8. Drying of the granule surface.
9. Decrease in the strength of salt bridges between particles.

The mode of action that prevents caking in a particular fertilizer is determined predominantly by the type of anticaking agent used and to a lesser extent the type of fertilizer being conditioned. In most cases, more than one anticaking mechanism is involved.

Types of Anticaking Agents

An anticaking agent (conditioner) is a material added to a fertilizer to promote the maintenance of good physical condition (flowability) during storage and handling. Conditioners can be divided into two types, namely, (1) coating agents and (2) internal conditioners (1,3,4).

Coating Agents

Coating agents are conditioning materials that are applied uniformly onto the surface of the fertilizer particles. Most coating agents are either very finely divided inert powders that adhere to the particle surfaces or liquids that are sprayed onto the surface. These anticaking agents function by various mechanisms. Inert powders, such as kaolin clays (basic aluminum silicate), diatomaceous earth/kieselguhr (silica), talc (basic magnesium silicate), and chalk (calcium carbonate), function as mechanical barriers between particles and also serve to absorb, spread,

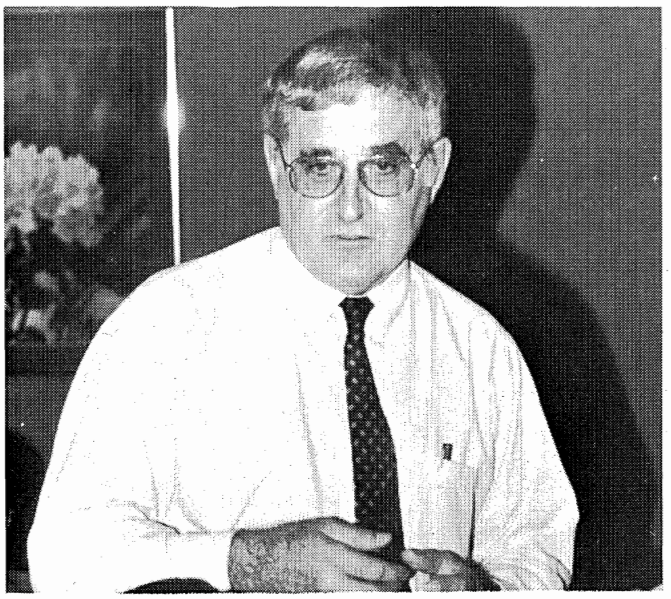

and inactivate any solution phase that may occur on particle surfaces. Where caking bonds do occur, the presence of powder-type anticaking agents usually weakens the bonds; thus, caking is less severe. Liquid coating agents usually function either as crystal modifiers to inhibit or weaken crystal growth on and between the particles or as hydrophobic barriers to inhibit moisture absorption.

Inert Powders–Clay anticaking agents are extremely fine (typically 90% less than 10 μm and 50% less than 1 μm) and thus adhere well to the fertilizer granules. Kaolin clays are widely available, relatively inexpensive, and are usually effective anticaking agents for NP and NPK fertilizers. Usually about 0.5%-1.0% by weight is required; however, this depends heavily upon the characteristics of the NPK fertilizer and the clay (7).

Diatomaceous earth (also referred to as kieselguhr) is coarser than most clays (typically 90% minus 20 μm and 50% minus 3 μm) and thus does not usually adhere to the fertilizer particles as well as clay. However, diatomaceous earth has good absorption properties and is an effective anticaking agent. Diatomaceous earth, talc, and chalk are less widely available than clays, and thus their use is usually localized. The major disadvantages to using inert powders as anticaking agents are their diluting effect on the product analysis and their dustiness.

Adherence of the powder to the NPK fertilizer can often be improved by adding a small amount of an oil or wax-type binder (0.1%-0.3%) and thus reducing dustiness. If an oil-type binder is used, all conveyor belts downstream from the binder addition system should be "oil-proof" to avoid ply separation and failure. Belting made from neoprene or polyvinyl chloride is not severely affected by oil-type binders or other organic-type conditioning agents (7). The use of oil-type binders on nitrate-type NPKs must be approached with caution because of the tendency of organic materials to cause "cigar-burning" and decomposition with certain nitrate-containing fertilizers.

Liquid Coating Agents–These agents include organic surface active agents (surfactants) and nonsurface active agents.

Surfactants function by altering the interfacial tension between a solid and a liquid. Their action as anticaking agents is not clearly understood, and various mechanisms have been proposed, including protection from moisture, spreading of liquid film, modification of crystal makeup/behavior, inhibition of dissolution and crystallization, and modification of bond tensile strength.

Because surfactant molecules comprise a nonpolar hydrophobic (water repellent) group and one or more polar hydrophilic (having a strong affinity for water) groups, they can be subdivided into two classes according to their polar structure: (1) ionic, which can be further classified according to the polarity of the charge carried on the active part of the molecule (anionic if the charge is negative or cationic if the charge is positive), and (2) nonionic, where the molecule is electronically neutral.

The anionic surfactants most commonly employed are sulfonates. It is primarily due to their hydrophobic nature that these anionic surfactants act as anticaking agents.

Cationic surfactants are dominated by the fatty amines, especially those with a long carbon chain like octadecyclamine. Caking is prevented by three different mechanisms–forming a hydrophobic coating on the surface of the particles, and thus improving water repellency; reducing capillary adhesion between particles; and inhibiting nucleation or otherwise modifying crystal growth.

The largest class of nonionic surfactants is the polyoxyethylene condensates, but these have only a moderate effect and are not widely used. Silicone fluids may be considered as nonionic surfactants; although they are used as anticaking agents for many powders, their use on fertilizers is limited due to their high cost.

Nonsurface active coating agents are organic compounds that do not exhibit surface activity but that form a moisture-resistant layer on the surface of the fertilizer particle. Typical nonsurface active coating agents include paraffin wax, synthetic polymers, and oils. They can be used alone or in combination with an inert powder.

A number of companies market liquid coating agents for NPK fertilizer products (8). However, use of these agents seems to be limited, probably because of their relatively high cost.

Internal or Chemical Conditioners

This type of conditioner (anticaking agent) is added to the fertilizer during processing. These conditioners act internally, usually as hardeners or crystal modifiers to improve storage properties. Such an anticaking agent has not been developed for use with NPK products. The multitude of chemical compounds usually present in NPKs would

probably require a mixture of different crystal modifiers to be effective. Internal conditioners are most effective on fertilizers containing predominantly one chemical compound.

A current popular practice in some countries is the inclusion of 0.3%-0.5% of formaldehyde in urea. Calcium lignosulfonate, added in small quantities to urea, effectively hardens/conditions urea as much as formaldehyde does. Another example is the use of magnesium nitrate (about 2%) as an internal conditioner for ammonium nitrate. Also, fertilizer products (diammonium phosphate and monoammonium phosphate) made from wet-process phosphoric acid characteristically contain significant quantities of iron and aluminum phosphate impurities. These impurities serve as effective internal conditioners in these products. The iron and aluminum phosphates are found in the products as amorphous "gels" that harden the products and apparently immobilize the solution phase.

Method of Applying Anticaking Agents

The method used to apply anticaking agents to the fertilizer depends upon the fertilizer material being treated and the anticaking agent being used. The anticaking agents must always be spread uniformly–on the particle surface if the agent used is a coating agent or throughout the fertilizer if it is an internal conditioner. In certain manufacturing processes, the treatment is an integral part of the process, whereas in others the anticaking treatment may be a separate operation.

Coating Agents

Inert powders can be applied to the fertilizer particles by using a rotary coating drum located downstream from the screening and cooling equipment. In some cases the inert powder has been added to the fertilizer in the discharge section of a rotary cooler. This method is less common and generally less effective than employing a separate coating drum.

Liquid coating agents, such as organic surfactants, can be sprayed onto the fertilizer particles as they pass through a rotary coating drum. Other points in the process where liquid coating agents have been added are at the end of the product cooler, on the product belt, and at belt transfer points. Generally, a separate rotary coating drum is more effective in applying a uniform coating of powders or liquid conditioners on fertilizers than any of the other methods.

Internal Conditioners

As previously mentioned, formaldehyde has been used for treatment of urea for many years. In most commercial urea prilling/granulation processes, the formaldehyde addition point is either at the outlet of the second-stage evaporator where the urea concentration is above 98.5% or at the inlet of the second-stage evaporator where the urea concentration is 95% or more.

As mentioned previously, probably the most popular internal conditioner (stabilizing agent) used to prevent particle degradation and caking in ammonium nitrate is magnesium nitrate. The most common method of incorporating magnesium nitrate is to add it to the ammonium nitrate liquor prior to evaporation. In addition to a stabilizing agent, ammonium nitrate usually requires a surface coating to eliminate caking.

Selection of Anticaking Agents

In selecting an appropriate anticaking agent for an NPK fertilizer, the following factors should be considered:

1. Anticaking effect of the agent.
2. Availability of anticaking agent, its cost, and impact on product analysis (dosage required).
3. Method and equipment required for applying the anticaking agent.
4. Environmental and worker safety considerations.

References

1. "Using Anticaking Agents." 1983. *Nitrogen*, 146:21-23, November-December.

2. Kurshinnikov, I. N., and G. F. Chelikidi. 1978. "Methods of Eliminating the Caking of Fertilizers," *Proceedings of the Soviet-Swedish Symposium on the Beneficiation of Phosphate Rock*, p. 180-186, Tallinn, Estonia.

3. Rosenblom, Jan, and Stig Zettervall. 1978. "Anticaking Treatments of Granular Inorganic Salts Such as Phosphate Based Complex Fertilizers and Ammonium Nitrate," *Proceedings of the Soviet-Swedish Symposium on the Beneficiation of Phosphate Rock*, p. 158-179, Tallinn, Estonia.

4. Hoffmeister, George. 1979. *Physical Properties of Fertilizers and Methods for Measuring Them*, Y-147, Tennessee Valley Authority, Muscle Shoals, Alabama, U.S.A.

5. Thompson, D. C. 1972. *Fertiliser Caking and Its Prevention*, Proceedings No. 125, The Fertiliser Society, London, United Kingdom.

6. Rutland, D. W., and J. R. Polo. 1989. "Comparative Properties of Urea-Based NPK Fertilizers," IN *Proceedings of the 39th Annual Meeting*, The Fertilizer Industry Round Table, pp. 159-172, Atlanta, Georgia, U.S.A.

7. Schultz, James J. 1989. *Production of Granular NPKs in Ammonium Phosphate Plants–Some Important Differences*, Technical Bulletin T-36, International Fertilizer Development Center (IFDC), Muscle Shoals, Alabama, U.S.A.

8. Rutland, D. W. 1990. "Fertilizer Caking: Mechanisms, Influential Factors, and Methods of Prevention," Paper presented at the 200th National Meeting of the American Chemical Society, Washington, D.C., U.S.A.

9. Mackay, P. A., and K. S. Sharples. 1985. *The Use of Special Oils and Coatings to Prevent Caking of Fertilisers*, Proceedings No. 239, The Fertiliser Society, London, United Kingdom.

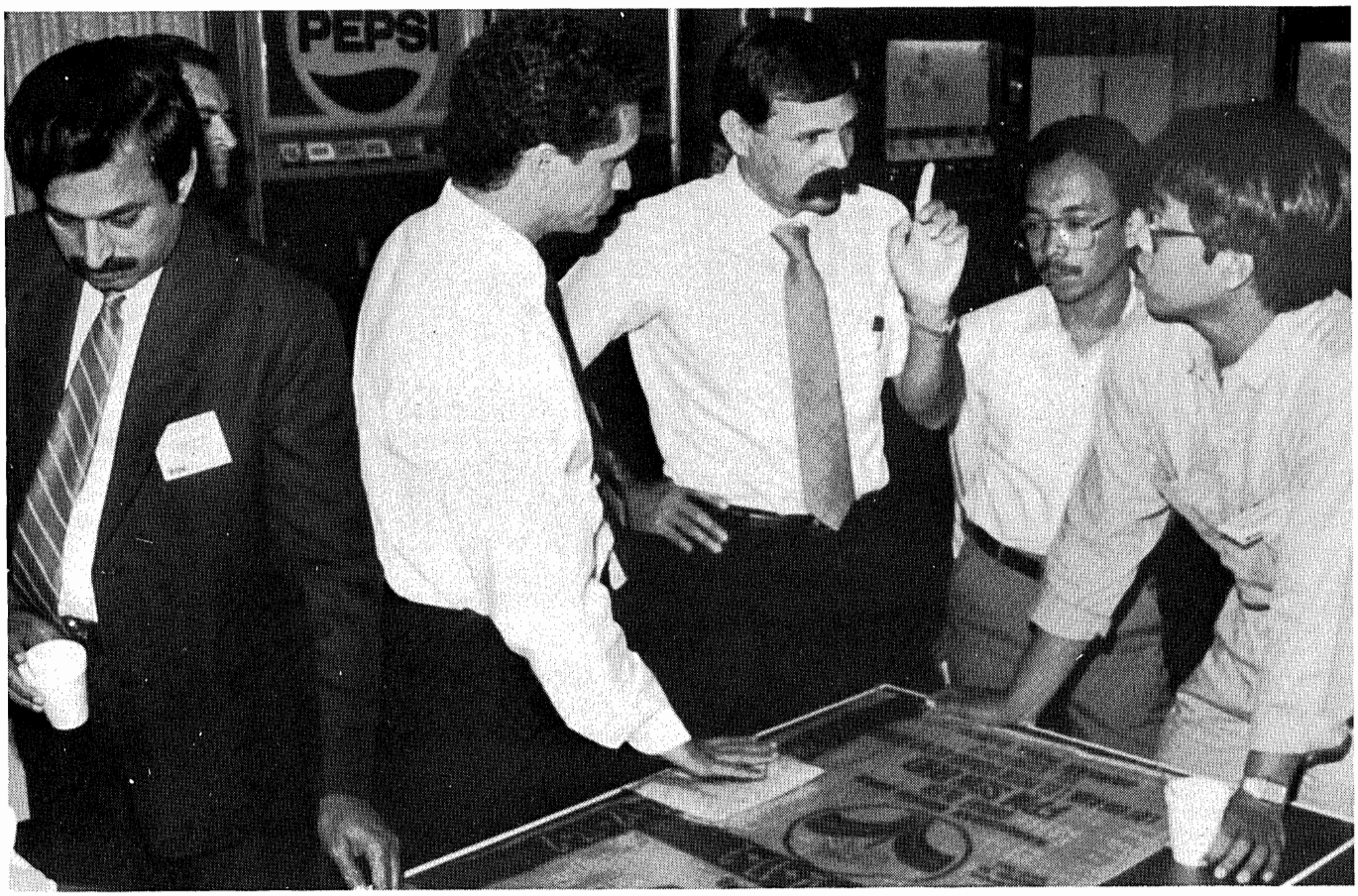

Storage and Handling Characteristics of Urea-Based NPK Fertilizers

David W. Rutland[1]

Abstract

Quantitative data are given to compare the storage and handling characteristics of urea-based NPK fertilizers with those of other fertilizer materials, including non-urea NPKs. In agreement with actual field experience, these data show that incorporation of urea in NP or NPK fertilizers can have quite troublesome effects on the storage and handling properties of the product. The major effect of the presence of urea is a lowering of the critical relative humidity, which increases susceptibility of the product to moisture absorption. Under even moderately humid atmospheric conditions, exposed pile surfaces become wet and flowability during field handling becomes degraded. The data confirm the need for such precautions as dehumidification of production and storage areas and moisture protection during field handling.

Introduction

The quality of a fertilizer product is basically judged by two criteria: (1) chemical properties and (2) physical properties. The chemical properties of a fertilizer (nutrient content, source, and availability to the crop) and their agronomic effectiveness are the ultimate reasons for the use of a fertilizer. Good chemical properties of a fertilizer are ultimately reflected in their agronomic response. In contrast, the physical form of a fertilizer product and its ability to resist deterioration are important with respect to processing, handling, storage, field application, and agronomic response. This paper will focus principally on the storage and handling characteristics of fertilizers, particularly urea-based NPKs.

The physical quality problems most frequently encountered during storage and handling of urea-based NPKs are caking (agglomeration or lump formation), excessive hygroscopicity (moisture absorption and penetration), and to a lesser degree, dustiness and creation of fines.

The presence of urea in solid NPK fertilizers usually has an adverse effect on the storage and handling properties of the product when compared with urea-free NPKs. At the 1977 Fertilizer Industry Round Table Meeting, Hoffmeister and Harrison presented data on the storage properties of various granular urea-based NP and NPK fertilizers (1); at the 1984 Round Table Meeting, Rutland compared the hygroscopic and storage properties of selected blended and granulated NPKs containing urea (2); then, at the 1985 Round Table Meeting, four papers were presented dealing specifically with the granulation of urea-based NPKs (3,4,5,6); and, finally, during the Round Table Meeting of 1989, Rutland and Polo presented data on the hygroscopicity, storage, and process characteristics of various urea-based NPKs (7). All these presentations emphasized the problems that can be encountered in the processing, handling, and storage of urea-based NPKs.

Caking Tendency

A number of factors have an influence on the tendency of a fertilizer to cake. These factors can be divided into internal factors related to the physical-chemical composition of the fertilizer and external factors related to the environmental conditions to which the fertilizer is exposed during storage and handling. Internal factors that affect the tendency of a fertilizer to cake are (1) moisture content; (2) chemical composition; (3) particle size, shape, and structure; (4) mechanical strength; (5) hygroscopic properties; and (6) product temperature. External factors that influence the tendency of a fertilizer to cake are (1) warehouse/storage temperature, (2) humidity of the atmosphere, (3) storage time, (4) storage pressure, and (5) handling techniques (8).

It is difficult to assign a degree of importance to the factors that affect caking tendency, but it is generally perceived that the moisture content of a fertilizer product is the single most important factor affecting caking. For most caking mechanisms, the presence of moisture in the form of soluble salt solution phase is essential. Generally, the higher the degree of drying at the time of manufacture, the less active the caking mechanisms will be. The

1. Physical Properties Specialist, International Fertilizer Development Center (IFDC) – United States.

extent of drying required to effectively inactivate caking mechanisms varies widely with the composition and physical makeup of the fertilizer (9). The general consensus among experts is that the moisture content of urea-based NP and NPK fertilizer should not exceed 1% and preferably should be 0.7% or less. The preferred analytical method for determining moisture content in urea-based NPK fertilizer is a vacuum desiccation procedure. This method measures only free water, which is believed to be the type of water that contributes most to caking (as opposed to water of hydration). The vacuum desiccation drying method is carried out at 25°-30°C; higher temperatures could result in loss of weight due to volatilization of ammoniacal nitrogen. Such a weight loss may erroneously be reported as free water. A major source of error with moisture determinations (especially for urea-based NPK fertilizers, which are very hygroscopic) can be the sample preparation procedure. It is extremely important that the sample be collected, split, and ground as quickly as possible and in an environment low in relative humidity (<40%). If the relative humidity is >50%, it would not be suprising for a urea-based NPK fertilizer sample to absorb as much as 1.0%-1.5% moisture during preparation for analysis, in that the critical relative humidity (CRH) of most urea-based NPKs is 50% or less.

The chemical composition of a fertilizer product also has a very significant effect on its caking tendency. It has been demonstrated that ammonium phosphate- and ammonia sulfate-based NPKs are less prone to caking than ammonium nitrate- and urea-based NPKs (2,7). Table 1 gives some typical caking tendency data of various NP and NPK fertilizer grades.

Hygroscopicity

Hygroscopicity is the tendency of fertilizers to absorb moisture. Most fertilizer products are hygroscopic to some extent because of their normally high water solubility. However, the more hygroscopic a fertilizer is, the more one can expect problems during storage and handling. Factors which normally affect hygroscopicity in fertilizers are (1) chemical composition, (2) moisture content, (3) ambient temperature, (4) relative humidity, (5) particle structure and porosity, (6) exposure time, and (7) particle surface area.

The hygroscopic properties of a fertilizer product can be quantified and qualified by measuring the CRH,

Table 1. Caking Tendency of Some NP and NPK Fertilizer Grades

Grade	Composition	Moisture Content[b]	Caking Tendency (30°C and 0.3 kg/cm² pressure)[a]		
			1 Month	3 Months	6 Months
			- - - (% +12.5-mm lumps/lump hardness[c]) - - -		
10-20-20	Ammonium sulfate/ammonium phosphate-based	0.8	0/-	0/-	0/-
10-10-10	Ammonium sulfate/ammonium phosphate-based	1.3	0/-	0/-	0/-
6-24-24	Ammonium sulfate/ammonium phosphate-based	1.2	0/-	0/-	0/-
28-28-0	Urea-based, unconditioned	1.4	0.1/L	15/M	15/M
28-28-0	Urea-based, conditioned with kaolin clay and oil	1.4	0/-	0/-	0/-
19-19-19	Urea-based, unconditioned	2.3	38/L	44/H	56/H
17-17-17	Urea-based, unconditioned	0.8	30/M	55/M	55/H
17-17-17	Urea-based, conditioned with kaolin clay and oil	0.8	0/-	0/-	0/-

a. Test performed according to IFDC S-106 (small bag) method described in *IFDC Reference Manual R-6*.
b. Determined by vacuum dessication (*Official Methods of Analysis*, 15th Edition [1990], AOAC, 965.08, Method 1).
c. H = hard; M = medium; and L = light.

moisture absorption-penetration characteristics, and flowability during humid exposure (10).

Critical Relative Humidity (CRH)

The CRH of a fertilizer material is defined as the relative humidity of the atmosphere at which the material begins to absorb moisture from the atmosphere and below which it will not absorb atmospheric moisture.

The major factor affecting the CRH of fertilizers is its chemical composition. When urea is present in an NPK formulation, one can expect problems caused by the exaggerated effect that urea has on lowering the CRH of the mixture. One study done by IFDC indicated that as little as 2% urea in a fertilizer formulation can have an adverse effect on the CRH (7). The effect is more pronounced when potash (potassium chloride) is also present in the formulation. The presence of some secondary nutrients, for example, magnesium in the form of magnesium sulfate monohydrate (kieserite), further decreases the CRH of the mixture. For example, at 30°C an ammonium sulfate-based 10-10-10 has a CRH of about 65%-75%, a urea-based 28-28-0 has a CRH of about 55%-65%, a urea-based 19-19-19 with potassium chloride has a CRH of about 50%-60%, and a urea-based 12-12-17-2 MgO with potassium chloride and kieserite has a CRH of about 40%-50%. Table 2 gives some typical CRH values of various fertilizer products.

Temperature also has a very significant impact on the CRH of a fertilizer. For example, a urea-based 17-17-17 mixture has a CRH of about 50% at 30°C, whereas at 45°C it has a CRH of about 40%. Figure 1 illustrates the

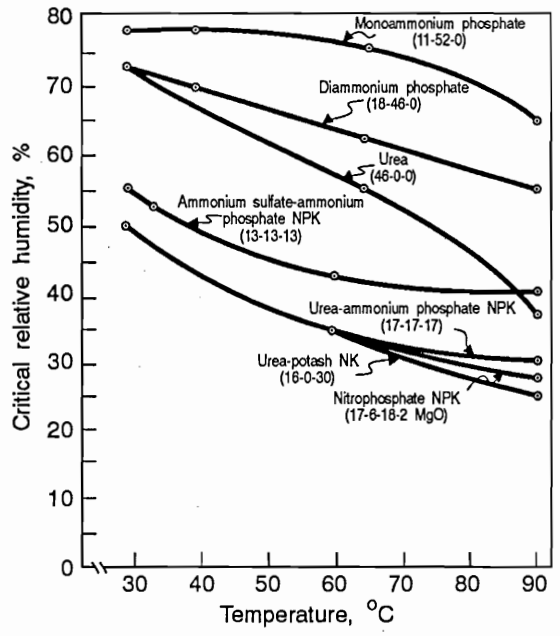

Figure 1. Effect of Temperature on Critical Relative Humidity of Selected Fertilizers.

Table 2. Critical Relative Humidity (CRH) of Some Typical Fertilizer Products

Grade	Composition[a]	CRH (at 30°C)[b]
46-0-0	Urea	70-75
34-0-0	Ammonium nitrate	55-60
21-0-0	Ammonium sulfate	75-85
18-46-0	DAP	70-75
0-46-0	TSP	75-85
0-0-60	KCl	70-80
10-10-10	Ammonium sulfate, ammonium phosphate, KCl, sand	65-75
8-32-16	Ammonium sulfate, ammonium phosphate, KCl, sand	65-75
10-5-18-2MgO	Ammonium sulfate, phosphate rock, KCl, kieserite	60-70
28-28-0	Urea, APP	55-65
20-20-0	Urea, DAP, phosphate rock	50-60
16-0-30	Urea, KCl	45-55
18-18-10	Urea, DAP, phosphate rock, KCl, neem cake, filler	45-55
17-17-17	Urea, ammonium sulfate, DAP, KCl	45-55
19-19-19	Urea, APP, KCl	50-60
15-15-15	Urea, DAP, KCl, sand	45-50
12-12-17-2MgO	Urea, phosphate rock, KCl, kieserite	40-50

a. DAP = diammonium phosphate; TSP = triple superphosphate; KCl = potassium chloride; APP = ammonium polyphosphate.

b. Test performed according to IFDC S-101 (critical relative humidity) method described in *IFDC Reference Manual R-6.*

effect of temperature on the CRH of several typical fertilizers.

Moisture Absorption-Penetration Characteristics

Fertilizers vary in their ability to withstand moisture absorption and moisture penetration (moisture-holding capacity). Even though two fertilizers may have similar CRH values, their moisture-holding capacities may differ significantly. The moisture-holding capacity of a fertilizer material is the amount of moisture that individual particles will absorb before allowing moisture to be transferred by capillary action to adjacent particles. When exposed to relative humidities above its CRH, the factors which most affect the moisture-holding characteristics of a fertilizer are its chemical composition, particle porosity, particle surface area, and degree of crystallinity.

Urea-based NPK fertilizers, because of their high particle porosity and relatively low degree of crystallinity, have fairly high moisture-holding capacities. Most urea-based NPKs can hold 7%-15% moisture by weight. Unfortunately, at this level of moisture, the structure of a urea-based NPK granule collapses into a mud-like mass. The ability to hold a large quantity of moisture usually results in a low level of moisture penetration into the depth of a pile of material. Urea or ammonium nitrate, which have low particle porosity and a high degree of crystallinity, exhibit low moisture-holding capacities, and moisture tends to penetrate deep into storage piles. Table 3 gives some typical moisture absorption-penetration data for various fertilizer products. Test apparatus used to measure moisture penetration is shown in Figure 2.

Flowability During Humid Exposure

Flowability, in this context, is defined as the ability of a fertilizer material to remain free flowing under humid conditions. Flowability is important when considering the movement of fertilizers through the distribution system. As in moisture absorption-penetration characteristics, even though two fertilizers may have similar CRH values, their ability to remain flowable under humid conditions may differ significantly. When exposed to high relative humidities (90% +), the factors which most affect the flowability of a fertilizer are its chemical composition, particle porosity, particle surface area, degree of crystallinity, and ability to absorb moisture as water of hydration.

Table 3. Moisture Absorption-Penetration Characteristics of Some Typical Granular Fertilizer Products

Grade	Composition[b]	Moisture Absorption-Penetration Characteristics[a] (30°C, 80% Relative Humidity for 72 h)			
		Moisture Absorption (mg/cm^2)	Moisture Penetration (cm)	Holding Capacity (%)	Granule Integrity[c]
46-0-0	Urea	350	15	3	Fair-good
21-0-0	Ammonium sulfate	100	0	-	Excellent
18-46-0	DAP	175	2	12	Fair-good
0-46-0	TSP	235	2	12	Excellent
0-0-60	KCl	135	3	5	Good
6-24-24	Ammonium sulfate, ammonium phosphate, KCl, sand	280	2	15	Fair
10-10-10	Ammonium sulfate, ammonium phosphate, KCl, sand	270	4	7	Poor
13-13-13	Ammonium sulfate, ammonium phosphate, KCl, sand	365	4	9	Fair
28-28-0	Urea, APP	370	3	15	Poor
17-17-17	Urea, ammonium sulfate, MAP, KCl	580	6	12	Poor
12-19-9	Urea, phosphate rock, KCl	450	5	8	Poor
15-15-15	Urea, phosphate rock, KCl, sand	490	6	8	Poor
12-12-17-2MgO	Urea, phosphate rock, KCl, kieserite	445	5	7	Poor

a. Test performed according to IFDC S-100 (laboratory absorption-penetration test) method described in *IFDC Reference Manual R-6.*

b. DAP = diammonium phosphate; TSP = triple superphosphate; KCl = potassium chloride; APP = ammonium polyphosphate; MAP = monoammonium phosphate.

c. Granule integrity is a qualitative observation based on the strength of the top layer (surface) of granules after exposure for 72 h.

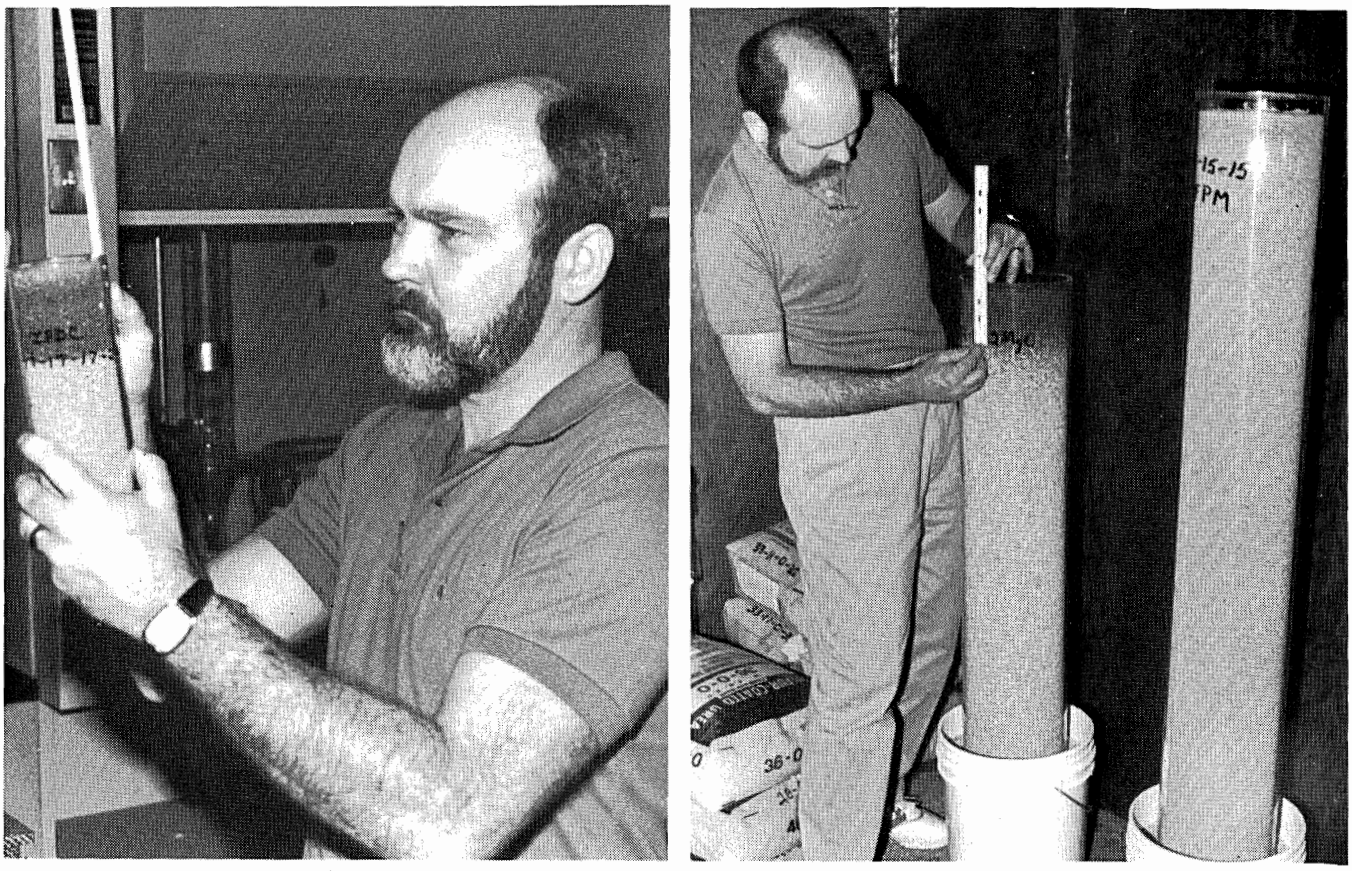

Figure 2. Test Apparatus Used to Measure Moisture Penetration Into Fertilizer Materials Under Controlled Temperature and Relative Humidity Conditions.

The flowability (under humid conditions) of urea-based NPK fertilizer is generally poor, mainly because of two factors. First, the CRH values of urea-based NPK fertilizers are quite low resulting in a very rapid absorption of moisture at high relative humidities. Second, even though urea-based NPK fertilizers have high moisture-holding capacities, this moisture is held mostly as free water, which usually results in the granules becoming quite sticky and mud-like. In contrast, it is believed that products which have good flowability characteristics under humid conditions, such as diammonium phosphate, triple superphosphate, and magnesium sulfate (anhydrous or kieserite), absorb a great deal of moisture as water of hydration and must become essentially fully hydrated before free water begins to make the product sticky and nonflowable. Table 4 gives some typical flowability data for various fertilizer products.

Granule Hardness

Granular fertilizers should have sufficient mechanical strength to withstand normal handling and storage without significant degradation. In fertilizer products, there are normally three types of mechanical strength considered:

Table 4. Flowability (During Humid Exposure) of Some Typical Granular Fertilizer Products

Grade	Composition[b]	Flowability (Minutes at 30°C and 90% RH)[a]		
		25% Nonflowable	50% Nonflowable	75% Nonflowable
46-0-0	Urea	5	10	15
34-0-0	Ammonium nitrate	7	12	16
21-0-0	Ammonium sulfate	175	220	280
18-46-0	DAP	70	130	180
0-46-0	TSP	180	240	300
6-24-24	Ammonium sulfate, ammonium phosphate, KCl, sand	155	175	205
10-10-10	Ammonium sulfate, ammonium phosphate, KCl, sand	75	90	105
19-19-19	Urea, APP, KCl	10	20	30
12-6-22-3MgO	Urea, phosphate rock, KCl, kieserite	31	38	40

a. Test performed according to IFDC S-102 (flowability) method described in *IFDC Reference Manual R-6.*
b. DAP = diammonium phosphate; TSP = triple superphosphate; KCl = potassium chloride; APP = ammonium polyphosphate.

(1) granule crushing strength is a measure of the resistance of an individual granule to deformation or fracture under pressure, (2) abrasion resistance is the resistance of the materials to formation of dust and fines as a result of granule-to-granule and granule-to-equipment contact, and (3) impact resistance is the resistance of granules to breakage upon impact against a hard surface.

Mechanical weakness of a fertilizer product can result not only in material losses due to excessive dust and fines but also complaints among workers and customers about excessive dust. Additionally, mechanically weak fertilizers usually promote increased caking and hygroscopicity as a result of increased particle surface contact area.

The mechanical strength of urea-based NPKs varies widely depending upon their chemical composition, method of production, granule porosity, granule structure, granule shape, granule size, surface crystals, binder, and moisture content. Table 5 gives some typical granule hardness data for various fertilizer products.

Conclusions

The data accumulated by laboratory evaluations, together with empirical data gathered from industry experience, clearly indicate that the presence of urea in a fertilizer mixture can be quite troublesome in regard to its influence on the storage and handling properties of a fertilizer.

The data and information presented in this paper are intended to help quantify the impact of urea and assist those involved in the manufacture, storage, and handling of urea-based NPK fertilizers.

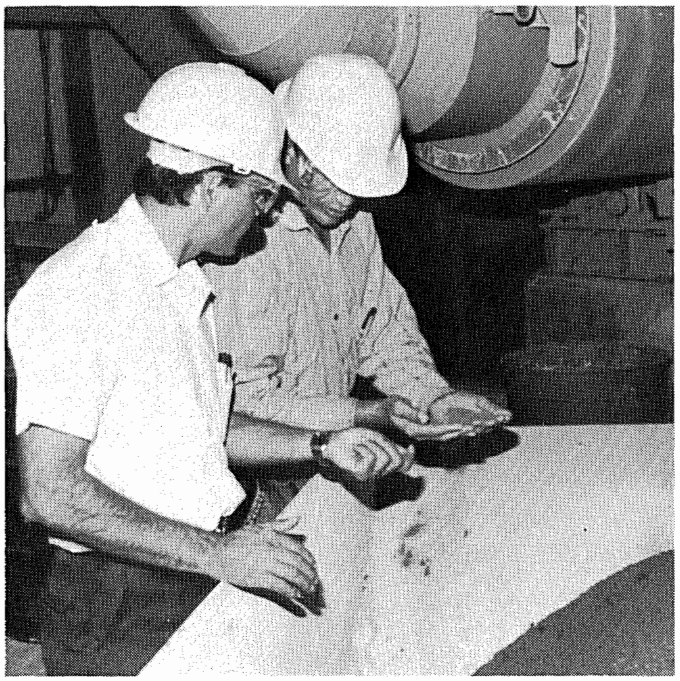

Table 5. Granule Hardness of Some Typical Granular Fertilizer Products[a]

Grade	Composition[b]	Typical Crushing Strength[c,d] (kg/granule)	Typical Abrasion Resistance[d] (% degradation)	Typical Impact Resistance[d] (% shattered granules)
46-0-0	Urea (granular)	1.5-3.5	0.2-3.0	0.1-1.0
46-0-0	Urea (prilled)	0.8-1.2	10-30	5-15
18-46-0	DAP	3.0-5.0	0.5-2.0	0.5-1.5
0-46-0	TSP (accretion process)	4.5-8.0	0-1.0	0-1.0
0-46-0	TSP (agglomeration of run-of-pile TSP)	2.5-3.0	1.0-5.0	-[e]
0-0-60	KCl (granular)	3.0-4.0	2.0-5.0	2.0-5.0
14-6-21-4MgO	Urea, phosphate rock, KCl, kieserite	2.0-4.0	-[e]	-[e]
12-19-9	Urea, phosphate rock, KCl	2.5-3.0	-[e]	-[e]
17-17-17	Urea, ammonium sulfate, MAP, KCl	2.0-3.0	-[e]	-[e]
15-15-15	Urea, DAP, KCl, sand	1.0-3.0	-[e]	-[e]

a. All tests performed according to procedure described in *IFDC Reference Manual R-6*.
b. DAP = diammonium phosphate; TSP = triple superphosphate; KCl = potassium chloride; MAP = monoammonium phosphate.
c. Test performed on 2.36- to 2.80-mm granule size.
d. These values are shown as examples only; values can vary considerably depending upon moisture content, degree of aging, granule shape, porosity, composition, and other specific factors.
e. No data.

References

1. Hoffmeister, G., and C. P. Harrison. 1977. "Physical Properties of Granular Urea-Based NP and NPK Fertilizers," IN *Proceedings of the 27th Annual Meeting, The Fertilizer Industry Round Table*, pp. 162-170, Washington, D.C.
2. Rutland, D. W. 1984. "Comparison of Hygroscopic Properties of Mixtures of Granular Materials (Bulk Blends) and Granulated Mixtures," IN *Proceedings of the 34th Annual Meeting, The Fertilizer Industry Round Table*, pp. 89-98, Baltimore, Maryland.
3. Sisto, A., and A. Escalante. 1985. "Granulation of Urea Based NPK," IN *Proceedings of the 35th Annual Meeting, The Fertilizer Industry Round Table*, pp. 72-77, Atlanta, Georgia.
4. Edson, R. W. 1985. "Production of Granular Urea Ammonium Phosphate Sulfate," IN *Proceedings of the 35th Annual Meeting, The Fertilizer Industry Round Table*, pp. 78-81, Atlanta, Georgia.
5. Schultz, J. J., and M. Salleh Bin Darus. 1985. "Implementation of Urea-Based NPK Granulation Plant in Malaysia," IN *Proceedings of the 35th Annual Meeting, The Fertilizer Industry Round Table*, pp. 82-90, Atlanta, Georgia.
6. Vasani, J. S., and D. W. Leyshon. 1985. "Manufacture of Urea-DAP Based NPK Products in Developing Countries," IN *Proceedings of the 35th Annual Meeting, Fertilizer Industry Round Table*, pp. 91-101, Atlanta, Georgia.
7. Rutland, D. W., and J. R. Polo. 1989. "Comparative Properties of Urea-Based NPK Fertilizers," IN *Proceedings of the 39th Annual Meeting, The Fertilizer Industry Round Table*, pp. 159-172, Atlanta, Georgia.
8. Rutland, D. W. 1990. "Fertilizer Caking: Mechanisms, Influential Factors, and Methods of Prevention," Paper presented at the 200th National Meeting of the American Chemical Society, Washington, D.C.
9. Hoffmeister, G. 1979. *Physical Properties of Fertilizers and Methods for Measuring Them*, TVA Bulletin Y-147, Tennessee Valley Authority, NFDC, Muscle Shoals, Alabama.
10. Rutland, D. W. 1986. *Manual for Determining Physical Properties of Fertilizer*, Reference Manual IFDC-R-6, International Fertilizer Development Center, Muscle Shoals, Alabama.

Granulation of Fertilizers by Compaction[1]

Wolfgang Pietsch[2]

Abstract

For more than 30 years, granulation of potash by compaction has been an accepted method for the manufacture of granular products with tight quality specifications. It is being used by the majority of potash producers worldwide. A review of the technique and the most commonly used equipment reveals that granulation of dry materials by compaction, crushing, and screening is even better suited for mixed fertilizers than for potash.

The particular advantages of the technology are its flexibility due to the possibility to easily and quickly change over and adapt the process to new product formulations, the economic operation of systems of any size even with small capacities, and improved housekeeping as well as maintenance due to the handling of dry components.

The importance of this technology for developing countries is being demonstrated by the successful operation of a plant in Guatemala (1,2,3,4,5). The freedom to select raw materials from any of a large number of different sources on the free market makes it feasible to take advantage of special offers and thus optimize the company's cost structure. It is also possible to use otherwise marginally or not suitable raw materials offering special agronomic characteristics, including the incorporation of micronutrients. Furthermore, it is feasible to closely work with individual farmers and formulate fertilizers for their particular crops, soils, and climatic conditions. To accomplish the latter, small batches of special granular fertilizer can be produced without difficulties. Actual operating data show that in plants, like the one in Guatemala, production runs of as short as 1 hour duration may occur and that during a "typical" day, three or more different formulations will be manufactured for specific customers. This exceptional versatility is most interesting for tropical and semitropical agricultural zones where many different crops are planted within relatively small areas.

1. This paper was originally presented at an IFDC workshop entitled "Supplying Quality Multinutrient Fertilizers in the Latin American and Caribbean Region – Emphasizing Bulk Blending and the Complementary Role of Granulation," October 10-13, 1989, Guatemala City, Guatemala.

2. President, KOPPERN Equipment, Inc. – United States.

Introduction

Shortly after Justus von Liebig postulated the need for fertilization of plants with the basic nutrients, i.e., nitrogen (N), phosphorus (P), and potassium (K), it was determined that if solid fertilizer materials are being applied, the availability of these elements depends to a large extent on solubility. In most cases, the high solubility desired requires a large surface area, which is synonymous with small particle size. It was also found that, additionally, micronutrients are necessary and, because of the small amount of these trace elements in a fertilizer formulation, they had to be added as fine powders.

Such powder systems exhibit a number of problems, including the following:

- Uniform mixing of the components is difficult and time consuming.
- Dusting is pronounced during handling.
- Segregation of components occurs because of differences in particle size and/or density.
- Danger of caking exists during storage and transportation.
- Difficulties prevail during application (dusting, which may result in health hazards, runoff with water, and scattering by wind).

Therefore, it is not surprising that granulation of the powders by size enlargement has been looked at from almost the very beginning of fertilizer technology.

In the early 1950s, pressure agglomeration emerged as an alternative to the already "conventional" tumble agglomeration methods in mixers, drums, pans, and suspended solids granulators. This technology (pressure agglomeration) uses roller presses which can be easily adapted to a wide range of capacities and materials (6,7,8,9,10,11).

Roller Presses

Although the principle of roller presses is simple (Figure 1), modern machines are quite sophisticated (Figure 2). To maximize availability and minimize potential problems caused by insufficient routine maintenance, the machines are equipped with water cooling

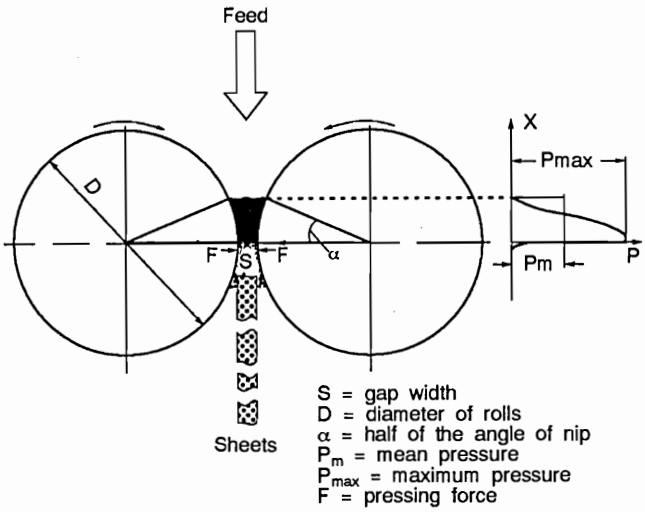

Figure 1. Schematic Representation of the Basic Principle of Roll Pressing.

and automatic grease lubrication. Double output-shaft gear reducers provide for completely enclosed, dust-tight drives connected with the rollers by gear-tooth couplings and spacers, which allow transmittal of full torque even at relatively high misalignment caused by movement of the floating roller. For machines with high torque requirement, the oil of the gear reducers is continuously circulated, filtered, and cooled, and the gear-tooth couplings may be equipped optionally with continuous greasing to guarantee long life.

The machine shown in Figure 2 is equipped with self-aligning roller bearings, optimally sized steel bearing blocks, and an automatic hydraulic pressurizing system with proprietary functions and hydraulic accumulators. The latter allows adjustment of the pressure response characteristic of the roller press (hard, soft, or any intermediate setting) and provides for overload protection. Although simple gravity feeders with tongue control are sometimes provided, most applications require one or more screw feeder(s) with variable (e.g., hydraulic) speed

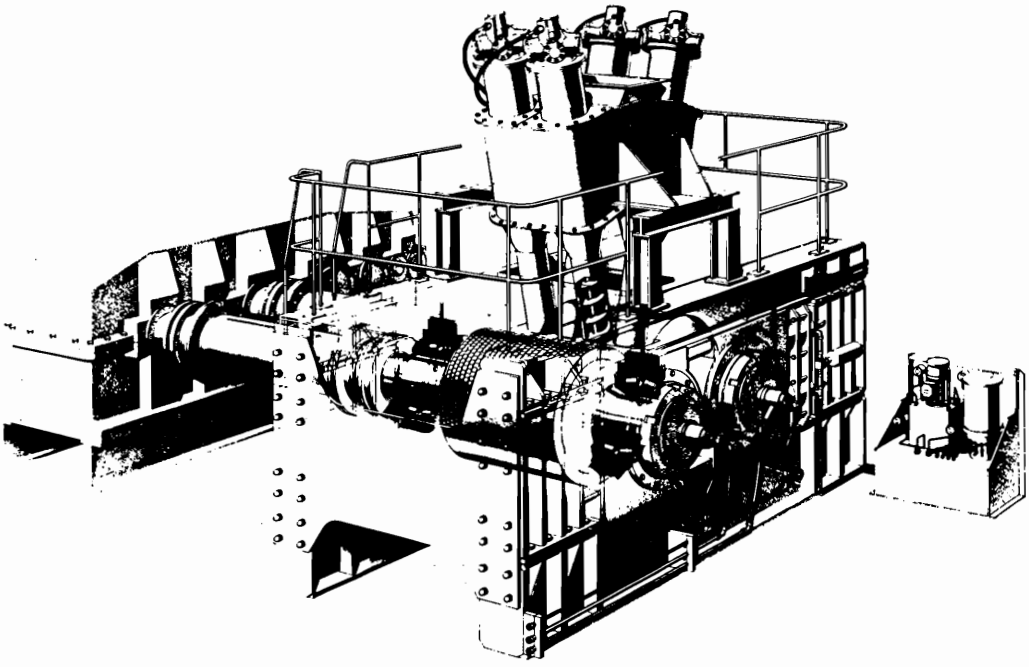

Figure 2. Artist's Conception of a Modern KOPPERN Roller Press.

drives to deaerate and transport the desired amount of material into the nip between the rollers.

Many fertilizer materials are minerals that have a certain hardness and, therefore, cause wear. Other nutrients are salts or chemicals which, particularly in the presence of moisture, may additionally produce corrosion. For these reasons, it is essential that the "pressing tools," which are fastened to the roller core by suitable means, be exchanged in regular intervals for remachining or replacement. A patented design (12) shown in Figure 3 facilitates this work.

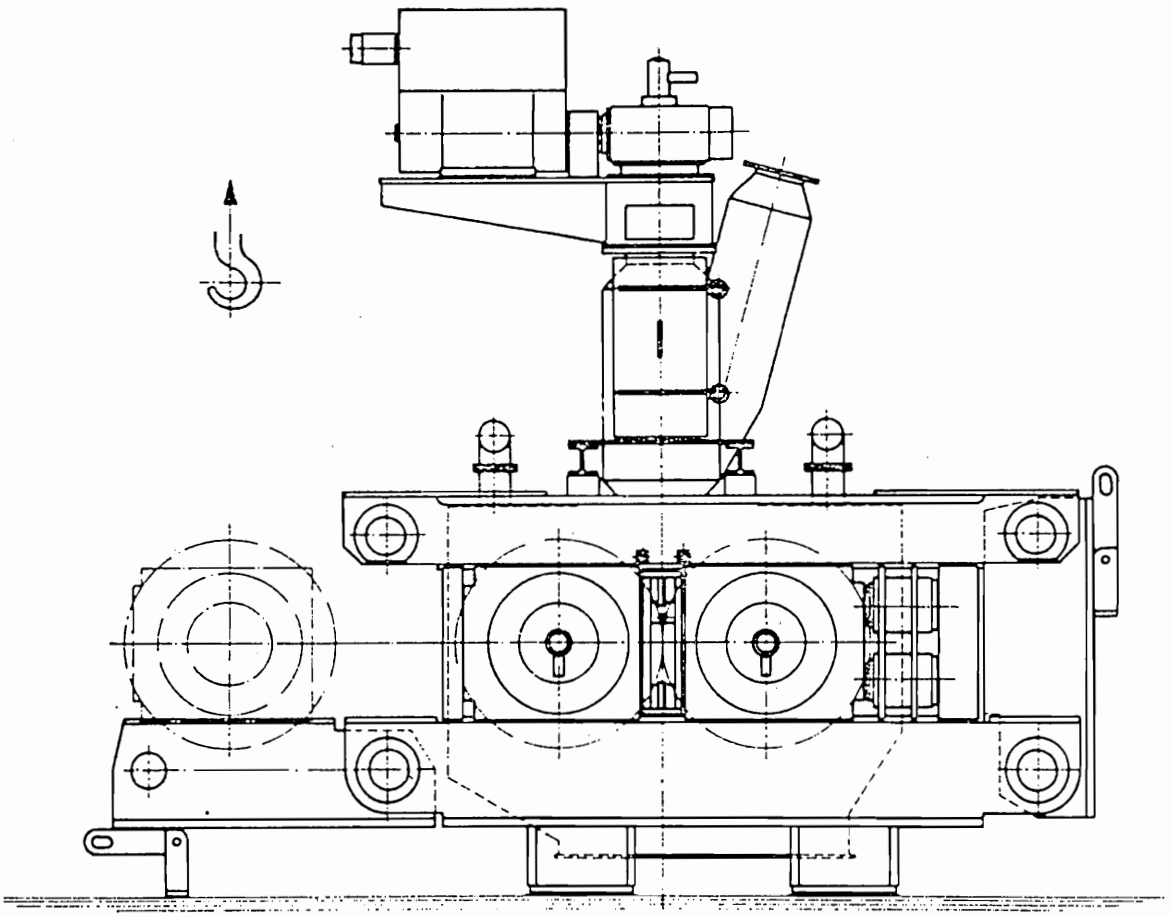

Figure 3. Schematic Representation of a KOPPERN Roller Press Featuring Hinged Frame Design.

Flowsheet of Fertilizer Granulation Plants Utilizing Roller Presses for Compaction

Figure 4 indicates the most versatile flowsheet of a fertilizer granulation plant using a roller press for compaction.

Premixed formulation (1) is fed into a surge (day) bin (2). Recycled material (fines, 17) and dust from the dust collection system (20) are transported to a recycle bin (18). The recycle bin should be large enough to accept the entire holdup of the plant during an emergency or unscheduled switchover. If a new formulation must be run, the contents of the recycle bin (18) can be dumped via a diverter gate (19).

During normal operation, the fresh, premixed (if applicable) feed (1, 2) and recycle (17, 18) are proportioned by star gates and weigh feeders (3). The proportion of fresh feed to recycle should be kept constant; it is only readjusted if the level controls in bins (2) and (18) require such modification of compactor feed composition. Typically, a changed relationship "fresh feed to recycle" necessitates readjustments of the compactor (8) and, sometimes, the oversize crusher (16) parameters. Fresh feed and recycle are homogenized in a low intensity (e.g., pug mill) mixer (4) and transported via bucket elevator (5), metal detector (6), and Redler/chain conveyor (7) to the roller press (8). No matter whether gravity or screw feeders are used to transport the material into the nip between the rollers, it is imperative to avoid "starved" feeding conditions at all times. Therefore, a small stream of overflow, measured by a solids flowmeter (11), is always maintained. The signal from the flowmeter (11) may be used to automatically adjust the system feed rate by controlling star gates and weigh belts (3).

The compacted flakes exiting from the roller press (8) are precrushed by the flake breaker (9) and screened (10) to remove fines. Coarse material is transported by bucket elevator (12) to the screen (13) where the product is separated and transferred to storage silo (14). Oversized material is crushed in the granulator (16) and again separated into three fractions on a double-deck screen (13).

There are several potential modifications to this basic flowsheet (refer to Figures 4 and 6):

1. Elimination of flake breaker (9): Sometimes the flake or sheet produced in compactor (8) breaks up easily

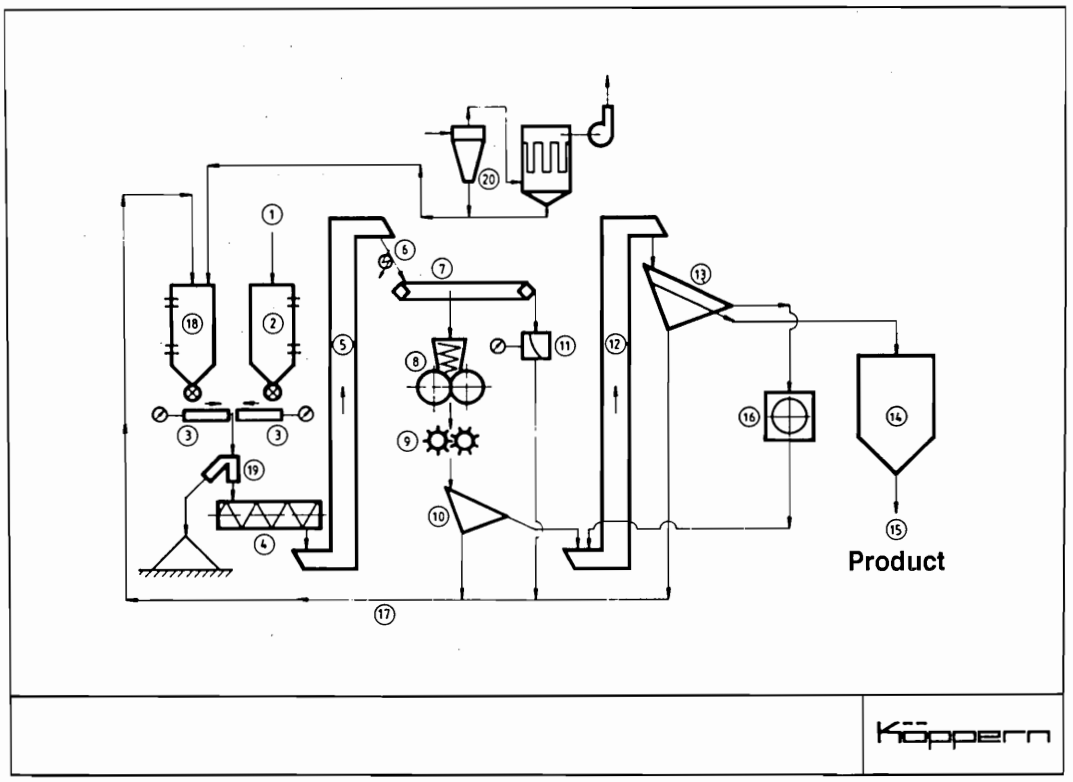

Figure 4. The Most Versatile Flowsheet of a Fertilizer Granulation Plant Utilizing a Roller Press for Compaction.

when the compacted material falls onto a (belt) conveyor or screen and a flake breaker is not required.

2. Elimination of screen (10): Since only approximately 10% of fines [mostly "leakage" from the rollers of compactor (8)] is separated, this screen (10) may be eliminated. However, crusher screen (13) or primary granulator (22) described in paragraph 4 may be less effective.

3. Some materials are relatively soft when leaving the roller press (e.g., due to liquid phases resulting from energy conversion into heat) but quickly "cure" and reach higher strength. In such cases it may be desirable to install a "time delay" of a few seconds (curing belt, 21) between compactor (8) and flake breaker (9).

4. Addition of primary granulator: If the yield of granular product must be optimized, the reduction ratio in a mill or crusher should be minimized. To accomplish this, a primary granulator (22) is installed between screen (10) and bucket elevator (12).

5. Improved sharpness of product particle-size distribution and optimization of yield: Particularly if a primary granulator (22) has been installed in the system, the loading of double-deck screen (13) is so high that its separation efficiency tends to deteriorate. Because limitations are often imposed by the user on the amount of oversize and fines in the product and, on the other hand, the presence of product-grade material in the oversize and/or undersize reduces yield, the decks on screen (13) may be designed to have larger and, respectively, smaller openings than required for attaining product specification; final separation is achieved on secondary screen (23) prior to discharge into product silo (14).

6. Product particle rounding: Even though studies have shown (13) that the irregular (angular) shape of granular fertilizer obtained by crushing (Figure 5) does not have a negative influence on the efficiency and accuracy of distribution by modern mechanical rotary spreaders, it may be desirable to remove the sharp edges in an "abrasion drum" (24) to avoid excessive production of dust during handling and transportation. Additional fines produced in this drum are separated from the product on screen (25) and recirculated.

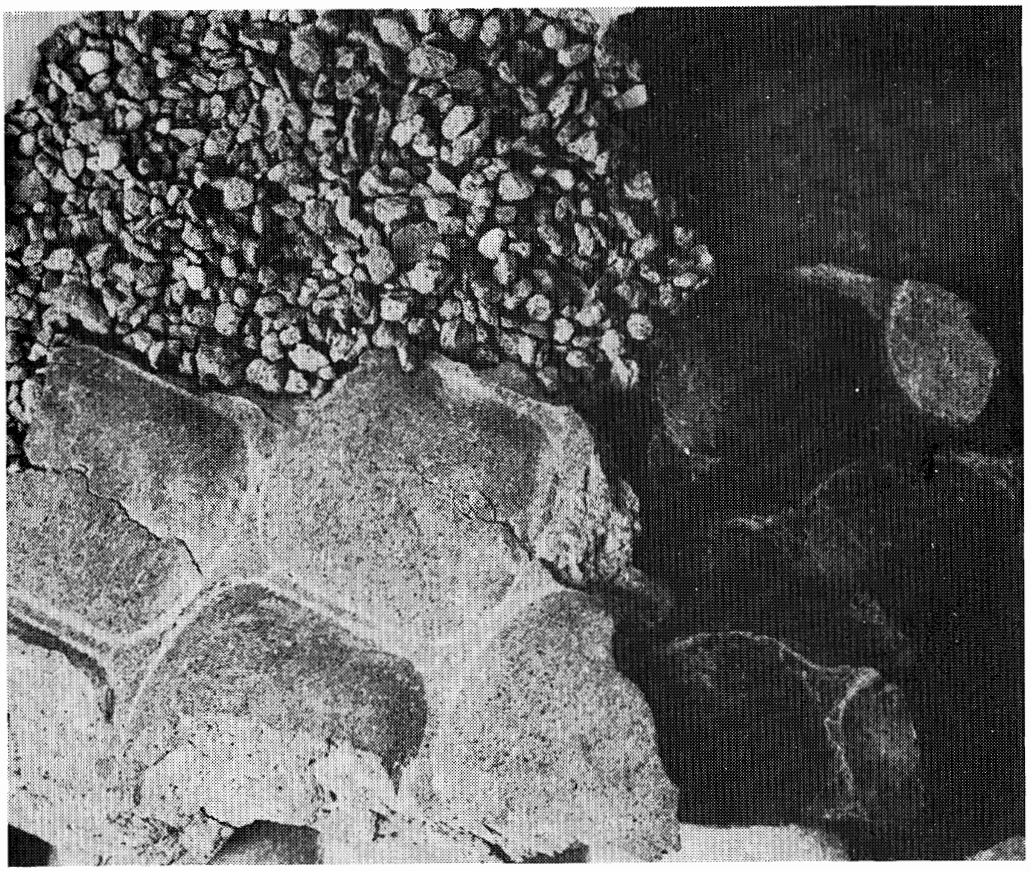

Figure 5. Photograph Showing Sheet (Bottom) and Granular Fertilizer (Top) Obtained by Compacting, Crushing, and Screening.

7. Product conditioning: In some infrequent cases, granular products must be conditioned or treated with anticaking reagents, insecticides, or fungicides. Such treatment can be done in a conditioning drum (26) between screen (25) and bin (14).

Figure 6 is a partial flowsheet (starting with feed to the compactor) incorporating modifications (3) to (7).

Selection of Roller Press and Peripheral Equipment

As previously mentioned, modern roller presses for application in the fertilizer industry feature special designs. In addition, operating parameters are determined during tests with the particular formulation(s). They include specific pressing force, roller diameter, roller speed, and sheet thickness. Machine size and roller width are selected to meet capacity requirements.

The most important parameter is the specific pressing force, defined as the force per unit active roller width (kN/cm) that is necessary to produce a strong enough granular product with acceptable yield (yield = ratio: amount granular product/compactor throughput). It is different for each fertilizer or formulation and varies between approximately 30 and 120 kN/cm (see Table 1) if materials are processed in presses featuring rollers with diameters of 1,000 mm and operating at 12-14 rpm with a sheet thickness of approximately 12 mm. Simple mathematical relationships allow conversion of these figures to the conditions at different roller diameters and speeds as well as sheet thicknesses.

Other determinations made as a result of testing or from experience are the surface configuration of rollers (e.g., smooth, corrugated, waffled, welded), the type and number of feeder(s) (gravity or force), and the drives, i.e., size (kW) and method (single or variable speed, electric or hydraulic, etc.).

Selection of peripheral system components, such as mixers, crushers, screens, and material handling equipment, depends on the material(s) to be processed and, to a certain extent, on whether the plant is dedicated to the production of only one fertilizer or to a variety of formulations. Materials that reach final strength only after some

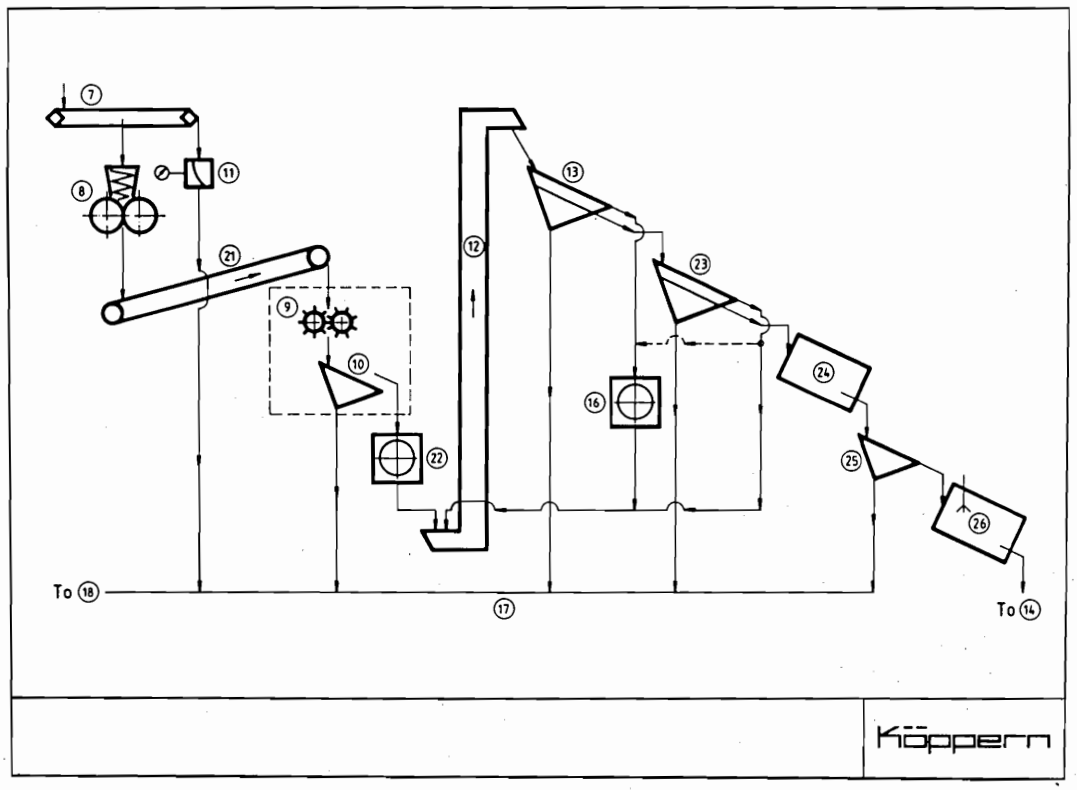

Figure 6. Partial Flowsheet of a Fertilizer Compaction/Granulation System Incorporating Modifications (3) to (7).

Table 1. Specific Pressing Force, Water Content, and Feed Particle Size of Some Fertilizer Materials Established for Compaction in Roller Presses

Fertilizer Material	Specific Pressing Force[a] (kN/cm)[b]	Water Content (%)	Feed Particle Size (mm)
Ammonium sulfate	100-120	0.5-1.0	<1.0
Potash 60% K_2O			
Feed temperature >120°C	45-50	dry	<1.0, with max.
Feed temperature 20°C	70	dry	of 3% <0.06[c]
Potash 40% K_2O			
Feed temperature 90°C	60	dry	<1.0
Potassium sulfate			
Feed temperature >70°C	70	1.0	<0.5
Potassium nitrate	100	0.5-1.0	<1.0
Calcium nitrate	60	dry	<1.0
Calcium cyanamide	60	dry	<0.4
Urea	30-40	dry	2-3 to <1.0
Mixed fertilizer containing			
- No raw phosphate or Thomas slag	30-80	<1.0	<1.0
- Raw phosphate or Thomas slag	>80	<1.0	<1.0
- Urea	30-40	<1.0	<1.0

a. Indicated pressing force is for machine having 1.0-m-diameter rollers.
b. 1 kN/cm = approximately 0.1 tonne/cm.
c. Size criteria applies to >120°C and 20°C material.

curing time–for example, formulations containing urea, partially acidulated phosphates, or superphosphates–and fertilizers obtaining strength by recrystallization from solution, such as ammonium and potassium sulfates, must be handled, crushed, and screened delicately. Other applications, for instance, the granulation of potash, require high energy input for the production of a strong, abrasion-resistant product (14).

Advantages of Granulating Fertilizers by Compaction

There are several important reasons for the decision to adopt compaction with roller presses for the granulation of fertilizers. If "conventional" wet processes are used for only the size enlargement of fine fertilizer materials or the granulation of multinutrient fertilizers formulated by mixing different particulate solid components, relatively large amounts of water are added in the granulator and must be removed in a dryer. After the dryer, a cooler is necessary in most cases. Because of only very limited size control in the granulator, oversized agglomerates must be removed and crushed and all undersized material is recirculated to the granulator. Recirculation rates are several hundred percent, typically 300%-400%. In other words, product yield is only about 20%-30% of granulator throughput.

At the beginning, compaction was applied to produce strong granular potash from KCl fines because dry material could be converted directly. Later this process was introduced to the mixed fertilizer industry primarily to save energy, (15,16). While the yield of granular product after crushing and screening is comparable to that of conventional wet granulation, i.e., between approximately 25% and 55% depending on fertilizer and product particle-size distribution, the entire process is carried out dry. Therefore, a considerable amount of energy is saved which, in wet granulation plants, is expended for drying and cooling. The large amount of recycle, which must be rewetted and subsequently redried and cooled, exacerbates this situation.

This characteristic of granulation by compaction caused particular interest in the technology during the

"world energy crisis" when energy prices rose to unprecedented heights. Today, it depends on the specific location and local costs of energy whether this feature is still a deciding factor. In the meantime, other advantages often play a more important role (1,2,3,4,5,9).

Closely related to the above is the combination of granulation by compaction with conventional wet granulation whereby all or most of the fines and the oversized particles are compacted. The original oversize crusher may have to be upgraded in this case to handle the compacted sheet, but the screening capacity is normally sufficient. The product is a mixture of nearly spherical and irregularly formed particles. This measure increases the capacity of the original system and, at the same time, considerably reduces energy consumption per tonne of granular product.

Today's most important advantage of granulation by compaction is the extreme versatility of the system:

1. Literally all dry particulate materials with only a few limitations as to maximum amounts in a formulation (e.g., urea or triple superphosphate) can be processed. This also includes such materials as, for example, dry, digested sludge from municipal waste treatment plants (17,18).

2. To minimize cost, raw materials can be purchased on the world market without specific requirements on particle size. Off-specification products (fines) can be used and often are even preferable.

3. Compaction plants can be designed for economic operation at any feed rate. Production capacities per line are feasible between 0.1 and 50 tph.

4. Larger plants are preferably equipped with two or more lines, fed by one large compounding (batching or formulation) system. Otherwise the lines are kept separate to improve availability because only one line is down during maintenance and emergency shutdowns.

5. If a plant equipped with multiple lines features separate day bins for fresh feed, recirculating fines, and granulated product, each line can be operated on different formulations.

6. Production of small batches is feasible. Depending on the necessary amount of cleaning during changeover (determined by how much cross-contamination can be tolerated), up to three different batches (formulations) per 8-h shift can be produced.

7. Granulation plants utilizing compaction can be combined with either custom designed batching systems or with standardized formulation or bulk-blending units. Particularly the latter methods allow easy expansion of bulk blending to mixed fertilizer granulation.

8. Any compaction/granulation system can be utilized as a regional production facility for the manufacturing of bulk-blend-grade material from off-specification feeds. These include special formulations required by the local market such as indigenous fillers, with or without major nutrients, or carriers for micronutrients. Such products can then be used together with imported bulk-blend grade materials in bulk-blending plants.

9. Finally, the fact should be mentioned that plants with roller presses can be easily adapted to the manufacturing of urea supergranules for deep placement in wetland rice production (19). In this case, the roller surface must be modified, the flake breaker (9 in Figure 4) bypassed, and the granulator (16 in Figure 4) blocked off.

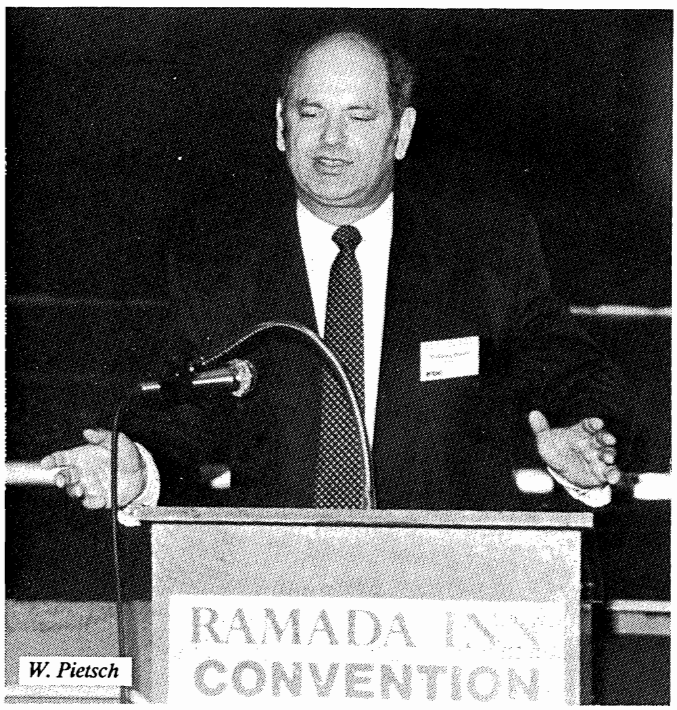

W. Pietsch

Present Status of Granulation of Fertilizers by Compaction

Although the history of fertilizer granulation is relatively short, a large number of plants are operating throughout the world and knowledge about granulated fertilizers as well as their manufacturing methods is well disseminated.

The granulation of fertilizers by compaction is much less known than the "conventional" chemical, wet, or melt granulation techniques. Roller presses for the compaction of potash were first introduced in the 1950s. Today, nearly all major potash producers use this technology for the manufacturing of granular and coarse grades (20). Approximately 10 years after the first use of roller presses for potash granulation, this equipment began also to be used for other fertilizer materials. Today, the technology is well established, and many plants are operating throughout the world (20).

Summary

Today's intensive farming and the needs for increased crop (food) production in the developing countries demand the use of fertilizers. To improve application to the fields and the quality of mixed fertilizers, several techniques have been developed to produce uniform, dustfree, nonsegregating, granular products from particulate (fine and dusty) fertilizer components.

Because, in contrast to conventional methods, the granulation of fertilizers by compaction uses dry feed materials from an almost unlimited number of sources and without special requirements on particle size or distribution, this technique is gaining increasing importance in the industry.

A number of special characteristics, which include versatility as well as applicability for small capacities and batches, make the technology of particular importance for developing countries.

References

1. Rodriguez, C. M. 1989. Production of NPKs and other fertilizers by the method of compaction. A viable solution for developing countries. Proc. Int. Conf. Fertilizer Latin America. Brit. Sulphur Corp., London, United Kingdom, Caracas, Venezuela, 449-458.

2. Pietsch, W., and C. M. Rodriguez. 1987. Granulation of Fertilizers by Compaction. Proc. 20th Biennial Conf. IBA. Editor: D. L. Roth, Orlando, FL, 113-126.

3. Swisher, M. A., and C. M. Rodriguez. 1988. Compaction of NPK Fertilizers, Proc. 38th Annual Fert. Ind. Round Table, Baltimore, MD, 34-37.

4. Taylor, L. 1988. Establishing a NPK Compaction/ Granulation Plant in Guatemala, Proc. Int. Workshop, IFDC Spec. Publ. SP-9, Madras, India, 57-58.

5. Rodriguez, C. M. 1988. Compaction of NPKs in Guatemala, Proc. Int. Workshop, IFDC Spec. Publ. SP-9, Madras, India, 59-71.

6. Pietsch, W. 1971. Das Körnen von Düngemitteln mit dem Kompaktier-Granulierverfahren. Aufbereitungs-Technik 12, Vol. 12, No. 11, 684-690. English version in: Proc. of "Particle Technology," Seminar, Indian Institute of Technology, Madras, 335-348.

7. Stahl, H. 1980. Kompaktierung von Düngemitteln, Stand der Technik/Compacting of fertilizers, current state of technology (bilingual), Aufbereitungs-Technik, Vol. 21, No. 10, 525-533.

8. Lupin, M. S., and N. D. Le. 1983. Compaction - Alternative Approach for Granular Fertilizers, Tech. Bulletin IFDC T-25.

9. Pietsch, W. 1984. Granulation of Mixed Fertilizers by Compaction, Proc. 34th Annual Fert. Ind. Round Table, Baltimore, MD, 48-58.

10. Zisselmar, R. 1987. Kompaktiergranulieren mit Walzenpressen, Chem. Ing. Tech., Vol. 59, No. 10, 779-787.

11. Zisselmar, R. 1988. Compaction/Granulation of Fertilizers, Proc. Int. Workshop, IFDC Spec. Publ. SP-9, Madras, India, 46-56.

12. Koch, F. and W. Siepermann. 1975. Roll Press, U.S. Patent No. 3,899,965.

13. Brübach, M. 1973. The influence of particle size, strength, and friction on the distribution of granular fertilizers and insecticides, Ph.D. Thesis, Tech. Univ., West Berlin.

14. Pietsch, W. 1983. Modern Equipment and Plants for Potash Granulation, Proc. 1st Int. Potash Technology Conf., Saskatoon, Saskatchewan, 661-669.

15. Pietsch, W. 1983. Energy Conservation in the Fertilizer Industry - The Compaction/Granulation

Process for Mixed (NPK) Fertilizers, Proc. 18th Biennial Conf., IBA, Colorado Springs, CO, 243-265.

16. Pietsch, W. 1983. Low-Energy Production of Granular NPK Fertilizers by Compaction-Granulation, Proc. Int. Conf. Fertilizer, London, United Kingdom, Vol. 2, 467-479.

17. Pietsch, W. 1985. Compaction/Granulation of Dry, Digested Sludge from Municipal Waste Treatment Plants, Proc. 19th Biennial Conf., IBA, Baltimore, MD, 179-194.

18. Schafer, P. et al. 1987. Compaction and Granulation of Dried Sludge at Ocean County, NJ, 60th Annual Conf. WPCF, Philadelphia, PA.

19. Lupin, M. S. et al. 1983. Briquetting - Alternative Process for Urea Supergranules, Tech. Bulletin IFDC T-26.

20. Pietsch, W. 1989. History, Application, and Present Status of Mixed Fertilizer Granulation by Compaction, Proc. Int. Conf. Fertilizer Latin America, Brit. Sulphur Corp., London, UK, Caracas, Venezuela, 153-173.

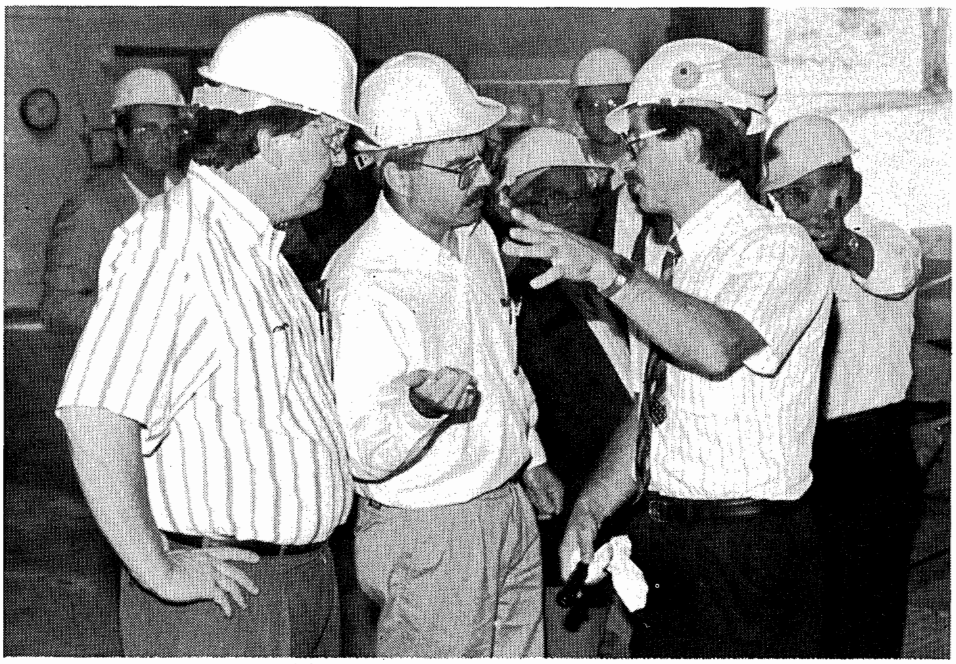

Compaction/Granulation of Fertilizers

Christian Fayard and Pascal Hervieu[1]

Abstract

This paper describes a technical approach to compaction/granulation of fertilizers based on the experience of a large French fertilizer manufacturer, TIMAC S.A. (TIMAC).

Plant flow diagrams are shown, and a summary is given of the main fertilizer types that can be processed by compaction. It has been demonstrated that this process has a role to play in mixed fertilizer production. Its versatility and flexibility can be of great interest when a new fertilizer project is being developed, based on the production of fertilizers tailored to specific soil and crop needs.

The experience of TIMAC shows that this process can be very profitable, provided the company acts as a downstream raw material processing unit and performs the necessary promotion and marketing tasks.

Principles of Compaction

The compaction process is designed to provide agglomeration of various solid materials, powdery or not, under a more or less high pressure and with or without the use of binders. One of its oldest and most famous applications is the production of coal briquettes. The action of pressure on specially prepared blends creates very strong bonds between the particles and provides dense and compact solid products. These bonds may be of various origins, for example, ionic forces and van der Waals forces.

The Compaction Process

There are several means to apply pressure. The equipment used in the compaction process for fertilizing agents is a machine referred to as a "compactor"; it consists of two cylindrical rollers on parallel axles as shown in Figure 1. These two rollers are pushed very strongly, one against the other, by means of a force that is generally constant. In this machine, the axis of roller 1 is fixed while the axis of roller 2 is pushed by a constant force (F2) towards roller 1 by means of two or four hydraulic jacks. The pressure in these jacks is regulated by means of a hydraulic circuit. If one applies the combined forces F1 (feeding pressure) and F2 (compacting pressure) on a particle (M), frictional forces generated by the rotation of the rollers will cause this particle to move downwards, run through the rollers, and undergo a very high compression.

The choice of the feeding method is critical. This feeding can be achieved in different ways as illustrated in Figure 2.

Method A: **Screw Force-Feeder Systems**
These can be multiple, vertical, or inclined. As a rule, the rotational screw speed is variable, and the feeding screw is tapered to ensure a good product deaeration.

Method B: **Feeding Hopper System**
The level in the hopper is adjustable and has to be kept constant.

Method C: **Vibrated Horizontal Screw System**
This system is used when the products are fine and cannot easily be deaerated.

Method D: **Horizontal Feeding Screw System**
This system is used for superposed compaction cylinders.

The design of the mechanical arrangement between these various feeding systems and the nip point of the rolls is very important, and each manufacturer has his own design. It took our company more than 5 years to determine the optimum design.

Operating Parameters for the Compaction Process

We know by experience that there is an optimum pressure range for a given product. For example, a lower pressure leads to a bad cohesion of flakes, whereas a higher pressure leads to the cleavage of flakes (fish bone phenomenon), prejudicial to the plant yield and the final product quality. Depending on this pressure, we can determine the optimum apparent density of flakes (d_o).

The output of the press (Q) is given in the following formula:

$Q = K \times \pi \times D \times N \times L \times E \times d_o$ (terms defined in Figure 1).

1. President, TECHNIFERT S.A.–France, and Sales Manager, Sahut-Conreur–France, respectively.

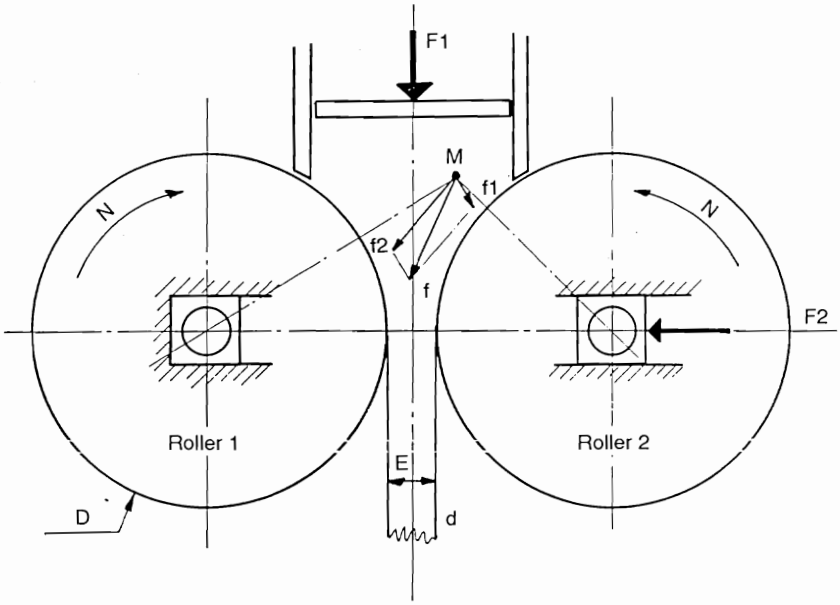

F1 = Feeding Pressure
F2 = Compacting Pressure
D = Roller Diameter
L = Roller Width
N = Roller Speed (rpm)
E = Flake Thickness
d = Flake Density
f1 = Frictional Force From Roller 1
f2 = Frictional Force From Roller 2
f = Resultant Force
K = Emperical Constant

Figure 1. Basic Elements of a Pressure-Roll Compactor.

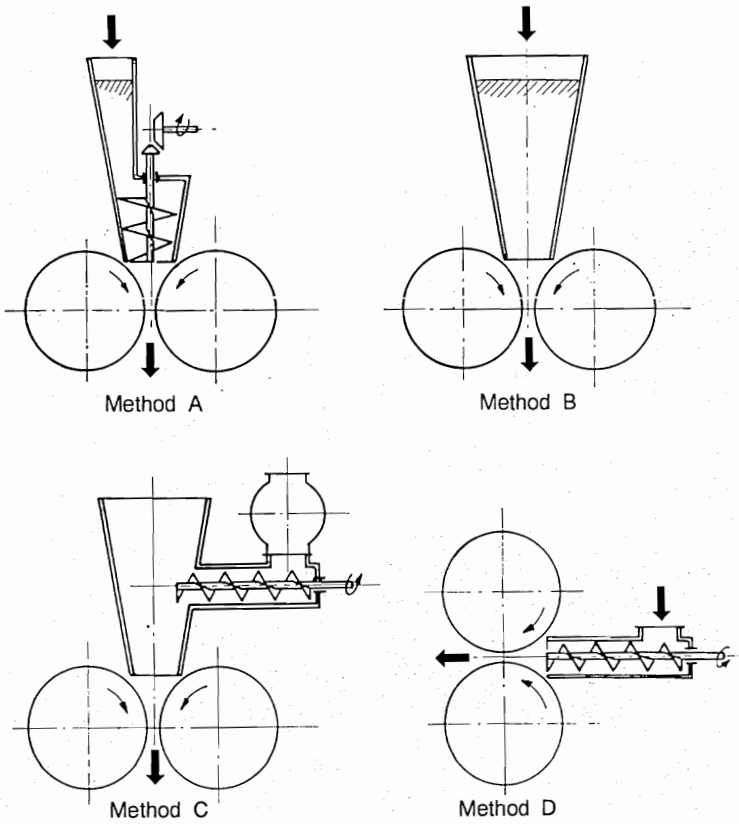

Figure 2. Various Feeding Systems for Compactors.

Obviously, the design and adjustment of the unit aims at increasing the output (Q) as much as possible for (1) a given power consumption involving drive of cylinders, force-feeding drive, and the hydraulic circuits; (2) a minimum investment; and (3) a minimum maintenance cost. The mechanical stresses and thus the equipment investment increase with the width of the cylinders (radial load on the roller bearings). The wear of cylinders and thus maintenance costs increase with the rotational speed for a given cylinder diameter.

There is an existing complex relationship between the angular rotational speed and the diameter of the cylinders for a given product. Under particular conditions, one can reach a critical angular speed leading to self-feeding of the press and to a loss of control of compaction. Consequently, the parameters D, L, and N are to be determined, once and for all, at the design stage, according to the required products. Therefore, the equation of output will be the following one, for a given product:

$$Q = K \times E$$

Flake thickness (E) will be influenced by (1) power available on drive, (2) force-feeding pressure, (3) compaction pressure, (4) surface quality of cylinders (roughness), (5) the shape of the cylinder surface, which can be smooth, corrugated, herringboned, pocketed, or some other variation, and (6) the deaeration condition of the product. As a matter of fact, the relations are relatively complicated. However, various systems will enable us to control them including (1) a system of regulation of the force-feeding pressure to maintain a constant power consumption and a constant flake thickness and (2) an interlocked regulation system acting upon force feeding, gap between rollers, rotational speed, and power consumption. The optimum choice of parameters will be a compromise between the compaction theoretical optimum value and the operational optimum value. Under such conditions, the experience of the manufacturer is particularly important. The most significant compaction parameters are shown in Table 1.

Table 1. Usual Variations in Compaction Parameters

		Minimum	Maximum
Roller diameter	(m)	0.6	1.2
	(in)	24	48
Roller width	(m)	0.2	0.8
	(in)	8	32
Compaction pressure	(t/linear cm)	1	10
	(t/linear in)	2.5	25
Roller speed	(rpm)	10	22
Flake thickness	(mm)	8	25
	(in)	1/3	1
Compactor throughput	(tph)	10	100
Compactor drive power	(hp)	75	1,000
Flake density	(g/cm^3)	0.8	2.5

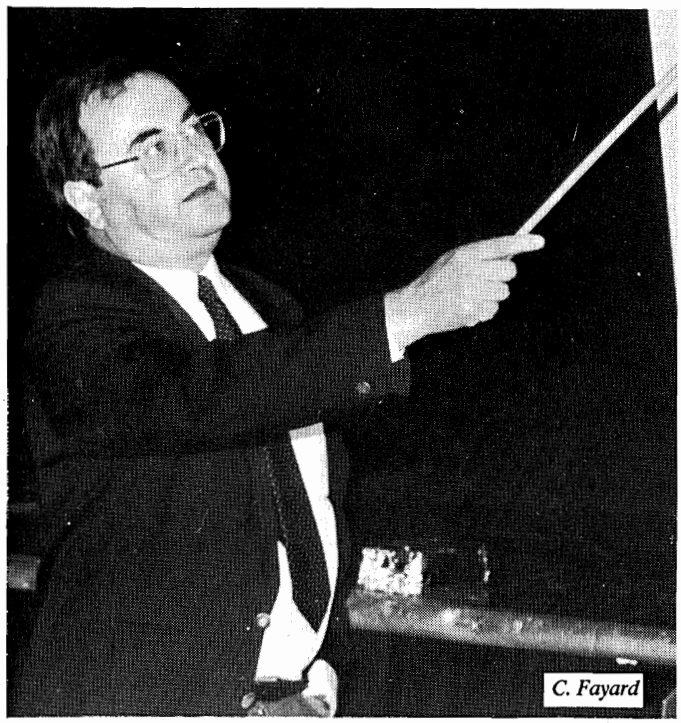
C. Fayard

P. Hervieu

Main Process Steps

A compaction/granulation unit includes five main process steps described as follows:

Step 1: Raw Material Preparation (Figure 3)

This section usually includes:

- A feeding hopper with a rough-screening system (elimination of big lumps) and, possibly, a lump-breaking system and a magnet.
- Material storage hoppers before dosing or weighing.
- A weighing system (batch or continuous).
- A raw material grinding system, if needed. It is advisable to have particles smaller than 1 mm to improve the homogeneity of final product and the production yield.
- A homogenizing system (mixing system).
- A controlled feeding system to the compaction machine.

For practical purposes, a similar raw material preparation system can be found in traditional granulation plants or in bulk-blending plants; thus, compaction can often be judiciously associated with bulk blending.

Step 2: Compaction Section (Figure 4)

The compactor includes the following main subunits:

- Feeding hopper.
- Force-feeding system.
- Compacting cylinders.
- Flake breaker.

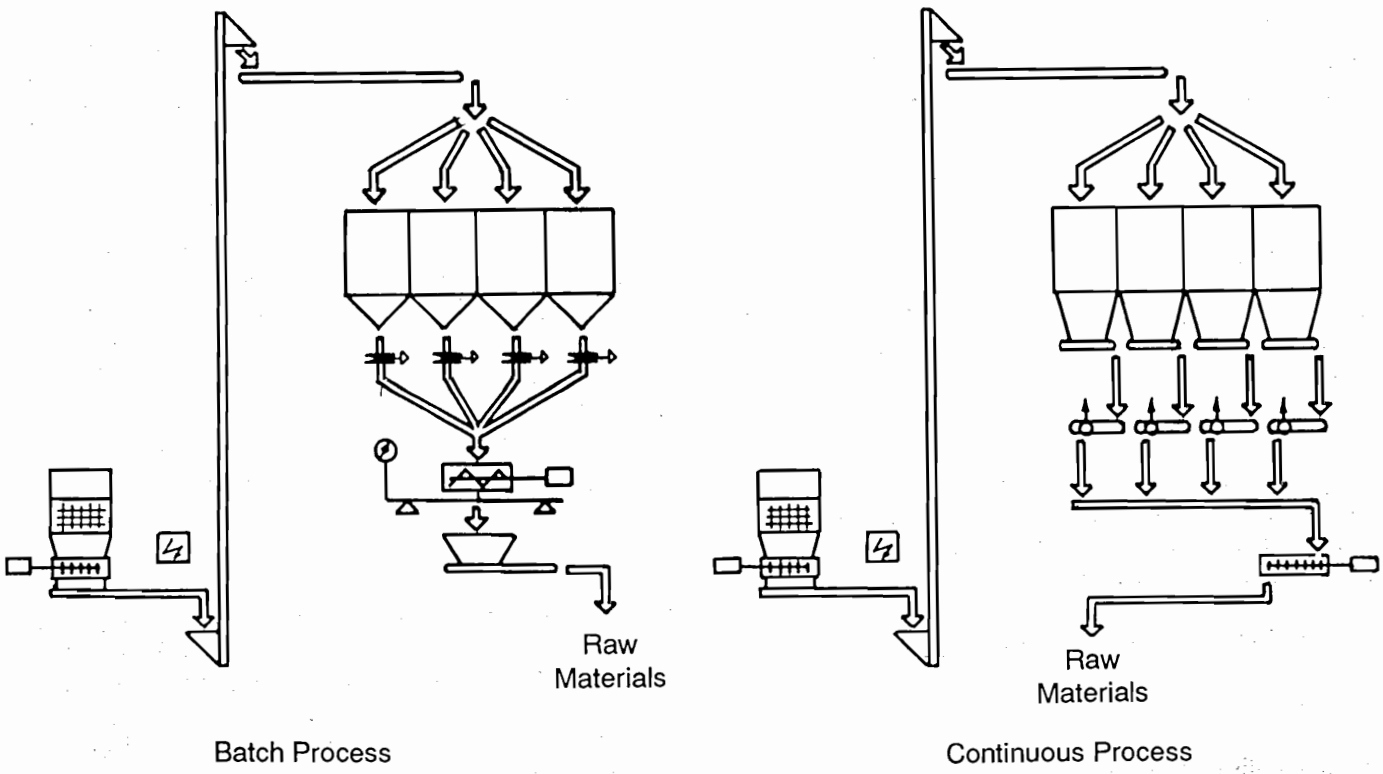

Figure 3. Preparation of Raw Materials For Compaction/Granulation.

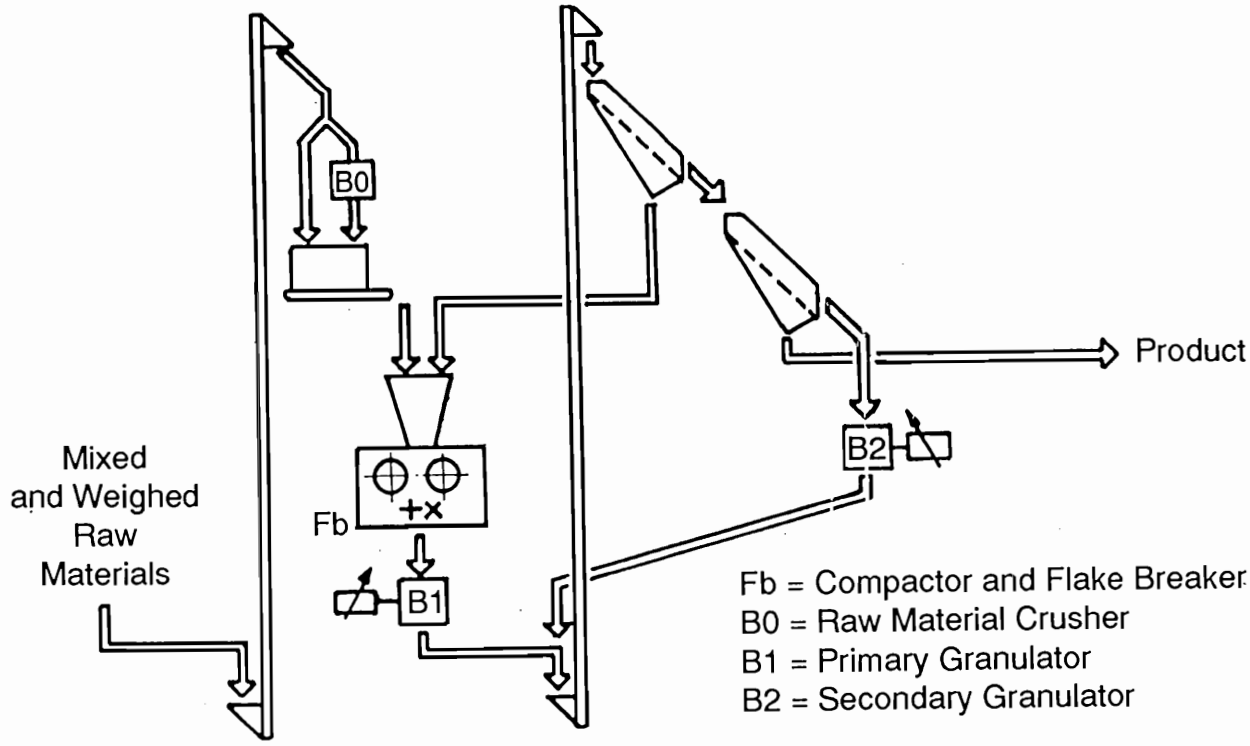

Figure 4. Typical Compaction/Granulation Plant.

The output of the compaction section consists of a solid sheet of material (flake) that is usually broken into very rough lumps measuring approximately 40 mm in width.

Step 3: Granulation Section (Figure 4)

This section includes:

- A system of granulators (crushers) to reduce the size of the flake (lumps) into product-size granules.
- Sizing system (a combination of screens).

This section has considerable effect upon the plant capacity. According to the system chosen, or the choice of screen grids (oversize, product, and fines), the yield of product can change markedly.

Step 4: Finishing Section (Figure 5)

This section includes:

- Dry polishing unit with (a) a polishing drum to improve the quality of the final product by rounding off the sharp edges of the granules, which limits the generation of dust and removes weaker granules and (b) the finishing screen(s) to remove the dust generated by the abrasion of granules in the polishing drum.
- A granule polishing and hardening unit consisting of (a) an impregnation and regranulation drum where water, steam, or slurry is introduced in small quantity; (b) a drying system to adjust the water content of the final product, which is very important to avoid caking later on; (c) possibly a cooling system (a fluidized bed or the mere injection of cold air under the finishing screen); and the (d) finishing screen(s) to allow removal of fine or large particles formed by agglomeration during the process.
- A coating unit, which facilitates (as in traditional granulation plants) the application of a coating to limit caking and which sometimes can be used to treat the external surface of the granules (for example, production of slow-release fertilizers). The coating unit includes (a) a coating drum fed with solid or liquid coating agents and (b) a screen to remove any lumps formed in the coating drum.

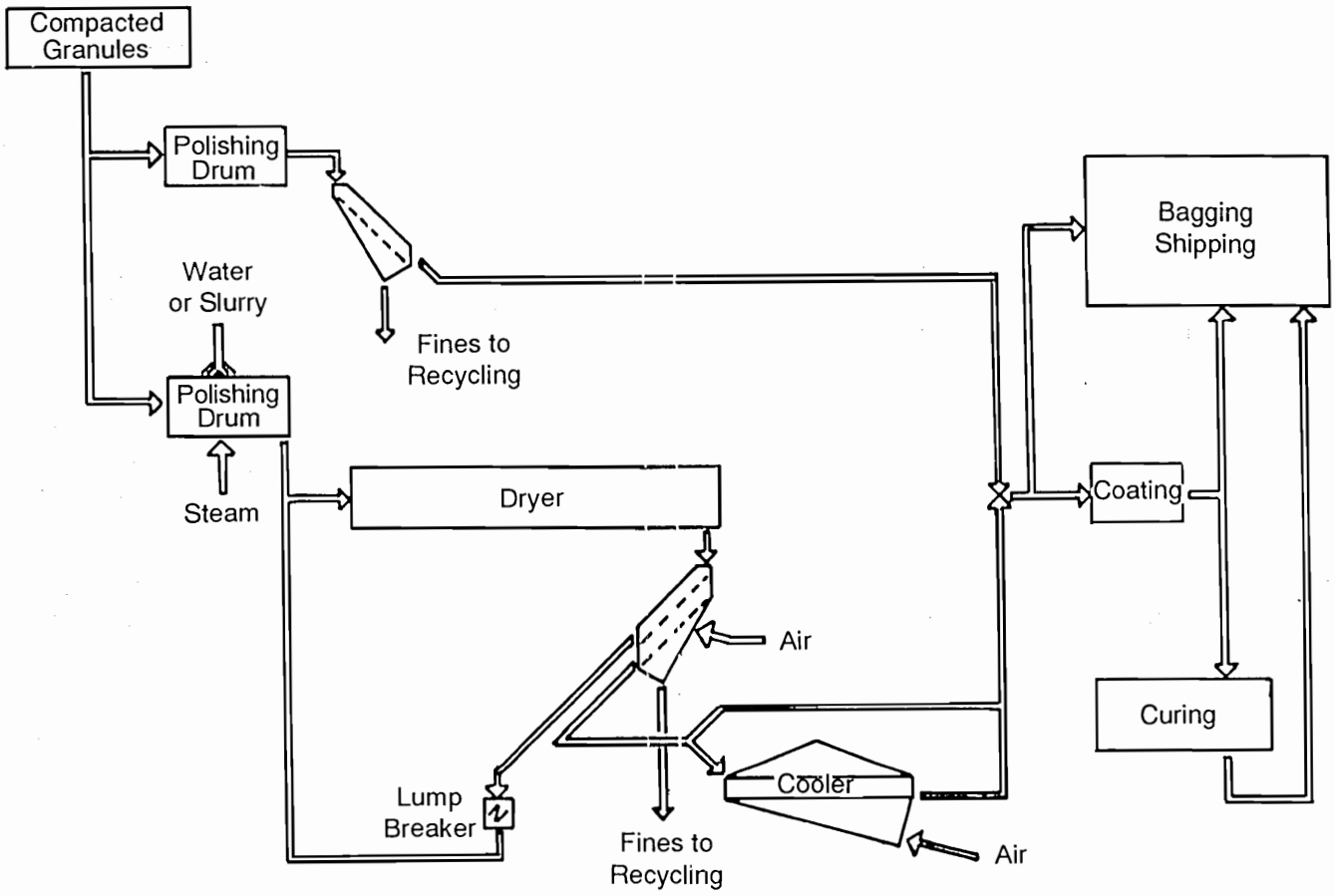

Figure 5. Typical Finishing Line of a Compaction/Granulation Plant.

It should be observed that, as a rule, compacted fertilizers have less tendency to cake.

Step 5: Storage and Packing Section

This section can be found in other fertilizer plants.

Fertilizers produced by compaction, except for rare exceptions such as fertilizers with a very high urea content, do not require any curing period before packing and delivery.

The optimization of the process is achieved by combining the three main interdependent process stages: (a) compaction (agglomeration of components), (b) granulation (shaping and granulation), and (c) finishing processes (which will determine the quality of the final products).

History of the Process

The compaction/granulation process has been used for a very long time for potassium chloride granulation. More than 20 years ago, small units (5 to 10 tph) were set into operation in Europe by small producers (one PK and NPK unit in Switzerland, one PK and NPK unit in Germany, and one potassic slag unit in France); these units are still operating. Since then, a number of new plants have been built with capacities up to 60 tph: in France and Belgium (6), Switzerland (1), Germany (2), Portugal (1), Guatemala (1), the Philippines (1), Greece (1), Turkey (1), and very recently in Finland (1).

Numerous projects all over the world are in the feasibility study stage at the present time. As a general rule, they are based on various motivations including:

- Multiple formulations combining highly specific materials adapted to local farming conditions and to economical supply facilities.
- Production of fertilizers that are technically difficult to produce in the traditional way.
- Raw-material granulation for bulk blending (for example, ammonium sulfate).
- Production of intermediate fertilizing agents that fall between fertilizers and soil amendments.
- Minimizing investment and obtaining easy operation.

The compaction/granulation process is mainly of interest to medium-sized firms acting as "processing companies" and does not concern the "basic manufacturers" whose production policy aims at producing a limited number of standardized products, for example, diammonium phosphate or triple superphosphate, or highly concentrated formulas such as 18-24-12 and 17-17-17 on a large scale.

TIMAC Experience

Much was learned from the experience of the French fertilizer company, TIMAC. In 1975 TIMAC was a medium-size producer of amendments and powdery fertilizers containing soft-ground phosphate for direct application. It was then decided to build a compaction/granulation unit to process these materials. This unit was set into operation in 1976 in Saint Malo (France) and included three compaction lines, each with a 10-tph product capacity (Figure 6). After difficult starts, TIMAC began to control the process gradually while (a) diversifying their range of products and the use of raw materials, (b) automating the plant as much as possible, and (c) optimizing the compaction technique to increase instantaneous production. These units are now under perfect control with a constant improvement of the working costs and the quality of the products produced.

The daily production is around 900 to 1,250 tpd. At the present time, the plant in Saint Malo is the largest in the world. It is also the only one capable of processing such a wide range of raw materials and producing such a large

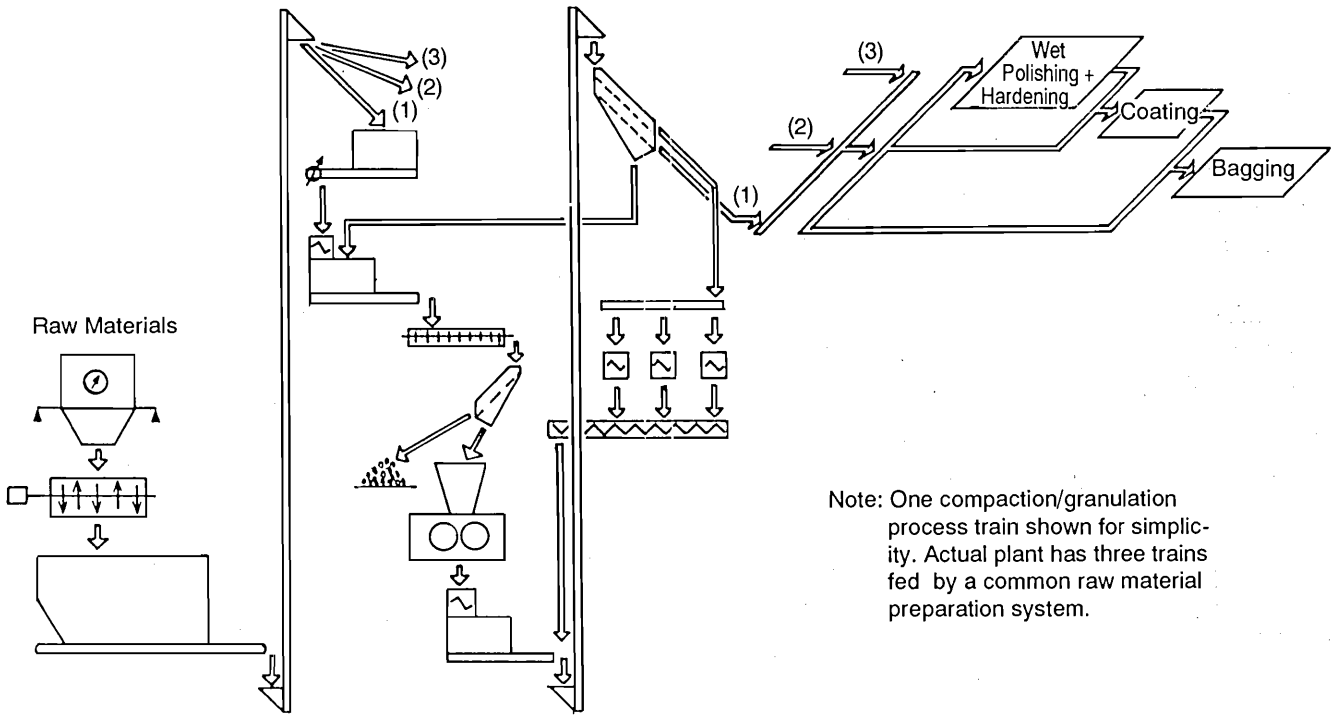

Figure 6. Flow Diagram of TIMAC Compaction/Granulation Plant – Saint Malo, France.

selection of finished products. TIMAC, a subsidiary of the Roullier group, has control over 12 granulation units and therefore has a perfect knowledge of the respective advantages and limits of the different processes.

TIMAC Production Cost Profile

It is always difficult to provide accurate data about production costs because such data depend on factors that vary strongly from one plant to another. Therefore, we will merely outline the main expense headings and give an example of the TIMAC operation under French conditions of operation (Table 2).

Table 2. Example of Typical TIMAC Production Costs

Cost Item	FF	US $[a]	%
	- (tonne product) - -		
Variable Costs			
Energy			
Gas	0.80	0.16	
Electricity	15.20	2.98	
Maintenance			
Compaction supplies	9.00	1.76	
Total variable costs	25.00	4.90	27.8
Fixed costs			
Manpower			
Maintenance	7.00	1.37	
Production	3.50	0.69	
Maintenance			
General supplies	5.40	1.06	
Improvement works	1.70	0.33	
Overheads	1.20	0.24	
Total fixed costs	18.80	3.69	20.9
Depreciation (assuming a new plant with full financial charges)	46.30	9.08	51.3
TOTAL	90.10	17.67	100.0

a. US $1.00 is equal to FF $5.10.

Main Operational Expense Categories

A. Energy (refer to Figure 7)

	kWh/t
Electricity:	
- Raw material preparation	3-8
- Compaction line	15-25
- Finishing line	2-15
- Air conditioning and dust removal	4-8

Oil or Gas

Generally used to produce hot gas or steam for the conditioning system.

B. Maintenance
Expenses corresponding with the maintenance of the specific compaction equipment, which is generally proportional to the time of use follows:

	hour
Compaction wheels	5-15,000
Force feeders	Up to 3,500
Granulator grids	300-1,000
Compactor rollers	Up to 25,000

C. Manpower
From 1 to 2 operators per shift for production
From 0 to 2 maintenance workers per shift

D. Depreciation
Generally the largest heading

E. Overheads
Generally low because the technical staff is not a significant expense, thanks to the simplicity and flexibility of the operation

Advantages of the Process

Dry or Low-Moisture Agglomeration–Because the process is carried out dry or with a low moisture level, compaction/granulation has the following advantages:

- A very low or nonexistent energy consumption for drying.
- Use of electricity as energy instead of fuel oil or gas.
- Few corrosion problems and therefore a low maintenance cost.
- Low pollution level (no processing of liquid or gas effluents).
- Possibility of manufacturing products that are difficult, or even impossible, to produce by wet process (high-urea fertilizer, for instance).
- Less caking problems and better keeping quality of fertilizers.

Mechanical-Type Technology–This generally implies the following advantages:

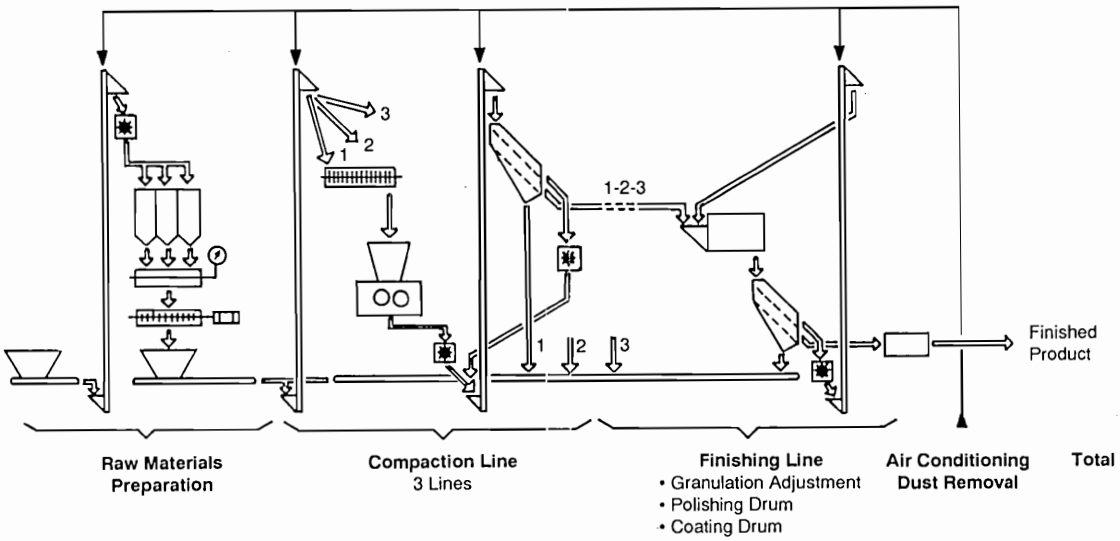

	Raw Materials Preparation	Compaction Line 3 Lines	Finishing Line	Air Conditioning Dust Removal	Total
Installed Power (Kw)	342	1413	343	596	2694
Consumed Power (Kw)	285	1050	122	320	1777
Production (tph)	51	3x17 (51)	51	51	51
Consumed power (Kwh/t)	5.6	20.6	2.4	6.3	34.8

Figure 7. Energy Consumption Data for TIMAC Compaction/Granulation Plant – Saint Malo, France.

- Low investment cost (use of simple equipment and materials).
- Shorter delivery time.
- Wide adaptability to local conditions (products, raw materials, technological level, and production capacity).
- Flexibility of plants with regard to capacity and sophistication (from the 5 tph unsophisticated plant to the fully automated plant with a capacity of 60 tph or more).
- Compact plant layout due to simple circuits.
- Very high service factor (capacity utilization), usually over 90%.
- Easy operation and maintenance of plants. The staff does not need special training.
- Reduced staff required to operate the plant.

Flexibility and Versatility – The cost of the raw materials selected can be optimized thanks to the flexibility of the process. We have developed a computer program that enables us at any time to adjust the optimization of the cost of raw materials according to the evolution of the market and the restrictions in formulation. This process allows quick changes in the production while limiting mistakes in formulation. A change in formulation requires 30 minutes at the most to drain the circuit and start a new product. Thanks to this process, we could produce in the same plant a fertilizer that contains soft-ground phosphate, a traditional concentrated NPK (17-17-17), a very specific formula such as 14-6-24 + MgO + B_2O_3, or an NK product (14-0-20). The plant should be designed from the start to thoroughly take advantage of these "à la carte" formulas.

The interest in this process is the direct consequence of a low production cost and a raw material cost that can be optimized at any time (savings in raw material cost can pay the production cost). The flexibility in the use of raw materials enables one to eliminate the supply constraints in that the plant can easily adapt to the change of raw materials. The formulation flexibility and the wide spectrum of feasible formulas facilitate a high rate of utilization of the plant all the year round while closely following the seasonal needs for a diversified line of products.

On the basis of the above points, we can say that an interested and original type of production management can and must be adopted. And, as the instantaneous overcapacity of production does not bring a significant

increase in the operating fixed charges, the plant can adapt its production to the market demand and work with minimal stocks of finished products.

Limitations of the Process

A Dry Agglomeration Process

This implies that there are very strict limits for the free-moisture content of mixtures before compaction. The compaction of superphosphates is tricky, and a predrying or at least long-time aging of the superphosphates is required.

Process Solely Adapted to the Finished Product Processing Unit

The compaction/granulation process is not suitable for the production of basic raw materials. Arrangements can be made, however, for the production of partially solubilized phosphates where water and free acidity can easily be controlled.

Commercial Presentation of the Finished Granules

The compacted granules are not as spherical as those obtained with a conventional granulation process, and the granule size range is more irregular. Some products that have not been submitted to a surface-hardening treatment during the finishing stage generate dust during handling.

Because of these product conditions, the customer (farmer) can be slightly reluctant; he must get used to the new appearance of the product, and consequently a marketing effort should be considered. On the other hand, the favorable product quality/price ratio of compacted products helps to promote their sale and use.

Conclusions

We do not say that compaction is the universal solution to fertilizer granulation problems or that this process is capable of coping with all the issues. We do think that it has been demonstrated that this process has a role to play and that its versatility and flexibility can be of great interest when a new fertilizer project is being developed, based on the production of fertilizers tailored to specific soil and crop needs. Compaction/granulation comes very close to the bulk-blending philosophy, with a system which is more costly but which has the following advantages:

- Use of many powdery raw materials which cannot be easily used in bulk blending.
- Homogeneous granules containing all nutrients, an interesting factor agronomically speaking.
- Disappearance of the segregation phenomena often associated with physical blends.
- An even wider spectrum of feasible formulas.
- A more stable product.

The experience of TIMAC shows that this process can also be very profitable, provided the company acts as a downstream raw material processing unit and performs the necessary promotion and marketing tasks.

Compaction/Granulation of Fertilizers – A Practical, Economical, and Agronomically Favorable Technology in Guatemala

Frank A. Dalton[1]

Abstract

This paper deals with several aspects of the compaction/granulation technology for the production of fertilizers. A brief process description of FERQUIGUA's plant in Guatemala is presented along with a list of the raw materials being used. Several practical aspects of plant operation are discussed including raw material grinding, operation of dust collection systems, urea utilization, ambient humidity, raw material abrasion, monoammonium phosphate (MAP) utilization related to granule hardness and compaction pressure, recycle-to-product ratio, impurities in raw materials, and compaction of straight ammonium sulfate. Methods to reduce caking and improve granule shape are presented. An analysis of the complementary role that compaction plays in the corporation's bulk-blending operation is presented. Finally, key agronomic and economic reasons for the success of this technology in Guatemala are given.

Process Description

The first step of the process is raw material blending, which is accomplished exactly in the same way as in a bulk-blending plant (Figure 1). After blending, the mixture is ground in a cage mill for further mixing and homogenization. This primary feed is mixed with the recycle in a pug mill. After this point, the process is split into two compaction and crushing/screening lines. Three streams are generated by each of the two screens: (1) fines that are recycled together with dust from the dust collection system, (2) oversize that is then crushed, and (3) on-size product that is bagged or stored in bulk.

Raw Materials

The compaction technology is applicable for processing an indefinite number of raw materials. At FERQUIGUA we usually process the following raw materials: urea, ammonium sulfate, phosphate rock, MAP fines, muriate of potash (MOP), kieserite, potassium-magnesium sulfate, borates and other micronutrients, dolomite, and gypsum.

Abrasion is an important factor to consider when selecting raw materials. Of all raw materials used in our plant, phosphate rock and dolomite are the most abrasive. However, they are useful for "cleaning up" the system after working with sticky mixtures. The silica content in raw materials has to be monitored continuously because silica wears the roll surface of the compaction machines.

For some reason, the use of MAP in formulas considerably improves product quality. The required compaction pressure increases as more MAP is used. This can be readily seen in Tables 1 and 2. If we look at Table 2, we see that as the MAP content increases the pressure required for compaction also increases. As a general rule, we can say that the more MAP we use, the higher the compaction pressure required and the harder the granule will be. Urea, in general, reduces the required compaction pressure.

Practical Aspects of Plant Design and Operation

Having two compaction and crushing/screening lines has proved very useful because it permits maintenance and production simultaneously and provides two major ratios (primary feed/recycle) to work with.

Currently, we are installing a cage mill at the beginning of the process for grinding of raw materials before they are blended. This will aid the blending process and reduce in-process segregation by homogenizing all materials. Besides, when processing coated or conditioned raw materials, grinding will provide new uncoated surface areas and thus aid the compaction process.

Proper functioning of the dust collection system is essential to minimize corrosion effects on the equipment.

1. Operations Manager and Research and Development Director, Fertilizers and Agrochemicals Division, DISAGRO Group. Fertilizantes Quimicos de Guatemala (FERQUIGUA) belongs to the DISAGRO Group.

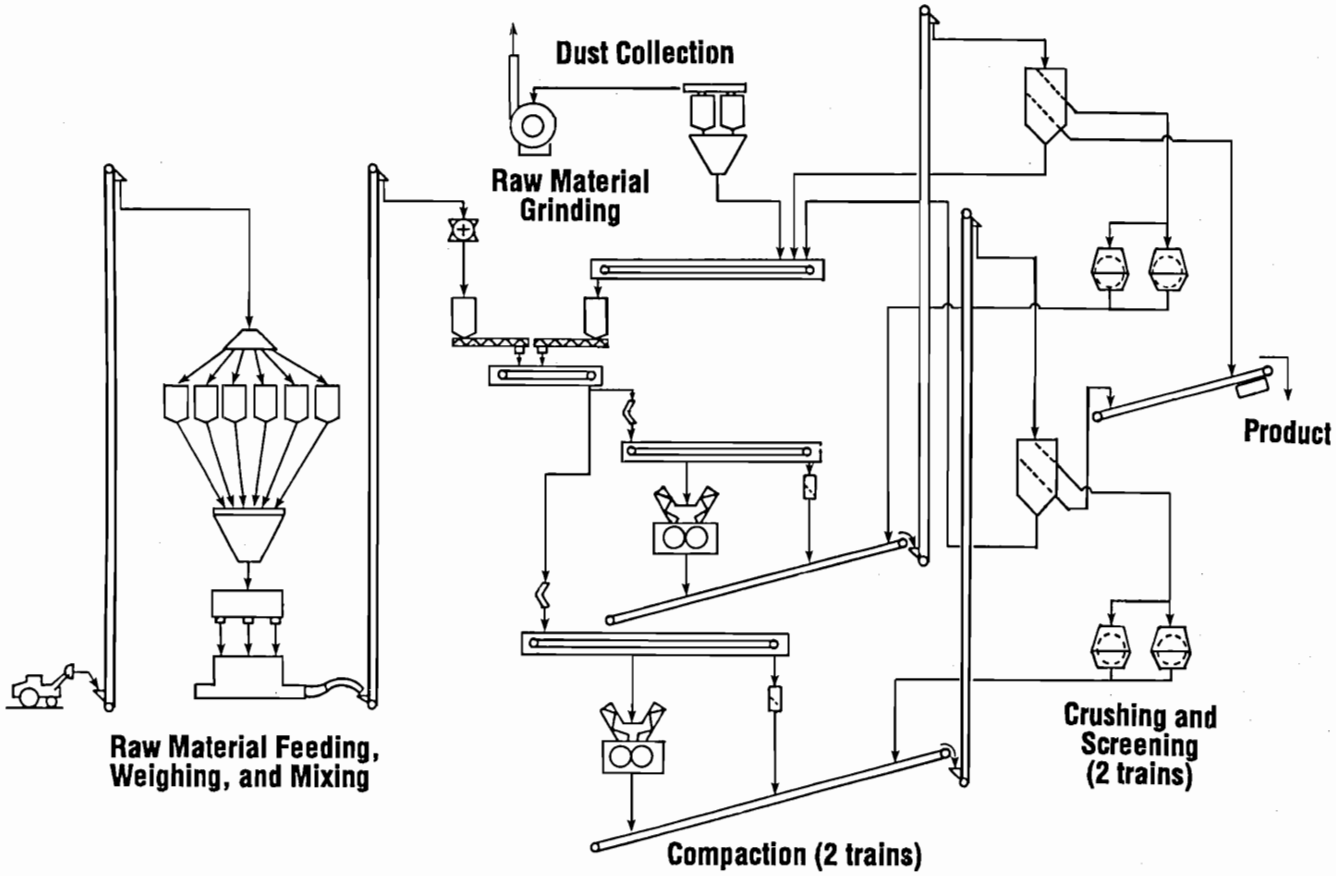

Figure 1. Flowsheet of the FERQUIGUA Fertilizer Compaction/Granulation Plant.

Table 1. Compaction Pressures for Different Formulations

Product	Formulation							Compaction Pressure (bar)[a]	
	Urea	MAP	Phosphate Rock	MOP	Ammonium Sulfate	Borate	Kieserite	Range	Average
	(% by weight)								
16-20-0 A	6.30	31.00	15.00		47.70			80-130	105
16-20-0 B		41.00			59.00			100-160	130
20-20-0 A	18.80	34.60	9.80		36.80			80-120	100
20-20-0 B	15.20	40.80			44.00			90-150	120
15-15-15 A	16.00	24.00	10.00	25.00	25.00			60-90	75
15-15-15 B	11.27	30.40		25.33	33.00			60-90	75
18-6-12-4-1.2 MgO	25.20	12.50		20.00	24.99	2.50	14.81	50-70	60
5-40-0		60.00	40.00					150-220	185
Ammonium sulfate					100.00			180-225	203
Borate						100.00		160-220	190

a. 1.0 bar is equal to 14.5 psi.

Table 2. Effect of MAP Content on Required Compaction Pressure – FERQUIGUA Experience With Selected Formulations

MAP Content (% of Formula)	Compaction Pressure (bar)[a]
12.5	60
24.0	75
31.0	105
34.5	100
41.0	130
50.0	185

a. 1.0 bar is equal to 14.5 psi.

After plant startup in 1987, many of the dust suction lines clogged readily because of the hygroscopicity of the dust. This created a big problem in that the dust settled over the processing equipment, increasing corrosion and housekeeping labor considerably. Fortunately, we were able to correct this problem by changing the layout of the dust collection system, eliminating unnecessary curves and elbows, and modifying some of the duct diameters (air velocity). For very dusty mixtures, water addition in the pug mill is helpful. Also, water addition sometimes improves compactibility. However, a certain limit of water must not be exceeded or product caking tendencies will be increased considerably.

The urea content in formulations is a determinant factor for plant operation and product quality. Required compaction pressure is inversely proportional to the urea content due to the urea's "softness" and binder action. This translates into energy (electricity) savings. Also, as more urea is used in a formula, less dust is generated in the process. However, if too much urea is used, some problems arise. The mixture will have a tendency to compact and stick in the force feeders feeding the compactor rolls. Also, screen blinding will occur, product quality will be impaired, and caking tendencies will increase. For these reasons, we limit the urea content to 30% of the formulation. When ambient humidity is high, the maximum amount of urea used is 25%. Ambient humidity also has an effect on the required compaction pressure. When the humidity is high, less pressure is required. However, product quality is sacrificed because granule hardness will decrease and caking will increase. For these reasons, a dehumidified plant environment is a good idea for a compaction plant, especially if large amounts of urea are expected to be used and if the plant is located in a humid region. Also, with dehumidification, the effect of corrosion and maintenance costs will be minimized. The humidity factor was the major reason why we built the plant where we did – in one of the driest areas of the country.

When the plant is started after a shutdown, it usually takes about 30 minutes for the system to stabilize. Apparently this is due to the recycle, which has an effect on the compaction temperature. After stabilization, the recycle-to-product ratio ranges from about 1.2 to 1.8. This ratio depends mainly on the compacted flake hardness, which varies according to the composition (formula). The recycle-to-product ratio is larger for soft products because more fines are generated in the crushing system. The ratio can be somewhat controlled by adjustment of the crushing system, which is composed of two chain mills (impact mills) per compaction line. For soft flakes, the chain's rotational speed is reduced and, if necessary, one mill is bypassed. For very hard flakes, a flake breaker is required in addition to the chain mills. This breaker is installed at the discharge of the flake conveyor, which transports the compacted flake from the compactor rolls to the screening and crushing equipment.

In many cases, impurities present in raw materials have an effect on the compaction process. A good example is the compaction of straight ammonium sulfate. We have done research for several companies on the compaction of this material and found that some sources of ammonium sulfate compact well while others do not. This fact can only be attributed to minor impurities in the ammonium sulfate because all the other parameters were kept constant. In one ammonium sulfate compaction experiment, water was added in the pug mill and a dryer was installed at the end of the process. The expectation was

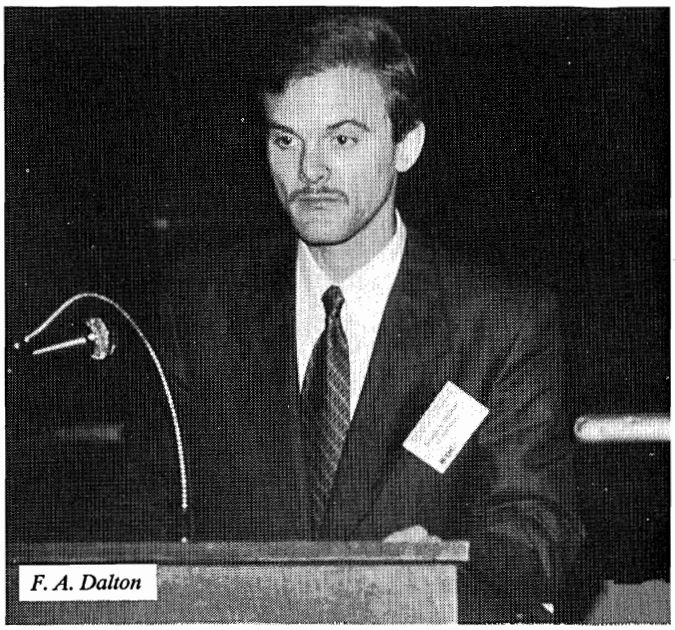
F. A. Dalton

that water would dissolve the particle surface slightly and when the granules were dried the water would evaporate and the particles would bind because of recrystallization. Apparently, this did not occur, in that the resulting (dried) granules were very soft. I personally think this was due to organic impurities contained on the material surface which are not water soluble; thus, two phases (organic and inorganic) are formed between the particles, impairing compaction and binding.

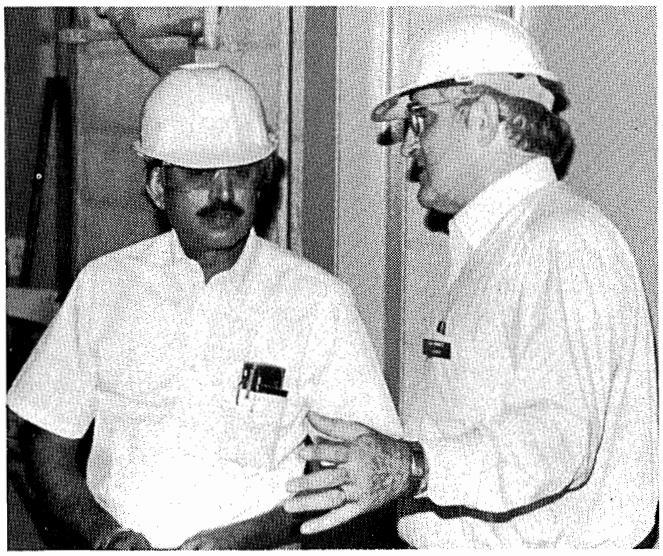

Improvement of the Finished Product

Two major problems with compacted fertilizers are caking and the granule's irregular shape. To some extent they are related in that caking increases with an increase in the level of dust, surface area, and contact. Dust is generated when irregularities break off the compacted granules. There are some methods to solve, or at least minimize, this problem. Granule irregularities can be polished off in a rotating drum; however, it is not possible to achieve sphericity. Caking tendencies can be minimized by granule drying and coating. In our plant we currently do not perform any of these operations. However, we plan to install coating and probably polishing equipment. If we perform both operations, we will do them simultaneously in the same drum. If only coating is selected, it will be done with a liquid spray-type coating at the end of the product belt conveyor. Heat sealing of the polyethylene liner of the 50-kg bags has also proved to be very helpful in decreasing caking.

Relationship Between Compaction and Bulk Blending

In Guatemala, our company operates one compaction plant and two bulk-blending plants. One of the bulk-blending plants is located at the same site as the compaction plant. The bulk-blending plants were established in the late 1970s and early 1980s, and the compaction plant started operation in 1987. At the beginning, we operated the compaction plant independently from the bulk-blending plants. However, it took us only a little time to realize the potential for complementing our bulk-blending operation with compaction.

One of the vital aspects of producing high-quality bulk blends is the utilization of granular raw materials in order to minimize the adverse effects of segregation. This fact prevents using several raw materials that are not commercially available in a granular form. In other cases, the premium for a granular raw material is very high (sometimes as high as $100/tonne for some micronutrient materials). Having a compaction plant permits us to granulate these raw materials for utilization in our bulk-blending plants. In some cases it is possible to compact/granulate the straight raw material (ammonium sulfate and borates, for example). In other cases, the raw material cannot be compacted straight but is compacted with another material (usually MAP fines). The latter case applies to phosphate rock and kieserite. Our bulk-blending operation benefits both economically and agronomically by having a compaction plant to complement it. Furthermore, when we run out of a raw material in our bulk-blending plants, we can often temporarily substitute a compacted product.

In our market the fertilizer demand is very seasonal. Most of the fertilizer is consumed during four peak months. Because of this fact, we compact raw materials for our bulk-blending operation during the off-season. We also spend one full month per year during the off-season doing intensive maintenance.

Key Reasons for the Success of Compaction/Granulation Technology in Guatemala

Some of the reasons for the success of the compaction/granulation technology in Guatemala are common to bulk blending. These reasons are of an agronomic nature. Compaction is suitable for the production of an infinite number of formulas (fertilizer grades). In a country like Guatemala, where soils vary tremendously within a small area (Guatemala is about the size of the state of Ohio) and where many different crops are grown, this fact is most valuable because we need to be able to provide the farmer with a formula that will satisfy his soil and crop needs. There are different raw material combinations that will yield the same nutrient grades, but we can select the materials that will not only fulfill the nutrient grade but also be appropriate for the soil

characteristics. For example, for alkaline soils we would select ammonium sulfate as the nitrogen source because of its acidifying effect. In acid soils, reactive phosphate rock is a good phosphate source and also an economical one. Thus, with a compaction plant, one can find a certain combination of raw materials that will fulfill all the agronomic requirements. Perhaps compaction is not as flexible for changing formulations as bulk blending is, but it has the advantage of yielding a homogeneous fertilizer product. It is common to produce three or more different formulations in the same day. We custom manufacture any formulation as long as at least 40 tonnes is ordered.

In the fertilizer industry, as in any other industry, the production cost is critical in achieving success. In this respect, compaction has two major advantages: First, because of the nature of the process, the physical properties of the raw materials are irrelevant, and this fact often permits the use of very economical off-specification raw materials. Second, one can take advantage of the world market price trends, buying and using raw materials that are cheap at a certain period of time. Despite reports to the contrary, we have found that compacted fertilizers are cheaper to produce than bulk blends. Of course, the process of compaction is more costly than the process of bulk blending; however, the savings in raw materials completely offset this factor in our operation, especially if off-specification materials are used.

Another advantage of the compaction technology is that it is economical on a small scale. This fact is valuable in countries where the demand is small. Also, because of the seasonal demand of fertilizers in Guatemala, the fact that a compaction plant can be started and shut down as required is a big advantage when compared with a wet- or chemical-type granulation plant.

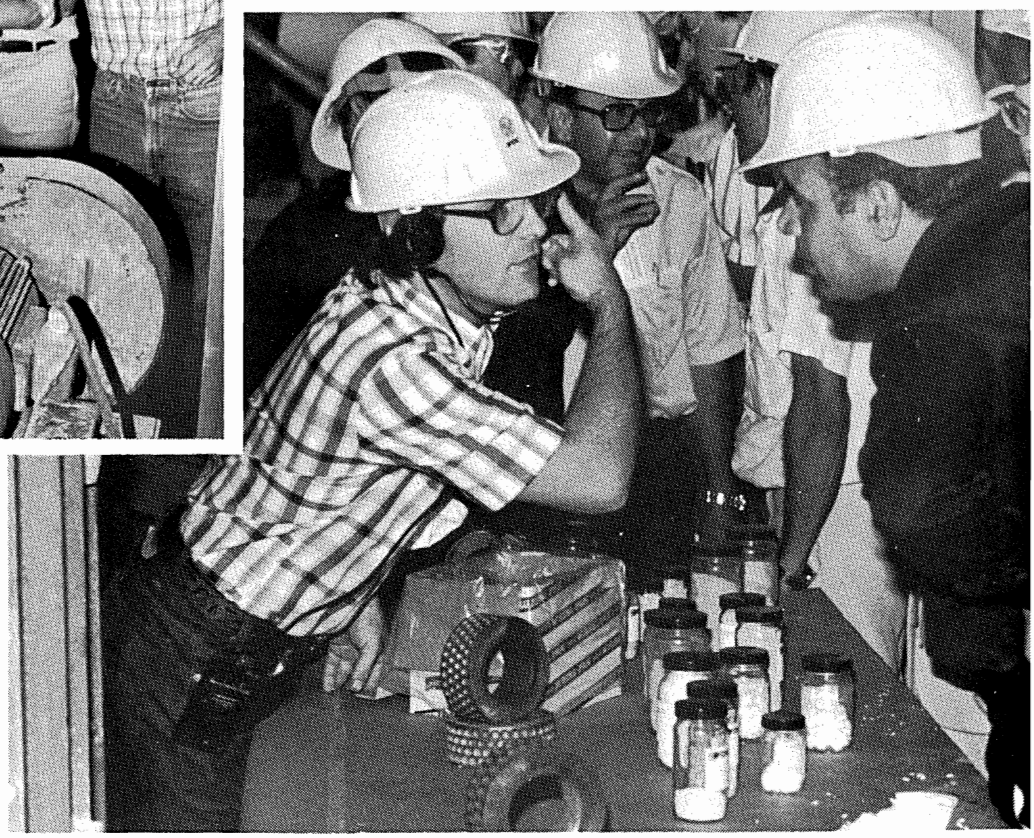

Design Parameters for Bulk-Blending and Compaction/Granulation Plants[1]

Daniel M. Alt[2]

Abstract

This paper describes the design parameters found to be critical when planning and constructing a blending or compaction/granulation plant. The logic that should be followed during the design process is described. Also, the special, and often very important, equipment design features that have been learned from experience are discussed.

Bulk-Blending Plants

Bulk blending has emerged as the most economical process for producing NPK fertilizers. This is due to the large growth in production and availability of granular products (raw materials). A bulk-blending plant requires less equipment and, therefore, requires less expertise; also, it is a simple process to operate. The two major requirements for producing a good-quality bulk blend are the use of raw materials that are closely matched in size and a blending system that is well designed. Bulk blending allows great flexibility in blending custom grades based on soil tests and available raw materials.

When designing a bulk-blending plant, the following questions should be considered:

1. How much storage is required?
2. What materials of construction are available?
3. How will the material bins be partitioned?
4. How will inloading be accomplished – from ship, truck, rail, or all three?
5. What is the required unloading rate? This will usually be determined by ship or rail demurrage criteria.
6. What is the required blending rate? This will be the main factor in determining equipment layout.
7. Will the materials be bagged or loaded out to truck?
8. How much bagged storage capacity is required?
9. What humidity conditions or other special weather conditions may affect equipment operation?

A discussion of the design parameters for the major systems follows.

Storage Buildings

The design of the storage building is based on the amount of raw material to be stored and available building materials. The amount of storage required is based on whether the material is transported by ship, truck, or rail. Raw material received by ship will require a larger storage building than material that is transported by rail or truck. The materials of construction for the buildings are concrete, steel, wood, and mineral composite roofing. Due to the corrosiveness of fertilizer, the best materials to use are concrete and wood.

Inloading System

The design parameters for an inloading system are the unloading rate (tph) and the building profile. The inloading system can load the storage building from the center or from the end. Loading the storage building at the center requires a drag chain conveyor that can change the angle of inclination from 0° to 45°. The shuttle conveyor is a reversible belt that travels the length of the building to provide access to all the bins. The drag chain conveyor feeds a reversible shuttle belt conveyor located above the bins. The drag chain conveyor has the advantage of incorporating a large hopper in the tail section that trucks can dump into. Because the hopper is part of the conveyor, there is no possibility of spillage at the feed point.

Loading the storage bin from the end of the building requires a drag flight conveyor, chain-type bucket elevator, and a belt conveyor the full length of the building equipped with a tripper to provide access to the bins. This type of arrangement involves more equipment and, therefore, is more costly. The belt and shuttle conveyor design consists of three-roll troughing idlers spaced on 4-ft centers. The troughing idlers are usually fabricated of carbon steel, but the rollers can also be fabricated from plastic

1. This paper was originally presented at an IFDC workshop entitled "Supplying Quality Multinutrient Fertilizers in the Latin American and Caribbean Region – Emphasizing Bulk Blending and the Complementary Role of Granulation," October 10-13, 1989, Guatemala City, Guatemala.
2. Vice President, Engineering, The A. J. Sackett & Sons Company – United States.

with stainless steel frames. During installation, care must be taken to make sure that the idlers are aligned and square with the head and tail pulleys. These idlers are fabricated with a 2° tilt which helps to keep the belt trained. On shuttle conveyors where the belt can travel in either direction, every other idler is installed with an opposite tilt to help in training the belt both ways. It is very important that the idlers be lubricated on a regular basis because of the dusty conditions.

Chain-type bucket elevators are recommended instead of belt-type elevators when handling fertilizer material in humid climates. Belt-type elevators tend to slip at the head pulley and burn the belt. The chain has much more positive traction because of the tooth-type sprocket, and it also requires less maintenance.

The Blending System

The design of the blending system is based on the rate (tph) required. A low rate of blending may only require (1) a mixer mounted on a scale that is charged directly by a payloader, (2) a conveyor, and (3) a bagging hopper with a bagger. This type of system will usually blend 20 tph. Most blending plants require a higher throughput capacity. In this case, a tower arrangement is required, which will deliver up to 80-100 tph. This throughput capacity usually will be governed by the capacity of the bagging equipment.

A tower system usually includes a materials conditioner mounted over the boot hopper of an elevator. The materials conditioner is designed to remove (break) lumps from the material; this is essential in humid areas where caking may occur on the outside of bulk storage piles. The chain elevator is sized for 90 tph and discharges to a distributor that channels the material to any one of six 15-ton-capacity bins in the overhead hopper system. Each of the hoppers has a high- and low-level indicator. These indicators operate lights on the payloader operator's panel. From the panel, the payloader operator can determine which bins need to be filled. Each bin is also equipped with an air-operated discharge gate.

The material from the overhead hopper is weighed into a weigh hopper. The weighing mechanism can be all mechanical and have a dial head fitted with an electronic load cell connected to a digital read-out. With the electronic system, a computerized batching system can be incorporated into the design. The computerized batching system allows one to store up to 60 formulas in "memory." It is also capable of inventory control and can produce a material use record and a summary report of each.

When the system is started, it will automatically weigh in the materials for any given formula. After the formula has been weighed, the weigh hopper gate will automatically open to discharge the material into the mixer.

Mixer Design

There are a number of factors to be considered in the design of a mixer:

1. Speed of filling the mixer.
2. Mixing time required.
3. Speed of discharge.
4. Mixer capacity.
5. Addition of liquids.
6. Proven quality of mix.
7. Material of construction.

One type of mixer that meets these criteria is a 4-ton paddle mixer. The paddle mixer can be fed by gravity from the weigh hopper in approximately 30 seconds. The mix time is 60 to 90 seconds, depending upon the number of ingredients and whether a liquid is to be added. The paddle mixer can have one to three discharge outlets. With three outlets, 90% of the blend is discharged directly by gravity without the aid of the mixing paddles. The mixer will take approximately 60 seconds to fully discharge. The total time for a cycle is 2 to 3 minutes.

Handling the Blended Product

The blended product is conveyed to trucks or bagging hoppers. The bagging hoppers are equipped with internal partitions (cells) to prevent segregation. The most common type of bagging system includes an open-mouth bagger, which is accurate and simple to operate, a sewing machine, and a bagging conveyor.

The major criterion for the design of the hoppers (bagging, product, or other) concerns the valley angles. The valley angle must be steep enough that materials will not hang up or build up on surfaces or in corners.

Construction Materials

The materials of construction are very important since fertilizer is very corrosive. Type 304 stainless steel should be used in critical areas of the blending tower system. All moving parts that come into contact with fertilizer should be made of stainless steel. The critical areas are the raw material distributor, weigh hopper, discharge gates, mixer, bagger, and bagging conveyor. Equipment that is fabricated of carbon steel should have a durable protective coating for prolonged service. The carbon steel is sandblasted to remove rust and mill scale, and then a good primer and a finish coat of paint are applied. The inside of the hoppers can be coated with a coal tar epoxy to prevent deterioration due to the fertilizer, especially in humid areas.

Compaction/Granulation Plants

Compaction/granulation has gained considerable attention in recent years because of the ability to use dry feed materials that are readily available in the world market. Compacting a mixture of the dry fertilizer materials produces a homogeneous granule that contains NPK just as does the product from conventional wet-granulation processes using a drum-type granulator. The drum granulator requires liquids such as ammonia, acid, and steam or water to be injected into the drum to cause the chemical reactions and liquid phase needed to form granules. The drum granulation method requires more trained personnel, more equipment, and a more elaborate system for recovering fumes and dust (usually some type of wet scrubber).

The design of a compaction plant requires establishment of the following parameters:

1. What is the required production rate?
2. What fertilizer materials will be used?
3. What are the humidity conditions or special weather conditions that may affect equipment operations?
4. What area is available for the compaction plant?
5. What are the materials available for construction?

The first two questions will determine the compactor size and whether multiple production lines are required. After the compactor size has been determined, the peripheral equipment can be designed. The assumption is made that the recycle fines-to-product ratio will be 1:1 to 2:1. If the recycle rate is known, then that rate can be used to determine the size of other peripheral equipment. If the rate is not known, a 2:1 recycle-to-product ratio can be used to determine the size of this equipment.

The discussion of the compaction/granulation plant design will include the following areas:

1. Bulk-blend system.
2. Material fed to compactors.
3. Compactor.
4. Size reduction and screening.
5. Dust collection system.
6. Electrical system.

Bulk-Blend System

The primary raw material feed system for a compaction/granulation plant is identical to that for the previously described bulk-blending plant. After the careful weighing of each raw material in a batch and proper mixing, the mixture is dumped into the continuous feed system for further processing before it enters the compactors.

Continuous Material Feed System for Compactor

The continuous material feed system consists of (1) equipment for metering the fresh feed and the recycle fines, (2) a double-shaft continuous pug mill mixer, and (3) drag chain conveyors. The fresh feed system also requires a mill to grind the previously blended fertilizer materials. The compactor requires feed material of relatively small particle size to assure good operation and a homogeneous compacted product. The mill is a double-row cage mill that will produce a material of which 80% is minus 20-mesh and 50% is minus 45-mesh. The fresh feed from the bulk-blending system is conveyed to the mill by a drag chain conveyor and a bucket elevator. The feed rate to the mill is controlled by a variable-speed drive on the drag chain conveyor. The feed rate can be regulated from the operator's panel in the control room. The mill is mounted over the fresh feed hopper. The structural steel supports must be designed to be free of vibration.

The design of the fresh feed hopper must take into account the fact that the material is fine and sometimes hygroscopic. This becomes very important when a blend is used that contains a large amount of urea. The valley angle of the hopper should be a minimum of 60°. The level indicators for the hopper should be of the motorized paddle type. The size of the hopper depends on the rate of compaction; it should be large enough to hold 15-30 minutes of production. If the fine material mixture (fresh feed) is sticky, the level of material in the fresh feed hopper is kept at a minimum to avoid plugging.

A screw conveyor at the outlet of the fresh feed hopper meters the material to the compactors. The screw conveyor is a volumetric type with a variable speed drive. The inlet of the screw is flared to allow the material to flood the inlet. The screw is tapered in diameter with the smallest diameter at the extreme feed end. The purpose of the tapered diameter is to obtain an even flow from the entire cross section area of the feed opening.

The recycle fines hopper should follow the same design criteria as the fresh feed hopper. The fines hopper is also equipped with the same type of variable-speed screw conveyor that is used on the fresh feed hopper.

The operator is able to control the rates of fresh feed and recycle fines from the operator's panel in the control room. The proportion of fresh feed to recycle feed should be kept constant. It should be readjusted only if the level controls for the bins indicate that a change in the proportion is required.

Before entering the compactor, the fresh feed and recycle feed are mixed continuously in a double-shaft pug mill mixer. Additives and/or water can be added to the material being mixed. Certain products require a small percentage of water to enhance the compacting capabilities. Care should be taken to avoid too much moisture because this can create additional problems in handling and operation.

After the pug mill, the material flow can be divided by means of a two-way valve to go to one or more compactors. The feed material is conveyed to the compactors by a drag chain conveyor. The compactors require a constant and consistent flow of material, and this is accomplished by the use of two outlets on the conveyor, one over the compactor and the other at the end of the conveyor to provide a continuous overflow of material. The overflow goes to the flake conveyor and is eventually recycled back through the system.

Compaction Machine

In selection of a compactor, the following parameters must be determined on the basis of the product to be compacted:

1. Tons per hour of material to be compacted (production rate).
2. Materials to be compacted.
3. Material characteristics and flowability of materials being processed.

The compactor comprises two counter-rotating rolls; the shaft assembly of one roller is stationary, and the other is movable. The movable roller is pressurized by means of a hydraulic system. The material is compacted as it goes through the rolls. The pressure that is applied depends on the material to be compacted. The counter-rotating rolls are force fed by one or more specially designed variable-speed screw feeders located immediately above the compactor rollers.

Size Reduction and Classification

The product is discharged from the compactor in the form of a large sheet or flake. This sheet must be reduced to a form that can be easily conveyed. This can be accomplished with a lump buster that will break the sheet into pieces of approximately 25 mm or less. The roughly broken sheet is then conveyed to a double-deck vibrating screen.

Selection of a screening system is crucial to the overall operation of the plant and final product sizing. The following design parameters must be established before a screen can be selected:

1. What are the physical properties of the material?
2. What type of screening is required – scalping, sizing, or fines removal?
3. What is the required feed rate?
4. What types of screening problems have been encountered with similar systems and materials – screen blinding, screen breaking, or the need for excessive rescreening?
5. What are the product size specifications?
6. What is the required screening efficiency?

A discussion of the critical design features of the size reduction and classification equipment follows.

Screens – In fertilizer plants, basically two types of screens are used: frame vibrated and cloth vibrated. Frame-vibrated screens are usually horizontal with a gyratory screening motion. Cloth-vibrated screens are mounted on an incline with a vibratory screening motion imparted directly to the screen cloth. The cloth-vibrated screen is most commonly used because it incurs fewer problems with blinding and requires little manual cleaning. The frame-vibrated screen will require some type of mechanical system such as bouncing balls (used in the Rotex® unit) to prevent blinding. A double-deck screen separates the material into oversize, onsize (product), and undersize fractions. The undersize (fines) is sent back to the recycle hopper and mixed with fresh feed and returned to the compactor. The product is conveyed to a bagging hopper or storage. The oversize is routed to a mill (crusher) and then returned to the screen.

Crushers – The type of mill or crusher used to reduce the particle size of the compacted sheet is determined by the amount of recycle generated and the product quality. Vigorous crushing will yield a strong granular product but will result in a high rate of recycled fines. The type of mill used depends on the hardness of the compacted sheet. If the compacted material is hard, then vigorous crushing is required. A compacted product containing urea and phosphates often is quite soft. The crushing equipment must handle the softer product more delicately.

Polishing Drum – A polishing drum is used in compaction/granulation plants to remove the sharp edges from the finished product. Removing sharp edges will decrease the amount of fines created during handling. After the product leaves the polishing drum, it needs to be rescreened to remove the fines. These fines are returned to the compactor. The product can be sent to storage or bagging.

Dust Collection System

A dust collection system is installed to control airborne dust in the plant. The system consists of a fan, cyclones or

baghouses, and air ducts. Major sources of dust are the hopper into which the payloader dumps the raw materials, the crushers, conveyor transfer points, the mixer, and the screens. The volume of air required depends on the number and types of collection points. The velocity of the air in the ducts must be kept at approximately 3,000 ft/minute. This velocity will keep the particles airborne until they get to the cyclone. The ideal design of the air system balances the pressure losses in the branch ducts to assure that the velocity (3,000 ft/minute) remains fairly constant throughout the system. The fan is sized on the basis of the volume of air required and the pressure drop through the ducts. The fan is installed on the clean-air side of the cyclone or baghouse.

Electrical System

Electrical systems in corrosive, dusty atmospheres can become major trouble areas if not properly designed. The electrical system for a fertilizer plant consists of a motor control center, control panels, and electrical wiring. The motor-control center includes safety disconnect switches, overload relays, and motor starter contactors mounted in a dust-tight enclosure. An enclosed dust-tight room with a positive pressure air purge should be provided for this center.

The control panel should provide the operator with a clear understanding of what is happening in the plant. This can be accomplished with a graphic display of the process and indicator lights showing which equipment is in operation and the position of two-way valves. Ammeters on the major pieces of equipment will also allow the operator to monitor the electrical load of the various motors and equipment systems. Controls to adjust the speed of conveyors that regulate the feed are also located on the operator's panel. The operator's controls should be mounted in an enclosure that meets the required dust-tight specifications.

If possible, all field wiring should be enclosed in polyvinyl chloride conduit. All junction boxes used in the plant should meet the dust- and water-tight enclosure specification and preferably be made of plastic. All wiring needs to be properly marked. This will prevent guesswork in the future as to wire and circuit identification.

D. M. Alt

The Manufacture of Fertilizers by Compaction/Granulation

Maurice O. Klein[1]

Abstract

First use of compaction/granulation in the fertilizer industry was for the manufacture of granular potassium chloride. About 40% of the world's granular potash supply is produced using this granulation technology. Compaction technology is also used to manufacture granular NPKs and other fertilizers. Parameters that affect the efficiency of the compaction/granulation process are related to feed characteristics, equipment design, and operating conditions. These parameters are presented and reviewed based on potash experience, and their application is extended to the manufacture of granular NPKs where applicable.

Introduction

Compaction/granulation is an important stage in the overall potassium chloride production/beneficiation process. It enables the producer to convert inventories of smaller size product to larger particle size product and at the same time upgrade the physical characteristics of the final product. On a smaller scale, compaction/granulation is also used as a stand-alone system to manufacture NPK fertilizers.

Since its introduction into the fertilizer sector in the 1950s, compaction/granulation technology has been improved considerably. Improvements came about with operating experience, better understanding of process fundamentals, improved equipment design, better materials of construction, and the introduction of computer-aided process control. As the name implies, compaction/granulation consists of two main stages, which are separate and distinct: (1) compaction and (2) granulation. Functionally interdependent, each stage operates on the basis of different premises. Compaction implies the agglomeration of particles under force to produce a densified and coherent sheet-like material referred to as flake. Granulation describes the dry milling (crushing) of flake into a prescribed size distribution range employing a screening step. Briquetting- and tabletting-type compaction implies the production of a dense and coherent product of predetermined shape and volume, for example, a charcoal or coal briquette or an aspirin tablet.

Compaction was developed in Europe in the second part of the nineteenth century in the search for an economic method to convert coal screenings into briquettes (1). Compaction/granulation of potash started in the 1950s as an economic alternative to the thermal process of sintering or partial melting to achieve a granular product (2). Currently, about 40% of the total world capacity of potash production is compacted; this amounts to about 5% of the world's total capacity of granular fertilizers (3). Examples of size ranges of potash produced in compaction/granulation circuits are illustrated in Table 1. Compaction/granulation of NPKs started in Europe in the mid-1960s as an alternative to melt- or slurry-type agglomeration and now amounts to about 1 million tpy. Compaction/granulation plants for potash have high throughputs and are used wherever potash is mined in significant quantities, as is the case in U.S.S.R., Canada, United States, England, Spain, France, Germany, Israel, Jordan, and Brazil. NPK compaction/granulation plants, which generally have smaller capacities, number over 32 worldwide. These plants are located in France, Guatemala, Portugal, Switzerland, United States, West Germany, the Philippines, and in other parts of the world.

Table 1. General Size Fractions of Potash (KCl) Produced in the Compaction/Granulation Process

KCl Product	Size (Tyler mesh)	K_2O Content (%)
Chiclets[a]	-1 +6	62
Granular	-6 +14	60
Coarse	-8 +28	60
Standard	-14 +65	60
Special standard	-35 +150	60

a. Industrial grade, no conditioning agent added.

1. Special Project Engineer, International Fertilizer Development Center (IFDC) – United States.

A schematic diagram of a general compaction/granulation circuit for potash and NPK is illustrated in Figure 1. In general, compacted/granulated products have higher specific and bulk densities and are of more irregular shape than those produced by melt- and slurry-type agglomeration.

To attain and maintain an efficient operation that also produces high-quality products, process parameters that affect the efficiency of compaction/granulation must be known and understood, monitored, and controlled. These parameters are generally related either to equipment design and operation or to the characteristics of feed to be compacted. This paper describes the effects of these parameters on compaction, dry milling (crushing), and screening with emphasis on potash production. Extrapolation of potash criteria to NPK production is also discussed.

Compaction

The basic design of a compactor is illustrated in Figure 2. The material enters (from feeders) between the two counterrotating rollers. One roller is located in a set of fixed bearings while the other is in a floating-bearing unit. The feed passing between the two rollers is progressively transformed from a loose to a dense state. This transformation is caused by the increasing combined pressure from the feeders and the rotating rollers. When adequate, the resultant pressure activates the interparticle binding forces, mainly van der Waals forces, to effectively produce a dense, cohesive, and competent flake.

As illustrated in the same figure, there are four distinguishable regions in the process of compaction. In region one, the material in the feeder exhibits its initial bulk density. The feeder conveys the material to region two where bulk density increases because of particle rearrangement and deaeration. In region two some slippage between the roll surface and the feed occurs. However, the pressure from the feeder is sufficient to cause the rolls to grab and convey the material into region three. The transition between region two and three is marked by the angle of nip where the frictional force between the roll and the feed, caused by the applied pressure, is sufficiently high to prevent slippage. The applied pressure increases as the angle of nip decreases, and reaches maximum as the angle

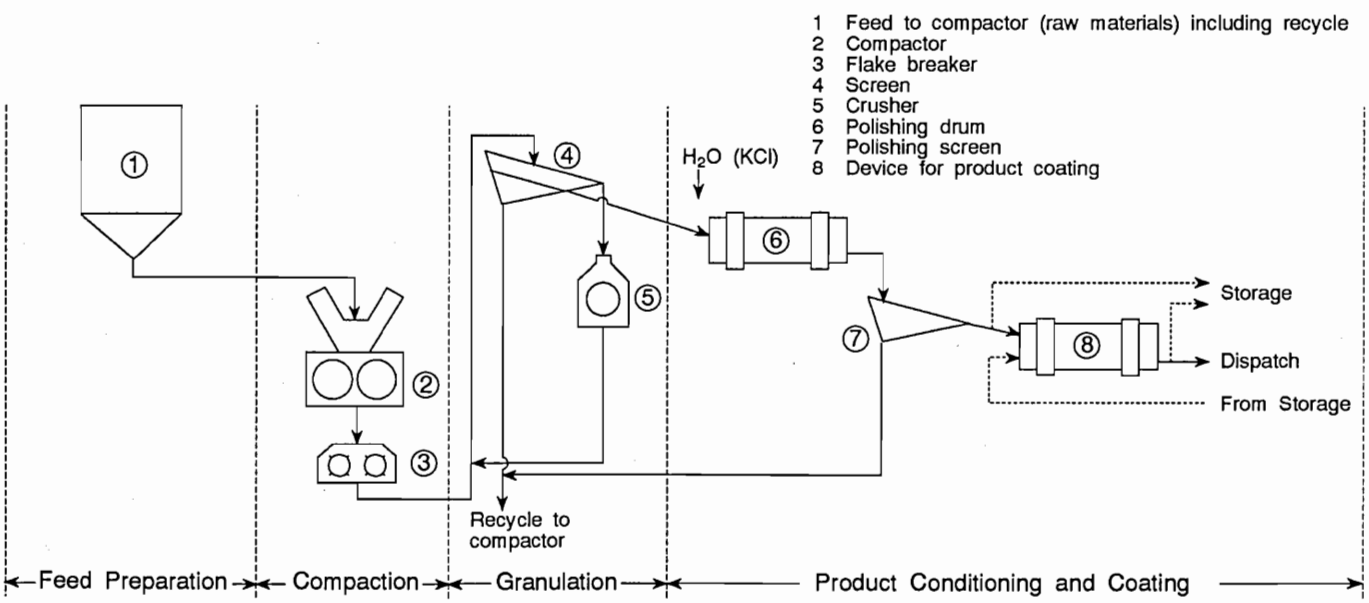

Figure 1. Typical Compaction/Granulation Circuit.

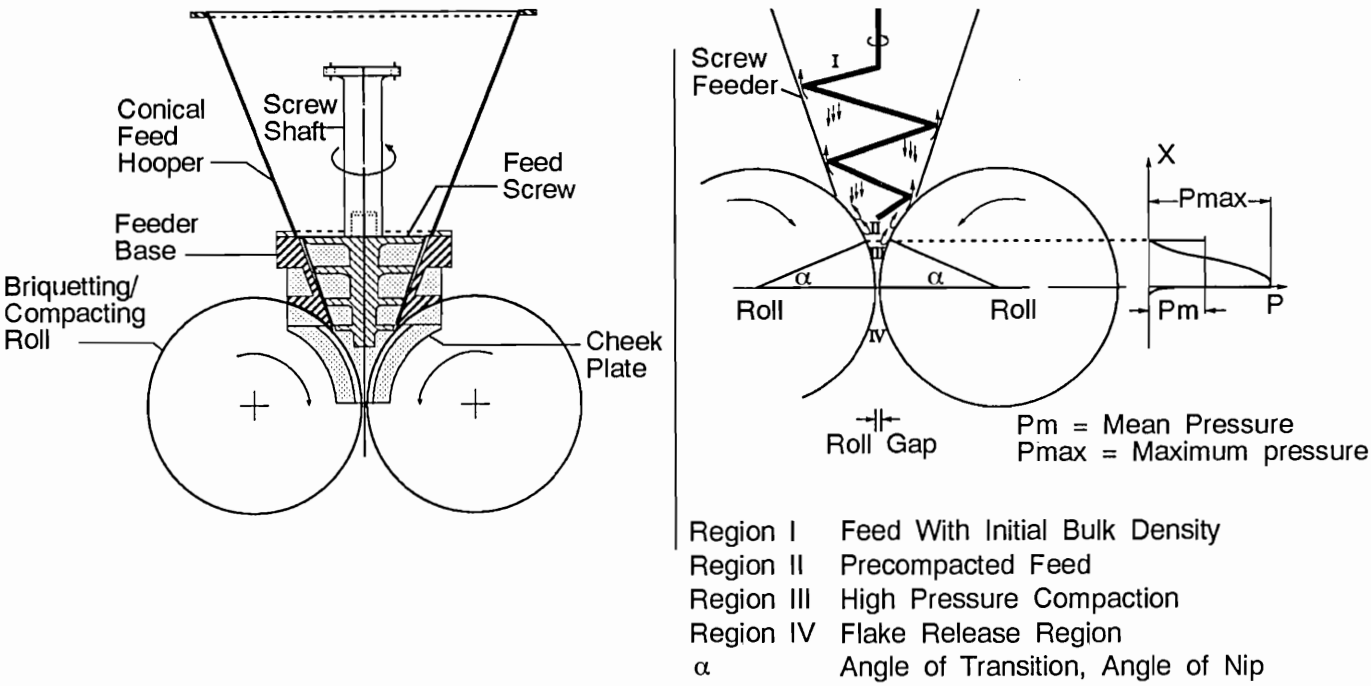

Figure 2. Schematic Illustration of Compactor System and the Feed Transformation Zones.

of nip approaches zero. Simultaneously, the interparticle relative slip decreases substantially as plastic and elastic deformations occur. At this point, the thickness of the flake is approximately the same as the gap between the two rolls, flake porosity is lowest, particles are tightly packed, and binding forces are effective. Region four is the flake release region where decompression of the flake occurs due to partial recovery of the stored elastic energy. The flake may self-destruct upon decompression due to entrapped air or other externally induced stresses. Figure 2 also shows the pressure behavior in these regions.

A significant factor in the compaction process is the magnitude of the angle of nip, which depends on the friction force developed between the feed material and the surface of the roll. It is, therefore, affected by equipment design and configuration and the flow characteristics of the feed (4). Smooth rolls have the distinct advantage of a lower manufacturing cost. However, smooth rolls induce lower nip angles than corrugated, waffled, or pocketed surfaces. In the potash industry, rolls with smooth surfaces have usually been installed. However, later, these units have been "roughed up" with single and double chevroning by means of bead welding. Chevroned surfaces increase flake production per unit energy as the "bite" of the roller improves, with minimum effect on the quality of the flake. The phenomenon of improved roller bite has been observed in the past when smooth roller surfaces became pitted.

The angle of the nip also establishes the compression ratio, which is defined as the ratio of the plane at the nip angle to that at the roll gap adjusted for leakage (4). Compression ratios range between 1.5 and 3 and are subject to the permeability of the material (5). In general, lower nip angles result in decreased compression ratios and lower throughputs.

Feeders affect the required angle of the nip. Feeders are responsible for part of the friction force opposing the slip at the roll surface, thus increasing the nip angle. Gravity and force-type feeders can be supplied depending on the feeding mechanism involved. A gravity feed system is shown in Figure 3. Gravity-type feeders are used mainly on free-flowing materials such as potash, where relatively low feed pressures are required and the amount of fines in the feed is small. A gravity-type feeder incorporates a

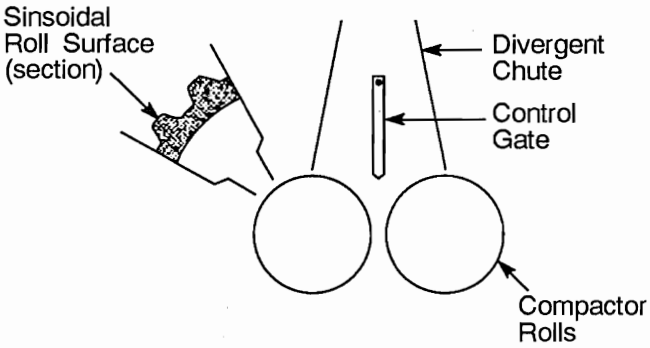

Source: Middleton, Cormode and Scotten (1983).

Figure 3. Gravity Feed System.

slightly diverging chute located above the rolls and an adjustable vertical feed control tongue. The position of the tongue and the height of solids in the feed chute control the feed rate to the compactor (6). When used with compactors that have wide rolls, the tongue may be curved to ensure a more uniform feed distribution over the roll's surface (7). Size classification can occur in gravity feeders and is undesirable because it adversely impacts the compaction process. Gravity feeders may be lined with stainless steel. In general, they require less maintenance due to lesser wear, consume less energy, and are relatively simple to operate when compared with force feeders.

Force feeders are also used on potash. More versatile than gravity feeders, force feeders are equipped with single or multiple screws. These screws may be positioned vertically, at an angle, or horizontally. However, only the first two configurations are commonly used with fertilizers. The angled configuration incorporates some of the head pressure from the feed material above and provides better maintenance access to the screw. Tapered screws deaerate and predensify the feed to the compactor. Moreover, when overlapping, they provide a better distribution of the feed over the surface of the roll. Force feeders facilitate automatic process control by regulation of the speed of the screws. Size classification in force feeders is avoided as the screws not only convey but also provide mixing of the material. Both gravity and force feeders are deaerated through ports connected to dust collection systems (7). The deaeration rate through these ports is controllable. Cheek plates, which prevent material leakage through the side of the rollers, are considered as part of the feeding system.

Modern compactors tend to have a larger roll diameter, which affects the compression ratio. The effect of larger diameter rolls and examples of roll dimensions are illustrated in Figure 4. For the same peripheral speed, a larger diameter roll will produce a denser flake provided the roll gap does not change. Moreover, larger diameter rolls and reduced circumferential speeds facilitate longer compaction time and better opportunity for deaeration of the feed, conditions that improve the quality of the emerging flake (7).

The length (width) of the roll obviously affects the production rate. Because the specific pressure of materials, which is a characteristic of the compacted particulates, is expressed in force per width of roll, the production is limited by the width of the roller, which in turn is limited by design and economic criteria (8). Narrow rolls facilitate higher compaction pressures but have a proportionally larger cheek-plate leakage ratio. Stationary and spring-loaded cheek-plates are used and adjusted to provide for good deaeration and minimum particulate leakage. In general, the feeder base and cheek-plate assembly must provide adequate deaeration to ensure the production of a competent flake.

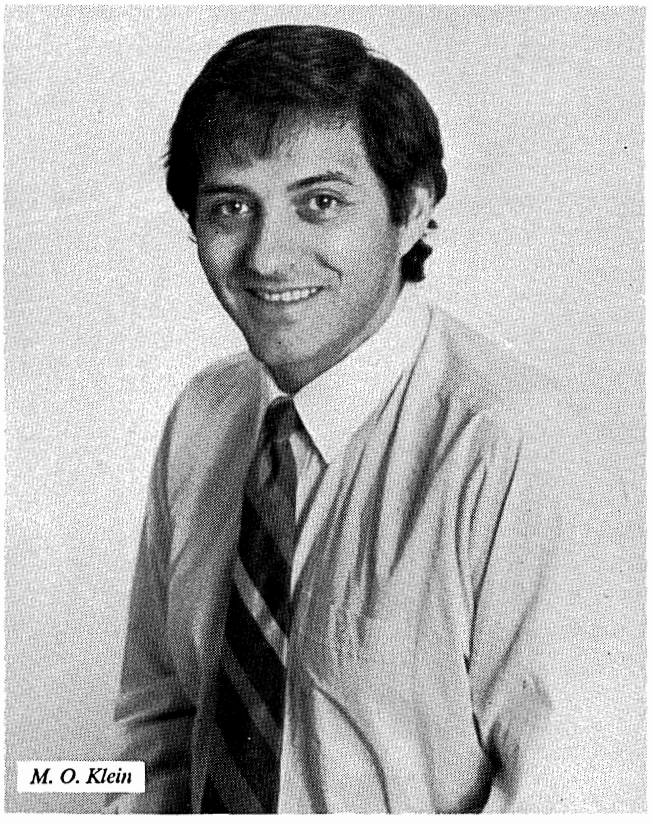

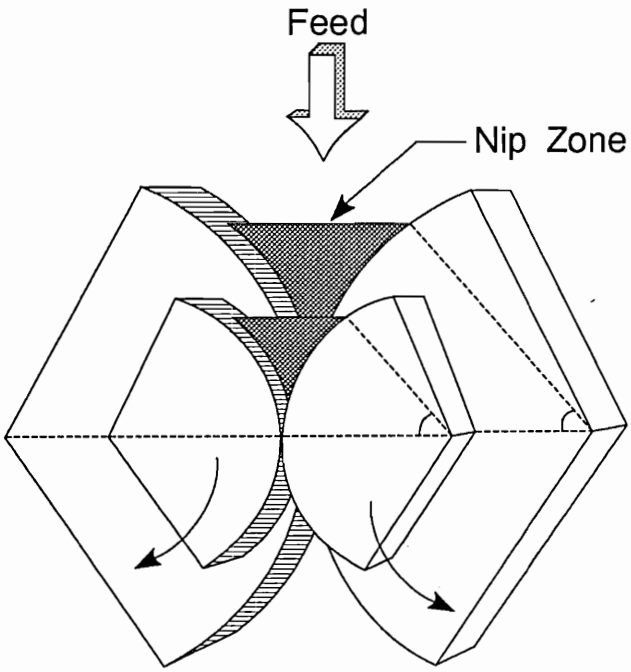

Examples of Roll Dimensions

Diameter (inch)	Width (inch)
22	28
24	24
28	28
39	50
40	50

Figure 4. Effect of Roller Diameter on Size of Nip Zone and Therefore Capacity of Unit (Assuming Same Nip Angle).

Reduced speeds combined with the use of rollers with larger radii result in lower energy input per tonne of flake during densification (9). Lower speeds also allow for better feed deaeration. Although peripheral roll speeds of about 0.7 m/s are recommended for potash, in some cases speeds of 1.2 m/s are maintained. Higher speeds facilitate increased throughput but can adversely affect the quality of the flake. The appearance of fines with the emerging flake occurs at increased speeds. Higher roll speeds may also be accompanied by audible noises as air is pushed through with the fragmented or porous flake, an indication of transient process conditions (5).

Feed Characteristics

Particle-size distribution and shape, brittleness, hardness, abrasion index, and feed density are important feed characteristics that must be considered. Moreover, feed temperature, traces of process reagents and conditioners, and binders may significantly affect the compaction/granulation process.

Material size distribution and particle shape affect the binding mechanism. A relatively wide size distribution is better because it allows for a closely packed arrangement of the particles in the feed. Likewise, best conditions are created when smaller particles are present in sufficient amounts to fill the voids between the larger particles. In general, compaction efficiency fluctuates with changes in the size distribution of the feed. Excessive excursions may cause material segregation in the flake. Deaeration problems become more acute as the portion of the smaller particles in the feed increases and hence results in a lower bulk density. Compaction can be problematic if the amount of fines present in the feed is substantial. Fines may present another problem, as in the case of potash, where the chemical (nutrient) content of the fines tends to be lower than that of the larger particles. To prevent undesirable variations in the chemical content of the potash fed to the compactor, certain process streams containing these fines are reprocessed through dissolution-recrystallization circuits to obtain larger crystals of significantly higher chemical grade. This method also improves the overall efficiency of the plant (10).

Irregularly shaped particles have larger specific surface area and better interlocking properties. However, particle shape of the non-recycled feed depends on the beneficiation process used. The natural potash crystal is highly regular, mostly flat, and cubic. This shape tends to be maintained during potash ore grinding and flotation from which the potash particles range in size from about 0.15 mm to 2.36 mm (11). Size-dependent, well-rounded and cubical crystals are produced in vacuum crystallizers. Crystals harvested from open pond crystallizers come in

all shapes and sizes that range between 0.15 mm and 2.1 mm (12). These are combined with recycle from screens at certain ratios to ensure a proper feed presentation to the compactor. For NPK the feed may be crushed to decrease the size of the particulates; this action also causes an increase in the contact area of the particulates while creating new uncontaminated contact areas that facilitate better binding. Urea is an example of a material whose compactability is improved after such crushing treatment.

Binders may compensate partially for lack of optimum size distribution or poor binding forces. In the past, water was often used as a binder for potash. This practice resulted in higher maintenance and operating costs and has since been largely discontinued. Water at about 0.25% is still being used on certain feeds. Certain types of binders also tend to dilute the chemical grade of the product. Urea, ammonium nitrate, or a mixture of ammonium nitrate and ammonium phosphate, when added in relatively small amounts, can be effective binders due to their low melting temperature or due to their thixotropic behavior (13). Various clays added at 0.1%-0.8% to the material fed to the compactor may be beneficial (14). In the case of potassium sulfate compaction, water is used at less than 2% by weight. It dissolves some of the potassium sulfate, which in turn recrystallizes during product drying to form the interparticle bridges (salt bridges) that promote the strength of the product (5). Lignosulfonates are also used as binders. Binders are added to the process where mixing can be adequately facilitated. In general, when use of binders is necessary, especially for processes at elevated temperature, primary binders such as water or brines containing feed material are preferred because they require low heat input for drying and simple handling equipment, and they interfere little with the chemical grade of the final product.

In the case of NPK fertilizers, one or more of the feed constituents may act as a binder. This is advantageous when working with fertilizers that are difficult to compact on their own. Moisture at less than 0.2% in the feed may be beneficial or counterproductive. It is beneficial with finer feed materials, but moisture may cause problems with certain feed formulations containing hygroscopic or thixotropic constituents. Urea in the presence of monocalcium phosphate in triple superphosphate (TSP) and single superphosphate (SSP) reacts with the chemically bound water causing problems during and after compaction. Moreover, the grip of the roll may be reduced if urea contained in the feed to the compactor melts as a result of the friction heat generated between the roll surface and feed (15). In general, the urea content in the feed should be limited to 30%, above which substantial adverse manufacturing problems occur (16). The chemical compatibility of the feed material is of paramount importance to avoid both short- and long-term adverse effects. These must be tested on a case-by-case basis to minimize problems during compaction, flake curing, granulation, screening, storage, and transportation.

Hardness and brittleness cause the feed material to behave differently when in the nip region where elastic and plastic deformations occur. Hard materials tend to deform due to plasticity. Materials of higher plasticity such as potassium chloride compact better than those of lower plasticity such as potassium sulfate. In the absence of plastic deformation, particulates break under pressure as release of stress occurs. Plastic and nonplastic deformation of particulates is shown in Figure 5. The hardness of the material affects the force required for compaction. Examples of the specific force required for various fertilizers are shown in Table 2. Examples of hard particulates are potassium sulfate and ammonium sulfate. The abrasion index dictates the selection of materials of construction for the rollers (5). The presence of silica significantly affects the magnitude of this index.

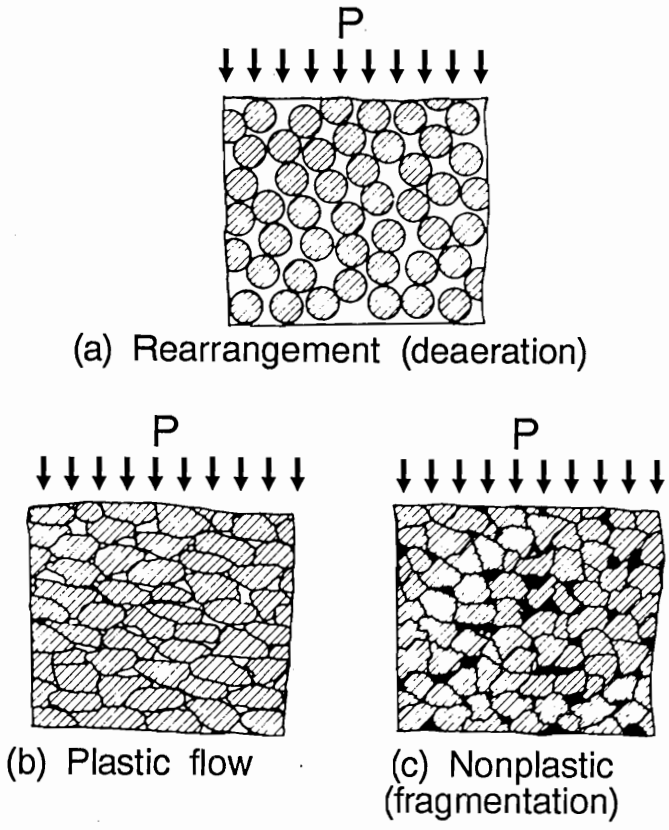

Figure 5. Particle Behavior During Compaction.

Table 2. Compaction Parameters for Selected Fertilizer Materials

Fertilizer	Feed Temperature (°C)	Specific Pressing Force[a] (kN/cm)	Water Content (%)	Feed Particle Size (mm)
Ammonium sulfate		100-120	0.5-1.0	<1.0
Calcium nitrate		60	Dry	<1.0
Calcium cyanamide		60	Dry	<0.4
Potassium salts:				
Potassium nitrate		100	0.5-10	<1.0
Potassium sulfate	>70	70	1.0	<0.5
Potassium chloride (60% K_2O)	>120	45-50	Dry	<1.0, max.
	20	70	Dry	3% <0.06
(40% K_2O)	90	60	Dry	<1.0
Urea		30-40	Dry	2-3 or <1.0
Mixed fertilizers with:				
No raw phosphate or Thomas slag		30-80	<1.0	<1.0
Raw phosphate or Thomas slag		>80	<1.0	<1.0

a. Based on 1 m diameter roller.

Source: Pietsch (17).

Temperature affects the plasticity of the feed to the compactor. It may also alter the cohesive, frictional properties and deaeration of the feed (18). Compaction force requirements decline with increased temperature of feed. For potash, about 28% less force is needed when using a feed at 120°-140°C than when using the same feed at 20°C (5). Actual feed temperatures in a potash plant may be as high as 170°C and between 120° and 130°C under normal operating conditions. Temperatures are maintained artificially high in order to flash off the residual flotation reagents (down to about 0.05 kg/tonne) from the potash crystals. Flotation reagents are surfactants that adversely affect the compaction process and therefore the competency of the flake. In some cases the use of chemical stripping of the flotation reagents with $NaNO_3$ is advocated (19).

Flake Production

The product from the compaction process is the flake. The potash flake thickness varies from plant to plant but normally is about 20 mm. Maintaining essentially a constant flake thickness contributes towards producing a quality flake (20). The flake is broken into smaller slabs immediately below the rollers (21). The flake is comminuted to accommodate the size constraint imposed by the conveying system, which normally consists of bucket elevators and screw conveyors. Pin-type breakers and coarse-tooth roll crushers are generally used for flake breaking. The curing of the flake improves its integrity. This practice results in a decreased amount of fines and improved product quality. The dynamic residence of the conveying system, mainly bucket elevators, provides less than 3 minutes of curing time in a typical potash mill. For NPK flake, the curing time requirements vary according to the formulation of the particular grade. A curing belt may be provided for the green flake to harden as it cools and as water in the flake evaporates. Curing may also be facilitated in an aerated holding bin designed to vent heat and moisture. The extent of the curing practice has a different effect for each formulation. In contrast to potash, the production of consistently good NPK flake is complicated by the need to manufacture a range of products each requiring somewhat different raw materials and process conditions. Figure 6 shows the effect of curing time on the final product's (KCl) resistance to abrasion.

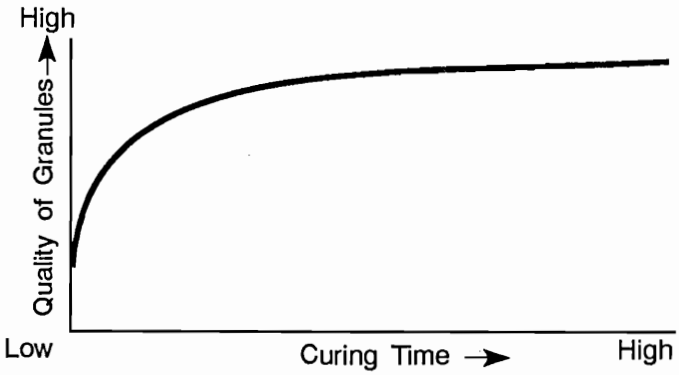

Figure 6. Effect of Curing Time.

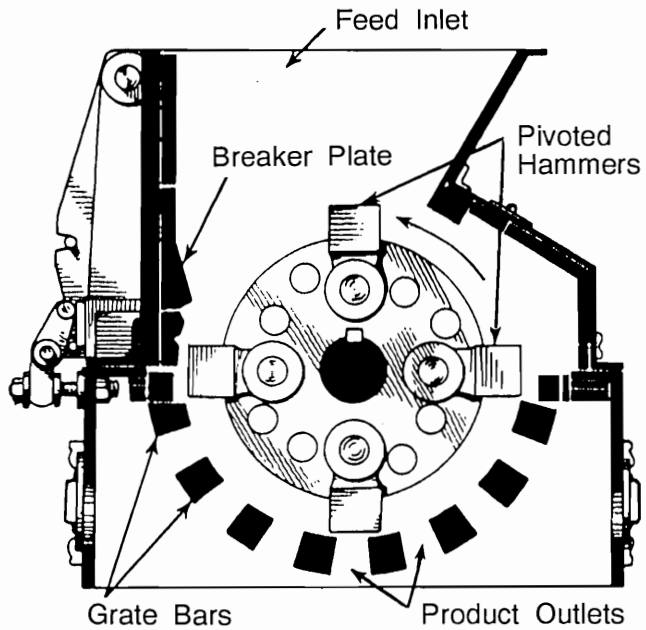

Figure 7. Illustration of a Typical Hammer Mill.

Granulation

Granulation circuits determine product yields, normally expressed in on-size product weight/tonne of flake. In addition, granulation circuits affect compactor performance as a result of the recycled fines from the screens and provide a certain degree of product quality control. Only the stronger granules survive the process, whereas the weaker ones disintegrate and are reprocessed. For potash, granulation consists mainly of primary and secondary crushers in a closed circuit with multideck screens. Such an arrangement facilitates the use of one type crusher best suited to handle the larger size feed with another type crusher best suited to produce the final product. At times, secondary crushers are staged. Primary crushers, such as hammer or cage mills, are impact-type and are fed with oversize material from the flake breakers and screens. Hammer mills have rapidly rotating hammers inside a cage, an arrangement illustrated in Figure 7. Cage mills consist of counter rotating cages as illustrated in Figure 8. Either impact or pressure-type crushers are used as secondary crushers. A pressure-type crusher is a roll crusher as illustrated in Figure 9. A roll crusher consists of two rolls, which may be grooved or toothed. The rolls are separated by the control gap.

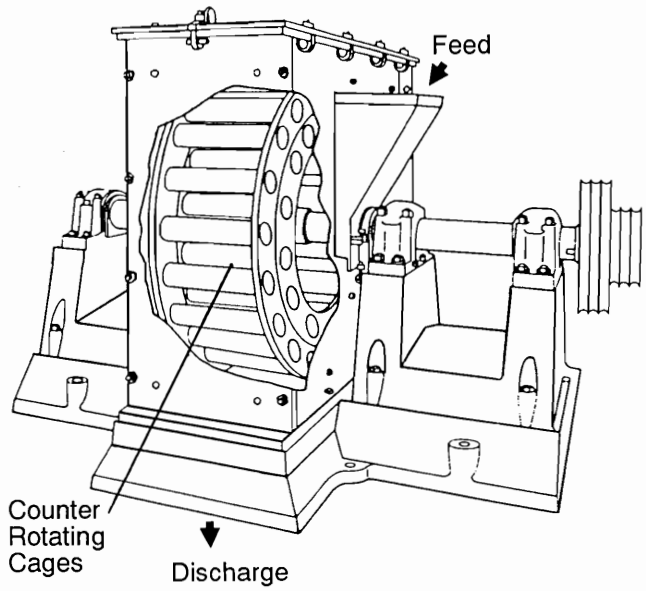

Figure 8. Illustration of a Typical Cage Mill.

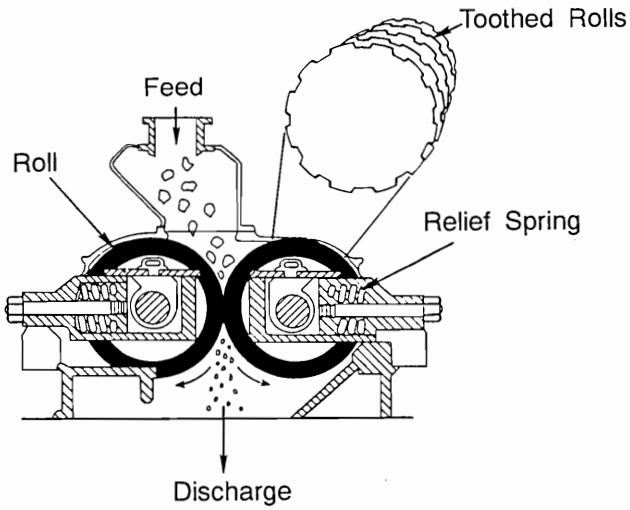

Figure 9. Illustration of a Typical Roll Crusher.

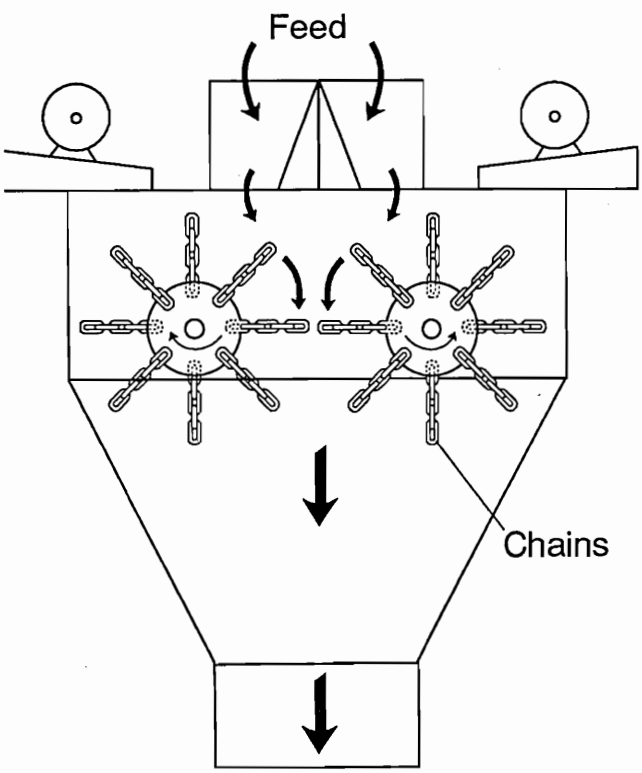

Figure 10. Illustration of a Typical Chain Mill.

NPK granulation circuits are similar to those used for potash and usually consist of only a primary crusher. Chain mills or roll crushers are used. Considered the simplest impact-type crushers, chain mills have chains attached to one or two revolving shafts as shown in Figure 10. The chains impact the incoming feed. Chain mills may require staging to obtain a higher percentage of on-size product. Buildup of material on the inside wall can become a problem with chain mills in service with adhesive-type fertilizers (22). However, present designs incorporate a self-cleaning action. Cage mills in an NPK compaction plant are used to comminute the feed to the compactor, such as urea and other prilled or large particle-sized materials, to between 60- and 100-mesh Tyler (16).

In general, the particle-size distribution produced by impact is quite wide and includes a high proportion of fines. To maintain an optimum size distribution, impact mills are fitted with variable-speed drives to adjust the rotational speed for a given set of operating conditions. Hammer mills and cage mills require high velocities since most of the crushing is due to the kinetic energy transferred to the impacted particle. Similarly, the speed of cages and their pin (impact bar) spacing is adjusted for a specific discharge-size distribution. In contrast, roll-crusher discharge contains a smaller portion of fines, which are produced by splintering and attrition. The discharge from a compression type crusher is controlled by the setting of the gap. A more closely graded product can be obtained by altering the design shape of the crusher teeth (23). Evaluation of circuits using roll crushers indicates higher yields than from those circuits equipped with impact crushers. Replacement of impact crushers with adequate roll crushers in a secondary-crushing circuit for potash could substantially increase yields of product between 6- and 14-mesh Tyler (11). Moreover, current roll crushers are sturdier and more maintenance free than previous designs (24). Roll crushers are not always suited for soft and adhesive materials. Packing instead of crushing may occur. This can be minimized with a low particle reduction ratio per stage and a regulated feed (25). The decision to use roll crushers for NPK compaction/granulation should be adequately addressed when dealing with changing quality of flake as well as rate of throughput.

Continuous optimization of crusher performance is demanding. The task becomes more difficult when both flake throughputs and flake characteristics change frequently. This is the case in NPK manufacture, particularly when existing crushers are overloaded due to lack of sufficient crushing capacity and when conditions of high reduction ratios prevail (15). An example of the size distribution of screened NPK fed and discharged from a chain crusher is illustrated in Table 3.

Gyratory screens with rectangular-shaped mesh openings are normally used for potash. An example of size fractions produced by these screens consists of (1) oversize material larger than 3.7 mm which is directed to a crusher, (2) product-size material between 1.18 mm and 3.7 mm

Table 3. **Size Distribution of Feed and Discharge of a Chain Mill in an NPK Compaction Plant**

Size (Mesh Alternate)	Feed (%)	Discharge (%)
¼	74.6	25.7
4	81.8	36.7
6	95.1	58.4
10	99.0	76.3
12	99.4	95.0
14	99.7	96.5
16	99.8	99.6
18	100.0	100.0

Source: Swisher and Rodriguez (16).

which is directed to a conditioning device, and (3) undersize material less than 1.18 mm which is normally recycled to the compactor bin (26).

During potash granulation and screening, the circuits are sampled on a regular basis to monitor the quality of the product and to ascertain the operating efficiency of the process equipment. The samples are collected either with automatic samplers or manually. Likewise, the samples are analyzed for size either by the operating personnel in designated areas of the plant or by laboratory personnel.

Product Treatment

To further improve the quality of the product, the on-size potash particles are quenched, dried, and passed through a polishing screen. Quenching consists of wetting the particles with water or brine either by direct spraying of liquid followed by drying or by mixing wet and dry streams and then drying. For potash, the water content added is a maximum of about 5% with norms around 1%. Screw conveyors are used for mixing. After wetting, the product is dried in a rotary drum-type or fluid-bed dryer at a temperature as high as 200°C. During the quenching stage, the sharper corners of the particles break off due to collision between particles or between particles and equipment. At the same time, a shell of dissolved salt envelops the particle. The shell makes the particle more resistant to the abrasion forces of handling. After the quenching step, the product is passed over a polishing screen to remove the fines. Depending on plant design, the product may be cooled ahead of the polishing step. Once through the polishing step, the product is either conveyed to storage or to loading facilities. Prior to dispatch, potash is treated with amines and oils. Amines depress the caking tendency of potash during transportation and storage. Oils prevent the formation of dust clouds at handling points. Dust particulates adhere to the larger particles, which are coated by an oil film. To ensure that only on-size material is dispatched, the product is passed through a scalper screen and an air classifier prior to loading (27).

Unlike the treatment used for potash, the use of water and high temperature drying on NPKs is limited by the properties of the products being manufactured. Where used, NPK product treatment usually consists of a conditioning drum and a polishing screen. Oil- and wax-type conditioners may be added to the products as dedusting agents.

Product Quality Monitoring and Control

For potash, routine programs of product quality monitoring and control are in place to ensure that compacted and other products leaving the plant meet established specifications. Samples are collected on an hourly, daily, or even monthly basis and analyzed for size distribution, degradation, dusting, chemical content, and process reagents, using standard and site-specific procedures. A shipment is cleared when the product meets or exceeds the established specifications. Composite samples of each shipment are kept on site for long periods in case disputes or questions arise regarding the quality of the product in a particular shipment. To remove fines that may be generated by degradation during handling, product may also be rescreened prior to leaving strategically located warehouses remote from the mine. Improved product quality and increased monitoring is due largely to the ever-increasing competition among producers for a limited market. A typical product specification for a Saskatchewan potash producer is illustrated in Table 4.

Conclusion

Since their introduction into the fertilizer sector, compaction/granulation circuits have improved progressively to yield a more efficient operation and a better quality product. The improvements are due to the conscious efforts of all involved, including process engineers and operating personnel, in improving the operating efficiency of each component in the circuit. Those in the maintenance department continuously seek to improve the reliability of process equipment and maintenance methods, while design engineers continue to optimize the design of the compactors, crushers, and peripheral units.

Table 4. **Typical Product Specifications for a Potash Producer in Saskatchewan, Canada**

Tyler Mesh	Mesh Opening	Granular Range	Granular Typical	Coarse Range	Coarse Typical	Standard Range	Standard Typical	Special Standard Range	Special Standard Typical
		(% retained on the screen)							
6	3.36	4-12	8						
8	2.38	50-75	60	5-15	8				
10	1.68	80-95	90	25-45	30				
14	1.19	93-99	98	65-90	80	208	5		
20	0.84	98-100	99	93-98	96	25-40	30		
28	0.60			97-100	98	55-75	65	2-10	5
35	0.42					80-90	85	10-30	20
48	0.30					98-98	95	35-60	50
65	0.21					96-100	98	60-75	70
100	0.15							80-95	90
150	0.10							85-97	95
200	0.07							95-100	98

Chemical Specifications

Component	Granular	Coarse	Standard	Special Standard
	(% by weight)			
K_2O	60.60	60.70	60.70	60.40
KCl	96.00	96.20	96.10	95.71
K	50.30	50.43	50.37	50.19
NaCl	3.33	3.06	3.20	3.52
Na	1.31	1.20	1.26	1.39
Cl	47.77	47.71	47.76	47.74
Mg	0.05	0.04	0.08	0.08
Ca	0.03	0.03	0.03	0.03
SO_4	0.07	0.06	0.07	0.05
H_2O	0.07	0.08	0.08	0.09
H_2O insoluble	0.41	0.47	0.41	0.45
Minimum guarantee:				
K	50.0	50.0	50.0	50.0
K_2O	60.0	60.0	60.0	60.0
Bulk density, lb/ft^3	70-75	70-75	70-78	75-80
(kg/m^3)	(1,120-1,200)	(1,120-1,200)	(1,120-1,250)	(1,200-1,280)
Angle of repose	32°	32°	33°	33°

Computer-aided process control providing the operating personnel with timely on-line information on process conditions, more stringent controls on product quality, less loss of production time, and a safer and improved working environment have resulted in further improvements of the compaction/granulation circuit. Equally important has been the contribution of the sciences, which continue to provide solutions to many of the problems that were encountered with roll presses in earlier stages of development. Development of computer process simulation for compaction/granulation circuits, total quality control programs, and training have also had a positive impact on improving compaction/granulation efficiencies. The throughput of potash compaction/granulation circuits

installed more than 20 years ago has more than doubled in some cases while circuit efficiencies (product yield) have improved generally from about 30% to 40%.

Wherever possible, the experience gained in potash compaction/granulation has been generally applied to the manufacture of NPK. Considerable differences in the two applications remain. Compaction/granulation circuits for potash are designed to produce continuously for the global market as opposed to those for NPK, which are generally designed to meet a regional market demand. Compactors employed in potash may produce as much as 100 tph of flake each (9). Potash compaction/granulation circuits often produce more than 250,000 tpy of granular product and an additional 100,000 tpy as coarse product (26); those of NPK produce about 50,000 tpy of product (28). Furthermore, compaction/granulation circuits for potash are integrated into the overall beneficiation process. As shown in Figure 11, they are situated in the back-end of the overall process and are maintained to match on the one hand the requirements of the upstream process and on the other the market demand for the particular product size, especially when on-site warehouse capacity is limited. In some instances, spare compactors are incorporated in these circuits and are activated in case of equipment failure or during scheduled maintenance work.

In general, compaction/granulation circuits for NPKs are nonintegrated and operate as stand-alone systems. This feature may also be extended to potash circuits during extended periods of plant shutdown, when, in response to market demand, products in the smaller size range may be reclaimed from the onsite warehouse and reprocessed into a larger size range product.

The material fed to the compactor in a compaction/granulation circuit for potash generally consists of one component that is relatively uniform. Potash is a stable compound and does not present significant problems with chemical compatibility and high temperatures. It does not behave thixotropically, nor is it hygroscopic. Some differences exist in particulate shape, size, and origin. These differences are overcome by proportionally mixing the various streams to obtain an advantageous size distribution in the material fed to compactors. If necessary, excess fines may be diverted for wet reprocessing in some

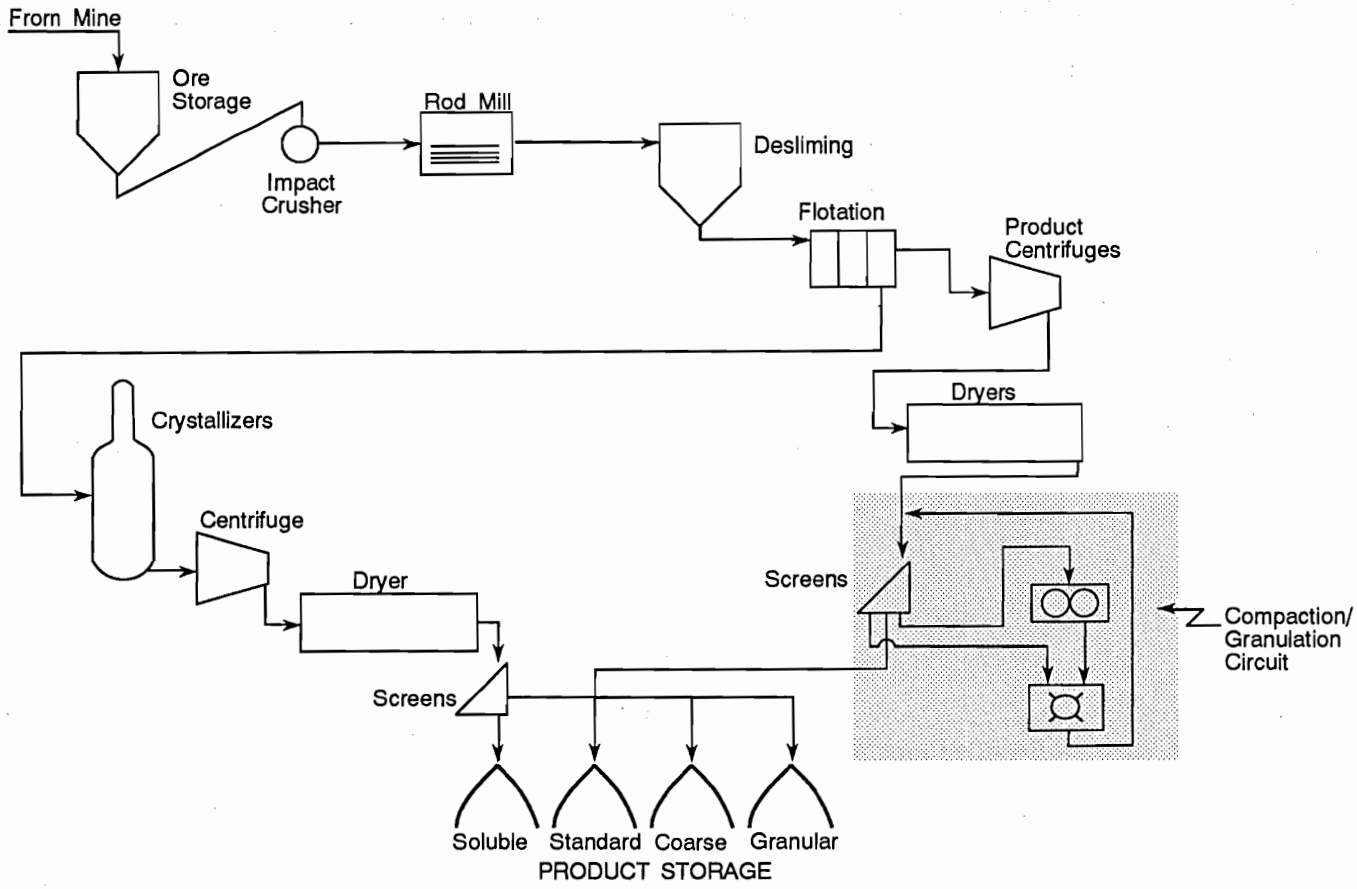

Figure 11. General Flowsheet of a Conventional Potash Beneficiation Plant.

cases. By and large, the quality and rate of feed to the compactors is predictable and controlled to obtain a flake of improved quality, which can also be efficiently granulated to produce a good quality product.

In contrast, in the manufacture of NPKs the material fed to the compactor may vary with each product manufactured. The chemical characteristics and the compatibility of certain feed constituents limit their use below the level at which they become problematic. Such is the case with urea, which is hygroscopic and thixotropic. Alternatively, substandard feedstock (material which from a quality standpoint would not be suitable for direct sale) may be used, often resulting in a substantial saving in operating costs. Compared with potash, NPK compaction/granulation plants, in general, produce substantially smaller quantities of products having many different formulations (components).

For three decades, compaction/granulation circuits have been an integral part in the manufacture of granular fertilizer. They offer a proven and economical alternative for size-upgrading of fertilizers in the production of potassium chloride, potassium sulfate, NPKs, and ammonium sulfate (29). Production economics for NPK compaction/granulation tend to favor regional markets larger than 25,000 tpy (30). Compaction/granulation technology must be properly considered in comparison with other granulation alternatives that may be used to meet the specific needs of a regional market.

References

1. Klein, M., and W. Popiel. 1985. "Agglomeration in the Fertilizer Industry," IN *Potash Technology 1983*, R. M. McKercher (Ed.), Pergamon Press, Willowdale, Ontario, Canada.
2. Noyes, R. 1965. Potash and Potassium Fertilizers, Chemical Process Monograph Series, Park Ridge, New Jersey, U.S.A.
3. Schultz, J. J., and J. R. Polo. 1988. "The Role of Agglomeration in the Fertilizer Industry," IN *NPK Fertilizer Production Alternatives, Proceedings*, J. J. Schultz and E. D. Frederick (Eds.), IFDC-SP-9, International Fertilizer Development Center, Muscle Shoals, Alabama, U.S.A.
4. Von Dreele, C. W. 1973. "Roll Type Compacting and Briquetting," *Mineral Processing*, July.
5. Zisselmar, K. 1988. "Compaction/Granulation of Fertilizers," IN *NPK Fertilizer Production Alternatives, Proceedings*, J. J. Schultz and E. D. Frederick (Eds.), IFDC-SP-9, International Fertilizer Development Center, Muscle Shoals, Alabama, U.S.A.
6. Johanson, J. R. 1977. "Use of Theory for Design and Selection of Roll Presses for Agglomeration and Compaction," IN *The Institute for Briquetting and Agglomeration (IBA) Conference Proceedings*.
7. Pietsch, W. 1987. *Roll Pressing*, Second Edition, Powder Advisory Centre, London, England.
8. Lupin, S. M. 1984. "Techno-Economics of Compaction/Granulation Process," *Fertilizer News*, December.
9. Pietsch, W. B. 1983. "Modern Equipment and Plants for Potash Granulation," IN *Potash Technology 1983*, R. M. McKercher (Ed.), Pergamon Press, Willowdale, Ontario, Canada.
10. Klein, M., and A. Roy. 1990. "Potassium Chloride: Aspects of Extraction Technologies," Paper presented at the Second Workshop on West African Agrominerals, February 27-March 1, 1990, Lomé, Togo.
11. Hogan, H. 1983. "A Review of Crushing Systems Used in the Compaction Plant at PCS Mining, Lanigan Division," IN *Potash Technology 1983*, R. M. McKercher (Ed.), Pergamon Press, Willowdale, Ontario, Canada.
12. Goldsmith, E. L., and M. O. Klein. 1989. "Potassium Chloride Crystallization in Saskatchewan," IN *Proceedings of 2nd International Conference on Separation Science and Technology*, M.H.I. Baird and S. Vijayan, (Eds.), Hamilton, Ontario, Canada, October 1-4.
13. Brown, G. G. 1967. "Process for Compacting Muriate of Potash," British Patent #1076682.
14. Jackson, H. E., A. G. White, and C. R. Kirby. 1976. "Compaction of Potash," Canadian Patent No. 988315, May 4.
15. Sutter, A. 1990. "Production and Marketing of Compacted NPKs in Switzerland: Rationale and Results," IN *Proceedings: Supplying Quality Multinutrient Fertilizers in the Latin American and Caribbean*

Region–Emphasizing Bulk Blending and the Complementary Role of Granulation, J. J. Schultz and E. D. Frederick (Eds.), IFDC-SP-14, International Fertilizer Development Center, Muscle Shoals, Alabama, U.S.A.

16. Swisher, M. A., and C. Rodriguez. 1988. "Compaction of NPK Fertilizers for the Guatemalan Market," IN *Proceedings of the 35th Annual Meeting, Fertilizer Industry Round Table*, November 14-16, Baltimore, Maryland, U.S.A.

17. Pietsch, W. B. 1989. "History, Application, and Present Status of Mixed Fertilizer Granulation by Compaction," IN *Proceedings of Fertilizer Latin America Conference*, Caracas, Venezuela, The British Sulphur Corporation Ltd., London, England.

18. Johanson, J. R. 1979. "Two-Phase-Flow Effects in Solids Processing and Handling," *Chemical Engineering*, January 1.

19. Medemblik, L. 1983. "Compaction of Potassium Chloride in the French Potash Industry," IN *Potash Technology 1983*, R. M. McKercher (Ed.), Pergamon Press, Willowdale, Ontario, Canada.

20. Johanson, J. R., and A. F. Banks. 1975. "Achieving Higher Production Rates Using Existing Roll Presses for Potash," IN *The Institute for Briquetting and Agglomeration (IBA) Conference Proceedings*.

21. Middleton, A. S., D. A. Cormode, and J. E. Scotten. 1983. "Compaction Plant Expansion Process Design and Equipment Selection at Cominco Ltd.," IN *Potash Technology 1983*, R. M. McKercher (Ed.), Pergamon Press, Willowdale, Ontario, Canada.

22. Norton, M. M., B. R. Parker, and J. R. Stumpe. 1979. "Review of Size Reduction and Classification in Fertilizer Processes," Paper presented at the Annual Meeting of the American Chemical Society, Washington, D.C., September 9-14.

23. Ratcliffe, A. 1972. "Crushing and Grinding," *Processing*, July.

24. Eatock, B. 1985. "Advances in Potassium Mining and Refining," IN *Potassium in Agriculture*, American Society of Agronomy, Madison, Wisconsin, U.S.A.

25. Anon. 1980. *Crushing Practice and Theory*, Allis Chalmer's Bulletin 07-R-8073-02.

26. Patterson, M. A. 1983. "Contemporary Design of Add-On or Stand-Alone Compaction Facilities," IN *Potash Technology 1983*, R. M. McKercher (Ed.), Pergamon Press, Willowdale, Ontario, Canada.

27. Banks, A. F. 1978. "Milling of Potash in Canada," CIM Proceedings.

28. Chupungco, E. J., and W. B. Pietsch. 1990. "South-East Asia's First Fertilizer Compaction Plant," Phosphorus and Potassium No 165, The British Sulphur Corporation Ltd., London, England.

29. Mickus, J. C., and C. Bowen. 1988. "Various Methods for Producing Granular Ammonium Sulfate From Byproduct Fines," IN *Proceedings of the 35th Annual Meeting, Fertilizer Industry Round Table*, November 14-16, Baltimore, Maryland, U.S.A.

30. Anon. 1986. "Bulk Blending and Compacting of Fertilizers," *Agro Chemical News in Brief*, Fertilizer Advisory, Development, and Information Network for Asia and the Pacific, Vol. IX, No. 2, April.

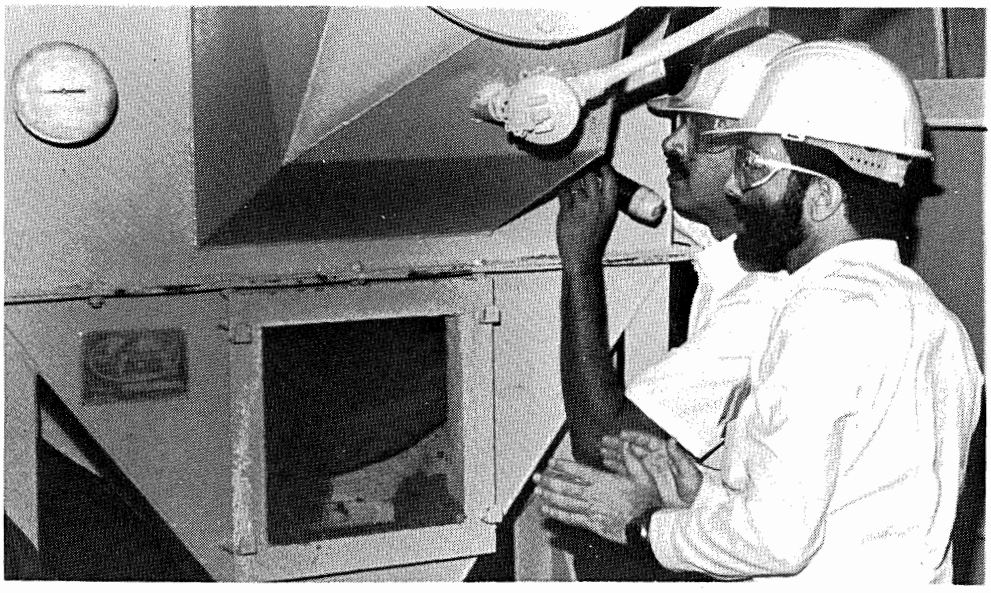

Pilot-Plant Demonstration of Selected Operating Parameters for the Production of Granular Urea-Based NPKs

George W. Bolds III[1]

Introduction

The difficulties involved in producing granular NPK fertilizers are greatly increased when the formulation contains 5% or more urea. The main problems encountered with the urea-containing products are increased hygroscopicity, adduction, and sensitivity to heat. Many plant designers and producers have failed to pay proper attention to these dangers and as a result have suffered operational difficulties.

The purpose of the IFDC pilot-plant operations conducted during the workshop was to demonstrate the production of urea-based NPK granular fertilizers under correct and incorrect conditions. The demonstrations conducted under correct conditions showed that granular urea-based NPK fertilizers can be produced successfully when the parameters required by the presence of urea are followed. The demonstrations using conventional ammonium phosphate-based operating parameters were designed to show the problems that are usually encountered when attempting to produce urea-based fertilizers under such conditions.

Production Formulations

The fertilizer grade chosen for the pilot-plant demonstrations was a 17-17-17-2MgO, a typical grade produced and used in the tropics. Two formulations were used to produce this grade (Tables 1 and 2). The particle-size specifications for the solid raw materials fed to the granulator are shown in Table 3. Both formulations contain 30% urea (fed as an anhydrous melt), potassium chloride, sulfate of potash-magnesium (SPM), and powdered monoammonium phosphate (MAP). The second formulation (Table 2) differs from the first in that a portion (20%) of the P_2O_5 is supplied by phosphoric acid sprayed onto the bed of material in the granulator and

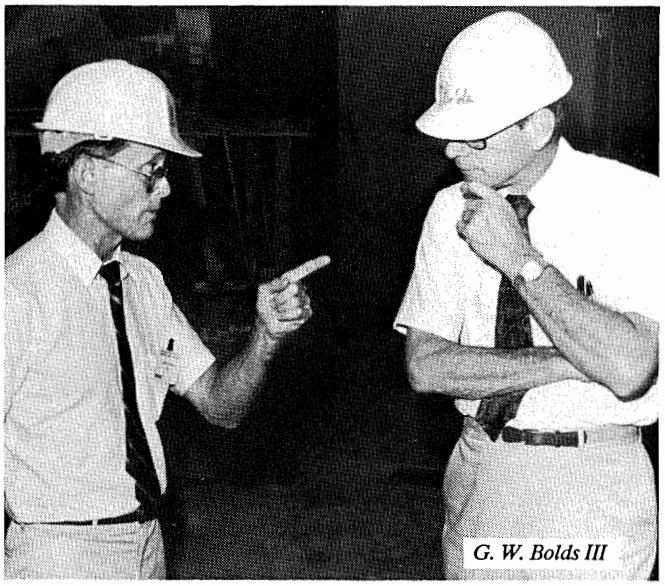
G. W. Bolds III

then ammoniated to an NH_3:H_3PO_4 mole ratio of 1.0. The remainder of the P_2O_5 (80%) is obtained from powdered MAP. This formulation adjustment demonstrates one method for improving the plant water balance by substituting phosphoric acid for water in the scrubber and recovering the scrubber liquor and its P_2O_5 value in the process. This, of course, assumes that ammonia and phosphoric acid are available at the plant site.

Demonstration Objectives

The three pilot-plant demonstrations were designed to show (1) well-controlled production when using 30% urea in the formulation; (2) the effect of increasing the dryer exit gas temperature from the optimum value of about 70°C to 93°C, which led to melting (stickiness) in the dryer and necessitated a plant shutdown; and (3) the effect of switching from cool to hot screening (bypassing the process cooler and routing the dryer discharge material directly to the screens), which led to blinding of the screens due to temperature-induced plasticity of the fertilizer material. The problems highlighted by these demonstrations are those most often encountered in commercial operations.

1. Pilot Plant Operations Coordinator, International Fertilizer Development Center (IFDC) – United States.

Table 1. Production Formula for Urea-Based NPK 17-17-17-2MgO

Formula C-1 – No Phosphoric Acid or Ammonia

Material	Feed Basis	Nutrient Content			
		N	P_2O_5	K_2O	MgO
	(kg/t product)	(kg/t product)			
Urea (melt)	300	138			
Powdered MAP (10-49-0)	350	35	171		
Potassium chloride (0-0-60)	243			146	
Sulfate of potash – magnesium (0-0-22-18MgO)	112			24	20
Water evaporation[a]	(-)5	—	—	—	—
	1,000	173	171	170	20

a. In addition to water contained in the raw materials, additional water is added to the granulator in the form of steam used to control granulation.

Table 2. Production Formula for Urea-Based NPK 17-17-17-2MgO

Formula C-2 – With Phosphoric Acid and Ammonia

Material	Feed Basis	Nutrient Content			
		N	P_2O_5	K_2O	MgO
	(kg/t product)	(kg/t product)			
Urea (melt)	304	140			
H_3PO_4 (50% P_2O_5)[a]	68		34		
NH_3[a]	9	7			
Powdered MAP (10-49-0)	279	27	136		
Potassium chloride (0-0-60)	243			146	
Sulfate of potash – magnesium (0-0-22-18MgO)	112			24	20
Water evaporation[b]	(-) 15	—	—	—	—
	1,000	174	170	170	20

a. Ammonia and phosphoric acid fed directly to granulator. NH_3:H_3PO_4 mole ratio of 1.0.
b. In addition to water contained in the raw materials, additional water is added to the granulator in the form of steam used to control granulation.

Table 3. Particle Size of Solid Raw Materials Fed to the Granulator

Tyler Screen	Solid Raw Material MAP	KCl	SPM[a]
	- - - - - - - (% retained) - - - - - - -		
10 (1.70 mm)		1.0	
14 (1.18 mm)		10.1	
20 (0.85 mm)		40.0	37.2
28 (0.60 mm)	8.2	67.0	63.3
35 (0.43 mm)	18.7	83.2	80.2
48 (0.30 mm)	38.3	92.2	90.6
65 (0.21 mm)	64.7	100.0	95.2
100 (0.15 mm)	83.8		96.9
150 (0.11 mm)	93.8		97.8
Pan	100.0		100.0

a. Sulfate of potash-magnesium.

The most serious problem encountered in plants not specifically designed for urea-based NPKs is usually related to screening. This problem is most typical in diammonium phosphate (DAP) plants that normally do not have a process cooler to cool the material before screening. This problem is very difficult to resolve since the retrofitting of a process (throughput) cooler in an existing plant is usually not practical. A throughput cooler offers several advantages in the production of urea-based NPK fertilizers including (1) further gentle (low temperature) drying of the material, (2) additional time to complete the crystallization (hardening) of the material to facilitate screening and crushing, and (3) an increase in the critical relative humidity (CRH) of the material by lowering the material temperature. In many plants, other factors, such as high humidity and the lack of plant dehumidification, add to the difficulties of producing granular urea-based NPK fertilizers. A brief discussion of the demonstration results follows.

Base-Case Demonstration Using Optimum Operating Parameters

The first pilot-plant demonstration (Test 1) was performed using the established parameters for good urea-based NPK operation. The 17-17-17-2MgO product was produced according to the formula and conditions shown in Tables 1 and 4, respectively, and the plant equipment configuration shown in Figure 1. The dryer temperature was carefully controlled and the material was cooled before screening. Operation according to this mode proceeded smoothly and without problems.

Table 4. Operating Conditions – 17-17-17-2MgO Urea-Based NPK Granulation

	Demonstration Test 1 Optimum Mode	Test 2 Increased Dryer Temperature	Test 3 Hot Screening Mode[a]
Granulator			
Temperature, °C	48	58	69
Recycle ratio[b]	5.0	6.1	4.8
Dryer			
Outlet air temperature, °C	71	93	73
Material discharge temperature, °C	68	75	72
Process cooler			
Outlet air temperature, °C	55	50	-
Material discharge temperature, °C	49	49	-
Product			
Free moisture, %	0.4	NA[c]	0.3
Granule crushing strength, kg/granule	2.0	NA[c]	NA[c]

a. Refer to Table 2 for production formula. Tests 1 and 2 made with production formula shown in Table 1.
b. Weight ratio of recycle material to screened product.
c. Indicates data not available.

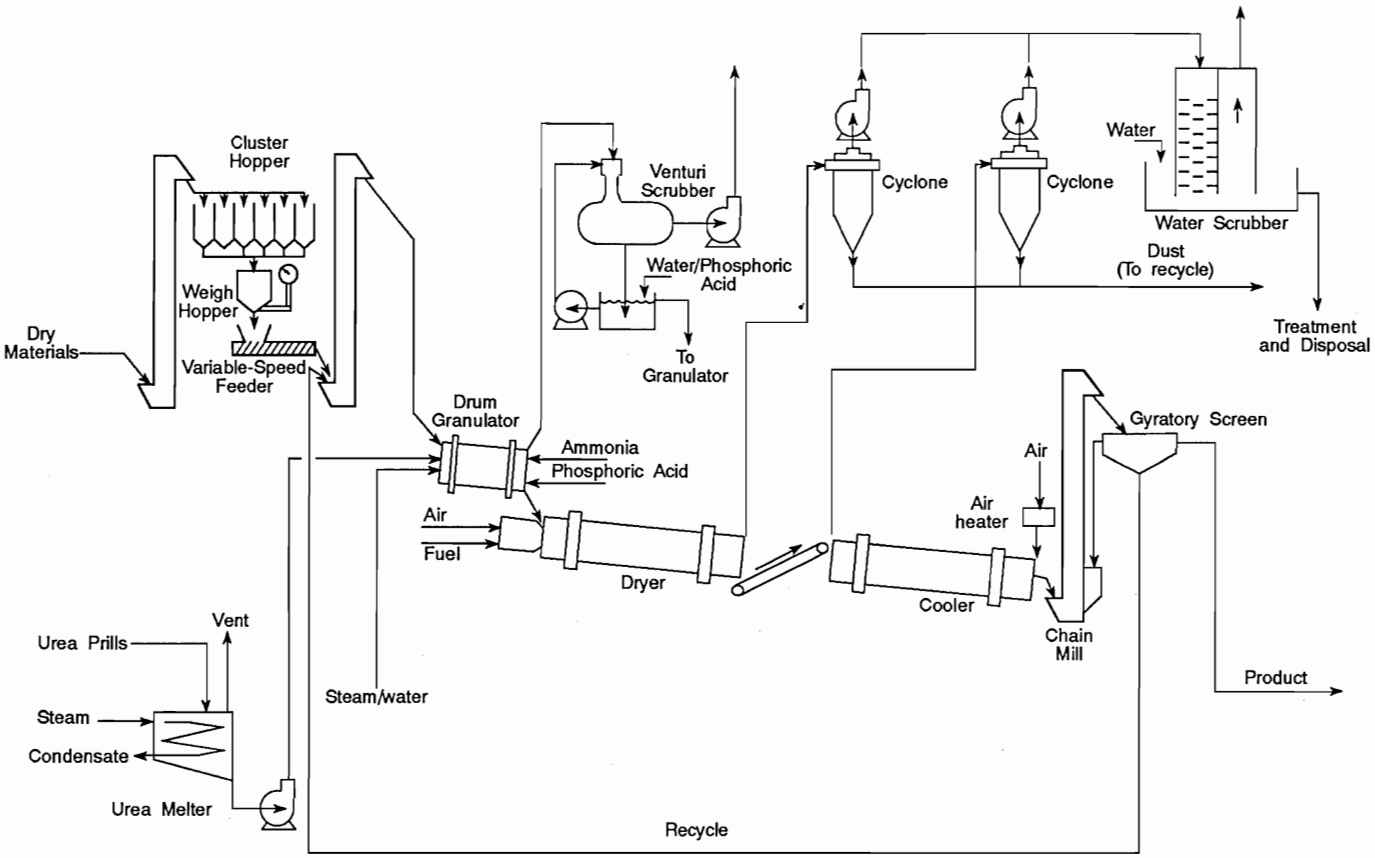

Note: Use of ammonia and phosphoric acid is optional depending upon formulation. If phosphoric acid is not used water balance is difficult to maintain.

Figure 1. Process Flow Diagram – IFDC Pilot-Plant Production of Urea-Based 17-17-17 Using Optimum Equipment Configuration (Cool Screening).

Effect of Increased Dryer Temperature

The second pilot-plant demonstration (Test 2) was operated using the same formula (Table 1) and equipment configuration (Figure 1) used in the base-case demonstration. However, in this test the dryer temperature (material) was increased after several hours of operation from the optimum material temperature of 68°C. The dryer discharge material became very sticky at 71°C and caused a plant shutdown shortly after it reached 75°C. The plant shutdown resulted from the stoppage of material flow through the chutes, elevators, and screens. This shutdown occurred within 30 minutes after the dryer temperature was increased above the optimum material temperature of 68°C. Also, a buildup of fertilizer occurred on the last third of the dryer shell (near the outlet end) due to melting during this 30-minute period. This demonstration clearly illustrated the danger of exceeding the temperature limits of urea-based NPK fertilizers.

Effect of Formulation Change and Conversion From Cool to Hot Screening

The third pilot-plant demonstration (Test 3) was performed using the same equipment configuration and operating conditions used in the first two demonstrations, but the formulation was changed to include the addition of some phosphoric acid and ammonia to the granulator (Table 2). After steady operation for a period of time, the process cooler was bypassed and the plant was operated in a hot screening mode (Figure 2).

The formula change was made to show that the same urea-based granular NPK fertilizer could be produced

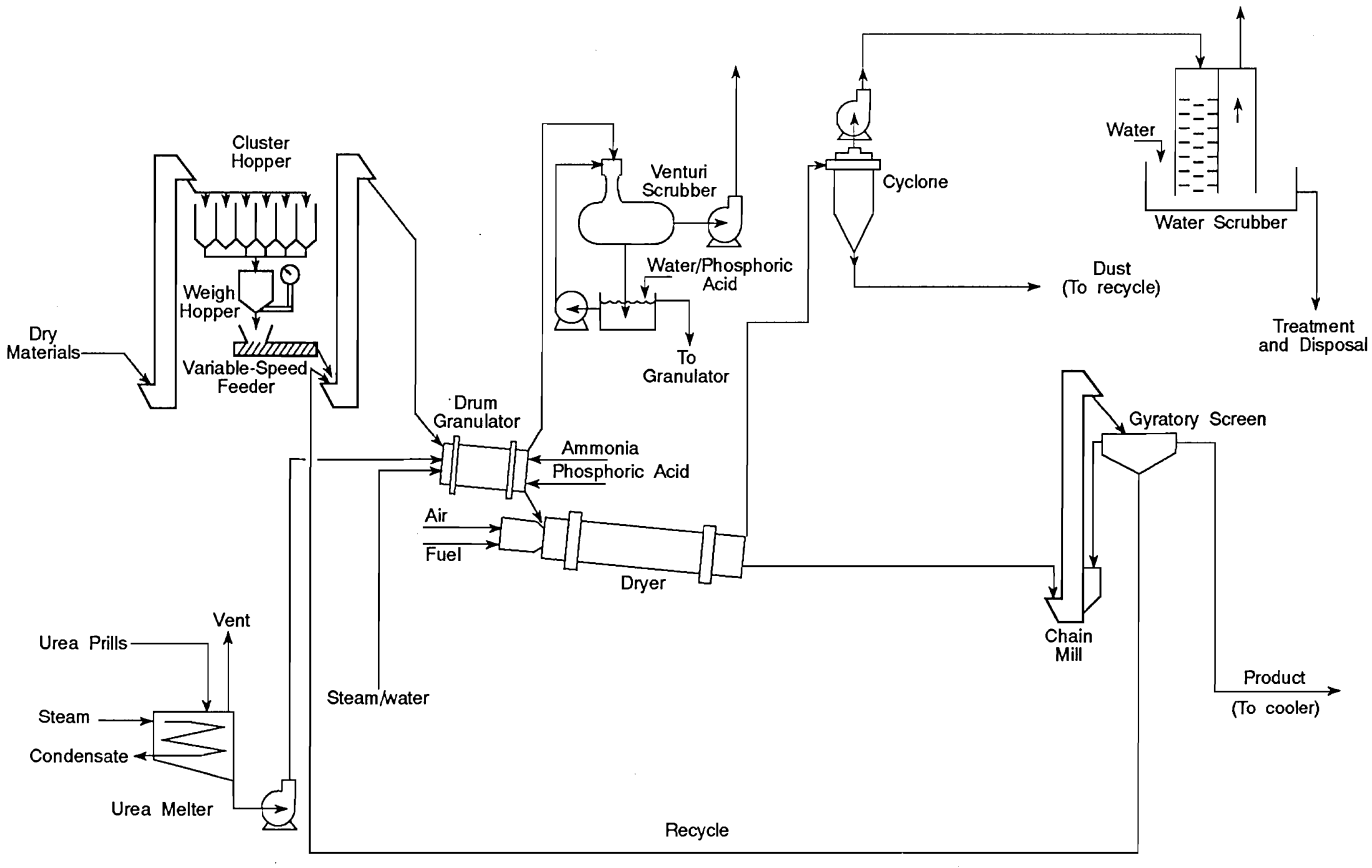

Note: Use of ammonia and phosphoric acid is optional depending upon formulation. If phosphoric acid is not used water balance is difficult to maintain.

Figure 2. Process Flow Diagram – IFDC Pilot-Plant Production of Urea-Based 17-17-17 Using Less Than Optimum Equipment Configuration (Hot Screening).

with an improved plant water balance by furnishing a portion of the P_2O_5 as phosphoric acid fed through the scrubbers instead of using water scrubbing. The recovered acid (scrubber liquor) was sprayed onto the rolling bed of material in the drum granulator and ammoniated with gaseous anhydrous ammonia fed through an underbed sparger. The ammonia-to-phosphoric acid mole ratio in the drum granulator was controlled at 1.0. The use of phosphoric acid increased the granulation efficiency and thereby decreased the amount of steam needed to promote granulation.

The plant was allowed to reach equilibrium before switching to the hot screening mode. Within 2 hours of this change, blinding of the screens occurred. The blinding was caused by the stickiness of the hot plastic material and the increased hygroscopicity (lowered CRH) of the hot fertilizer. The relative humidity of the ambient air in the plant was only 46% during this period, but still the effect of hygroscopicity was observed over a very short period of time. The hot screening mode also resulted in a higher recycle temperature; therefore, the entire temperature profile in the granulator and dryer increased, which further compounded the problem and made it difficult to maintain control of the temperature and granulation conditions in the granulator. The overall temperature profile in the plant could probably have been lowered by decreasing the flow of fuel to the dryer; however, time did not permit a demonstration of this alternative. Experience has shown that even if good granulation conditions can be achieved

with hot recycle (hot screening mode of operation), the material exiting the dryer is often too plastic to facilitate efficient screening and crushing of oversize.

Conclusion and Observations

The purpose of the demonstrations was to show the effects of heat and humidity on the production of granular urea-based NPK fertilizers. Because of the temperature limits imposed on the dryer by the heat sensitivity of urea-based fertilizers, the plant's production rate is lower than the rate possible with ammonium phosphate-based or other less temperature sensitive fertilizers. Efforts to increase the production rate of urea-based formulations by increasing the dryer temperature or the retention time within the dryer inevitably lead to fouling of the dryer and, in the case of hot screening, blinding of the screens and plugging of the crushers. Even when the dryer temperature limitations are observed, hot screening will usually lead to blinding of the screens. This is due to the fact that the product discharged from the dryer is usually too soft and plastic to facilitate effective screening and crushing. Also, the CRH of urea-based fertilizers decreases as the fertilizer temperature increases, thus causing additional problems due to the hygroscopic nature of the material. The hot, hygroscopic granules become moist and sticky and contribute to blinding of the screens. The visual evidence offered by the pilot-plant demonstrations presents a clear statement of the problems that urea-based fertilizers can present if the critical design and operating parameters are not observed.

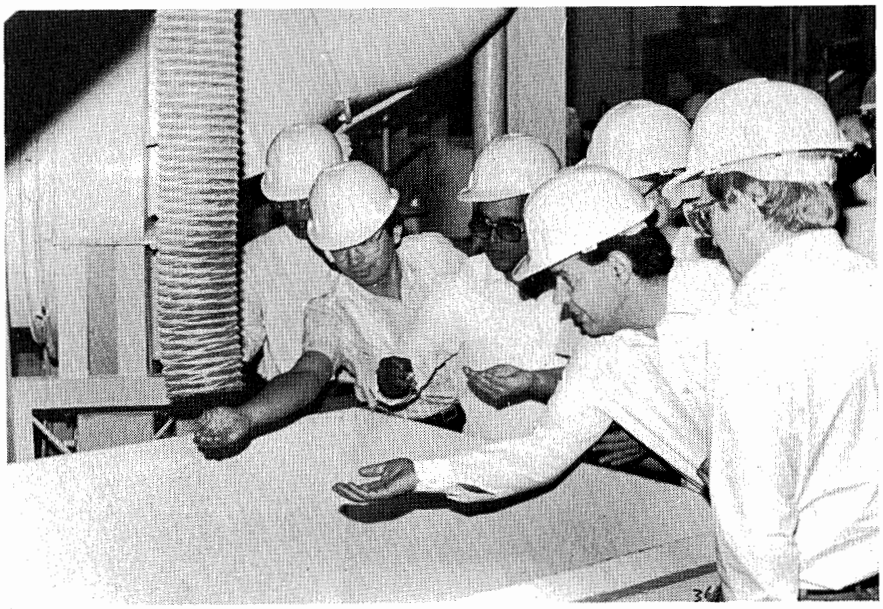

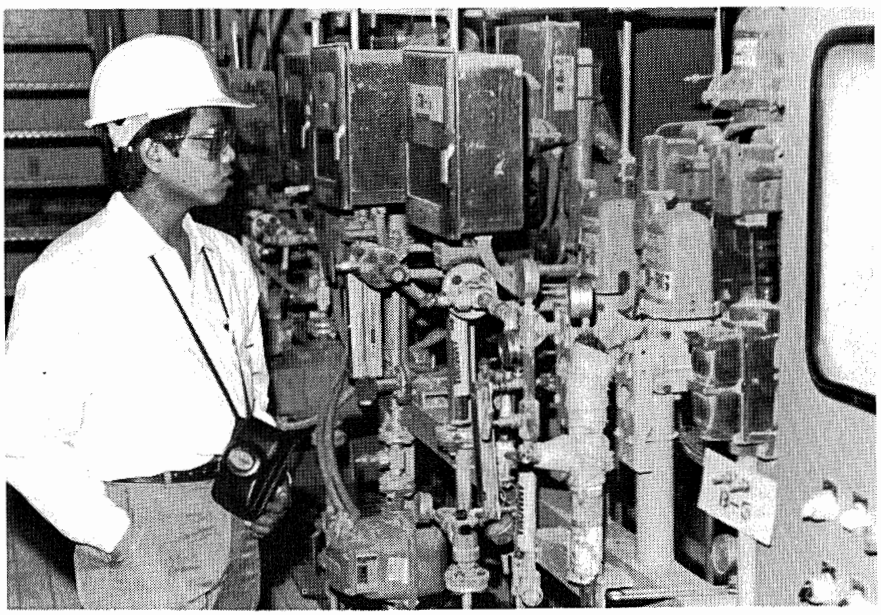

Pilot-Plant Demonstration of TVA Pipe-Cross Reactor Technology for the Production of Urea-Based 17-17-17

B. W. Curtis[1]

Introduction

The melt granulation pilot plant at TVA's National Fertilizer and Environmental Research Center (NFERC) was operated on September 25, 1990, as part of the IFDC workshop on Urea-Based NPK Plant Design and Operating Alternatives. The plant was operated at a production rate of 454 kg/h to produce a granular 17-17-17-3S-2MgO product. The purpose of the operation was to demonstrate melt granulation of a urea-based NPK using the pipe-cross reactor/drum granulator reaction system. A flow diagram of the TVA process is shown in Figure 2, page 54 (B. R. Parker et al.).

Plant Operation

Operation with two formulations was demonstrated – one used sulfate derived from sulfuric acid and the other used solid ammonium sulfate as the sulfate source. The formulations and typical operating conditions are shown in Tables 1 and 2. The particle-size distribution of the solid raw materials fed to the granulator is given in Table 3.

The pipe-cross reactor used in the demonstration was about 1.8 m long and 3.8 cm in diameter. It was constructed of Hastelloy C-276. The melt distributor was a single flood-jet spray nozzle. The nozzle's wide angle and low impact velocity resulted in a very good spray pattern and lower recycle requirements. Operation of the pipe-cross reactor was satisfactory with either formulation. However, more heat of reaction was produced, and thus, less drying was required, when using the formulation containing sulfuric acid (Formula A). An advantage of using solid ammonium sulfate is a lower recycle ratio because of less liquid phase in the drum granulator. The use of microprilled urea avoided the need for crushing the urea before feeding to the process. Microprilled or crushed urea is preferred over standard prills to decrease the visibility of urea particles in the NPK granule structure.

1. Research Chemist, Tennessee Valley Authority (TVA) – United States.

General Observations

The plant operation produced the following observations that may be useful to those comparing a melt process using a pipe-cross reactor with a slurry or steam granulating process.

Advantages

- A generally lower recycle ratio can be obtained with the melt-type process than with the alternative processes.
- Less drying is required with the melt process.
- Startup and shutdown of a pipe-cross reactor are both quick and easy compared to these operations with a tank-type preneutralizer.

Table 1. Formulations for Urea-Based 17-17-17-3S-2MgO

Material	Formula A Using Sulfuric Acid	Formula B Using Ammonium Sulfate
	(kg/t)	
Feeds to pipe-cross reactor		
Gaseous ammonia	41	24
Phosphoric acid (54% P_2O_5)	315	315
Sulfuric acid (92% H_2SO_4)	50	0
Feeds to granulator		
Gaseous ammonia	16	16
Urea microprills (46% N)	270	270
Kieserite (26% MgO)	76	76
Potassium chloride (60% K_2O)	283	283
Ammonium sulfate (20% N)	0	63

Table 2. Typical Operating Conditions for the Production of Granular 17-17-17-3S-2MgO

Condition	Formula A	Formula B
Melt NH_3:H_3PO_4 mole ratio	0.6	0.6
Product NH_3:H_3PO_4 mole ratio	1.0	1.0
Pipe-cross reactor		
Melt temperature at discharge, °C	143	121
Granulator		
Recycle-to-product ratio	2	1
Product discharge temperature, °C	71	68
Product water content, % (AOAC)	2.0	No data
NH_3 evolution, % of total NH_3 fed	3	3
Dryer		
Inlet air temperature, °C	110	110
Product discharge temperature, °C	69	69
Screened product		
Moisture, %	1.1	No data
Granule crushing strength, kg/granule	2.8	1.9

Disadvantages

- In general, a more irregularly shaped granule is formed with the melt process.
- With the melt process, it may be difficult to uniformly incorporate large quantities of potash or other solid materials into the granule structure because the duration of the melt (liquid) phase is limited.
- When producing urea-based grades, the high melt temperature may cause excessive melting of the urea and thus make it more difficult to control the liquid phase in the granulator.

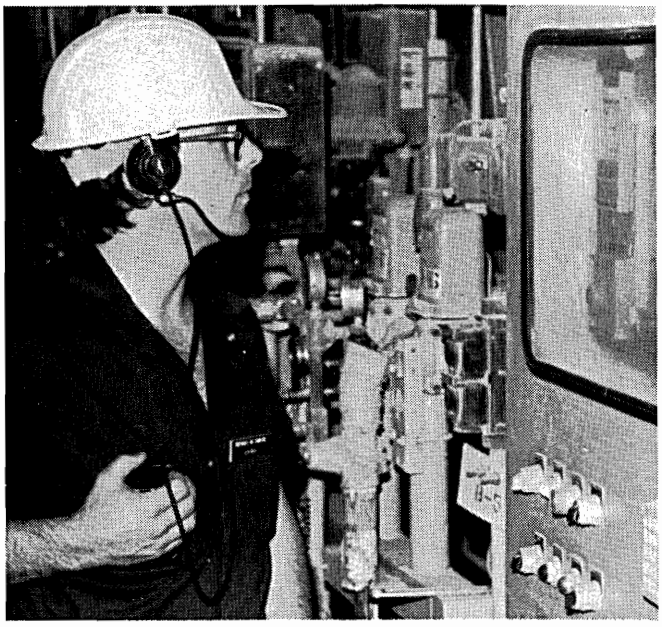

Table 3. Particle-Size Distribution of Solid Raw Materials

Tyler Mesh	Urea Microprills	Ammonium Sulfate	Potassium Chloride	Kieserite
	(% retained on indicated mesh)			
10 (1.7 mm)	1.2	5.3	1.7	-
12 (1.4 mm)	5.8	7.7	3.9	-
16 (1.0 mm)	39.4	17.1	19.6	-
20 (0.85 mm)	62.7	23.0	34.3	-
28 (0.60 mm)	92.9	30.2	62.1	19.9
35 (0.43 mm)	98.6	34.8	77.7	40.3
Pan	100	100	100	100

Pilot-Plant Demonstration of Urea-Based NPK Granular Fertilizers Produced by the Compaction Process

J. Ramon Lazo de la Vega[1]

Abstract

This paper describes the basic processes, including compaction/granulation, used to produce granular NPK fertilizers. The small-scale IFDC compaction/granulation unit used to demonstrate the process is described. The value of such a small-scale unit in designing commercial-scale NPK compaction/granulation processes is discussed.

Introduction

Many solid fertilizers are now produced in granular form. The conventional granulation methods used in the fertilizer industry for the production of such granules are (1) steam and chemical granulation and (2) prilling. With the exception of prilling, the granulation process may utilize a number of granulation devices, including a rotary drum, pan or disc granulator, fluidized bed, or pug mill. The one common feature in all these conventional granulation methods is that they require a liquid phase for the formation of the generally spherical granules. This liquid phase may be water, a salt solution, or a melt. In the granulation processes mentioned above, the liquid phase is sprayed or otherwise distributed onto a tumbling mixture of fresh raw material and recycled undersize granules in the granulator. Prilling consists of spraying or distributing a melt in a cooling tower and allowing the droplets to cool and solidify into pellets as they fall. In general, solid fertilizers (straight or compound) can be produced by the following processes, depending on the raw materials used:

1. Granulation of dry-mixed materials with water and/or steam where chemical reactions are not essential to the process.

2. Granulation of dry materials with water and/or steam plus the addition of materials that react chemically (ammonia, sulfuric acid, and phosphoric acid).

3. Slurry granulation in which the materials to be granulated are first formed by chemical reactions between sulfuric, phosphoric, or nitric acids and phosphate rock. The resultant reaction slurry is then granulated by spraying it onto a bed of solid (recycled) material in the granulating equipment.

4. Melt granulation in which the granules are formed by cooling a hot fluid melt, such as urea, ammonium nitrate, or ammonium phosphate. Prilling is a type of melt granulation.

5. Granulation of dry materials by compaction. Mechanical force is used to compact individual particles into a dense sheet of material which is then crushed (granulated) to obtain the desired product granule size.

Granulation processes in which the liquid phase is obtained from water, steam, a salt solution, or a slurry require drying and usually cooling. Melt-type granulation processes such as prilling require only a cooling step, but a significant amount of energy is usually required to prepare the nearly anhydrous melt. As energy costs increase, these drying and melting steps account for an increasing portion of the production cost.

For the compaction/granulation process, the raw materials are cool and dry and thus the melting, drying, and cooling steps are avoided. The compaction/granulation process can be considered an alternative for the granulation processes where chemical reactions are not essential for the process (for example, the steam/water granulation processes). The compaction/granulation process can also be considered an alternative for bulk blending, a process in which dry fertilizer materials are physically mixed to arrive at a number of nutrient combinations.

Compaction – Principle

The basic principle of agglomeration by compaction is the application of pressure on a dry powder as it flows between two counter-rotating rolls as shown in Figure 1. The effect of the applied pressure is to remove the air between the particles of the bulk powder and so densify the

1. Special Project Engineer, International Fertilizer Development Center (IFDC) – United States.

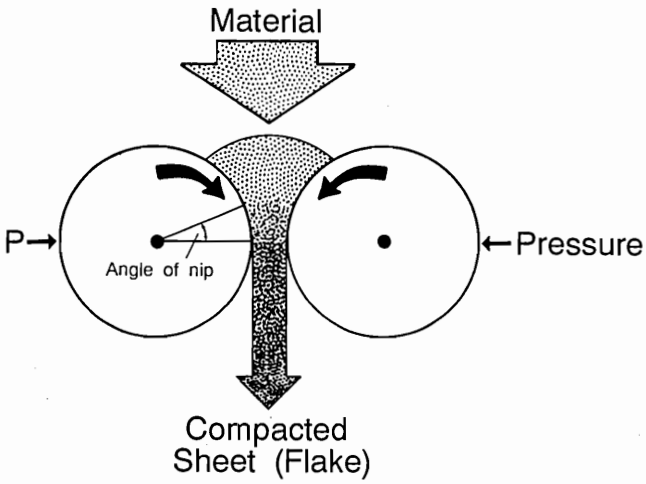

Figure 1. Diagram of Pressure-Roll Compaction Principle.

material. This densification causes extremely close contact between individual particles and the formation of a very dense, strong flake (sheet) in which the forces holding the particles together may be molecular forces of attraction (van der Waals), adsorption forces, solid bridges, or mechanical interlocking. The formation of solid flakes, or sheets, by such a roll-pressing process using smooth, corrugated, or waffle-surface rolls is normally referred to as pressure-roll compaction. The reduction of the flakes to a typical granular size of 1-4 mm by crushing and screening is known as granulation; thus, the process is known as compaction/granulation.

Pilot-Plant Demonstration of Compaction/Granulation Process

Producing granular urea-based NPK fertilizers by the compaction process presents more difficulties than does the production of ammonium phosphate-based products by the compaction/granulation processes. This is because of the hygroscopicity of urea and the low critical relative humidity and increased plasticity of fertilizer mixtures containing urea.

Commercial fertilizer companies located in tropical countries claim that for production of urea-based NPKs by the compaction process the urea content in the formulation should be kept below 30% to (1) keep product quality under control and (2) be able to routinely return the recycle material to the compactor. Once the material has been screened, the fines and crushed oversize (recycle material) contain fine urea dust that picks up moisture very easily. This moist material sticks to the bucket elevators, chutes, and inside the compactor's feed system. Some companies located in the tropics may be able to produce a 15-15-15 grade containing about 10% urea but report having difficulty producing a 19-19-19 grade containing about 25% urea.

Description of Process

The IFDC Pilot Plant (Figure 2) was configured to simulate a commercial plant using the compaction/granulation process. The grade produced for the demonstration is a 11-22-22. The raw material formulation is shown in Table 1. The small-scale IFDC compaction/granulation unit provides very useful preliminary data on the compaction of a number of solid materials and mixtures, including nonfertilizer materials. The unit, however, does have its limitations. Because of its small size, sufficient pressure cannot be developed to successfully compact some materials, such as straight ammonia sulfate which requires a pressure equivalent to about 10 tonnes/cm of roll width. Nevertheless, the unit provides basic screening-type data, which complement larger scale testing that is often needed for the design and optimization of commercial-scale units.

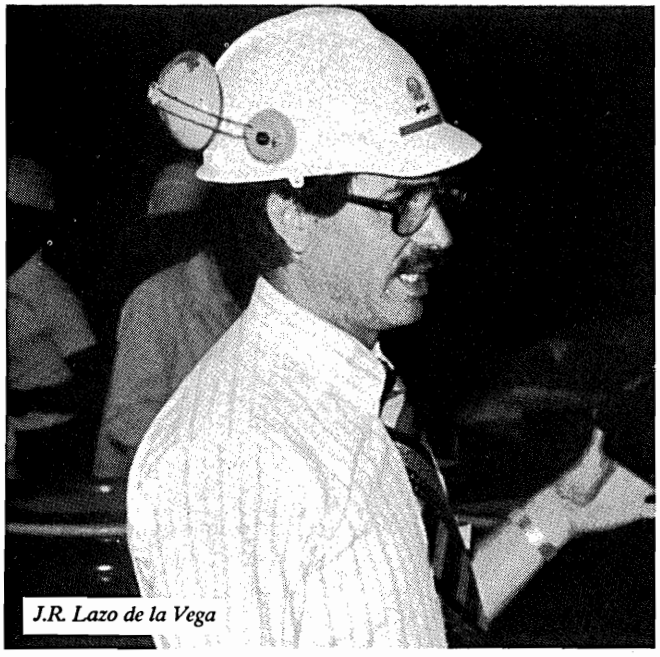
J.R. Lazo de la Vega

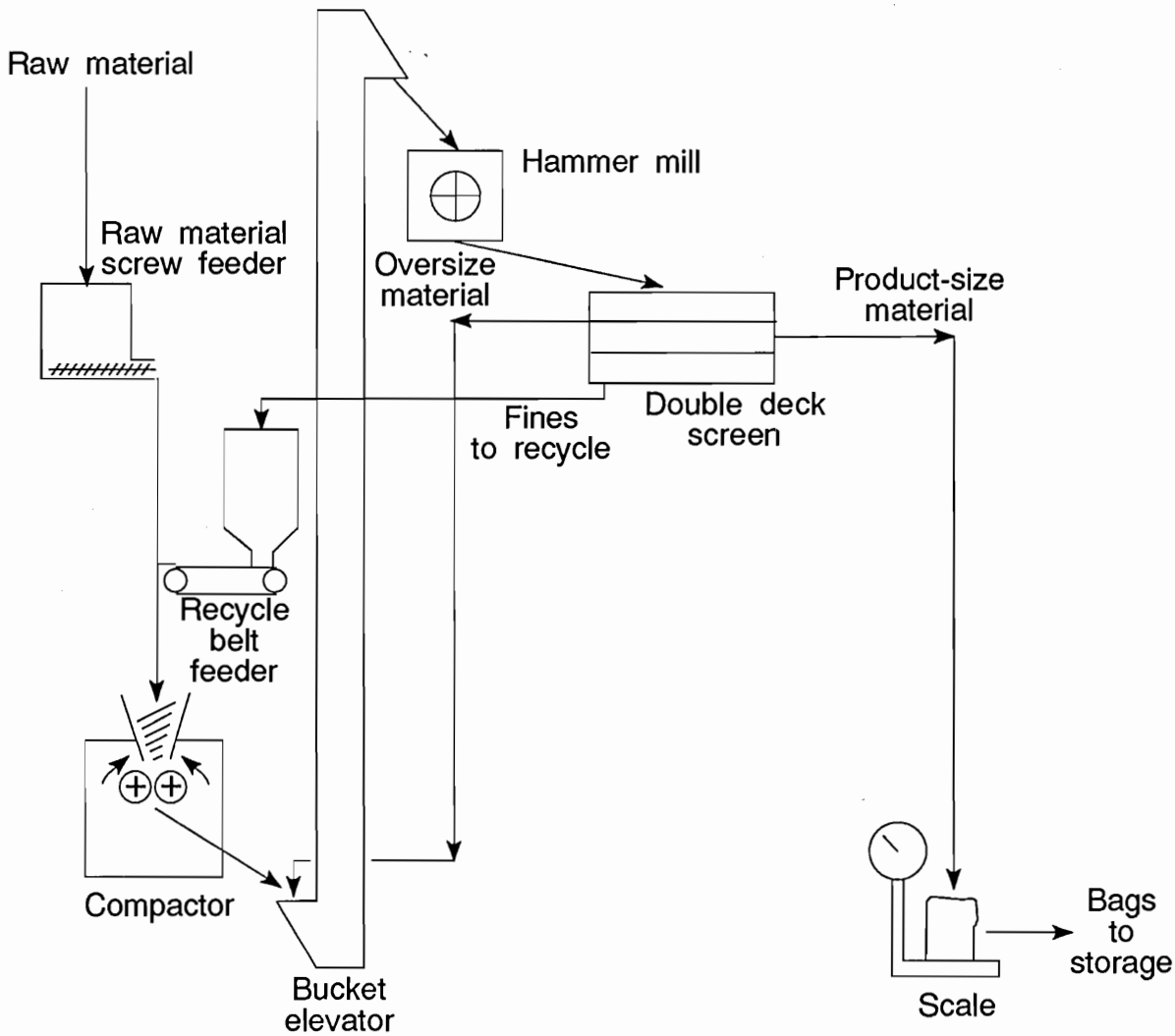

Figure 2. Flow Diagram of IFDC Pilot Plant-Scale Compaction/Granulation Process.

Table 1. Production Formula for Granular 11-22-22 Produced by Compaction/Granulation

Material	N	P_2O_5	K_2O	Required Amount	End Product Analyses N	End Product Analyses P_2O_5	End Product Analyses K_2O
	(% by wt)			(kg/t)	(kg/t)		
Prilled urea	46.0			143	65.8		
Powdered MAP	10.0	50.0		444	44.4	222.0	
Standard KCl			60.0	369			221.4
Filler				44			
Total				1,000	110.2	222.0	221.4
Product analysis, %					11.0	22.2	22.1

A screw feeder for the fresh raw materials and a belt-type feeder for the recycle material are located above the compactor. The screw feeder is used to feed a mixture of urea, monoammonium phosphate (MAP), and potassium chloride (KCl). The mixture of raw materials and the recycle material discharge into a chute and fall by gravity into the compactor feed hopper equipped with a mixing device (rotating shaft with paddles). The material from the hopper is fed to the compactor rolls by a variable-speed screw feeder (auger), forcing the material into the roll nip where the materials are compressed to form a sheet (flake) of the product. The IFDC compactor unit is a Ferro-Tech laboratory-scale briquetter/compactor (Model WP 10-01) that has a roll-over-roll configuration. The rolls are held together by force from a hydraulic cylinder 8.25 cm in diameter. A nitrogen-filled accumulator in the system acts as a pressurized reservoir to store or release oil to one cylinder (roll) in order to maintain a relatively constant separating force for the rolls. The system is pressurized with a manually operated hydraulic pump. The pressure system is capable of a maximum pressure of 10 tonnes on rolls that are 5 cm wide. This is equivalent to a pressing force of 2 tonnes/cm of roll width. The unit is equipped with variable-speed motors for the rolls and the auger (force feeder). The rolls used for the demonstration are 12.5 cm in diameter and have a corrugated surface; the depth of corrugation is 1 mm with a pitch of 5 mm. The diameter of the feed auger is 5 cm.

Once the material passes through the rolls and the flake is formed, it flows by gravity into the intake of a continuous discharge-type bucket elevator. The elevator discharges the flakes into a hammer mill where they are crushed and discharged onto a double-deck screen. The hammer mill is a Prater Industries Model GSHFSI operating at 1,750 rpm.

The double-deck screen separates the hammer-mill discharge material into oversize material, onsize product, and fines (undersize material). The oversize material is recycled to the hammer mill, and the undersize material is recycled to the compactor. A Sweco horizontal, vibrating double-deck screen is used; it is 122 cm (48 in) in diameter. The screen cloths are 6- and 14-mesh (Tyler) Type 316 stainless steel. The product collected is in the particle size range of minus 3.35 plus 1.18 mm.

Conclusion

The pilot plant-scale compaction/granulation unit used by IFDC provides a useful means for performing a preliminary assessment of the compaction characteristics of individual fertilizer materials and mixtures. The unit is also used to prepare small quantities (typically 50 kg-500 kg) of experimental fertilizer products used for agronomic trials. This combination of preliminary engineering and agronomic data provides a basis for the logical and stepwise development of new or modified fertilizer products.

Questions and Answers
Agronomic Session

Question
What are the agronomic differences between nitrogen (N) coming from urea and ammonium nitrate and other ammonium salts?

Answer (B. H. Byrnes, IFDC)
Generally there is no agronomic difference if the sources are used judiciously. While nitrate forms are not suitable for flooded rice, the ammonium forms (including urea) are transformed by nitrification to nitrate. Ammonium uptake by plants (other than flooded rice) is normally only a small amount because nitrification is rapid and ammonium, as a cation, has limited mobility in soils. Nitrate is much more mobile, moving with the soil water to roots. The only notable exceptions to the lack of differences is if an ammonium source, particularly urea, is not incorporated into the soil and weather conditions cause it to hydrolyze on the soil surface leading to ammonia volatilization. Also, ammonium sulfate leads to soil acidification more than nitrate forms or urea.

Question
Will urea supergranules or compacted fertilizers meet the requirements of "slow release fertilizers?"

Answer (B. H. Byrnes, IFDC)
Deep point placement of urea (with supergranules) appears to not only reduce losses through ammonia volatilization and denitrification in flooded soils, but it also delays N availability to the rice plant. This is thought to be due to its spatial separation from early root growth and to its development of high ammonia concentrations that may temporarily inhibit root growth into the placement zone. Since urea is soluble, supergranules would not be considered a slow-release fertilizer, but they may be considered a delayed availability form of management which is often desirable.

Question
What exactly is "urea sulfur" and how is it produced?

Answer (D. K. Friesen, IFDC)
Urea sulfur (36-0-0-20S) was a product produced by Cominco Ltd. (Canada) containing 20% finely divided elemental S dispersed throughout the urea prills or granules. It is made by combining streams of molten urea and molten sulfur and mixing them above their melting points and then prilling the melt.

Answer (J. J. Schultz, IFDC)
Another urea-sulfur product was recently developed by NSM of the Netherlands (now Norsk Hydro Belgium S.A.). This product is called UREAS.® It is a homogeneous granular mixture of urea and ammonium sulfate containing 40% N and 5% S. It is produced in a fluidized bed-type granulation process developed by NSM.

Question
How is sulfur mixed with TSP?

Answer (D. K. Friesen, IFDC)
Finely divided elemental sulfur is added along with phosphoric acid during the acidulation of phosphate rock in the TSP process. The elemental sulfur slurry can be prepared by wet grinding sulfur or by spraying molten sulfur into a rapidly stirred tank of phosphoric acid. Our test product contained 16% S (P:S = 1) but the concentration can be adjusted to suit a particular market.

Question
Urea suffers from volatilization. If this loss of nitrogen is a predictable percentage, it is only a matter of economics. But volatilization is not predictable, and the crop may either have too much or too little nitrogen. How can this problem be overcome?

Answer (B. H. Byrnes, IFDC)
Nitrogen losses through ammonia volatilization are not easily predicted, since volatilization is dependent on several climatic and soil factors. If rainfall occurs, the urea is dissolved and moves into the soil. With no rainfall,

ammonia volatilization depends on the hydrolysis rate of the urea, ability of the soil to absorb ammonium, the pH of the soil and its buffering capacity, and wind speed and temperature. Caution should be used in extrapolating urea loss measurements to a urea-PK product for three main reasons:

1. Research has shown that urea phosphates are not as susceptible to losses as urea alone because a lower pH develops in the microzone around the hydrolyzing granule.
2. The amount of urea at any granule site is low so the ammonium absorption capability of the soil may not be exceeded.
3. The P and K constituents are not well utilized when left on the soil surface, so urea-PKs should be incorporated if at all possible, leading to little ammonia loss.

Question
You indicated that when phosphate rock (PR) is compacted with urea, the P_2O_5 becomes more soluble. Was this tested with neutral ammonium citrate solution?

Answer (S. H. Chien, IFDC)
The beneficial effect of urea on PR dissolution takes place only in the soil. When urea hydrolyzes in soil, the increase in soil pH may result in hydrolysis of soil organic matter which in turn complexes with Ca^{+2} released from PR dissolution. Because Ca^{+2} concentration in the soil solution is decreased, this enhanced further PR dissolution.

Question
Dr. Chien showed slides evaluating results of compacted TSP plus urea plus KCl. I was always told you could not mix TSP and urea. Please comment.

Answer (S. H. Chien, IFDC)
It is true that urea is incompatible with TSP in compaction. But here we compact PR + TSP + urea rather than urea + TSP alone. Normally, we fix the P_2O_5 ratio of PR:TSP at 50:50. Since P_2O_5 of PR is about 30% and TSP is about 48%, there are many PR particles that can block the interaction between TSP and urea so that formation of the adduct is reduced. Additional KCl may further reduce the adduct formation by diluting the concentrations of TSP and urea. Also, the quality of the TSP (for example, free acidity and moisture content) has a major influence upon its compatibility with urea. Therefore, one should be cautious and it is important to carefully evaluate each particular source of TSP before committing to its commercial use with urea.

Question
In the United States, are the farmers satisfied using NPKs with prices higher than straight materials? How about in developing countries?

Answer (J. J. Schultz)
The cost of fertilizer represents anywhere from about 10% to 20% of the cash cost of production in the United States depending upon the crop. The farmer does not object to paying a bit more for a fertilizer provided his total cost of production does not increase. Major production costs in the United States are interest, fuel, pest control chemicals, and labor; therefore, decisions are not made solely on the cost of the fertilizer component. A multinutrient fertilizer (homogeneous granular or blend), although costing more than a straight material, may save considerably on fuel and labor required for application.

In many developing countries the situation is often quite different. Many times fertilizer may represent 60%-80% of the cash cost of production. In this case, the farmer would be very reluctant to pay more for a granular product or any other form of fertilizer that costs more than the lowest cost straight material.

Question
Mr. Schultz, your comments are significantly recognized in Indonesia because all Indonesian fertilizer companies are producing single nutrient fertilizers that are subsidized by the Government. If a company wants to manufacture a compound fertilizer, say DAP or an NPK, it will not be subsidized and the price will be much higher compared with a single nutrient fertilizer or a self-mixed (blended) fertilizer made from single nutrient materials. What are your comments?

Answer (J. J. Schultz)
Your point is understood. Any type of subsidy program has its share of flaws. In this case, the subsidy system in Indonesia inhibits change from the subsidized straight materials–urea, ammonium sulfate, and TSP. This may be good, then again it encourages overuse of these cheap (subsidized) fertilizers which, in the long run, will be harmful not only to the soil and environment but also to the economy of the country. This is one reason why currently there is much pressure worldwide to decrease subsidies, especially on agricultural inputs such as fertilizer and pesticides.

Question
What kind of equipment is used for coating urea with polymers?

Answer (J. H. Detrick, Pursell Industries)
The two reactive monomers – (1)isocyanate and (2) a polyester polyol containing an amine catalyst – are pumped through separate lines to a series of alternate spray nozzles located in a rotary drum. The preheated cascading urea granules pass under these spray nozzles so that the two liquid monomers are applied in layers onto the granule surface. The rubbing action of one granule against the next spreads the liquid monomers as they copolymerize to form a solid coating. The thickness of the coating is controlled by the fluid flow rates, urea flow rate, and the number of nozzles used. In general, the coating on a nominal 2.5 mm diameter granule is about 25 microns thick and represents about 6% of the coated product weight.

Question
Have you made agronomical tests to compare the efficiency of different controlled-release nitrogen fertilizers (for example, SCU, UF, IBDU, and melamine) and what kind of results do you have? Can you compare UF, IBDU, and melamine as controlled release fertilizers? Do you have any experience with DCD or corresponding products (nitrification inhibitors)?

Answer (J. H. Detrick, Pursell Industries)
The graph shown on page 10 (Figure 1) illustrates our experience with a number of controlled-release nitrogen fertilizers applied on turfgrass.

Question
How do you see the market for controlled-release fertilizer products in the future?

Answer (J. H. Detrick, Pursell Industries)
Controlled-release fertilizers, particularly controlled-release nitrogen products, will continue to grow in the non-crop sector (for example, turfgrass) at an annual rate of 3%-5%, but this rate can turn down in a sluggish economy. The use on agricultural crops will be limited to those of high cash value, such as ornamental horticulture in the United States where land values are from US $10,000 to US $30,000 per acre, or on row crops, such as strawberries grown in sandy soil under black plastic mulch (tendency to leach, high soil temperature, and one-time fertilizer application). The polymer-coating technology can also potentially be applied to certain pesticides where extended pesticide effect is desired and water runoff and chemical leaching are concerns.

Questions and Answers
NPK Plant Design and Operation

Question
As per the chart on percent product change (after making a raw material feed change) versus time for different recycle-to-product ratios, it is seen that it takes 10 hours for change in the case of a recycle ratio of 6 (refer to Figure 4 in Appendix). In a plant with, say, 40 tph production capacity, what will happen to the production (400 tonnes of off-grade material) during this period. At this rate, before a correct adjustment is attained, a large amount of off-specification product would be produced. I would appreciate your comments on this.

Answer (J. J. Schultz, IFDC)
You are correct; it takes a long time for a change in feed to show up in the product. That is why good control and management of the process are essential. The flow instruments must work properly and be constantly checked to ensure that the indicated readings are correct. If your instruments are unreliable, there is no way that you can adjust them to correct an off-specification product. Therefore, we must start with equipment that can be easily checked on a running basis. This is the reason why I advocate the batch-type feed system. Every batch can be carefully checked and cross checked simply by using a stopwatch to time the continuous streamout feed rate of a known weight of material, say 5 tonnes. On a weekly basis, or more frequently, a test weight set can be used to double check the accuracy of the batch weighing scale. These check weights can also be installed in such a way that the batch scale can be checked each shift in just a few minutes using a test weight platform and cable attachment system. If continuous weigh belt-type feeders are used, they should be installed in such a way that their output can be checked at least twice a shift by diverting the feed to a test scale unit. This, of course, is difficult to do and labor intensive. The answer to your question, then, boils down to the fact that large amounts of off-specification product will be produced if the feed rates are not precisely controlled. Once the feed rate is off, it takes a long time even under ideal circumstances to correct the impact it has on the product.

Question
As we saw from the graph, an adjustment made to control the nutrient content will show up only after a period of time fixed by the recycle-to-produce ratio (throughput and retention time). How often would you suggest sampling the end product for process control purposes?

Answer (J. J. Schultz, IFDC)
In a typical NPK plant operating at a 3:1 recycle-to-product ratio, about 75% of the change in feed composition will show up in the product after about 4 hours. For the purpose of checking the process control, I suggest that a change in the process feed rates be made only after comparing the analytical results of two consecutive samples composited on 30-minute intervals over a period of 4 hours, beginning 4 hours after making the change in feed rate. Making a change on anything less than a 4-hour composite of the final product would be quite meaningless. This, of course, does not apply to the preneutralizer slurry which may be sampled more frequently. It is important to note that sampling of the final product is done to <u>check</u> the process performance rather than to serve as a primary <u>control</u> of the process.

It is important to understand your particular plant and the lag time that it has, not only for different recycle-to-product ratios but also for different production rates and formulas. Once you know this lag time between feed and product, you can use an analytical result to more closely predict what change should or should not be made. For example, a sample taken 2 hours after making a change in feed is useful in estimating the analysis that can be expected 2 hours later. Such samples help establish a meaningful trend and give you an indication of what to expect several hours later.

In routine practice, an 8-hour (shift) composite provides a reasonably good basis for making a change. It is important to note that if your scales and meters are working properly, there is no need to constantly make feed rate changes based on product analysis. The problem may be

poor granulation and segregation together with an inadequate sample collection and sample preparation procedure. Keep in mind that, under normal circumstances, the reported analytical result is based on a sample aliquot equivalent to about one two-hundred-millionth of the product actually produced during the sample period (assuming 8 hours at 30 tph production rate). This underscores the importance of sample collection and preparation.

Question
Yesterday we said that in the case of urea-based NPKs, fluidized beds are not advisable for drying service; are they suitable for cooling service?

Answer (J. J. Schultz, IFDC)
A fluidized-bed unit is well suited for cooling provided the material is closely sized. This means that a fluidized bed would not be advisable for the process cooler (before screening) but it would be okay for product cooling after screening. You may recall that Mr. Ramaswami of NAFCON said that their fluidized bed product cooler causes some problems with excessive entrainment of solids if the screens should blind and fines pass into the product cooler. Mr. Ramaswami also pointed out the importance of keeping the relative humidity of the air fed to the fluidized bed cooler low during operation as well as during shutdowns to avoid wetting and plugging of the air distribution tray. As with all equipment, fluidized beds have their limitations, but if properly designed and installed they are very good for cooling a well-screened product.

Question
How much does a granulation pilot plant such as IFDC's cost?

Answer (J. J. Schultz, IFDC)
In 1977 the IFDC combination bulk-blending/granulation pilot plant cost US $650,000. This cost included US $500,000 for machinery and equipment including electrical and instrumentation; US $50,000 for engineering (all done by IFDC); and US $100,000 for field construction/installation labor and supervision. This cost does not include the basic pilot plant building which was already existing but it does include all structural support steel as the pilot plant is freestanding inside the main pilot plant building.

Question
What is the optimum quantity of material that can be fed into the system using a cluster hopper-type feed system?

Answer (J. J. Schultz, IFDC)
Typically a cluster hopper system will have a combined raw material capacity of 50-60 tonnes divided between 4-6 hoppers. In a 30-tph granulation plant this would translate to a retention time of about 1.5 hours assuming the hoppers are kept reasonably full. A typical batch weighing system can handle 4- to 5-tonne batches. If the dry material portion of the formula is equivalent to 30 tph, then six 5-tonne batches would be prepared every hour, or one batch every 10 minutes. As indicated earlier by Mr. Mohd. Salleh of FPM, they prefer to weigh more smaller batches (12 per hour) to achieve better mixing of the ingredients before they enter the granulator. Since one can easily weigh twelve 5-tonne batches per hour, it would be possible to feed the dry raw materials at a rate of about 60 tph; this would mean that the cluster hopper retention time would be about 30-45 minutes if the hopper is kept between 50% and 75% full. This shorter retention time in the cluster hopper system is preferred for materials that tend to bridge; for example, superphosphate and ammonium sulfate.

Question
In the IFDC pilot plant, why are knockers located near the inlet end of the dryer when the buildup seems to occur near the outlet end?

Answer (J. J. Schultz, IFDC)
The pilot plant is used for many duties. In some formulations buildup occurs near the inlet. This is especially true for NPKs based on single superphosphate. However, as you noted, with many urea-based NPKs a "melting" phenomenon occurs when drying is nearly completed. This leads to sticking and buildup near the outlet; ideally, in this case the knockers should be located in this potential sticking zone near the discharge end.

In general, I question the effectiveness of knockers, they seem to be a good idea but in reality they impart very little vibration to a heavy (thick) dryer shell and onward through the flights where the buildup actually occurs the most. A more practical method for controlling (minimizing) buildup is to carefully control the temperature profile inside the dryer.

Question
Can a drum granulator and a pug mill replace each other? Are they interchangeable?

Answer (J. J. Schultz, IFDC)
If you are referring to agglomeration-type granulation, a pug mill is a very good choice as it promotes intimate

mixing as well as granulation. A major drawback of a pug mill is that it is difficult to mechanically support spargers located beneath the bed of material. To keep the sparger system simple, steam, water, and ammonia are usually fed through the same sparger as there is usually not enough room to fix more than one sparger in the bottom of a pug mill. Sometimes the problem with spargers can be partially overcome by injecting ammonia or other materials into the pug mill through a number of "injection points" located along the bottom of the pug mill. Another disadvantage of the pug mill is that it requires more power than a rubber panel-lined rotary drum granulator.

In my opinion, the ideal granulation plant, assuming solids agglomeration, would consist of a pug mill to premix and moisten all materials (including recycle) followed by a rotary drum unit for ammoniation and final granulation. However, if only one granulation device is available, the rotary drum unit offers maximum flexibility. I do, however, recommend that the length-to-diameter ratio of the rotary drum be at least 3; the longer unit facilitates good mixing and distribution of solids and liquids and improved granule formation prior to drying.

Question
What is the maximum quantity (percent) of urea melt that has been successfully used in commercial plants producing urea-based NPKs?

Answer (J. J. Schultz, IFDC)
This is difficult to answer. I know of some NPK grades that contained 30% urea melt but granulation was not good because the melt solidified too quickly to agglomerate the potash and other solids. TVA produced an NP (28-28-0) grade which was basically a 50/50 mix of molten urea and ammonium polyphosphate melt. The mixing of the two melt streams was done in a pug mill and proper placement of the streams (including scrubber liquor) with respect to the recycle was important to obtain a homogeneous mix.

The amount of urea melt that can be successfully used varies quite widely depending upon other sources of liquid phase in the formula and the amount of solids that must be incorporated into the granule structure.

Question
Mr. Polo, the ammonia absorbing capacity of H_2SO_4 was shown to be 34% of the dry basis acid weight in your table. Is it believed that the reaction of sulfuric acid and ammonia is almost complete and instantaneous; would you enlighten us on this please?

Answer (J. R. Polo, IFDC)
Yes, the reaction between ammonia and sulfuric acid to form ammonium sulfate is almost complete and instantaneous. In reality some ammonium bisulfate will also be formed unless a large excess of ammonia is used, but I would not expect this amount of bisulfate to be over one-half of 1% of the sulfate produced. No reaction is absolutely complete, and this is particularly so in the case of sulfuric acid which has two hydrogen ions to be replaced. Replacing the first hydrogen (forming the bisulfate) is quite easy and fast, while replacing the second one (to form sulfate) takes a little longer and an excess of ammonia. However, as I said before, we can consider the reaction to ammonium sulfate to be complete because of the small amount of bisulfate made, and we can consider it to be instantaneous because it is finished within the time that the material is in the preneutralizer and in the granulator. The sulfuric acid reacted in the preneutralizer may form a larger amount of bisulfate because of the excess of acid in this equipment as indicated by its low pH. However, the balance of the ammoniation reaction to sulfate takes place in the granulator. The overall ammonia absorbing capacity of H_2SO_4, given as equivalent to 34% of the dry basis acid, is really a round number which is not affected by the small quantity of bisulfate formed.

Comment (J. J. Schultz, IFDC)
It is interesting to note that when relatively large quantities of sulfuric acid are reacted along with phosphoric acid in a preneutralizer, a very fluid slurry can be produced at a low moisture content (about 10%-12%) if the NH_3:H_3PO_4 mole ratio is maintained at about 0.4 (pH of about 2). If the mole ratio is raised to about 1.5 (pH of about 6.8), the same slurry becomes quite viscose and the free water content has to be increased to about 20% or more to facilitate pumping. The reason for the large difference in fluidity (pumpability) at the two mole ratios (low and high pH) is most likely due to the quantity, size, and shape of the undissolved ammonium phosphate crystals and perhaps partly to the presence of a higher level of ammonium bisulfate at the lower pH.

Question
How does one predict the temperature in the granulator if the recycle-to-product ratio changes?

Answer (J. R. Polo, IFDC)
Particularly in the case of urea-based NPKs in which the use of a process cooler is strongly recommended, the temperature of the recycle is typically some 10°-30°C lower than the temperature of the granulator bed (discharge). Under these conditions, and considering that

the recycle-to-product ratio may be as high as 4 or 5 to 1, a change in the amount of recycle will affect the granulator temperature as shown in the following table. This table shows the granulator temperature increase or decrease in degrees celsius, for a 20% change in the amount of recycle at various recycle-to-product ratios:

Nominal Temperature Difference Between Material in Granulator and Recycle	Granulator Temperature Increase for a 20% Decrease in Recycle, at a Recycle-to-Product Ratio of:					Granulator Temperature Decrease for a 20% Increase in Recycle, at a Recycle-to-Product Ratio of:				
	1	2	3	4	5	1	2	3	4	5
(°C)	(°C)					(°C)				
10	1	2	2	2	2	1	1	1	1	1
12	1	2	2	2	2	1	1	2	2	2
14	2	2	2	3	3	1	2	2	2	2
16	2	2	3	3	3	1	2	2	2	2
18	2	3	3	3	4	2	2	2	2	3
20	2	3	4	4	4	2	2	3	3	3
22	2	3	4	4	4	2	3	3	3	3
24	3	4	4	5	5	2	3	3	3	3
26	3	4	5	5	5	2	3	3	4	4
28	3	4	5	5	6	3	3	4	4	4
30	3	5	5	6	6	3	4	4	4	4

Avoiding these changes in temperature and counteracting them by adjusting steam and other variables, is part of the many jobs the operator has to contend with during a working day.

Question
Have you made a study of how the air velocity in the drying drum affects granule retention time in the drum? Should this be taken into account when designing drying equipment, especially in rehabilitation projects?

Answer (J. J. Schultz, IFDC)
Yes, we have performed several trials in the pilot plant and made several observations in commercial-scale cocurrent dryers. Our data, however, are quite empirical. The air velocity-retention time relationship is influenced quite significantly by particle size and particle surface texture (drag), not to mention, of course, dryer flight design, slope, and rotational speed. In general, if the air velocity exceeds 2 m/second in an NPK plant, a large majority of the minus 1-mm particles become entrained. In a typical DAP plant where the granules are, on average, larger and more uniformly sized and quite smooth (accretion-type granulation), it it not uncommon to operate a cocurrent dryer with an air velocity of about 3 m/second without severe entrainment.

You are certainly correct in pointing out the importance of considering air velocity when retrofitting an existing unit, especially as it pertains to (1) the required quantity of air to achieve drying at a specific temperature and relative humidity profile, (2) entrainment, and the design of downstream dust collection and scrubbing systems, and (3) power required to operate the dryer. The effect of air velocity and material holdup, and thus power requirements, becomes especially critical in the design of countercurrent rotary coolers. Often, when one tries to increase cooling capacity by increasing the airflow, the cooler drive becomes overloaded.

Question
Roller mills are used in NSM's urea and ammonium nitrate granulation plants with more than satisfactory results. Are they applicable in conventional NPK and urea-based NPK plants?

Answer (J. J. Schultz, IFDC)
Roller mills are good for hard/crisp granules. The more soft and plastic NPKs often cause the rolls to accumulate a buildup of material and become ineffective.

Some NPK plants using roll-type crushers provide a screw-like scraper unit to keep the roll surface clean. Given a choice, I would not recommend using a roll-type crusher in an NPK plant, especially if several formulations are produced. Some formulas may crush nicely while others may be too plastic for reliable performance of the crusher.

Comment (T. Koivumaki, Kemira Oy)
I would like to offer some additional opinions about the granulation loop; I think we must always keep in mind three things:

1. Stability of granulation.
2. Quality of product.
3. Investment cost of the plant.

Remembering these things, in most cases the result is different to that which was presented by Mr. Bolds. We must also keep in mind that equipment must work like the manufacturer has promised (performance guarantee). Therefore, I suggest the following:

1. The best way to change granulation away from an "art" is to control the recycle ratio; weighing techniques provide a good way for doing this. With recycle control you can have as stable granulation conditions as possible and this is needed for the proper functioning of the whole granulation loop.

2. If you return crushed granules back to the screen, the roundness of the product is not proper. If you return it to the granulator, granules in the product are more round. This means that the crusher must work like planned (oversizing is needed). We must claim proper performance from the manufacturers of crushers. Also, with proper crusher performance, we can avoid overgranulation problems due to improper crushing.

3. Usually the investment cost is wanted to be as low as possible; thus we need to use double-deck screens (lower height, lower investment cost, lower operating cost). You have the possibility to specify what kind of screens you buy, and it is possible to get inclined double-deck screens which work properly and have the provision for cleaning both decks. The price of this kind of screen is higher than some double deck screens but the total investment cost is lower and actually the operation of this kind of screen is easier. If the screen becomes blinded (which is malfunction of the plant), there are several possibilities to control and prevent this as blinding only seldom happens suddenly. In conclusion, you have to compromise.

Comment (J. J. Schultz, IFDC)
I think Mr. Koivumaki's points are all very valid. However, as he points out, there is always a compromise between what should be done and what is actually done, depending upon your point of view. An engineer/contractor will often go for least first cost to ensure securing the contract. The owner, too, often looks for the lowest first cost. An operator (and most enlightened owners) will look for reliability, ease of operation, and minimum downtime. In short, a "forgiving" plant that can accommodate upsets without causing a shutdown. In the long run, the often small difference in capital cost between an "adequate" plant and an "optimum" plant is usually insignificant and often lower when measured in terms of dollars per tonne of product and product quality.

Mr. Koivumaki's point on controlled recycle and controlled particle size (surface area) is absolutely correct. For maintaining equilibrium, every effort should be made to achieve control of the solid phase through efficient screening and crushing which, in turn, will stabilize conditions in the granulator and make the system very smooth and stable. In short, especially with agglomeration-type granulation, smooth operation leads to even smoother operation while mildly upset operation leads to a severally upset (uncontrollable) operation.

Comment (T. Koivumaki, Kemira)
I completely agree that hot screening is more difficult and unforgiving then cold screening. However, hot screening in ammonium phosphate- and nitrophosphate-based NPKs is made quite often because of savings in energy consumption. We could not see this in the IFDC pilot-plant demonstration of 17-17-17. When the pilot plant was switched from cold to hot screening, the fuel flow into the dryer was kept constant which meant that the outlet temperature increased from 60° to 70°C and the granule size distribution in the granulator changed towards bigger granules and the whole granulation was different to that of cold screening.

To get a more real picture of hot screening, I think during the IFDC pilot-plant demonstration the granulation temperature should have been kept constant before and after the change (fuel consumption would have been

smaller). However, there probably would have been difficulties in screening at least in the long run with this kind of screen.

Question
To store bulk urea, we would need to have dehumidified air. Does this imply using reheated refrigerated air?

Answer (J. J. Schultz, IFDC)
Dehumidification is not absolutely necessary for bulk urea storage if the material is going to be reclaimed for use in a granulation unit. However, to maintain a reasonably dry floor (for safety and housekeeping reasons) it is good to keep the bulk storage building as tightly closed as possible and allow solar heat to warm the building and thus decrease the relative humidity and minimize crusting of the pile. It is also important to maintain a rapid turnover of product under such undehumidified storage conditions to minimize deep penetration of moisture into the pile. In one case that I observed, prilled urea stored under humid conditions for about 8 months was caked very hard due to deep penetration of moisture which made reclaiming very, very difficult.

Bulk urea-based NPKs must, under humid conditions of 50% relative humidity or more, definitely be stored in a dehumidified area. Heated air may be sufficient, but in many cases the air must first be chilled to remove some of its moisture and then reheated to lower the relative humidity to about 40%-50% as you indicated.

Question
Does the oil utilized to fix kaolin clay on granules have to match any particular specifications?

Answer (D. W. Rutland, IFDC)
Several types of oils (fuel, motor, lubrication, and blends) have been used for adhering clay conditioners to fertilizers with varying degrees of success. The oils which seem to be the most effective on ammonium nitrate-based NPKs are moderately viscous oils (25 to 150 mPa•s) such as lubrication oils. The oils which seem to be the most effective on urea-based NPKs are lubrication and motor oils with viscosities of around 100-200 mPa•s. Used motor oils usually have wide variations in viscosity, water content, solids, and poisons (lead, cadmium, barium) and consequently are unsuitable for fertilizer coating. Lightweight oils can be absorbed rather quickly into the granules, whereas heavyweight oils are quite difficult to spray. Typical application rates are 0.2%-0.5% at 40°-60°C.

Question
What can be the order of magnitude of crushing strength for NPK granules based on agglomeration?

Answer (D. W. Rutland, IFDC)
The crushing strength of urea-based NPKs made by agglomeration can vary quite markedly depending on many factors including chemical composition, method of production, granule structure, granule porosity, granule size, moisture content, and binder. IFDC measurements of the crushing strength of urea-based NPKs have ranged from 1.0 to 4.0 kg/granule (2.36 to 2.80 mm fraction). Refer to Table 1 in Appendix for typical crushing strength data.

Question
IFDC usually refers to Tyler sieve. Is this, or U.S. standard, the most widely used worldwide? I understand that in the United States, the U.S. standard sieve has become the official standard per AAPFCO.

Answer (D. W. Rutland, IFDC)
IFDC uses the American Society for Testing Materials (ASTM), Specification E-11-81 U.S.A. standard sieve series, which is based on sieve openings in millimeters and microns, not sieve numbers. These standard designations correspond to the values for test sieve apertures recommended by the International Organization for Standardization (ISO-565). Occasionally, depending on the audience or client requirements, IFDC will also show the Tyler, U.S., Market Grade, or Tensil Bolt Cloth number that most closely matches the sieves shown in millimeters and/or microns. Some countries use the ISO standard sieve series, some countries use their own standard sieve series, and some countries use other country standard sieve series. India has a sieve series referred to as the IS sieve series, which has identical openings to the ASTM and ISO sieve series. There are also French, English, German, Italian, and Russian sieve series.

Question
Would you please tell us more about degradation of the liquid amine-based anticaking reagent? What is the suitable temperature for addition?

Answer (D. W. Rutland, IFDC)
Amines are considered as derivatives of ammonia (NH_3) by replacing one or more of the hydrogen atoms with alkyl groups. The amine can be primary, secondary, or tertiary depending on whether one, two, or three of the hydrogen

atoms are replaced. The degradation of an amine results in ammonia volatilization. The most volatile amines are usually the low molecular weight formulas. Most primary and secondary amines must have their hydrogen(s) substituted by high molecular weight groups such as fatty acid alkyl groups to remain nonvolatile. Tertiary amines are the least volatile; unfortunately, most of the tertiary amines are quite viscous liquids or even in paste form at room temperature.

Temperature has a significant effect on the degradation of amines. Amines are applied at temperatures ranging from 30° to 120°C depending on the amine viscosity. It is normally recommended that a high viscosity amine be heated and used as quickly as possible (low retention time) to avoid degradation.

Additionally, the fertilizer temperature is important. Low temperature (30°-50°C) fertilizer should be avoided because amines will not adhere well to "cold" granules. Conversely, very high temperature (70°-120°C) may result in amine degradation.

Question
Are combinations of various types of anticaking agents used to increase the anticaking effect or to lower the cost of the agent?

Answer (D. W. Rutland, IFDC)
Combinations of different types of anticaking agents are usually used to increase effectiveness when compared to a single type of anticaking agent. This could lower or raise the cost of the anticaking agent. For example, kaolin clay is not considered to be completely effective for use on ammonium nitrate. However, kaolin clay treated with an ionic surfactant is considered to be an effective anticaking agent for ammonium nitrate. Therefore, possibly a smaller dosage of kaolin clay could be used, thereby reducing the cost. However, the additional cost of the surfactant could offset the cost savings in kaolin.

Question
Do you think dehumidified storage is necessary for storing bulk NPK products that have been conditioned?

Answer (D. W. Rutland, IFDC)
Most anticaking agents are not resistant to moisture absorption. Most conditioned fertilizers will absorb moisture to the same degree as an unconditioned fertilizer. Therefore, dehumidified storage would be required for conditioned urea-based NPKs stored in bulk. There are a few exceptions where conditioners such as plastic coatings are used not only to prevent caking but to also decrease the fertilizer's hygroscopic properties.

Question
What tests are normally performed to determine the necessity for using a coating?

Answer (D. W. Rutland, IFDC)
The methods for evaluating the caking tendency of a fertilizer (conditioned and unconditioned) can be categorized into three types: (1) large bag storage tests, (2) small bag storage tests, and (3) accelerated caking tests. There are many different variations of each of these methods (tests) being used around the world. The large bag methods are the most reliable, but require a large quantity of material, a considerable amount of test space, a significant amount of labor, and a long test period (1-12 months). The results from the small bag test methods are usually quite reliable and require much less material, space, and labor. However, as with the large bag methods, the small bag methods require a long test period. The accelerated caking test methods require only small quantities of material, minimal space and labor, and a much shorter period of time. Unfortunately time cannot be accelerated, so most of the accelerated caking tests employ an increase in temperature, pressure, and/or humidity to speed up the caking mechanisms. To date, most of these accelerated test methods have not produced reliable results. At best, these accelerated test methods can be used as "screening methods." That is, if the test sample cakes using an accelerated test, it will probably cake under normal conditions; if it does not cake, it may still cake under normal storage conditions. IFDC uses a small bag test method most frequently and a large bag test method occasionally.

Question
With regard to an evaluation of the cost/benefits of a coating agent, what are your recommendations?

Answer (D. W. Rutland, IFDC)
Making a determination of the cost-to-benefit ratio of using or not using an anticaking agent would be quite difficult. In a government-owned fertilizer system, there may be no economic benefit to a producer for using an anticaking agent. The consumer may complain because a product is caked, but if he wants fertilizer he has no choice but to buy what is available. However, if poor quality results in reduced agronomic yield, then the government loses in the long run. In a free market system, using an anticaking agent may be essential to remain competitive. First, a consumer will invariably choose a free-flowing

fertilizer over a caked fertilizer. Second, a producer can lose significant revenues if a civil law suit is decided against the producer because of a shipment of caked product.

Comparing the cost-to-benefit ratio of different anticaking agents is also not an easy task. Making such a comparison indicates that a somewhat less than free-flowing fertilizer could be acceptable. Obviously, if two anticaking agents were equally effective, the least costly agent would be used (assuming there are no safety, availability, or dilution problems). Therefore, the major question to be answered is what amount and degree of caking is acceptable. If a quantitative value could be assigned to the level of acceptable caking, then it might be possible to assign some type of cost-to-benefit ratio.

A good anticaking agent should probably be regarded more like an insurance policy. You may not need it 99 times, but the one time you do need it, and do not have it, could cost significantly in lost revenue/civil claims.

Questions and Answers
Pipe-Cross Reactor Session

Question
How soluble is the 19-19-19 made with the pipe reactor? How about 11-55-0?

Answer (M. M. Norton, TVA)
With Florida wet-process phosphoric acid, water solubilities of 91%-93% and neutral ammonium citrate solubilities of 99%-100% are typically obtained for the P_2O_5. The other nutrients are essentially 100% water soluble. The 11-55-0 grade has the same solubility as the 19-19-19 grade. More impure wet-process acid causes increased P_2O_5 insolubility in the final product.

Question
It is said that the maximum capacity of the pipe reactor is 400-500 mtpd in terms of DAP whereas nowadays DAP plant capacities range between 1,000 and 2,000 mtpd. Thus, a preneutralizer must be added to the pipe reactor. What are the limiting factors for a higher capacity with the pipe reactor?

Answer (M. M. Norton, TVA)
One installation in Florida, using a 10-inch diameter pipe, produced 55 stph of DAP and 60 stph of ammonium polyphosphate. Higher rates from this size pipe or from larger pipes may be possible; however, we have no first-hand experience.

Question
Would it be possible to have two pipe reactors in the same granulator so as to avoid using a preneutralizer to achieve a high capacity?

Answer (M. M. Norton, TVA)
Yes, as long as there is sufficient space to install the reactors and distribute the melt.

Question
What is the construction material for a pipe reactor in the case where sulfuric acid is used together with phosphoric acid?

Answer (M. M. Norton, TVA)
Hastelloy C-276 is recommended.

Question
Mr. Norton mentioned the British using urea and single superphosphate (SSP) to make a 20-10-10 and 14-14-14. Has TVA done any work on this and, if so, what were the results? Are the British still using this process?

Answer (M. M. Norton, TVA)
The British used SSP as the principal P_2O_5 source for these grades. Usually a small amount of phosphoric acid was also used to furnish liquid-phase and heat in the granulator. Often an open flame from either a gas or oil burner was also employed inside the granulator to control granulation. I do not know the present status of this practice.

Question
When using the following materials for granulation – NH_3, Technical grade H_3PO_4, urea, KNO_3, H_2SO_4, and water – where would it be best to add them?

Answer (M. M. Norton, TVA)
NH_3 – Pipe-cross reactor (PCR), perhaps a portion to the granulator to control PCR mole ratio at less than 1.

H_3PO_4 (technical grade, 60% P_2O_5) – PCR

Urea (industrial grade) – Granulator either as solid or melt

KNO_3 – Granulator

H_2SO_4 – PCR

Water – PCR to control temperature

Question
If MAP was to be made using the pipe reactor, what is the highest recommended temperature in order to get the material dry enough to avoid using a dryer?

Answer (M. M. Norton, TVA)
Normally with typical Florida wet-process phosphoric acid at a concentration of 46%-47% P_2O_5 and a pipe-cross reactor temperature of 280°-300°F (138°-149°C), a good quality granular product can be produced without drying. A lower product moisture may be required if technical grade phosphoric acid is used because impurities which improve the product storage properties are not present in the technical grade acid.

Question
When using the pipe-cross reactor for producing NPKs, what precautions should be taken to ensure that the granules are homogeneous?

Answer (M. M. Norton, TVA)
It is important to control the raw material feed rates to ensure sufficient liquid phase for granulation. Also, a sufficiently fluid melt/slurry that can be uniformly distributed must be produced. The correct size and configuration of the melt/slurry distributor is also important in achieving even distribution that is essential to the formation of homogeneous granules.

Question
What exactly are the differences between 28-28-0 produced by the melt process and the pipe-reactor (PCR) process?

Answer (M. M. Norton, TVA)
The pipe-reactor process is also a melt process, so there should be no differences. Some variation in the operating temperature of the PCR is required if you wish to produce a product containing significant levels of polyphosphate.

Question
How do you control the temperature of the pipe reactor? Is sophisticated instrumentation required?

Answer (M. M. Norton, TVA)
The temperature inside the pipe-cross reactor (PCR) is controlled primarily by the addition of water, although adjustment of the NH_3:H_3PO_4 mole ratio and feed rates can have some effect on the temperature. There is essentially no difference in control of the PCR as compared to instrumentation required for a preneutralizer (e.g., meters for ammonia, phosphoric acid, sulfuric acid, and a thermocouple to measure the PCR temperature). In addition, the PCR can be more easily and quickly started up and shut down than the conventional preneutralizer.

Question
Can you give some dimensioning criteria of the pipe-cross reactor? How easy is it to scale up the pipe-cross reactor from pilot scale to industrial scale? Do you have any experience with this type of scale-up?

Answer (M. M. Norton, TVA)
The design criteria is given in the paper which is included in the proceedings (refer to page 50). The first pipe-cross reactor was installed in a commercial plant so the pilot-plant pipe-cross reactor was actually "scaled down." We have had good success in designing commercial-scale reactors for the production of NPK products. At one time, in the 1980s there were more than 25 pipe-cross reactors installed in U.S. NPK fertilizer plants.

Question
What is the temperature of the granulator discharge material while using the pipe-cross reactor with an NPK formulation containing urea? Is it necessary to have an additional fan for cooling the material in the granulator?

Answer (M. M. Norton, TVA)
The material discharged from the granulator is usually within the range of 170°F (77°C) and 185°F (85°C); the optimum temperature varies with the product formulation.

An additional fan is not required; however, many NPK plants may require modification of the existing exhaust system to increase the airflow through the granulator to remove the extra water vapor produced by the pipe-cross reactor. With a preneutralizer, part of the water is evolved in the preneutralizer and part in the granulator; with a pipe-cross reactor all the water is evolved in the granulator and it must be removed by proper ventilation.

Question
Have you tried a pipe-cross reactor (PCR) for making a 20-20-0 ammonium phosphate sulfate grade?

Answer (M. M. Norton, TVA)
No, but we have produced a 12-24-12 ammonium phsophate sulfate product using the PCR.

Question
Is it workable to use the combination of a pipe-cross reactor (PCR) and a conventional preneutralizer system, so that a new PCR can be introduced in a conventional plant?

Answer (M. M. Norton, TVA)
Yes, this was done in one of the early plants in the United States to produce granular DAP with a pipe-cross reactor. The PCR was used to supplement the slurry produced in an existing preneutralizer to increase the total production rate.

Question
What are the reasons for limiting the ratio between phosphoric acid and sulfuric acid to a maximum of 1:1 in the pipe-cross reactor?

Answer (M. M. Norton, TVA)
Although a wide range of H_2SO_4:H_3PO_4 feed ratios to the pipe-cross reactor can be used, a higher ratio than the recommended 1:1 will increase the corrosion rate in the reactor. In instances where relatively large quantities of sulfuric acid have been used, reactor life has been significantly shortened; sometimes to less than 5,000 short tons of product. If the recommended guidelines are followed, a reactor life of 100,000 short tons or more can be expected. In one case a life in excess of 300,000 short tons was reported.

Question
Do you have information about the ammonium sulfate pipe reactor of INCITEC (Australia) or the ammonium nitrate pipe reactor of AZF (France), and what is your opinion of these developments?

Answer (M. M. Norton, TVA)
Information on the INCITEC reactor is proprietary and is limited to that given in publications. I have no information on the AZF reactor other than what has been published.

Question
If a contracting company wants to acquire the license for the TVA PCR technology for a project, how is this done?

Answer (M. M. Norton, TVA)
For licensing information for the TVA PCR technology you may contact:
Marketing Department
Tennessee Valley Authority
National Fertilizer and Environmental Research Center
P.O. Box 1010
Muscle Shoals, Alabama 35630, U.S.A.
They will give you any information that you may require.

Question
How do you adjust the pressure inside the pipe-cross reactor (PCR)? What are the pressures of NH_3, H_2SO_4, and H_3PO_4 fed to the PCR? What is the operating pressure of the PCR?

Answer (M. M. Norton, TVA)
The pressure inside the PCR is controlled primarily by the size of the opening in the melt distributor. Of course, feed rates have an effect on the pressure for a given size melt distributor opening.

The supply pressures of each of the feeds should be at least 60 psig (4.2 kg/cm^2); 80 psig (5.6 kg/cm^2) is preferred to give a margin of safety.

Pipe-cross reactors have been operated over a pressure range of about 5-125 psig (0.4-8.8 kg/cm^2). Commercial installations in NPK plants are typically operated between about 30 and 50 psig (2.1-3.5 kg/cm^2).

Question
How does one clean a plugged nozzle of a pipe-cross reactor?

Answer (M. M. Norton, TVA)
The most effective method for cleaning a plugged nozzle in a PCR is to flush it with a hot aqueous alkaline solution (i.e., steam + water + ammonia); often steam alone is sufficient. Sometimes while the pipe-cross reactor is still in operation, feeding an extra quantity of water or sulfuric acid for a short period will clean the reactor.

Question
How does one avoid plugging of the pipe-cross reactor?

Answer (M. M. Norton, TVA)
Buildup that causes plugging is usually either solidified melt or a scale buildup caused by acid impurities. Keeping the temperature below 300°F (150°C) and maintaining a suitable ammoniation ratio will minimize buildup; however, buildup is worse with some acids because of the impurity ratio. A maximum (Fe_2O_3 + Al_2O_3 + MgO) - to - F ratio of 3 is suggested.

Question
How does one take a sample of the pipe-reactor discharge material (melt) for mole ratio analysis?

Answer (M. M. Norton, TVA)
It is difficult to obtain a melt sample in a commercial size granulator during operation. Some operators have used sampling valves installed in the reactor tube just before it enters the granulator; however, there is no evidence that good, consistent samples can be obtained using such a sampling system.

Question
What are the advantages of having polyphosphate in NPKs? How much polyphosphate can we have in an NPK and how can this be achieved?

Answer (M. M. Norton, TVA)
In many cases the presence of polyphosphate results in better quality and higher grade (analyses) fluid fertilizers produced from solid materials. Polyphosphates may improve the storage characteristics of a granular product by acting as a moisture sink as the polyphosphate component hydrolyzes back to the orthophosphate form. There is no indication that polyphosphates are agronomically superior to orthophosphates.

NP products previously made at TVA (28-28-0 and 35-17-0) contained about 20% and 35%, respectively, of their P_2O_5 in the polyphosphate form. Pipe-reactor temperatures above 400°F (204°C) are needed to form this level of polyphosphate.

Question
What are the criteria for selecting the rotational speed of the granulator?

Answer (M. M. Norton, TVA)
The actual rotational speed of the granulator is usually between 40% and 45% of the critical speed. This was determined by experience. The equation for critical speed, expressed in rpm and English units follows:

$$\text{critical speed (rpm)} = \frac{76.5}{\sqrt{\text{Drum Diameter (ft.)}}}$$

Answer (J. J. Schultz, IFDC)
With agglomeration-type granulation typically used for many NPK formulations, a slightly slower granulator speed is often preferred. For example, very good results are often obtained at speeds in the range of 25% to 30% of critical. This slower speed is also beneficial from a mechanical point of view if a number of spargers are located beneath the bed of material. For example, three spargers, one each for sulfuric acid, steam, and ammonia.

Question
The volumetric ratio seems to be high in the TVA granulator. What is the reason?

Answer (M. M. Norton, TVA)
TVA uses a retaining ring height equivalent to 20%-25% of the drum diameter (for example, a 9-inch retaining ring in a 3-ft diameter granulator). This material volume (bed depth) results in maximum retention of NH_3.

Question
The exit temperature of solids from the granulator seemed to be higher in the TVA pilot plant demonstration than in the IFDC pilot plant but the product did not stick together; what could be the reason?

Answer (M. M. Norton, TVA)
The TVA material was basically ammonium phosphate melt coated on urea. Therefore, the material could be heated more without melting or softening. The material produced in the IFDC pilot plant had the urea distributed throughout the structure of the granule; thus, it was more heat sensitive.

Question
What is the chemical composition of Hastelloy C-276 used in the pipe-cross reactor?

Answer (J. J. Schultz, IFDC)

Composition of Hastelloy C-276.

Element (Maximum)	%
C	0.015
Cr	16.0
Ni	57.0
Mo	16.0
Ti	Trace
Fe	Balance

Source: *Chemical Engineering*, May 28, 1984, page 119.

Question
Mr. Norton, according to your presentation, the use of the TVA pipe-cross reactor (PCR) is a successful commercial practice worldwide. Could you give examples of such companies using the PCR; especially Third World countries.

Answer (M. M. Norton, TVA)
Countries known to be using PCR technology include Greece, Turkey, Brazil, South Africa, and Spain. For more details concerning plant locations contact:

Marketing Department
Tennessee Valley Authority
National Fertilizer and Environmental Research Center
P.O. Box 1010
Muscle Shoals, Alabama 35660, U.S.A.

Question
In the pilot-plant demonstrations (TVA and IFDC), a heater (rotary dryer) was used to dry the product. What is the significant savings over the preneutralization operation in terms of fuel?

Answer (M. M. Norton, TVA)
The pipe reactor saves 40%-50% on fuel cost with many NPK grades. MAP can be produced without any heat so the saving is 100%.

Answer (J. J. Schultz, IFDC)
In the case of the IFDC demonstration, the use of a dryer is essential. Typical fuel consumption for drying (in a commercial-scale plant) amounts to about 7 kg oil (70,000 kcal) per metric ton product.

Question
What is the difference in crushing strength of product between the two modes of operation (TVA and IFDC)?

Answer (J. J. Schultz, IFDC)
In the particular demonstrations that you observed with urea-based 17-17-17, the average crushing strength with the IFDC process and formulation was about 1.8 kg whereas the TVA process resulted in a typical crushing strength of 2.8 kg when sulfuric acid was used (fed to the pipe-cross reactor) and about 1.9 kg when the sulfuric acid was replaced with crystalline ammonium sulfate fed directly to the granulator.

Question
How do you measure the mole ratio of the material leaving the granulator?

Answer (M. M. Norton, TVA)
A double titration method can be used to determine the exact mole ratio. For in-plant use a pH determination is sufficient for control purposes. For this we use a slurry containing 10% fertilizer and 90% distilled water.

Question
In the TVA pilot-plant demonstration I noticed that the melt discharges from the PCR in an on-and-off fashion. Does this affect the nutrient content of the product?

Answer (M. M. Norton, TVA)
The discharge of melt from the PCR is sometimes cyclic but this does not affect the final grade of the product. The flow of melt can be made smooth and even by adjustment of pipe discharge opening.

Question
What is the mechanism of granule formation using the PCR? Does the melt solidify as soon as it discharges from the pipe reactor?

Answer (M. M. Norton, TVA)
The melt slowly solidifies as it rolls in the granulator; it does not form granules or prills in air. The granules are formed largely by layering. Sometimes granules stick together as melt solidifies, thus some agglomeration also occurs.

Questions and Answers
Panel Discussion on Plant Operating Experience

Question
Please describe your experience with foaming in the scrubber system when producing urea-based NPKs. How do you solve the problem?

Answer (S. K. Chatterjee, ZACL)
We have experienced many foaming problems in our scrubbing system due to carryover of urea dust. The amount of foaming also depends on the quality of the phosphoric acid. We normally use an antifoamer. We have also used steam in the scrubber liquor tank with limited success.

Answer (T. Ramaswami, NAFCON)
When the cyclones plug, dust carryover to the scrubbers is excessive, resulting in increased foaming. The continuous addition of a small quantity of antifoam (e.g., oleic acid) helps. It is also extremely important to keep the cyclones clean and in good working order.

Answer (T. A. Sankaran, FACT)
Foaming has been severe in our scrubbing system while making urea-based grades. One method used to control this was to minimize urea dust in the system getting carried along with the air into the scrubbers. The second method used was a continuous addition of defoamer.

Answer (S. Ramadurai, Coromandel)
Foaming occurs in our plant while producing urea-based NP and NPK products. It also depends to a certain extent on the quality of phosphoric acid used in the slurry process (e.g., the organic content in the acid). The foaming is controlled by the use of antifoaming agents. A controlled quantity of antifoaming agent is continuously introduced into the scrubber system. The antifoaming agent generally used is a synthetic material, such as ethylene oxide condensates or esters of alcohols. The suitability of each antifoaming agent has to be determined in the plant.

Question
Please comment on your experience and recommendations regarding weigh-belt feeders.

Answer (S. K. Chatterjee, ZACL)
The present-day electronic weigh feeders are quite reliable. However, they need frequent cross-checking by manual sampling.

Answer (T. Ramaswami, NAFCON)
Good reliable weigh feeders are essential; they should be equipped with recorders. Physical calibration (cross-check) of the feed rates is very essential and is probably the only sure way of ensuring correct feed rates.

Answer (T. A. Sankaran, FACT)
The reliability of our belt-type weigh feeders has been generally poor. Hence, frequent cross-checking has to be done by actual weighing of the material for a fixed period of time.

Answer (T. Ramadurai, Coromandel)
Accuracy is quite satisfactory. Ramsey weigh feeders are used. Physical calibration is being done to check accuracy; this is very important.

Question
Please comment on your experience with maintaining an acceptable water balance in your plant while producing urea-based NPKs or urea-free 20-20-0 in the case of FACT.

Answer (T. Ramaswami, NAFCON)
The principle mechanism/art (whatever you call it) depends on maintaining a water balance not only in the granulation loop but in the entire plant. As a low temperature is essential for drying urea-based NPKs, the technique commonly practiced in making urea-based NPKs in a "typical" DAP plant is to slow down the dryer speed, thereby increasing the retention time while running the dryer at a low inlet air temperature (about 130°-140°C). However, this does not work well because the moisture content of the material discharged from the dryer is higher than desired. Plasticity is another problem; this, together with a high moisture content affects screening making continuous cleaning of screens necessary. If a cooler or "second-stage dryer" is located

after the dryer, most of these problems with screening would be eliminated and the plant water balance would improve due to additional evaporation in the second-stage dryer.

Answer (T. A. Sankaran, FACT)
While making 20-20-0, we use phosphoric acid of 22% P_2O_5 concentration, sulfuric acid, and ammonia vapor as raw materials; urea is not used. Normally we take the phosphoric acid through the scrubbers, and the scrubber liquor is sent to the preneutralizer. Any additional water required to maintain the specific gravity of the scrubber liquor and the slurry is added either to the reactor or scrubber acid tanks. In this way, we have no problem in maintaining the overall plant water balance.

Answer (S. Ramadurai, Coromandel)
The water balance is the most important parameter for controlling granulator performance in slurry granulation of urea-based NP and NPK products. Proper control of the mole ratio in the reactor, maintaining the strength of the acid at desired levels, and the recycle of the effluent water back to the process are the factors most closely watched to obtain an acceptable water balance in our process.

Question
Tell us more about your rubber lining in the granulator drum.

Answer (T. A. Sankaran, FACT)
Rubber panels (belt strips) of 1 m width are loosely fixed on the inside surface of the granulator. While rotating, these rubber panels move with a breathing-type action. This movement prevents material from sticking on the surface. For making this breathing action effective, breathing holes are drilled in the shell to allow air to move in and out.

Answer (T. Ramaswami, NAFCON)
Loose rubber panels (10 in number) are bolted to the granulator shell longitudinally. Stainless steel bolts are used. The rubber should be able to withstand high temperature; synthetic rubber is preferable. Performance has been quite satisfactory. An average life about 10-12 months can be expected depending upon service and conditions.

Answer (S. Ramadurai, Coromandel)
Currently at Coromandel we do not have rubber panels in our granulator, but we are considering the addition of this modification.

Comment (J. J. Schultz, IFDC)
In addition to what the others have said, I have observed very good service of the liner if the individual panels are attached to the granulator shell using a stainless steel "keeper" that runs the full length of each rubber panel joint. The "keeper" is about 1 cm thick and wide enough (about 12 cm) to permit the use of two rows of stainless steel attachment bolts (one row along each rubber panel edge). This method of attachment protects the panel edge and prevents material from working its way between the rubber panel and the shell of the granulator.

Question
Do any of your companies use filler in your formulations?

Answer (T. Ramaswami, NAFCON)
Yes, at NAFCON river sand or sand dredged from a creek is commonly used in our NPK plant as filler. For example, in our 15-15-15 grade about 200 kg/tonne sand is used. Sand that is less than 1.5 mm in size, dry, and free flowing is preferable.

Answer (S. Ramadurai, Coromandel)
The formulation at Coromandel are very concentrated (28-28-0 and 14-35-14) and no filler is used.

Question
Please comment on your bag collector. Is it on the product cooler? What problems do you have? Would you recommend using a bag collector on urea-based NPKs?

Answer (T. Ramaswami, NAFCON)
We have reverse air pulse-type bag collectors for the product cooler only. Most of the time the collector does its job okay, except in overload conditions. A problem occurs when the plant is shut down and moisture ingress occurs. This moisture causes plugging of the outer surface of the bags with a cement-like formation resulting in increased pressure drop. During plant shutdown we remove up to 25% of the bags for washing, drying, and reuse. A cyclone would probably be a simpler device although it may not be as effective; for trouble-free operations I would prefer cyclones.

Comment (J. J. Schultz)
With the exception of NAFCON, none of the other plants represented by the panel members (Zuari, Coromandel, and FACT) use bag-type dust collectors.

Question
Could you please describe the coating system (materials) that you use. Does the oil have an odor?

Answer (T. Ramaswami, NAFCON)
We spray gas oil (furnace oil light) in our coating mixer – a ribbon mixer – and then coat the product with fine clay powder (minus 325-mesh) which is kaolin in our case. The product does have a slight odor but we have not faced any marketing problems.

Question
I would like your opinion on belt conveyors versus drag conveyors.

Answer (T. Ramaswami, NAFCON)
I would certainly prefer belt conveyors over drag conveyors. Drag conveyors cause many problems; they are very difficult to maintain and clean.

Question
Mr. Sankaran, you indicated that you had coating agent problems before changing from urea-based NPK to ammonium sulfate/phosphate-based 20-20-0. Are you using the same coating agent or a different one? If so, what type are you using?

Answer (T. A. Sankaran, FACT)
Ammonium sulfate/phosphate 20-20-0 is less hygroscopic in nature than urea-based NP or NPK. Therefore, we have been able to completely eliminate the use of a coating agent.

Question
Mr. Sankaran, according to your earlier experiences, would you now have enough knowledge to build a urea-based NPK plant which would operate well?

Answer (T. A. Sankaran, FACT)
From our past experience we have identified the problem areas. Therefore, with a proper plant design and the use of quality raw materials we could make urea-based grades successfully.

Question
Of the total phosphoric acid feed to the process for 19-19-19, what percentage do you find to be best to feed to granulator?

Answer (S. K. Chatterjee, ZACL)
We find that the use of between 15% and 20% of the acid to the granulator is preferred.

Question
Mr. Chatterjee, what type of dehumidification system do you have at ZACL? Could you please draw a diagram of the system.

Answer (S. K. Chatterjee, ZACL)
At ZACL we have a lithium chloride-type system. Refer to Mr. Polo's paper (page 68) for a diagram of this type of dehumidification system.

Question
Do you use a conditioner on your urea-based 19-19-19? If so, what type?

Answer (S. K. Chatterjee, ZACL)
We do not use any conditioner on our 19-19-19.

Question
Tell us something about the joint venture arrangement between NAFCON and Kellogg. What are the responsibilities of each company? Are you satisfied with the joint venture cooperation?

Answer (T. Ramaswami and B. Ajala, NAFCON)
The joint venture was negotiated by the Federal Government of Nigeria through the Ministry of Industries with the M. W. Kellogg Company of Houston, Texas. The agreement specified that M. W. Kellogg would operate the fertilizer plant after commissioning and give adequate training to qualified Nigerian operators, technicians, and engineers who would eventually take over the plant operations within a specified timeframe.

NAFCON evolved as a result of the joint venture agreement and has been operating within the terms of the agreement. NAFCON is satisfied with the agreement; the classroom training was completed while the on-the-job training is about to be completed. It is hoped that very soon the Nigerian operations personnel will be capable enough to operate the plant successfully. Currently, various technical positions are in the process of being Nigerianized.

Question
Mr. Mohd. Salleh, would you please elaborate on the term SIRIM?

Answer (Mohd. Salleh, FPM)
SIRIM stands for Standards and Industrial Research Institute of Malaysia. This government body inspects

commodities, including fertilizers, to ensure that they meet the manufacturers' stated guarantees/claims. The SIRIM chop (seal) of approval is granted only after careful inspection of the process and product. The approval can be withdrawn at any time the standard of operation and product do not meet the inspection criteria. FPM currently has all of its major NPK grades (11) approved by SIRIM and each 50-kg bag bears the SIRIM chop. This chop is very important for effective marketing because it gives the customer confidence in the product and the company that produced it.

Question
Mr. Mohd. Salleh, from your presentation, it is obvious that your plant location is in a high humidity region of Malaysia. Considering the effect of high humidity on urea-based NPK products, would you please explain how you handle the humidity problem, if any, in your NPK plant and bulk storage building.

Answer (Mohd. Salleh, FPM)
Yes, we have very high relative humidity (RH) at the plant site (typically 60%-100%). We have two refrigeration units, each of 250 tonnes refrigeration capacity. These units produce chilled water which is used to cool fresh (humid) makeup air. The chilled air (at near 100% relative humidity) is exhausted into the process plant where it is naturally reheated by machinery/process heat and solar heat to decrease the RH to about 50%. The upper regions of the plant are usually about 35%-40% RH because of the solar heat load near the roof and the natural rise of hot air in the building. This is good because the screens stay very dry as they are located high in the building.

The same idea is used to dehumidify a small bulk storage area (about 1-2 days production). However, since there is no process heat (for example, radiation from dryer) in the bulk storage building, a steam coil is used to reheat the chilled air to lower its RH from a saturated level to about 40%.
Most of the time we can obtain sufficient dehumidification of the process plant and bulk storage area by using only one of the 250 tonnes refrigeration units. The other unit is held in standby.

Question
Are NPKs containing insoluble P in common use? How is the nutrient uptake compared with soluble P? How much time is required from initial startup of the plant until steady conditions are reached for NPKs containing insoluble P and for NPKs based on DAP (containing soluble P)?

Answer (Mohd. Salleh, FPM)
NPKs based on insoluble P are not too common worldwide. They are most frequently used on acid soils and on tree crops. As rubber and palm are the major crops in Malaysia and most soils are acid, the water insoluble P fertilizers are the most cost-effective type and they are widely used. When a more soluble P is required for some crops we use solid DAP (crushed) in combination with phosphate rock to obtain the required water soluble/water insoluble ratio.

Steady state operation can be obtained in about 2-4 hours with most insoluble P formulations. We do not use a preneutralizer so I cannot comment how much time would be required for such DAP-type formulas. However, when we use crushed DAP as a source of soluble P, we see no difference in the time required to achieve steady state operation compared with the insoluble P formulas.

Question
Mr. Mohd. Salleh, you said solid raw materials are batch weighed into a surge bin and fed through a variable speed screw conveyor into the granulator. How do you ensure proper mixing of the various raw materials? What is the capacity of the surge bin? Do you cross-check the feed rate of material discharge from the screw conveyor?

Answer (Mohd. Salleh, FPM)
Proper mixing is obtained by weighing the individual ingredients in a sequential way to obtain primary mixing in the weigh hopper. Further mixing is accomplished by coning as the batch of material falls from the weigh hopper into the surge hopper. Finally, we have greatly improved the mixing by weighing 12 batches per hour instead of 6 batches. Coning of the larger number of smaller batches provides improved mixing. In the future, we may add a special mechanical mixer but analysis of the product indicates that a very good mix is already being achieved. A mechanical mixing step would be an advantage for those grades requiring small amounts of micronutrients or binders (granulation aids). We currently feed micronutriennts on a continuous basis by metering the micronutrient onto the recycle belt conveyor; this gives a very uniform distribution of the micronutrient throughout the mix as indicated by the chemical analysis of the product.

The surge bin has a working capacity of about 4 tonnes.

Cross-checking of the batch weighing operation (number of batches per hour and per shift) is frequently cross-checked to ensure that the solid feed rate is constant and that it matches the flow of urea solution that is fed with a magnetic flow meter. Checking is done by simply

observing the time required for the variable speed screw to feed a single batch of material from the surge hopper.

Question
Mr. Mohd. Salleh, I got the feeling that you have managed very well with your project. Referring to the cases we heard yesterday, can you comment on what have been the most important things that you did to achieve this success? Also, could you please compare process differences?

Answer (Mohd. Salleh, FPM)
I feel that the FPM project was successful despite the large amount of urea used because we did the basic research to arrive at the correct process design for the urea-based grades. We did not simply purchase a process without knowing for sure that it would work. Also, no engineering company was willing to sell us a process with guarantees so we did our own test and development work with the help of IFDC. The IFDC pilot plant tests provided the basis for the process design that we used. The main features of the process are (1) an extra long granulator, (2) a very large dryer operated at low temperature, (3) a process cooler (second stage dryer), (4) screening on single-deck screens located after the process cooler, and (5) a dehumidified process plant building and bulk storage building.

Another major factor leading to the success of the project has been training. Early on, with the help of IFDC we provided training for all levels of staff in our company–the executives as well as the operators. Even though the plant operates very well, we must constantly work on correcting the many small problems that appear on a daily basis. This is done by having a very participatory-type management scheme at the plant that involves everyone, including operators, supervisors, laboratory staff, maintenance personnel, warehouse/shipping/receiving personnel, as well as the senior management and administrative staff.

The FPM formulas are more difficult than most of the DAP-based formulas discussed earlier because we use a very large amount of urea (25%-35%) and we also use kieserite ($MgSO_4 \cdot 1H_2O$) in most grades which increases the hygroscopic properties of the product even more than straight urea-based NPKs. Also, we manufacture a wide range of grades, 12-15 different formulas which all have their special properties and problems.

Questions and Answers
Compaction/Granulation Technology

Question
When the plant capacity is 28 tph using granulated DAP, prilled urea, and powdered limestone, what is (1) the expected finished product/fines ratio, (2) the size distribution of the discharge from the primary crusher, and (3) the amount of kaolin that should be used?

Answer Question 1 (C. Fayard, TECHNIFERT)
The product/fines ratio is greater or equal to about 1 to 1.15.

Answer Question 1 (W. Pietsch, Koppern)
Product yield would be between 40%-50% for a product/fines ratio of about 0.7-1.0.

Answer Question 1 (D. Alt, Sackett)
I would expect the fines recycle-to-product ratio to be in the range of 1.5:1.0 to 2.0:1.0.

Answer Question 2 (C. Fayard, TECHNIFERT)
The oversize would typically be 60%, the on size 20%, and the fines 20%.

Answer Question 2 (W. Pietsch, Koppern)
The crusher discharge would contain about 20% fines passing 16-mesh Tyler.

Answer Question 2 (D. Alt, Sackett)
The discharge from the primary crusher (sheet crusher) contains only a small amount of product-size material (about 10%).

Answer Question 3 (C. Fayard, TECHNIFERT)
The product is coated with amine-treated kaolin or talcum powder at 0.3% and paraffinic oil at 0.4%.

Question
Are there any guidelines for granule particle size such as SGN (Size Guide Number), UI (Uniformity Index), or maximum particle size?

Answer (M. O. Klein, IFDC)
The Canadian Fertilizer Institute (CFI) has developed a Guide of Material Selection for the Production of Quality Granular Blends. The use of this concept is totally voluntary. Among the users is the Canadian potash industry.

Question
Almost every company or country seems to have their own in-house test. Particle breakage can only be compared on an internal company basis. Are there additional standard tests for attrition (friability, breakage) being developed?

Answer (P. Hervieu, Sahut-Conreur)
Most of the tests in use consist of a round vibrating screen (Tyler Ro-Tap style) containing the product and several steel balls. Other methods measure the attrition in a small pneumatic circuit or in a rotating drum. Yet others take the resistance per granule, as is the case in testing pharmaceutical granules. In general, each company has its own in-house tests and apparently there is no project to standardize these methods.

Answer (C. Fayard, TECHNIFERT)
There are a lot of tests, too many.

Question
What are the guidelines for attrition (percentage) for good to high quality fertilizer products?

Answer (P. Hervieu, Sahut-Conreur)
The reference test often used for comparison of NPKs is to compare the product with compacted KCl.

Question
With compaction, should bucket elevators and conveyors be insulated to minimize flake and product cooling to aid curing?

Answer (W. Pietsch, Koppern)
The product cures as it cools, therefore insulation is not recommended.

Answer (D. Alt, Sackett)
In most cases the material should be allowed to cool to aid curing, thus insulation is not desired.

Answer (C. Fayard, TECHNIFERT)
Insulating bucket elevators and/or the injection of hot air to remove the moisture from elevators and dust proof conveyers are recommended.

Answer (F. A. Dalton, FERQUIGUA
On the contrary, cooling aids the curing process. At Ferquigua, a belt conveyor is installed between the compactors and the bucket elevators feeding the screens and mills. The purpose is to permit flake cooling to aid curing.

Answer (M. O. Klein, IFDC)
Curing of flake/product involves some degree of cooling. Condensation of moisture on the flake/product should be avoided. Such condensation can be controlled by ventilating elevators, conveyors, and surge bins with dehumidified (dry) air.

Question
What is the highest temperature of the flake leaving the compactor?

Answer (W. Pietsch, Koppern)
The temperature difference between the raw material feed and the flake is between 20° and 30°C.

Answer (P. Hervieu, Sahut-Conreur)
In our experience, flake temperatures between 40°-50°C could be achieved under high compaction pressures.

Answer (C. Fayard, TECHNIFERT)
A temperature rise between 20° and 30°C above the temperature of the raw material can be expected.

Answer (F. A. Dalton, FERQUIGUA)
For products requiring a high compaction pressure, a temperature rise of about 30°-40°C is observed.

Question
Could ammonium nitrate-based NPKs be produced by compaction, and if so what is the highest allowable nitrogen content without the danger of explosion?

Answer (W. Pietsch, Koppern)
It depends on other compounds (no organics). Maximum levels are 20% N (about 60% ammonium nitrate) can be compacted; however, avoid this high level if possible.

Answer (C. Fayard, TECHNIFERT)
Ammonium nitrate could be used at a level of up to 25% provided the following conditions are met:

a. Organic matter is not used in the formula.
b. Moisture content is low.
c. pH of the formula is higher than 5.5.
d. Special care must be taken when copper salts are used.

Answer (F. A. Dalton, FERQUIGUA)
The potential for explosion depends mainly on the organic matter present in the formula.

Question
What is the highest possible content of nitrogen in a urea-based NPK?

Answer (W. Pietsch, Koppern)
The maximum urea content is between 30% and 40% with an average of 35%. Lower levels should be used in the tropics.

Answer (C. Fayard, TECHNIFERT)
Maximum content is 30% N (about 65% urea).

Answer (F. A. Dalton, FERQUIGUA)
At FERQUIGUA, the maximum content of urea we use ranges from 25% to 30% depending on the humidity of the environment. Higher levels may be used, but product quality decreases.

Question
What is the largest capacity compactor available on the market?

Answer (W. Pietsch, Koppern)
The capacity depends upon the formulation. Compactors for potassium chloride have up to 100 tph flake throughputs.

Answer (C. Fayard, TECHNIFERT)
Average throughput (flake capacity) of the largest compactor is about 100 tph.

Answer (P. Hervieu, Sahut-Conreur)
The largest capacity based on flake throughput is 100 tph (for potassium chloride). On the basis of product, the capacity depends mainly on the desired size range of the product and the feed materials. In the case of potassium chloride, this flake capacity (100 tph) can produce 40 tph product and about 30 tph (or more) product for other (NPK) fertilizers depending upon the NPK formulation.

Answer (M. O. Klein, IFDC)
The largest compactor capacity for potassium chloride is 100 tph of flake.

Question
What is the caking tendency of compacted products compared to those produced through wet granulation?

Answer (C. Fayard, TECHNIFERT)
In general, the caking tendencies of compacted products are not very high. However, the critical relative humidity of the formula must be considered. The caking tendencies can be lowered by the addition of multiple hydrates to stabilize the moisture. Coating will also play a significant role in decreasing caking in tropical countries.

Answer (W. Pietsch, Koppern)
The caking tendencies of compacted materials are usually quite low because of their dryness (low-moisture content).

Answer (F. A. Dalton, FERQUIGUA)
The caking tendency of a compacted fertilizer depends on its hardness and composition. A soft compacted fertilizer with a high urea content will cake more easily than a hard compacted fertilizer with no urea (compacted borate, for example). Thus, it is difficult to generalize.

Answer (J. J. Schultz, IFDC)
As indicated by Mr. Dalton, it is risky to generalize about expected caking tendencies of granular fertilizers. Too many variables are involved to make a reliable prediction. The major disadvantage of compacted NPKs is their irregular particle size and shape (rough texture). This causes a greater granule-to-granule contact area, thus increasing the probability of caking compared with well-formed, spherical granules, assuming all other factors are equal. The only sure way to know is to perform comparative tests under controlled conditions.

Question
Why is a cage mill used to crush the raw material in the feed to the compactor in the Guatemala plant?

Answer (W. Pietsch, Koppern)
To provide a better size distribution of the feed material to the compactor.

Question
How long do the compactor rollers last when abrasive materials such as ground phosphate rock are used?

Answer (W. Pietsch, Koppern)
No specific answer is possible since the amount of wear depends on the source of the phosphate rock. Estimates indicate about 30,000 tonnes of product (about 100,000 tonnes flake) as a minimum; the rollers can be rebuilt (resurfaced) to offset wear.

Answer (C. Fayard, TECHNIFERT)
From 5,000 hours to over 10,000 hours of operation can be expected before the rolls must be resurfaced. One of the key factors effecting wear is the quartz content of the feed material.

Question
Other than product presentation (appearance), what are the other reasons for using small particle size materials in the feed to the compactor?

Answer (C. Fayard, TECHNIFERT)
The small particle size is needed to obtain the exact formula in each granule. Also, it is generally desirable to grind the raw material so that it has a maximum size corresponding to one-third the size of the smallest granule size indicated in the specification of the product.

Answer (F. A. Dalton, FERQUIGUA)
Process segregation is minimized with decreased raw material particle size. Also, intermolecular forces of attraction (which aid the compaction processes) increase with decreasing particle size.

Question
What is the smallest capacity compactor presently available for commercial use to manufacture fertilizers?

Answer (C. Fayard, TECHNIFERT)
The smallest practical (economic) unit produces about 5-10 tph product depending on the added value of the finished product. In technical terms, it is possible to build a compactor that will produce as little as 0.5 tph.

Answer (W. Pietsch, Koppern)
Units as small as 0.2-0.3 tph throughput (flake production) are commercially available.

Question
Dr. Pietsch indicated that commercially available small plants have capacities as low as 0.2 tph flake. Mr. Hervieu indicated a range of 10-100 tph. Why this difference?

Answer (P. Hervieu, Sahut-Conreur)
A commercial fertilizer granulation plant is rarely below 5-10 tph product capacity. Technically speaking, compactors can be designed for capacities as low as 0.1-0.2 tph (laboratory scale). It is important to note that the term "commercial scale" has many meanings. With a high value lawn and garden-type fertilizer, a profitable commercial-scale operation may be in the 5-tph range while 20-40 tph (product) may be required for a normal (lower value) agricultural fertilizer.

Question
Other than the need for avoiding further drying, what is the moisture limit in the feed to compactor?

Answer (C. Fayard, TECHNIFERT)
There is no simple answer. It depends on the thixotropic properties of the raw material. For superphosphate-type products the maximum is 5%-7% water.

Answer (W. Pietsch, Koppern)
A maximum of 5% moisture is usually acceptable depending on the material composition and product porosity. The product must be able to "hold" the moisture. The allowable level of moisture is heavily influenced by the raw materials that are used.

Question
Can a material such as ground pine tree bark or peat be compacted? Does the associated moisture content of these materials present problems with compaction?

Answer (W. Pietsch, Koppern)
Yes, these materials can be compacted in small quantities (less or equal to 20% of the total formulation). Moisture does present problems; however, the larger problem is the elasticity of some of these materials.

Answer (C. Fayard, TECHNIFERT)
Binders can be used with these materials to obtain two results: (a) increase the hardness and at the same time increase the yield, and (b) decrease the free moisture to improve the storage properties.

Question
Can powdered or pulverized limestone/dolomite be compacted?

Answer (P. Hervieu, Sahut-Conreur)
We have industrial experience in compacting and briquetting limestone/dolomite at relatively high pressures and without binders.

Answer (W. Pietsch, Koppern)
Yes, it is possible to compact these materials.

Question
Can potassium nitrate be compacted with other NPK materials?

Answer (C. Fayard, TECHNIFERT)
We do not have any industrial-scale experience with the compaction of potassium nitrate. However, it is necessary to be cautious if the percentage of potassium nitrate content of the formula is higher than 5%-10%. Also, please refer to my previous comment on ammonium nitrate regarding safety precautions.

Answer (F. A. Dalton, FERQUIGUA)
Potassium nitrate may be compacted with other materials as well as by itself.

Answer (W. Pietsch, Koppern)
It is possible to compact potassium nitrate with other materials.

Question
What is the effect of combining acidic materials such as ammonium sulfate or residual phosphoric acid with calcium- and magnesium-containing materials?

Answer (C. Fayard, TECHNIFERT)
One of the main advantages of compaction is that it enables the incorporation of acidic and basic components

in the same formula. However, it is necessary to calculate a formula with a pH less than 6.5 when ammonium salts are used.

Question
What is the experience in manufacturing slow-release fertilizers by use of compaction? To what extent, for example, do granule density and certain components (raw materials) resist dissolution of the nutrients into the soil solution?

Answer (C. Fayard, TECHNIFERT)
The four methods we work with to control the nutrient release of compacted fertilizers are: (a) increasing the size of the granule, (b) decreasing the porosity of the granule, (c) coating the granule, and (d) use of a waterproofing agent on the granules. The impact of each of these factors on the nutrient release characteristics depends upon a number of factors including the raw materials, soil properties, and climactic conditions.

Question
In the case of ammonium sulfate, organic impurities adversely affect the compaction process. Has the use of binders been tried to aid in the compaction of ammonium sulfate?

Answer (W. Pietsch, Koppern)
Yes. Binders have been tested with mixed results.

Answer (C. Fayard, TECHNIFERT)
We have observed that the difficulties with compacting ammonium sulfate are due mainly to the crystal characteristics of the raw material. These characteristics are strongly influenced by the organic impurities present during ammonium sulfate crystallization.

Question
What experience do you have in the manufacture of high-analysis P_2O_5 + KCl granules which can then be bulk blended with other materials such as urea at about a 50:50 ratio to obtain 24-10-10 or similar fertilizers?

Answer (C. Fayard, TECHNIFERT)
We have experience. The key point is that the free water content of the compacted material must be very low to avoid caking especially when the compacted product is blended with urea.

Answer (F. A. Dalton, FERQUIGUA)
At FERQUIGUA, several compacted products are specifically produced for use in bulk blends. This technique is mainly used in order to incorporate a raw material which is not available in granular form, or when the premium for the granular form is very high, into bulk blends. Incorporating KCl in bulk blends in this way may not be economical since the premium for granular KCl compared with standard KCl is relatively low.

Question
How much water is used to polish/quench potash?

Answer (M. O. Klein, IFDC)
Based on Saskatchewan's potash experience the norms are 0.8%-1% water by weight with values as high as about 4.5%. Of course, one desires to take advantage of the sensible heat of the product for economic reasons and avoid an additional drying step.

Question
For compaction, is it necessary to have raw materials of uniform size or in powder form?

Answer (D. Alt, Sackett)
It is not necessary to have the materials of a uniform size for compaction. For example, a mixutre of powdered monoammonium phosphate (MAP), prilled urea, and standard-grade potash compacts nicely. The required raw material size distribution depends heavily upon the particular formulation.

Answer (W. Pietsch, Koppern)
It is best to have the raw materials in powder form and of uniform size. This can be done by crushing the feed to the compactor.

Answer (C. Fayard, TECHNIFERT)
It is better to have the raw materials in powder form.

Answer (F. A. Dalton, FERQUIGUA)
Materials both uniform in size and in powder form help in the compaction proces.

Question
How important is the particle size of raw materials in the feed to compactor, especially in the case of materials which are difficult to compact like limestone? What is the recommended size distribution?

Answer (W. Pietsch, Koppern)
The ideal particle size should be between 200 and 800 μm (about 48- to 65-mesh, Tyler).

Question
Do you have problems with scaling on the roller surfaces? How do you clean the roller surface?

Answer (C. Fayard, TECHNIFERT)
Scaling problems usually occur when the compaction pressure is too high.

Answer (F. A. Dalton, FERQUIGUA)
At FERQUIGUA, we usually clean the roller surfaces by processing hard, moderately abrasive raw materials such as phosphate rock.

Answer (W. Pietsch, Koppern)
Rolls can be cleaned either by washing or by running hard material (for example, sand) through the unit for a short time.

Question
Could you give an indication as to the cost of a 30-40 tph (product rate) compaction plant?

Answer (C. Fayard, TECHNIFERT)
About US $10 million.

Answer (D. Alt, Sackett)
Such a plant (installed cost basis) would cost between US $7 and US $10 million.

Answer (W. Pietsch, Koppern)
The cost would depend on location and the degree of process sophistication.

Question
What type of dust collection system is required for a compaction plant?

Answer (W. Pietsch, Koppern)
A minimum system would require only cyclones; an optimum system would use cyclones and wet scrubbers (bag filters should be avoided).

Answer (F. A. Dalton, FERQUIGUA)
That would depend on local emission regulations. At FERQUIGUA, all we use are dry cyclones since the plant is somewhat isolated and regulations are not strict. If we needed to comply with stricter regulations we would probably install a baghouse.

Answer (C. Fayard, TECHNIFERT)
Bag filters are preferred for dust collection.

Answer (D. Alt, Sackett)
The recommended dust collection system would consist of cyclones and a baghouse-type collector. Wet scrubbers are not recommended because disposal of scrubber liquor would be a problem.

Question
Is the use of dry cyclones adequate to collect the dust generated in the process? Is the use of wet scrubbers required?

Answer (C. Fayard, TECHNIFERT)
The use of bag filters is sufficient.

Answer (W. Pietsch, Koppern)
The type of scrubbing system required will depend heavily upon the local environmental regulations.

Answer (D. Alt, Sackett)
Cyclones are usually not sufficient to completely clean the air, thus a baghouse may be installed after the cyclone. A wet scrubber is also a very good choice for final cleaning of the air after the cyclones if there is a way to use or dispose of the effluent liquor.

Comment (J. J. Schultz, IFDC)
If bag-type collectors are used it may be better to eliminate the cyclones entirely to improve the operation of the bag collector. A wide particle-size distribution in the dust facilitates the formation of a "cake" on the collector fabric that is more porous and more easily dislodged from the bag fabric. A disadvantage of such a system is that if the bag collector plugs it cannot be bypassed for cleaning as is the case if cyclones are installed ahead of the bag collector to remove most of the dust. Of course, if bag collectors are used, especially with urea-based products, a great deal of precaution must be taken to keep the bags dry to avoid plugging not only during operation but also during periods when the plant is shut down.

Question
What is the maximum filler content in compaction/granulation? Can sand be used?

Answer (C. Fayard, TECHNIFERT)
It is better not to use fillers because of the cost involved. Sand should not be used as it accelerates wear of the roller surface. Also, gypsum should not be used with urea-containing formulas due to unwanted reactions between gypsum and urea.

Answer (F. A. Dalton, FERQUIGUA)
The maximum filler content depends on the filler itself as well as on the other components of the formula. The filler content may be as high as 60%. Sand should not be used since it wears the roller surface rapidly.

Answer (W. Pietsch, Koppern)
The filler content may be as high as 30%-40% of the formula. Sand causes high wear and therefore should not be used. Gypsum and limestone are often used with good results.

Question
Is dehumidification of the compaction plant building needed?

Answer (C. Fayard, TECHNIFERT)
Dehumidification is needed for NPKs having a high urea content (low critical relative humidity) if the plant is located where the relative humidity exceeds about 50%.

Answer (F. A. Dalton, FERQUIGUA)
It depends on the humidity of the environment at the plant site. When it is high, dehumidification is recommended since it will reduce corrosion and will improve material handling.

Answer (W. Pietsch, Koppern)
Dehumidification is advisable in humid climates.

Answer (D. Alt, Sackett)
If your plant is in a high humidity location, dehumidification of the manufacturing plant area is recommended.

Question
Is it possible to use DAP instead of MAP in the compaction of NPKs?

Answer (W. Pietsch, Koppern)
Yes, this is possible and often done.

Answer (F. A. Dalton, FERQUIGUA)
Yes, it is possible.

Answer (C. Fayard, TECHNIFERT)
Yes, it is; economics should determine which material is used.

Question
What are typical downtime causes in a compaction plant and how often do they occur?

Answer (C. Fayard, TECHNIFERT)
Few downtimes occur. The availability of the plant is greater than 90%.

Answer (F. A. Dalton, FERQUIGUA)
Downtime is minimized if good maintenance is given to all the equipment. Having two compaction lines, as we do, permits production and maintenance simultaneously.

Answer (W. Pietsch, Koppern)
The downtimes consist mainly of scheduled maintenance periods for cleaning and preventative maintenance.

Answer (D. Alt, Sackett)
Downtime is most typically caused by plugging of chutes and other equipment. An annual shutdown is required for general mechanical maintenance.

Answer (J. J. Schultz, IFDC)
Compaction plants employ many of the same operations found in a wet or chemical granulation plant (raw material measuring and feeding, crushing, screening, and conveying). Therefore, the maintenance of these items is quite similar in both processes. However, because compaction avoids the need for liquid phase and drying, these equipment systems (reactors, dryers, and coolers) are not needed. Also, the compacted material is more "flowable", thus, the chutes in a compaction plant are less likely to plug. In a typical wet or chemical granulation plant it is very important to stop operation on a regular schedule (about weekly for 8 h) to clean chutes and crushers to avoid unscheduled shutdowns due to plugging. Finally, in humid regions, dehumidification of the process plant (compaction or wet/chemical granulation) will have a very significant positive impact on avoiding unscheduled shutdowns due to electrical failures, blinding of screens, and buildup on conveyor belts and idlers. Even in a well-managed wet or chemical granulation plant I think

that it would be difficult to obtain the same overall plant availability factor that an equally well-managed compaction plant could achieve.

Question
Mr. Fayard, you indicated that partially acidulated phosphate rock (PAPR) was used in your compacted formulations. Is PAPR compatible with urea?

Answer (C. Fayard, TECHNIFERT)
This depends on the quality of the partially acidulated phosphate rock. Laboratory tests are required to evaluate each case (formulation).

Answer (M. O. Klein, IFDC)
Urea reacts with the water of hydration in monocalcium phosphate, a major component in TSP and SSP. Some hydrated monocalcium phosphate is also present in PAPR. Therefore, the actual effect must be tested to determine if the particular PAPR is compatible with urea and other components of the formulation. The ratio of PAPR-to-urea is also an important factor.

Question
When producing compacted KCl, what are the effects of the surfactant agents such as oils and amines that are usually present on the surface of the potash particles?

Answer (M. O. Klein, IFDC)
Surfactants are used in the flotation process. These surfactants adversely affect the compaction process. Therefore, they are burnt off (flashed) with high temperature during the potash drying stage prior to compaction.

Answer (W. Pietsch, Koppern)
Oils and amines must be removed, usually by flashing them off during drying as completely as possible. Amines weaken the bonding strength between particles.

Answer (C. Fayard, TECHNIFERT)
Coating materials and flotation agents also have a very adverse effect on wet granulation of compound fertilizers as well as compaction. It is necessary to specify these limits to the producer when the raw materials are purchased.

Question
When shipping compacted fertilizers in bulk, (a) where does most of the degradation take place and (b) how does actual degradation relate to laboratory-scale abrasion tests?

Answer (W. Pietsch, Koppern)
Most of the degradation takes place during the loading and unloading process. The exact relationship between actual results and laboratory tests is uncertain.

Answer (F. A. Dalton, FERQUIGUA)
Degradation occurs mostly during loading and unloading operations.

Answer (C. Fayard, TECHNIFERT)
Most of the degradation which results in the formation of dust clouds takes place during loading, transportation, and unloading. The sharp edges of the granules should be destroyed in a polishing drum to avoid such degradation and dusting.

Answer (M. O. Klein, IFDC)
Most of the product breakdown occurs at transfer points. It should be of interest to the audience that studies have been made by potash producers to determine degradation from point-to-point during handling and transport and that, in some cases, solutions have been implemented to reduce product degradation.

Question
Please comment on the relative shape and abrasion resistance of granules produced from flake crushed with chain mills, hammer mills, roll crushers, and other types of crushers. Also, please comment on maintenance and processing problems of each crusher type.

Answer (W. Pietsch, Koppern)
The crusher has no significant influence on the particle shape. Particle rounding is carried out in separate steps including abrasion, wetting, drying, and coating.

Answer (F. A. Dalton, FERQUIGUA)
The type of mill does not affect granule shape. Impact mills yield a harder product but increase the fines production thus decreasing product output.

Answer (C. Fayard, TECHNIFERT)
We have developed a new crusher/granulator system to manufacture rounder products. We have also modified the flowsheet of our compaction unit. Although more maintenance intensive, the new crusher/granulator concept increases the yield of product and offers improved particle roundness as well as improved production economics.

Question
Is there a compatibility problem when using urea, TSP, and phosphate rock in the feed to the compactor in the manufacture of NPKs?

Answer (C. Fayard, TECHNIFERT)
Problems of compatibility exist. Therefore, each case must be treated separately (laboratory or pilot-plant scale) according to each formula (raw material type and mix).

Answer (F. A. Dalton, FERQUIGUA)
Mixing urea with TSP should be avoided since they are not compatible.

Answer (M. O. Klein, IFDC)
As I have indicated earlier, urea will react with the water of hydration attached to the monocalcium phosphate in the TSP or PAPR. The impact of this and other factors on the actual chemical compatibility of the mix is variable and therefore should be tested in a laboratory before beginning commercial production.

Answer (J. J. Schultz, IFDC)
Compatibility is a relative term. Even if certain material mixtures are not totally compatible, they may be sufficiently compatible if storage time is short. Market conditions (requirements) should be factored in when determining "acceptable compatibility."

Question
When kieserite is also added to a compaction formula containing urea, TSP, and phosphate rock, what problems should one expect?

Answer (C. Fayard, TECHNIFERT)
Our experience has shown that kieserite has a positive effect on the compaction properties and quality of the finished product.

Answer (F. A. Dalton, FERQUIGUA)
Mixing kieserite with urea is not recommended since they react releasing water of hydration contained in the kieserite.

Question
What are the disadvantages, if any, on the storage properties when kieserite is present in the final product? Has MgO been used instead of kieserite, and what have been the consequences?

Answer (C. Fayard, TECHNIFERT)
While kieserite improves the compaction properties of a formulation, its presence does adversely effect the storage properties of the finished product.

Answer (J. J. Schultz, IFDC)
Commercial-scale experience with mixtures of urea, phosphate rock, DAP, potash, and kieserite in wet granulation clearly shows that kieserite tends to further lower the critical relative humidity of the mix. For example, a urea-based NPK without kieserite has a CRH of about 50% at 30°C while the CRH of the kieserite-containing formula is about 40%. Storage tests also show that kieserite has an adverse effect. The most important factor is free moisture; be sure to have the moisture very low (less than 0.7%) if kieserite is present. Magnesium oxide (MgO) is often used instead of kieserite. It is important to note that in some formulations MgO will react quite rapidly with ammonium sulfate and release ammonia. If the formula is not acidic, this free ammonia will be lost.

Question
At times water is added to the feed to the compactor. Could you please indicate where is the best location for adding the water?

Answer (W. Pietsch, Koppern)
The best location is in the mixer (screw) prior to the compactor where fresh feed and recycle are mixed.

Answer (C. Fayard, TECHNIFERT)
We add water to the mixture of raw and recycled material just before the compactor.

Answer (F. A. Dalton, FERQUIGUA)
The best place for water addition is where the recycle and primary feed are mixed prior to compaction. At FERQUIGUA this is achieved in a pug mill.

Answer (D. Alt, Sackett)
If water is added to the process we recommend that it be added in the pug mill used to premix the recycle with the fresh feed immediately prior to feeding to the compactor.

Question
In a typical "wet granulation" process liquid phase is required for granule formation. Is moisture required for the compaction process or is the residual moisture, if any, sufficient in addition to the compaction pressure?

Answer (C. Fayard, TECHNIFERT)
There are different binding mechanisms based on the crystallization properties of the product. For example, free water in the granule plays a significant role in the compaction of products such as ground phosphate rock. Water also helps to facilitate salt bridges between particles of the various raw materials.

Answer (W. Pietsch, Koppern)
If water is present in small amounts, dissolution and recrystallization takes place during drying. This forms interparticle bridges. This often occurs naturally due to the conversion of mechanical energy to heat during compaction.

Question
Please comment on the use of gravity feeders compared with force feeders in terms of advantages?

Answer (W. Pietsch, Koppern)
Gravity feeders are used in large roller diameter compactors with materials having good flowability and containing a limited amount of fines (minimum deaeration required). In this situation less equipment-related problems are likely to occur along with less maintenance and feed rate control problems. Gravity feeders are not recommended when the feed material is very fine and the amount of entrapped air is high.

Answer (P. Hervieu, Sahut-Conreur)
Gravity feeders can be used on raw materials with good flowability and densities between 0.8 and 1 g/cm^3. They are used most often to compact potassium and sodium chloride. However, the use of well-designed force feeders enables a better control of the feed rate to the compactor rolls.

Question
What are the best screening methods to use when searching for effective binders for compaction? Is there a scientific approach as opposed to the trial and error approach?

Answer (W. Pietsch, Koppern)
The trial and error method is the only possibility left once the preselection process has been carried out based on availability, price, and chemical acceptability (compatibility).

Question
We have found that traditional tests developed to ascertain properties of granules are not always reproducible. For example, the crushing strength depends on the shape of the granule and the abrasion test using a drum and steel balls is not always reliable. What methods do IFDC and other companies use?

Answer (C. Fayard, TECHNIFERT)
A curing time of 2 days is sometimes necessary to improve the quality of the product. A uniform curing time before testing often improves the reproducibility of test results.

Answer (W. Pietsch, Koppern)
Our company uses Kali und Salz AG physical properties tests as a reference.

Answer (M. O. Klein, IFDC)
Physical properties tests used by IFDC are outlined in a special publication which is available for a small fee (IFDC Reference Manual IFDC R6). Most of these tests are standard tests which have been improved (adapted) over the years. As for potash, the abrasion test, although relative, is satisfactorily reproducible as long as some test factors are maintained. For example, the age of the sample is very important when testing fresh products.

Question
In a normal granulation process the product is cooled before transporting it to storage. Is this practice necessary for compacted urea-based NPK products? Could these products be bagged directly from the process?

Answer (W. Pietsch, Koppern)
There is no need for cooling. However, one should not bag freshly produced urea-based NPKs; they should be allowed to cure for several hours.

Answer (C. Fayard, TECHNIFERT)
A curing time of 2 days before bagging is sometimes necessary for urea-based NPKs.

Answer (J. J. Schultz, IFDC)
The concept of "curing" before bagging is always a good idea regardless of the process. A 1- or 2-day curing period, even if no cooling occurs, helps to allow the material to reach some level of equilibrium. Slight caking due to recrystallization is destroyed upon reclaiming thus decreasing the likelihood of severe caking in the bag. The more soluble the fertilizer mixture, the more important is the need for a prebagging curing step. Of course, the relative humidity conditions of the curing area should be maintained below the critical relative humidity of the fertilizer.

Delegates and Invited Speakers

AUSTRIA

Dr. Johannes Hummel
Process Department (R&D)
Voest Alpine Industrieanlagenbau
P.O. Box 9
A-4031 Linz
AUSTRIA

CANADA

Mr. William Smith
President
International Fertilizer Systems Ltd.
8240B - 31st Street S.E.
Calgary, Alberta
CANADA T2C 1J1

CHILE

Mr. Mario Garri Johnson
Production Manager
Compania Sud Americana
de Fosfatos S.A.
P.O. Box 45
Penco
CHILE

COLOMBIA

Mr. Luis R. Gulfo Caballero
Head–Fertilizer Technical Group
Monomeros Colombo Venezolanos, S.A.
P.O. Box 3205
Barranquilla
COLOMBIA

COSTA RICA

Eng. Luis A. Rojas Montealegre
Production Engineer
Fertilizantes de Centro America S.A.
Apdo. 316
Puntarenas 5400
COSTA RICA

COSTA RICA

Eng. Miguel Saurez Fernandez
Technical Services Superintendent
Fertilizantes de Centro America S.A.
Apdo. 316
Puntarenas
COSTA RICA

EGYPT

Mr. Taher Mahmood Salama Mehana
Electricity Head Sector
El Nasr Company for Fertilizers and
Chemical Industries (SEMADCO)
Talkha
EGYPT

Mr. Adel Mahrous Mahmoud
Manager, Mechanical Workshops
The Financial Industrial Company
Kafr El Zayat
EGYPT

Mr. Youssef Mohamed Youssef Ismail
Chief, Sulphuric Acid Plant
Abu Zaabal Fertilizer and Chemical
Company
17, Kasr El Nil Street
Abu Zaabal
EGYPT

Mr. Magdy Moharram Abou Gabal
Manager, Fertilizer Production
Administration
The Financial Industrial Company
Assuit, Mankabad
EGYPT

FINLAND

Mr. Taisto Koivumaki
Development Manager
Kemira Oy
Espoo Research Center
P.O. Box 44
SF-02271 Espoo
FINLAND

(S) Denotes invited speaker or panel member.

FRANCE

Mr. C. Fayard (S)
President
Technifert S.A.
BP 61
35406 Saint Malo Cedex
FRANCE

Mr. Pascal Hervieu (S)
Sales Manager
Sahut-Conreur and Company
700, Rue Corbeau
B.P. 49
59590 Raismes
FRANCE

GUATEMALA

Mr. Frank A. Dalton (S)
Operations Manager
DISAGRO/FERQUIGUA
Anillo Periferico 17-36, Zona 11
01011, Guatemala City
GUATEMALA

INDIA

Mr. S. K. Chatterjee (S)
Vice President-Technical
Zuari Agro Chemicals Ltd.
Jaikisaan Bhawan, Zuarinagar
Goa-403.726
INDIA

Mr. K. K. Kaul
Manager–Fertilizer Technical Services
Shriram Fertilisers and Chemicals
Shriramnagar
Kota - 324 004
INDIA

Mr. S. Ramadurai (S)
Manager–Technical
Coromandel Fertilisers Ltd.
1-2-10 Sardar Patel Road
Secunderabad 500 003
INDIA

INDIA

Mr. T. A. Sankaran (S)
Plant Manager
FACT
Cochin Division
Ambalamedu 682 303
Cochin
INDIA

INDONESIA

Mr. Eric F. Djohan
Corporate Advisor
P.T. Rolimex Corporation
Jl. Ir. H. Juanda 3/31 P-Q
Jakarta
INDONESIA

Mr. Rachmanto Handani
Production Planning Staff
P.T. Pupuk Sriwidjaja
P.O. Box 084
Palembang
INDONESIA

Mr. Yohanes Hascaryo
Superintendent--Ammonia Plant
Petrokimia Gresik
Jl. Jend. A. Yani
P.O. Box 2
Gresik, East Java
INDONESIA

Mr. Yusuf Kodradi
Process Engineer Superintendent
PT. Petrokimia Gresik
Jl. Jend. A. Yani
P.O. Box 2
Gresik, East Java
INDONESIA

Mr. Patria Sugeng K.
Process Design
P.T. Pupuk Sriwidjaja
P.O. Box 084
Palembang
INDONESIA

(S) Denotes invited speaker or panel member.

ITALY

Dr. Angelo Corchia
Inorganics Process Department
Snamprogetti
3° Palazzo Uffici 1 No 2B
20097 San Donato
Milano
ITALY

JORDAN

Mr. Jamal Amira
Assistant Technical Manager
The Arab Potash Company Ltd.
P.O. Box 1470
Amman
JORDAN

MALAYSIA

Mr. Koh Ting Tiew
Works Manager
Chemical Company of Malaysia Berhad
Shah Alam Works
P.O. Box 95
41908 Klang
Selangor Darul Ehsan
MALAYSIA

Mohd Salleh Bin Darus (S)
General Manager
FPM Sdn Bhd
Lot 115, Johor Port Authority Area
P.O. Box 29
81707 Pasir Gudang, Johor
MALAYSIA

Mr. Yeo Chin Kiang
Production Engineer
FPM Sdn Bhd
Lot 115, Johor Port Authority Area
P.O. Box 29
81707 Pasir Gudang, Johor
MALAYSIA

MEXICO

Mr. Enrique M. Galvan
Manager
Gro-Green Campbell de Mexico, Inc.
Melchor Ocampo 193-1206
Mexico, D.F. 11300
MEXICO

(S) Denotes invited speaker or panel member.

MEXICO

Mr. Manuel P. Marenco
Production Manager
Gro-Green Campbell de Mexico, Inc.
Melchor Ocampo 193
Mexico, D.F. 11300
MEXICO

NIGERIA

Mr. N. B. Ajala
Technical Services Manager
NAFCON
PMB 5180
Port Harcourt
Rivers State
NIGERIA

Mr. T. Ramaswami (S)
NPK Plant Superintendent
NAFCON
PMB 5180
Port Harcourt
Rivers State
NIGERIA

TURKEY

Mr. Hasan Aslan
General Manager
Turkish Fertilizer Company
Elazig Isletmesi Muessesesi Mudurlugu
23900 Sivrice/Elazig
TURKEY

Mr. Ekrem Yilmaz
Assistant General Director
Samsun Gubre Sanayii A.S.
Genel Mudurlugu
Samsun
TURKEY

UNITED STATES

Mr. Daniel M. Alt (S)
Vice President, Engineering
The A. J. Sackett and Sons Company
1701 South Highland Avenue
Baltimore, Maryland 21224

Mr. Fred Carney
Manager, Process Development
Pursell Industries
201 West Fourth Street
P.O. Box 540
Sylacauga, Alabama 35150

UNITED STATES

Mr. B. W. Curtis (S)
Research Chemist
Tennessee Valley Authority
Muscle Shoals, Alabama 35660

Mr. John Detrick (S)
Manager, Technology-Market
Development
Pursell Industries
201 West Fourth Street
P.O. Box 540
Sylacauga, Alabama 35150

Mr. Mahesh Gandhi
Process Engineer
M. W. Kellogg Company
Three Greenway Plaza
Houston, Texas 77478

Dr. Larry L. Hammond
Manager, Rock Phosphate Marketing
and Agronomic Programs
Texasgulf Chemicals Company
P.O. Box 30321
Raleigh, North Carolina 27622-0321

Mr. L. D. Hoffman (S)
Manager, Sales
FEECO International
3913 Algoma Road
Green Bay, Wisconsin 54311

Dr. Richard Mayer
Supervisor, R&D
Allied-Signal Corporation
P.O. Box 31
Petersburg, Virginia 23804

Mr. M. M. Norton (S)
Senior Scientist
Tennessee Valley Authority
Muscle Shoals, Alabama 35660

UNITED STATES

Mr. B. R. Parker (S)
Chemical Engineer
Tennessee Valley Authority
Muscle Shoals, Alabama 35660

Mr. Robert (Bob) Parker
Plant Superintendent (SCU)
Pursell Industries
201 West Fourth Street
P.O. Box 540
Sylacauga, Alabama 35150

Mr. Gary L. Pepper
Senior Project Engineer
Davy McKee Corporation
Suite 700
2925 Briarpark
Houston, Texas 77042

Dr. Wolfgang Pietsch (S)
President
Koppern Equipment, Inc.
5215 Chinley Court
Charlotte, North Carolina 28226

Mr. James G. Sawyer
Manager, Technical
Allied-Signal Corporation
P.O. Box 31
Petersburg, Virginia 23804

Mr. G. H. Wesenberg (S)
Vice President, Process Engineering
FEECO International
3913 Algoma Road
Green Bay, Wisconsin 54311

(S) Denotes invited speaker or panel member.

Appendix

Production of Granular NPKs in Ammonium Phosphate Plants –
Some Important Differences

International Fertilizer Development Center
Technical Bulletin T-36
December 1989

180

Production of Granular NPKs in Ammonium Phosphate Plants

Some Important Differences

by James J. Schultz

International Fertilizer Development Center

-181

Preface

The plant design and operating parameters required for producing agglomerated compound (NPK) fertilizers, especially urea-based and other temperature-sensitive and hygroscopic granular products, are often quite different from those required for the production of conventional ammonium phosphate fertilizers, i.e., diammonium phosphate (DAP) or monoammonium phosphate (MAP). These differences should be carefully considered when adapting a DAP/MAP plant for the production of NPKs. The plant design and operating criteria described in this bulletin are intended to serve as a "check list" that may be used to help guide those involved in the planning and design of new NPK projects or the modification of existing units.

The data and recommendations contained in this bulletin are the distillation of a broad international base of experiences and results collected and formulated over a number of years. The author is grateful for the valuable insight offered by the many production, engineering, and research/development organizations and individuals who candidly shared their experiences and knowledge, offered suggestions, and otherwise stimulated and supported the preparation of this publication.

Library of Congress Cataloging-in-Publication Data

Schultz, James J., 1936-
Production of granular NPKs in ammonium phosphate plants—some important differences.

(Technical bulletin / International Fertilizer Development Center ; T-36)
Includes bibliographical references.
1. Nitrogen fertilizers. I. Title.
II. Series: Technical bulletin (International Fertilizer Development Center) ; T-36.
TP9634.N5S38 1989 668'.624 89-26790
ISBN 0-88090-084-9

International Fertilizer Development Center
P.O. Box 2040
Muscle Shoals, Alabama 35662

Phone No. 205-381-6600
TWX-810-731-3970 IFDEC MCHL
Telefax: (205)381-7408

Edited by E. N. Roth
Typesetting and Layout by P. F. Sandlin
Cover Design by F. Rudolph
Graphics by T. L. McGee

IFDC publications are listed in *Publications of the International Fertilizer Development Center,* General Publication IFDC—G-1, which is available free of charge.

-132

Table of Contents

Introduction 1
Importance of Granule Formation Mechanism 1
  Agglomeration-Type Processes 1
  Accretion-Type Processes 1
Equipment and Operating Parameters Unique to Agglomerated NPKs 2
  Raw Material Particle Size 3
  Liquid Phase 3
  Estimating Liquid Phase Values 4
  Heat of Chemical Reaction 4
  Insoluble Binders 5
  Liquid Phase Control 5
  Acid/Ammonia Neutralization Methods 5
  Preparing the Production Formulation 7
  Dry Raw Material Feed System 8
  Solids Recycle 10
  Granulator 10
  Cocurrent Dryer 10
  Countercurrent Process Cooler (Second-Stage Dryer) 12
  Screens 14
  Oversize Crushers 15
  Product Cooler 15
  Conditioning 16
  Storage and Bagging 16
  Process Plant Dehumidification 16
Recommendations Specific to the Production of NPKs Containing Urea 16
Verification of Recommended Plant Design and Operating Parameters 17
Conclusion 17
Appendix—Design and Operating Criteria for Urea-Based NPK Granulation Plants 18
Bibliography 20

18

Introduction

Conventional ammonium phosphate granulation plants (DAP and MAP) equipped with atmospheric or pressure tank-type preneutralizers are often not ideally suited for the production of granular NPK fertilizers, especially those NPKs that contain relatively large amounts of urea or other very soluble, hygroscopic, and temperature-sensitive salt mixtures. As a result, many combination DAP/NPK plants, although well suited for producing DAP or MAP, often have difficulty in achieving the owner's expectations when producing NPKs. This bulletin describes the fundamental differences between the granulation of DAP/MAP and that of most NPKs and discusses the plant design features most often needed for routine production of high-quality NPKs. In general, it is less difficult to produce DAP or MAP in a plant designed to produce NPKs than to do the opposite, provided, of course, that the NPK plant is equipped with systems for neutralizing large quantities of phosphoric acid and recovering ammonia.

The NPK fertilizer granulation plant design and operating parameters discussed in this bulletin are intended to describe, in general terms, the mechanical and process conditions that should be met to achieve an optimum level of plant performance and NPK product quality. None of the indicated criteria are absolute; there may often be much latitude for modification/variation, depending upon the specific requirements with respect to (1) product formulations (grades and ratios); (2) raw material quality and related physical and chemical properties; (3) skill of the plant operators; (4) expected operating rate (capacity utilization); (5) expected product quality and related regulatory criteria; (6) method of packaging, storage, and use; (7) length of storage between production and use; and (8) a host of site-specific, and often variable, factors including climatic conditions, infrastructure, environmental impact criteria, cultural practices, and market requirements.

An examination of selected papers indicated in the bibliography together with numerous other literature sources cited in these papers will provide a useful complement to this bulletin.

Importance of Granule Formation Mechanism

The method of granule formation has a pronounced impact on the design and layout of the process equipment. Therefore, a good knowledge of the primary mechanism of granule formation, growth, and consolidation is essential in determining the design features of the plant. Although a more comprehensive description of the mechanisms of granule formation can be found in the literature, the following is a brief description of the two major granule formation mechanisms, excluding drop formation (prilling), encountered in most fertilizer granulation processes.

Agglomeration-Type Processes

With most granular NPK products (excluding the slurry-based nitrophosphate-type processes), agglomeration is the principal mechanism responsible for initial granule formation and subsequent growth (Figure 1). In most NPK formulations, 50%-75% of the raw materials are fed as "dry" solids. These solid particles are assembled and joined into agglomerates (granules) by a combination of mechanical interlocking and cementing—much as a stonemason fashions a stone wall by using stones of varying size and shape and mortar as the cementing agent. The cementing medium for fertilizer granules is derived from salt solutions, for example, a preneutralized ammonium phosphate slurry and/or the dissolution of salt on the surface of the soluble solid particles. The size, shape, surface texture, strength, and solubility of the solid particles vary widely (Figure 2) and have a major influence on the granulation characteristics of the mixture.

Accretion-Type Processes

The slurry-type granulation processes (DAP, MAP, TSP, and some nitrophosphates) are quite different from the processes used for most NPKs with respect to the mechanism of granule formation and growth. As a result, the required process parameters for optimum operation of these slurry-type plants are also often quite different. With a slurry-type granulation process, a relatively thin film of moist slurry is repeatedly applied, dried, and hardened to a relatively firm substrate consisting of granules that are often product size and/or nearly product size. Granule growth is primarily by accretion, the process in which layer upon layer of new material is applied to a particle, giving the final granule an "onion-skin" structure (Figure 1). In the process, of course, some agglomeration also occurs, but this is not the predominant mechanism.

The recycle-to-product ratio required for accretion-type granule development is normally higher than that required for agglomeration-type processes. Accordingly, for a given production rate, the material handling capacity of the equipment must be larger for accretion-type granulation plants than for most agglomeration-type plants. However, because of particular temperature-related processing requirements for some agglomerated NPKs, certain equipment,

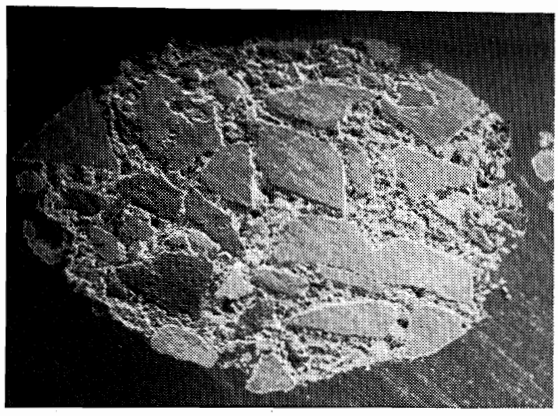

Photo of Actual
Fertilizer Granule (Agglomeration)

Scale: 1 mm

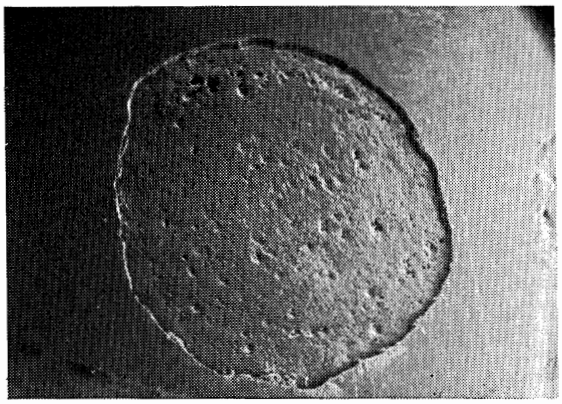

Photo of Actual
Fertilizer Granule (Accretion)

Scale: 1 mm

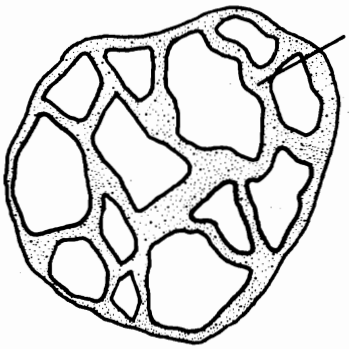

Granule Formed by
Agglomeration

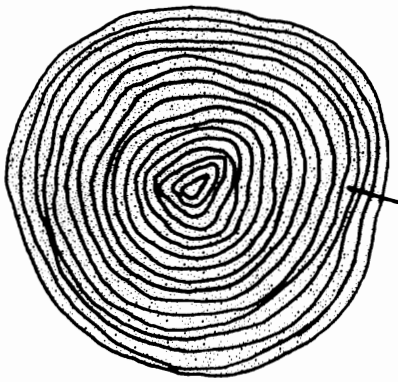

Granule Formed by
Accretion

Figure 1. Principal Mechanisms for Granule Formation.

especially the dryer and cooler, may actually be larger in some agglomeration-type plants to achieve the same production rate as in the accretion-type processes. This is discussed in greater detail later.

Granules formed by accretion are almost always harder, more spherical, and more durable than those formed by agglomeration. For example, a typical well-formed DAP or TSP granule produced mainly by accretion-type granulation may have a crushing strength of about 4-5 kg, whereas the crushing strength of an agglomerated granule may not only be less (often less than 3 kg) but also more variable depending upon its raw material composition and a number of specific factors related to granule formation. Some examples of the variability in granule strength for a number of fertilizers are shown in Table 1.

Equipment and Operating Parameters Unique to Agglomerated NPKs

A discussion of the key plant design and processing parameters required for the production of agglomerated NPK products follows. Specific reference is made to the special features needed for the production of most urea-based NPKs and other NPKs that exhibit similar high solubility, temperature sensitivity, and critical relative humidity (CRH) characteristics.[1] The major deviations from the recommended equipment and operating criteria normally found in conventional DAP/MAP plants are discussed.

1. Critical relative humidity is the ambient relative humidity below which a material loses moisture to the atmosphere and above which the material absorbs moisture from the atmosphere. The CRH of a material varies with temperature.

185

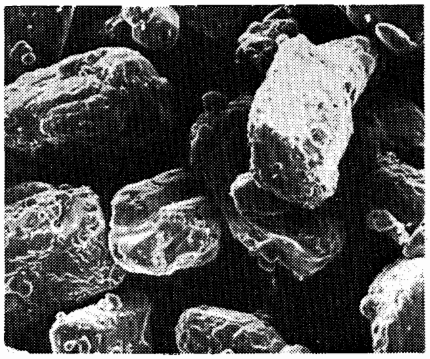

AMMONIUM SULFATE
(Standard-Grade Crystalline)

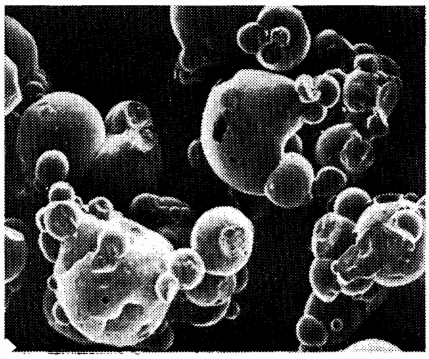

MONOAMMONIUM PHOSPHATE – MAP
(Powdered -- Spray Tower Process)

BEACH SAND

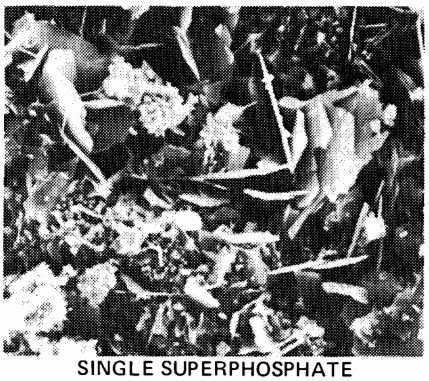

SINGLE SUPERPHOSPHATE
(Run-of-Pile)

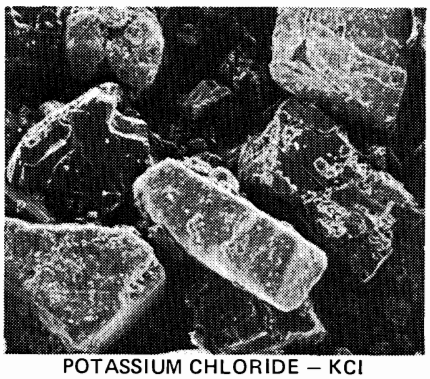

POTASSIUM CHLORIDE – KCl
(Standard-Grade Crystalline)

Magnification Approximately 15X.

Figure 2. Surface Texture of Materials Commonly Used in NPK Granulation Formulas.

Table 1. Typical Granule Strength Data for Various Granular Fertilizers[a]

Granular Fertilizer	Principal Method of Granule Formation	Typical Crushing Strength (kg/granule)
Diammonium phosphate (DAP)	Accretion	3.4-4.9
Triple superphosphate (TSP)	Accretion	4.6-8.1
10-30-10[b]	Accretion	5.0-5.5
10-20-20[b]	Accretion	4.8-5.2
Triple superphosphate (TSP)	Agglomeration of run-of-pile TSP	2.4-2.9
Single superphosphate (SSP)	Agglomeration of run-of-pile SSP	2.0-3.2
15-15-15	Agglomeration	1.5-2.9
17-17-17	Agglomeration	2.0-3.0
14-6-21-4 MgO	Agglomeration	2.0-4.0
12-19-9	Agglomeration	2.5-3.0

a. Typical values for commercial materials tested by IFDC according to IFDC Test Method S-115 (2.36- to 2.80-mm granule size). These values are shown as examples only; crushing strength can vary considerably depending upon moisture content, degree of aging, granule shape, porosity, composition, and other specific factors.
b. Produced using slurry (accretion) process; could also be produced by agglomeration.

Raw Material Particle Size

Because much of the initial (in-process) and final mechanical strength of the agglomerated NPK granule is obtained by the mechanical interlocking or fitting of the individual particles, the particle size and size distribution of the solid raw materials are very important. If the final product is in the size range of 2-5 mm, then the raw materials should be quite widely distributed within a range of about 0.2-3 mm. An example of the particle size distribution of solid materials frequently used in agglomeration-type NPK granulation plants is shown in Table 2. The topic of particle size will be discussed in more detail later.

Liquid Phase

Although mechanical interlocking of the particles within the granule structure must be optimized through selection and/or processing (crushing) of the raw materials (and sometimes recycle), a strong cementing action is also needed to permanently bond the particles into agglomerates (granules). The liquid phase for cementing is derived from (1) soluble-salt solutions

Table 2. Typical Particle Size Data for Commercially Available Materials Frequently Used to Produce Granular NPKs

Material	Percent Retained on Indicated Mesh[a]					
	4 (4.75)	8 (2.36)	16 (1.00)	28 (0.60)	48 (0.30)	100 (0.15)
Ammonium sulfate (crystalline)	0	0	1	7	75	98
Diammonium phosphate[b] (granular)	0	22	98	100	100	100
Monoammonium phosphate (nongranular)	0	1	7	30	65	90
Potassium chloride (standard)	0	0	6	55	90	99
Potassium chloride (special standard)	0	0	0	5	35	90
Potassium sulfate (standard)	0	0	15	75	95	100
Single superphosphate (run-of-pile)	3	11	25	36	52	76
Triple superphosphate (run-of-pile)	7	14	19	26	51	80
Urea (prilled)[b]	0	15	92	95	100	100

a. Tyler mesh, opening size in mm indicated in parentheses.
b. Crushing of these materials is preferred to obtain a more uniform (homogeneous) NPK product.

added to the granulator, for example, an ammonium phosphate slurry and/or solutions of urea or ammonium nitrate, and (2) dissolution of a small portion of material on the surface of the soluble raw material and recycle particles. This dissolution is caused by the combination of heat and water contained in the above solutions or by steam or water injected into the granulator. Solubility data for some of the more common fertilizer salts are given in Table 3. Liquid phase control is the key to achieving the desired level of granulation efficiency and product quality. Ideally, after drying, the liquid phase (salt solution) forms strong crystal bonds (salt bridges) between the particles of the agglomerate that are mechanically well-fitted and interlocked—again, the concept of a stone wall.

Estimating Liquid Phase Values

Experience has shown that there are considerable differences in the amounts of liquid phase generated by the various materials normally used in the production of agglomerated NPKs. Several years ago (during the 1960s), the Tennessee Valley Authority (TVA) examined a wide variety of NPK production formulations that were known to perform well and devised a numerical value to express empirically the "apparent" liquid phase contribution that could be expected from a number of materials commonly used to produce NPKs. These "liquid phase factors" are shown in Table 4. Experience has shown that, when these values are used as a guide, a liquid phase of about

Table 3. Solubility of Common Fertilizer Salts in Water[a]

Fertilizer Salt	Approximate Concentration of Saturated Solution at Indicated Temperature		
	0°C	20°C	100°C
	(%)		
Ammonium nitrate	54	66	90
Ammonium sulfate	41	43	51
Diammonium phosphate	30	41	58
Monoammonium phosphate	18	27	63
Potassium chloride	22	25	36
Potassium nitrate	12	24	71
Potassium sulfate	6	10	19
Urea	41	52	88

a. Values indicated are for pure salts.

300 kg/tonne of product is about optimal for most agglomeration-type NPK formulations. Of course, it should be appreciated that liquid phase, while important in granule formation, is only one of the criteria that must be carefully evaluated when estimating the granulation characteristics of a particular formulation.

Table 4. Liquid Phase Factors for Selected Materials Frequently Used in NPK Granulation (Agglomeration) Formulas

Material	Liquid Phase Factor
	(kg/kg)
Anhydrous ammonia	0.50
Ammonia/ammonium nitrate solutions (various compositions)	1.00
Ammonium nitrate (prills)	0.30
Wet-process phosphoric acid	1.00
Sulfuric acid	1.00
Superphosphoric acid	1.00
Water or steam	2.00
Ammonium sulfate (crystalline)	0.10
Single superphosphate (run-of-pile)	0.10
Triple superphosphate (run-of-pile)	0.20
Potassium chloride (coarse or granular)	0.30
Potassium chloride (standard)	0.00
Diammonium phosphate (granular)	0.25
Monoammonium phosphate (nongranular)	0.20
Urea (prilled)	0.30

To obtain the total weight of the liquid phase in a formulation, multiply the weight of each raw material in the formula (kg) by the appropriate liquid phase factor. A total liquid phase weight value of about 300 kg/tonne is considered optimal in many cases

Heat of Chemical Reaction

The level of liquid phase is also closely allied with another criterion, i.e., the expected amount of heat created by various chemical reactions in a given NPK formulation. The amount of heat generated, particularly within the granulator, can have a marked effect on the amount of liquid phase formed and, therefore, the resulting granulation characteristics of the mixture. In general, to achieve optimum granulation, the calculated total liquid phase for a formulation, using

the data in Table 4, should be lowered if the formulation produces a large amount of chemical heat of reaction. However, the optimum relationship between liquid phase and heat of reaction for a specific formulation must be learned from actual operating experience.

The most important heat-generating chemical reaction in most NPK plants is the neutralization of acidic materials with ammonia. The approximate amount of heat released when ammonia reacts with some common fertilizer materials is shown in Table 5. As with liquid phase, experience has shown that if the amount of heat released in the granulator is equivalent to about 45,000-50,000 kcal/tonne of product, conditions are generally good for obtaining optimum granulation. Of course, like liquid phase, the proper level of heat is just another one of the many critical criteria that must be met to obtain optimum granulation efficiency.

Insoluble Binders

In some cases, the mechanical and crystal (salt bridge) bonding of particles can be greatly improved by adding about 5%-15% of a finely divided insoluble binder powder, for example, kaolin clay, to the granulating mixture. The binder powder helps to fill the many small voids between the particles and acts much like a saturated wick in helping to join the particles together (Figure 1). This concept works particularly well with NPKs containing large amounts of crystalline ammonium sulfate, potassium chloride, potassium sulfate, and/or kieserite (magnesium sulfate monohydrate) and relatively low levels of suitable soluble salts or solid binders such as ammonium phosphate or superphosphate. It is important to note, however, that some insoluble binders (clay, for example) have the capacity for retaining moisture thus making subsequent drying more difficult.

Liquid Phase Control

In all NPK formulations, most of the liquid phase is obtained from materials that are introduced to the process at a fixed rate to achieve a final product with the desired chemical analysis. The resulting liquid phase can, of course, be adjusted within rather specific limits through the selection of raw materials or by controlling the free water content and/or chemical composition of the slurry (for example, the NH_3:H_3PO_4 mole ratio as shown in Figure 3). However, once this is established (optimized), the flow rates of the liquids must remain constant to ensure the correct analysis of the final product. For this reason, all agglomeration-type formulations should allow for a moderate degree of liquid phase "tuning" performed by the operator using steam and/or water fed directly to the granulator. The discretionary use of a small amount of steam and/or water by the operator helps to compensate for variations in granulation efficiency caused by changes in the temperature of the materials, quantity and particle size of the recycled material, and minor (but normal) upsets within the overall processing system. This fine tuning of the process by the operator is the basis for the observation: "NPK granulation by agglomeration is more of an art than a science." The unique skill of an experienced granulator operator often greatly overrides the effectiveness of the most costly and sophisticated process design and engineering skill.

Acid/Ammonia Neutralization Methods

As indicated earlier, the acid/ammonia neutralization reactions create heat that contributes to the overall liquid phase conditions in the granulator and the efficiency of the granulation process. Thus, the method used for neutralization (reacting ammonia) can significantly influence the overall performance of the plant. A brief discussion of the most common methods used for neutralization in agglomeration-type NPK granulation plants follows.

Direct Neutralization in Granulator—This was one of the most common methods used for reacting ammonia in the many NPK granulation plants that were operated in the United States and elsewhere during the 1960s and early 1970s. Direct neutralization in the granulator is particularly well suited for NPK grades containing large amounts of superphosphate (SSP or TSP) and a relatively low level of nitrogen. With direct

Table 5. Approximate Amount of Heat Released When Ammonia Reacts With Various Materials Commonly Used to Produce Granular NPKs

Material Reacted With Ammonia	Reaction Product (solid)	Heat Released	
		NH_3 Gas	NH_3 Liquid
		(kcal/kg NH_3 reacted)	
Wet-process phosphoric acid (54% P_2O_5)	Monoammonium phosphate (MAP)	1,890	1,370
Wet-process phosphoric acid (54% P_2O_5)	Diammonium phosphate (DAP)	1,510	990
Monoammonium phosphate (MAP)	Diammonium phosphate (DAP)	1,130	610
Triple superphosphate (TSP)	Ammoniated TSP	1,580	1,060
Single superphosphate (SSP)	Ammoniated SSP	1,460	940
Sulfuric acid (100%)	Ammonium sulfate	2,165	1,645

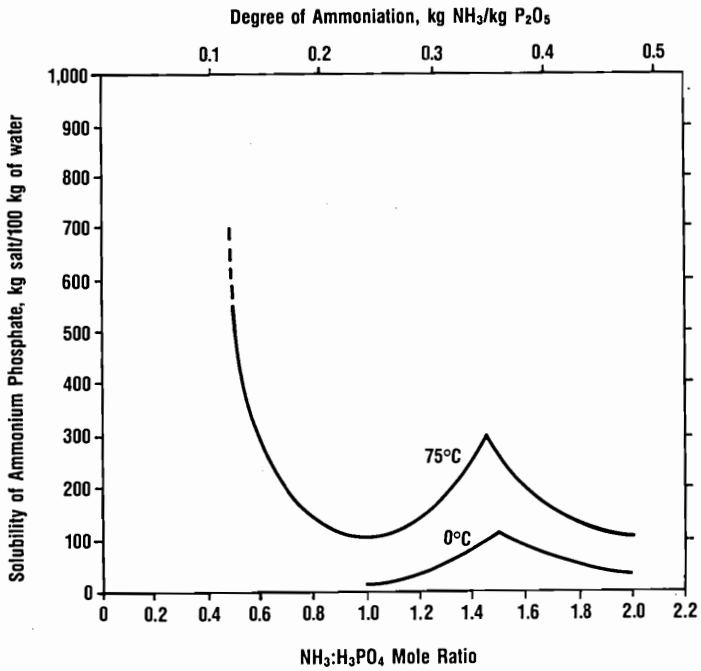

Figure 3. Effect of Mole Ratio on Solubility of Ammonium Phosphate.

neutralization, the best operation is usually obtained if the amount of ammonia reacted in the granulator does not exceed the equivalent of about 50 kg/tonne of product.

In the direct neutralization process, ammonia is distributed beneath the bed of material in the granulator. If sulfuric acid is used, it too is usually distributed beneath the bed of material while the phosphoric acid, if used, is most often sprayed or dribbled on top of the bed. When sulfuric acid is used, precautions should be taken to ensure that the acid is added at a particular location with respect to the ammonia to ensure quick and uniform neutralization and thus minimize the unwanted reaction of sulfuric acid with potassium chloride that most often is also present in the formulation. This reaction causes the formation of very corrosive hydrochloric acid, which reacts rapidly with ammonia to form a dense fume of ammonium chloride that is very difficult and costly to collect in the plant's emission control (scrubbing) system.

Tank-Type Neutralizers—The use of an atmospheric or pressurized tank-type neutralizer offers maximum flexibility in managing the acid/ammonia reactions and obtaining the critical heat/liquid phase criteria needed for good granulation when producing a wide variety of NPK grades. Because the acid/ammonia reactions are only partially completed in these tank-type neutralizers, they are often referred to as "preneutralizers." Such preneutralizers are commonly used in the majority of today's DAP plants.

When a preneutralizer is used, large amounts of acid can be partially reacted with ammonia. The degree of reaction performed in the preneutralizer is determined by a number of factors; however, the most important criteria are the production of a fluid slurry that is easy to transport (pump) to the granulator and uniformly distribute onto the rolling bed of material in the granulator. The fluidity of the preneutralized slurry is maintained through careful control of the NH_3:H_3PO_4 mole ratio, temperature, and free water content of the reacted slurry. The neutralization reactions that are only partially completed in the preneutralizer are completed in the granulator where additional ammonia is added beneath the rolling bed of material.

When sulfuric acid is reacted in combination with phosphoric acid in the preneutralizer, special precautions must be taken in the selection of construction materials that will resist the more corrosive environment caused by the sulfuric acid. Also, at the higher mole ratio and pH (for example, about 1.5 and 6.8, respectively), the presence of ammonium sulfate crystals tends to thicken the slurry and make pumping difficult; thus, operation at a lower NH_3:H_3PO_4 mole ratio and pH (about 0.4 and 2.0, respectively) is often preferred.

Pipe-Type Reactors—In the mid-1970s, TVA demonstrated the feasibility of replacing a conventional tank-type preneutralizer with a novel device referred to as a pipe reactor. This type of reactor was a radical departure from the conventional tank-type preneutralizer normally used to react large amounts of ammonia with phosphoric acid. The pipe reactor consists basically of a length of corrosion-resistant pipe (about 3-6 m long) to which phosphoric acid, ammonia, and often water are simultaneously added to one end through a piping configuration resembling a tee, thus the name "tee reactor." The acid and ammonia react quite violently, pressuring the unit and causing the superheated mixture of ammonium phosphate slurry ("melt") and water to forcefully discharge from the opposite end of the pipe that is positioned inside the granulator. Uniform distribution of the "melt" on top of the rolling bed of material in the granulator is achieved by varying the configuration and orientation of the discharge opening of the pipe. A major advantage of the pipe reactor over conventional preneutralizers is that it more effectively utilizes chemical heat of reaction to evaporate unwanted water from the relatively dilute acid.

Later, the tee reactor was modified by TVA to also accept an additional flow of sulfuric acid through another pipe inlet located opposite the phosphoric acid inlet, giving the unit a "cross" configuration and thus the name "pipe-cross reactor" (PCR).

Use of the PCR makes it possible to react a wide variety of phosphoric/sulfuric acid mixtures with ammonia. This capability is particularly useful in NPK granulation plants and allows a greater choice in the selection of

- 184

raw materials to improve granulation and optimize the overall cost of production.

In general, the mixture discharged from the PCR does not require further reaction with ammonia in the granulator. In some cases, however, the level of reaction in the PCR may be altered (decreased) to minimize the escape of ammonia or to obtain improved granulation characteristics of the "melt" when it is combined with the solids in the granulator.

Several variations of pipe-type reactors (and materials of construction) are currently used in NPK, DAP, and MAP plants, sometimes in combination with conventional tank-type preneutralizers. Perhaps one of the greatest advantages offered by the use of pipe reactor technology in the NPK industry is that it provides an opportunity to effectively use a greater variety of raw materials including, for example, larger quantities of dilute acids and scrubber liquor. This added flexibility in raw material choices can often result in more favorable production costs and at the same time provide a method for disposing of certain "problem materials" such as excess scrubber liquor. It should be noted, however, that the technology does not fit all situations equally well. Therefore, its potential should be carefully examined with regard to the particular circumstances.

Preparing the Production Formulation

According to the foregoing discussion, a large number of raw material and process variables must be considered when developing NPK production formulations. As with the operation of an NPK plant, formulation too requires a considerable amount of skill and an element of "art" to ensure that the particular formulation will yield the desired results in a given plant.

A given NPK fertilizer can be formulated in many ways depending upon the available raw materials and specific equipment system. Table 6 shows some examples of NPK production formulations that have been

Table 6. Examples of Typical Commercially Proven NPK Production Formulas in Which Agglomeration is the Principal Mechanism for Granule Formation and Growth[a]

Material as Fed to Process[c]	Direct Ammoniation in Granulator			Pipe-Cross Reactor (PCR)[b]		Tank-Type Preneutralizer (PN)[b]		Urea Solution/Steam (No Chemical Reaction)		
	3-9-18	5-20-20	13-13-13	8-24-24	13-13-13	15-15-15	17-17-17	12-12-17-1.2 Mg	14-6-21-2.4 Mg	16-0-30
	(kg/tonne finished product)[d]									
Anhydrous ammonia—82% N	37	52	-	66 (90% to PCR)	85 (100% to PCR)	127 (75%-80% to PN)	82 (65%-70% to PN)	-	-	-
Ammonia/ammonium nitrate solution—46% N	-	-	145	-	-	-	-	-	-	-
Urea (prills)—46% N	-	-	-	-	-	105	231	115	153	240
Urea solution—35% N	-	-	-	-	-	-	-	155	204	156
Ammonium sulfate (crystalline)—21% N, 24% S	-	50	205	121	300	-	-	-	-	-
Sulfuric acid—variable % H_2SO_4	63 (93% H_2SO_4)	-	64 (78% H_2SO_4)	40 (78% H_2SO_4) (100% to PCR)	192 (78% H_2SO_4) (100% to PCR)	261 (96% H_2SO_4) (100% to PN)	108 (96% H_2SO_4) (100% to PN)	-	-	-
Wet process phosphoric acid—54% P_2O_5	-	170	63	443 (90% to PCR)	250 (85% to PCR)	292[e]	330[e]	-	-	-
Single superphosphate (ROP)—18% P_2O_5, 12% S	508	332	216	-	-	-	-	-	-	-
Triple superphosphate (ROP)—46% P_2O_5	-	124	-	-	-	-	-	-	-	-
Monoammonium phosphate (powdered)—10% N, 50% P_2O_5	-	-	-	11	-	-	-	-	-	-
Diammonium phosphate (crushed granules)—18% N, 46% P_2O_5	-	-	130	-	-	-	-	87	-	-
Phosphate rock (ground)—32% P_2O_5	-	-	-	-	-	-	-	247	191	-
Potassium chloride (standard)—60% K_2O	-	342	221	402	223	255	289	276	353	500
Potassium sulfate (standard)—50% K_2O, 18% S	320	-	-	-	-	-	-	-	-	-
Sulfate of potash-magnesium (standard)—22% K_2O, 11% Mg, 22% S	110	-	-	-	-	-	-	-	-	-
Magnesium sulfate (kieserite)—16% Mg, 22% S	-	-	-	-	-	-	-	-	150	-
Magnesium oxide—50% Mg	-	-	-	-	-	-	-	25	-	-
Insoluble binder	-	-	-	-	-	-	-	110	-	130
Micronutrient mix (various nutrients as required)	10	-	-	-	30	-	-	10	-	-
Conditioning agent (coating on product)	-	-	10	-	10	15	15	15	10	15
Subtotal	1,048	1,070	1,054	1,083	1,090	1,055	1,055	1,040	1,061	1,041
Evaporation	-48	-70	-54	-83	-90	-55	-55	-40	-61	-41
Total (product basis)	1,000	1,000	1,000	1,000	1,000	1,000	1,000	1,000	1,000	1,000

a. Examples intended to partially illustrate large number of formulation possibilities depending upon specific process equipment system, available raw materials, agronomic requirements, product composition guarantees, and other local factors.
b. Flows of acid and ammonia to PCR and PN may vary; indicated flows typical for commercial practice. The addition of steam and/or water to the granulator is generally required to optimize granulation efficiency.
c. All materials are fed directly to granulator unless otherwise noted. Indicated composition is typical of industry practice.
d. Values rounded for simplicity.
e. Phosphoric acid is first fed to fume scrubbing system and then onward to PN.

BEST AVAILABLE COPY

190

successfully used in commercial practice. Because the performance of these formulations in a given plant will depend heavily upon a number of factors as described in this bulletin, these examples are offered only to illustrate the variability that should be taken into account in the planning and design of an NPK production facility.

Dry Raw Material Feed System

The chemical analysis of the finished product from granulation plants that use significant quantities of solid raw materials in the formulation depends heavily upon careful control of the solid raw material feeds to ensure that they are in the correct proportion and that their flow rate is closely matched with the flows of the fluid materials (for example, preneutralized slurry and ammonia) fed to the granulator.

Some granulation plants use individual belt-type weigh feeders to measure the continuous flow of each solid material to the process. Other plants, particularly those in the United States and Brazil, use a combination batch weighing/continuous feed (stream-out) system.

A common problem with using individual belt-type weigh feeders for each material is that it is often difficult to maintain accurate control on a continuous basis because of lumps and other variations in the flow properties of the nongranular solid materials. Belt-type weigh feeders can be particularly troublesome in NPK plants where a large number of grades are produced and/or when lumpy, damp, or finely textured raw materials are used. For example, inadequately cured superphosphate, some forms of byproduct ammonium sulfate, and some dry but finely textured materials such as potash and kieserite often cause problems because they tend to bridge in the weigh feeder surge hoppers. In many cases, mechanical vibrators that are attached to the surge hoppers and designed to overcome these problems actually increase the tendency of the material to compact and bridge.

Variability in the raw material feed characteristics may lead to erratic performance of the continuous belt-type weigh feeders and increase the need to frequently change (adjust) the feed rates on the basis of the chemical analysis of the product. Correctly adjusting the raw material feed rates on the basis of product analyses is also very difficult because of the lag time in the granulation plant system. For example, several hours are required for a change in the raw material feed rate to become fully evident in the final product (Figure 4). Unless the lag time in the plant is well known and the sampling program is carefully synchronized with this lag time, the analytical findings will be quite misleading and will thus result in a program of constantly changing the feed rates without achieving the desired goal. The lag time also varies with the raw material; for example, a change in easy-to-granulate ammonium phosphate slurry will show up in the product much quicker than a change in a difficult-to-granulate material such as sulfate of potash. Furthermore, in most NPK formulations, the recycle material has a very different chemical composition from that of the final product; thus, a considerable amount of time (often 3-6 h) is required to achieve equilibrium after making a change in the feed rate of a raw material. However, in a slurry-type process, such as DAP granulation, the neutralized feed and recycled materials are essentially the same in chemical composition and equilibrium is more quickly established.

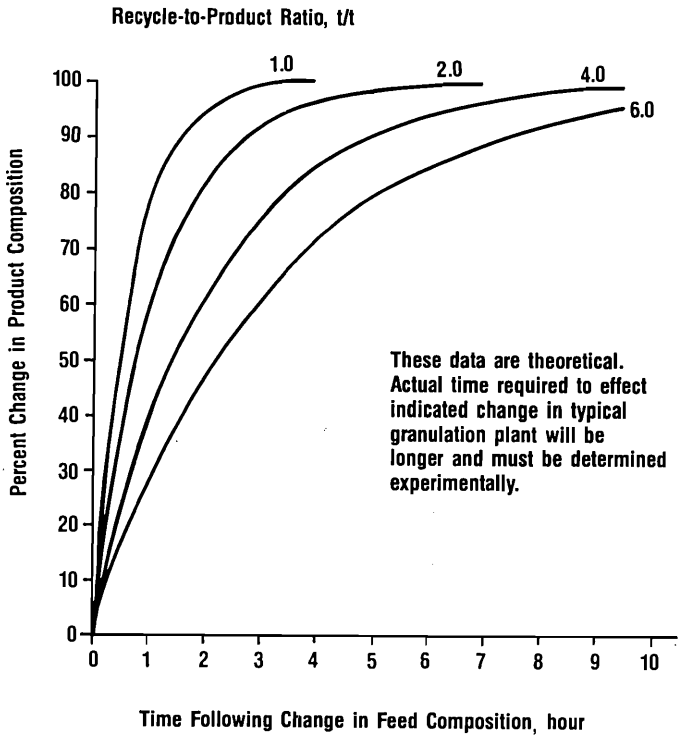

Figure 4. Relationship Between Time and Change in Product Composition in Granulation Plant at Various Recycle-to-Product Ratios.

Most of the problems with individual belt-type weigh feeders and their possible adverse effect on the chemical analysis of NPKs can be almost completely avoided by using a combination batch weighing/continuous stream-out feed system (Figure 5). The batch weighing system avoids the problem of uncertain weighing accuracy caused by lumps and other variations in the dry raw material flow characteristics. With this system, a precisely weighed batch of dry materials (usually a 2- to 4-t batch) is discharged into

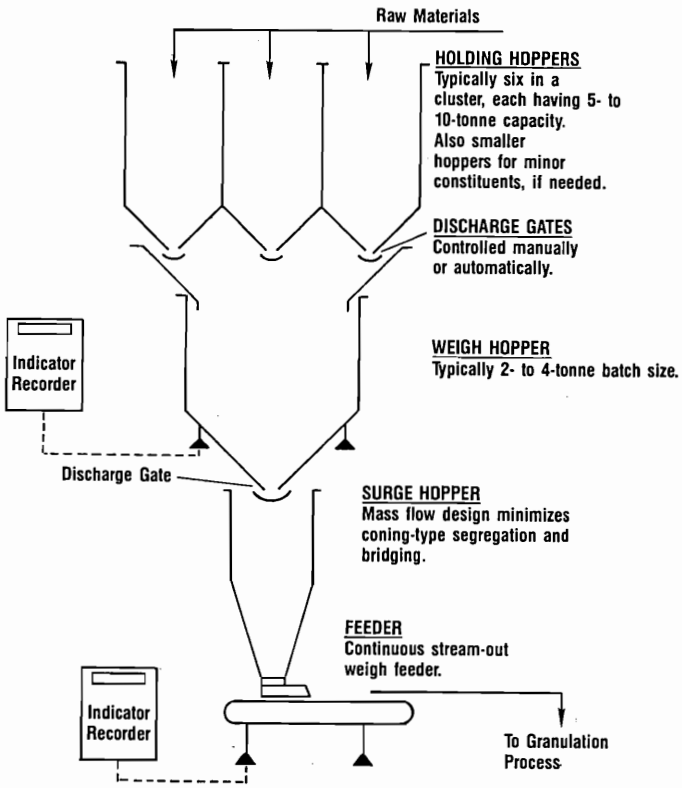

Figure 5. Batch-Type Raw Material Weighing Unit With Continuous Feed System.

a surge hopper equipped with a belt-type weigh feeder (stream-out feeder). In some plants, a variable speed screw-type conveyor is very effective, especially if the feed material is very fine and free flowing. The rate of this feeder is synchronized with the flow rate of slurry from the preneutralizer (or pipe-type reactor) and other fluids fed to the granulator. This system is quite simple, and the operator can check the accuracy of the stream-out feeder by simply using a stopwatch to check the time required to feed a batch of known weight. The operator can do this as frequently as necessary (usually about twice per work shift) to ensure accurate feeding and proper matching of the dry feed with the slurry and other fluids fed to the process.

Certain formulations may require a large number of dry raw materials, which may vary widely in both quantity and physical properties. In this case, the uniformity of the analysis of the individual granules of final product and the consistency of the granulation step can be improved by mixing the weighed batch of raw materials before it enters the hopper supplying the stream-out feeder. In this case it is also important, after mixing, to avoid subsequent segregation caused by the material "coning" in the feeder hopper. A relatively tall, slender cylindrical hopper with a long tapered conical bottom, described in the literature as a "mass flow hopper," will minimize "coning" and ensure uniformity of the material entering the stream-out feeder.

Figure 6 depicts an example of such a system in which a combination weigh-hopper/paddle-type mixer is used, followed by a mass flow-type surge hopper supplying the stream-out feeder. Ribbon-type blenders or rotary drum-type mixers can also be used. If a rotary drum-type mixer is used, a separate weigh hopper offers a more practical and reliable mechanical design. Of course, the separate weigh-hopper design also works well with any type of mixer and may be preferred because of its mechanical simplicity compared with the combination weighing/mixing units. This more elaborate and more costly version of the batch-type weighing concept (Figure 6) is usually needed only if many nutrient guarantees are required (for example, micronutrients), if the size and surface characteristics of the materials differ greatly from each other, or when a high degree of uniformity in each product granule is required. Such a system is especially helpful in obtaining uniform distribution of small quantities of insoluble binders or other materials that may be used to promote granulation.

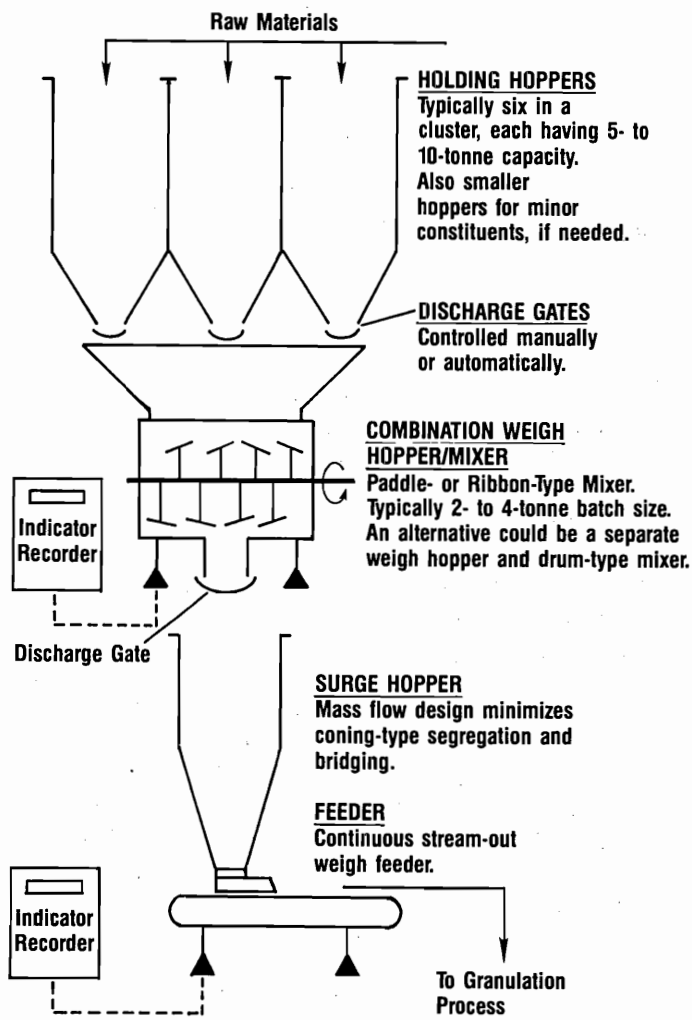

Figure 6. Batch-Type Raw Material Weighing/Mixing Unit With Continuous Feed System.

If it is not practical to modify an existing continuous belt-type weigh feeder system to the batch-type feed method, then it is important to devise some method for frequently checking the feed rates from the individual belt-type weigh feeders and using these check results as a basis for adjusting the rates. This method of feed rate adjustment is more accurate and more rapidly responsive than are adjustments made on the basis of product-sampling because it avoids the complications and uncertainties caused by system lag, difficulty in collecting representative samples, and other uncontrollable variables. In NPK plants where the agglomeration of solid materials is the principal granulation mechanism, it is extremely important to base any change in feed rate(s) on a representative product sample collected (composited) over a period of at least 4 h. Adjustments in feed rates made on the basis of frequent "grab" samples can be very misleading even if the feed rate(s), sampling technique, and analytical work are precise.

Solids Recycle

Unlike most slurry-type/accretion granulation processes, NPK processes based on agglomeration seldom recycle a significant quantity of product-size material to the granulator; only undersize material is normally recycled. The use of a recycle control system for controlling (optimizing) conditions in the granulator is one of personal choice and is often of limited value except during periods of startup or when changing grades. In most cases, a "floating" recycle system is preferred in agglomeration-type NPK plants. However, the relative merits of floating and controlled recycle are often a topic of debate among NPK and DAP plant operators.

In agglomeration-type granulation, particles will agglomerate only if they can first be attracted to each other. This attraction is then followed by interlocking and bonding. Raw material and recycle fines will often not agglomerate into product-size granules if they are too large. They will simply repel each other and accumulate, eventually overloading the system. Therefore, a facility for crushing a portion of the "large" fines is recommended if coarse-grade raw materials and/or large-size product (and therefore large-size recycle fines) are anticipated. Also, the efficient crushing of oversize material is essential to ensure that the particle size distribution, and therefore surface area, of the material recycled to the granulator is reasonably uniform. The relationship between particle size and surface area is shown in Table 7. For this reason, it is recommended that the material discharged from the crushers be recycled to the screens to ensure that only fine material is returned to the granulator. Many crushers are less than 50% efficient on a single pass; therefore, the need for recirculation of the material from the crusher back to the screens should be carefully examined. This is discussed in more detail later.

Table 7. Relationship Between Particle Size and External Surface Area

Particle Size		
Diameter (mm)	Nominal Tyler Screen Size	External Surface Area[a] (m^2/kg)
0.106	150	43.4
0.250	60	18.5
0.500	32	9.27
1.00	16	4.62
2.00	9	2.31
4.00	5	1.16
4.75	4	0.971
6.70	3	0.688
8.00	2.5	0.577
15.00	-	0.307

a. Theoretical, assuming perfect spheres having a density of 1.3 g/cm^3.

Granulator

A longer-than-normal rotary drum granulator is preferred (length-to-diameter ratio of 3 or more) for granulation by agglomeration. The longer granulator is needed to (1) provide sufficient room for the uniform distribution of slurry, acids, solutions, ammonia, and steam, (2) promote intimate mixing of the solids and fluids, and (3) provide time for initial agglomeration (granule formation) and consolidation of the granules to occur in view of the operator before the material disappears into the dryer. The "art" of granulation implies that the granulator operator should be able to see what is happening and make the often subtle adjustments needed to avoid inefficient granulation and the resulting problems caused by upsets in the recycle equilibrium (mass flow and particle size distribution). Some plants that depend heavily upon steam and recovered scrubber liquor as the source of liquid phase very effectively utilize a premixing unit (using, for example, a pugmill-type mixer) located immediately upstream from the rotary drum granulator. This added step ensures uniform distribution of the liquid phase and initiates agglomeration; thus, it affords the operator another opportunity to optimize the granulation process.

Cocurrent Dryer

General—With agglomeration-type granulation, the moisture (usually about 2%-6%) in the material fed to the dryer is distributed quite evenly throughout the granule structure; this situation is very different from that prevailing in the slurry-type processes, for example, DAP, in which a moist film covers a relatively hot

and dry particle core. In either case, a cocurrent (parallel flow) dryer is preferred because with such a flow configuration the hot inlet air first contacts the moist fertilizer and thus allows operation at a higher overall temperature difference between the drying air and the moist fertilizer while minimizing the risk of overheating and melting the fertilizer, which becomes more temperature sensitive as it dries.

With the agglomerated granules, the diffusion of moisture from the core of the granule to the outside surface and then to the drying air must be quite carefully regulated—too much heat, applied too quickly, may melt the surface of the particles and cause "case hardening" resulting in granules with a soft, moist center caused by entrapped moisture. Sometimes "melting" may lead to excessive agglomeration and/or fouling of the dryer internals. In still other cases, too rapid evaporation may cause the granule to "explode." Furthermore, if evaporation occurs before proper consolidation of the granules is achieved (promoted by the rolling and tumbling action in the dryer), the granules may be too porous and therefore quite weak.

With agglomeration, the inlet portion of the dryer should be viewed as an extension of the granulator because a considerable amount of final granule formation and consolidation occurs here. Therefore, optimal performance of most NPK dryers requires an operator who is skilled and capable of exercising considerable judgment because the performance of the dryer is greatly influenced by the grade being produced and the characteristics of the individual raw materials.

Some experienced operators prefer to omit one or two rows of lifting flights near the inlet end of the dryer to give a section of smooth shell immediately following the forward-pitched throw (spiral) flights at the dryer inlet. The length of the smooth section usually equals about one-half diameter to one full diameter of the dryer. The lifting flights that follow immediately after the smooth shell section must be designed to provide full exposure of the moist particles to the drying air, yet not be too closely spaced to cause plugging or make cleaning difficult.

Temperature and Humidity Profile—In general, agglomerated products require relatively gentle drying. The temperature profile within the dryer is dependent upon the temperature sensitivity and the CRH of the material. With urea-based or highly soluble ammonium nitrate-based NPKs, the dryer outlet temperature (product) usually should not exceed about 74°C; if kieserite is also present or the N-to-P_2O_5 ratio is high, then a temperature of about 68°C is about maximum. The relative humidity (RH) of the dryer outlet air should be at least 10-15 percentage points below that of the CRH of the material at the dryer outlet temperature. Thus, for most urea-based NPKs, the RH of the air at its outlet temperature (typically about 74°C) should not exceed about 20% because the CRH of the urea- or ammonium nitrate-based materials at this elevated temperature is usually about 30%, and sometimes even lower (Figure 7). The moisture-holding capacity of air at typical NPK drying temperature and RH conditions is shown in Figure 8. The unique RH, CRH, and temperature criteria required for drying many NPKs, especially the urea-based NPKs, translate into larger-than-usual process airflows. This results in the need for rotary dryers that are relatively large in diameter compared with those used to dry products such as DAP that are less sensitive with respect to temperature, humidity, and particle entrainment.

Air Velocity—The particle size distribution of most agglomerated NPKs entering the dryer is much wider than that of DAP. NPK granules are also relatively irregular in shape compared with well-formed DAP granules; thus, they exhibit a greater drag in the airstream. The effect of drag is clearly shown in Figure 9 where the actual entrainment of irregular potash granules is compared with theoretical values for perfect spheres. To avoid excessive entrainment of the smaller and more irregular particles (those less than about 1 mm) found in most NPK plants, it is necessary to operate the dryer at a lower air velocity than is customary for DAP dryers. This lower air velocity criterion for NPKs (about 2.0 to 2.5 m/s empty-dryer [superficial] basis, compared with about 3 to 4 m/s for DAP) often limits the drying capacity of DAP plants that are converted to the production of NPKs.

Retention Time—Because the drying process for agglomerated NPKs is mainly controlled by the rate of diffusion of moisture from the core of the particles, the point at which a longer retention time does not significantly promote further drying is more quickly reached with many NPKs (especially the very temperature-sensitive urea-based NPKs) than with DAP or other accretion-type granular products. The net result is that a long retention time in the dryer is often less important with NPKs and sometimes quite undesirable. The overriding factors are the temperature and RH profile in the unit (most importantly, the difference between the material CRH and the RH of the drying air). If the dryer is too long and the cooling effect of evaporation ceases, the product may begin to overheat and "melting" may occur near the outlet end of the dryer. This can result in a ring-like buildup of material on the inside of the dryer near the discharge end. This buildup will cause a bed of material to form in the dryer which, in turn, will cause less efficient drying, overloading of the unit, and a number of other problems, including overgranulation.

Condition of Product at Dryer Discharge—The physical condition of NPK products discharged from the dryer may vary widely depending upon the

- 194

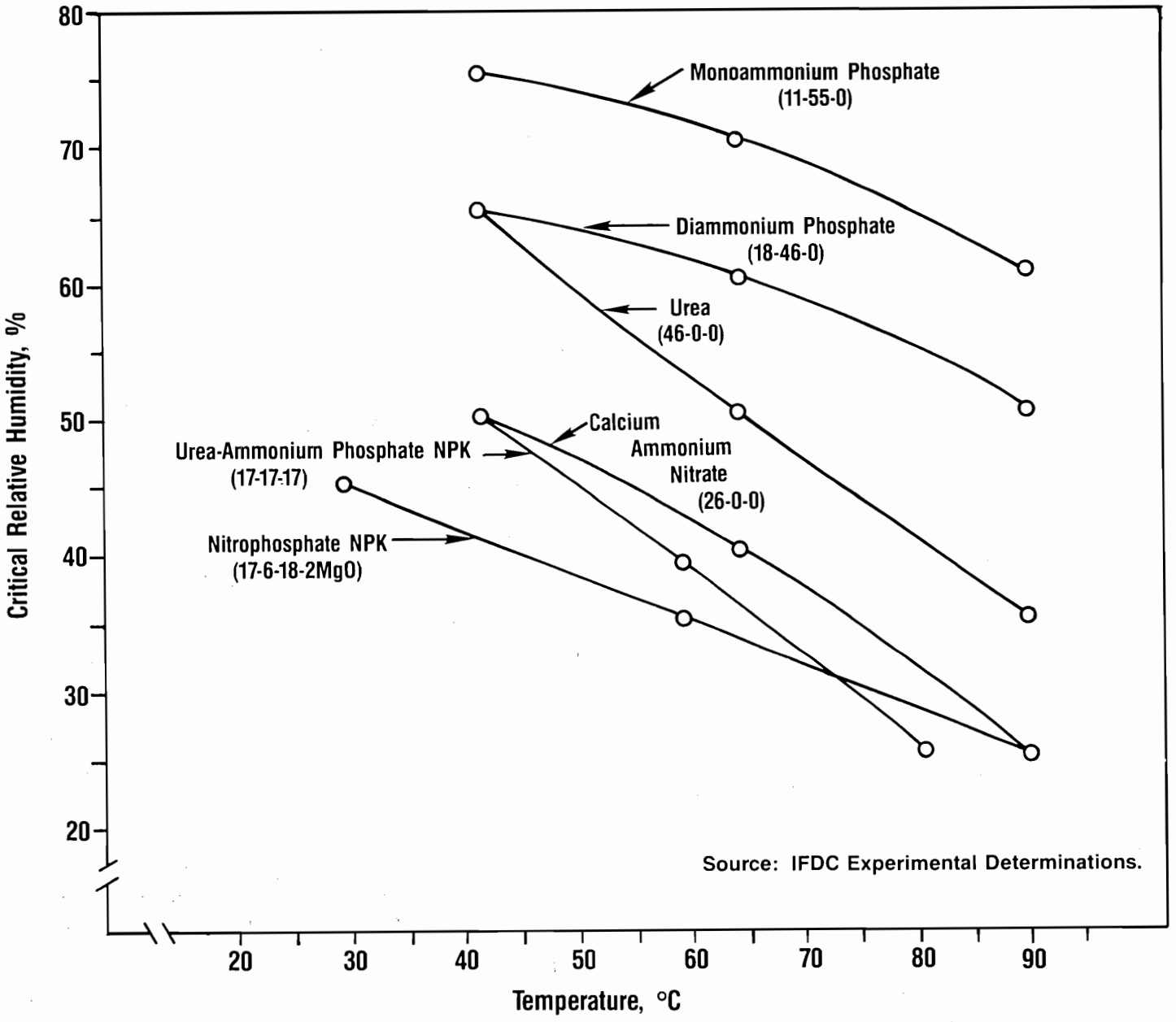

Figure 7. Effect of Temperature on Critical Relative Humidity of Selected Fertilizers.

(1) raw material characteristics, (2) formulation, (3) dryer temperature and humidity profile, (4) operator skill, and (5) the particular crystallization habit of the mixture. This last point (crystallization habit) is the least predictable. Although it is quite easy to accurately determine the expected free water content, it is only by experience (trial and error) that the crystallization (hardening) characteristics of a particular fertilizer formulation can be accurately determined. Impurities in the phosphoric acid and other raw materials, the type and source of potash, the temperature and moisture content, and a host of other subtle and unpredictable factors often have a major influence upon the physical properties of the material discharged from the dryer. At times the product may be crisp, hard, and easily screened and crushed; then again, with all conditions "apparently" the same, it may be "dry" but quite soft and plastic—a condition that can quickly lead to screen blinding, upsetting of the recycle loop, and plugging of the crushers.

Countercurrent Process Cooler (Second-Stage Dryer)

The adverse effect of most of the transient and unpredictable operational problems described above can be largely eliminated by routing all of the dryer

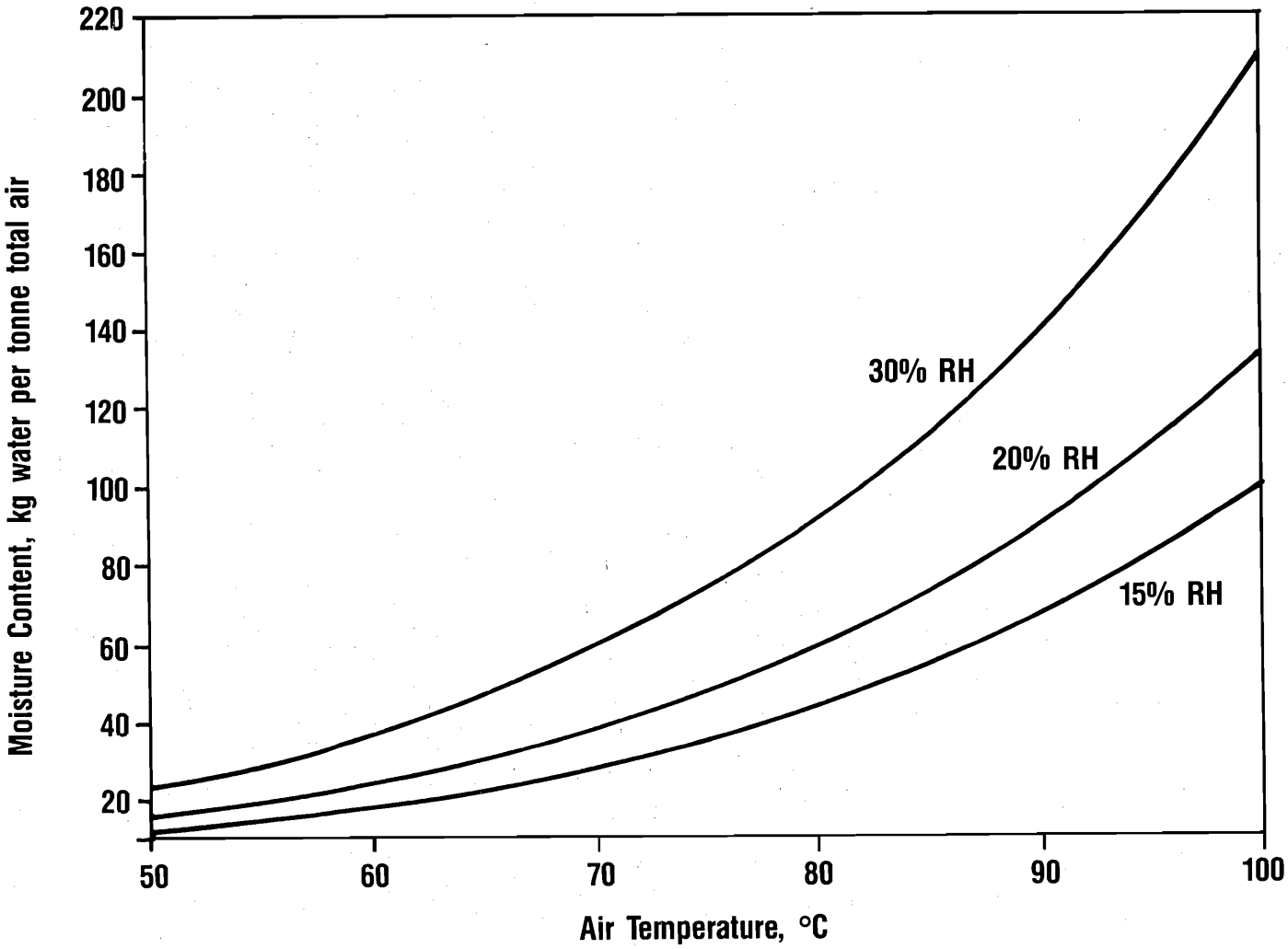

Figure 8. Effect of Temperature and Relative Humidity on Moisture Content of Air.

discharge material to a process cooler, which may be more properly referred to as a second-stage dryer. A countercurrent air-to-fertilizer flow configuration is preferred for maximum cooling in this unit. The transfer of fertilizer material from the dryer to the process cooler should be made by means of an inclined conveyor belt; a bucket elevator is not recommended because of the problems associated with the buildup of material in the buckets and discharge chute if the material is plastic or sticky or if a "slug" of "bad" material forms as a result of an upset caused by operator error, burner/air heater failure, or a number of other routine problems that commonly occur in most NPK granulation plants.

The heat transfer capacity of the process cooler should normally be about one-half to two-thirds that of the dryer. The cooler should also be equipped with an air heater to temper (heat) the inlet air if needed to decrease its RH and/or control the temperature profile in the unit. The addition of an air chilling unit with subsequent reheat to more carefully control the RH and temperature of the inlet air may be needed in some locations; of course, the need for this feature would be dependent upon local ambient conditions and the NPK product characteristics. The process cooler serves the following useful functions:

- It allows drying to continue; typically, about 15%-25% of total drying occurs in the process cooler.
- It serves as a "safety valve" to accommodate process upsets. It makes the entire system more "forgiving".
- It adds time at a slightly reduced (and controllable) temperature profile to allow the material to crystallize and harden before it is subjected to screening and crushing. As a result, the screens are more likely to remain clean (free from blinding), and the crushers will perform more efficiently because the oversize particles are harder and therefore will fracture more easily. Material

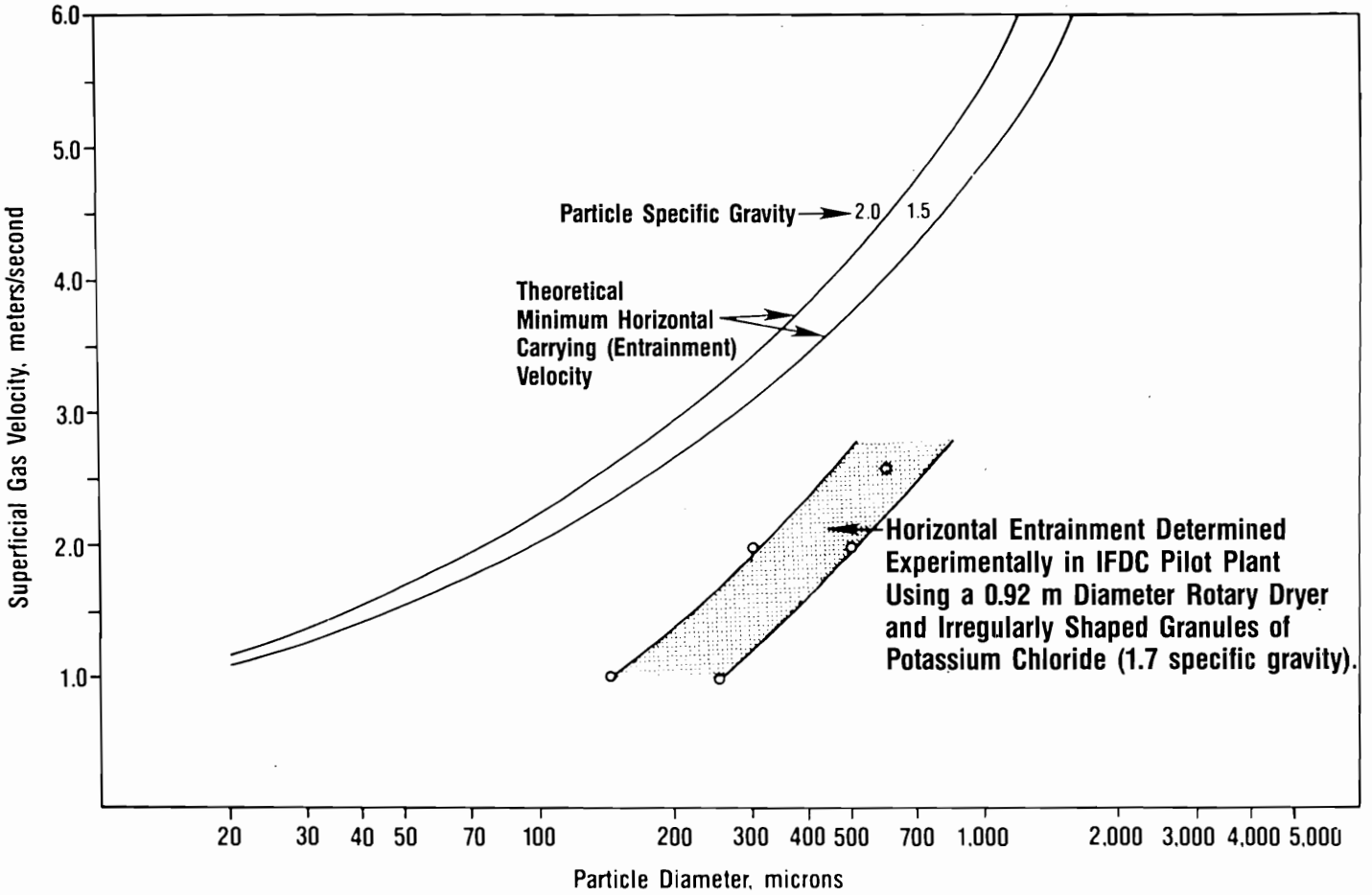

Figure 9. Effect of Particle Size and Gas Velocity on Entrainment of Particles.

plasticity and the resultant plugging of the crushers, screens, and downstream chutes are largely eliminated.

Screens

A key element in NPK granulation is precision screening to ensure that the bagged product will have good long-term storage properties. This is especially applicable to high-nitrogen grades manufactured from either ammonium nitrate or urea. If the process screening system is well designed, it is usually not necessary to install additional downstream screening facilities (for example, polishing screens after final product cooling or before bagging). Of course, such additional screening will be helpful, but the relative merits and need for such polishing-type screening should be determined on the basis of the design and performance of the basic process screening system and the specific product characteristics. The following process screening system is recommended for most NPKs especially those containing high levels of ammonium nitrate or urea.

- Square-mesh wire screen (stainless steel) should be used to ensure the production of well-rounded (minimum surface area) granules. Well-formed granules are of key importance to minimize surface contact points and residual dust and small particles that cause caking during long-term storage. The screening action on a square-mesh wire screen is more likely to "scrub" the granules and more effectively remove bits and pieces of fines. This is especially true if a horizontal gyratory-type screening machine is used. Stainless steel screen wire is recommended because its resistance to corrosion results in a smoother wire surface that resists build-up of solids and plugging.
- Product granules should be relatively large, in the range of 2-5 mm or even larger, to minimize contact area and, therefore, caking. The production of such large granules will influence the particle size of the recycle and the resultant granulation properties. Even with a 2-mm recycle particle (maximum size), it is often not necessary to crush the recycle; however, this point must be carefully considered depending upon the overall size distribution of the

recycle fraction. The size distribution may change quite significantly from formula to formula even though the screen size range of the final product remains constant.

- Single-deck screens are recommended because they allow easy access for inspection and cleaning without interrupting the process. In addition to ensuring the production of fertilizers with a minimum tendency to cake, clean screens are also of key importance in maintaining good process control.

- Horizontal gyratory-type screening machines are preferred over inclined units, especially for the product screens. The horizontal units are preferable because if they become blinded due to the lack of attention they will overload and stall; thus, they will automatically prevent "fines" from being discharged as product, a major cause of caking. If inclined screens become blinded, they continue to operate while discharging fines with product thus causing considerable problems with caking on the one hand and control of granulation on the other. Also, as previously mentioned, the horizontal-type units will more effectively "scrub" the granules to remove residual small particles and dust, thus decreasing the risk of caking.

- The ratio of the fertilizer material feed rate to the screening surface area should be quite low. For the oversize screen, about 10-20 tph/m² is recommended, whereas only about 5-10 tph/m² is recommended for the product screen with the smaller openings. Of course, the design of the screening machine and the screen open area (product size) have a major influence on the screening capacity under a given circumstance. However, it is important to note that many NPK plants often suffer from having too little screening capacity.

Oversize Crushers

Crushers are not 100% efficient in crushing oversize material on a single pass; an efficiency of about 50% or less is more likely. The crushing efficiency actually obtained, of course, depends on a number of factors, most importantly the required particle size distribution and the crushing characteristics of the material.

To avoid the risk of recycling a large amount of uncrushed or only partially crushed oversize to the granulator and upsetting the granulation process, which is very sensitive to particle size distribution, the material from the crushers should be recirculated to the oversize screens as shown in Figure 10. Although this procedure increases the capacity needed for the screens and crushers, it ensures that the maximum particle size of the material recycled to the granulator will be smaller than the product and thus improves granulation control.

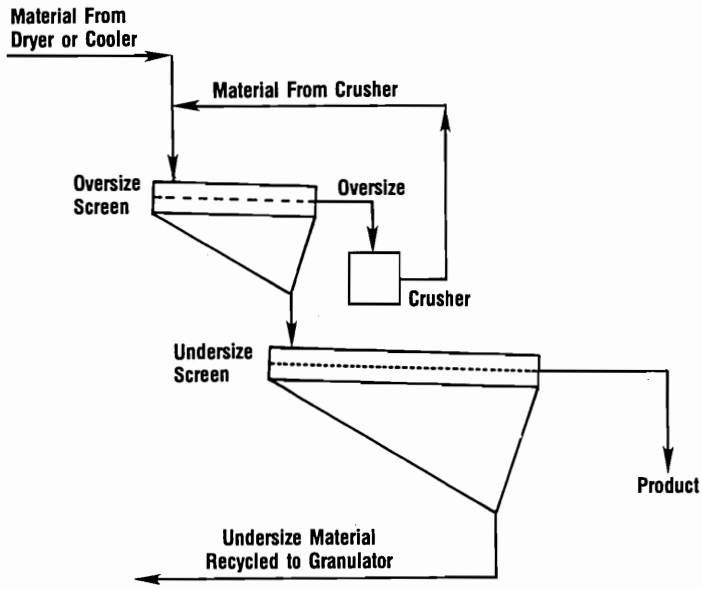

Figure 10. Closed-Loop Screening and Crushing System.

Because the size distribution of the solid particles is of such major importance in agglomeration-type granulation, extraordinary care should be taken in determining the optimum particle size characteristics required for good granulation. This type of information is learned best through testing in commercial-scale equipment. If such large-scale testing is not possible, smaller scale (pilot plant) studies can often be effectively used to provide valuable comparative data. These test data should then be used to determine the optimum design of the screening and crushing system.

Product Cooler

After screening, a conventional rotary- or fluidized bed-type product cooler is recommended. The perforated tray, countercurrent cascade-type cooler is also a good choice. Of course, the temperature and RH of the cooling air used in these units must be adjusted, depending upon ambient conditions, to effect cooling without wetting of the product. A final product temperature of about 43°C or slightly less is recommended. Excessive cooling is not recommended, especially in humid areas, because too much cooling could result in the absorption of atmospheric moisture by the material; this could lead to caking.

Conditioning

Many NPKs should be conditioned to add extra protection against caking. A kaolin-type clay is recommended. Usually about 0.5%-1.0% by weight is required; however, this depends heavily upon the NPK product characteristics and the properties of the clay. The benefit of using oil or wax to help bind the clay to the granules is not always clear; the oil or wax does, however, help to settle dust in bulk storage and bagging areas even if it does not always fully adhere the clay to the granule surface. If an oil-type binder is used, all conveyor belts downstream from the binder addition system should be "oil proof" to avoid ply separation and failure. Belting made from neoprene or polyvinyl chloride is not severely affected by oil-type binders or other organic-type conditioning agents.

The application of oil to NPKs, especially those produced by agglomeration, is often difficult because of the relatively unpredictable absorption characteristics of the granules from one grade to another. For those grades containing ammonium nitrate, especially in combination with potassium chloride, the use of oil should be avoided for safety reasons. A more detailed discussion of the potential safety hazards of mixing organic materials with nitrate-containing fertilizers can be found in the *Fertilizer Manual* and the references cited therein.

The most effective way to add solid conditioning agents to granular fertilizers is by use of a specially designed rotary drum application unit. The design parameters for such drums can also be found in the *Fertilizer Manual*.

Storage and Bagging

The recommended, and usually most practical, product storage and bagging system for hygroscopic NPKs consists of (1) a relatively small humidity-controlled bulk storage area (building) representing about 1 to 2 days' production. This bulk storage area should be divided according to the expected number of grades produced over a 1- to 2-day period; a minimum of two or three drive-in storage bays is recommended. This small and segregated storage method will also greatly facilitate changing of grades with a minimum of lost time. This method of bulk storage before bagging will minimize, and usually eliminate, the accumulation of "grade change" products that are so far off specification that they cannot be shipped. After a brief period of storage in bulk (overnight or perhaps a day or two) to allow for initial "pile set" and to certify the analyses, the product should be bagged in moistureproof bags. Bagging directly from the production unit or bulk storage of freshly made product in overhead bins is not recommended.

The optimum bag construction for long-term storage in humid areas consists of an open-mouth bag fitted with a loose polyethylene film liner that is at least 0.1 mm thick. The outer jacket should be constructed of woven polypropylene or some other strong and durable material. The liner should be tied, and the outer jacket should be stitched. The stitching should not penetrate the liner. Heat sealing of the liner is not recommended because if precautions are not taken such sealing usually entraps air that may result in pillow-shaped bags. Handling, especially stacking, such pillow-shaped bags is difficult. Venting entrapped air from such bags by piercing the film liner is a common practice but this should be avoided because such venting allows atmospheric moisture to seep into the bag, causing wetting and caking.

Process Plant Dehumidification

If hygroscopic NPKs are produced (especially those containing urea) and the ambient relative humidity at the plant site is in excess of about 50% for more than about 8 consecutive hours on a routine basis, it is essential that the process plant building (and bulk product storage building) be tightly enclosed and ventilated with low-RH air. Furthermore, if the temperature inside these enclosed buildings is excessive, then it will be necessary to cool and dehumidify the air to maintain comfortable and safe working conditions at an acceptable RH that will prevent "wetting" of the plant and equipment. Excessive "wetting" caused by the hygroscopic fertilizer material and dust accumulations will lead to excessive corrosion, electrical failures, safety problems (slippery floors and walkways), and a number of adverse process problems particularly with conveyor belt idlers, dust collection systems, screens, and air handling systems.

Recommendations Specific to the Production of NPKs Containing Urea

Urea-based NPKs are among the granular fertilizers that are most difficult to produce. On the basis of the foregoing general discussion and the particular characteristics of most urea-based NPKs, the criteria shown in the Appendix are recommended as a starting point for the basic design of a plant well suited for producing urea-based NPKs or other NPKs that exhibit similar characteristics such as excessive plasticity, low tolerance to elevated temperatures, and low CRH. These recommended design features are also applicable to the more tolerant NPKs. However, with these more tolerant NPKs, more latitude in the design and operating criteria may be allowed.

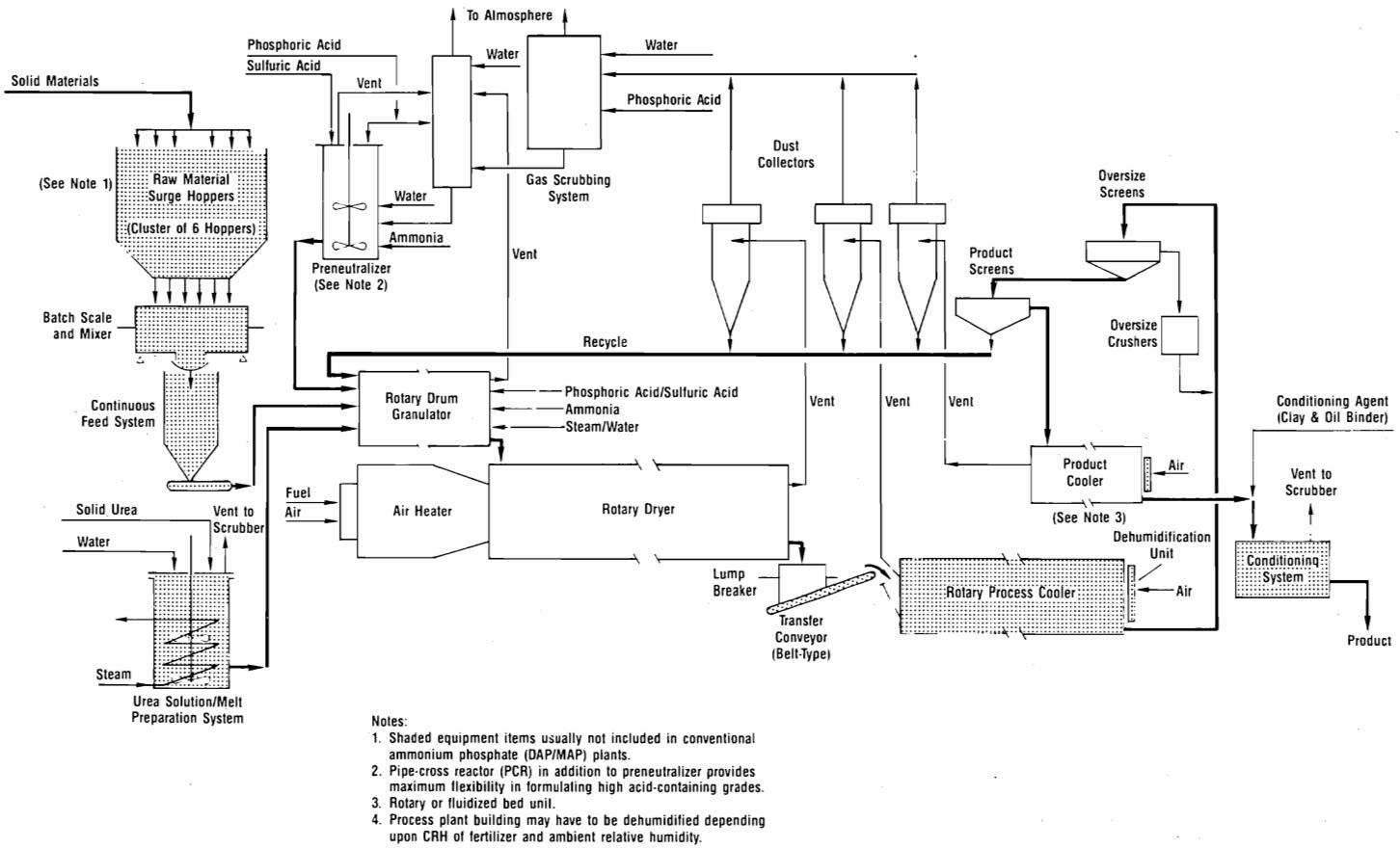

Figure 11. Recommended Process Flow Diagram for Maximum flexibility in Producing Granular NPKs Based on Agglomeration.

A process flow diagram of an NPK granulation plant embodying the recommended features is shown in Figure 11. Also indicated in Figure 11 are the features that are most often missing in a plant designed primarily for the production of DAP/MAP.

Verification of Recommended Plant Design and Operating Parameters

The recommended design and operating parameters for NPK granulation plants described in this bulletin are thought to be near optimum on the basis of data obtained from a number of IFDC pilot plant-scale trials and experience with several commercial-scale operations. However, because no two formulations (grades) or plants respond in exactly the same way to a given set of conditions, extrapolation and judgment are required when attempting to set the design basis for a "new" grade or plant.

Conclusion

The fundamentals of granule formation and processing for agglomerated NPK fertilizers differ markedly from those for DAP/MAP fertilizers. For this reason, many well-designed DAP/MAP plants experience difficulties when called upon to produce NPKs. The difficulties are most pronounced when the NPKs contain urea or other temperature-sensitive and hygroscopic ingredients. The plant design and operating criteria described in this bulletin are intended to guide those involved in planning new NPK plant projects or troubleshooting and modifying existing units. This bulletin may also be used as a checklist during the various stages of project development to help ensure that the special requirements for NPK plants are not overlooked.

BEST AVAILABLE COPY

APPENDIX—Design and Operating Criteria for Urea-Based NPK Granulation Plants

Solid Urea Feedstock—
Prilled urea is preferred because its small physical size helps to effect relatively homogeneous incorporation into the granule structure. Very small and broken prills are the most desirable.

Urea Solution—
If the urea content of formula is more than about 20%, it is often preferable to dissolve a portion of the urea to produce a hot (105°C) 75%-80% urea solution. The availability of urea solution adds considerable flexibility to the process. The solution is sprayed on top of the bed of material in the granulator. In most instances, a solution of urea is preferred over an anhydrous melt.

Other Solid Raw Materials—
Standard-grade materials are preferred. Nongranular run-of-pile (powdered) monoammonium phosphate and superphosphate are recommended. If superphosphate is used in combination with urea, it should be ammoniated to minimize unwanted reactions that result in the release of water of crystallization contained in the superphosphate. In general, the use of superphosphate in combination with urea is not recommended and should be avoided, even if the superphosphate is ammoniated. Standard grade muriate of potash is preferred because of its good flow characteristics and more optimum particle-size distribution. Good flow characteristics of all solid raw materials are desired to facilitate handling and accurate metering.

Preneutralizer—
A standard, atmospheric tank-type preneutralizer is preferred. An NH_3:H_3PO_4 mole ratio of about 0.5 to 0.6 is recommended in the preneutralizer to achieve a low free water content while still maintaining a fluid and pumpable slurry. This is especially important if a significant amount of sulfuric acid is also neutralized in the unit. The preneutralized slurry at a mole ratio of about 0.5 to 0.6 should be about 127°C and contain no more than 15% free water. The preneutralizer and its auxiliary equipment (agitator, pumps, and piping) should be constructed of corrosion-resistant materials to facilitate the use of a mixture of phosphoric and sulfuric acid, thus adding considerable flexibility to the process. In general, if a higher mole ratio (for example 1.5) is used, especially if sulfuric acid is also present, the free water content of the slurry will have to be higher to facilitate pumping.

Granulator (rotary)—
The length-to-diameter ratio should be at least 3. The greater length, compared with most DAP and many North American NPK plants, facilitates granule formation and gives the operator more flexibility in controlling the agglomeration process. The NH_3:H_3PO_4 mole ratio of the material discharged from the granulator may be quite variable depending upon the properties of the raw materials. However, a mole ratio between 1.0 and about 1.8 is expected to be optimum. The lower mole ratio will simplify operation of the scrubbing system and tend to improve the process control. The free moisture of the product discharged from the granulator will usually be in the range of about 2% to 3%. The recycle-to-product ratio is expected to vary from about 3 to 6. A ratio of 6 is recommended for design. If the process is based on a solid ammonium phosphate source (a preneutralized slurry is not used), then a design recycle-to-product ratio of about 3 is sufficient.

Cocurrent Dryer—
The length-to-diameter ratio of this rotary unit should not exceed about 6. The superficial velocity of the air (at outlet conditions) should not exceed 2.4 m/sec maximum (2.0 m/sec preferred). The maximum temperature of the outlet air should not exceed 80°C, and the RH at this temperature should not exceed 15%. An outlet air temperature of about 75°C at 20% RH is recommended as the design basis. The moisture of the material discharged from the dryer should not exceed 1.0%; a value of 0.8% is recommended for design provided a second-stage dryer (process cooler) is used. The temperature and humidity profile in the dryer is extremely important, and the optimum values will vary from product to product.

Countercurrent Process Cooler—(Second-Stage Dryer)
The length-to-diameter ratio of this unit should not be less than 6; 7 to 8 is preferred. The inlet air should be tempered (heated) and/or conditioned to ensure that the RH is 60% or less. The superficial air velocity should not exceed 2.0 m/sec. The low velocity is recommended because of the relatively large amount of minus 1.0 mm particles in the material. It is preferred that these small particles be removed (separated) by the screens rather than by the airflow/dust collection system. The unit should be designed to achieve a material (discharge) temperature of not more than about 54°C at a free moisture content of no more than 0.6%. Further cooling of the product fraction is performed in a separate operation.

Screening—
Single-deck horizontal gyratory-type units are recommended. The screen wire should be stainless steel and of the square-mesh style. If inclined, electrically (or motor) vibrated screens are used, they should be for oversize separation only, not for product screening. The hourly loading of the oversize screen should not exceed about 20 t/m², and the loading of the horizontal gyratory-type product screen should not exceed 50% of this value (25%-30% preferred).

Oversize Crushers—
Double rotor chainmill-type crushers or double row cage mills are preferred. The discharge assemblies of the mills should not be restricted and should be constructed of flexible rubber (conveyor belting) panels that can be flexed from the outside by an operator using a hammer. A flared-type discharge assembly for the crushers is recommended to help avoid the accumulation of solids. The crushed oversize should be recycled to the oversize screen on a closed-loop basis to ensure that only the fine-material fraction from the screens is returned to the granulator as recycle.

Product Cooling—
Either a rotary-drum or fluidized-bed unit is recommended. The single-pass, counter-current, cascade-type unit is also acceptable. The cooling unit should be located immediately ahead of the conditioning unit. The RH of the cooling air at inlet conditions should not exceed 50%. The temperature of the product discharged from the cooler should not exceed about 43°C. In all cases the temperature of the cooled product should be about 5°C above the average ambient temperature to avoid absorption of atmospheric moisture on the surface of the material.

Conditioning—
A standard rotary drum-type conditioning unit is recommended. Screw-type mixing units should be avoided as they tend to grind and break the product granules.

Bulk Storage and Process Plant Dehumidification—
If ambient conditions normally exceed about 50% RH for extended periods (more than about 8-16 h), provisions should be made to dehumidify the process plant and bulk storage buildings. Cooling and proper ventilation may also be necessary for worker comfort and safety. Adequate ventilation is especially important because all buildings should be tightly constructed and closed to maintain a dry inside environment (RH of 40%-50%).

Bagging—
The products should be bagged in moistureproof bags shortly after production. Direct bagging from the production unit is not recommended because off-specification product could inadvertently be bagged and because flexibility is lost in handling product during grade-change periods. In addition, bag set (caking) is minimized if the fresh product is allowed to "pile set" for a short period of time.

Bibliography

1. Achorn, F. P., and D. G. Salladay. 1976. "TVA's New Pipe-Cross Reactor Process for Granular Ammonium Phosphates," Paper presented at American Chemical Society Meeting, San Francisco, California, U.S.A.

2. Chinal, P., C. DeBayeux, and J. F. Priat. 1986. "Dual Pipe Reactor Process for DAP, NP, and NPK Production," IN *Proceedings of the 36th Annual Meeting of the Fertilizer Industry Round Table*, pp. 30.

3. Fischbein, M., and A. M. Brown. 1988. "High Quality Granular Ammonium Sulphate Production," Paper presented at the International Fertilizer Industry Association, Limited, Conference, Edmonton, Canada.

4. Hemsley, J.D.C., and Francisco Roig. 1972. "The Manufacture of Granular Compound Fertilizers Based on Urea as the Principal Source of Nitrogen," IN *Proceedings of the ISMA Technical Conference held in Seville, Spain 20th to 24th November, 1972*, International Superphosphate and Compound Manufacturers' Association Ltd., London, England.

5. Hoffmeister, G., and C. P. Harrison. 1977. "Physical Properties of Granular Urea-Based NP and NPK Fertilizers," IN *Proceedings of the 27th Annual Meeting Fertilizer Industry Round Table*, pp. 162-171.

6. International Fertilizer Development Center. 1979. *Fertilizer Manual*. IFDC-R-1 (also available from the United Nations Industrial Development Organization, Vienna, Austria), Muscle Shoals, Alabama 35662 U.S.A.

7. Medbery, J. L., and F. T. Nielsson. 1981. "Fundamentals of Granulation," IN *Proceedings of the 182nd American Chemical Society National Meeting*, Paper No. 20, New York, New York, U.S.A.

8. Salladay, D. G., and B. R. Parker. 1980. "Commercialization of the TVA Pipe-Cross Reactor in Regional NPK and DAP Granulation Plants in the United States," Paper presented at Annual Meeting of the Fertiliser Association of India, New Delhi, India.

9. Schultz, J. J., and E. D. Frederick, (Eds). 1988. *NPK Fertilizer Production Alternatives*, IFDC Special Publication SP-9, International Fertilizer Development Center, Muscle Shoals, Alabama 35662, U.S.A.

10. Schultz, J. J., and J. R. Polo. 1987. "The Role of Agglomeration in the Fertilizer Industry," Paper presented at the 20th Biennial Conference, Institute for Briquetting and Agglomeration, Orlando, Florida, U.S.A.

11. Sheldrick, W. F. 1970. "The Prediction of Granulation Plant Performance From Temperature, Moisture Relationships in the Granulator," IN *Proceedings of the 20th Annual Meeting, The Fertilizer Industry Round Table*, pp. 96-100.

12. Sherrington, P. J., and R. Oliver. 1981. *Granulation*, Heyden & Son Inc., Philadelphia, Pennsylvania, U.S.A.

13. Tennessee Valley Authority. 1976. *Studies of Granulation of Compound Fertilizers Containing Urea—A Literature Review*, Bulletin Y-108, National Fertilizer Development Center, Muscle Shoals, Alabama 35660, U.S.A.

-203

Special Publication IFDC–SP-15
May 1991
1M

International Fertilizer Development Center
P.O. box 2040
Muscle Shoals, Alabama, U.S.A. 35662

ISBN 0-88090-094-6