PNAB-434

SECOND USAID/GOI WORKSHOP ON ALTERNATIVE ENERGY RESOURCES AND DEVELOPMENT

COAL CONVERSION AND BIOMASS CONVERSION

***

MAURYA PALACE-SHERATON HOTEL
NEW DELHI, INDIA

FEBRUARY 4 - 6, 1985

***

TABLE OF CONTENTS

	PAGE
INTRODUCTION	1
AGENDA	3

SESSION 1 - FEBRUARY 4, 1985

1. OPENING REMARKS

D. Bienstock, U.S. Department of Energy (PETC)	5
Introducing:	
Owen Cylke, U.S. Agency for International Development	6
Maheshwar Dayal, Secretary, Department of Non-Conventional Energy Sources (DNES)	8
M. K. Sridhar, Technical Director, Bharat Heavy Electricals Limited (BHEL)	23

SESSION 2 - FEBRUARY 4, 1985: COMBUSTION

1.	R. P. Krishnan/S. Chandrasekaran/A. V. V. Murthy/ C. Bhaskaran/S. Shanmugam - Evaluation of Freeboard Performance in a Fluidized Bed Combustor	44
2.	K. M. V. Malarkkan/S. Sundararajan - AFBC Boiler Scale-up	67
3.	M. Chakraborty - Coal-Water Mixture Fuel and Preliminary Studies on Its Rheological Characteristics	84
4.	K. M. V. Malarkkan/P. V. L. Sarma/ K. Nandakumar - Coal-Water Slurry Combustion in Fluid Beds - Prospects in India	108
5.	R. Vasudevan - Combustion of Biomass in an Atmospheric Fluidized Bed Combustor	127

6. R. Vincent - Tennessee Valley Authority (TVA) Involvement in the Commercialization of Atmospheric Fluidized Bed Combustion (AFBC) for Utility Application 137

6. Panel Discussion 154

7. Dr. Sidhu's Address Honoring Professor B. K. Mazumdar 173

SESSION 1 - FEBRUARY 5, 1985: COAL PREPARATION AND GAS CLEANUP

1. A. K. Chakravarti - Beneficiation of Difficult Cleaning Coking Coal 178

2. R. S. Rangan/S. R. Rao - Hot Gas Cleanup; BHEL's Programme on Granular Bed Filter (GBF) 189

3. R. Vaidyeswaran - Gas Cleanup -- A Review 202

4. Panel Discussion 216

SESSION 2 - FEBRUARY 5, 1985: BIOMASS CONVERSION

1. P. D. Grover/K. K. Baveja/T. R. Rao/ P. V. R. Iyer - Development of a Village Level Gasifier 247

2. H. B. Mathur - Development of Small Size Gasifier - C.I. Engine System for Agricultural Energy Needs 267

3. M. B. Durgaprasad/R. N. Pandya - Development of Wood-Based Gasifier Engine Systems 300

4. V. Flanigan/J. Goss/A. Talib - Recent Operating Experience with 3 KW U.S. Prototype Gasifier for Use in India 316

FINAL PANEL DISCUSSION 335

APPENDICES

A. Presentations Made at Biomass Session, Feb. 5 361

B. Workshop Attendees 419

SECOND WORKSHOP

USAID/GOVERNMENT OF INDIA

COOPERATIVE PROGRAM ON

ALTERNATIVE ENERGY RESOURCES DEVELOPMENT

COAL CONVERSION AND BIOMASS CONVERSION

The Second Workshop of this Cooperative Program was held at the Maurya Sheraton Hotel in New Delhi, India on February 4-7, 1985.

The intent of the Workshop was to review the progress of the program during the past year; to encourage U.S. specialists to discuss with their Indian counterparts the direction and future of the program; to assess the status of the individual projects through site visits to the facilities and address any concerns or anticipated problems in meeting the objectives of each of the collaborative projects; and to provide a forum for technical exchange between U.S. and Indian industry to understand the need for and availability of technology, products and services in the U.S. and India in specific areas of interest in coal and biomass conversion.

The meeting also led to specific project-related discussions in order to develop and/or modify work plans for implementing the selected projects. Site visits were made prior to the Workshop to review the progress made on the individual projects during the past year.

Four areas have been selected for collaboration in coal conversion and three in biomass conversion. The four major coal areas are:

- Fluidized-bed Combustion
- Gas Cleanup and Separation
- Coal-water Mixtures
- Coal Cleaning

The three major biomass conversion areas are:

- Development of a Village-Level Gasifier (5 HP) for Irrigation Pumps Based on Charred Agricultural Residue

- Utilization of Producer Gas in Small (3 to 5 HP) Engines

- Development and Field Implementation of Small Wood-Based Gasifier Engine Systems (5 to 30 HP)

The Workshop sessions included presentations by Indian scientists/engineers and by a few U.S. team members, followed by panel discussions. At the opening of the Workshop, representatives of the Government of India and its participating units, the USAID office in New Delhi and USDOE provided introductory remarks which emphasized the need and importance of the technology development in meeting India's energy needs.

During the Workshop sessions, presentations covered progress made in the above technologies during the period November 1983 to February 1985, and the status of specific biomass conversion technologies being independently pursued in India by various organizations.

At the request of the Department of Non-Conventional Energy Sources, Government of India, additional presentations in the area of biomass conversion were made on February 5 by scientists/engineers from the Indian private sector and government institutions.

Also, at a dinner on the first day of the Workshop, Professor B. K. Mazumdar, recently retired Director of the Central Fuel Research Institute in Dhanbad, was honored for his contributions in the field of coal science.

AGENDA
SECOND USAID/GOI WORKSHOP
ON
ALTERNATE ENERGY RESOURCES

Monday, February 4, 1985

Morning Session

10:00 a.m. - 12:00 noon	Introduction -- *D. Bienstock*, U.S. DOE (PETC) Presentations by the following organizations: • USAID -- *O. Cylke* • DNES -- *M. Dayal* • BHEL -- *M.K. Sridhar*
12:30 p.m. - 01:30 p.m.	Lunch

Afternoon Session: Combustion -- *Y.P. Abbi* (BHEL), Chairman

02:00 p.m. - 02:30 p.m.	Freeboard Performance in a Fluidized Bed -- *S. Chandrasekaran* (BHEL) -- *R.P. Krishna* (ORNL)
02:30 p.m. - 03:00 p.m.	AFBC Boiler Scaleup -- *K.M.V. Malarkkan* (BHEL) -- *S. Sundararajan* (BHEL)
03:00 p.m. - 03:30 p.m.	Preparation and Combustion of Coal Water Mixtures -- *M. Chakraborty* (CFRI) -- *K.M.V. Malarkkan* (BHEL)
03:30 p.m. - 03:50 p.m.	Combustion of Biomass in an Atmospheric Fluidized Bed Combustor -- *R. Vasudevan* (BHEL)
03:50 p.m. - 04:20 p.m.	Break
04:20 p.m. - 05:00 p.m.	Panel Discussion
07:30 p.m.	Reception and Dinner Award Presentation to Professor B.K. Mazumdar for his contributions to coal science

Tuesday, February 5, 1985

Morning Session: Coal Preparation and Gas Cleanup -- *Professor B.K. Mazumdar* (CFRI), Chairman

09:00 a.m. - 12:00 noon	Coal Beneficiation -- *A.K. Chakravarti* (CFRI)
09:30 a.m. - 10:00 a.m.	Hot Gas Cleanup -- *R.S. Rangan* (BHEL)
10:00 a.m. - 10:30 a.m.	Cold Gas Cleanup and Separation -- *R. Vaidyeswaran* (RRL)
10:30 a.m. - 10:45 a.m.	Break
10:45 a.m. - 11:30 a.m.	Panel Discussion
11:30 a.m. - 12:30 p.m.	Lunch

AGENDA
SECOND USAID/GOI WORKSHOP
ON
ALTERNATE ENERGY RESOURCES

Tuesday, February 5, 1985 (continued)

Afternoon Session: Biomass Conversion -- *O.P. Vimal* (DNES), Chairman

02:00 p.m. - 02:30 p.m.	Village Level Gasifier -- *P.D. Grover and K.K. Baveja* (IIT)
02:45 p.m. - 03:15 p.m.	Utilization of Producer Gas In A Small Horsepower Utility Engine -- *H.B. Mathur* (IIT)
03:30 p.m. - 04:00 p.m.	Development of Wood-Based Gasifier Engine Systems -- *A.C. Pandya* (ISEI)
04:15 p.m. - 04:45 p.m.	Recent Operating Experience with 3KW U.S. Prototype Gasifier for Use in India -- *V.J. Flankgan*, University of Missouri, *J.R. Goss*, University of California, *A. Tallo*, The MITRE Corporation

Concluding Session: Panel Discussion -- *D. Bienstock*, Moderator

- *S.R. Faruqi* (DNES)
- *M.K. Sridhar* (BHEL)
- *B.K. Mazumdar* (CFRI)
- *R. Vaidyeswaran* (FRL)
- *R. Ichord* (USAID)
- *D. Swain* (USAID)

07:30 p.m. Dinner

*The following paper was presented on February 4 during the afternoon session on Combustion
Tennessee Valley Authority (TVA) Involvement in the Commercialization of Atmospheric Bed Combustion (AFBC) for Utility Application.
Robert Q. Vincent (TVA)

OPENING SESSION - MONDAY, FEBRUARY 4, 1985

****

INTRODUCTIONS BY MR. DAN BIENSTOCK (USDOE/PETC)

I am pleased by this large attendance. We have representatives here at the head of the table from the major laboratories involved in this program.

To address us initially is Mr. Owen Cylke. Mr. Cylke has had a long distinguished career in the U.S. Foreign Service. He is presently Director of all AID programs in India and previously was Deputy Mission Director in Egypt. I understand he is a strong supporter of energy programs.

Mr. Cylke.....

****

MR. CYLKE

I am the Director of the USAID mission in India, which is co-sponsoring this seminar with the Department of Non-Conventional Energy. I am delighted to be here but certainly do not intend to make a speech about energy -- it is really not my field -- but I would like to say that the USAID programs worldwide, and particularly in India, are increasingly trying to focus their resources on areas of science and technology and their applications to development. Our program in India now is devoting perhaps 30% of its entire program to the technology side. We would be anxious to do even more. There is no question but that alternative energy, non-conventional, opportunities suggest ways that science and technology can be applied to development paradigm in a concrete and direct way, more so than in many other areas. And so we have a special interest in this area, not only for its content but for the leadership it can give and the insight it can give to other areas where science collaboration can take place. We have been traditionally working with ICAR, with ICMR, with the Department of Science and Technology with successful science programs over

the years. What strikes us about this program, however, is its opportunity to really come to grips with a problem which can make a difference in people's lives, particularly in the countryside in India. And it is for this reason that we have given such strong support to this program, and we would intend to continue such support. Over the last five years we have organized two programs with the Department of Non-Conventional Energy and we are currently discussing a third program which will continue support for this kind of workshop and other programs of this nature.

Having said that, my role here today is really just to wish you good luck in this conference and to make a commitment that USAID, for its part, feels very strongly about these kinds of programs, is open to new ideas and certainly open to expanding its involvement in these kinds of areas if ideas such as that should come from this conference.

Thank you.

****

Thank you, Mr. Cylke. Our next speaker is Mr. Maheshwar Dayal. Mr. Dayal is Secretary of the Department of Non-Conventional Energy Sources. Prior to this, Mr. Dayal served as President of

a Science Commission of UNESCO and as an Alternate Governor of the Board of Governors of the International Atomic Energy Authority in Vienna. He was also associated with the design and construction of the first nuclear reactor in India, Apsara, along with Dr. Bhabha, and was also in charge of India's first nuclear power station at Tarapur.

Mr.Dayal.....

****

MR. DAYAL

It gives me great pleasure to participate in the opening of this Second Workshop which is being held as part of the bilateral India-US scientific program relating to energy development. The Department of Non-Conventional Energy Sources is coordinating the implementation of the Indian side of this half of the Department, I would like to extend a cordial invitation to all United States and Indian participants in this Workshop.

The main topics covered by this Workshop, coal conversion and biomass conversion, reflect certain common scientific interests

of Indian and U.S. specialists in the field of energy. The specific projects in the areas identified for cooperation would be of considerable significance to our long-term energy economy.

While India would appear to have large coal and biomass resource endowments, these are not very large in per capita terms. According to an estimate, India's total fossil fuel resources including coal are only about 1/90th the per capita resources of the United States and 1/140th those of the U.S.S.R. So far as biomass is concerned, we are deeply conscious of the growing denudation of our forests. The need for reversing this trend and providing a green biomass cover on our wasteland is absolutely paramount. Taking into account the growing population and its vast needs, the need for efficient conversion and utilization of all available energy resources becomes obvious. Importance and potential role of new and renewable energy sources in the Indian energy scene were recognized in 1980 when a specific program for implementation during this five year plan was prepared and necessary allocations made. Government's commitment to this area was underlined when the Commission for Additional Sources of Energy was set up in 1981, followed by the creation of a full-fledged Department of Non-Conventional Energy Sources in 1982. This interest has been recently reaffirmed in the approach to the seventh five year plan. While the detailed program and physical targets for the seventh plan have not yet been finalized, a major expansion in the programs can definitely be

expected and, not only is it to be expected, but as has been remarked by Mr. Cylke, this is a program which has the promise of making an immediate impact on the quality of life of vast millions of our people, particularly in the rural areas.

The area of biomass production, conversion and utilization forms one of the important segments of the activities of the Department. Work on identification and experimental cultivation of quick-growing species of trees has been identified in recent years and intensified. We have recently approved two projects relating to the production of woody biomass on sub-standard soil in arid and semi-arid regions for implementation between Indian and U.S. scientific organizations. Work in this connection has become urgent in view of the resolve to develop and reclaim wastelands. The Prime Minister has recently announced the establishment of a wasteland development board with the object, among others, to reclaim about five million hectares of land per year. The various concerned departments in the Planning Commission are presently giving shape to this program which presents both a challenge and an opportunity. As I estimated in a paper prepared early last year, even if one-fifth of the estimated 18 million hectares of barren wasteland can be covered by an energy plantation con power program, a generation capacity of about 48 thousand megawatts can be created, which is more than the entire installed electric capacity in the country today from all thermal, hydro and nuclear sources put together.

Furthermore, large areas of denuded land would be provided with green cover, fuel wood and fodder potential. The power from such plantations would be made available from a number of decentralized locations, thus minimizing transportation and distribution costs. About a thousand hectares of land can provide about 3 megawatts of power besides providing fuel wood or charcoal for the cooking needs of 125 to 150 families. This could also provide substantial employment and raise rural incomes. Investment on such projects could be as low as Rupees 12 thousand or roughly $1000 per kilowatt. Furthermore, there are substantial amounts of wood and agricultural wastes of different types. The development of suitable gasifiers and engines which can operate on biomass fuels would obvicusly be needed in any program for increased utilization of biomass resources. It is in this context that the three projects presently being funded under our Indo/US program assume significance.

As there will be comprehensive reports on the progress on these projects in this Workshop, I do not wish to go into details. I would only suggest that the Indian and U.S. teams make every effort to achieve the objectives of these projects in the shortest possible time. We expect a large program for the deployment of the biomass gasifiers for water pumping and power generation during the Seventh Plan, and it is therefore necessary to achieve technological readiness as early as possible.

DNES has also taken up a program for the demonstration and propagation of improved wood stoves with the view toward reducing the pressure on existing biomass resources. This program which is a little over a year old aims at the installation of 500 thousand improved wood stoves throughout the country and converting 5000 villages into "smokeless" villages in this financial year itself. These figures are to be upscaled tenfold during the Seventh Five Year Plan.

Among other important bio-energy programs of the Department are those relating to draft animal power and utilization of urban wastes and, of course, biogas. We have estimated 80 million work animals, whose combined contribution to the total energy consumption probably matches the contribution of the entire installed electrical capacity in the country. India is one of ten countries in the world which is taking up scientific study aimed at a more rational utilization of draft animal power. Our programs for the utilization of urban wastes include an incinerator plant being set up in Delhi which will treat the municipal wastes of the area, and also generate more than 3 megawatts of power. Apart from that, there is a very ambitious program for setting up sewage gas plants in several towns. A string of sewage treatment gas generation and utilization projects in the towns along the river Ganga are already planned in some details and this we hope will start getting implemented

very shortly along with the other plans for the control of pollution along the Ganga, of which you must have heard since there is very great high-level interest and a Ganga Authority is also now going to be established. The establishment of plants based on pyrolysis of urban wastes and the extraction of energy from landfills in cities is also envisaged during the Seventh Plan.

Now, coming to biogas, it is well-known that India is among the countries that have pioneered the production and utilization of biogas from animal wastes. About 400,000 such plants have already been installed all over the country and an expanded program of installation of one and a half million plants over the next five years is proposed in our draft proposals for the Seventh Five Year Plan. In the current financial year, 150,000 biogas plants are being installed under the DNES program. These plants will yield an annual return of Rupees 500 million in fuel and fertilizer equipment. A relatively novel concept being tried out during the past few years in India relates to the installation of digesters with the capacity of 45 cubic meters and above for community and institution biogas plants. More than 200 such plants have been approved for installation in different locations and several are already functioning.

Apart from bio-energy, the other most important renewable energy resource in India is solar energy. We all know that most parts

of India are well endowed with solar installations and receive 5 to 7 kilowatt hours per square meter for 250 to 300 days of the year. Solar thermal as well as solar photovoltaic technologies are of considerable relevance in this context and we have a very substantial program of research and development demonstration and utilization presently underway in all of these areas. The research efforts cover materials such as selective coating, solar collectors and concentrators, prime movers, thin film amorphous and other types of solar photovoltaic devices and systems for various applications. There are 30 to 40 ongoing research projects in each area relating to thermal and photovoltaic technologies.

In the current year, we have started a program for large-scale deployment of solar thermal systems such as water heating units, dryers, desalination units, timber kilns, etc. The Central Government is encouraging the installation of such systems through a variety of technical support measures, incentives and subsidies. The response from industrial, commercial and other organizations to these measures has been extremely encouraging, and soon we should be having hundreds of such systems operating all over the country. It is estimated that the units that will be installed in this financial year will save more than 50 million units per year equivalent of electricity. Studies indicate that substantial savings in conventional fuels, such as coal or oil, are possible when solar thermal systems are utilized

as a supplementary source in a large variety of applications. For the individual users, DNES has been promoting domestic solar water heating units, which are just starting, and solar cookers. All these have led to the establishment, I am happy to say, of a good industrial base which enables the manufacture, assembly, installation and servicing of a variety of solar thermal systems all over the country.

Just a brief word about photovoltaics. DNES has direct responsibility for programs leading to the development, production and application of solar photovoltaic devices and fair progress has been achieved in this area in the Sixth Plan. The program seeks to establish pilot scale production facilities based on locally developed technology, and to develop and demonstrate systems for a variety of applications. Production of photovoltaic cells, modules and systems is now underway at two units -- Central Electronics Limited and Bharat Heavy Electricals Limited. Among the systems successfully demonstrated in India are water pumping systems for irrigation and drinking water supplies, community radio and tv sets, street lighting units, power supplies for offshore platforms, microwave repeater stations, etc. A major program taken up in the current year relates to rural electrification through solar photovoltaics. Under this program street lighting units are being installed in over 200 villages in association with the Rural Electrification Corporation, State Electricity Boards and renewable energy

agencies in the states. Within a few months, over 40 villages have already been provided street lighting powered by solar photovoltaic systems. Considering the fact that there are at least ten thousand villages in the country where it will be almost impossible or very expensive to supply electricity in the conventional manner in any foreseeable future, we expect that there will be good scope for the employment of photovoltaic devices in the country. The feasibility of such applications is particularly interesting in situations where the loads are small and the locations are distant from electricity grids. However, the future demand for photovoltaics is heavily dependent on achieving substantial cost reductions and improvement in efficiency. We hope that improved and new technology such as amorphous silicon-based photovoltaics will develop adequately within the next few years.

As you perhaps all know, an integrated energy system was conceived and installed in 1982 at Masudpur village near Delhi, and it has been very interesting to see the impact of this relatively modest project, which has already started showing results in improving the quality of life for the whole village. I would like in this connection to make mention of another integrated energy project which is taking shape under the Indo/US program at Salojipally village in the Medak District of Andra Pradesh. This particular project is being implemented with support from the USAID and the DNES. The biogas and photovoltaic

device components in the village are already operational; in fact, Salojipally village became the first village in the country to have solar-powered streetlights. Today there are four pumps operating on photovoltaic power and these are providing irrigation facilities in a village which never had such service. In addition, community tv and radio sets have been operating for some time and are now an integral part of the village environment. The solar thermal component of the power generation project, amounting to 22 kilowatts, is expected to be completed some time this year. On the whole, the Salojipally project provided a valuable opportunity to Indian and US scientists to gain experience in system design and integration and field level evaluation.

Another project under the Indo/US program relates to solar crop drying. This has been quite successful, and it is felt that the design of solar crop dryers for rice developed under this project can be commercialized very soon.

Other important decentralized energy sources are small hydropower and wind energy. We have established an alternate hydroenergy center at Roorkee which is presently collaborating with a United States university in the development and installation of small hydrogenerators and new control devices with varying load and hydro systems. A wind energy center set up under the Department in Allahabad and another center being established in Bangalore

will take this area further forward we hope in a vigorous fashion. A program for the demonstration and large-scale installation of water pumping windmills is already under implementation. Most recently, the Department has commenced action on the procurement of wind electric generators and the establishment of wind pumps. Two megawatts of wind pump capacity are likely to be installed within the next few months.

DNES is also funding an R&D program in the area of magnetohydrodynamics power generation with the cooperation of Bharat Heavy Electricals Limited and the Bhabha Atomic Research Center. A pilot project based on coal with a thermal input capacity of 5 megawatts is nearing completion at Tiruchirapalli adjacent to the BHEL major complex. Future large-scale utilization of this technology will depend upon the development of appropriate coal gasification and combustion technology as well as the other systems and sub-systems such as magnets, plasma channel, etc. We have therefore a very direct and close link with the other programs relating to improved utilization of coal and improvements in the efficiency of coal, which is the other part of the team present at the workshop. In this connection, some of the work that is being done, for example in fluidized bed boilers, has very considerable significance not only in terms of better utilization of Indian coals with their high

ash content but also for their possible fallout and applications for the utilization of agricultural wastes. It is very well-known that very substantial amounts of surplus power could be generated from agricultural wastes of existing farms and existing agricultural operations by the utilization of improved types of boilers, by the use of reheat from the flue gases, and also by other new technologies which would enable much higher efficiencies and also provide surplus power for the neighboring networks.

There are lots of other exciting programs relating to energy from the oceans, chemical sources, hydrogen, battery powered vehicles, etc., but shortage of time doesn't permit me to cover all of these topics.

I would perhaps, however, show three or four slides to point up my presentation, which might be of some interest.

This is a picture of the Salojipally project photovoltaic installations, the panels providing a small local power unit -- as it were a micro-micro central power station -- which is a village-level power station. This is the advantage of some of these systems.

This is also at the Salojipally project -- one of the outlets from the photovoltaic power installation, where a pump is being

run from the power obtained from the sun directly above the head of the village, without having to depend on the vagaries of the grid.

Now, this is another part of the project which has been set up. What is being seen in the background is a large biogas plant and in the foreground a biogas-operated pump. So the animal and human wastes of the area can also be utilized for generation of energy and power. This can serve and is serving the village needs.

This is not Salojipally, but I thought it might be interesting to show a slide of a solar-lit village near Delhi called Achheja. You see the street lights are transforming life in the village. which never had electricity since the dawn of history. Now they are getting it from a resource which is right above their own heads.

This is a solar-powered television in the same village and demonstrates, of course, the enormous hope for improving the quality of life and getting instruction in other inputs into a village scene by very modest investments in power. Television takes only about 40 or 60 watts of power and one can provide a medium whereby ideas, education, literacy programs, all kinds of cultural and other inputs can be brought into the homes of the villagers themselves by using solar energy, a resource available

in abundance.

A part of the program that I mentioned -- improved wood stoves. This is one of the village ladies who has made some of her own slight modifications to further improve it, and this is now being adopted in very wide measure. As I mentioned, there are 20 some models of these stoves which are being propagated. but something like 500 thousand of these would be installed this year, resulting in a savings of more than 4 lakh tons of wood a year, which is equivalent to something like 16 crores of rupees annually. This is the sort of impact one can make with a relatively modest improvement.

Another such improved stove. This is the fixed model -- the other was a portable model. This also not only improves efficiency of wood use and cuts the fuel wood consumption by half, but also reduces smoke to almost zero levels and that has its own great advantage.

This is just a picture of the biogas unit at Masudpur where we are also adopting certain integration of solar energy. What you see here is what we call a solar canopy on the biogas unit which improves its yield, particularly in the winter months.

This is a picture of the fertilizer which comes out as a byproduct of the biogas and, in this particular case, the

fertilizer is being dried and packed. This can be a very good source of fertilizer for improving crop yields in horticulture and other purposes. So one can see the wide impact in the demonstrations of these programs.

Now, I would like in conclusion to mention that we are very happy to once again welcome cooperation with our scientific colleagues in all parts of the world -- in this particular case the United States. The programs that have been going on in this particular field have been in many ways an example of the way we can cooperate in a mutually advantageous fashion. It is not a question of great import of technology or large commercial deals, but this particular question of joint work by scientists on both sides is one which can yield results which are very interesting and of great advantage and very satisfying to scientists on both sides. I feel that, the more we can do to enable working scientists to come together and do work of interest with a minimum of bureaucratic and procedural obstacles, the better it will be and the more satisfactory our work will continue to be. I have every confidence that this, in fact, will continue in this fashion and we shall start getting more and more results and more and more applications in the shortest possible time.

Thank you very much.

****

****

Thank you, Mr. Dayal, for a most interesting and thorough review of India's alternate energy program. I would like this audience to know that the complete text of this morning's presentations and all the technical presentations following will be incorporated in Proceedings, which each of you will receive shortly after my return to the States.

Our next speaker would have been Mr. Varadarajan, who is Director General of CSIR, but unfortunately he is ill.

The next speaker was to have been Mr. Puri, Chairman of BHEL. However, although he desired very much to come, he is now in Europe and, in his place, Mr. Sridhar will make the presentation. Mr. Sridhar is presently the Technical Director of Bharat Heavy Electricals Limited. He has held several responsible positions in BHEL. He was General Manager of the Trichy plant from April 1976 and later became the Executive Director in charge of BHEL's Overseas Projects Division.

I would like now to introduce Mr. Sridhar.....

****

Mr. SRIDHAR

1. INTRODUCTION

Dr. Dayal has very aptly covered the various areas of non-conventional energy sources which our country has so far developed and what plans it has along with USAID and other agencies all over the world. It is now my privilege to present to you the other areas for which all of you are assembled here for the next two days --the conversion of fuel and other fossil energy sources through various means of transformation to energy, what BHEL has achieved so far, what are its ongoing plans and what are its futuristic plans. I am very happy to say that in the last two years the BHEL R&D programs, both in the conversion of fossil energy sources as well as the non-conventional energy sources -- whether they be magnetohydrodynamics or the solar photovoltaic development -- have had a very good push, thanks to Dr. Maheshwar Dayal's unstinting support.

Before proceeding with some of the details of my presentation, for the benefit of those of our distinguished visitors from USAID for the first time, I would like to touch briefly upon what BHEL is. Bharat Heavy Electricals -- BHEL -- is the largest engineering and manufacturing company in India and is committed

to meeting the energy needs of the country. BHEL's share in the total power generating capacity installed in India has risen from a mere 2% in 1971 to 55% in 1983. In fact, BHEL's share in the additional capacity installed in the year 1983-84 was 91%. However, considering that the world average per capita consumption of electricity is 1884 kilowatt hours and that the corresponding figure in India is only 192 kilowatt hours, the scope for further growth in installed capacity in India is considerable. Hence, BHEL has a very heavy responsibility in fulfilling its role, for which it was set up by the Government of India 20 years back. All efforts are accordingly being made by BHEL to improve the reliability and efficiency of the power generation units, apart from developing technologies for developing cheaper sources of power and converting it for the ultimate end use. Fossil fuel energy research and development programs at BHEL started in 1974. Today the company is vigorously pursuing these programs at two of its centers -- the boiler manufacturing plant at BHEL Trichy and the corporate research and development division at Hyderabad. The objectives of these R&D programs are: first, developing other fuels as substitutes for oil for the boilers as well as the systems; second, improving the performance of the existing power plants; third, developing advanced coal-based power generating systems; fourth, developing systems suited to the high-ash highly abrasive coals that are used in India; five, utilizing biomass and other waste fuels; six, assimilating data on fuels, related equipments and technologies.

2.0 FOSSIL FUEL SCENARIO IN INDIA

2.1 Coal and Lignite

In India, coal is the major fossil energy used for power generation. It has registered a compounded growth of nearly 8% per annum, and is expected to grow from 50 million tons in 1982-83 to 200 million tons by the end of the century. The total coal resources in India are estimated at 112 billion tons spread over 53 coal fields. The quality of coal, however, is far from consistent. As much as 40% of the resources contain more than 32% ash, which is homogeneously ingrained along with the organic matter. Besides, around 1185 million tons of coal as found in Bihar are of low volatile content, having less than 16%, and about 2500 million tons found in Assam are of high sulfur content, varying from 3 to 7%.

There are also a few fields which yield coal containing minerals of low melting point. According to an estimate made in 1982, the production of washery rejects, that is, the coal containing about 60% ash -- from the coking coal and non-coking coal washeries -- was of the order of 15 million tons per annum and 4.2 million tons per annum

respectively. About .4 million tons of washery tailings were also produced. This is just to give you an idea of the various types of coal -- the good, the bad, the ugly -- being mined all over the country. This is the coal for which the technology has to be developed for conversion to power generation at the most optimum and competent prices. The R&D programs of BHEL are tailored to achieve optimum utilization of the aforementioned varieties of coal, lignite and washery by-products.

2.2 Oil

In India, due to an aggressive crude oil exploration program, there has been a comfortable growth in the indigenous production of oil and gas. Projected demand for indigenous production of crude oil can be found in the handout which Mr. Bienstock mentioned in the form of a table (Table 1), so I will not touch much upon that. However, the gap between the demand and the indigenous production necessitates continued research on oil substitution systems. Whatever the increase in oil production which we have achieved or which is in the plan, there will be a continued gap between the demand and indigenous production.

2.3 Biomass

TABLE I: DEMAND FOR AN INDIGENOUS PRODUCTION OF CRUDE OIL IN INDIA

Year	Crude Oil Demand (Mill.Tonnes)	Crude Oil Production (Mill.Tonnes)	Crude Oil Production (% of Demand)
1984-85	41	29.6	72
1989-90	57	40.0	70

Today the total consumption of non-commercial energy sources in India is estimated at 190 million tons of coal equivalent. Out of this consumption, agricultural waste is estimated at 43 million tons of coal equivalent. The forest residues, the aquatic biomass, the municipal wastes account for the rest. Optimum use of biomass would go a long way toward solving the energy problem of the country.

3. STATUS OF R&D PROGRAMS BEING PURSUED INDIGENOUSLY

3.1 Ongoing Programs

With this background of the conventional and non-conventional -- I will not touch upon the hydro portion -- energy resources available in India, I would like to briefly touch upon a few of the ongoing R&D programs which are currently going on at BHEL.

3.1.1 Atmospheric Pressure Fluidized Bed Boilers

First and foremost is the development of the atmospheric pressurized fluidized bed boilers. BHEL has come a long way since 1975 when the first work on the fluidized bed combustion boiler was started on a small 10 tons per hour prototype boiler. I am happy to say that our fluidized bed technology is almost on a

par with whatever has been developed anywhere in Europe or the United States. A test rig of .5 x .5 mm size is also available for conducting combustion studies on various fuels. Regular fuels, starting from washery rejects containing 70% ash, bituminous coals of 25 to 50% ash, biomass fuels such as bark, husks, bagasse, sawdust, paper sludge, spent bagasse, solvent residue and spent liquor have been successfully fired in this FBC setup at our boiler plant at Trichy.

I will go on in my paper to discuss the startup of the various FBC projects undertaken by BHEL. We have so far designed and manufactured a process boiler of 5 tons per hour for a distillery; a boiler of 45 tons per hour for a chemical plant; a fluidized bed hot gas generator replacing oil with coal; a converted stoker-fired boiler using bagasse to a fluidized bed boiler; hot gas generator with husks as the fuel; conversion of an oil-fired marine engine to coal at 15 tons per hour. The 45 atms oil-fired marine boiler has been converted to coal using the fluidized bed technique; a ten megawatt utility boiler has been ordered by the Tata Company for the captive power plant for the mines using washery rejects containing 70% ash. This boiler, of course, is still in the

stages of manufacture and we do hope that in the year 1985-86 -- that is, around this time next year -- this boiler will be working at one of the mines near Jamshedpur. A 35 tons per hour utility boiler using bagasse is also on the anvil; the biggest of course is a 60 tons per hour utility boiler for a paper mill on the West Coast using coal, again on the anvil.

So we hope all these boilers, the two biggest ones a 10 megawatt for the Tata Iron and Steel Company and a 60 tons per hour for the West Coast paper mill, using the worst possible coal, will be running by December 1986. Table II summarizes the status of the various FEC projects.

3.1.2 Oil Conservation in Pulverized Coal-Fired Boilers

The next major R&D project which BHEL is ambitiously pursuing is the conversion of oil-fired to the pulverized coal-fired boilers, which are the main source of power generation in the country. The petroleum fuels are used in the pulverized coal boilers for boiler warmup and also for low-load flame stabilization. In view of the uncertainty of the quality of the coal, the maintaining of the oil flame as a support for the stabilization of the coal flame is costing us quite a lot of oil. For effecting oil

TABLE II: STATUS OF THE VARIOUS FCB PROJECTS UNDERTAKEN BY BHEL

S.No.	Commissioning Date	Type of Work	Fuel	Ratings
Currently Operating				
1.	1980-81	Process Boiler	Coal	12 tph (Steam)
2.	1982-83	Process Boiler	Coal	45 tph
3.	1983-84	Hot Gas Generator	Coal	7×10^6 kcals/h
Currently under Execution				
4.	1984-85	Conversion of Stoker	Bagasse	20.5 tph 24.5 ata 340 deg.C
5.	1984-85	Hot Gas Generator	Husk	0.8×10^6 kcals/h
6.	1984-85	Conversion of Oil-Fired Marine Boiler	Coal	15 tph 45 ata 400 deg.C
7.	1985-86	Utility Boiler (10 MW)	Washery Rejects	56 tph 24 ata 400 deg.C
8.	1985-86	Process-cum-Utility Boiler	Bagasse	2x35 tph 64 ata 485 deg.C
9.	1986-87	Process-cum-Utility Boiler	Coal	60 tph 40.5 ata 400 deg.C

conservation in such boilers, we have undertaken the following programs:

(i) Boiler warmup ignition and flame stabilization with low calorific value coal gas. This demonstration project is at the peak of its execution in one of the 60 megawatt power stations in or near Madras.

(ii) Low load flame stabilization by using a split coal nozzle. This we have successfully demonstrated at a power station in Haryana State.

(iii) Direct ignition of pulverized coal has reached a state of commercialization.

We have a project at a number of power stations where, except for the startup, the total support of oil for the flame stabilization can be totally eliminated by the introduction of direct ignition of pulverized coal. We are negotiating with one or two electricity boards to install it in their power stations.

The validity of the concept of boiler warmup ignition and flame stabilization with low calorific value coal gas was successfully demonstrated in a wall-fired 35 tons per hour, 400 deg. C, 40 atm boiler at one of our

manufacturing plants at Hardwar. With the financial support of the Ministry of Energy, the Government of India, the demonstration project for the two 60 MW boilers at Ennore Thermal Power Station are in the early stage of execution.

Regarding the low load flame stabilization using the split coal nozzle which we have demonstrated, we find that, with the normal boiler loads while burning coals with low volatile matter content, oil may be required as a support fuel for stabilization even at high loads. To obviate the need for such support fuel for the flame stabilization, we introduced the split coal nozzle about three years back. With these coal nozzles, the coal flame has been stabilized without any oil support up to loads of about 35%.

The successful application of the high energy arc ignition to oil-fired systems developed by Combustion Engineering, who are collaborators on the BHEL boiler, led to Combustion Engineering and BHEL applying this same concept to pulverized coal-firing as well. To test the suitability of such an ignition system for the high ash coals available in India, we are currently installing a simulated setup of 210 megawatt wind-box oil compartment. Initial trials on the dense phase

transportation of coal, ignition of coal by high energy arc in the laboratory setup have been successful. The complete simulated test facility is expected to be commissioned by March of this year.

3.1.3 Pressurized Fluidized Bed Combustion Boiler

The coal combustion studies in the pressurized fluidized beds are being carried out in a test rig of 200 mm diameter for the Corporate R&D Division of BHEL at Hyderabad. Coal model studies for the development of rotary flow cyclones for application under high pressure and high temperature conditions are also in progress. The pressurized FBC test rig for burning 500 kg per hour of coal and its associated gas cleaning system are under erection.

3.1.4 Combined Cycle Demonstration Plant

Another very ambitious project to make use of our poor quality of coal is the combined cycle demonstration plant, which I do hope by November of this year would be fully commissioned. The basic objective of the coal-based combined cycle plant is to improve overall efficiency of power generation and eliminate the

combustion and erosion problems encountered with the coal-fired boilers due to the high ash coals available in India. We believe that ultimately the solution in India for power generation will be the use the high-ash high-abrasives coals. The quality of the coal, according to the information we are continuously receiving from the Ministry of Energy, is bound to deteriorate further. As it is today, because of the poor quality of coal, the pulverized coal firing capacity is not sufficient to generate the full power for which the boilers and turbines are meant. In fact, the Ministry of Energy has recently asked us whether we can do something by way of supplementing the generation from coal by firing oil, or by coal-oil slurry. Until recently we were not very keen on doing any research on the coal-oil slurry as we are concentrating more on coal-water slurry. But, because of this necessity that has come up, supplementing the coal-fired generation with oil in all of our existing power stations, we are seriously thinking whether some work should be started with USAID. I discussed with Dr. Bienstock a few days back whether anything could be done on firing coal-oil slurry in our coal-fired boilers at the utilities. So we believe that ultimately, after 1990, this combined cycle demonstration plant, which can give us an efficiency as high as 38 to 40% and which can make use

of this poor quality of coal, will be the ideal technology in India. Accordingly, several projects were initiated in these combined cycle demonstration plants. The basic object of a coal-based combined cycle plant is to improve the overall efficiency of power generation, and to eliminate the combustion and erosion problems encountered with coal-fired boilers due to the high-ash coals available in India. BHEL is currently executing at its Trichy unit an inhouse R&D demonstration project on a combined cycle power plant of 6 MW capacity, and it is expected to be commissioned by June 1985. The demonstration plant would be based on a fixed-bed gasifier, capable of operating at 10 atm pressure with a coal throughput of six tons per hour, the gas turbine with dual-firing capability which could generate 4 megawatts of power. The exhaust from the gas turbine would be used to generate an additional 2 megawatts of power using the steam cycle. The fixed-bed gasifier has been totally designed and developed by BHEL. To this atmospheric fluidization facility we are later on proposing to add, in the course of the next three years, a 200 tons per day pressurized gasifier so that the two would run parallel.

3.1.5 Magnetohydrodynamics System

As Dr. Dayal already mentioned, in the area of magnetohydrodynamics the 5 megawatt thermal input pilot plant is under the final phase of commissioning at Tiruchirapalli. This plant has been funded by the Department of Non-Conventional Energy Sources, the Ministry of Energy of the Government of India, and is being jointly executed by BHEL and the Bhabha Atomic Research Center.

These are some of the ongoing projects on coal utilization which BHEL has been executing.

3.2 New Programs

Some futuristic R&D programs which we want to undertake are the development of the circulating fluidized bed combustion technology so that we can upgrade from our existing capability of 30 megawatts to about 60 megawatts, ash agglomeration furnace which I will briefly touch upon, coal-water slurry combustion and, of course, the latest idea that has struck is the coal-oil slurry combustion.

The first phase of the circulating fluidized bed combustion project is aimed at developing the solid recirculation in a fluidized bed, for which a cold model test rig has been set up. The hot model and the pilot plant studies will be taken

up during the next phase. In the meanwhile, technologies available from abroad are being scanned for developing boiler capacities of 60 megawatt and higher using the circulating fluidized bed techniques. Most of the problems of power stations in India are attributed to the erosion of pulverizers, the boilers and the conveying system, and inadequate stabilization of the flame, also attributable to the high ash content of the coal available in the country. To overcome these problems, it is planned to develop an ash agglomeration furnace in which only crushed coal is used and the entire ash, or a substantial portion of the ash, is removed in a molten form so that the rest of the boiler, the ID fan system, and the electrostatic precipitator are free from the high ash that is passing through them. A test rig to burn 140 kg per hour of coal is under construction. Some success has been achieved in obtaining stabilized coal-water slurry and firing it in a fluidized bed combustor, and further work with our atomizer burners is being planned and the subject will be discussed in detail in the next two days.

4. STATUS OF R&D PROGRAMS BEING PURSUED JOINTLY WITH USAID

I would like to briefly touch upon the status of the R&D programs being pursued jointly with USAID. My colleagues who are here will be presenting detailed papers on this

today and tomorrow, but I will just briefly touch upon them.

4.1 Ongoing Programs

BHEL and USAID have jointly undertaken the following R&D programs. First, the evaluation of freeboard performance in a fluidized bed combustor, writing of the design of a 30 megawatt fluidized bed combustion boiler developed by BHEL which we are trying to commercialize, combustion studies on the coal-water slurry, and the development of the hot gas cleanup. The spadework regarding the project on the evaluation of freeboard performance in a fluidized bed combustor is complete. The instrumentation and control, including the data acquisition system to be supplied by USAID, have been finalized and this will be shipped to India very shortly. The test rig is being set up at the boiler plant at Tiruchirapalli and is expected to be commissioned by April 1985. USAID has also deputed one engineer from Oak Ridge National Laboratory to work with BHEL engineers on this project. The engineer has so far made very appreciable contributions to this project.

The design package for a 30 megawatt fluidized bed combustion boiler is to be handed over to the engineers of the Tennessee Valley Authority after the conclusion

of the Workshop.

Regarding the combustion studies on the coal-water slurry and the development of hot gas cleanup system, the work planned for these projects has been completed and the necessary approvals obtained. As part of the first project, CFRI of India is also associated while, on the second, RRL of Hyderabad is also associated. It is expected that during the year 1985-86 these two projects will make substantial progress.

4.2 Proposed Programs

I have been talking to Dr. Bienstock about some more proposed programs on which BHEL would like to explore the possibility of taking up joint work with USAID in the following areas: (i) a 30 megawatt fluidized bed combustion boiler demonstration plant after the design is completed and we get the assistance of USAID. The next phase is to put up a demonstration plant somewhere in India to burn this high-ash coal. Other mentioned areas include (ii) reirculating fluidized bed combustion boilers for larger capacity units.

As I said earlier, BHEL is not just engineering and manufacturing the boiler alone. BHEL is also in the

total energy business of converting the basic energy from the source to the ultimate utilization point. We also make the turbines, generators, transformers and whatnot.

With this background in mind, we want to take up if possible with USAID a total system development. The fuel is to be converted to heat energy either through fluidization or gasification, whether it be coal, rice husks, bagasse or the coal washery rejects. With these basic sources of fuel available, what is the appropriate technology to be developed through fluidization, gasification, combustion to the heat energy, and the development of the heat energy to the electrical or mechanical energy through development of suitable engines or gas turbines or hot air turbines, coupled with the cogeneration philosophy. I have been discussing with Dr. Bienstock if there is any way by which, apart from the fluidization gasification on which a lot of work has been done, the development of the Sterling engines or any other biomass engines, or air turbines and gas turbines, can be undertaken. We have been talking with a number of gas turbine and gas turbine manufacturers for we are interested in developing a total system from the basic energy raw materials to the ultimate mechanical or electrical

power. Some work we are trying to do on our own on the development of hot air turbines, hot air engines, Sterling engines, etc. which all can make use of the heat generated through gasification or combustion from biomass low-grade fuels, coal rejects or even solar energy and, last but not least, the waste heat that is going through our furnaces. If we are able to develop a suitable low-temperature high-efficiency engine, the entire waste heat going through in all of our industries can be used for generation of power. It is a very ambitious plan on which we are doing some work ourselves but, if USAID can help us in this, it would be a boon to power development in this country.

I think I have taken much time on this. I am very happy that I am here today and will also be here tomorrow. A lot of my colleagues are participating. The workshop that was held here more than a year back was very pleasant with a lot of useful ideas. BHEL has in the last year, I am very happy to say, with USAID's assistance done considerable work in the conversion of fossil energy, and I am sure we will get a lot from the next few days.

Thank you.

EVALUATION OF FREEBOARD PERFORMANCE IN A FLUIDISED BED COMBUSTOR

R. P. Krishnan
Oak Ridge National Laboratory
Oak Ridge, Tennessee

S. Chandrasekaran
A. V. V. Murthy
C. Bhaskaran
S. Shanmugam
Bharat Heavy Electricals Limited
Tiruchirapalli, India

EVALUATION OF FREEBOARD PERFORMANCE IN A FLUIDISED BED COMBUSTOR

R P KRISHNAN, S CHANDRASEKARAN, A V V MURTHY, C BHASKARAN & S SHANMUGAM

ABSTRACT: *A collaborative research project funded by the U. S. Agency for International Development (USAID) and Bharat Heavy Electricals Limited (BHEL), has been initiated at the BHEL high pressure boiler plant site in Trichy, India. The project involves the design, erection and commissioning of a one metre square cross section atmospheric fluidised bed combustor (AFBC). The test facility will be used to obtain engineering and performance data on the combustion and heat transfer in the freeboard region of the AFBC. High-ash Indian coals, low grade fuels and high-sulfur U. S. coals will be tested in the combustor. The energy Systems Group (ESG) at BHEL, Trichy and the Oak Ridge National Laboratory, USA have the joint technical responsibility for carrying out the project.*

This paper describes the objectives, project schedule, current status, design details of the combustor and auxiliary systems, test program and instrumentation and control.

1.0 INTRODUCTION & BACKGROUND

In order to distinguish the gas and solids flow pattern in a fluidised bed, the bed is divided into three distinct regions (see fig. 1). Close to the bottom of the bed is the air distributer region which is composed of small gas jets or bubbles. Above this region, is the bubbling bed region, where the gas bubbles coalesce and rise to the surface of the bed causing the bed to expand in height and simultaneously allowing the solids and the gases to mix. The region above the expanded bed is referred to as the freeboard region. Here, the gas bubbles collapse at the bed surface and the solid particles are thrown up in the free space. Depending on the particle size and the gas velocity, the particles thrown in the free board are either carried out of the bed by the gas stream or disengage from the gas and fall back into the bed.

The freeboard space in an FBC Boiler has several important functions which affect the overall design and performance of the boiler. These are

- Provides additional residence time for the unburnt carbon fines carried by the flue gases to burn and thereby enhance combustion efficiency.
- In FBC systems employing overbed feeding a significant amount of the combustion occurs in the freeboard.
- The heat released during combustion in the freeboard could be substantial and needs to be extracted for higher thermal efficiency.
- Apportioning of boiler tube surfaces in the "BED", "FREEBOARD", and "CONVECTION ZONES" depends a great extent on the freeboard heat release.
- Dust loading in the freeboard affects the cyclone and baghouse performance downstream of the combustor.
- Sorbent fines elutriated from the main bed into the freeboard could be further utilised to drap additional Sulfur-oxide pollutant by proper freeboard design.
- Nitrogen oxide pollutants released during combustion can be suppressed by selection of the proper freeboard geometry and operating conditions.
- Design of the reinjection system for racycling flyash and unburnt carbon into the main bed, typically employed in FBC systems, is affected by freeboard geometry and the extent of combustion/heat transfer in the freeboard.

Although the importance of the freeboard has been recognised, very little quantitative information is available to design the freeboard

region. Major uncertainties exist in the combustion rate, the heat transfer rate, the solid particle inventory (solids loading), the particle size distribution, the gas and solid temperatures and the gas composition. While some information is available ftom operation of pilot plants and other FBC test facilities, (B&W/EPRI 2m x 2m - 6' x 6'; Pope, Events and Robbins 1m x 1m - 3' x 3'; Leatherhead, UK 1m x 0.8m - 3' x 2'; TVA/EPRI 20 MWe AFBC Pilot Plant) the data are not adequate to satisfactorily design the freeboard.

The literature on heat transfer in the in-bed region (bed-to-tube) is fairly comprehensive. A recent review by Sastry and Sambasiva Rao (1983) describes most of the partinent literature and correlations developed for the in-bed heat transfer coefficient. With respect to the freeboard region, the work of Byam et al, (1981), George and Grace (1982), Xavier and Davidson (1981), contain experimental data on overall convective heat transfer coefficient in the "splash zone" (near the active surface) of the fluidised bed, with the exception of Byam et al. (1981) these investigations were conducted in relatively small beds with sand particles.

Byam et al. Studied the heat transfer to tubes in the splash zone of a PFBC. The combustor was 1m X 0.6m (3 ft. X 2 ft.) cross section and operated on coal. The bed contained 1.25" tubing arranged on 3.5" horizontal and 3" vertical pitch. The tube bank extended from 1.3 to 3 ft. above the distributor and simulated designs proposed for commercial units. The cooling medium was water. The extent and position of cooling could be varied during operation. Measurements of heat flux in the splash zone were made at different bed depths, bed temperature, pressure and excese air. In the experiments, the amount of cooling in the tube bundle located in the splash zone was varied by varying the cooling. The corresponding increase in the heat input required to maintain a constant bed temperature was taken as a measure of the heat extracted by the freeboard tubes. Two basic configurations were examined: (1) in one set of experiments all the tube banks were immersed in a 9' deep bed and (2) in the second set of experiments, part of the tube bank was immersed in a 4' deep bed. Under steady state conditions the heat transferred to the freeboard circuits was obtained at bed depths ranging from 4' to 9' at different bed temperatures. The data obtained in (2) was plotted as a fraction of the heat transfer co-efficient when all the tubes were immersed, i.e., from (1). An experimental decay type correlation was developed for the overall heat transfer co-efficient in the "splash zone" as a function of the heat transfer co-efficient in the bed.

Although this work represents an important contribution to "freeboard heat transfer", the results focus on a very limited but important region in the freeboard. This kind of study should be extended beyond the splash zone in the freeboard to understand the combustion, heat transfer, sorbent utilization with and without flyash recycle.

Krishnan et al. (1983) studied the combustion of Western Kentucky No. 9 coal in a 25 cm (10 in.) combustor with a 1.8 m (6 ft.) freeboard and a 4.2 m (14 ft.) freeboard. Test conditions were restricted to bed temperature near 845°C (1550° F), superficial velocity of 1.2 and 1.8 m/s (4 and 6 ft/s), static bed debth near 0.75 m (30 in.) and excess air 15 to 30%. The bed material was sulfated limestone (mean particle size 730 microns). Four distinct coal particle size cuts ranging from 1800-150 microns were tested. The combustion trends observed in the "short" and "tall" configurations, indicated some additional degree of freeboard combustion especially near the active bed surface with the tall freeboard. However, the data were not sufficient to quantify the extent of freeboard combustion.

The extent of heat released in the freeboard (freeboard combustion) is generally assumed to be around 10-20% of the coal heat input for an underbed coal fed AFBC system. This is again based on limited test data for specific operating conditions (B & W 6' x 6' tests) and may or may not be applicable beyond the limited range of test data. Most of the experimental work in the U. S. is with relatively deed beds which may not be extrapolatable to the shallow beds used in India. The freeboard combustion may be more predominent in shallow beds because of the larger concentrations of oxygen available in the freeboard. Again with overbed fuel feeding, the percentage of freeboard combustion is bound to be higher than with underbed feeding because of the

fines escaping to the freeboard as obtained in the TVA 20 MWe Pilot Plant Data. This again needs to be quantified for Indian coals and washery rejects.

The proposed study is an attempt to perform a detailed investigation of the freeboard region. For this purpose, a 1m X 1m (3 ft. X 3 ft.) experimental fluidised bed combustor adequately instrumented to bridge the existing data gaps has been suggested. It is also expected that together with the freeboard data, a broad but specific engineering and performance data base on the combustion characteristics of high ash Indian coals and other fuels sufficient for the design and scale up of commercial size AFBC (upto 30 MWe) can be generated from this effort.

2.0 PROJECT OBJECTIVES

This project is a detailed investigation on a specific region of fluidised bed combustor designated the "freeboard region" in an experimental test facility with the following objectives.

- Design, construct and commission a 1m X 1 m cross section atmospheric fluidised bed combustion (AFBC) research test facility at BHEL-Trichy.
- Gather performance data on combustion, heat release and heat transfer rates along the freeboard height.
- Obtain data on dust loading and gas composition along the freeboard height.
- Obtain combustion efficiency/carbon burn-up data as a function of fuel type and size.
- Obtain data on SO_2/NO_x emmissions in the freeboard and their effect on unit emmission and sorbent utilisation.
- Correlate experimental data in terms of the design and operating parameters for performance prediction and scale up to large AFBC system.

3.0 PROJECT SCHEDULE AND CURRENT STATUS

The following tasks and schedule have been identified to achieve the objectives stated in section. 2

Task No.	Tasks Description	Start Date	Completion Date	Current Status
1.	Detailed Engineering Design of the test facility, and specification of instrumentation	November '83	March '84	Completed
2.	Preparation of the design document	March '84	May '84	Completed
3.	Review of the design by FBC organisations/experts in the US with BHEL Engineers	June '84	August '84	Completed
4.	Ordering of special instrumentation from the U. S.	July '84	October '84	Completed
5.	Preparation of manufacturing drawings, procurement of materials and equipment and fabrication of components	October '84	February '85	Ongoing
6.	Erection and commissioning	March '85	May '85	
7.	Testing, data gathering and data analysis	June '85	July '86*	
8.	Final report preparation	June '86	August '86	

* BHEL will continue the testing through December 1986

4 0 DESIGN DETAILS

The detailed engineering design of the combustor, including the anxiliary systems, the test program and specification of instrumentation for ths test facility are described below :

4 1 General Arrangement of the Test Facility

The test facility will be located in the Fossil Energy Development Complex along with the existing FBC test rigs. The existing peripheral facilities such as water treatment plant, condensate storage tank, air cooled condensers, coal preparation, coal handling, chimney and other utilities will be utilised for the test facility. The overall systam arrangement is shown in Fig. 2

Coal and limestone contained in storage bunkers will be metered by gravimetric feeders and fed pneumatically underbed as a mixture into the combustor. Provision to feed the coal/limestone mixture overbed is also made in the design. The forced draft fan/roots blower (5000 Nm^3/h, 2600-3000mm water column) used for combustion air will also supply the necessary air at the required pressure for transporting the fuel. An electrical preheater or a fluidised bed airheater will be provided to preheat the air as needed. The combustion gases will pass through two sets of cyclones (primary and secondary). Provision to re-cycle the flyash collected from the cyclones into the combustor is also made. Isokinetic dust sampling probes will be provided at the inlet and outlet of each of the cyclones. Space has been set aside for installing and testing a baghouse at a later stage. The flue gases from the secondary cyclone will be vented through an induced draft system to the existing chimney.

The bed material will be drained periodically through overflow pipes located at several elevations along the height of the combustor. The bed material will be cooled and stored in bins. In addition, a bottom drain is also provided for draining the bed material when needed.

4.2 Combustor

The fluidised bed combustor is designed as a hot water generator (65 tons/hr at 10 $kg/cm^2(g)$ pressure and 179°C) with the following features.

- Variable bed height (300 mm to 1300 mm)
- Variable freeboard height (1000 mm to 6000 mm)
- Refractory lined walls
- Recycle of solids from the primary and secondary cyclones into the main bed
- Underbed or overbed coal/sorbent feed.
- Overfire air

The four sides of the combustor upto 2000 mm (6.6 ft.) height from the distributor plates are refractory lined. One side wall is detachable. The detachable wall carries the in bed tube bundles. The number of tube layers and the pitch of the tubes can be varied by dropping the detachable wall. A provision is made to insert a water wall test loop in the side opposite to the detachable wall. The water wall test loop consists of three sections each of 600 mm height and connected in series. The purpose of the waterwall test loop is to measure the heat pick up in the bed wall region.

The combustor height will be initially set from ground level at 7.5 m (24.6 ft.) in Phase I and later extended to the maximum height of 11 m (36 ft.) in Phase II. The four sides of the freeboard are refractory lined. Provision to insert water wall test loops along the freeboard height at selected locations, to measure the heat pick up is also made in the design. The heat pick up will be cross checked by installing heat flux meters at the selected locations.

The convective tube bank will be located at the exit of the freeboard. The tube bank will be horizontal. By moving the convection tube bank, the freeboard height will be set at the desired level above the expanded bed (1000mm to 3000 mm in phase I and 1000 mm to 6000 mm in Phase II). The convection tube bank will be raised or lowered by an overhead chain block. The flue gas temperature at the outlet of the combustor is expected to be around 400°C.

A nozzle type air distributor plate bolted to the windbox will distribute the air entering the combustor. The coal/limestone mixture and recycled fly ash will be fed through individual nozzles attached to the distributor plate.

The combustor will be bottom supported. The maximum height of the combustor will be 11m from the distributor plate. Provision for pressure, temperature, heat flux measurements gas and soiids sampling, overfire air and manhole doors for charging and lighting-up of the bed are made along the side walls.

Start up the bed will be achieved by sprinkling charcoal and kerosene on the bed surface, and controlling the fluidising velocity until the bed attains the desired temperature when coal feeding will be initiated.

Fig. 3 is a detailed representation of the combustor.

4.3 Auxiliary Systems

A brief description of the coal/limestone feed system, flyash recycle bed overflow and bed drain, fiyash disposal particulate removal, air distributor, air/flue gas and water circuits is given below i

Coal/limestone feed system

Flexibility has been built into the coal/limestone feed system design to permit either underbed or overbed feeding. In the underbed feeding mode, coal and limestone are discharged from the individual bunkers to the respective gravimetric feeders. The coal and limestone are mixed before they enter the constant speed rotary air-lock feeder. The coal/limestone mixture is then pneumatically injected into the bed through the coal feed nozzle in the distributor plate. The pneumatic transport line is sized to permit the operation of the combustor with Indian coal, US coal and rejects. The line size is 76.1 mm (3") OD 8mm thickness for Indian coal and US coal; for washery rejects the line size is 89.5 mm (3.5") OD 4.85 mm (0.2") thickness.

The schematic of coal/limestone underbed feed system is shown in Fig. 4. In the overbed feeding mode the coal and limestone are individually metered by the gravimetric feeders, mixed, and fed by a screw feeder. The schematic of the overbed feeding system is shown in Fig. 5.

Fly Ash Recycle

The facility has provision for reinjecting the fly ash collected in the ash overflow hoppers located beneath the primary and secondary cyclones. The overflow ensures that a constant level of fly ash can be maintained in the hoppers during recycling. The ash from the hoppers enters a variable speed rotary air lock feeder. It is then pneumatically injected underbed through the feed nozzle provided in the distributor plate. The ash can also be injected overbed to compare the performance with underbed recycle.

The recycle system is designed for recycling upto 5 times the coal feed rate for Indian coal and US coals and upto 3 times for washery rejects. Two lines drawn separately from a single feeder will handle the recycle stream. The line size is 108 mm (4")OD and 8 mm (0.3") thickness. The schematic of fly ash recycle system is shown in Fig. 6.

Bed overflow and Bed drain

Provisions are made along the combustor side wall at specified elevations for overflow of the bed material in order to maintain a desired operating bed height. The number and location of the overflow tappings are shown in Fig. 7 When operating with Indian coal and rejects, the overflow elevations between 350 mm (1.15") and 760 mm (2.5") will be operative. The bed can be operated at five different bed heights at intervals of 100 mm (4"). When operating with US coals the bed height can be maintained at 1100mm (3.6 ft.). 1300 mm (4.3 ft.) and 1500 mm (4.9 ft.). This type of bed overflow arrangement is being successfully used in the BHEL existing facilities and commercial FBC boilers.

In addition to the bed overflow pipes a bed drain pipe 108 mm (4") OD is installed at the bottom of the bed to periodically drain the bed material when required during underbed feed operation. During overbed feeding, a water cooled rotary air-lock feeder will be installed in the drain pipe to facilitate continuous discharge of the bed material.

Fly ash disposal

Fly ash from the ash over flow hoppers located beneath the primary and secondary cyclones. which is not recycled will be collected and stored in bins and sent to the ash ramp for disposal. Provisions are made in the overflow piping for collecting the samples of ash for

analysis. The fly ash transport line is 76.1 mm (3")OD and 5 mm (0.2") thickness.

The schematic of the ash disposal system is shown in Fig. 6.

Air and Flue Gas System

The combustor will be designed for balanced draft operation on air and gas side. The combustion and fluidizing air will be supplied to the combustor by a forced draft fan or a roots blower. The pneumatic transport air for the coal/limes tone and fly ash recycle will also be supplied by the same fan/blower by tapping a line after the air preheater. The air flow quantities will be metered. An electrical air preheater/fluidized bed air heater will be used to preheat the combustion air from 40°C (90°F) to a maximum of 357°C (675°F). The combustion products will flow through the freeboard, convection bank and cyclone seperators and will be discharged to the chimney by the induced draft fan. The flue gas leaving the combustor will be around 400°C (750°F). The air/gas system is shown schematically in Fig. 8.

Water Circuit

The total quantity of demineralized (DM) water required in the test facility will be supplied from the existing DM water tank. At the start of the test, the DM water will be pumped to the condensate storage tank (CST) and stored. The required quantity of water will be drawn from the CST and pumped through the inbed tube bundle, convection bundle and water wall circuit. Four feed water pumps, one with 15 t/hr capacity at 20 kg/cm^2 pressure, and the other 3 with a capacity of 25t h, each at 20 kg/cm^2 pressure are specified. The hot water generated in the combustor approximately 10 kg/cm^2(g) 178°C (350°F) is sent to the air cooled condensers/coolers. The cooled water flows to CST from where the water is recirculated through the system. The schematic of the water circuit; external pipe lines, cooling and water recycle system is shown in Fig. 9.

Particulate Removal

The particulate removal system is designed to separate the solid material (unburnt char, flyash and bed material) from the dust laden flue gas. The system consists of a primary cyclone and a secondary cyclone. The quantity of dust handled in the particulate removal system is approximately 3000 kg/hr (6612 lbs/hr) at a temperature of 355°C (671°F). The dust quantity has been estimated assuming a recycle ratio of upto 5 to 1 (fly ash-to-coal) for Indian Coal and US coal, and 3 to 1 for rejects. The material collected in the primary cyclone and secondary cyclone is recycled to the bed. The design of the primary and the secondary cyclones is based on the Stairmand design proportions. The overall collection efficiency based on the Stairmand design efficiency curves is estimated to be 88.6% for the primary cyclone and 70% for the secondary cyclone.

The particle size range is taken to be between 10 to 350 microns for the primary cyclones and 10 to 200 microns for the secondary cyclones. The dust loading of the exist flue gas from secondary cyclone is estimated to be 1.8 gm/m^3 at 350°C (660°F) Fig. 6 shows the fly-ash recycle system and the location of the cyclones.

Air Distributor

The distributor is a nozzle type design and has the flexibility to accommodate the range of test variables, i. e. fluidization velocity, bed height, underbed recycle, underbed coal limestone feed and coal/limestone particle size. In addition, the distributor plate is designed to meet the pressure drop during cold fluidisation operation. Three distributor plates are envisaged to cater to the above operating range. The overall dimensions of the three distributor plates are 1150 mm square (3.8 ft. x 3.8 ft.) and 10 mm (.4") thickness.

5.0 TEST VARIABLES & TEST CONDITIONS

The design of the combustor and auxiliary systems has been made to provide the necessary engineering/process data to perform the material and energy balance in the main bed and freeboard. The variables of interest are superficial velocity, expanded bed height, bed temperature, excess air freeboard height, coal/sorbent ratio and fly ash, recycle ratio. Three different coals namely bituminous high sulfur US coal, high ash low sulfur Indian coal, and a washery reject will be tested. Because of the wide variation in the composition and heating value (see table 2), the test conditions will be

different for these coals. For example the low sulfur content Indian coal and rejects compared to US coals will not require limestone-sorbent for bed material. Crushed refractory/ash will constitute as the bed material. Again the operating bed depths in the case of low sulfur high ash Indian coals will be much shallow (300 to 700 mm) compared to deep beds (1200 to 1500 mm) as in the case of US coals.

Furthermore the maximum operating bed temperature can be upto 950°C for Indian coals, whereas for US coals the bed temperature is usually restricted to 850°C max. The lower operating temperature with US coals is due to the adverse effects of temperature on sulfur retention beyond 850°C.

To achieve the wide range of test conditions listed in table 2, it is proposed to vary primarily the immersed heat surface in the bed by either reducing the pitch or retracting specific layers of tube bundle or both. However, if this cannot still meet the requirements' the combustion air preheat temperature will be controlled to attain the desired conditions.

TABLE 2

VARIABLE TO BE INVESTIGATED IN THE TEST PROGRAM

S. No.	VARIABLE		VALUE/RANGE		
1	Coal Type		Coal Washery Rejects	Indian coal	U. S. coal
		C	25.60	51.7	71.2
		H	2.02	3.21	5.1
		N	0.9	0.87	1.3
		S	0.3	0.49	4.3
		O	1.40	8.69	6.3
		Moisture	1.31	6.85	3.3
		Ash	68.47	28.20	8.5
		HHV Kcal/kg	2410	4892	7317
		(Btu/lb)	(4338)	(8805)	(13.190)
2	Coal particle size		6 mm X 0 mm (1/4" X 0") 6 mm X 1 mm (1/4" X 1/25") 25.4 mm X 0 mm (1" X 0")		
3	Bed Material Size				
	a. Crushed Refractory/Ash (underbed feeding)	...	3 mm X 0 mm (1/8" X 0") Weighted average size 800 microns		
	b. Crushed Refractory/Ash (Overbed feeding)		4.5 mm X 0 mm (3/16" X 0") Weighted average size 1200 microns		
	c. Limestones (underbed feeding)	...	3 mm X 0 mm (1/8" X 0") Weighted average size 600 microns		
	d. Limestone (Overbed feeding)	...	4.5 mm X 0 mm (3/16" X 0") Weighted average size 1000 Microns		
4	Bed Temperature	...	800 – 950°C (1472 – 1742°F)		
5	Superficial Velocity	...	1.2 – 3.0 m/s (4.0 – 10.0 ft/s)		
6	Expanded bed depth	...	300 – 1500 mm (0.98 – 5.0 ft)		
7	Excess air	...	5 – 30%		
8	Freeboard height	...	1000 – 6000 mm (13.3 - 19.7 ft.)		
9	Ca/S Molar Ratio	...	1.5 – 3.5		
10	Recycle Ratio	...	1.0 – 5.0 (U. S. & Indian coals) 1.0 – 3.0 (Washer rejects)		

An important parameter in the test programme will be the recycle of fly ash. The etfect of varying lhe recycle ratio on combustion efficiency, heat release in lhe bed and freeboard. sulfur retention in the bed and freeboard, dust loading and size distribution, gas compositions and temperature profile in the freeboard will be quantified to the extent possible. Despite the small size of the combustor. tesfs will be conducted to evaluate underbed and overbed feeding modes. These tests are intended to shed light on the overall system performance and engineering of feed system design.

The physical and chemical analysis of the coals sorbent, fly ash and other solid sampie stieams will be routinely made during the test. A detailed test programme matrix will be prepared prior to the actual testing in the unit.

6.0 INSTRUMENTATION & CONTROLS

Conventional controls are adopted for controlling pressure and temperature. On the air side, the transport air, fluidising air and overfire air will be controlled by regulating the dampers provided in the forced draft fan roots blower. These dampers will be modulated by pneumatic actuators. Water flow in the bed and convection tube bundles will be independently controlled to regulate the desired flow in the tube bundles. The flows will be monitored and logged in the data acquision system.

Pressure measurements will be made at every 100 mm spacing along the bed height upto 2 m bed height and at selected locations above 2 m. Tha bed temperature will be monitored at two locations; one at 50 mm elevation and another at 150 mm elevation, in the combustor. The temperature in the freeboard and convection zones will be monitored at selected locations by providing suitable ports to insert thermocouples. Measurement of heat flux in the bed, and before and after the convection tube bundle will be made in each experiment at fixed freeboard heights. The heat flux meter will be installed aiong the four walls at 2500, 3500, 4500, 5500, 6500 end 7500 mm elevations.

A schematic of the pressure, temperatute and heat flux measurement points are shown in Fig. 10. Two gravimetric weigh belt feeders are proposed to monitor the coal feed and the limestone feed continuously within the accuracy of $\pm$ 0.5%.

GAS SAMPLING SYSTEM

The composition of the flue gos will be monitored in three locations (one in the bed and two in the freeboard). A Backman gas analysis system for continuous monitoring of the O_2, CO, CO_2, SO_x, NO_x and total hydrocarbons wiii be used tor this purpose. The gas compositions will be recorded, displayed and fed into the data acquisition system. The principle and range of ihe individual gas analyzers are given below:

Gas Emission	Model	Principle	Range
O_2	755	Paramagnetic	0,5, 10, 25 & 50%
CO_2	864	Nondispersive Infrared	0,5, 20%
CO	864	Nondispersive Infrared	0–1000, 5000 ppm
SO_x	865	Nondispersive Infrared	0–2000, 10000 ppm
NO_x	951A	Chemiluminescence	0–10, 25, 100. 250, 1000, 2500 10000 ppm
HC	400	Flame Ionization	0–4 ppm

DATA ACQUISITION AND ANALYSIS SYSTEM

As the data collection and and analysis is given prime importance in the experimental test facility, a versatile data acquisition system will be employed to gather upto 1000 data points, and simultaneously process the data, display and transmit the data to the existing BHEL computer. A Hewlett Packard Model 3054A system having the following subsystems will be installed for this purpose.

1. Colour Desktop Computer
2. Data Acquisition/Control unit with extendors.
3. Inkjet Printer
4. Graphics Plotter
5. Backup Computer
6. Modem to transmit signal to the main existing ICL Computer,

7.0 ACKNOWLEDGEMENT

The authors wish to thank the U. S. Agency for International Development (US AID) and Bharat Heavy Electricals limited (BHEL) for providing financial support for this effort. Thanks are due to Dr. D. Bienstock, Deputy Director, Pittsburgh Energy Technology Center, U. S. DOE and Mr. M. K. Sridhar, Director/Technical, BHEL for their guidance and encouragement. Appreciation is extended to the staff of Energy Systams Group, BHEL, Trichy and the Engineering Technology Division, Oak Ridge National Laboratories for their assistance in the project.

8.0 REFERENCES

1. V. M. K. SASTRI & N. SAMBASIVA RAO, "Tube–To–Bed Heat Transfer In Gas–Solid Fluidised Bed-A Review", Report submitted to the Department of Science and Technology, New Delhi, India Report No. DST 13 (26)/77; SERC, APR 1983.

2. JOHN BYAM, K. K. PILLAI & A. G. ROBERT "Heat Transfer To Cooling Coils In The 'SPLASH' Zone of A Pressurised Fluidised Bed Combustor.", AIChe Symposium Series 77, No 208. P. 351, 1981.

3. S. E. GEORGE & J. R. GRACE, "Heat Tranfer to Horizantal Tubes In The Free board Region of A Gas Fluidised Bed", AIChe Journal, Vol. 26, No. 5, P. 759-765, 1982.

4. A. M. XAVIER & J. F. DAVIDSON, "Heat Transfer To Surfaces Immersed In Fluidized Beds And In The Freeboard Region". AIChe Symposium Series 77, No. 208, P. 368' 1981.

5. R. P. KRISHNAN, et al, Combustion kinetics of Western Kentucky No. 9 "Corbon Utilization In Fluidized Bed Combustion Systems" ORNL/TM–8616, May 1983.

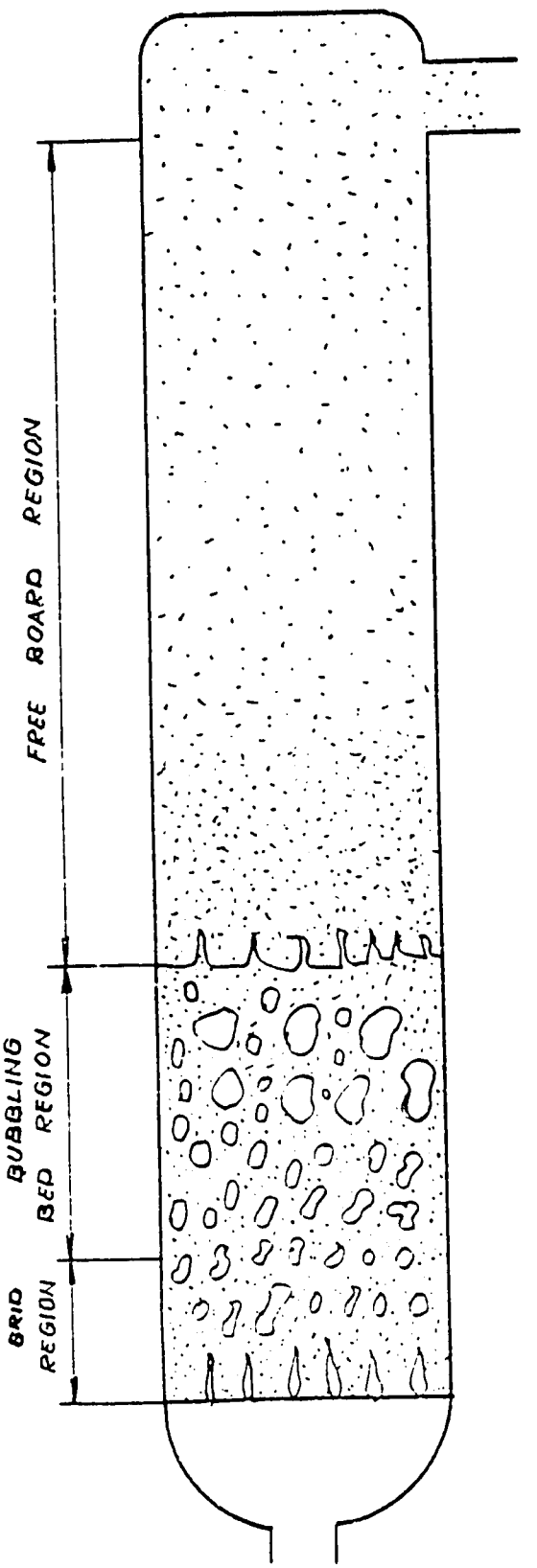

PARTICLE ENTRAINMENT FROM FLUIDIZED BED

Figure-1

IV - 1

GENERAL ARRANGEMENT OF FBC FACILITY

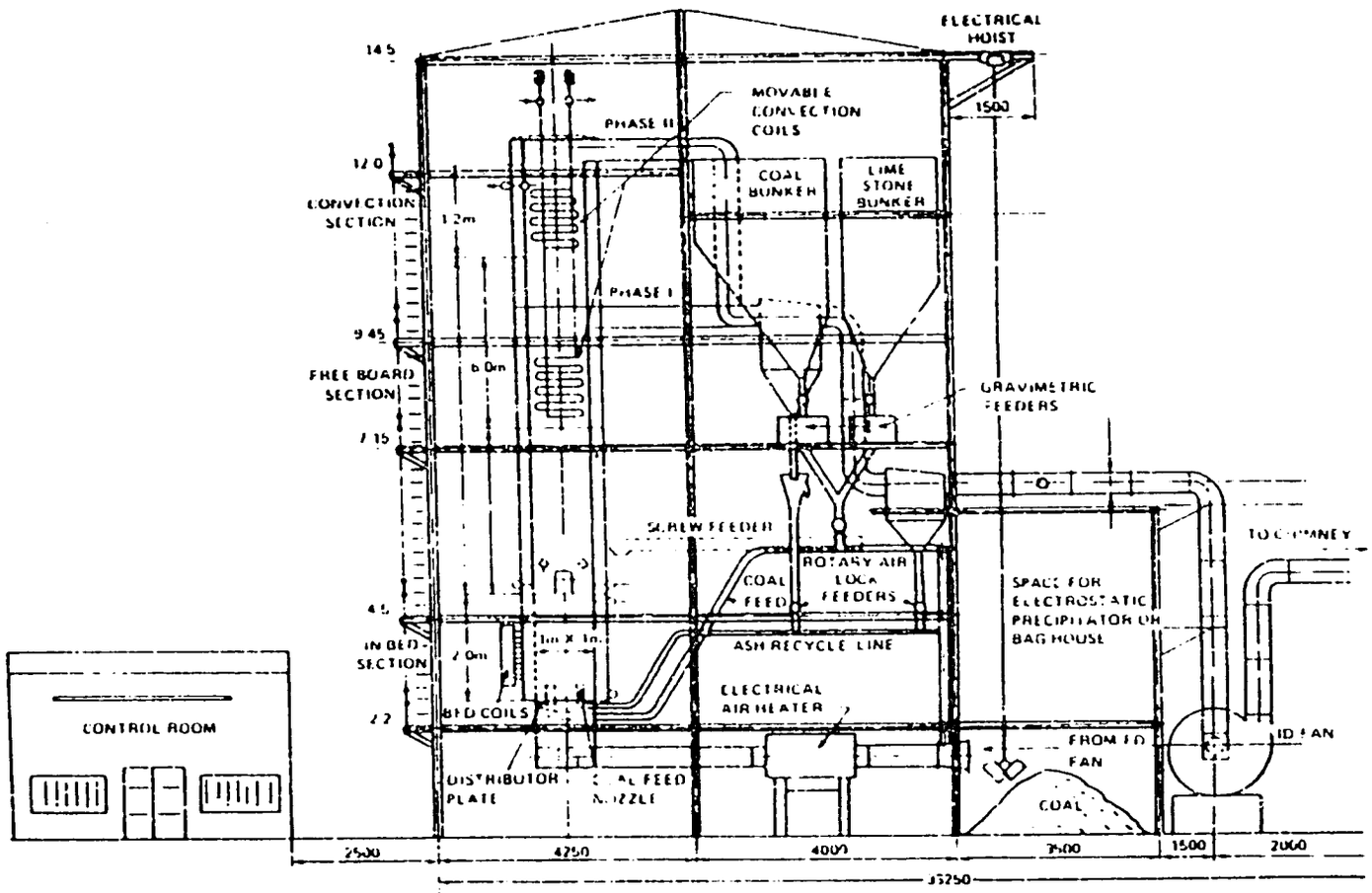

Figure-2

US AID/BHEL FLUIDIZED BED COMBUSTOR

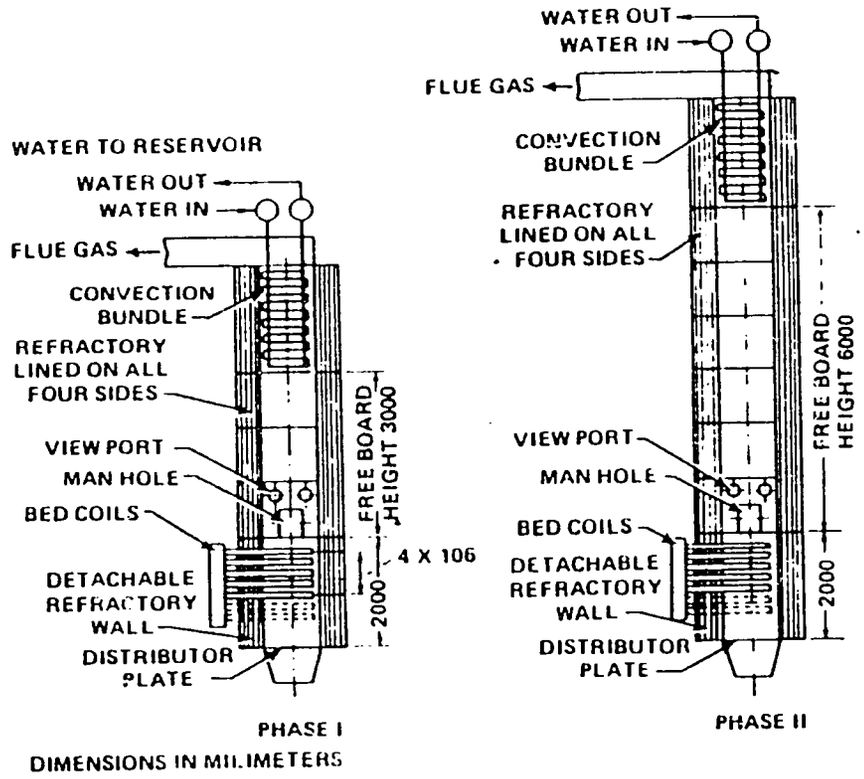

Figure-3

COAL FEED SYSTEM

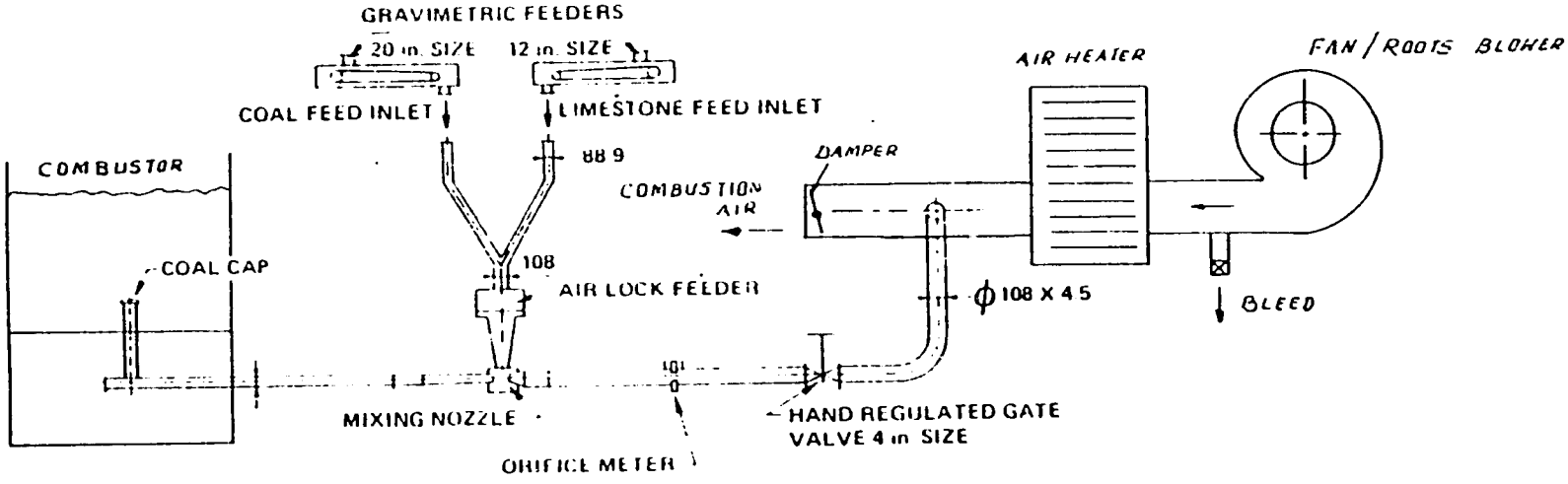

Figure-4

OVERBED FEEDING SYSTEM

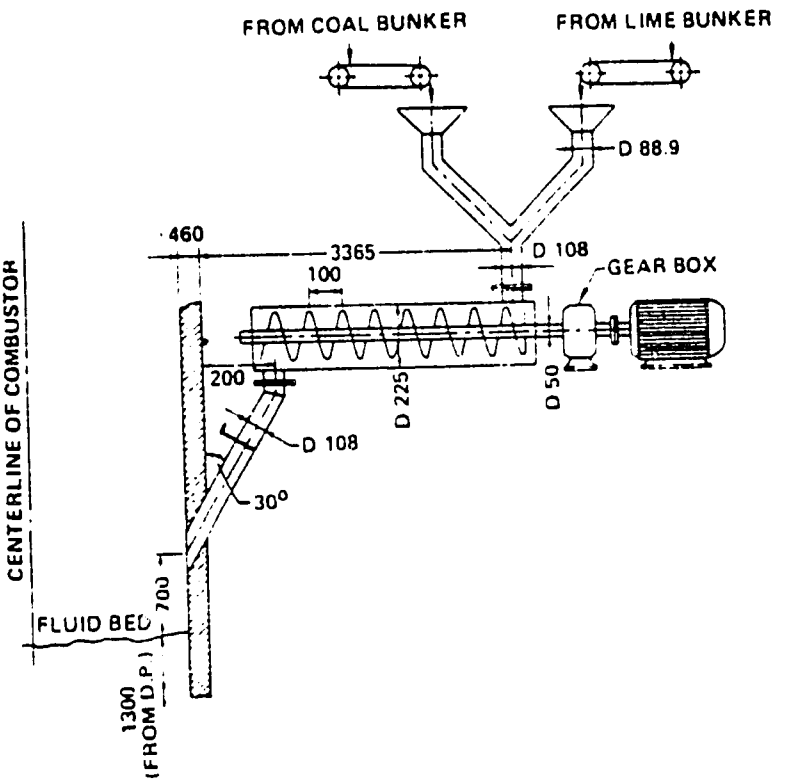

Figure-5

IV - 5

ASH RECYCLE AND ASH DISPOSAL SYSTEM

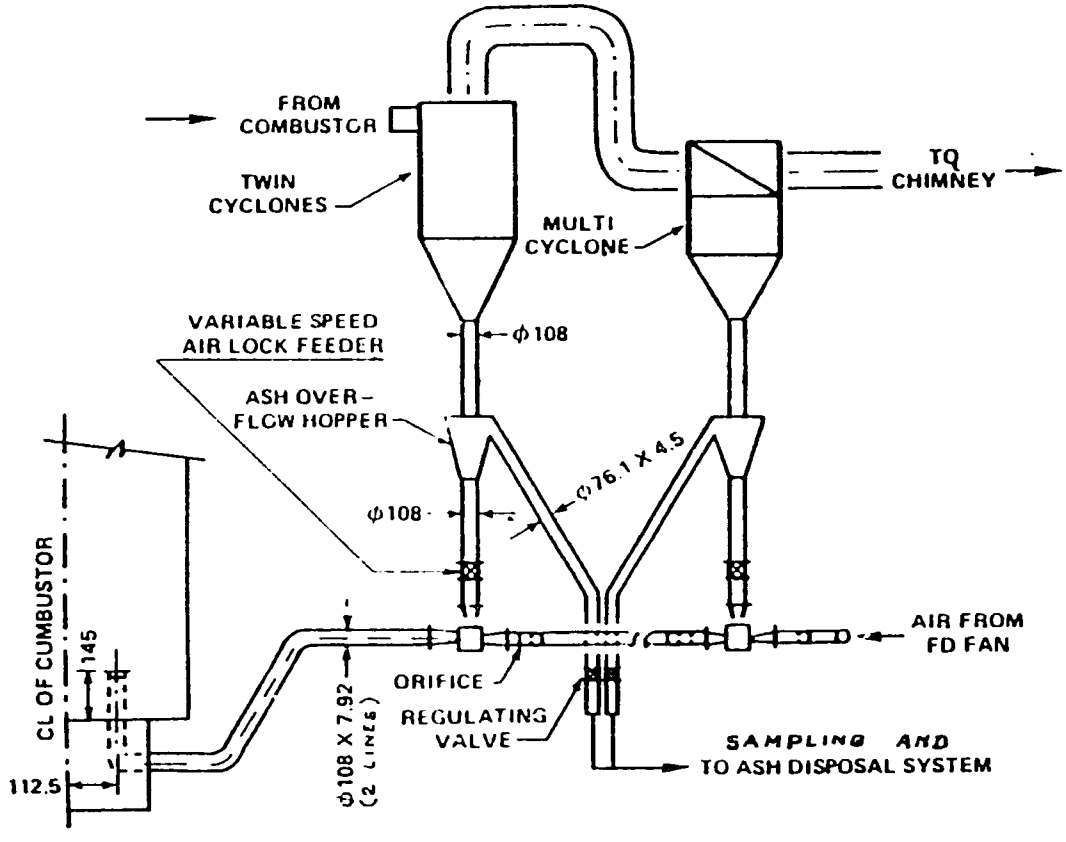

Figure-6

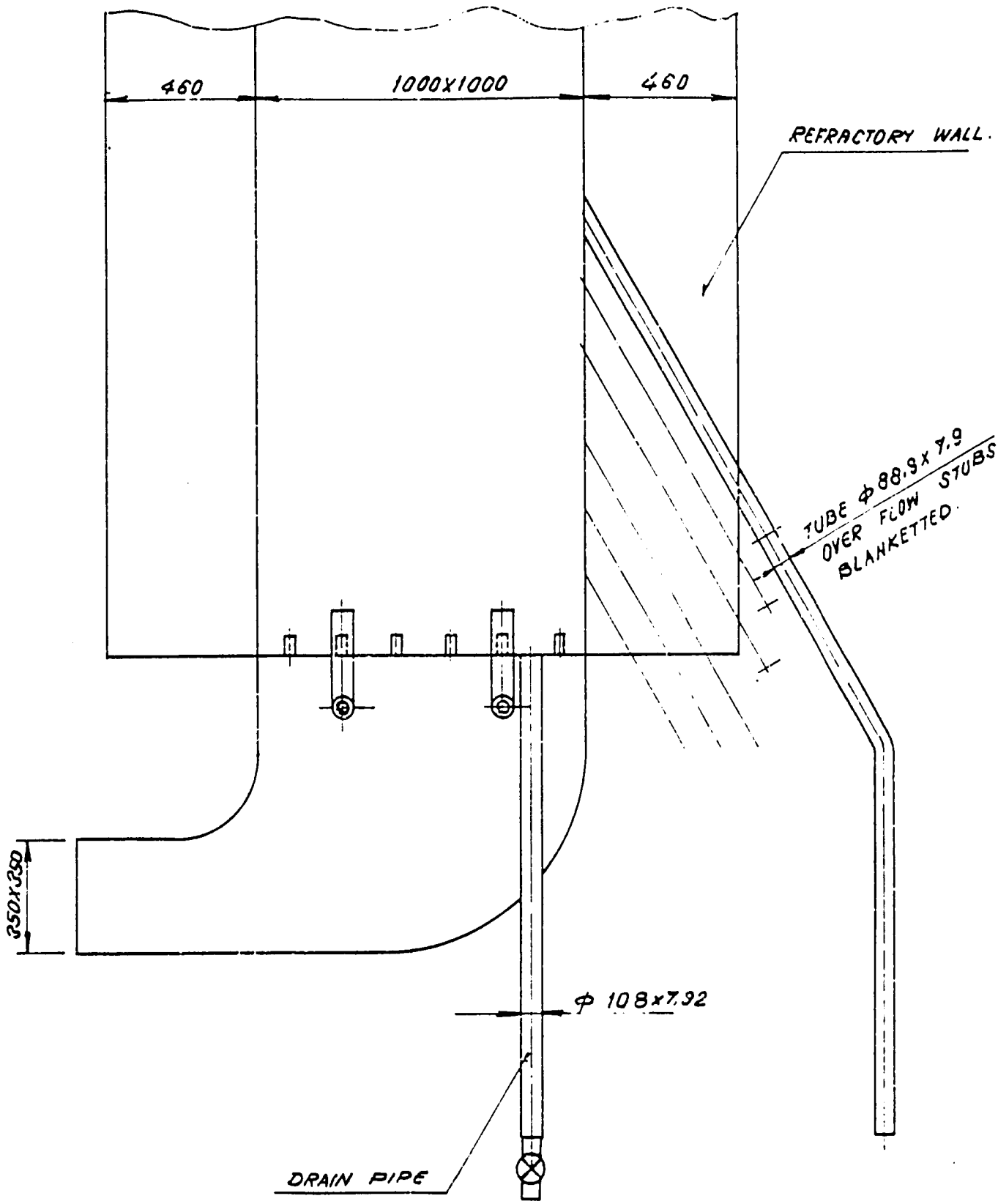

BED OVERFLOW SYSTEM

Figure-7

AIR AND FLUE GAS PATH

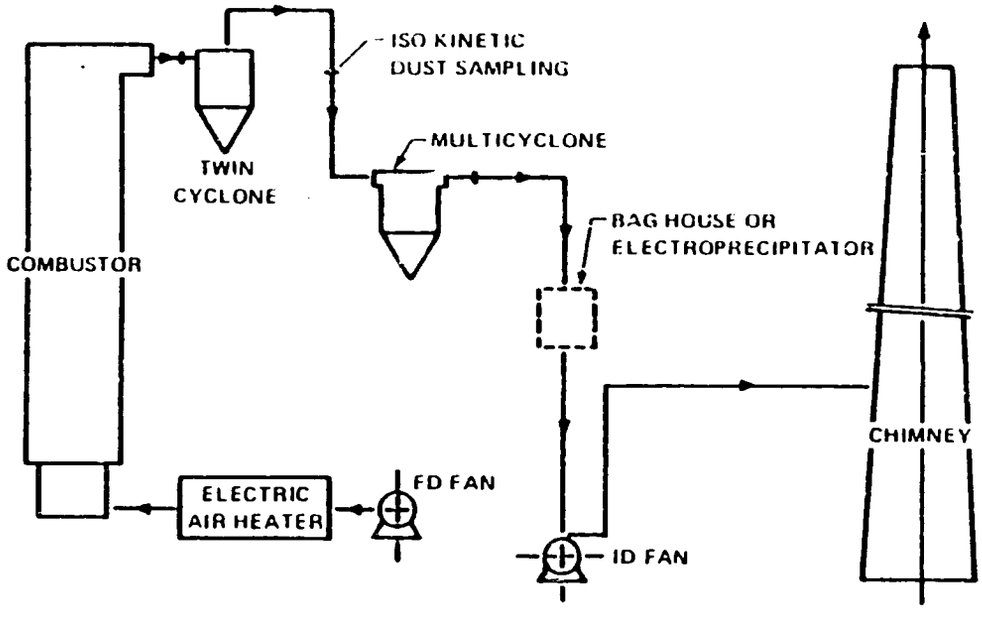

Figure-8

WATER COOLING AND EXTERNAL PIPELINES COOLING AND RECYCLING SYSTEM.

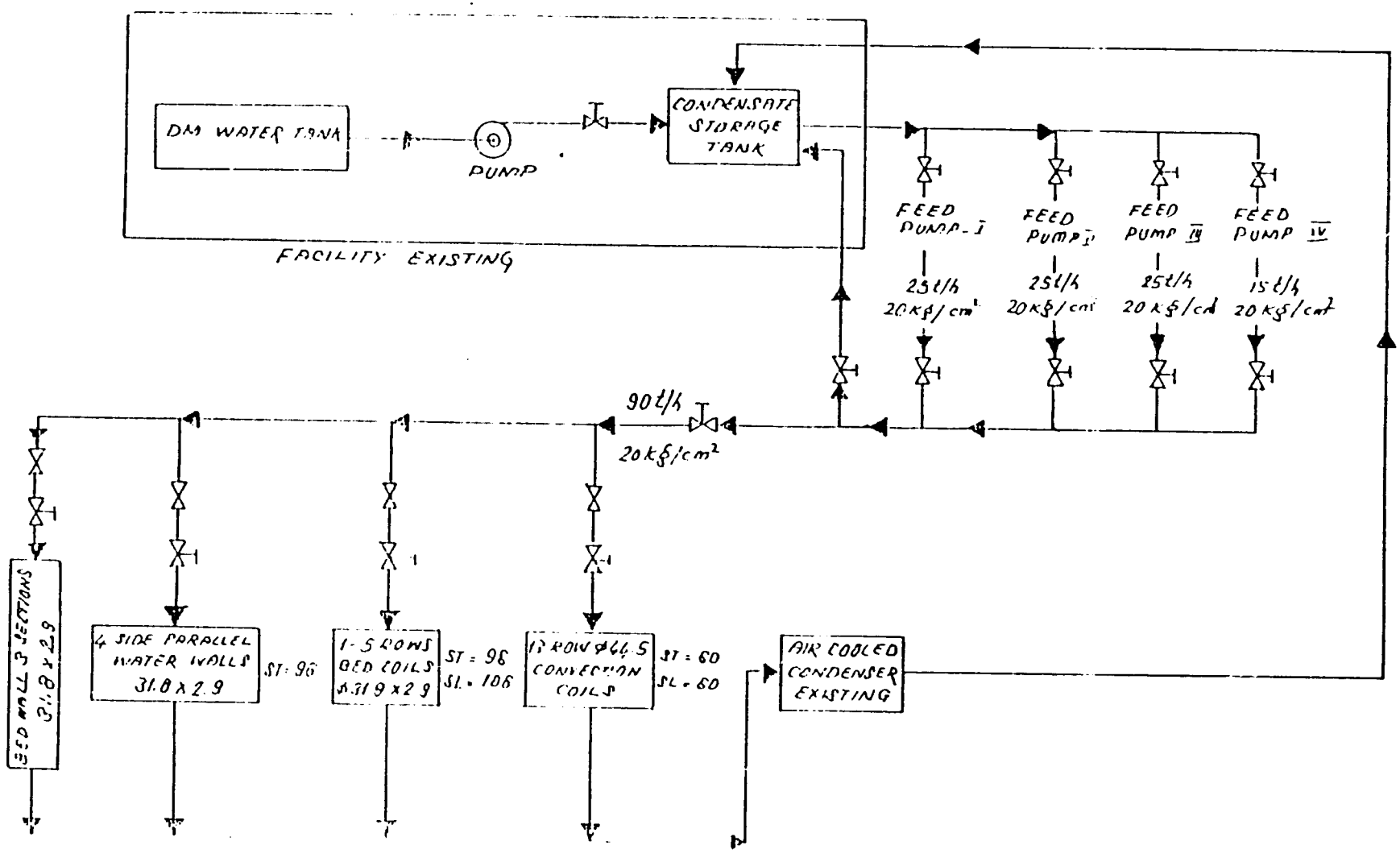

FIGURE 9

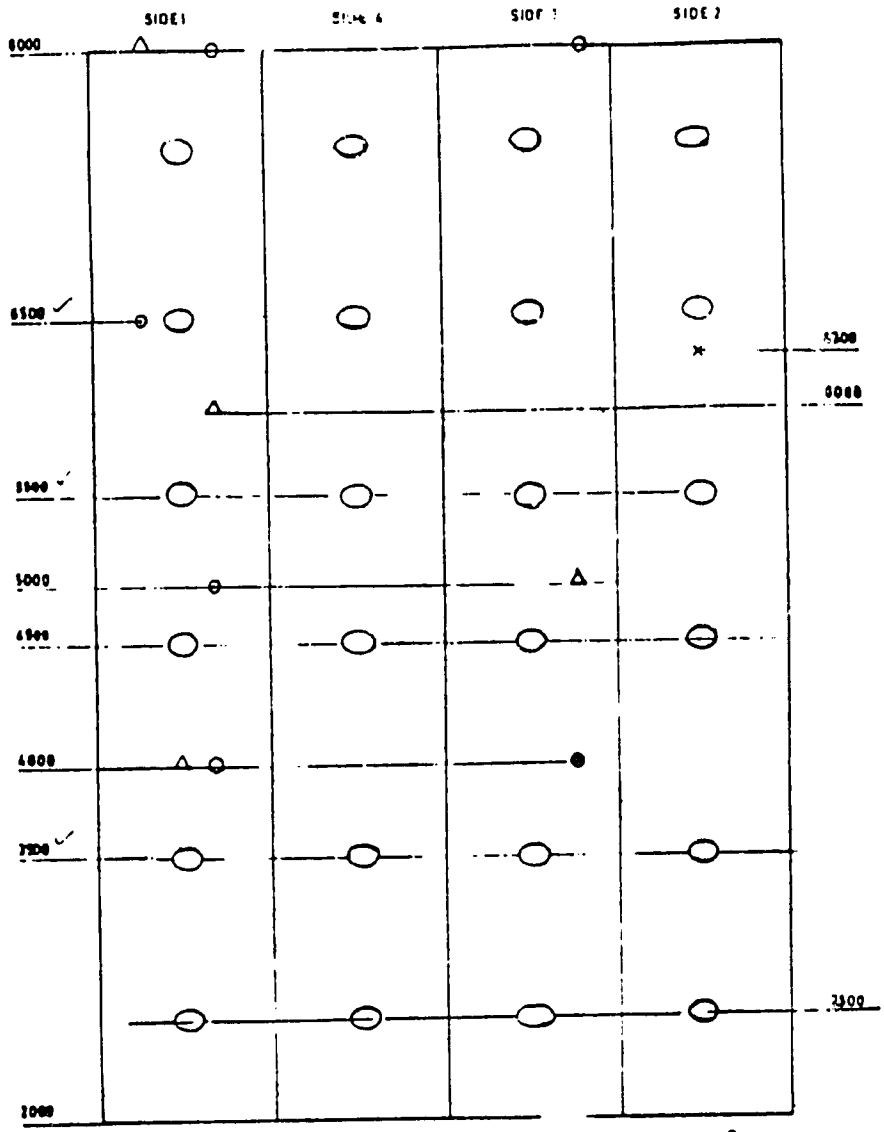

SAMPLING POINTS AND INSTRUMENTATION POINTS ON SPLASH & FREE BOARD ZONE OF THE COMBUSTOR

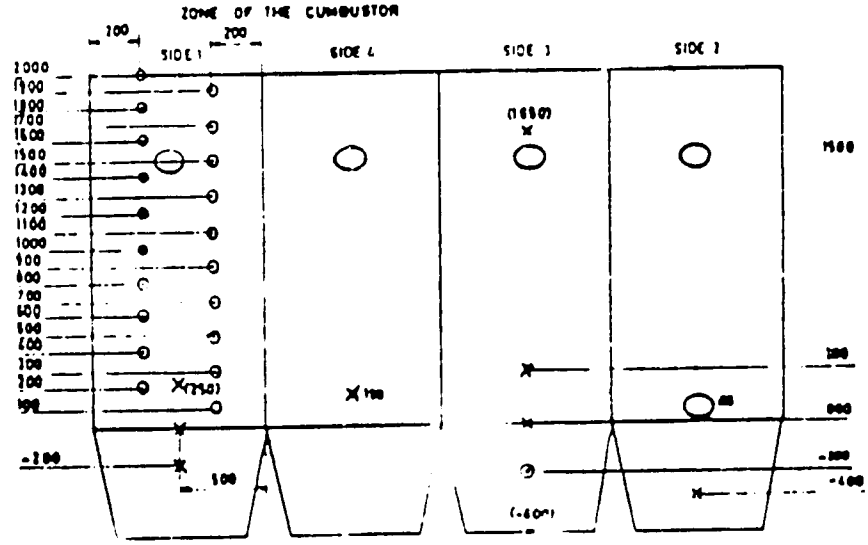

SIDE 4 - WATER WALL PANELS

SIDE (2,3) - REFRACTORY WALLS

SAMPLING POINTS AND INSTRUMENTATION POINTS IN BED ZONE OF THE COMBUSTOR

NOTE: PHASE-I WILL HAVE COMBUSTOR, HT OF SIM
PHASE-II — " — — " — HT OF BED.
HEAT FLUX METER PORT AT FREEBOARD WILL ALSO BE UTILISED FOR MEASUREMENT OF PR & TEMP
THERMO COUPLES IN THE BED ARE PROVIDED FROM THE BOTTOM

LEGEND:

X - TEMPERATURE POINT

● - PRESSURE POINT

Δ - GAS SAMPLING

O - SOLID SAMPLING

HEAT FLUX METER

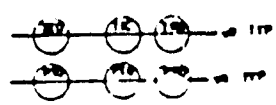

DETAILS

QUESTIONS & ANSWERS

COAL CONVERSION, FIRST DAY

Q: Why is this work being undertaken when you are commercializing fluidized bed combustors?

A: Y. P. Abbi: When we set up the 10 ton/hr facility, it was a prototype unit and we had apparently some objectives such as knowing the combustion efficiency and the heat transfer coefficient in the bed. We have data and, on the basis of that, we were able to design but that is not the end of it. It is not the most optimum design; for example, particularly in the area of freeboard on which this project is concentrating, we have kept the height of the bed based only on the state of the knowledge as of that date and presumed certain parameters. We find that these parameters are not totally right and we have to optimize in that area. If we are able to design the freeboard in the most optimum manner, then an optimum boiler design can be obtained.

Q: C. R. Cavale: We have heard about the fluidized bed

system here and, in one of the slides, you mention the retention of sulfur in the bed. Secondly, you talk about the high ash content of coal. Third, can we use any kind of coal, even lignite, or Assam coal which has a lot of sulfur? Also, how about the metallurgical aspect. Have you taken care, during the design, of these aspects?

A: Y. P. Abbi: This fluidized bed system can use any grade of coal, including lignite. It can use washery rejects and, as our Director pointed out this morning, a number of coals have been tested -- bituminous, subbituminous, even washery rejects. Regarding the metallurgical aspects, we have been closely watching the in-bed tubes where the particle emission is more, and we have come to the conclusion from the data that it will give the normal life of the tubes -- that is, up to about 30 years, particularly because the velocity of impingement is low though the impingement rate is high. In fact, in all the boilers which have operated commercially
we have found no problems of erosion in the in-bed tubes.

A: S. Chandrasekaran: Adding to what Dr. Abbi said about lignites, presently we have not added this to our program but lignite combustion has been

envisioned as a separate program with USAID for the future. For example, in the US, North Dakota lignite has high sodium which has special problems such as agglomeration, so these aspects are to be studied in detail and hence have been identified as a separate program.

A: R. Vasudevan: Lignite was tested and between 98 and 99% efficiency was obtained. Sodium chloride we have not investigated, but the softness of the coal was of no consequence.

Q: M. M. Sen: Provisions exist for top and bottom feeding in the experimental test facility. Will the same size of coal be used for both feedpoints?

A: R. Krishnan: No. For overbed coal feed, our top size is much higher -- it is about an inch and a quarter. For the underbed, the top size is about 6mm or one-quarter inch.

AFBC BOILER SCALE-UP

K. M. V. Malarkkan
S. Sundararajan
G. Viswanathan
Bharat Heavy Electricals Limited
Tiruchirapalli, India

AFBC BOILER SCALE - UP

KMA MALARKKAN, S SUNDARARAJAN & G VISWANATHAN

1.0 INTRODUCTION

Atmospheric Fluidised Bed Combustion (AFBC) boiler technology was introduced in India a decade ago, and its unique ability to burn a wide range of fuels and low grade coals including coal washery rejects of heating value 1900 Kcal/kg in an efficient and environmentally acceptable manner accounted for its rapid development.

A large fraction of the proven coal reserves in India is of poor quality, and coal allocated to the energy sector is of an inferior variety. The quality of coal is further deteriorating over the years (Fig : 1.1) due to large scale mechanised mining. Conventionally fired boilers that were designed for a good quality coal are unable to accept this quality deterioration without sacrificing the performance and availability.

Fluidised Bed Combustion offers an excellent potential for the utilisation of poor quality coal, coal washery middlings and rejects.

Bharat Heavy Electricals Ltd. (BHEL) is actively engaged in the development of this technology and has already demonstrated commercial operation of over 14000 hours at a 12 t/h unit. A second commercial unit of 45 t/h steaming capacity commissioned in October '83 has logged over 4800 hours of operation. Contracts for the supply of a 10 MWe FBC boiler for captive power generation at a colliery (utilising washery rejects containing 67% ash), a 35 t/h FBC boiler for bagasse, a 60 t/h FBC boiler and 2 hot gas generators are underway. This paper elaborates the design philosophy developed by BHEL Tiruchy in designing a 30 MWe AFBC boiler.

2.0 GENERAL DESCRIPTION OF THE FLUIDISED BED COMBUSTION STEAM GENERATOR AND AUXILIARIES

The steam generator is of the bottom supported non-reheat, natural circulation, bi-drum atmospheric Fluidised Bed, semi-outdoor type unit, designed for firing coal. The boiler parameters have been listed in Table–2.1. The fuel analysis is given in Table 2.2.

The general arrangement of the boiler and auxiliaries will be as shown in the layout drawing (Fig : 2.1, 2.2). The complete furnace section is of the welded wall type, arranged as a gas and pressure tight envelope. This eliminates the refractory material from the entire furnace wall section, besides providing structural rigidity for the unit. The steam and water drum are conservatively designed and the bank tubes connect both the drums.

Part of the evaporating heating surface is located within the fluidised bed proper The superheated steam system is in two sections. The first stage superheater is located at the furnace outlet section, and the second stage superheater section is located within the fluidised bed proper to ensure the rated superheated steam temperatures. An interstage desuperheater is provided in between the two stages of superheater, to control the final steam temperature from the unit. The boiler is provided with a bare tube economiser fabricated from plain seamless steel tubes. The Economiser will be arranged after the boiler bank section and enclosed by flue ducts. The boiler is provided with a tublar airpreheater as the last stage of heat recovery.

The coal feeding system consists of rotary (Fig : 2.3) air lock feeders, feed piping through which the crushed coal is pnuematically transported and fed to the fluidised bed.

The main boiler is of the bottom supported type and requires simple concrete piers for support. The boiler is provided with one forced draft fan for supplying the required air for fluidised combustion, and one primary air fan for transporting the crushed coal to the fluidised bed. The boiler is equipped with two radial ID fans arranged after the dust collecting system. An electrostatic precipitator is located before the ID fans to collect the fly ash from the flue gas.

3.0 BOILER PRESSURE PARTS SYSTEM

The details of the boiler pressure parts system include :

3.1 Economiser system.

3.2 Circulation system including steam and water drums, boiler bank, downcomers, water walls and riser systems.

3.3 Superheater systems.

Spray water control system for superheater desuperheater.

3.1 Economiser System

The economiser system (Fig : 3.1) draws the feed water through the feed pipes to the economiser inlet header. The economiser is located in a gas duct after the boiler bank. It has a continuous loop, plain tube, drainable horizontal, in-line arrangement. The feed water after it is heated in the economiser leaves the economiser outlet header to the drum.

3.2 Circulation System (Fig: 3.2)

The hot feed water from the economiser is discharged into the steam drum below the water level where it mixes with the recirculated water. The mixed water flows through the comparatively cooler bank tubes to the lower drum. In addition the outermost boiler bank side wall tubes are specifically designed as down comer sections to ensure adequate water flow to the lower water drum. In the boiler bank section the front rows of bank tubes (which are comparatively hotter) act as riser tubes and the rear rows of tubes act as downcomer tubes, thus forming a circulation system within the boiler bank system. The water from the water drum flows to the water wall system lower headers, which act as the inlet to the furnace water wall tubes. As the water rises up through the water wall/bed evaporator tubes it gets converted partially into steam. The water steam mixture, from the water wall top headers flow back to the drum, through the riser tubes, where the drum internals separate the steam and water; the saturated steam flows to the superheater section and the water flows back into the circulation system.

3.3 Superheater System (Fig 3.3)

The superheater system provided will include a first stage superheater located at the furnace outlet, a second stage immersed in the fluidised bed and a desuperheating system in between the two stages for controlling the final superheat steam temperature.

The convection superheater located at the furnace outlet will be a spaced, continuous loop, plain tubular type and would be hung from the furnace top.

A second stage superheater is located within the fluidised bed in three main segments. The start up segment has no superheater immersed in it. For controlling the final superheated steam temperature at the rated value, over the control range of the boiler, a spray type desuperheater is provided in the steam connecting link between the two stages of superheat. This interstage desuperheater will be of spray type.

4.0 FLUIDISED BED ARRANGEMENT

4.1 Design Parameters :

Based on the operating experience the following basic parameters were adopted for the design of the AFBC boilers.

Superficial fluidisation velocity	:	2 to 3 m.s
Average bed temperature	:	850°C
Excess air (on fuel bed)	:	10%
Combustion above bed (as a % of Heat input)	:	10%
Average bed particle diameter	:	0.8 mm

The thermal design of two alternate configurations a box and a bank type were made. The bi-drum bank type design was selected as its height is considerably smaller than that of the box arrangement and consequently effected substantial material savings.

4.2 Bed Surface Arrangement

The fluidised bed is arranged as a single bed. The bed comprises of three main bed sections in which the superheater surface and evaporator surface are immersed, and a start-up bed which has three sections having only the evaporator surface immersed. During start-up either of the end segments of the start up bed is initially actuated. Adjacent sections of the start up bed are then activated, and brought into service by feeding air and fuel. After

sufficient steam flow has been established by the immersed evaporator sections of the start up bed, the main beds are actuated after ensuring the inbed superheater surfaces are cooled by the steam already generated.

4.3 Wind box Arrangement

The wind box is divided into six compartments three smaller compartments for start-up and three main compartments. Air flow meters are provided to monitor and control the air flow through bed sections. Provisions are made in the air box for the coal feed pipes and the bottom ash discharge system to transverse through. The wind box is supported on the water walls.

4.4 Distributor Plate Arrangement

In the first generation design BHEL adopted a multiorifice type distributor. Eventhough the fluidisation performance was good, the long term reliability after many start-ups was not very satisfactory. After testing several types of air distributors in a test rig specially meant for this purpose, BHEL has evolved a nozzle type distributor and optimised the design with suitable material of construction, the pitch of the nozzles, nozzle height, hole size etc. With this design it has been possible to limit the distributor plate metal temperature very close to the inlet air temperature. This eliminates problems of overheating, high differential temperature and consequent warping of the plate. The distributor plate load is supported on the water walls. The design of the distributor plate includes an effective seal to the enclosure wall to prevent air bypass around the perimeter of the bed, and yet accomodate the differential expansion caused by the temperature extremes that the plate is subjected to. The nozzle type design protects the air distributor against the hot bed temperature during boiler operation, and also the thermal shock that the distributor would be subjected to during a unit trip, FD fan failure, or load reduction and consequent slumping when the hot bed lands on the air distributor.

5.0 COAL FEED SYSTEM

The coal feed system draws the crushed coal of size 0 to 6 mm from the crushed coal bunker by gravity on to the rotary air lock feeders that help to feed coal against pressure. The coal discharged from the feeder is transported pneumatically to the fluidised bed through steel pipes. The air required for transportation of the coal is drawn from the forced draught fan and the pressure is boosted in the primary air fan before it is supplied to the air headers. Control valves on the headers regulate air flow through coal/air pipes. The fuel is then pneumatically conveyed to the coal splitter where the fuel is distributed and fed into the fluidised bed by underbed feed lines. Individual air headers are provided for each compartment with necessary air measuring and control devices for shut off if required. The rotary air lock coal feeder is a volumetric type of feeder which helps feed coal against pressure, by effective sealing. A dynodrive mechanism which controls the eddy current flow helps regulating the speed of the rotary air lock feeder and hence the coal flow into the air fuel lines. Each start-up compartment is provided with one such coal feeder with line splitters while each main bed section has two coal feeders with line splitters. Adequate reserves have been built in the capacity of the coal feeders so as to maintain boiler load even while a few of the feeders are out of service. Coal/air pipe bends are adequately lined to prevent erosion.

6.0 BED ASH LET DOWN SYSTEM

The bad ash let down system maintains the level of the fluidised bed which would otherwise swell warranting a boiler shut down. It also helps to drain the higher size material that do not fluidise or to drain the entire bed in case of an emergency.

6.1 Ash Overflow System

A major portion of the ash brought into the bed by the coal gets elutriated with the flue gas. However the recycled fly ash and the higher size ash that is retained needs to be drained to maintain the bed level. Openings provided on the water walls, of required size at the top of the bed that help to drain this material by gravity. Submerged ash conveyors carry this quenched ash to the bed ash silo.

6.2 Under Bed Drain System

The under bed drain system is essentially utilised to drain out the larger size fraction of

the bed material that do not fluidise and settle to the bottom of the bed causing defluidisation to set in. An air-lock rotary valve which is motor operated and water cooled to handle the hot ash, is provided at the outlet of the under bed drain pipe. The under bed drain pipe is sufficiently sized to drain of the entire mass of bed in case of emergency.

7.0 DRAFT SYSTEM

The AFBC boiler has a balanced draft system with the forced draft (FD) fan supplying the air for combustion and the Induced draft (ID) fans sucking the hot gases out to maintain near atmospheric pressure in the combustion chamber. The Primary Air (PA) fan boosts a portion of the air leaving the FD fan and this air is utilised to transport the coal to the fluidised bed.

8.0 TUBULAR AIR HEATER (Fig. 8.1)

The boiler will be equipped with a tubular air heater, with gas flow through the tubes and air flow outside the tubes. The air heater will be supported on necessary steel work and will be complete with all air/gas ducting, insulation and outer casing. A refractory lining is provided at entry and the AH tubes to prevent erosion of the AH tubes.

9.0 DUST COLLECTING SYSTEM

An electrostatic precipitator is located after the tubular airheater and a head of the ID fans to collect the ash from the flue gases before it leaves the stack. A four field EP is provided to dedust the flue gases. The EP is sized for an outlet dust emission of 250 mg/Nm^3.

10.0 CONTROLS AND INSTRUMENTATION, ELECTRICAL FOR FLUIDISED BED COMBUSTION BOILERS

The Instrumentation and controls for the boiler are generally based on the pneumatic system of measurement and control. To carry out the operation of the boiler efficiently both manual as well as automatic controls are provided. All temperature indicators are of analog type.

All remote indicating, recording and control Instruments as well as the protective annunciation systems are mounted in a cubicle type control panel located inside the control room. The essential parameters such as pressure, temperature level and flow are indicated, recorded and controlled through the instruments and controllers mounted in the panel. In addition field mounted local gauges are also provided for local indication of pressure, level and temperature wherever required.

10.1 Control System

The automatic control system provided for the boiler is designed for efficient running of the boiler. The steam temperature control loop is also designed for maintaining the temperature within the guarantee limit. The control system of the boilers can be divided under the following control loops.

1. Three element feed control

This maintains the boiler drum level constant by computing feed water flow and steam flow

2. Steam temperature control

This maintains correct temperature of outlet steam.

3. Furnace draught control

This maintains constant draught at the combustion chamber.

4. Combustion control

This maintains the steam pressure on the boiler constant by varying coal flow and air flow for optimum combustion efficiency.

11.0 CONCLUSION

This paper presents a bird's eye view of the design features adopted by BHEL for 30 MW AFBC boiler.

12.0 ACKNOWLEDGEMENT

The authors thank the management of Bharat Heavy Electricals Ltd. for granting permission to present this paper in this Seminar. Thanks are also due to all the engineers of the FBC group who have contributed directly or indirectly in the preparation of this paper.

TABLE 2.1 BOILER PARAMETERS

			100% Boiler MCR Load
Main Steam			
Flow (at Main steam stop valve)	...	t/h	150
Pressure (at Main steam stop valve)	...	$kg/cm^2(g)$	63
Temperature (at Main steam stop valve)	...	°C	496
Feed Water			
Temperature entering economiser	...	°C	210

TABLE: 2.2 FUEL ANALYSIS

COAL

PROXIMATE ANALYSIS (As fired % weight basis)		RANGE
Moisture	%	5.7—6.1
Ash	%	32—44
Volatile Matter	%	21—23
Fixed Carbon	%	28—38
Higher Heating Value	Kcal/kg	3570—4635
Coal size		Minus 6mm

ULTIMATE ANALYSIS (As fired % Weight basis)		Performance Coal	Worst Coal
Moisture	%	6.12	17.00
Ash	%	32.18	50.00
Carbon	%	51.6	23.94
Hydrogen	%	3.28	1.75
Sulphur	%	0.5	0.33
Oxygen	%	5.3	6.48
Nitrogen	%	1.02	0.50
Total	%	100.00	100.00

A 6

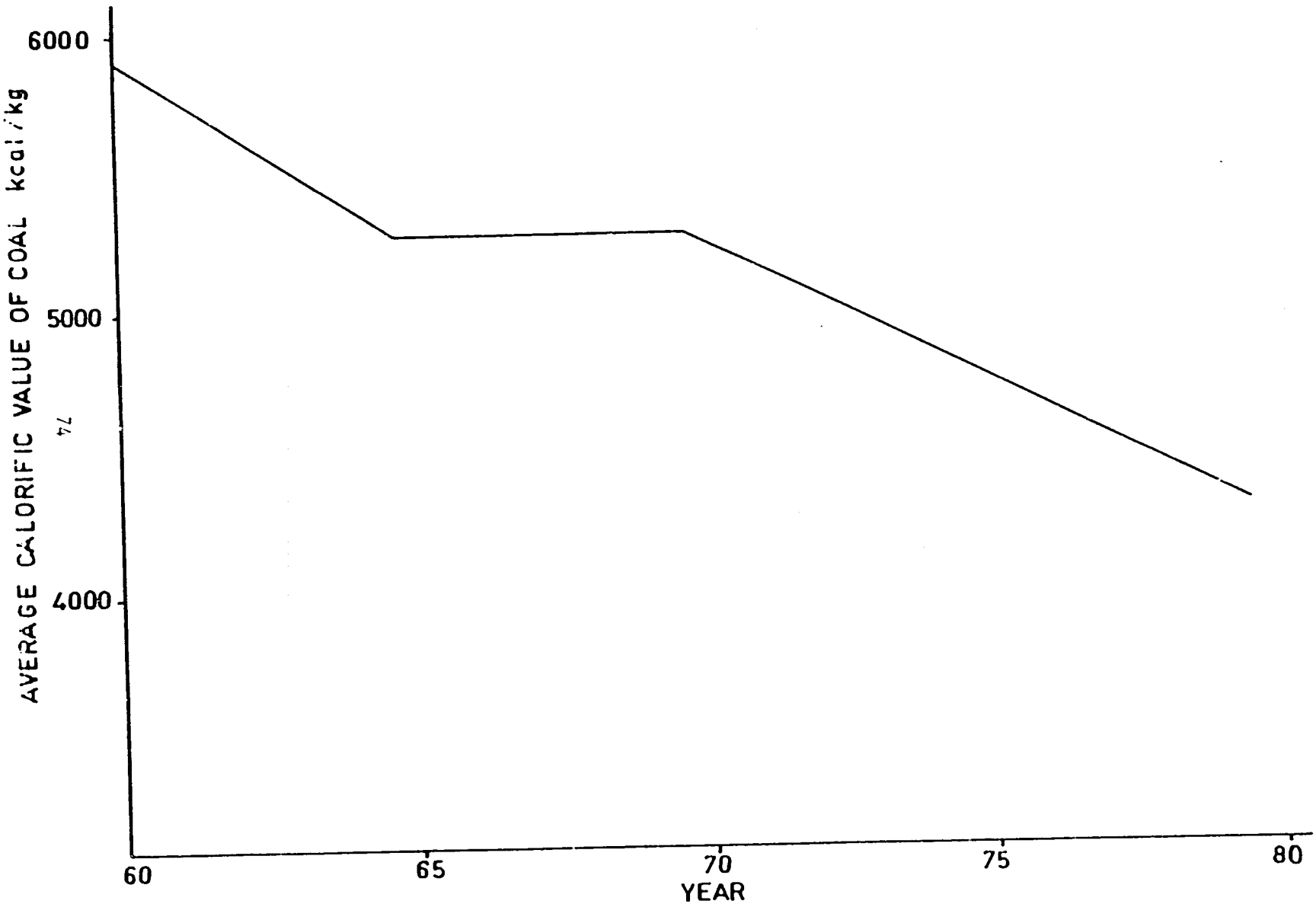

FIG-1-1 TREND IN QUALITY OF COAL SUPPLIED TO POWER STATIONS

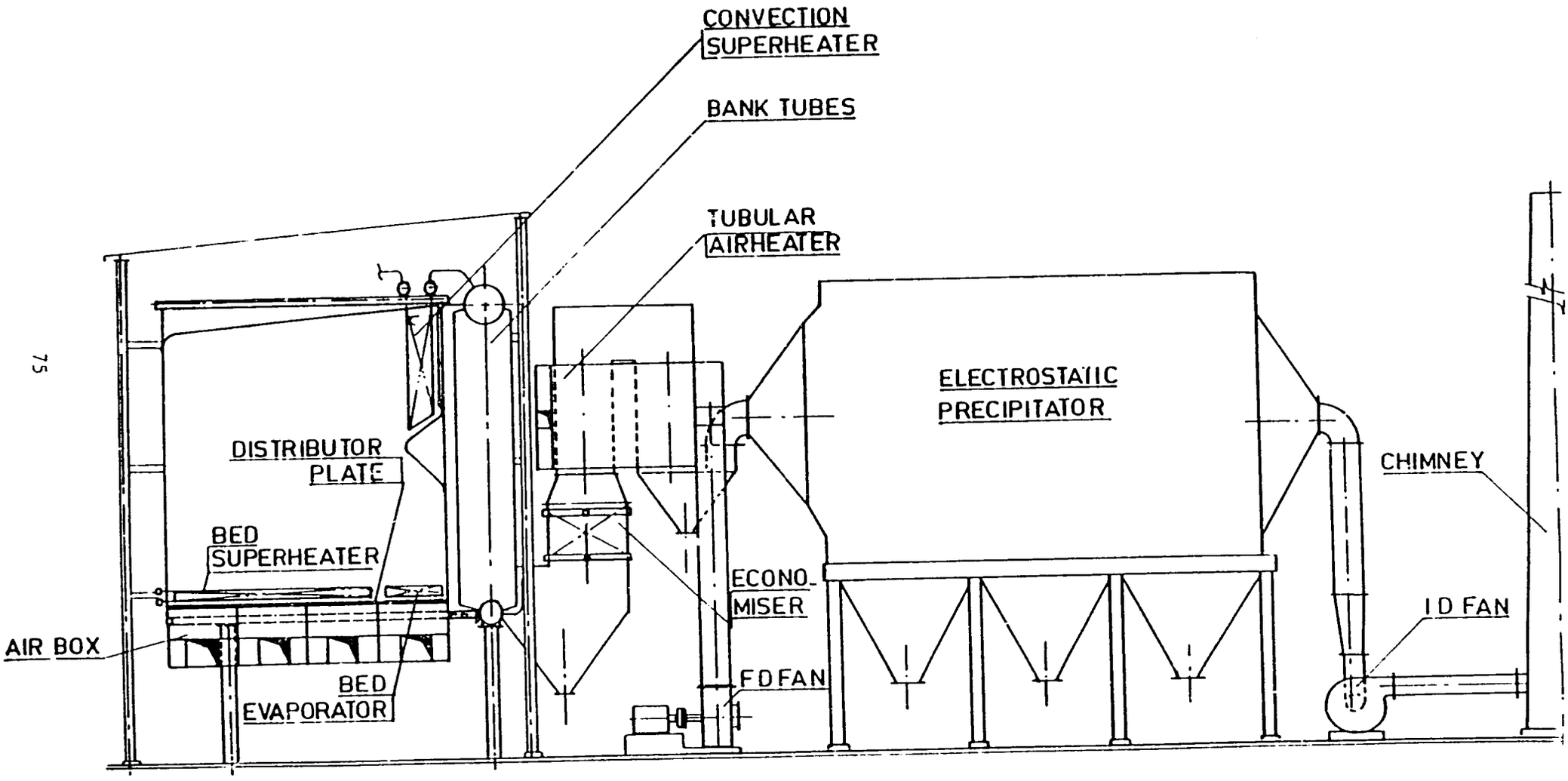

FIG 2.1 GENERAL ARRANGEMENT OF 30 MWe AFBC BOILER

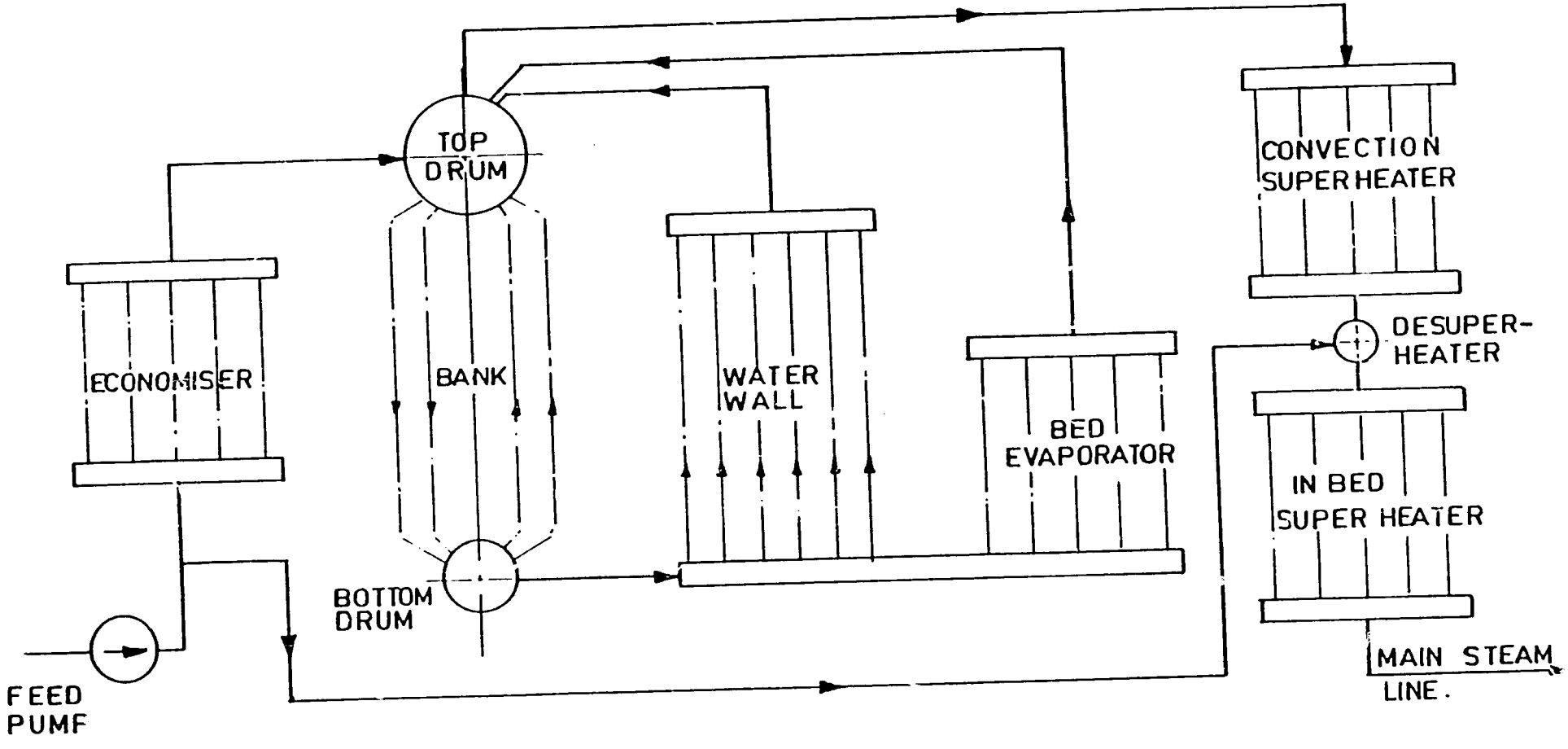

FIG-2-2 WATER AND STEAM FLOW SCHEMATIC

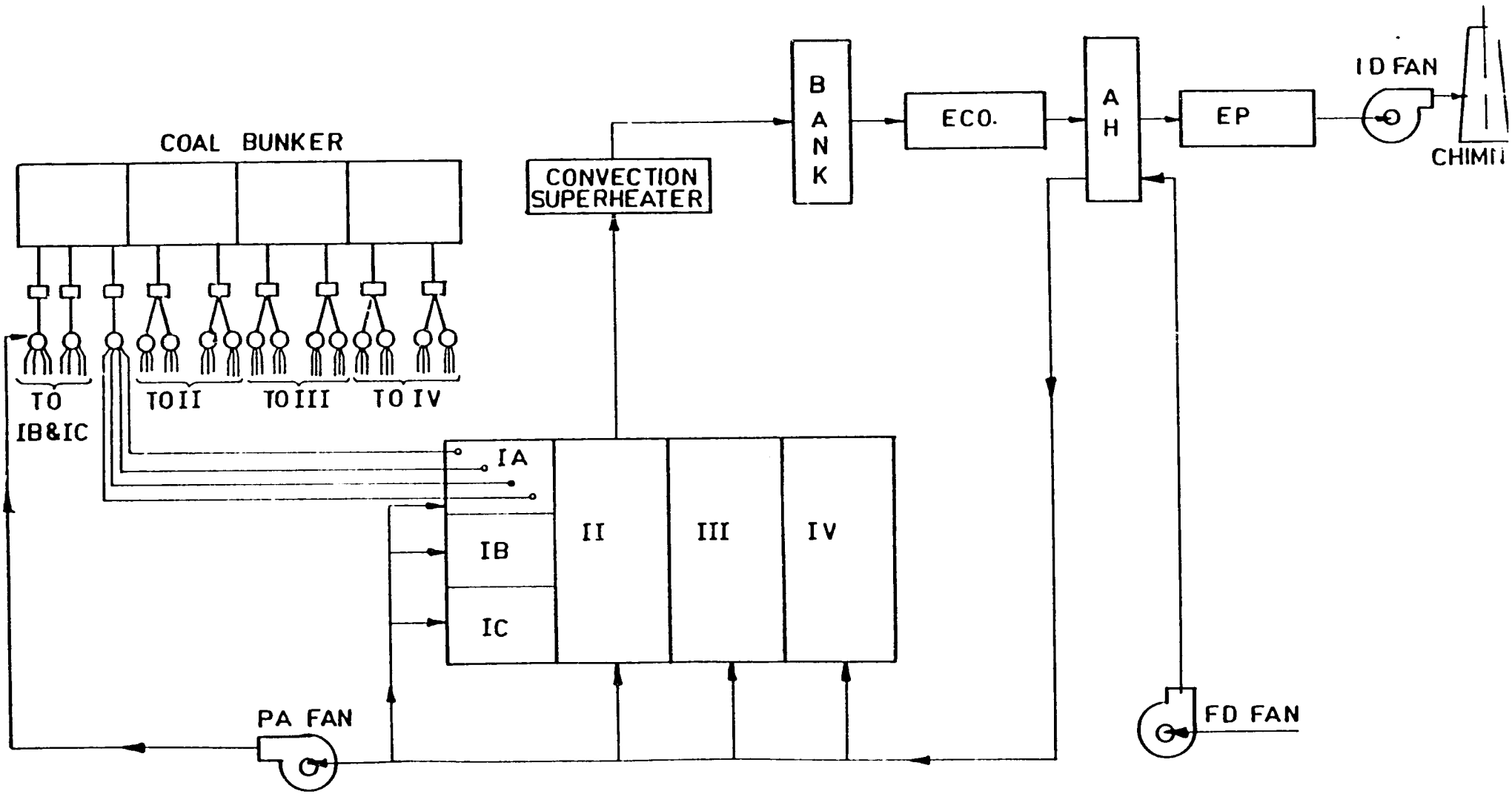

FIG-2-3 AIR AND GAS FLOW SCHEMATIC

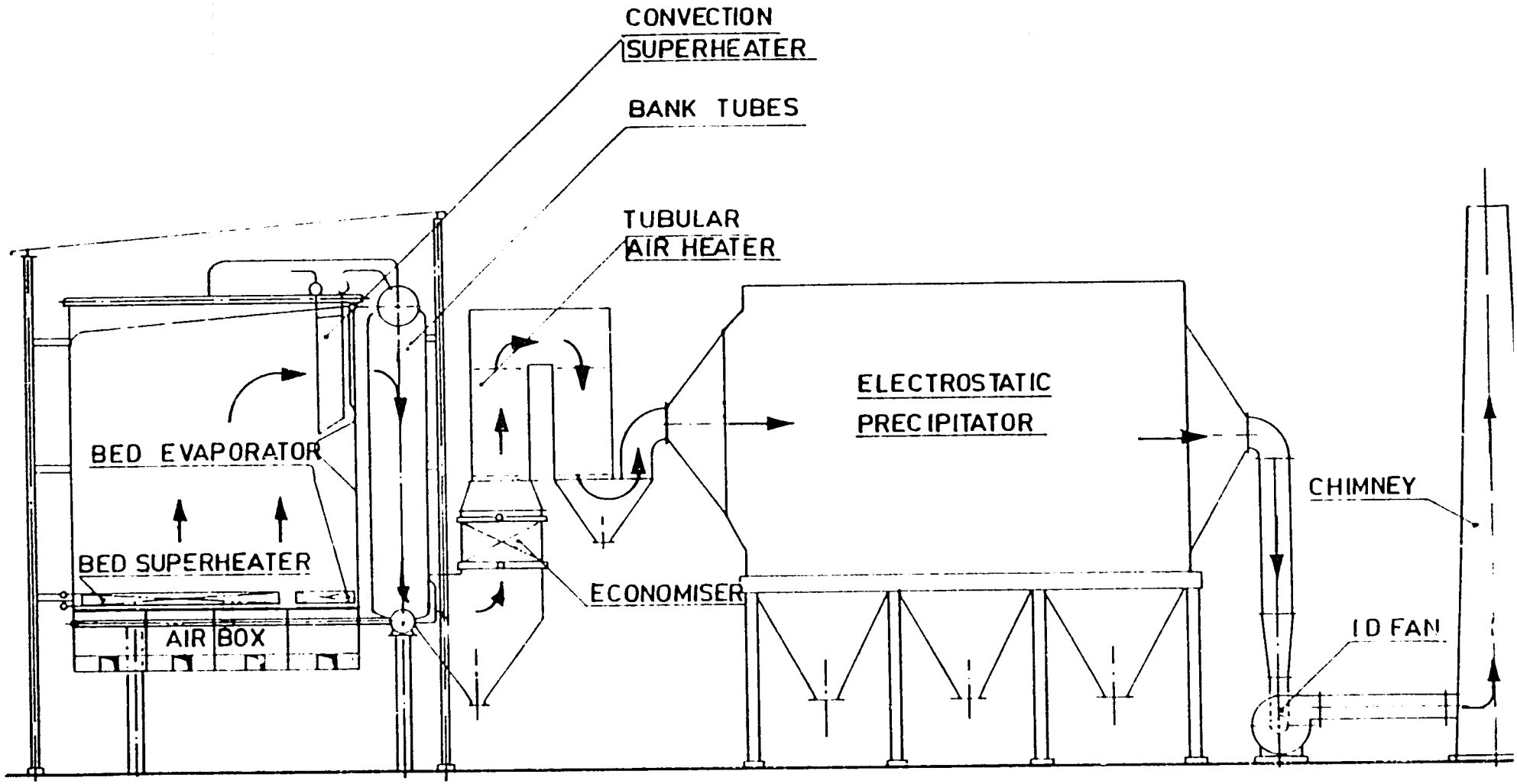

FIG-2_4 GAS DUCTING SYSTEM

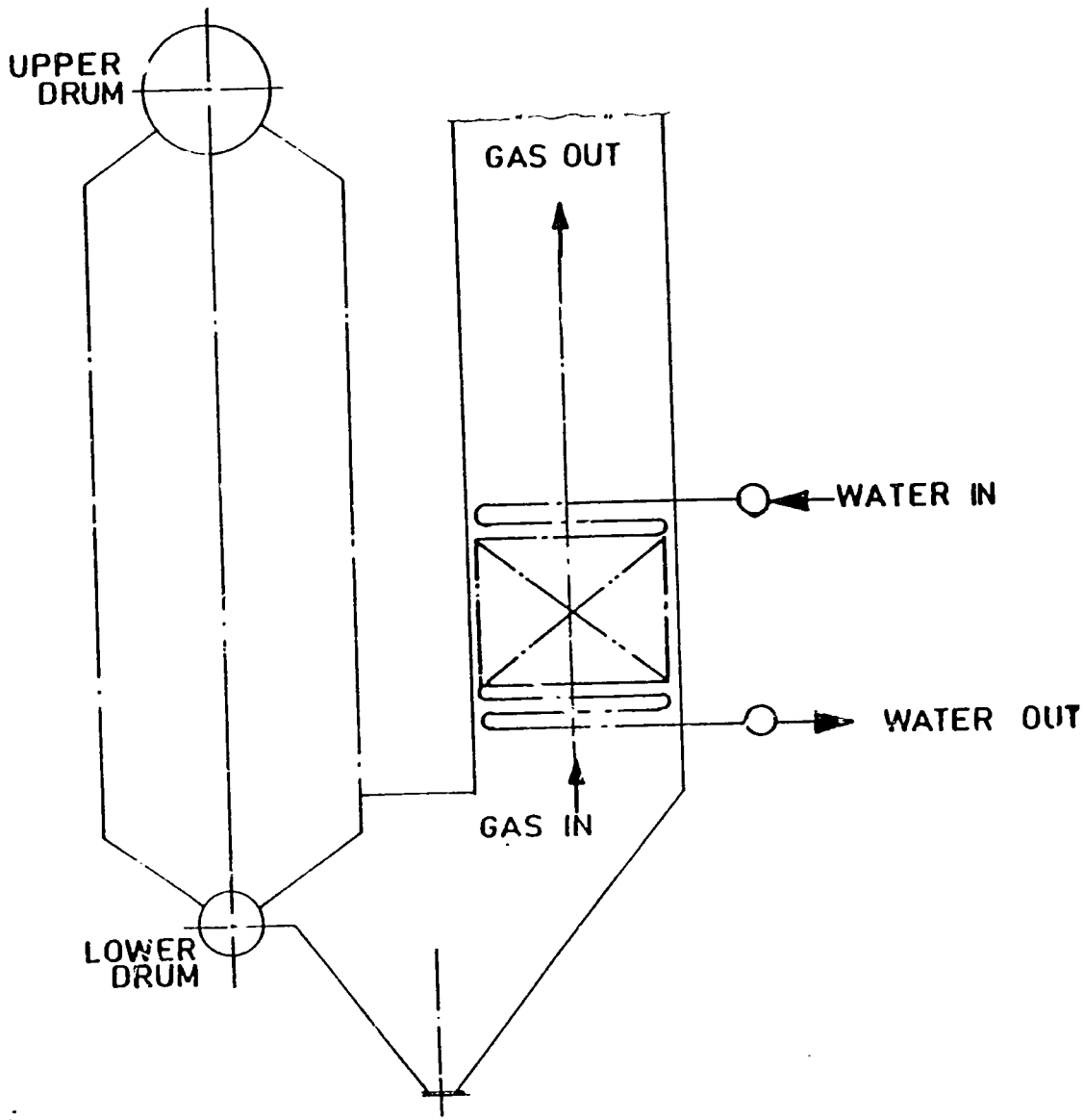

FIG 3-1 ECONOMISER SYSTEM

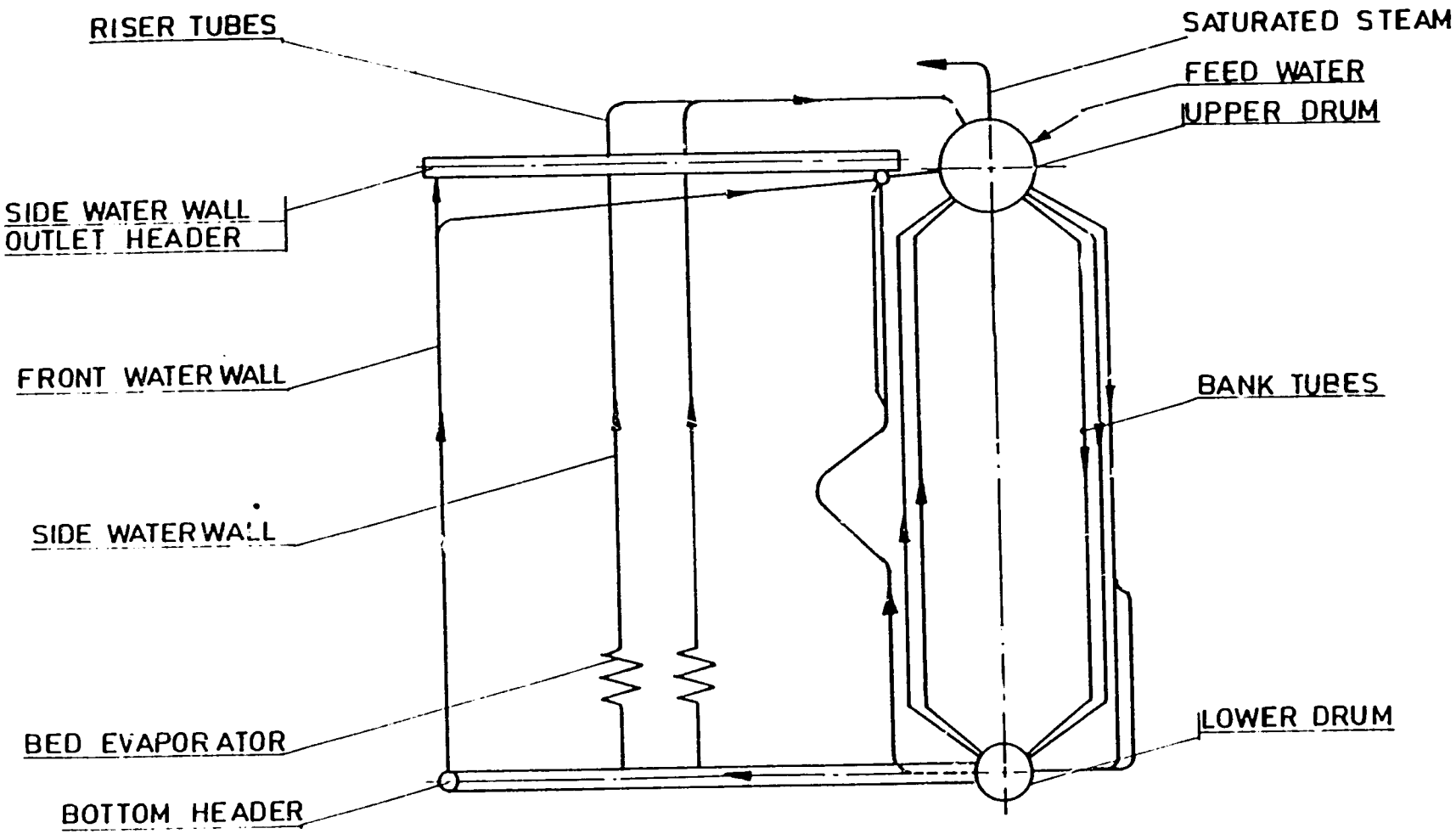

FIG. 3_2 CIRCULATION SYSTEM

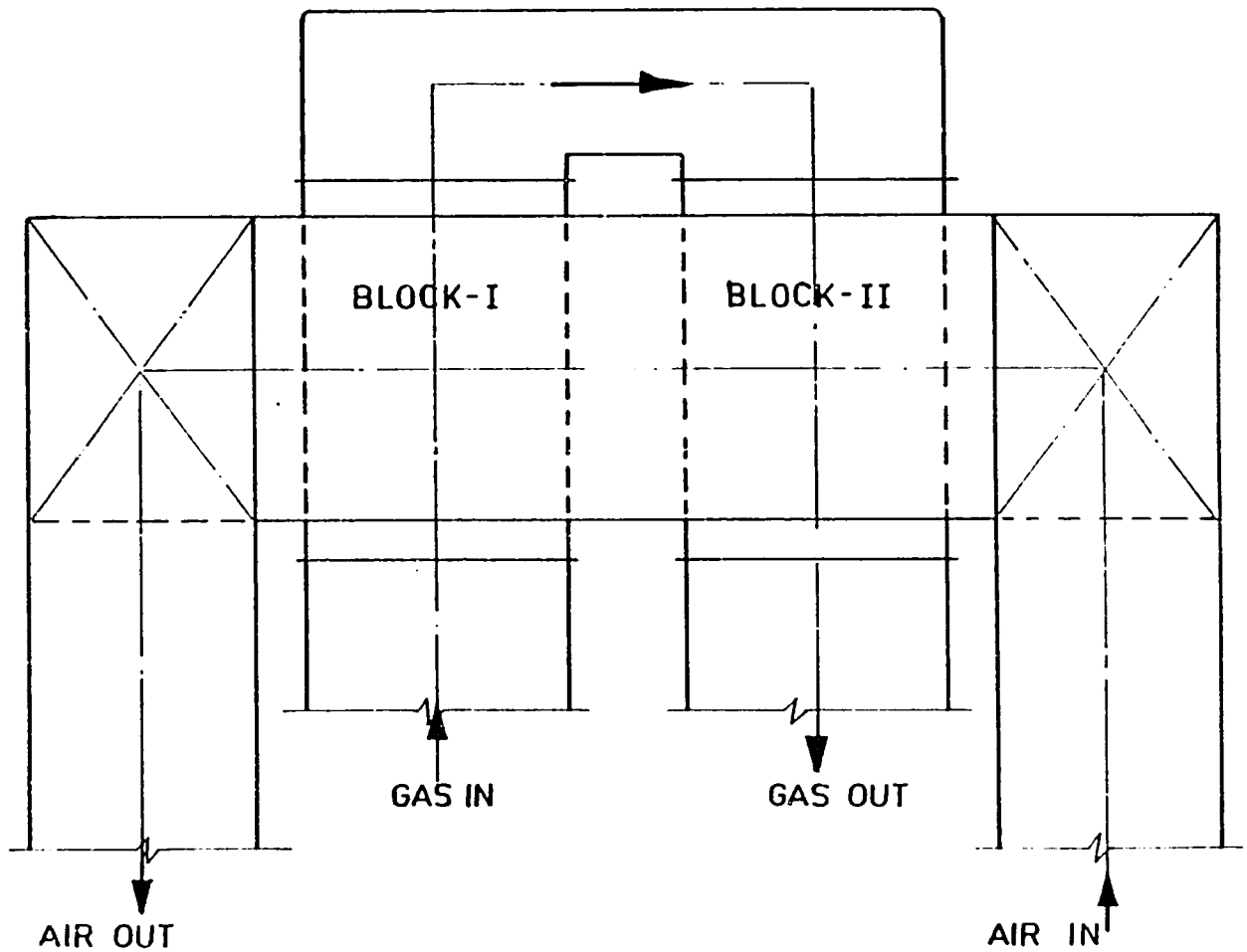

FIG-8-1 TUBULAR AIR HEATER ARRANGEMENT

QUESTIONS & ANSWERS

COMBUSTION SESSION, FIRST DAY

C: Y. P. Abbi: Thank you. Mr. Malarkkan and Mr. Sundararajan. Any questions?

Q: A. B. Datta: What is the combustion efficiency of the 10 ton/hr and the 45 ton/hr and what are the number of feedpoints in these two? Are they underbed or overbed feed? Also, since you have used fins for heat transfer what is the heat transfer coefficient for tubes with fins and without fins?

A: K. M. V. Malarkkan: The combustion efficiency achieved is of the order of 92-94% without recycle. With recycle, we could achieve more and we have planned a test with recycles.

The system of feeding is underbed and the coal feed consists of zero to 6mm size. We have planned tests but we feel that, with the overbed system and a large quantity of fines, the combustion efficiency would suffer and this has not been quantified as yet.

Regarding the feedpoints, we have about four per compartment.

A: S. Sundararajan: The tubes are all plain tubes and have no fins. The heat transfer coefficient is about 250 to 270 kcal/hr m^2 deg.C. on the gas side.

Q: Mr. Engineer: Does the AFBC system cause any pollution problems? If so, what are the remedies taken? Is there any problem with fly ash going into the chimney?

A: Y. P. Abbi: It is not in the fluidized bed combustion system -- it is the fly ash collection system. If you have to go down to 50 mgs then you have to use electrostatic precipitators. If you can tolerate 150 to 200 mgs, then you can use mechanical precipitators.

Q: Mr. Engineer: Is the installation of ESPs necessary for small fluidized boilers?

A: Y. P. Abbi: No.

COAL-WATER MIXTURE FUEL AND PRELIMINARY STUDIES ON ITS RHEOLOGICAL CHARACTERISTICS

M. Chakraborty
Central Fuel Research Institute
Dhanbad, India

COAL-WATER MIXTURE FUEL AND PRELIMINARY STUDIES ON ITS RHEOLOGICAL CHARACTERISTICS

M. Chakraborty,
Central Fuel Research Institute, Post-FRI,
PIN: 828 108, Dhanbad.
INDIA

ABSTRACT

Coal-water mixture (CWM) behaves like a fluid and can be used as a low-cost substitute for petroleum-based fuel. Major development projects have been undertaken in many countries in order to establish and commercialise the technology.

In Part I of the paper, characteristics and potential fields of application of CWM fuel and present status of the technology including Indian effort, have been briefly reviewed. The technology of CWM fuel is relatively straight-forward and does not pose environmental problem. The economic viability of CWM over residue fuel oil is also encouraging, the price differential of these two fuels being over $2.0 /GJ (Rs.20.00/GJ).

The preliminary rheological studies of CWM prepared with a few Indian coals and conducted at Pittsburgh Energy Technology Center, U.S.A., are reported in Part II. From the limited experimental results, it has been observed that the character and concentration of coals and dispersing agents used had strong effect on the viscosity. It was possible to correlate the viscosity data by means of an empirical equation available in literature. The nature of the particular coal-water dispersion was slightly thixotropic and similar to Bingham plastic. More experimental evidence are however necessary to confirm these observations.

- - -

COAL-WATER MIXTURE FUEL AND PRELIMINARY STUDIES ON ITS RHEOLOGICAL CHARACTERISTICS

M. Chakraborty
Central Fuel Research Institute, Post-FRI,
PIN: 828 108, Dhanbad,
INDIA.

INTRODUCTION

Coal-water mixture (CWM) fuel is essentially prepared by dispersing finely ground coal in water. It is distinctly different from coarse and dilute slurry used for hydraulic transport of coal. The pipeline transportation slurry generally contains around 50 per cent coal and dewatering, drying and further size reduction are usually necessary prior to its combustion. Concentration of pulverised coal (having average particle size below 50 microns) in CWM may be between 60 - 80 per cent depending on method of preparation and type of coal, and can be directly used in boilers and furnaces like fluid fuel.

In Part-I of this paper, the general characteristics as well as present status of CWM technology including its economic viability are briefly reviewed. The preliminary rheological studies of CWM prepared with a few typical Indian coals conducted at Pittsburgh Energy Technology Center, USA, during the visit of the author there in March - April, 1984 are reported in Part-I

PART - I

CHARACTERISTICS AND POTENTIALS OF CWM FUEL

CWM fuel behaves like a fluid and can be stored, pumped, transported, atomised and burned with almost all major advantages of fluid fuel. If prepared with demineralised coal, CWM fuel would be more homogeneous, have higher calorific value and physico-chemical properties reasonably close to that of residual fuel oil. Demineralisation of coal and preparation of CWM fuel are therefore regarded as partner technologies.

In view of significant price advantages over mineral oil and gas, appropriately prepared CWM is a potential low-cost alternative fuel for substituting petroleum based fuel in existing oil and gas-fired furnaces and boilers with minimum modification, capital investment and gestation period.

Principal properties of CWM is shown in Table 1. For comparison, properties of residual fuel oil is also incorporated. Although the specific energy in CWM is comparatively much less, its fluid form within acceptable viscosity range virtually eliminates a major constraint in handling and wide use of coal in its normal solid state.

Moreover, development of fluid CWM fuel and system suitable for its combustion would make drying step redundant, which is one of the highby energy consuming critical operations in hydraulic transport of coal. Feeding coal in the form of concentrated mixture with water to fluidized bed combustor and pressure gasifier is also reported to have several advantages over the method of feeding in its solid form, and this technique is used in Texaco coal gasification process by Ruhrchemie AG and Ruhrkohle AG, West Germany (1). Encouraging results are also obtained by injecting CWM to blast furnace (2). The CWM fuel with beneficiated or demineralised coal would obviously have more potential and find application in many new and key areas.

It may be mentioned that water in CWM is not entirely inert in the process of combustion and gasification. NO_x emission is less and ash produced during CWM combustion is more benign (3,4 Water also tends to accelerate the combustion process. It is believed that an increase in particle reaction surface and activation occurs during ignition stage, and the steam carbon reaction become significant during combustion stage. In gasification it has been experimentally established (1) that water in the fuel causes partial saving of gasifier agent, oxygen, and an increase in specific yield of synthesis gas richer in hydrogen. These two effects as well as safer control over the coal feed, more

than compensate for the negative effect of water feed involved in slurry conveyance to the gasifier.

STATUS OF CWM FUEL TECHNOLOGY

The concept of coal-water mixture technology is not new. The work in this field was initiated in West Germany and Russia in sixties and early seventies (4). The emphasis of Russian work was on the utilisation of wastes from coal beneficiation and coke plants. CWM was also prepared from coal fines produced during mining, and transported hydraulically, and burned in cyclone furnaces and industrial boilers. In West Germany, the technical feasibility of preparing and burning a 60 : 40 coal-water mixture was established as a result of tests performed on a 56,000 lb/hr coal-designed water-tube boiler at the Stalg power plant, Killermann, Lunen. During that period, there were also trials of CWM combustion in cyclone furnace conducted in USA in order to encourage the construction of coal slurry pipeline.

It is now being increasingly realised that coal liquids from direct and indirect liquefaction and coal gas from gasification processes are so expensive that these approaches to coal conversi are not likely to find widespread commercial application for well into the foreseeable future. The process of coal-water mixture fuel is on the other hand simple, hardly needs any high-technolog and poses environmental problem. In view of this appreciation, uncertain oil supply position and international strategies, R & D work on the development of process and combustion of CWM has again assumed immense importance particularly in almost all oil importing countries. In recent years, work in this field has been initiated and is being actively pursued with high priority in Sweden, Italy, U.K., Japan, Canada and USA.

In Canada, for preparation and use of Carbogel, a CWM developed by AB Carbogel (Helsingborg, Sweden), is under way. A 4-metric ton(mt)/hr pilot plant, now being expanded to 7-m.t/hr has already produced some 3000 m.t. of CWM with washed coal

containing 1.6 per cent ash and 0.9 per cent sulphur. Tests are now being conducted on a 12.5 MWe boiler. It has been planned to move on to a larger boiler and eventually to commercialise the technology at one or several of the 100-MWe power generators (5). The present US effort with or without federal support to establish CWM is pioneering on many counts, and technology is fast nearing completion. Two highly loaded CWM fuels developed in USA are ARC-Coal and Co-Al. The ARC-Coal containing 60-75 per cent coal by weight of specific particle size distribution with a proprietory additive has been developed by Atlantic Research Corporation of Alexandria, Virginia. Co-Al mixture fuels having upto 81 per cent coal have been prepared at Alfred University. It was reported that high coal loading in the mixture was possible by proper consideration of particle size distribution and electrochemistry. General emphasis of experimental work is now mainly on the development of more specific low-cost viscosity reducers and stabilizers both to transport the mixture easily and to atomize it properly in the burner.

Tests on combustion of CWM are being conducted at Pittsburgh Energy Technology Center (of D.O.E.) in 100-hp fire-tube and 700-hp water-tube experimental boilers. In addition to evaluating the transport and handling characteristics of CWM, valuable information has been generated on boiler operation, pollutant emissions, ash deposition, corrosion and erosion of boiler tubes, and the effects of beneficiated coals on combustion performance.

The U.S. Synthetic Fuels Corporation (SFC) has made programme for two demonstration-scale tests of CWM.

INDIAN EFFORT

In India, programme for the development of CWM including its combustion system has been taken up at Central Fuel Research Institute (CFRI) and Bharat Heavy Electricals Limited (BHEL), Tiruchirapalli. CFRI is concerned with the development, characterization and standardisation of process and CWM fuels prepared with typical Indian non-coking coals with or without beneficiation. BHEL is engaged in the development of combustion

system including design of atomiser suitable for highly loaded CWM fuel. Both the projects have been identified for support under US AID.

The primary objective of CFRI's part of work is to prepare CWM fuel with minimum quantity of water maintaining the fluidity and stability within acceptable limits. The work on the preparation of CWM has already been initiated, and approach made on the principles of surface and colloid chemistry and of rheology (6).

The principal parameters are particle size-consist, nature of coal surface, and mineral matter content and its constituents. Since the nature of coal surface can not be precisely specified and is believed to be largely heterogeneous, the primary step is to induce on the coal surface uniform hydrophilic character for improving the wetting and gel forming properties which help dispersion and stabilization of coal-water mixture. With this hypothesis in view, hydrophilic agent has been prepared from coal. This coal-derived substance having polar groups is supposed to be firmly adsorbed on the coal surface. Electrical double layer developed at the solid-liquid interface, as with efficient dispersing agents, minimise the effect of natural forces of attraction among the particles to form aggregates. A free-flowing CWM fuel containing 65 per cent coal with 16 per cent ash has been prepared with this coal-derived product. The stability of the mixture is also reasonably good. The properties are being quantitatively evaluated. Attempts are also being made to further increase the coal loading by studying and optimising the effect of size consist.

The methods of grinding of coal and incorporation of dispersing agent appear to have considerable influence on the properties of CWM. A conceptual flowsheet of CWM plant based on preliminary observations of CFRI is presented in Fig.1. The salient features of the process steps are adoption of both dry and wet grinding, and incorporation of a part of the dispersing agent at wet grinding stage. The scheme is however yet to be established by means of large-scale persistent trials.

ECONOMIC VIABILITY

Since our development work on CWM is at the preliminary stage, the published information (7) on the analysis of economic viability has been reviewed here.

For a 2.5 million tonne per annum "green-fields" plant including all facilities, normal off-sites and ancilliaries, the capital outlay has been estimated at $ 108 million (1983 price). Of the total capital, 46 per cent is for preparation and 31 per cent for coal CWM handling and storage.

The main components involved in the cost of preparation and final product, CWM, are summarised in Table-2. The basis and assumptions made for the estimate are also mentioned.

The estimate has been made for CWM containing 25 per cent water, 3.2 per cent ash having heating value of 23.2 GJ/t or 5500 Kcal/kg. The cost of preparation of CWM is $ 24.68 and cost per ton of CWM including preparation, handling and transport is $ 65.3. The price differential for CWM and residual fuel oil is $2.15 /GJ. It has been stated that considering extreme parameter ranges, the cost differential may vary from $0.4 to $2.15 /GJ. This sufficient margin indicates viability of CWM fuel as an alternative substitute for petroleum based fuel oil.

It may be seen that the most critical components are capital and coal costs. These factors would be more favourable under Indian conditions, particularly if the CWM production plant is suitably integrated with one of the existing coal preparation facilities, viz., coal washery, thermal power plant (PF fired), etc. It may hence be generally inferred that cost advantage of CWM in India would be more significant.

PART II

PRELIMINARY STUDIES ON RHEOLOGY OF CWM PREPARED WITH INDIAN COALS

SIGNIFICANCE OF RHEOLOGY

Rheological property of coal-water mixture is of paramount importance as it influences the fluidity, stability and atomization. The main aim in CWM development is to minimise viscosity without affecting the stability for a particular concentration of coal.

Although no general correlation between atomised droplet size and CWM viscosity was found, it was evident that, for any one CWM, reducing its viscosity (through dilution or heating) improved atomization quality. There is however no consistant temperature - viscosity relationship; some CWM reportedly become more and other less viscous with the increase in temperature (8).

The viscosity of CWM should be less than 2000 mPa.s (cP) at 100 sec^{-1} shear rate and 25°C. Ideally the viscosity should, remain below 2000 mPa.s at all shear rates above 50 sec^{-1} irrespective of rheology (Newtonian, pseudoplastic, dilatant, Bingham plastic, etc.). It has been generally found that the nature, concentration and particle size distribution of coal, surfactants used to disperse and stabilize the mixture significantly influence the rheology.

There is hardly any published information on the rheological characteristics of concentrated coal-water mixture prepared with Indian coals and different dispersing agents. The objective of this study conducted at the Rheology Laboratory of Pittsburgh Energy Technology Center, U.S.A., was to acquire some knowledge on these aspects which are indispensible for successful preparation and industrial use of CWM fuel. This experimental work was also undertaken as an exercise for getting familiarised with the sophisticated instruments used there for rheological studies.

EXPERIMENTAL

The Indian coal samples used in the preparation of mixtures and rheological studies were from Samla and North Karanpura seams. For comparison, a few experiments were also conducted with Pittsburgh (No.8) seam and chemically demineralised Samla coal. The analysis of the coal samples are presented in Table 3. The ash content of North Karanpura is higher (35.0%) compared to that of Samla and Pittsburgh coals (14.0 & 15.0 %, respectively).

The coal samples were ground in laboratory scale dry grinding mill to particle size 97% passing through 200 mesh (75 microns). The mixture was prepared by adding measured quantity of ground coal in specified amount of ordinary water along with particular dispersing agent, in 250 ml glass jar under condition of constant stirring. The stirring was continued for 15 minutes to ensure thorough homogenization and wetting. Separate mixture was made for each experiment at a particular shear rate.

The rheological properties of mixtures were measured by means of HAAKE (Rotovisco RV3) concentric-cylinder rotational viscometer in which, as in general applicable to the instruments of this clas the couple transmitted through the fluid to the suspended rotary inner cylinder is resisted by a calibrated spring. The deflection of the spring allows determination of torque and corresponding shear stress. The flow curves in terms of torque and time are directly recorded. With the help of instrument constants, the values of shear stress (dyne/cm^2 or Pa.), Shear rate (sec^{-1}) and viscosity (cp or m Pa.s) were computed from the flow curve at particular RPM of rotor (9).

The particle size distribution was determined by the Leeds & Northrup Microtrac^R Model 7991 - 01 Particle Size Analyzer which utilizes the phenomenon of low angle, forward scattering light from a laser beam projected through the stream of particles circulated by means of the sample pump (10). The computed values of the entire size distribution along with summary data are printed on a paper tape. The particle size distribution is

computed by the instrument in 4 different manners, viz. I - cumulative graph, II- relative volume graph, III- cumulative and histogram data & IV- summary data. Typical particle size distribution obtained with North Karanpura coal sample showed that 97 per cent were below 75 microns, 85 per cent 38 microns, 76 per cent 27 micr 69 per cent 19 microns, 49 per cent 13 microns, 38 per cent 9.4 microns, 29 per cent 6.6 microns and 16 per cent 4.7 microns.

RESULTS AND DISCUSSION

The experimental work was conducted as per following scheme:

i) Effect of concentration of different coals on viscosity at shear rate 100 sec^{-1} and with almost identical particle size distribution.

ii) Effect of different dispersing agents on the viscosity of mixtures with North Karanpura coal.

iii) Effect of time on viscosity.

iv) Effect of shear rate on shear stress.

The results of the effect of concentration (weight percent on dry basis) are shown in Figure 2. It is clear from the results that the viscosity as usual increased with the increase in concentration ofe coal. The viscosity of CWM with Samla coal was slightly lower than that with North Karanpura coal. The CWM with Pittsburgh coal showed still lower viscosity. The viscosities of slurry prepared with Samla coal with or without demineralisation recorded little difference. The results suggest that there was an effect of the type of coal on viscosity. pH of the mixtures and oxygen content in coal (mentioned in the same Figure) gave an indication that these factors had some direct relation with viscosity. From these limited experimental results, it was not possible to pinpoint which property of coal was specifically responsible for this variation in viscosity. It however showed that increase in oxygen content in coal showed an increase in viscosity.

Figure 3 presents the results of the effect of CWM concentration of North Karanpura coal on viscosity with different additives as parameter. The different additives used were NaOH, 'Celex' (a concentrated solution of Magnesium Lignosulphonate, supplied by Indian Paper Pump Company, Calcutta), Lomar D (Sodium salt of an alkyl mono-naphthalene sulphonic acid, supplied by Diamond Shamrock Corporation, Morristown, NJ), Celex + NaOH, and Lomar D + NaOH. Viscosity reduction with Lomar D was highest of all the results obtained with the other additives and their combinations.

Attempt has been made to correlate the viscosity of the CWM (with Lomar D) with volume fraction of solid concentration (Φ) in terms of Φ_m, the maximum attainable solids volume fraction in the suspension by means of the following empirical (11) equation :

$$\mu_r = \left[1 + K \left(\frac{\Phi/\Phi_m}{1 - \Phi/\Phi_m} \right) \right]^2$$

where μ_r is relative viscosity, K is a constant depending on suspension. The equation was proposed by Botsaris and Astill on the basis of correlation developed by Chong, Christiansen and Baer The effective maximum solids fraction for a given particular size distribution, includes the effect of particle interactions. In order to determine this parameter, a plot $(\mu_r - 1)^{-1}$ vs Φ was made and the line was extrapolated to zero to give the value of Φ_m as per method originally employed by Frankel and Acrivos (12). The plot is shown in Figure 4 from which Φ_m is obtained for the particular suspension by extrapolation. Once Φ_m is obtained, the correlation is tested by plotting $(\mu_r^{1/2} - 1)^{-1}$ vs Φ_m/Φ which should give a straight line passing through $\Phi_m/\Phi = 1$ having a slope of I/K. The plot of the data gave a straight line suggesting reasonably good validity of the correlation for this particular coal-water suspension. The plot is shown in Figure 5.

The plot of viscosity vs time in Figure 6 demonstrates that viscosity slightly decreased with time showing the thixotropic character of the suspension.

Figure 7 represents the relationship between shear stress and shear rate. The rheogram shows that the nature of these coal-water mixtures was similar to Bingham plastic within the range of shear rate employed. More experimental evidence would however be required to confirm the rheological characteristics.

CONCLUSION

i) Development work is being pursued in many countries to establish the technology of preparation and combustion of CWM fuel

ii) CFRI has also undertaken R & D work in this field. A dispersing agent prepared from coal has been found to be effective BHEL, Tiruchirapalli, is engaged in the development of combustion system suitable for CWM fuel.

iii) CWM fuel has cost advantage over residual fuel oil, the price differential for these two fuels being over $ 2.0 /GJ.

iv) Nature and concentration of coal as well as additives had strong influence on the viscosity of CWM.

v) Viscosity of CWM prepared with North Karanpura coal could be correlated in terms of volume fraction and effective maximum solid fraction for the particular dispersion by means of an empirical equation.

vi) From the limited experimental results, it showed that CWM prepared with North Karanpura coal was slightly thixotropic and had characteristics similar to Bingham plastic.

ACKNOWLEDGEMENT

I wish to express my deep sense of gratitude to Dr. Daniel Bienstock, Project Manager, Coal and Biomass Conversion Program, Pittsburgh Energy Technology Center, who was my 'Host Coordinator' for my visit to U.S.A., under CSIR-NSF Scientists Exchange Program.

I am also grateful to Shri B. K. Mazumdar, Director, CFRI, for his support and help to undertake the study tour, and to prepare this paper.

I thank Mr. James Ekmann, Mrs. Amy C. Ekmann, Mr. Bernard Avon and Mr Dennis C. Stanko of Rheology Laboratory of PETC, who extended all kinds of assistance to conduct the experimental work.

Thanks are also due to CSIR and NSF authorities for financial support.

REFERENCES

1. Cornils, B., Richter, B., Ruprecht, P., Langhoff, J., and Duerrfeld, R., "Preparation of coal water slurries for the Texaco Gasifier", presented at the First European Conference on Coal Liquid Mixtures , Cheltenham, U.K., October 1983.

2. Schiller, B., and Ivey, R.T., "Economic and Technical Factors Governing Coal-Water Slurry use at North American Blast Furnaces", Proceedings of Sixth International Symposium on Coal Slurry Combustion and Technology , June 1984.

3. Bergman, P.D., Kirkland, L., and George, T.J., "Why Coal Slurries Stir Worldwide Interest, Part I: State-of-the Art", Coal Mining & Processing, October 1982.

4. Bienstock, D., and Foo, K.O., "History and Development of Coal-Liquid Mixtures", presented at the First European Conference on Coal Liquid Mixtures , Cheltenham, U.K., October 1983.

5. Nicholas, B., "The phase Quickens for Coal-Slurry Projects", Chemical Engineering, September 17, (1984).

6. Bhowmik, T. K., and Chakraborty, M., "Considerations for the Development of Coal-Water Mixture as an Alternative Fuel", Proceedings of First Joint USAID/GOI Workshop on Alternate Energy Resources Program , New Delhi, November 1983.

7. Siemon, J.R., "Coal-Water Mixtures as an Alternative to Heavy Fuel Oil", Proceedings of Sixth International Symposium on Coal Slurry Combustion and Technology, June 1984.

8. Roberts, G.C., "A Review of Coal-Water Mixtures as Substutites for Fuel Oil", Australian Coal Industry Research Laboratories Ltd., North Ryde, N.S.W., Report 84-I, January 1984.

9. "HAAKE Viscometers Instruction Manual, Rotovisco RV 3", HAAKE Mess - Technik GmbH U. Co., Marlsruhe, F.R.G.

10. "Operator's Manual, Microtrac[R] Model 7991 - 01 Particle Size Analyzer", Leeds & Northrup, Microtrac Division, Largo, Florida.

11. Botsaris, G.D., and Astill, K.N., "Effect of the Interaction Between Particles on the Viscosity of Coal-Water Slurries", Proceedings of Sixth International Symposium on Coal Slurry Combustion and Technology , June 1984.

12. Frankel, N.A., and Acrives, A., Chem. Eng. Sci., 22, 847 (1967).

TABLE - I

PRINCIPAL PROPERTIES OF RESIDUAL FUEL OIL, AND PROVEN CWM FUEL

		RFO	CWM
Carbon	Wt.%	87.30	75 - 81.00
Water	"	-	25.00- 30.00
Ash	"	0.04	2.00 - 10.00
Specific Energy	GJ/t	41.00	20.00 - 23.00
	Kcal/Kg	9,785.00	4567.00 - 5250.00
Density	Kg/1	1.05	1.15 - 1.20
Viscosity	cp	105	500 - 1000

TABLE - II

COST OF PREPARATION AND COST OF CWM FUEL (7)

COMPONENTS		COST	BASIS
Utilities	$/t CWM	5.20	Fixed Capital for a 2.5 M t/a plant: $ 108 million
Chemicals	"	4.50	Ash content of CWM : 3.20%
Capital Charges	"	8.64	Water " : 25.00%
Other items	"	6.34	Heating value of CWM: 23.20 GJ
Total Preparation Cost	"	24.68	
Cost of coal including prepn., and transportation of CWM.		40.62	Cost of RFO Projected for the period 1985-1990 :$5.00 /GJ Cost of coal :$45.00 /t.
Total cost of CWM	"	65.30	
	$/GJ	2.85	
	$/10^6 Kcal	10.00	
Price of RFO	$/GJ	5.00	Price differential: $2.15 /GJ

TABLE - III

ANALYSIS OF COAL SAMPLES

Proximate Analysis %	Coal Samples		
	Samla	North Karanpura	Pittsburgh
Moisture	6.00	5.90	2.43
Ash	14.00	34.70	15.07
Volatile Matter	31.30	25.50	33.11
Fixed Carbon	49.39	33.90	49.39
Calorific value Kcal/kg	6350.00		6755.00
Oxygen % (dmf)	10.5	13.5	8.0

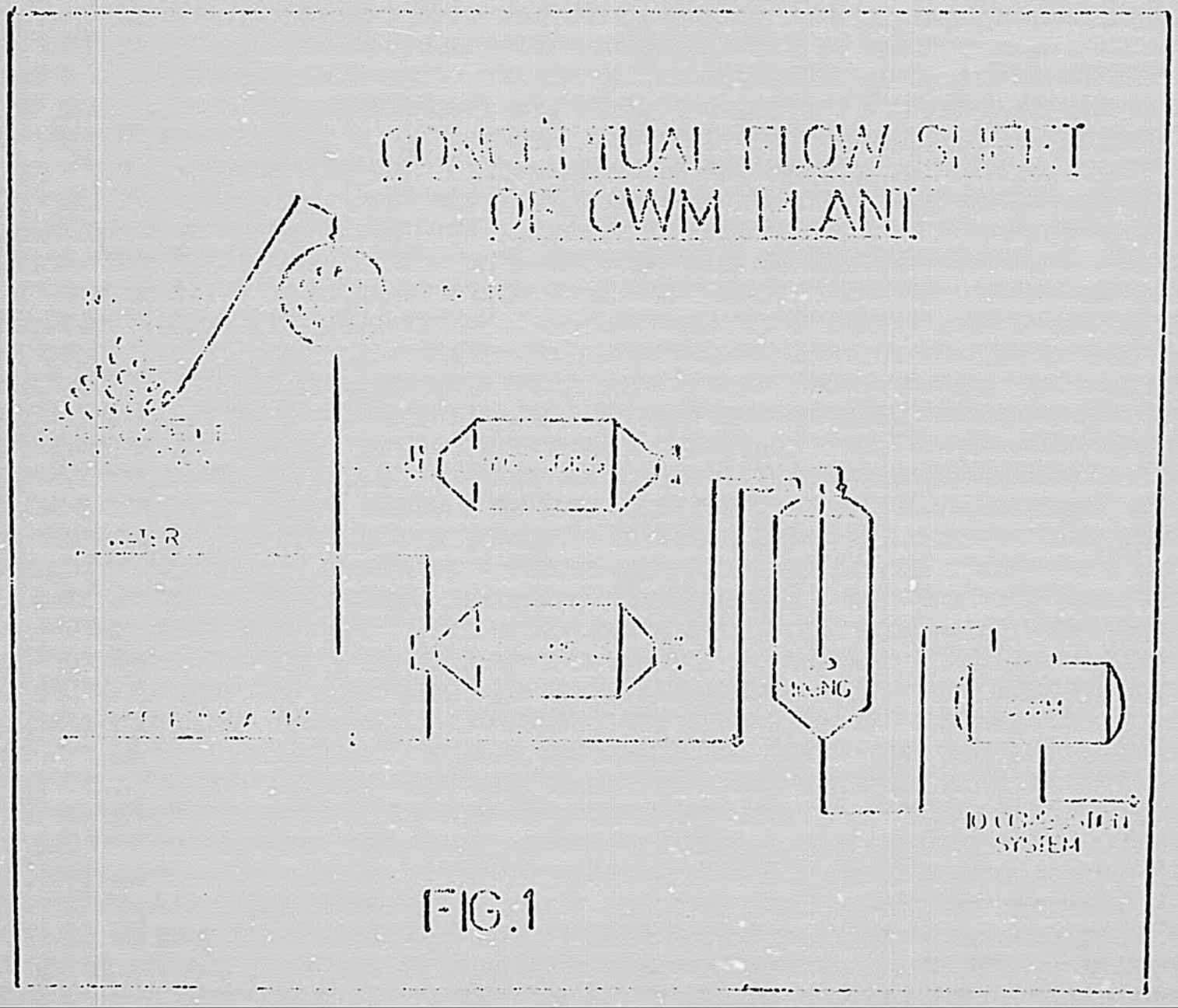

FIG.1

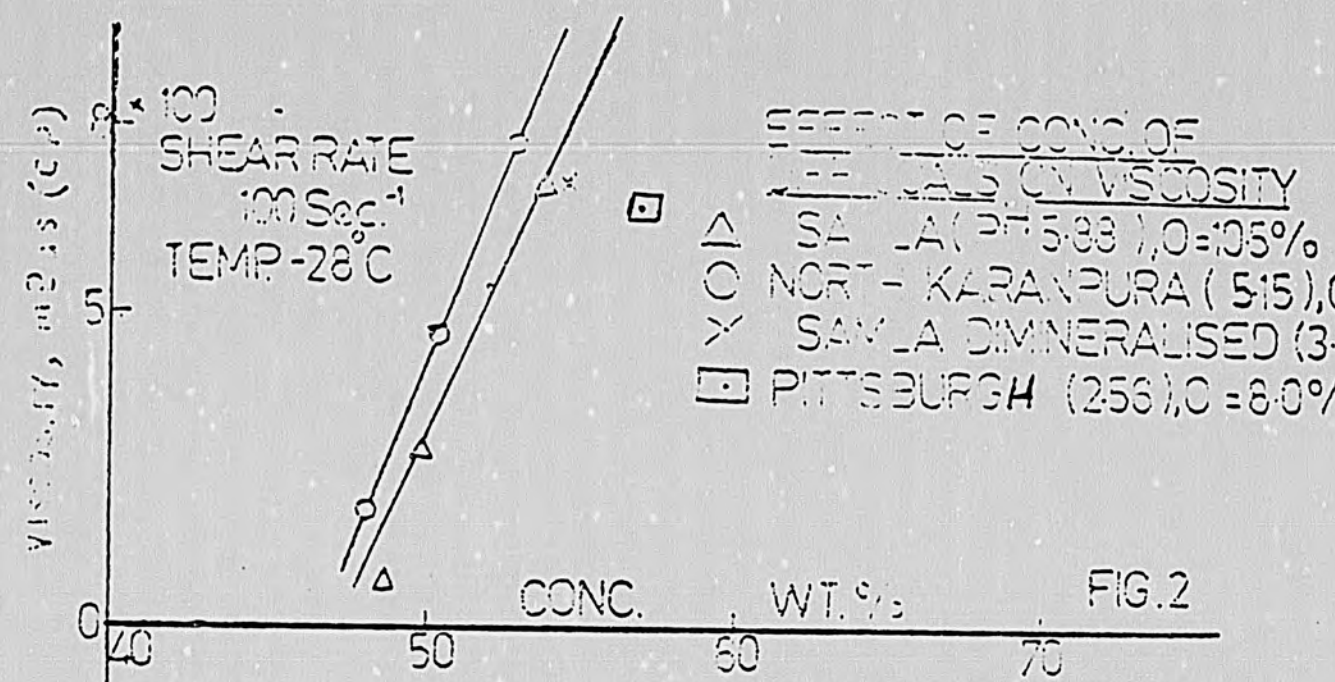
× 100
SHEAR RATE
100 Sec.⁻¹
TEMP.-28°C
EFFECT OF CONC. OF
COAL ON VISCOSITY
SAMLA (PH 5.88), O=10.5%
NORTH KARANPURA (5.15), O=13.5%
SAMLA DIMNERALISED (3.61)
PITTSBURGH (2.56), O=8.0%
CONC. WT.%
FIG.2
0
5
40
50
60
70

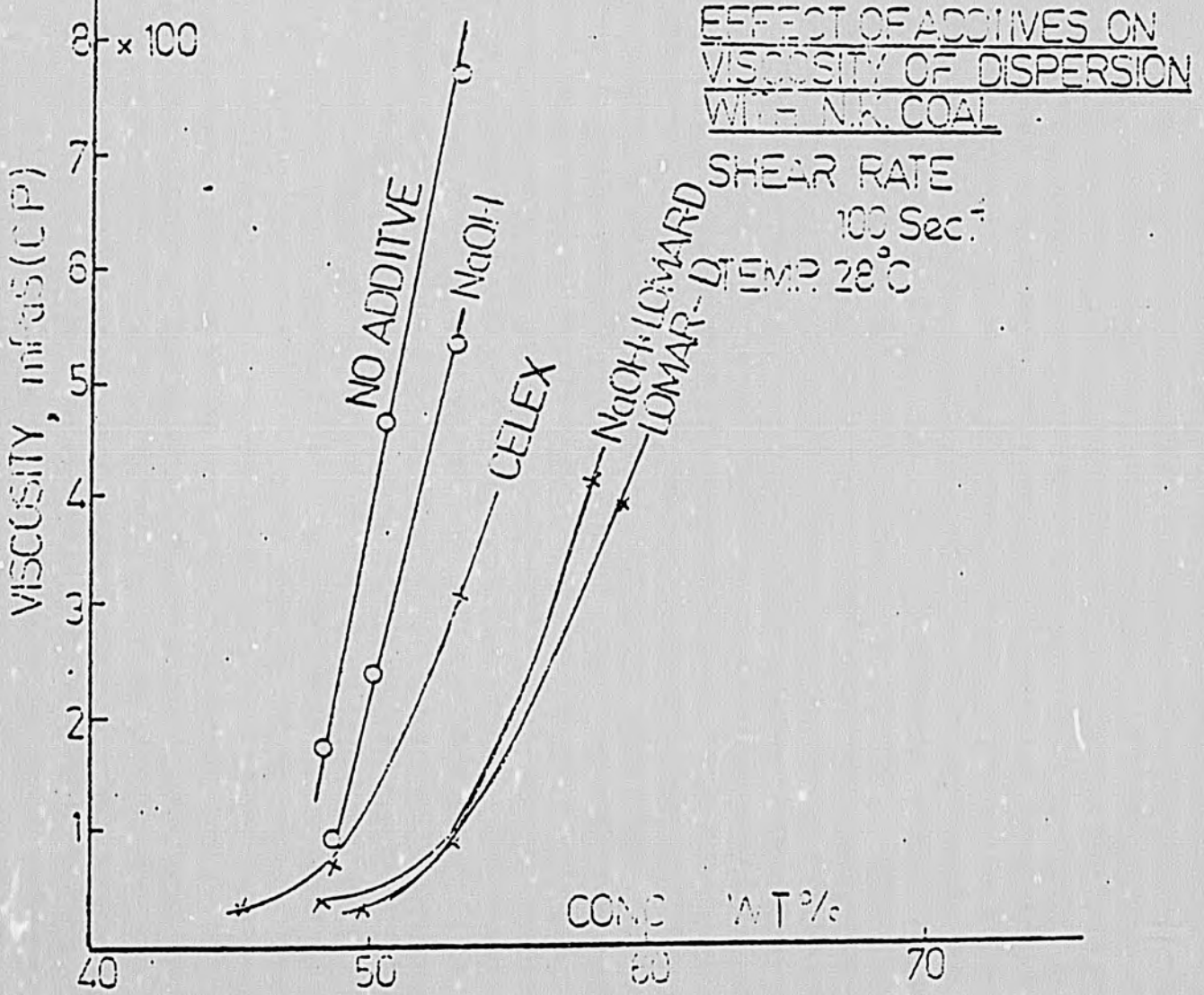
× 100
EFFECT OF ADDITIVES ON
VISCOSITY OF DISPERSION
WITH N.K. COAL
SHEAR RATE
100 Sec.⁻¹
TEMP. 28°C
VISCOSITY, mPa.s (CP)
NO ADDITIVE
NaOH
CELEX
NaOH+LOMARD
LOMARD-D
CONC. WT.%
1
2
3
4
5
6
7
8
40
50
60
70

FIG 3

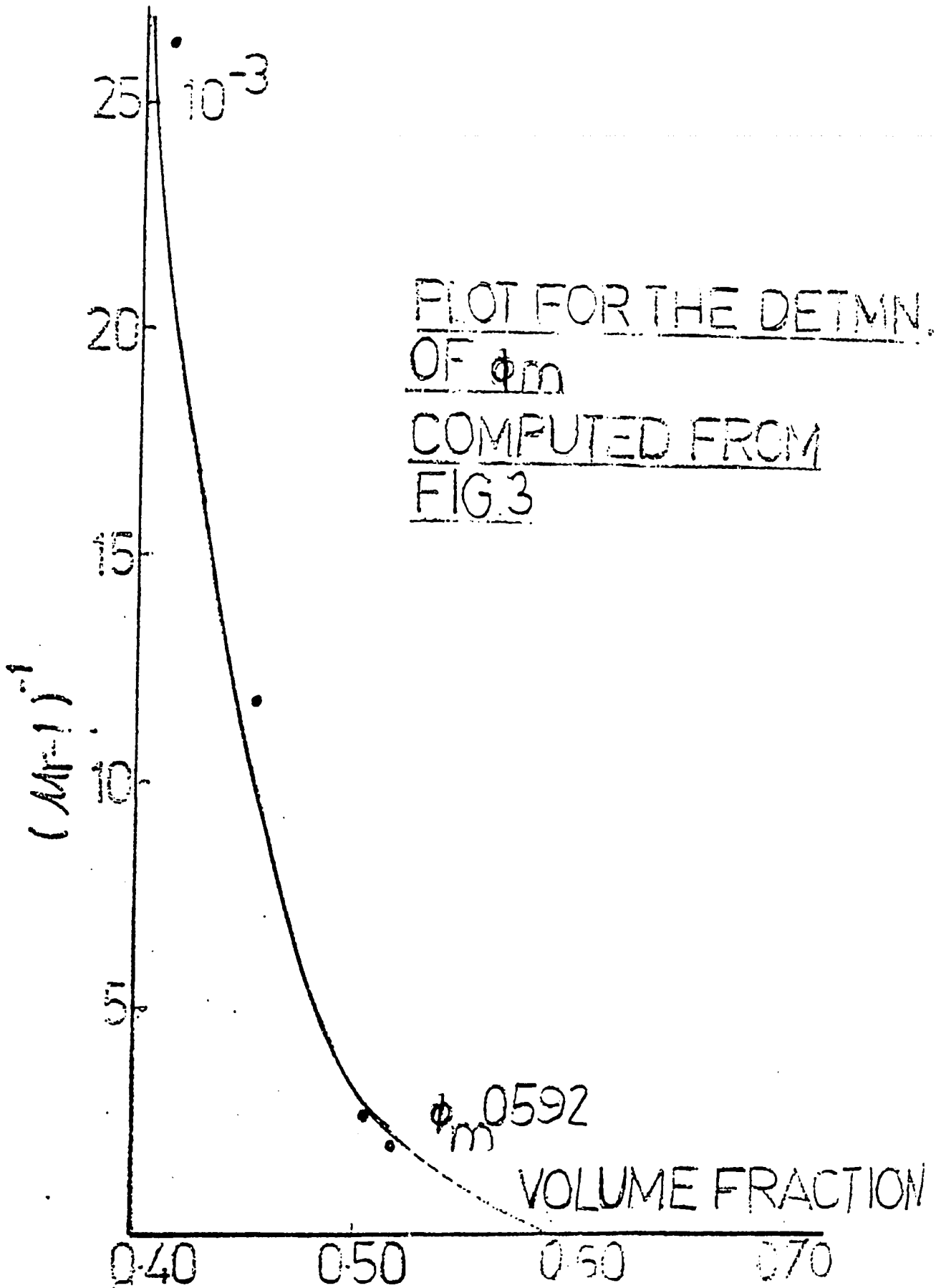

PLOT FOR THE DETMN. OF ϕ_m COMPUTED FROM FIG 3

FIG.4

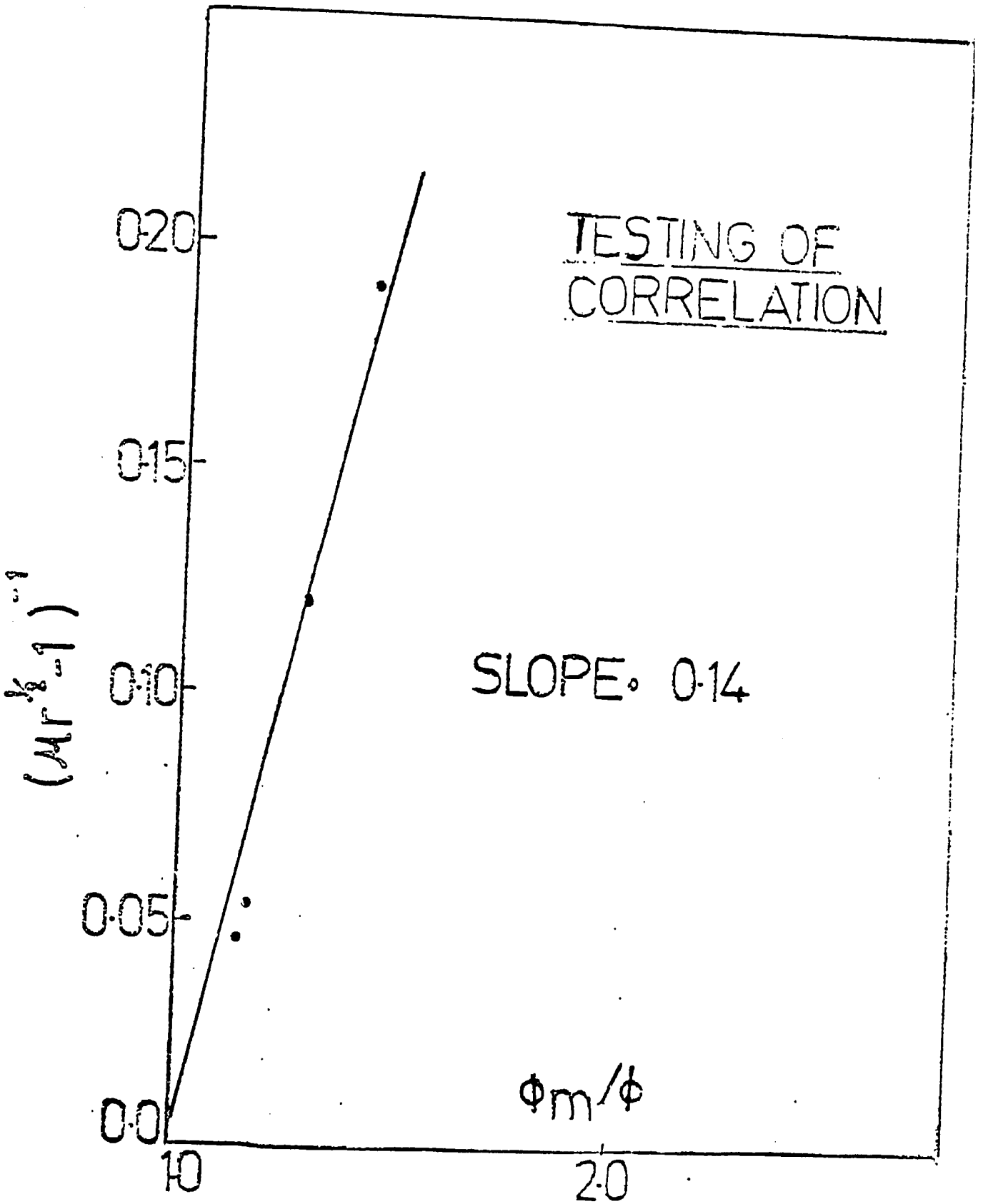
TESTING OF
CORRELATION
SLOPE. 0·14
0·20
0·15
0·10
0·05
0·0
1·0
2·0
$\Phi m/\phi$
$(\mu_r^{1/2}-1)^{-1}$

FIG. 5

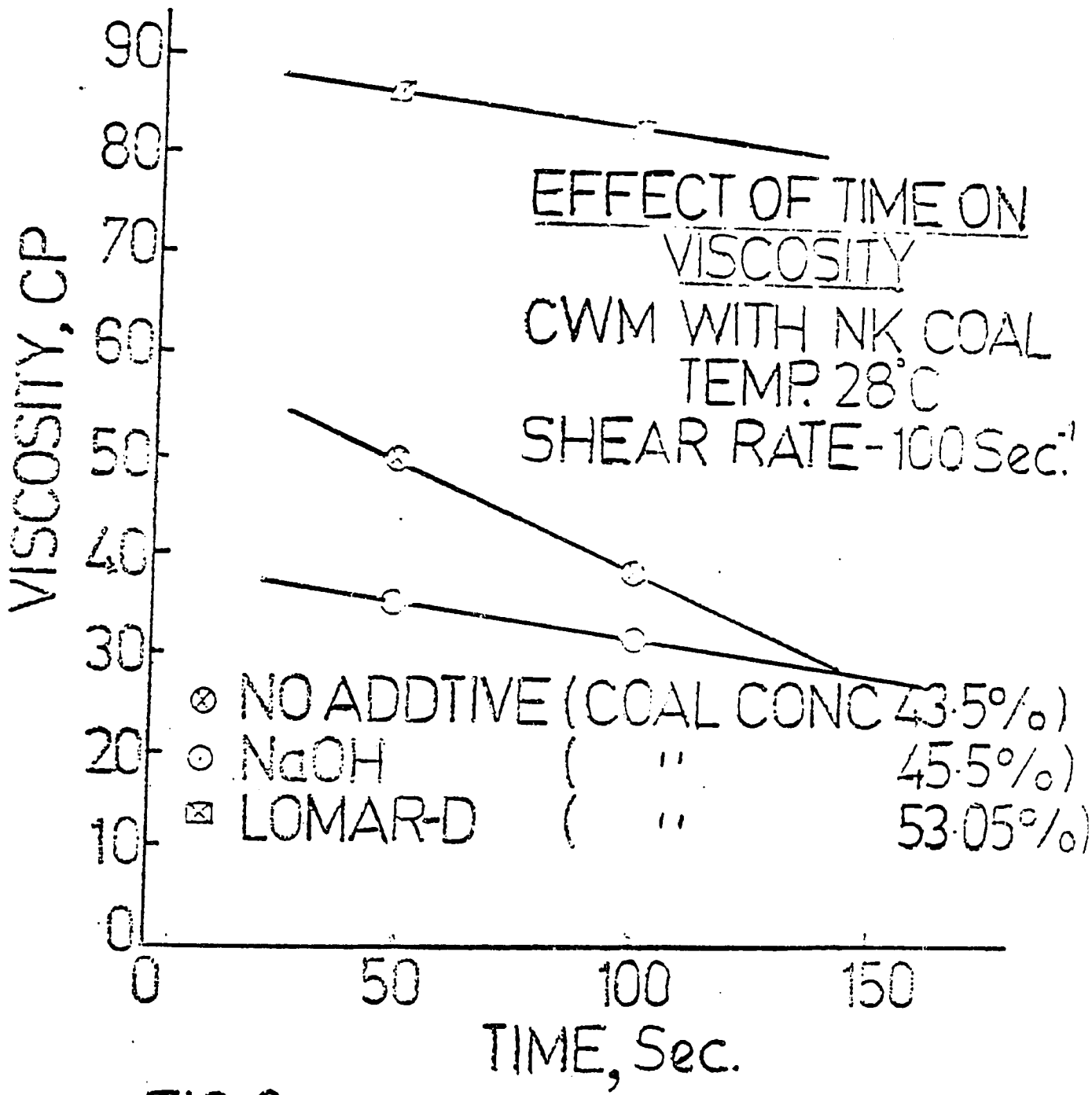
EFFECT OF TIME ON VISCOSITY
CWM WITH NK COAL
TEMP. 28°C
SHEAR RATE-100 Sec.⁻¹
NO ADDTIVE (COAL CONC 43·5%)
NaOH (" 45·5%)
LOMAR-D (" 53·05%)
VISCOSITY, CP
TIME, Sec.
0
10
20
30
40
50
60
70
80
90
0
50
100
150

FIG.6

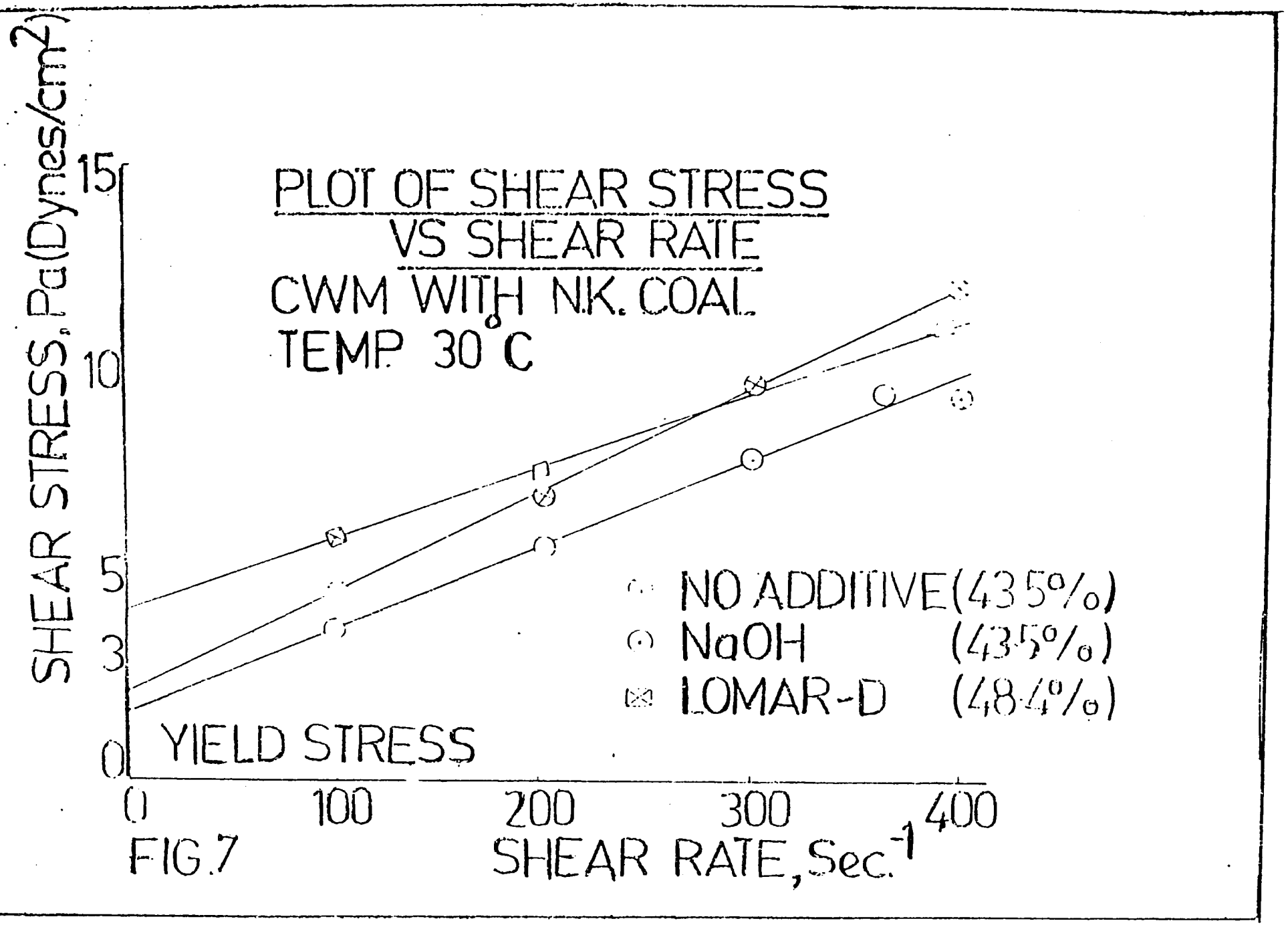
PLOT OF SHEAR STRESS
VS SHEAR RATE
CWM WITH N.K. COAL
TEMP. 30°C
SHEAR STRESS, Pa (Dynes/cm²)
15
10
5
3
0
YIELD STRESS
NO ADDITIVE (43.5%)
NaOH (43.5%)
LOMAR-D (48.4%)
0
100
200
300
400
SHEAR RATE, Sec.⁻¹

FIG.7

COAL WATER SLURRY COMBUSTION IN FLUID BEDS -- PROSPECTS IN INDIA

K. Nandakumar
P. V. L. N. Sarma
K. M. V. Malarkkan
Bharat Heavy Electricals Limited
Tiruchirapalli, India

COAL WATER SLURRY COMBUSTION IN FLUID BEDS —PROSPECTS IN INDIA

K NANDAKUMAR, PVLN SARMA & KMV MALARKKAN

ABSTRACT: *Indian coals are predominantly high ash coals and their washability characteristics are very poor compared to North American or European coals. So any coal water slurry (CWS) system developed to gain the advantages like flexibility in handling and storage, minimum space requirement etc has to contend with higher ash.*

Fluidised bed combustion is suitable for high ash and low heat value fuels and hence CWS combustion in fluid bed has combination of advantages. Combustion of medium ash CWS and washery tailings in fluid bed has been successfully researched in Canada, USA, Sweden, China & Italy. In India and elsewhere washery tailings have been posing pollution problems.

BHEL, Trichy has already initiated testing of slurry fuels similar to washery tailings in their 0.5 x 0.5 m test rig. It is proposed to install a coarse (0-6 mm size) coal water slurry preparation and feeding system and conduct full fledged experiments for firing washery tailings and high ash CWS.

India has about 2500 million tons of low ash but high sulfur bituminous coals. It is proposed that research on low ash CWS preparation and combustion can be done with Assam coals to start with and can be on a wider scale with the advent of successful demineralisation systems.

1.0 INTRODUCTION

Pumpable mixtures of finely ground coal suspended in a liquid have been identified as technically and commercially viable propositions over the past few years of research and demonstrations. Various liquid options like oil, methyl alcohol, ethyl alcohol and water have been successfully tried.

Coal water slurry (CWS) fuels have been fired through atomisers in retrofitted oil or pulverised coal fired boilers, as spray over Stoker fired boilers and in Cyclone furnaces. But most of the above successful trials have been done with low ash raw coals or beneficiated coals with around 5% ash content (1, 2 & 3). Table-1 shows some typical slurry compositions tested.

Sophisticated techniques like chemical demineralisation, oil agglomeration, OTISCA-T processes are being developed for economic beneficiation of different types of coals (4, 5). Deep deashing and cleaning of CWM leaves a residue of fine coal with high ash content but also with substantial heating value. To improve the economics of low ash CWM the high ash fraction is to be utilised (6, 7). The versatile fluid bed combustion technology in which other low quality fuels like washery rejects, biomass and other multifuels have been successfully fired, has been found suitable for coal water slurry fuels also.

2.0 ASH CONTENT OF INDIAN COALS

The coal reserves of India (except the tertiary coals of Assam) are of high ash and low sulfur content. Table-2 shows the ash content of Indian coals and the reserves. The reserves with lesser than 18% ash content is a meagre 320 million tons against the total reserves of 83,052 million tons. The low ash (<6%) high sulfur (≈6%) Assam coal reserves total to 2500 million tons only.

Because of the drift origin mineral matter in Indian coal is not only higher but also homogenously mixed along with the organic

matter, unlike that of other countries having carboniferous coals with low ash and easily separable mineral matter.

3.0 WASHABILITY CHARACTERISTICS OF INDIAN COALS:

Washability index is helpful in comparing the ease with which coals can be washed, irrespective of their ash content. Higher index indicates easy washing.

The washability indices of Indian coals, except Assam coals, range from 15 to 43 and for Assam coals between 47 and 76 (8, 9). In contrast, washability indices of foreign coals from countries like UK, USA and Germany range between 45 and 76 indicating the comparative ease with which they are washable.

On an average, the ash content of cleans from coking coal washeries is of the order of 17.5% with 60% yield.

With non coking coals, the average yield of clean coal is around 70% with 25% ash, while the ash content of the remaining 30% rejects is 60%.

Even with techniques like oil agglomeration the yield has been only 70%–80%.

4.0 COAL WASHERIES AND WATER POLLUTION

Mechanised mining has resulted in higher proportion of smaller coals and fines with considerable free minerals along with the bulk coal. Subsequent crushing and handling prior to washing increase the proportion of fines. With some difficult to wash coals, crushed to below 13 mm, ultra-fines below 100 microns were found to be 6-8% and fines below 0.5 mm were as high as 20–25 per cent of the feed.

Such fine and ultra-fine particles of coal, shale and dirt in washery tailings do not settle easily and are ultimately discharged into the streams or rivers causing water pollution (10).

It is reported that about 0.4 million tonnes of washery tailings are polluting the Ganga and Damodar rivers in the eastern sector. Disposal of such large amounts of combustible tailings from coal cleaning plants poses difficult problems. Burning a slurry made of coal tailings in a fluidised bed combustor is an economic alternate means of disposal.

For efficient and economic beneficiation mostly wet processes are used in Indian coal washeries(8). Table–3 lists the washeries with the respective installed capacities, both existing and proposed, for prime, medium/semi coking and non-coking coals totalling to 64.9 million tonnes (prime coking 33.8, medium coking 17.6, non coking 13.5 million tons).

5.0 CWS COMBUSTION CHARACTERISTICS IN FLUID BED

CWS combustion in fluidised bed has been found to be more efficient w. r. t. carbon burnup efficiency than raw coal combustion. The characteristics of CWS combustion differ from raw coal combustion. (11)

5.1 Agglomeration and reduced elutriation

Due to the evaporation of water at high temperature, CWS droplets form porous solid fuel spheres, with an ash layer left on the surface. Such spheres do not worn out fast, but at the same time provide much reaction area. The thin ash layer causes the diffusion resistance to be decreased. Because of such agglomeration, elutriation losses reduce in comparison with coal particles.

5.2 Enhanced and uniform bed reaction

With coal firing in fluid beds, the oxygen is consumed within a thin layer over the distributor and the reaction of fuel with CO_2 is at a lower degree.

With CWS firing high cencentration of water vapour emanates because of which gasification reactions take place.

$$C + H_2O \rightarrow CO + H_2$$
$$C + 2H_2O \rightarrow CO_2 + 2H_2$$

Eventhough the rate of carbon consumption is lower with gasification reactions compared to direct oxidation, since gasification reactions take place throughout the upper region of the fluid bed, the combustion rate of the whole bed is increased.

5.3 Less sensitive to excess air

Because of the gasfication reactions with water vapour, combustion does not very much depend on the excess air as much as the dry coal particles depend. Lower excess air combustion of CWS is found possible.

5.4 Low No_x emission

Because of reduction atmosphere in the bed the No_x formation is depressed.

5.5 Effect of water content on combustion efficiency

There is a myth prevailing among many people that addition of water to coal brings down the efficiency drastically. If we assume that the added water does not affect combustion reactions and calculate the heat loss due to moisture in fuel according to ASME P.T.C. for steam generating units; the efficiency loss comes to about 1.5% for every 10% increase in moisture content of fuel. The efficiency drop with increase in moisture content is shown in figure 2 for a typical Indian coal. From figure 4 we can observe the effect of varying water content from 0 to 50% on the sensible heat loss due to dry gas, due to moisture from hydrogen in fuel and heat loss due to evaporating water from CWS.

The addition of water should be optimised to reduce the loss. When converting oil fired boiler to CWS, the cost of modifications and cost of fuel oil saving should balance the efficiency loss due to moisture addition for viability.

5.6 Advantages of CWS Firing in fluid bed

- Simplicity in feeding and distribution for atmospheric and pressurised systems.
- Elimination of coal drying for high moisture fuels.
- Carbon burn-up efficiency of CWS could be higher than that of crushed coal with fines, because of lower elutriated carbon loss.
- No_x emission from the fluidised bed burning CWS is lower (about 50%) than that burning dry crushed coal.
- Sulphur capture effectiveness of Cao mixed directly with CWS is much better (about 25%, more) than that of using conventional desulphurisation method of adding limestone.
- CWS eliminates need for steam (60% by wt. of coal) in fluidised bed coal gasification process.
- Elimination of inert gas for pressurised feeding of coal.

6.0 STATE OF ART – CWS COMBUSTION/ GASIFICATION IN FLUID BEDS

USA, Canada, Sweden, UK and China are seriously engaged in the research on coal water slurry combustion and gasification in fluidised bed(12). Table–4 lists the work carried out in the above countries.

USA

The Cool water gasification programme in USA has generated electricity in May 1984. The 1000 t/d gas plant has Texaco process where coal water slurry is gasified.

USDOE, Morgantown along with NCB, UK is working on CWS combustion in pressurised fluid bed for combined cycle applications.

CANADA

Energy Mines and Resources Department, Government of Canada has tested firing combustible tailings from a coal cleaning plant in Nova Scotia, in a 1' x 1' fluid bed combustor designed by B & W. Stable and efficient combustion has been achieved.

SWEDEN – AMMONIA GENERATOR

CWS has been successfully used as a feed stock for ammonia production in a gasifier operated by Boliden AB. With CWS (CARBOGEL), ammonia production was excellent. Soot was found to be lesser than with heavy fuel oil.

UNITED KINGDOM

Coal water mixture with low sulfur, high valatile matter has been fired in a pressurised 6 atm fluidised bed combustor of 12 inch diameter. High combustion efficiency (99%), low No_x emis-

sions and good fuel distribution have been observed without any hindrance due to presence of water.

CHINA

Zhejiang University, Hangzhou. China has conducted lot of tests in their 250 x 250 mm and 500 x 500 mm test rigs with 0.5 to 3.0 mm size coal of 30% ash content with varying water content (upto 70%), excess air (20%) and bed temperature (600–1100°C). They have also experimented with two beds, one working as combustor, the flue gas of which acts as fluidising medium of another gasifier ultimately getting gas with calorific value as high as 1400 kcal/Nm^3.

ITALY

Research on coal water slurry combustion in fluidised bed has been done at Institute di Ricerche Sulia Combustions, Napoli, Italy and ENEL, Pisa, Italy (13).

7.0 SCOPE FOR LOW ASH CWS SYSTEMS

Retrofitting old oil fired boilers with CWS firing is considered as one of the commercially attractive propositions. In India it is estimated that about 30% of the petroleum fuel consumption in boilers is in smaller capacity boilers. So development of low ash CWS system has formed a part of the total CWS technology development.

The low ash bituminous coal reserves of Assam, total to 2500 million tons, vide Table–5. The significant low ash fuel reserves could form the feedstock for preparation of slurries to start with. Meanwhile successful demonstration of economical chemical demineralisation systems or oil agglomeration techniques in medium scale plants could lead us to the utilisation of coals having 18 to 40% ash content.

8.0 PROJECT STATUS IN BHEL

8.1 Project Sequence

The high ash content and the poor washability index of Indian coals are pointers to the problems that are likely to be faced by a CWS combustion system which may necessitate incorporation of coal beneficiation, ultrafine grinding and firing through atomisers.

Considering the spurt around the world in fluidised bed combustion, BHEL has chalked out the following sequence of research for CWS combustion.

1. Firing washery tailings in fluid bed combustors along with middlings or washery rejects fired as raw fuels.

2. System development for high ash, coarse (0-6 mm) coal water slurry preparation and firing in fluid bed.

3. Design and development of low ash coal water slurry preparation and firing system integrated with a suitable coal beneficiation system.

8.2 Slurry Preparation

To simulate washery tailings, BHEL prepared slurries with pulverised coal (75% lesser than 75 microns). Soluble starch and carboxylic sarfactant were added to stabilise the slurry. Table-6 gives the analyses of the coals used. The coal loading upto 60% could be achieved with coal ash content varying from 27 to 47.9 per cent.

8.3 Combustion Tests

Already, BHEL has successfully burnt spent liquor having 46% water and of 2400 kcal/kg calorific value in a 0.5 x 0.5 in fluid bed test rig. CWS prepared out of pulverised coal was tested in a set up specially designed for the same as shown in Figure–1. When the fluid bed combustor was having stable combustion with raw coal feed (0-6 mm size) CWS was introduced into the bed. To start with, the raw coal to CWS proportion was of the order of 80 : 20 by heat content. The stable bed temperature indicated the sustenance of combustion with CWS firing.

Additional set up for CWS preparation and feeding, with instrumentation has been planned as detailed in figure-3. Detailed experiments will be conducted to collect quantitative results.

8.4 Activities under progress

1. Literature survey	–	Completed
2. Identification and procurement of instruments and equipment	–	Purchase order placed for two stage progressive cavity screw pump to handle 0-6 mm size CWS of 3 t/h, 3" ∅ inlet and outlet, 9 kg/cm² pressure. Specifications prepared for online viscometer and density/mass flow meters.
3. Detailed design of system	–	Detailed design of CWS feeding system for fluid bed combustor taken up. Design of the stirrer (turbine type) and tanks completed. Identification of additives and stabilisers under progress.

8.5 Schedule

Major activities involved in BHEL's part of work along with date of starting, completion and duration are as given below :

		Start	Complete	Duration (months)
1.	Identification, evaluation and procurement of instruments and equipment	Oct 84	Dec 85	15
2.	Detailed design of system	Dec 84	Mar 85	4
3.	Fabrication	Jan 85	Aug 85	8
4.	Erection of equipment	Mar 85	Nov 85	9
5.	Combustion tests in fluid bed	Apr 85	Sep 86	18
6.	Atomisation studies	June 85	Dec 86	18
7.	Combustion by atomisation	Jan 86	Dec 86	12
8.	Study tour to US	Apr 85	Apr 86	1 month
9.	Reporting	Every 3 months		

TABLE 1

CHARACTERISTICS OF TYPICAL COAL WATER SLURRIES TESTED

Company (1)	Product Name (2)	Parent Coal ash % (3)	Slurry Solids % (4)	Viscosity CP (5)	HHV K Cal/kg (6)	F. C. % (7)	V. M. % (8)	Ash % (9)	Moisture % (10)
USA									
Columbia Chase Corpn.	CWM	6.95	70.0	1000	4500	39.6	24.9	5.58	30.0
North American CWF	CWF	—	—	<1000	6180	—	—	3.4	—
Amax	Coal water	8.7	62.0	1500	6250	37.0	23.0	1.8	38.0
ARC		30-40	70-75	400-1000	5550	—	—	2.5	25-30
Coal Liq.	CW	—	70.0	950	—	38.5	25.2	5,0	30.0
OXCE Fuel	OXCE	20	80.0	<1500	5950	—	25.0	<5.0	35.0
Slurry Tech	Coal AL	5.2	75.0	1000	6130	46.4	24.5	4.1	25.0
Energy Resource Engg.	CWM	3.5	50	—	—	—	—	0,3	50

TABLE 1 (CONTD.)

Company (1)	Product Name (2)	Parent Coal ash % (3)	Slurry Solids % (4)	Viscosity CP (5)	HHV K Cal/kg (6)	F. C. % (7)	V. M. % (8)	Ash % (9)	Moisture % (10)
UK									
James Howden	Howden micro coal water	4.4	70,0	—	—	30.3	27.3	3.4	—
Babcock	Coal	7.0	75.0	100	5710	42.0	26.0	7,0	25.0
SWEDEN									
Fluid Carbon Int.	Fluid carbon	20.0	80.0	<1500	5950	—	25.0	<5.0	20.0
AB Carbogel	Carbogel	3.8	72.0	400	6070	44.8	25.8	1.4	28.0
Nycol	NycolCAM	3-6	70.0	1500	5120	—	—	—	30.0
JAPAN									
Sumi Tomo Heavy Ind.	Ash reduced CWS	8.0	70.6	2600	4330	—	—	5.2	29.4

TABLE – 2

ASH CONTENT OF GONDWANA INDIAN COALS

Coal type	Average ash content (% Wt.)	Total reserves (Billion tonnes)
Non-coking coals		
Superior quality		
Grade A & B	< 18	0.320
Grade I & II	18–24	3.648
Unclassified	< 32	18.032
Inferior quality	> 32	40.788
Coking coals		
Prime coking	< 15	5.851
Medium coking	15–17	9.434
Semi/weakly coking	> 17	5.070
LIGNITES	3–17	2.089
	Total	83.052

TABLE – 3

COAL WASHERIES OF INDIA

	Capacity MT/Yr	
I. PRIME COKING		
Existing		
Dugda I & II	4.8	
Bojudih ... — ...	2.0	
Sudamdih	2.0	
Chasnalla	2.0	
Pathardih	2.0	
Lodna	0.4	
Durgapur (HSL & DP2)	2.85	
Jamadoba	1,45	
Moonidih	2.0	
Bararah	0.5	..... 20.0
Proposed		
Mohuda	0.6	
Putkee	3.6	
Bhalgora	4.0	
Dharmaband	3.6	
Madhuband	2.0	..... 13.8
II. MEDIUM COKING		
Existing		
Kargali	2.7	
Kathara	3.0	
Sawang	1.0	
Gidi	2.8	
W. Bokaro ...	2.5	..... 12.0
Proposed		
Keola	2.6	
Ramgarh	3.0	..... 5.6

III. NON-COKING

Proposed

Sodepur	...	...	...	0.85	
Biha CCP	...	...	...	4.50	
Jhinguda CPP	...	...	...	3.00	
South Balanda	...	...	...	1.65	
Bhortpur	...	...	...	3.50	
					..... 13.5
		Total	...		64.9

C 10

TABLE — 4

STATUS OF CWS COMBUSTION / GASIFICATION TECHNOLOGY

Country	Application	Projectants	Test Rig Details	Year
Canada	Utilisation of combustible washery tailings	Energy Ministry with B & W	Atmospheric fluid bed 1 ft x 1 ft	1983–84
China	Combustion & gasification of washery rejects and pipeline transported coal	Zhajiang University	Atmospheric, 80mm ∅, 250 x 250 mm 500 x 500 mm beds single bed combustor and two bed gasifier	1981 onwards
Sweden	Gasifier for production of ammonia	Garbogel AB Boliden AB	—	1981 onwards
U. K.	Pressurised fluid bed gasifier and combined cycle plant	NCB/CURA	1 ft ∅ gasifier	1982
USA	Pressurised fluid bed gasifier for combined cycle plant	USDOE	1000 t/d	1984
Italy	CWS utilisation in fluid bed combustors	Institute di Ricerche Sulla Combustione, Italy, & ENEL, Pisa, Italy	—	1984

TABLE — 5

LOW ASH COAL RESERVES

Field	Moist. %	Ash %	V. M. %	F. C. %	Reserves Million tons	Total
Makum	2.1 — 3.9	1.9 — 6.3	39 — 45.2	49.3 — 50.8	1664	
Dilli Jaipur	3.9 — 6.0	0.8 — 6.3	42 — 46.7	32.3 — 48.2	95.4	
Namchick Namput	2.3 — 3.3	2.0 — 8.4	43.5 — 51	41.3 — 49.7	610	
Nazira	1 — 10.0	0.7 — 4.0	36 — 44	51 — [illegible]4	54	
Others	0.8 — 13.0	2.8 — 6.0	33.8 — 40	46 — 54.9	76.2	
					BITUMINOUS	2499.6

TABLE — 6

CWS COMPOSITION PREPARED BY BHEL

Coal name	% Coal in slurry	Particle size	Prox. analysis					Slurry CV Kcal/kg.
			M	Ash	VM	FC	CV	
Akashkinaree	45.87	75 microns	0.50	31.80	14.50	53.20	5840	2678
Kooridh	59.60	75 microns	0.60	41.70	13.20	44.50	4743	2826
Singareni	49.00	75% less than 75 microns	8.80	27.50	25.90	37.80	4925	2413
Swang Middlings	54.00	75% less than 75 microns	1.03	47.93	20.60	30.44	3675	1984

REFERENCES

1. Michael C. Cook, Benjamin F. Gilbert
   Coal slurries fuels: an assessment by a US public utility, Modern Power systems, July 1984, pp 19–23.

2. H. Whaley, P. G. Landry, I. D. Covil
   Coal-water mixture combustion demonstated at New Brunswick, Modern power systems, July 1984, pp 37–42.

3. D. A. Smith, R. C. Laflesh, H. Sintorn
   Coal water mixtures are being tested in a Swedish district heating plant, Modern Power Systems, July 84, pp 45–40.

4. Koller D. V. Jr., Coal refining by physical methods for the preparation of coal slurries with less than one percent ash, 5th International Symposium on coal slurry combustion and technology, Orlando, USA.

5. T. K. Bhowmick, N. Chakraborthy
   Considerations for the development of coal water mixture as an alternate fuel, First USAID-GOVI Workshop on alternative Energy Resources aud Development, Nov. 1983.

6. K. Nandakumar, P. V. L. N. Sarma, K. M. V. Malarkkan
   Development of coal water slurry combustion technology – BHEL's view point in Indian context. Paper presented at the First Joint USAID/Govt. of India coal-biomass workshop, New Delhi.

7. Syn Fuels Week, July 30, 1984.

8. F. N. Ash (Editor)
   Studies on coal preparation in India, CFRI, 1972.

9. A. K. Chakravarti
   Status of coal cleaning in India, First USAID-GOI, Workshop on Alternative Energy Resources and Development, Nov. 1983.

10. J. Chattapadhyay. R. N. Bose, A. K. Chakravarti, Treatment of washery effluents for pollution control, Fuel Science and Technology, Vol. 3, April 1984, pp 55-60.

11. Ke-Fa Cen et-al
    Combustion and gasification of coal-water slurry in fluidised beds. 7th International conference on fluidised bed combustion, Philadelphia, pp 253-262.

12. Daniel Bienstock, Oliver K. Foo
    History and development of coal-liquid mixture Pittsburgh Energy Technology Center, Pittsburg, USA.

13. U. Arena, G. De Michele, A. Maresca, L. Massimilla. M. Miccio coal water slurry utilization in fluidised bed combustion 6th International Symposium on coal slurry combustion technology, Florida, June 1984.

FIG. 1. SCHEMATIC DIAGRAM OF FLUIDISED BED TEST RIG.

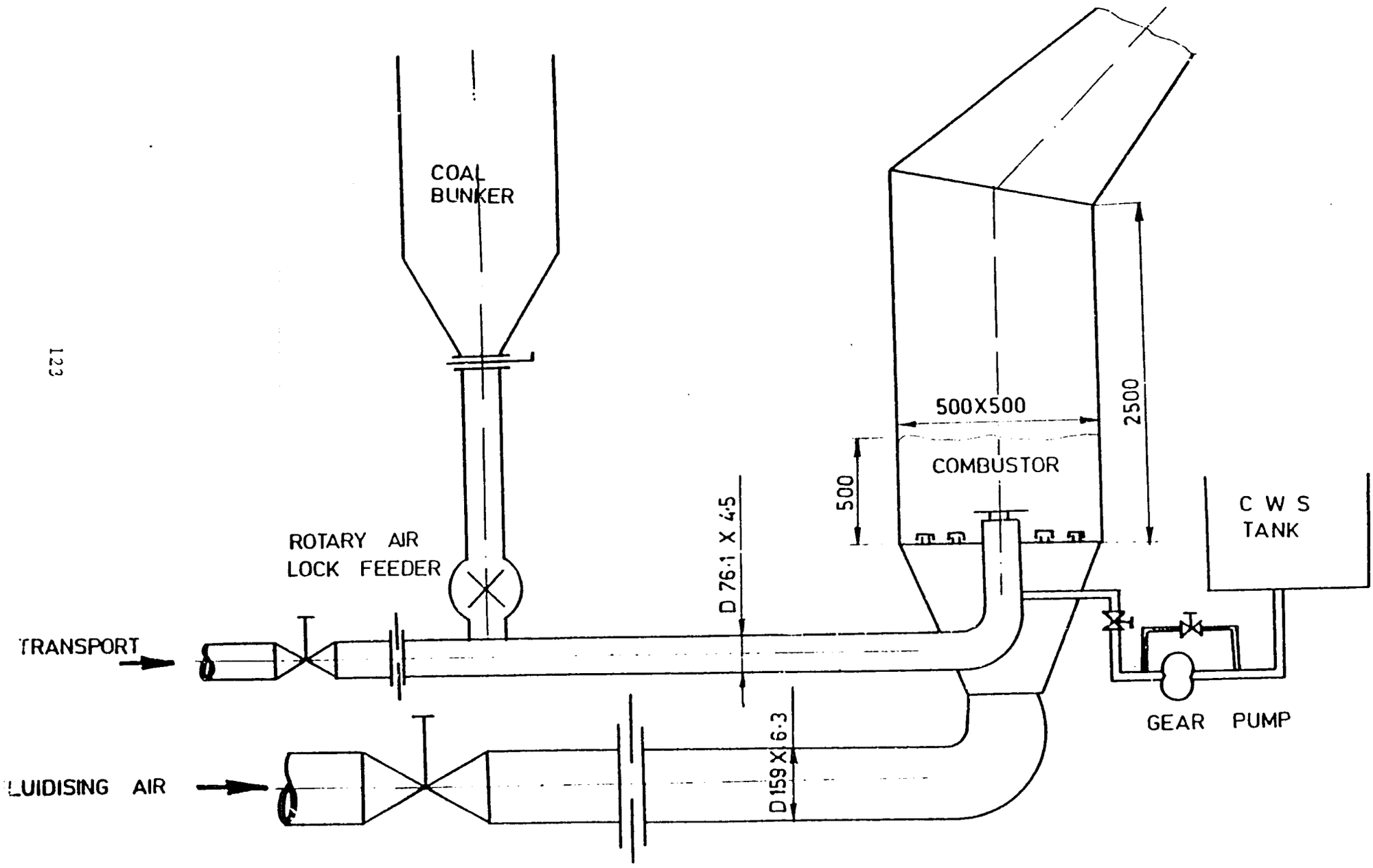

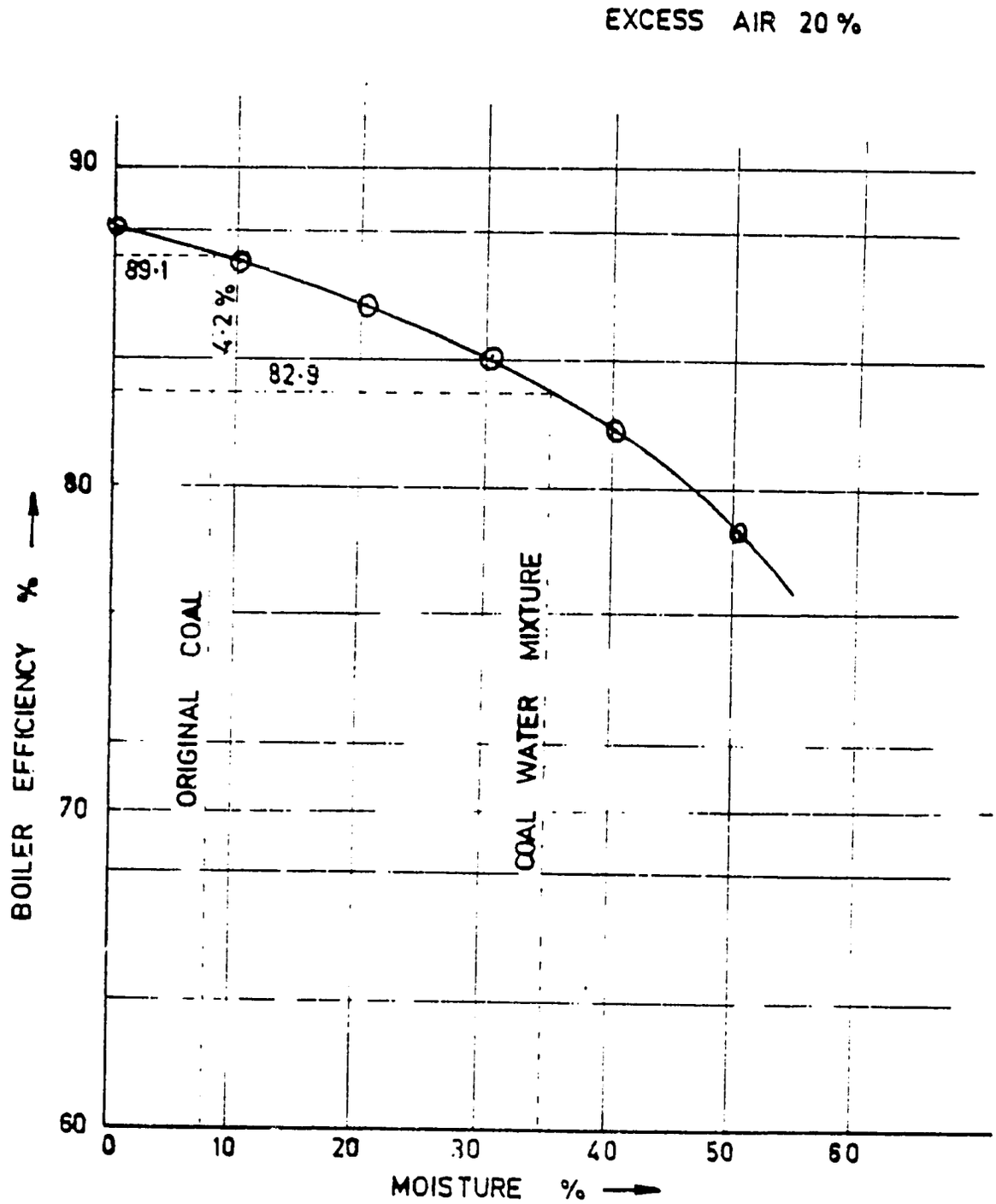

FIG.2. EFFECT OF MOISTURE IN COAL ON BOILER EFFICIENCY DROP

FIG.3. SCHEMATIC LAYOUT OF THE PROPOSED PROJECT FOR COMBUSTION DEMONSTRATION OF CWS IN FLUIDISED BED

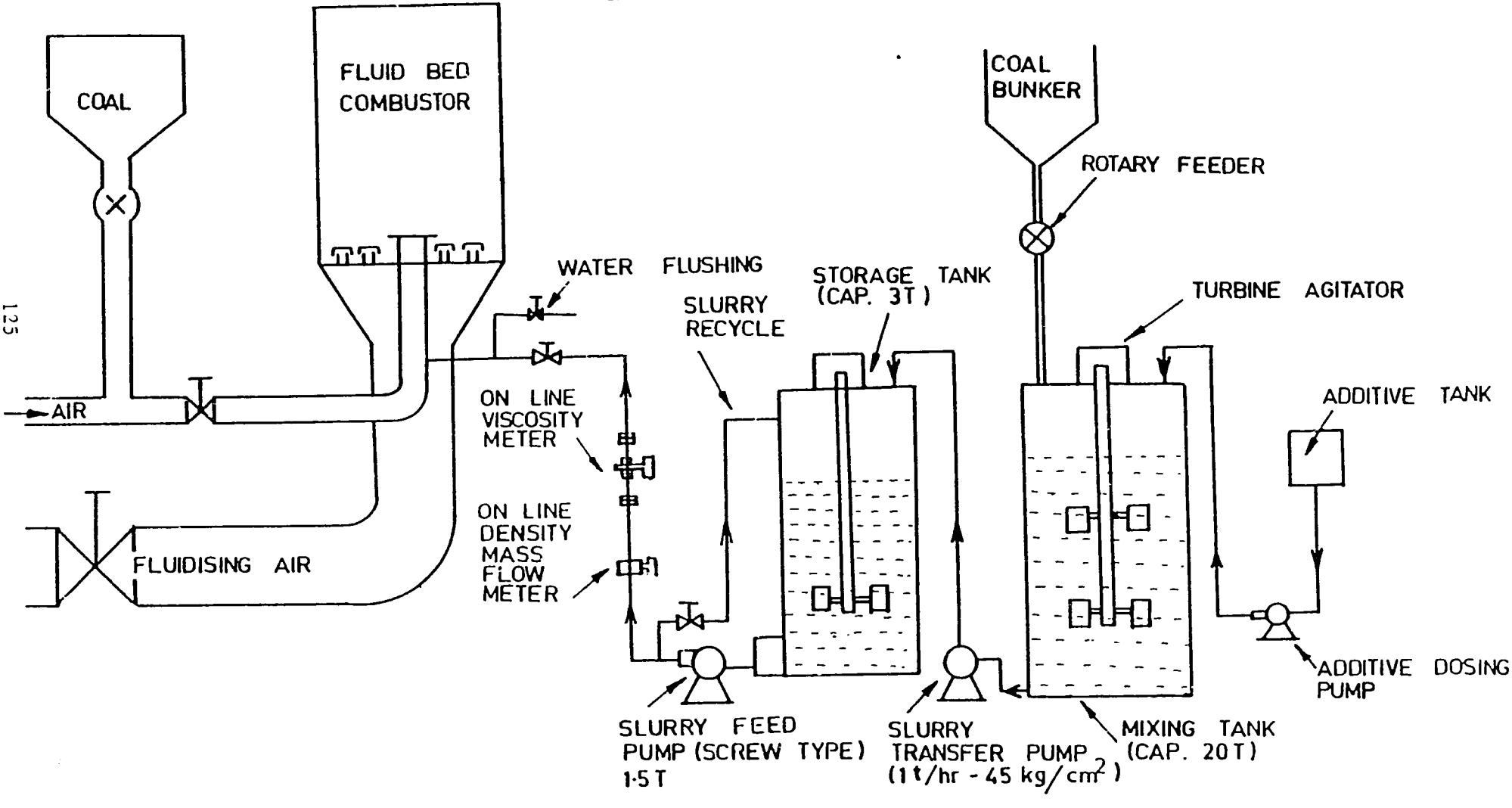

FIG.4. VARIATION OF LOSSES DUE TO MOISTURE IN COAL

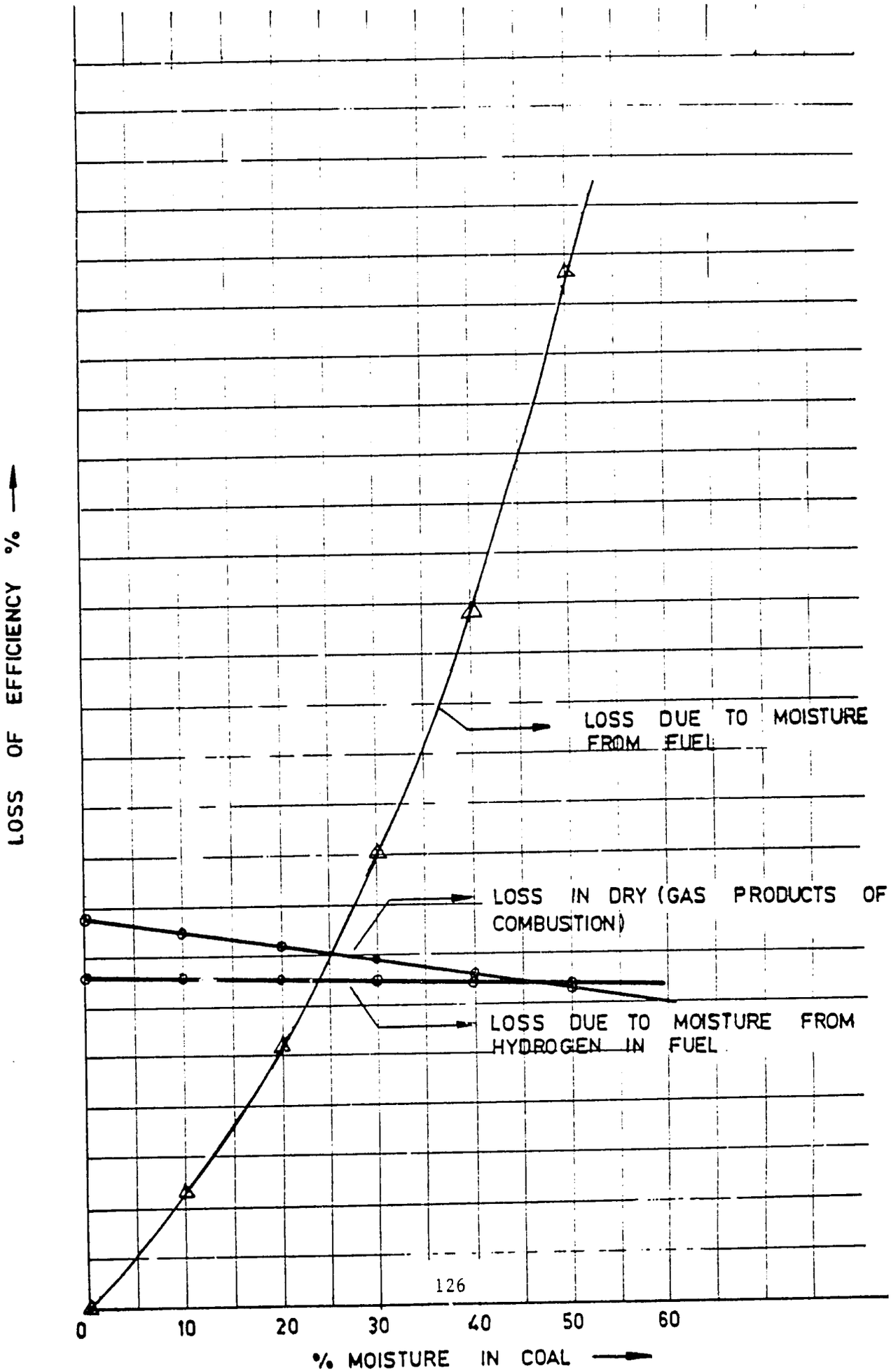

COMBUSTION OF BIOMASS IN AN ATMOSPHERIC FLUIDISED BED COMBUSTOR

R. Vasudevan
Bharat Heavy Electricals Limited
Tiruchirapalli, India

COMBUSTION OF BIO-MASS IN AN ATMOSPHERIC FLUIDISED BED COMBUSTOR

Dr R VASUDEVAN

INTRODUTCION

India as a developing country cannot afford to expend its foreign exchange reserves for the import of primary energy viz oil to meet the growing demands of Industry. To a large extent, the resources available within the country viz. coal is being exploitea and better ways of energy conversion and utilisation are being developed. Also, India as a leading country among developing Nations, in the agricultural production, generate a huge surplus of agricultural residues. These agricultural wastes totalling about 350 Million tonnes annually can to a large extent replace Fossil fuels. This paper discusses the salient aspects of better utilisation of these agro-wastes through the latest combustion technology. (fluidised bed combustion.)

INDIA'S AGRO-FUELS GENERATION

India produces about 140 million tonnes of food grain per annum. For every tonne of food grain, two and a half tonne of crop residues are harvested. Thus the production of crop residues reaches 350 million tonnes annually.

Agricultural residues are traditionally used for Animal feed, fuel, roofing material etc. Now due to the Green revolution, high yield hybrid varieties of Paddy and othar grains are cultivated with extensive usage of Fertilisers and pesticides causing the residue unsuitable for cattle feed. Thus these bio-masses are to be utilised as energy substitutes. Use of bio-mass for energy purposes has been receiving considerable attention for some years. Bagassse and rice husks are being extensively used as boiler fuel. Production of Bio-mass pellets of high density and pellets of pyrolysed bio-mass is being attempted on commercial scale. Gasification of selected bio-masses also has been achieved. Attempts are going on for fermentation of some bio-mass to produce alcohol. Of all the utilisation techniques available, the most suitable for energy recovery of bio-mass is through the use of fluidised bed combustion.

TRADITIONAL METHODS OF COMBUSTION OF BIO-MASS

Bio-mass burning furnaces, developed in the 1840'S, include (i) Step Grate furnace, (ii) Horse shoe furnace and (iii) Eisner furnace. Essentially the above furnaces are of "PILE BURNING" type i.e. the fuel is fed in bulks and the burning is effected on the conical shaped heaps with very high excess air operation.

Subsequently semi suspension burning method for bio-mass was developed, in which a combination burning in suspension and a thin uniform fuel bed burning will take place. These type of furnaces (spreader stoker with dump grate arrangement) operate with less excess air when compared to the pile burning type furnaces. But these furnaces also suffer from high unburnts and poor load response.

PRINCIPLE OF FLUIDISED BED COMBUSTION

Fluidised bed combustion is a new method of burning a wide variety of fuels. The process involves burning the fuel in a bed of crushed refractory/sand which is maintained in a Fluidised State by the combustion air.

When air passes upward at low velocities through a mass of finely divided solid particles (such as crushed refractory/sand) the particles are not disturbed. As air flow is gradually increased, the particles become suspended. Further increase in the air flow gives rise to bubble formation and vigourous turbulence, (Ref. Fig. 1) the bed of solid particles has the same characteristics as a liquid and thus the bed is termed as Fluidised Bed Cambustion of fuel.

Ideally the fluidised bed when hot, provides the following necessary requirements for efficient combustion.

1. Large surface area per unit mass of fuel
2. Long time of contact or large residence time (Residence time is many times greater than that of suspension firing).
3. High relative speed between air and fuel for turbulence. With these features and large bed thermal storage, the fluidised bed combustion boiler is able to burn a wide variety of fuels.

ADVANTAGES OF FLUIDISED BED COMBUSTION

1. Ability to burn fuels containing very high inerts. (Washery rejects containing 73% ash and 1% moisture have been successfully burnt in the prototype FBC Boiler at BHEL, Tiruchy).
2. Fuel flexibility (Burning fuels ranging from fuel oil having HHV of 10500 Kcal/kg down to rejects having a heat value of 1900 Kcal/kg in the same combustor has been demonstrated by BHEL, Tiruchy.
3. Higher efficiency – combustion efficiency 90-92% and boiler efficiency of 80% based on higher heating value of coal was achieved. Even with washery rejects, a high boiler efficiency of 75% was achieved. For bio-mass, the combustion efficiency exceeds 99%.
4. As the bed is maintained between 850°C, and 950°C, ash does not get heated to its initial deformation temperature. Hence, no clinkering or slagging or hard deposits on heat exchanger tubes occurs.
5. Ash is less erosive and hence life of boiler second pass and ID system is increased.
6. Because of low temperature combustion, corrosion caused by alkali compounds in ash is significantly reduced.
7. Requires much less boiler cross sectional area than a stoker.
8. Uniform temperature throughout the furnace volume.
9. No need to spray water (as required for stokers) or remove fines.
10. Reduced emission of harmful nitrous oxide.
11. Sulphur dioxide emission can be reduced to an acceptable level with least expense.
12. Operation is as simple as that of an oil fired boiler.
13. Load response is comparable to that of an oil fired boiler.

FLUIDISED BED COMBUSTION FOR BIO-MASS

The composition of Bio-mass is given in table–1. Ultimate analysis of bio-mass reveals that these fuels have very high oxygen content with high Hydrogen to carbon ratio. Also these fuels contain very low ash but these ash have a much lower fusion temperature, in the range of 950°C.

Thus bio-mass when burnt in fluidised bed combustors at a controlled bed temperature (800°C) will yield ash only in the amorphous form of silica, without causing slagging. Also bio-mass can be burnt in FCB with very low excess air at combustion efficiencies exceeding 99%.

Adiabatic combustion temperature of dry bio-mass exceeds 1800°C where as for wet bio-mass it is of the order of 900°C.

Thermo Gravimetric Analysis for Bio-mass reveals that combustion is complete at temperatures above 500°C.

BHEL'S AFBC COMBUSTORS BURNING BIO-MASS

BHEL has successfully burnt paddy husk, sawdust, wood bark and bagasse in their pilot plant AFBC combustors. Based on the experimental data, optimum parameters have been arrived at for designing AFBC combustors suitable for bio-mass.

BHEL has designed a hot gas generator using rice husk. Fig. 2 shows the general arrangement of the combustor. The heat output of this FBC combustor is 0.75 million Kcals/hr. The unit is being erected at the works of M/s. Pamani Fertilizers Ltd., Mannargudi.

BHEL has also undertaken the conversion of a bagasse fired stoker boiler into fluidised bed firing of bagasse at M/s. Shimbholi Sugars, U. P. The conversion is being carried out and the operating results will be available in the next few months. Fig. 3 shows the arrangement of boiler with fluidised bed combustion, the advantage of this retrofit will be the uprating of its capacity by 25% with increased boiler efficiency.

NEWER APPLICATIONS OF COMBUSTION OF BIO-MASS IN AFBC

BHEL has evolved some new concepts on the application of AFBC combustors burning bio-mass. They are

i. Billet heating furnaces.

ii. Lime roasting furnaces.

iii. Bio-mass gasification.

BILLET HEATING FURNACES

Paddy husk contains about 16% ash and a heat content of 4300 kcal/kg (db). Also the ash melting temperature of paddy husk ash exceeds 1600°C, Taking advantage of this peculiar characteristic, BHEL has conducted experiments in their pilot plant burning rice husk to reach a bed temperature of 1200°C for billet heating with rice husk ash as the bed material. The experiments are successful and further attempts are being contemplated to establish a billet heating furnace with AFBC concept. Fig. 4 shows the conceptual arrangement of a billet heating furnace utilising AFBC principle.

LIME ROASTING IN AFBC COMBUSTORS

BHEL has developed a conceptual lime roasting process making use of AFBC combustor. As the lime roasting process need a precise temperature control between 900-950°C AFBC Combustors can be suitably adopted. Also AFBC offers uniform heating. The useful heat in excess of 900°C liberated in the bed when dry bio-mass is burnt is absorbed by the process. The roasted product will come out in the form of powder which can be collected from the cyclones and the hot gases leaving at 900°C will be utilised for drying the limestone and bio-mass. Pilot plant studies will be taken up in the near future to test this concept.

BIO-MASS GASIFICATION

BHEL has come up with a conceptual design of a bio-mass gasifier as shown in fig. 5. By seeking necessary government financial support, a pilot plant may be built in the near future, for the exploitation of this technology to augument the low load stabilisation of boiler flames.

CONCLUSION

AFBC combustors can only burn the bio-mass at very high efficiencies and innumerable newer applications can be thought of, for industrial energy substitution making use of combustion of bio-mass in AFBC boilers.

TABLE — 1

COMBUSTION OF BIO-MASS

ULTIMATE	BIO-MASS	COAL
Carbon %	49.8	82
Hydrogen %	6	5.7
Oxygen %	44	9.2
Sulphur %	0.1	1.4
Nitrogen %	0.1	1.4

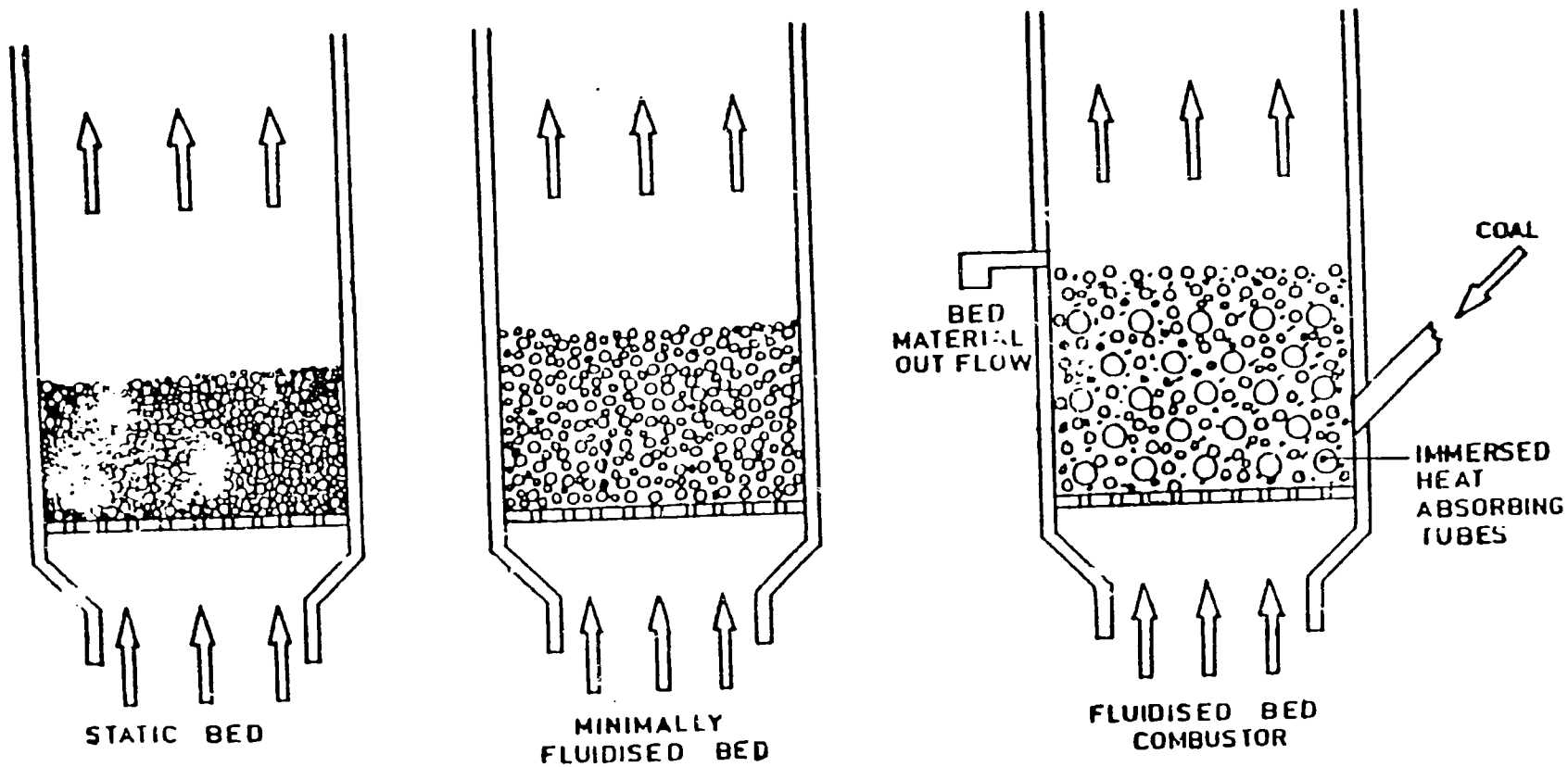

PRINCIPLE OF FLUIDISATION AND FLUIDISED BED COMBUSTION.

FIG-1

PAMANI FERTILIZERS RICE HUSK FIRED FBC HOTGAS GENERATOR

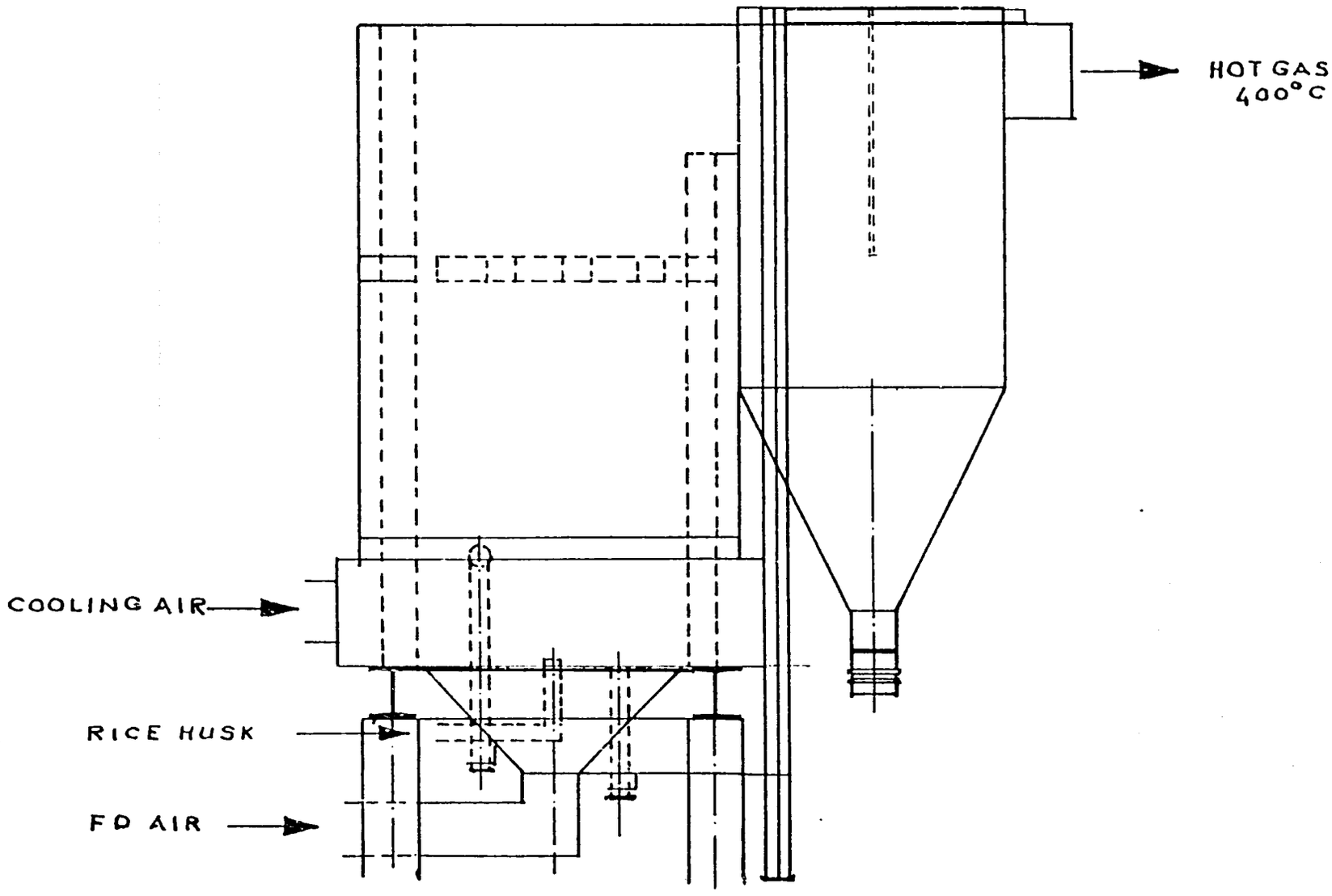

FIG-2

SIMBHOULI SUGARS U.P
(BAGASSE FIRED FBC BOILER)

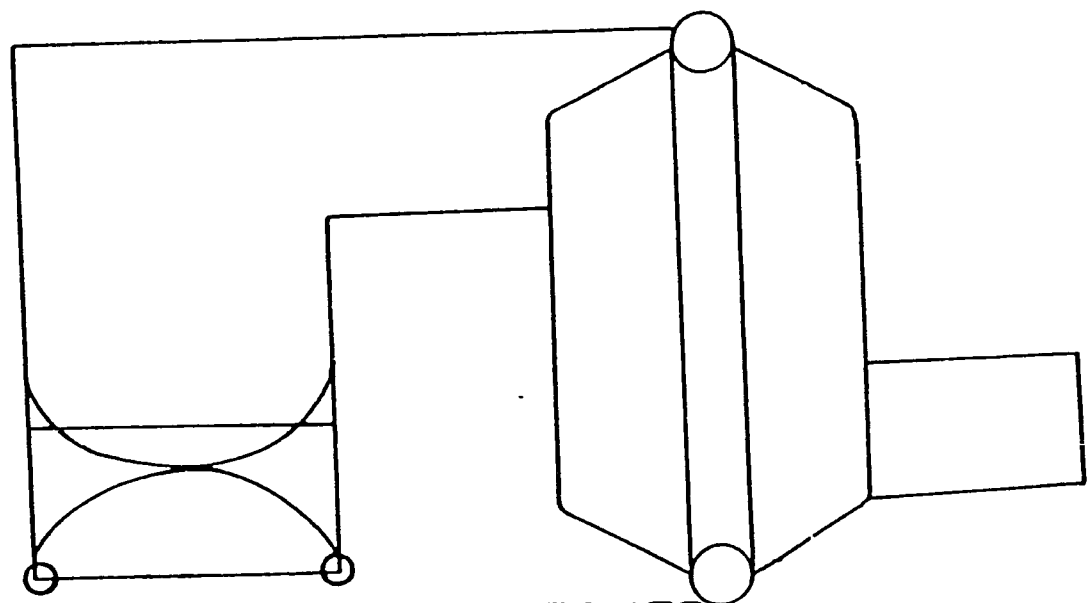

FCB CONVERSION FROM STOKER

OUTPUT INCREASE 20 → 25 t/h (Rs. 10 LAKHS)

EFFICIENCY INCREASE 8% (Rs. 5 LAKHS)

FIG-3

BILLET HEATING FURNACE

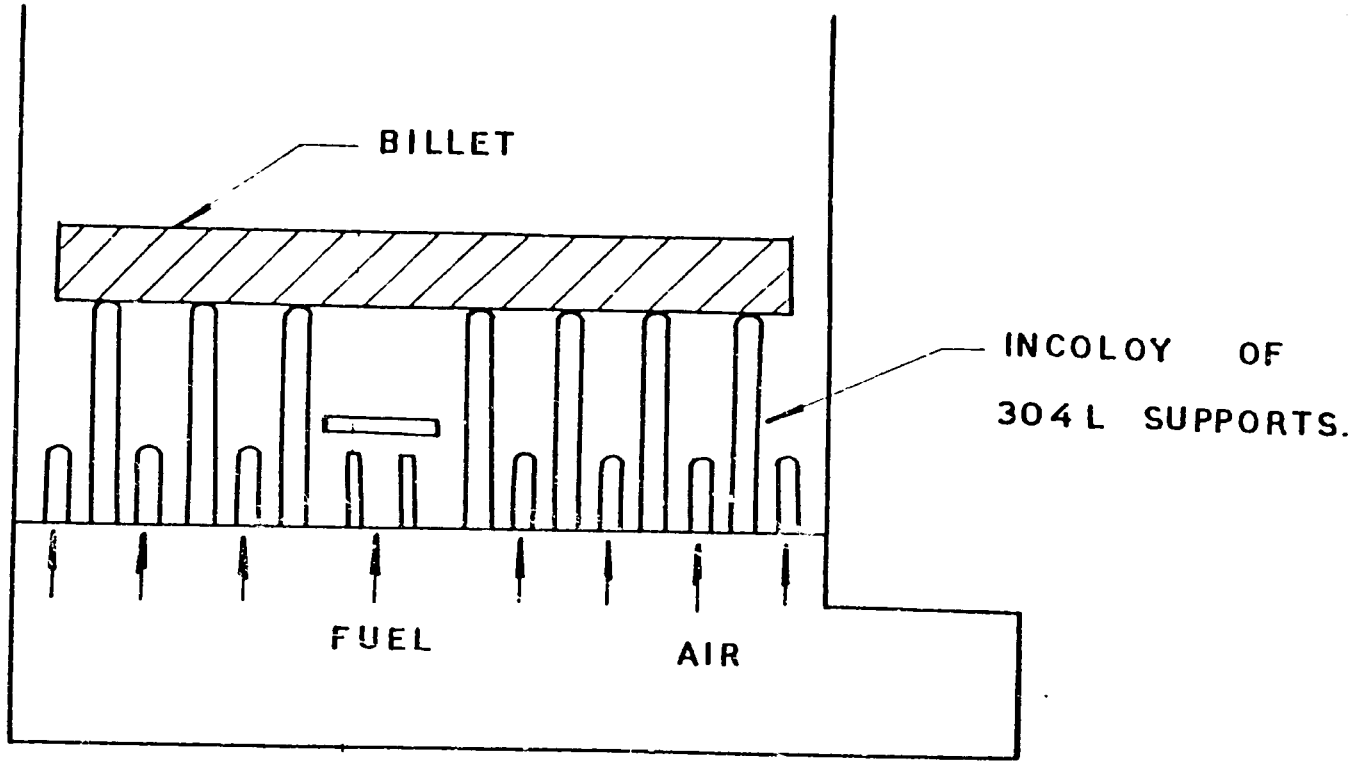

FIG - 4

BIO - MASS GASIFIER

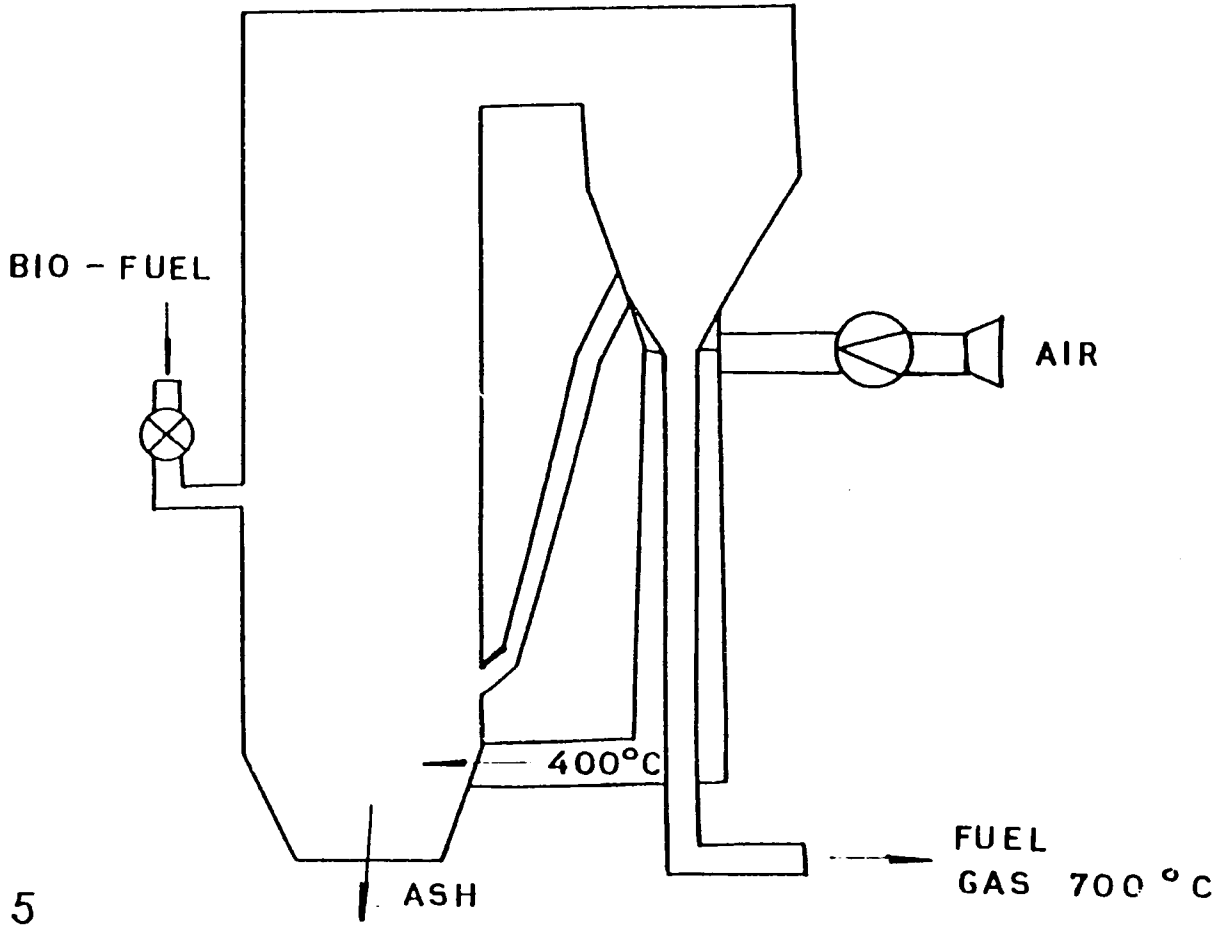

FIG - 5

TENNESSEE VALLEY AUTHORITY (TVA) INVOLVEMENT IN THE COMMERCIALIZATION OF ATMOSPHERIC FLUIDIZED BED COMBUSTION (AFBC) FOR UTILITY APPLICATION

Robert Q. Vincent
Tennessee Valley Authority
Chattanooga, Tennessee

INTRODUCTION

As the United States' largest user of coal (27.5-million tons burned in 1983), the Tennessee Valley Authority (TVA) is interested in developing better ways to utilize this energy resource. Atmospheric fluidized bed combustion (AFBC) is a promising near-term alternative to conventional pulverized coal burning for the TVA power system.

TVA's involvement in AFBC development began in 1974 and has addressed the major technical uncertainties through a comperhensive program of design, experimental, and analytical studies. A major milestone was reached in 1982 with the completion of a 20-MW AFBC pilot plant. This engineering pilot unit was designed to simulate utility power plant conditions and mechanical features. Full operations began in June 1982, commencing four years of tests under joint TVA/Electric Power Research Institute (EPRI) sponsorship.

20-MW PILOT PLANT DESIGN FEATURES

TVA constructed the 20-MW AFBC Pilot Plant at the Shawnee Steam Plant near Paducah, Kentucky. Included are coal and limestone preparation facilities, a solid waste storage area, the boiler building, chimney, baghouse, air-cooled condenser, and an office service building. The facility is self-sufficient, relying on the nearby power plant for only electricity and raw water. The plant is staffed by operators and technicians from the utility system. A full-time engineering and laboratory staff support testing.

The 20-MW Pilot Plant is an intermediate step between the small process development research units and commercial-size utility demonstration power plants. Its size, design, and flexibility allow for comparing and screening various options for fuel feeding, fly ash recycle, and control on commercial-size equipment. The basic unit arrangement is shown in figure 1.

Both underbed pneumatic and overbed spreader coal feed systems are provided. The bed area is large enough to simulate commercial unit process and operating characteristics. The fly ash recycle system has the capability to recycle either cooled or uncooled material at up to five times the coal feed rate. Water and steam circuitry and parameters simulate utility conditions. Table 1 summarizes the design parameters incorporated into the unit for testing.

Table 1

20-MW DESIGN PARAMETERS

	Design	Flexibility
Bed area (ft^2)	216	58,108,166,216,288
Superficial velocity (fps)	8	4, 8, or 12
Bed temperature (^oF)	1,550	to 1,650
Bed depth (ft)	4	to 6
Coal feed rate (lb/hr)	12,000	to 22,000
Steam capacity (lb/hr)	111,200	to 170,000
Outlet pressure (psi)	2,400	2,400
Outlet temperature (^oF)	1,000	1,000

OPERATING HISTORY

The first coal fire was in May 1982, and a full load, 24-hour operability test run was achieved less than five weeks later on June 6, 1982. The formal TVA/EPRI test program started on July 1, 1982, after over 300 hours of hot functional checks. The initial test campaign lasted until April 6, 1983, and accomplished the objectives of operator familiarization, equipment shakedown, data acquisition implementation, and base-case performance testing. There were approximately 1,500 hours of coal-fired operation during this time.

Following shakedown, testing began to evaluate system performance and unit operating characteristics using the two alternative methods of feeding coal and limestone (underbed and overbed). As of December 1984, approximately 10,000 hours of coal-fired operation have been completed. Approximately 1,500 hours have been with overbed coal feeding with the remainder being with underbed coal feeding. Both underbed and overbed limestone feeding have been tested. The coal used has been high sulfur Kentucky No. 9 with two different limestones tested, Reed and Fredonia.

20-MW AFBC PILOT PLANT RESULTS

Process performance tests have given encouraging results. Combustion efficiencies of 97 percent can be achieved with either underbed or overbed feeding by recycling fly ash material from the multiclones back into the combustor. Figures 2 and 3 show combustion efficiencies achieved for a given amount of recycled material (recycle ratio is defined as pounds of multiclone catch recycled per pound of coal fired). Combustion efficiency suffers considerably when feeding unwashed coal overbed with a significant fines content. These fines do not reach the bed and are elutriated out of the combustor and cyclone with insufficient time for complete combustion. The use of Kentucky No. 9-type coal overbed will require control and normalization of the fines to achieve consistent acceptable carbon burnup.

Sulfur capture efficiency depends primarily on the amount of fresh limestone in the bed, its surface area, and residence time in the unit. Increasing the rate of fresh sorbent feed reduces the SO_2 emissions almost immediately. Economics, however, require the calcium-to-sulfur ratio (Ca/S) be kept at a minimum. Unsulfated sorbent is elutriated out of the combustor and caught by the multiclones. This material, with the unburned carbon, is also recycled to the unit. Figures 4 and 5 show sulfur retention achieved for various Ca/S and recycle ratios for both underbed and overbed feeding, respectively. The results to date indicate that 90-percent sulfur retention can be obtained using underbed feed with Ca/S and recycle ratios on the order of 2 to 2.5. Overbed washed coal results show the same trend as underbed feed tests with a reduction in performance. The single-screened, unwashed 1-1/4 x 0 inch coal data, shown circled in figure 5, gave inconsistent and significantly lower sulfur retention due to the large amount of fines which burned in the freeboard. The SO_2 released here does not have the residence time nor the intimate solid-gas contact required for good capture. Washed coal on the other hand gave more stable operation and better performance due to control of the amount of fines.

Emissions of NO_x from the unit have been below the environmental limit for all conditions tested. Low combustion temperatures, on the order of 1,500°F, in AFBC units limit the generation of thermal NO_x to an insignificant level. Figure 6 shows the variation of NO_x emissions with excess oxygen in the flue gas. No special efforts have been made to date to lower the NO_x emissions.

Equipment and systems are being carefully monitored to develop a data base for design, operation, and maintenance planning. There have not been any major unresolved AFBC system-related problems.

Overbed feed has proved to be a relatively simple, high-availability feed system. However, consistent coal sizing is not practical, and a special feed preparation and handling system would be necessary to control fines to the level required for stable operation and acceptable process performance. Rocks fed with the coal tend to plug drain and disposal lines and can cause defluidization if allowed to accumulate in the bed. Special attention to coal preparation and/or mechanical design features which will add considerably to complexity and cost, would be required to prevent these problems.

Underbed feed has not been as reliable as the overbed feed system. Problems encountered include components and feed line plugs due to high moisture and large particles and excessive feed pump and feed line erosion. Modifications to the system have since improved reliability considerably and availability is now acceptable. Modifications included use of wear-resistent materials, special anti-wear designs, reduced transport velocities, and elimination of discontinuities and flow restrictions.

Erosion of in-bed tubes and supports has been within acceptable limits. Convection pass tube and supports are in excellent condition and have not experienced any erosion. No measurable corrosion has been found anywhere in the unit.

160-MW DEMONSTRATION PLANT

Based on the encouraging progress at the 20-MW Pilot Plant, TVA, in cooperation with EPRI, the Commonwealth of Kentucky, Duke Power Company, Combustion Engineering, Inc., the Department of Energy, and several other utilities, coal companies, and railroads has undertaken a follow-on project to design, construct, and test a AFBC 160-MW demonstration plant. The plant will be an add-on boiler adjacent to unit 10 at TVA's Shawnee Power Station with startup scheduled for 1988.

The Shawnee Steam Plant is composed of 10 pulverized coal (PC) units of identical size and design. The demonstration plant will be nominally rated at 160 MW(e) which corresponds to the maximum turbine output of unit 10. As shown in figure 7, the add-on AFBC boiler will be constructed beside the existing unit 10 as a replacement for that boiler and will utilize the unit 10 turbine generator set. The existing PC boiler will not be dismantled but will remain online during the construction of the add-on AFBC demonstration boiler and will serve as an alternate to the AFBC boiler. Existing auxiliary equipment will be used wherever possible, but new equipment (such as forced-draft fans and air heaters) will be required.

The AFBC boiler is designed to interface with the unit 10 steam supply to the existing turbo-generator, the flue ducting to the unit 10 baghouse, the unit 10 yard coal-handling equipment, and with various water systems.

The existing coal-handling system will be used through the transfer station adjacent to the unit 10 boiler building. At that point, a new conveyor will transport the coal to a new transfer station east of the AFBC boiler and then into the AFBC boiler building. The design basis coal is an eastern high-sulfur bituminous as typified by Kentucky No. 9. A complete limestone handling system will be added and will include a receiving hopper, crusher, and a screening system. Redundant crushing and screening systems will be provided for reliability. Once crushed to the appropriate size, limestone will be conveyed to the AFBC boiler building and stored in silos. The design basis limestone will be similar in activity to Reed or Fredonia. Alternate fuel or limestone will be tested within design limitations of the boiler.

Combustion Engineering, Inc., will supply the new 160-MW AFBC boiler. Designers will apply fully the engineering experience gained from the 20-MW Pilot Plant. The steam generator will be a balanced draft, drum-type AFBC boiler. It will supply superheated steam to the high pressure turbine at 1,815 psi, 1000°F, and reheated steam to the low pressure turbine at

445 psi, 1000°F. The boiler will be a combination top- and bottom-supported design with a flexible expansion joint in the convection pass. Fuel feed systems will employ underbed feed of both coal and limestone. Solids entrained in the flue gas will be collected with mechanical cyclone separators and a portion recycled to the fluid beds. Boiler efficiency is guaranteed to be 87.53 percent at a maximum continuous rating with a Ca/S molar ratio of 2.3, based on the design fuel and sorbents.

A 4-year test program consisting of shakedown, parametric testing, and an extended commercial demonstration run is planned. A 6-year commercial operation period will follow resulting in a total of 10 years of data acquisition.

SUMMARY

The 160-MW AFBC Demonstration Plant will join the 20-MW Pilot Plant that has operated successfully at the Shawnee station since 1982. Joint TVA/EPRI testing continues at the pilot plant with performance evaluations of large-scale AFBC components and systems, load control approaches, and coal feeding methods. The 160-MW demonstration unit will start up in 1988 and be operated in a controlled test program intended to fully commercialize AFBC for the utility industry.

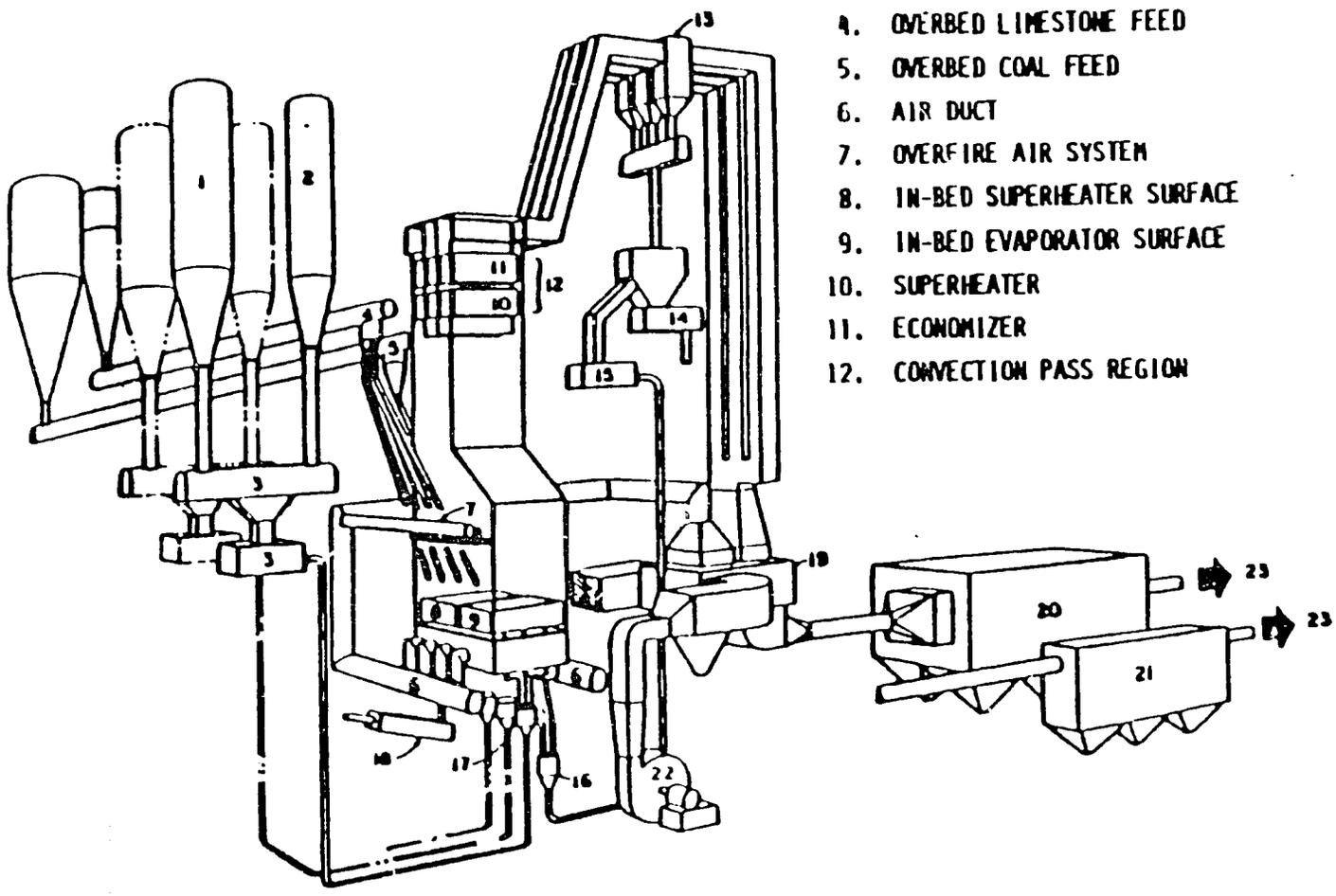

1. COAL BUNKER
2. LIMESTONE BUNKER
3. FUEL UNDERBED LIMESTONE FEED
4. OVERBED LIMESTONE FEED
5. OVERBED COAL FEED
6. AIR DUCT
7. OVERFIRE AIR SYSTEM
8. IN-BED SUPERHEATER SURFACE
9. IN-BED EVAPORATOR SURFACE
10. SUPERHEATER
11. ECONOMIZER
12. CONVECTION PASS REGION
13. CYCLONE DUST COLLECTOR
14. RECYCLE DRAIN COOLER
15. RECYCLE FEED PUMP
16. RECYCLE STREAM SPLITTER
17. FUEL STREAM SPLITTER
18. BED DRAIN COOLER
19. AIR HEATER
20. BAGHOUSE
21. ELECTROSTATIC PRECIPITATOR
22. FORCED DRAFT FAN
23. FLUE GASES TO BAGHOUSE

20-MW AFBC PILOT PLANT

FIGURE 1

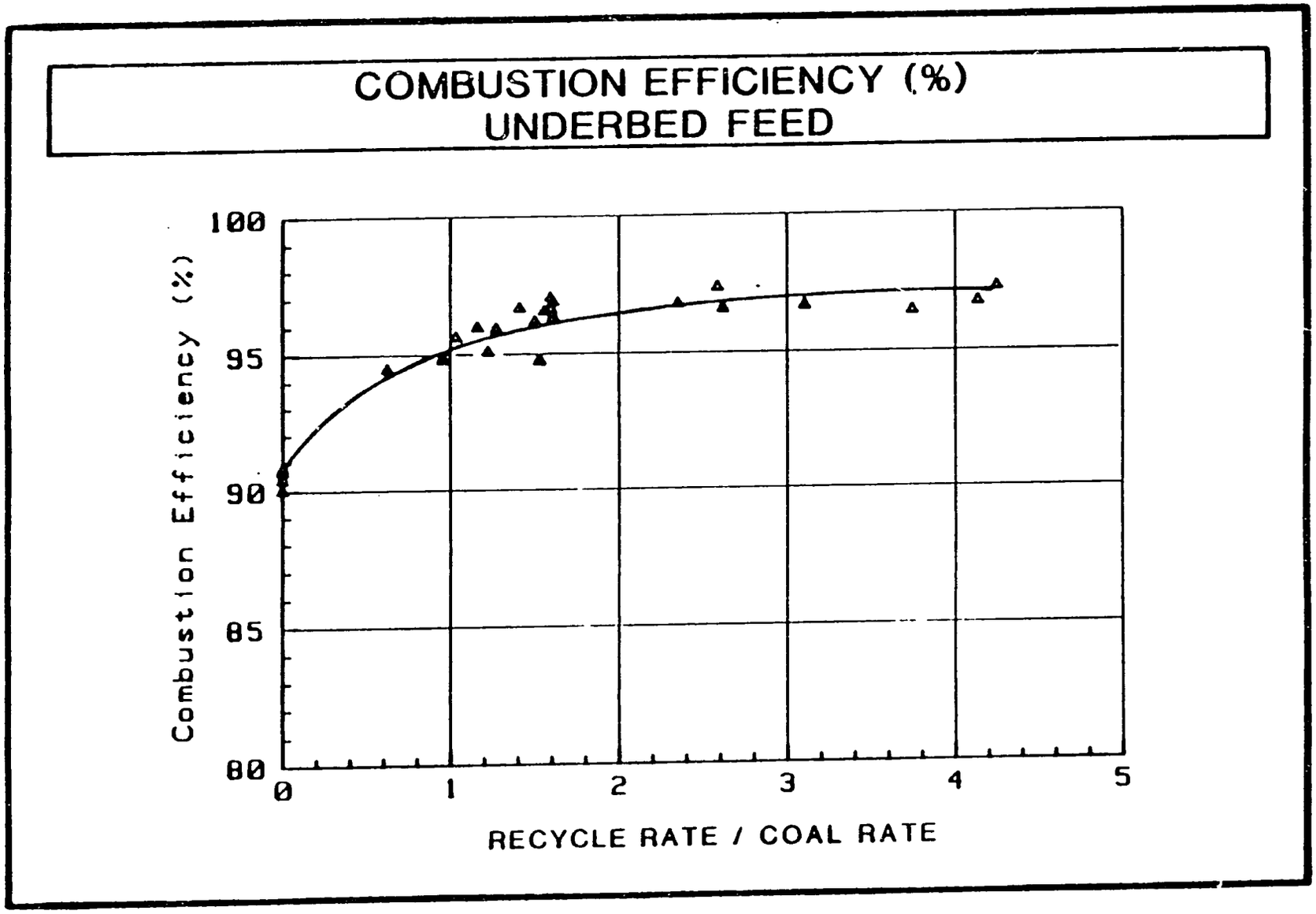
COMBUSTION EFFICIENCY (%)
UNDERBED FEED
Combustion Efficiency (%)
100
95
90
85
80
0
1
2
3
4
5
RECYCLE RATE / COAL RATE

FIGURE 2

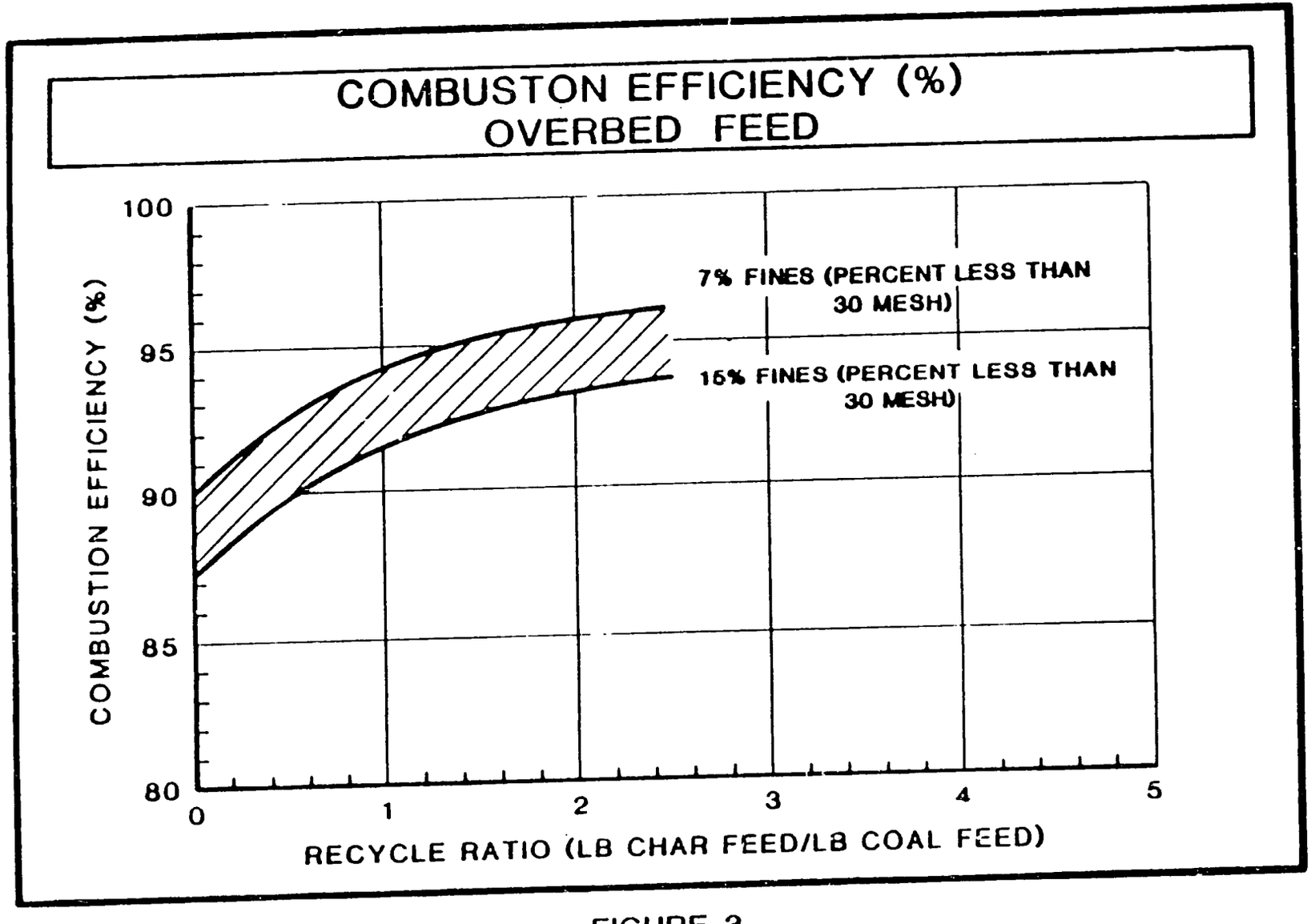
COMBUSTON EFFICIENCY (%)
OVERBED FEED
COMBUSTION EFFICIENCY (%)
100
95
90
85
80
0
1
2
3
4
5
7% FINES (PERCENT LESS THAN 30 MESH)
15% FINES (PERCENT LESS THAN 30 MESH)
RECYCLE RATIO (LB CHAR FEED/LB COAL FEED)

FIGURE 3

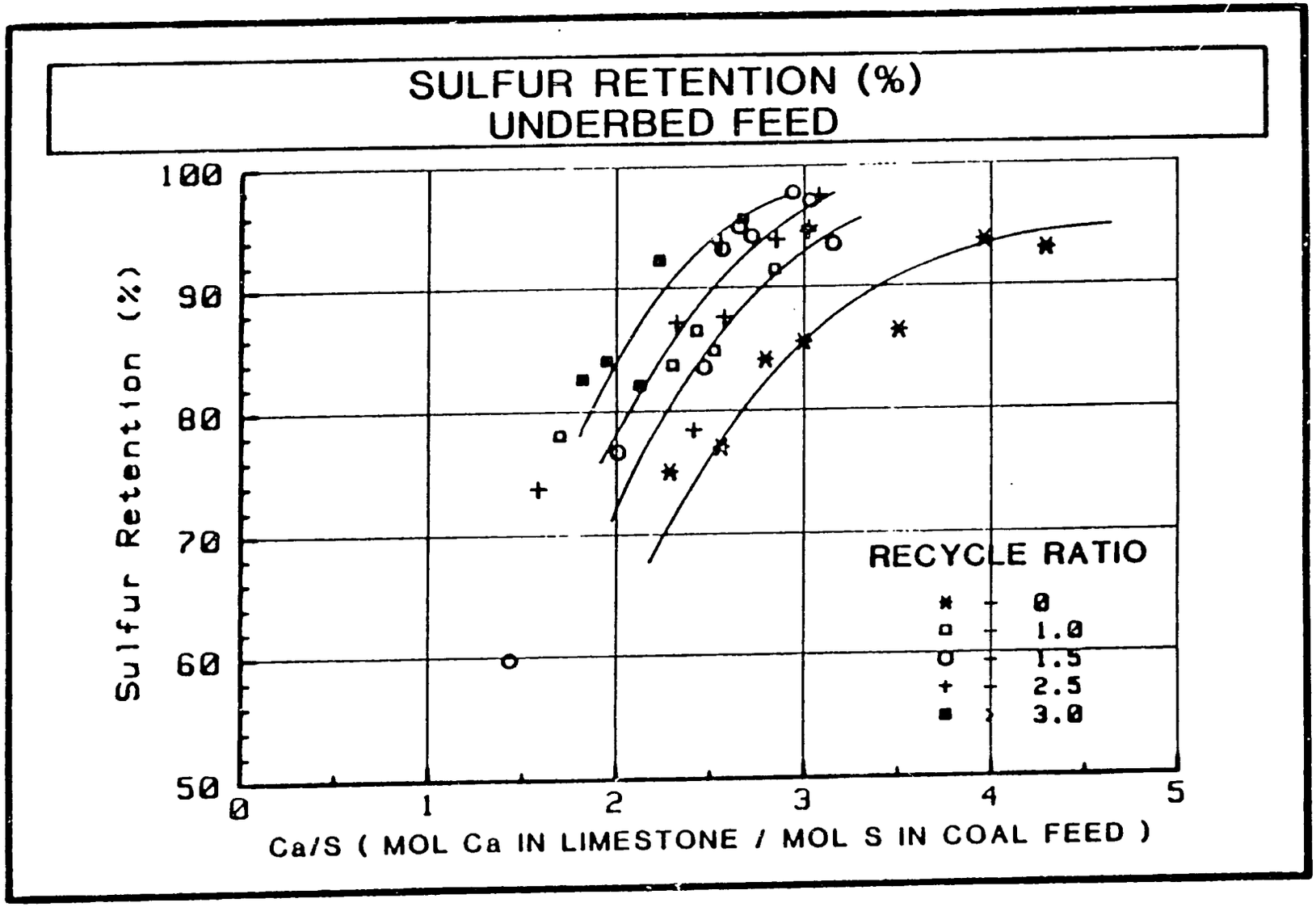
SULFUR RETENTION (%)
UNDERBED FEED
Sulfur Retention (%)
100
90
80
70
60
50
0
1
2
3
4
5
Ca/S (MOL Ca IN LIMESTONE / MOL S IN COAL FEED)
RECYCLE RATIO
0
1.0
1.5
2.5
3.0

FIGURE 4

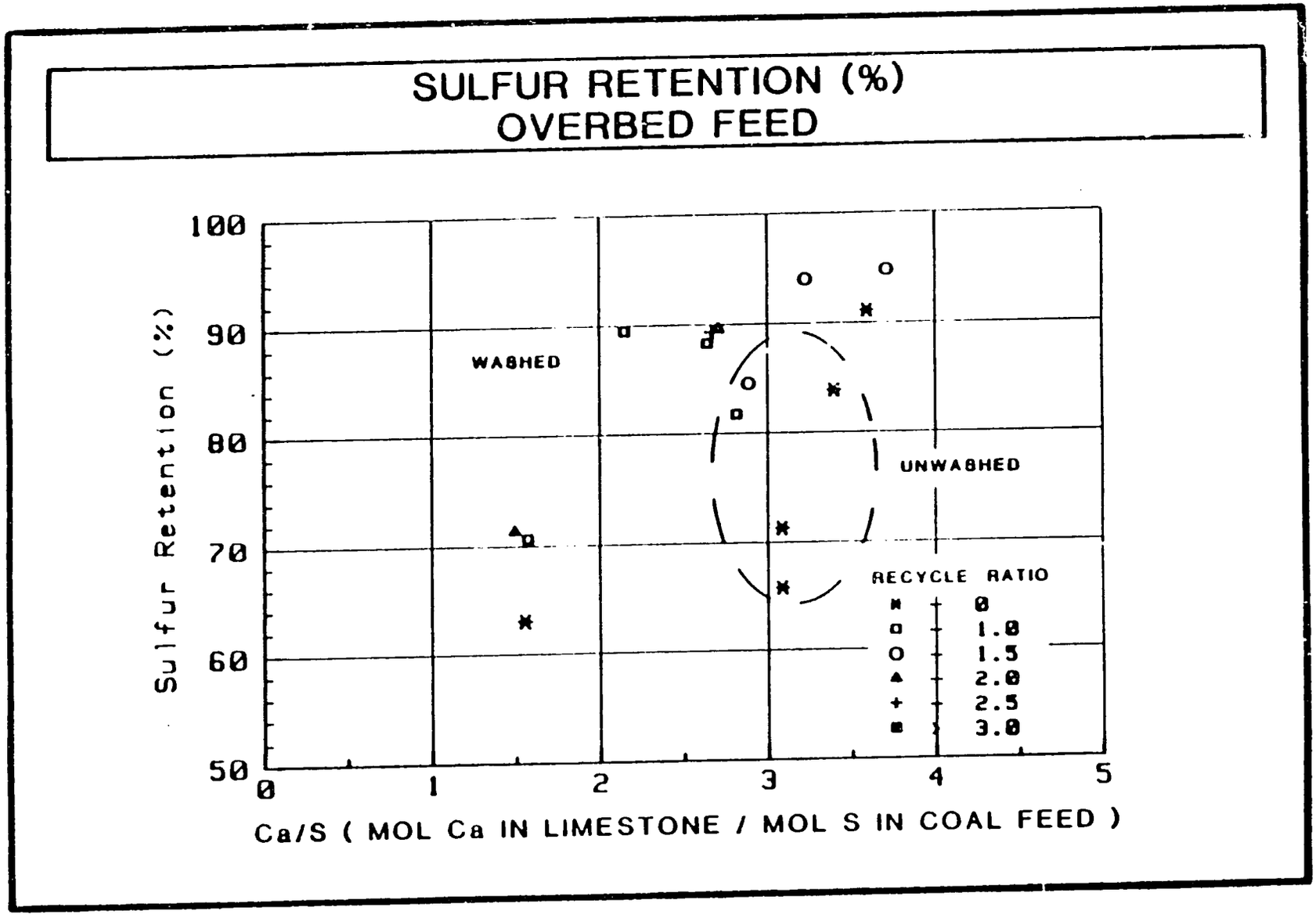
SULFUR RETENTION (%)
OVERBED FEED
Sulfur Retention (%)
100
90
80
70
60
50
0
1
2
3
4
5
Ca/S (MOL Ca IN LIMESTONE / MOL S IN COAL FEED)
WASHED
UNWASHED
RECYCLE RATIO
0
1.0
1.5
2.0
2.5
3.0

FIGURE 5

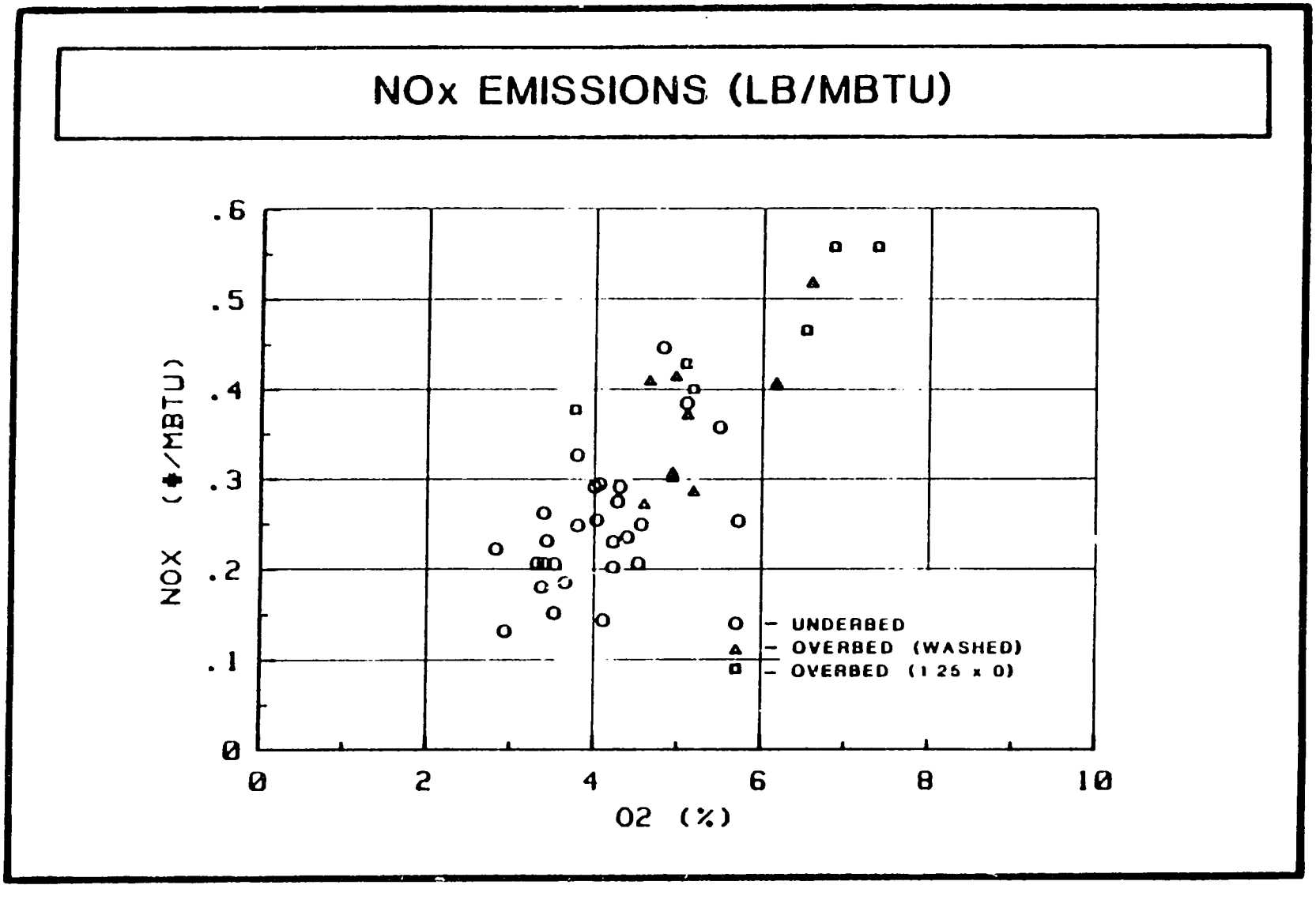
NOx EMISSIONS (LB/MBTU)
NOX (#/MBTU)
.6
.5
.4
.3
.2
.1
0
0
2
4
6
8
10
O2 (%)
O - UNDERBED
△ - OVERBED (WASHED)
□ - OVERBED (1.25 x O)

FIGURE 6

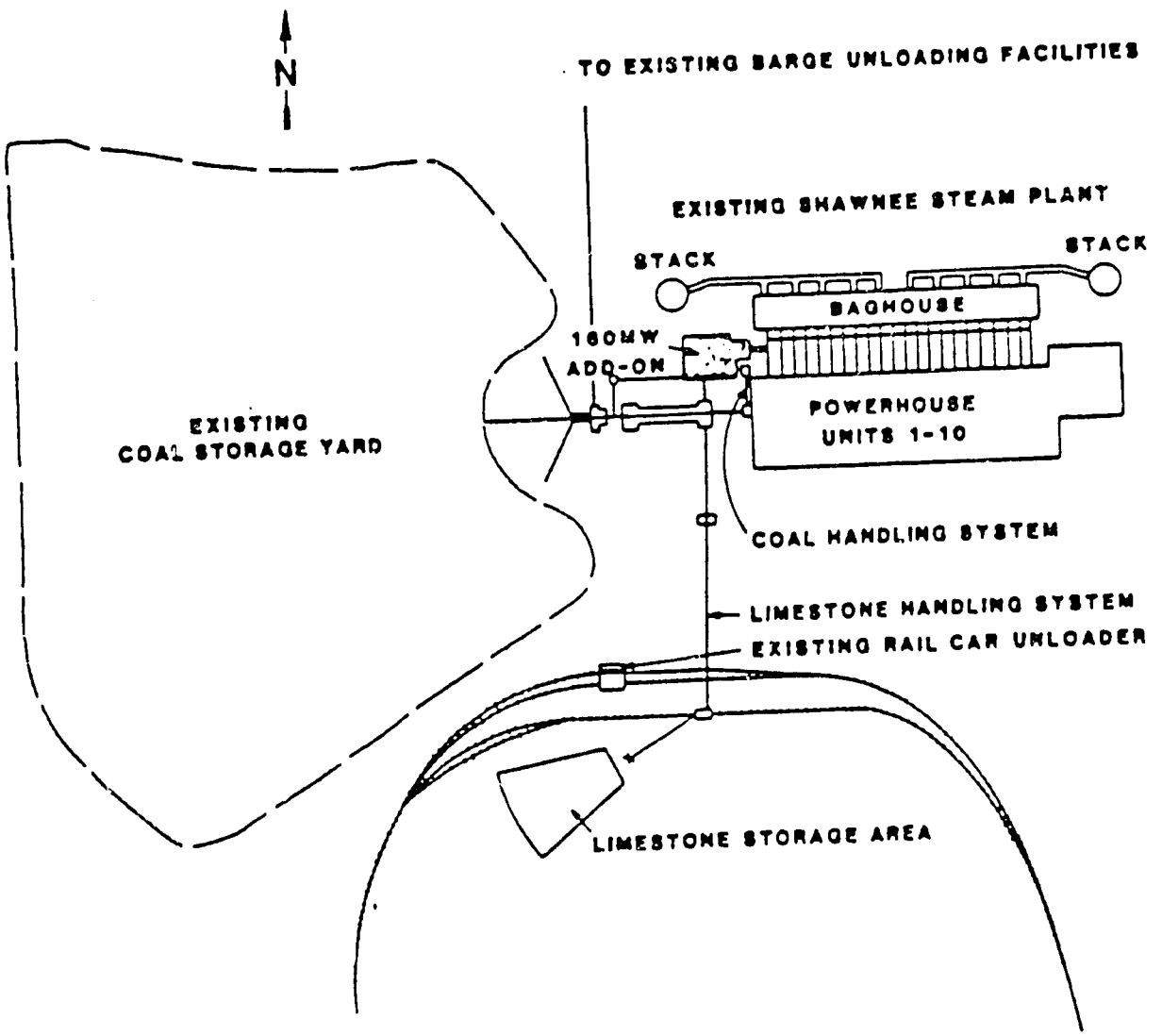

SITE PLAN - AFBC 160MW ADD-ON

FIGURE 7

QUESTIONS & ANSWERS

COMBUSTION SESSION, FIRST DAY

C: Y. P. Abbi: Thank you, Mr. Vincent. We are now open for questions.

Q: R. Vasudevan: What are the problems faced in the overbed feed?

A: R. Vincent: Basically it is the material you feed in which is an inch and a quarter top size. The problems come from the large material and the small material. The large material you are feeding in rocks, or ash material that is that size. When you mine the coal you get rocks that are an inch and a quarter. These build up in the bed and tend to defluidize the bed and you have to have a distributor plate that will take these rocks and move them to a drain or have multi drains in your unit to get rid of the rocks. On the small end, if you have too many fines it blows up into the freeboard and so all your combustion is occuring in the freeboard. You have much better heat transfer in the bed and that is where you would like it to occur. Also,

if the amounts of fines vary you have a lot of control problems in maintaining temperatures. If fines increase, all the heat goes into the freeboard and you have trouble maintaining the bed temperature so you have to feed more coal just to keep the bed temperature up.

Q: R. Vasudevan: Any marked changes in the combustion efficiency?

A: R. Vincent: Yes, that is why with the demonstration plant we decided to go to the underbed feed system. We received proposals from Foster-Wheeler, B&W and CE, and one of those gave us an overbed feed system and it was not acceptable for performance reasons.

Q: R. Vaidyeswaran: You mention the development of AFBC up to say the year 2000 or so. Any development on PFBC or is it being ruled out completely?

A: R. Vincent: It is not being ruled out totally, but TVA is not involved in any pressurized units but we feel that is a step for the future. We are looking for commercialization of fluidized bed combustion now and are putting all our forces on atmospheric fluidized bed combustion.

Q: B. K. Mazumdar: Did the rank of coal have any effect on the efficiency of combustion, and was there any emission of organics along with the particulates? What was the maximum efficiency of combustion?

A: R. Vincent: The maximum combustion efficiency achieved was around 98% and we reached this at a very early recycle ratio of around one and a half to two. Increasing recycle further really does not improve performance.

Regarding the effect of rank of coal on combustion efficiency, we have used just one type of coal.

Q: M. M. Sen: In this 216 sq. ft. bed, how many feedpoints are provided?

A: R. Vincent: Our normal design was one feedpoint for 18 sq. ft. We have also done tests for one feedpoint for every 27 sq. ft. and have seen very little degradation.

Q: S. Sundararajan: What are the main problems you have faced with this unit and the ones you are going to take up in your 160 MW unit.

A: R. Vincent: We feel that the technology is ready and that is why we are committing our money and others are ready to put their money on the line also.

PANEL DISCUSSION - FIRST DAY

Q: B. K. Mazumdar: Because of variations in natural moisture content -- bed moisture, seam moisture, mine moisture -- one coal may have a moisture content of 40%, and another 1%. Therefore, when you discuss coal, which coal? Is the natural moisture content of coal taken into consideration when you describe your coal/water mixture in terms of solids and water? Otherwise, all your calculations in terms of efficiency of combustion or the impact of water on the efficiency of combustion would go wrong. I would like to have your comments on this.

A: I think this aspect was dealt with by Mr. Malarkkan where he separated the losses due to the inherent moisture and the extra water we add in coal-water slurries.

A. Mr. Malarkkan: Naturally the water content is the total water content. We have not really talked about coals like peat or lignite wherein the moisture content is very high. We have not talked about such coals, but only the bituminous and subbituminous coals having a moisture

content of roughly 10 to 15%.

C. B. K. Mazumdar: But, excuse me, even in subbituminous coal, depending on what you do in the dispersion of coal in water, the natural moisture content can be 20-25% which is quite sizeable. Then again, even with dry coal, in situ 40-50% by weight of coal, water is generated in the process. There are a lot of points to consider to compute the efficiency vis a vis the water content in the fuel.

A: The inherent moisture is of the order of 2 to 6%. Most of the water is surface moisture and this moisture is taken into account along with the inherent moisture. So only the special fuels --the very high moisture fuels -- may have a little chance of subjecting themselves to such a slurry combination.
But otherwise we include definitely the surplus moisture of the order of about 20% as moisture already available for slurry.

Q: P.V.N. Sharma, BHEL, Trichy: What is the stability achieved and how do you measure the stability of coal-water mixtures? What is the amount of additive used and is there any relationship between the ash content and the additive that is there? What is the

size of coal used for 65% concentration?

Q: Mr. Malarkkan: You ask what is the stability achieved and how do you measure stability? We cannot really quantitatively measure stability as yet but, qualitatively, we find the stability by taking the density of the sample from different parts. There are other methods for which we do not have the apparatus now. There are two types of stability -- stoke stability and serenity stability. By the latter I mean that in coal/oil slurry when kept, due to the natural attraction of the particles, the particles slowly agglomerate and the clear liquid comes to the top so that it is visible. The natural tendency of the particles to agglomerate, to flocculate, is always there. You can partly minimize this but in time it agglomerates. So, in our case, in five to six days time we find that the clear liquid comes out at the surface. As a specific answer, we could not quantitatively measure the stability. In the sample I have seen you can definitely see that, in the whole day it is kept, there is no settling.

What is the amount of additive used? Is there any relationship between the ash content and the additive? The amount of additive used is less than 1%; in fact,

there is more than one type of additive, one a dispersing agent and one a stabilizing agent. They may be preservative or anti-foaming. There are a number of additives we add but the total is less than 1.5%. There are relationships between the ash content and the additives, but we have not studied this in detail. It is very case-dependent because all coals are not alike and do not behave equally, so the surface phenomenon of the coal, as well as the ash characteristic composition of the coal, is important.

What is the size of coal used for 65% concentration? That is given in the paper -- 97% passing through 200 mesh, that means less than 75 microns. That is more or less conforming to the pulverized coal.

Q: Mr. Chaudhuri of URJA: I would like to know more on the possibility of transportation of coal-water slurry for decentralized generation.

A: This is a concept many people are now considering, but I don't think that this concentrated coal-water mixture can be pumped for a long distance. What can be done? One can transport a coarse-coal slurry through a pipeline and, at the receiving end. One need not dry it. It can be wet ground, properly mixed through

additives, and then burned directly. But, at present, what is done is that coarse coal is transported through a pipeline and, at the receiving end, it is dewatered and dried then burned. So, coarse coal-water slurry can be transported, dewatered and drying is not necessary. Wet coal can be dispersed in a minimum quantity of water and it can be burned like a liquid coal. People are thinking of doing it this way, whereby the drying stage in the bi-plant transportation of coal can be eliminated.

A. Dr. Krishnan: Just before I left, at Morgantown Energy Technology Center they were starting on a program to burn coal-water slurry in fluidized-bed combustion. I think the shakedown is going on and no results have been published, and this is strictly some information I have gathered. But you can go up to a top size of 3mm and when you say crushing to less than 200 mesh, that really scares me because it takes a lot of money to make something so precise and it involves a lot of energy. The question now is, what is the top size you can burn? I think there were some tests done at in a PFBC in a 20 MW rig and they have demonstrated that you could burn up to 3mm. That is the top size in the state-of-the-art. Even with the 3mm you cannot transport or pump the coal long distances to get it

from the tank to the combustor. The distance has to be very short, and most of the problems have to do with plugging in the lines and the elbows. So they are considering that and, as we were discussing in the lab, if this should really take off and you want to still feed the 3mm size particles, someone should come up with a way to do away with the additives and make it a very cheap process. The ingenuity will be how you are going to feed the slurry -- maybe you are going to have to come up with a system where you bring it up and have like a centrifuge and then swirl the coal around and feed it like a overbed, except that you swirl it around and because of that it will burn before it goes to the bottom. So a lot of thought, I think, should go into developing a combustion system to the burner configuration as well as how to get the coal-water slurry in the combustor. I think that is the main thing. Once you get it in the combustor, it is going to burn, but how to get it without settling and still do away with the problem of crushing and grinding and adding additives? I think an approach like that will be very beneficial, not only here using 70% ash high washery rejects, but also in the States and other places. I thought I would just add this comment because my thinking is along these lines -- to develop a feed system for the slurry and give me any particle

size and then see what you can do with the worst case.

C: Y. P. Abbi: It is very clear that, in this coal-water mixture, the end use has to be kept in mind. If you want to make a coal-water slurry, transport it by tankers and burn it in existing oil-fired boilers, slightly modified, then you have to go for fine grinding and make a slurry of that nature. If you are able to consume the slurry immediately in a fluidized bed combustor, as Dr. Krish is saying, then it can be of the higher particle size. Now, I have some more questions but, our friends from America are here but I do not find any questions to them directly. I would like the audience to raise questions. We are here, we are available in India any time for you to ask questions but they are not going to be here too long so I would say if you have any questions to them please direct those questions. I request you to come to the mike.

Q: I would like to know from the American participants about the IEA fluidized-bed program because the IEA membership is limited to the developed countries and what I found is that IEA is very secretive about their work on fluidized bed. What can be shared and what can be learned?

A: R. Krishnan: It is hard for us to get information also, and we get most of our information from DOE.

I think IEA is more on a commercial basis, and a lot of the information is classified. In putting up plants like Grimethorpe a lot of money has gone into it and different countries are involved and they like to keep their technology to themselves, at least to some extent. But, unclassified information is available in USDOE reports.

Q: There was a conference in St. Louis in August. Are you familiar with that?

A: Dr. Krishnan: We have the coal abstracts that come every two weeks. IEA abstracts. Most of the reports I have been able to get without going through too many processes. Now, the USA is a member of the IEA and we have a representative in our Laboratory. Every two years there is a man deputed to IEA in London. I think the information is available and I am pretty sure here are at least a hundred reports on the PFBC that have recently come out. I am just using a rough number, but there are all kinds of reports on implementation and instrumentation, distribution, etc., going very much

into detail and I think well documented, and available through the National Technical Information Service, for a small fee of six or seven dollars. You can get most of the reports on PFBC and I would suggest you write to IEA directly and ask if they have any immediate information. The reports are there and available.

Q: Mr. Mazumdar: Regarding SO_x and NO_x emissions and prevention by fluidized bed combustion in the utility for the 20 MW unit that you have described, and the demonstration plant coming out in the future, the limestone bed is used to keep down this SO_x/sulfur trioxide emission. After some time there is a buildup and calcium sulfate is formed, at which point the bed is changed over to a new bed. I would like to know whether the calcium sulfate decomposes catalytically even at the lower temperature of 850 or 900.

A: Basically, what we do is maintain a certain bed level in our unit to keep the tubes submerged and, based on that, we feed a certain calcium sulfur ratio. You can feed a continuous stream of limestone with the coal and that dictates what kind of sulfur capture you get, and also the amount of recycle that you put back in impacts how much sulfur you capture. It is not something you

just turn off and on -- you have a constant flow of limestone.

Q: Regarding the erosion of in-bed coils, here in India we have taken long-time measurements and even after 15 thousand hours of operation there is not even 0.1 mm of erosion in the in-bed coils, whereas the experience in the U.K. has been different. In many boilers the erosion has been almost nil but in a few boilers there were even punctures because of the erosion. What is the experience of TVA regarding the bed tube coils?

A: Let me get into the performance first. This is a slide of combustion efficiency vs recycle ratio. As I mentioned earlier, our feed point spacing is one per every 18 sq. ft. of bed area -- the three feedpoint curve that is shown there. The triangles are the data points we used for 2 feedpoints per compartment, or one for every 27 sq. ft. You can see that, as recycle increases, combustion efficiency also increases. But once you get above a recycle of around 2 -- the recycle ratio is how many pounds of fly ash material you are putting back for every pound of coal you are feeding into the boiler -- you start to reach a diminishing return.

Here is a curve of sulfur retention. In the U.S. we are required to absorb 90% of the sulfur, or 1.2 lbs. per million Btu is the emission limit. So this curve is what it takes to get 90% capture and, for zero recycle, we are having a feed of about 3.5 moles of calcium for every mole of sulfur. As you increase recycle ratio, it helps out on the sulfur capture. Again we plot few feedpoint curves, subject to the type of stone you are using and also the bed temperature. If your objective is to capture the sulfur, then you will have to stay around 1500 and 1550F. As you go off that temperature on the low end, sulfur capture decreases rapidly. On the high end, it gradually tapers off. There are similar curves for underbed and overbed on the performance. Overbed is worse but the same trend is there. On the subject of erosion in-bed, we have boiling water tubes and superheat tubes in the bed. We started out with a Reed limestone and we are getting on the order of 3 to 3.5 mils per thousand hours of operation -- a mil being .001 inches. We have about 3.5 mils per thousand hours on boiling bank surface. These are the carbon steel tubes that are in the bed. The superheater tubes are stainless material 304H and to date, 10,000 hours, we really haven't seen any appreciable erosion. Tubes tend to develop an oxide protective layer which prevents erosion from occurring

on the in-bed superheater tubes. On the convection pass, 10,000 hours of operation, gas velocities between the tubes on the order of up to 70 to 80 ft/s have shown no erosion. And going to the Fredonia limestone, the erosion rates are now down to less than a mil per thousand hours. It's a softer stone -- and we have been able to pick that up all the way from out in the yard where we have a hammermill crusher -- we used to have to rotate our hammers because of the wear and now we can run a lot longer without having to rotate the hammers on the crusher --it takes less horsepower to crush limestone. It's a softer material - it elutriates a little bit more but the performance is even better than the Reed limestone so far as sulfur capture is concerned.

Q: Can you say that this erosion is mainly due to the lime, because, when we did not add any lime in the fluidized bed, there was practically no erosion? In fact the black color of the tube does not change.

A: Yes -- we have run only one type of coal so we are comparing two different limestones and there is a tremendous difference. I am not saying you could not get some typical silica or pyrite in the coal that might cause erosion also.

Q: About the choice of AFBC for the 160 MW which is going to be built in the USA, did they consider the CFBC even in the context of sulfur capture? Whatever Bob was saying they could achieve with a 3.0 recycle ratio, the ratio in the CFBC is something like the order of 2. I understand that with 1.5 we could achieve the same sulfur capture as well as achieve very high combustion efficiency. I would like Mr. Vincent to give us his views on CFBC vs AFBC as a choice.

A: The 160 MW demonstration plant of boiler specifications was drawn up by TVA, and EPRI was also involved, and it was limited strictly to AFBC designs and so was not open to circulating beds. At TVA the position now is that AFBC is a proven technology and it is just a matter of demonstrating to the utilities so as to get the orders coming in. Circulating bed, Pyropower, Lurgi and others are boasting a lot of claims, but I have seen very little data that circulating beds do have the very good potential that they claim.

C: In this context I would like to mention that Alstrom has quite a number of orders for CFBCs and Lurgi too, so it is already in the market.

C: Yes, Colorado Ute, another utility in the States, has provided a contract to Pyropower to build a 110 MW circulating bed so EPRI is really involved in three different demonstration projects for fluidized bed. We have our own AFBC project, 160 MW; at TVA, we have a Colorado Ute 110 MW circulating bed, and Northern States Power has a retrofit unit they purchased from Foster-Wheeler -- that is an overbed feed system. The orders are coming in and Pyropower is selling units. In Canada, Nova Scotia Power is building a 20 MW circulating bed unit.

A. At this stage, you really cannot distinguish which is better. The development has to go on side by side. TVA may say that bubbling bed is right and others might say, from the standpoint of techno-economics, that circulating bed is preferred. So I don't think at this point we can make a clear-cut distinction as to which technology we should adopt. It all depends on the techno-economics and the individual experience which we have.

Q. I would like Bob Ichord to give his views on this coal program which is going on between USAID and India. He is the Program Coordinator from USAID Washington.

as well.

Third was the problem relating to the supply of traditional fuels for rural development, as well as the problems of deforestation and land management that are very important and referred to this morning by Maheshwar Dayal.

As a result, we basically developed a program that focused on coal conversion technologies, biomass conversion technologies, energy conservation in industry -- a program that is going to have a series of meetings in the coming two years looking at energy conservation in specific industries. The collaborating institution in India is the Association of Indian Engineering Industries and that may be of interest to a number of you. Mr. Tarun Das is the Secretary and will be helping to work with our counterpart, the National Academy of Engineering, in arranging some of that program. Then we had a program on biomass production mentioned this morning, which would help to carry out research on fast-growing woody biomass and its applicability to different locations in India both north and south. Going back to coal, the program is extremely important in terms of the future of Asia, which I have worked in for the last fifteen years.

A: Mr. Ichord: One of the reasons I came is that I wanted to go into depth on the status of the program, and so far I am pleased with what I have heard. I might backtrack, since I was involved in the initial discussions several years ago in terms of the structure of this project, which is really the second collaborative energy project with India. I would like to point out that, at that time, there was a clear recognition of the three goals that were of importance in terms of the development of the program. One was to try to deal with the problem of oil imports, which was clearly very important. You will recall that India was importing $4 billion worth of oil in 1980. The situation has improved somewhat, down to a couple of billion dollars this year, but it is still a major problem and is important, given the fact that the growth in India will require a tremendous amount of energy of all kinds, both oil and coal and other sources as well. So that was a major goal and coal is a critical element in that process -- in the power sector, industrial sector and others.

The second goal was improving the efficiency of energy use, and that is not confined to the modern sector but is related to the efficiency and use of biomass fuels

Seeing what has happened in Asia with regard to the importance of coal as a substitute for oil, and as a major source which countries will depend on in the future, has indicated to me that the potential and the changes in technologies will be dramatic. Certainly India has been and will continue to be in the forefront of this development just as in the U.S., with our large coal base, we will be continuing to have a major program on all phases of coal technology. Certainly the work in all areas of this program is going to be critical. I think that the problem India faces in terms of the high-ash coal is of particular importance and is a severe case, but other countries in the region are also dealing with lignites and poor quality coals so that the issues as to how to improve the efficiency in the use of these coals and what are the technologies available for doing this are of great importance. In particular, we are involved in other programs to look at the feasibility of coal-water mixtures. In the Philippines, for instance, we are doing a major feasibility study on the demonstration of the coal-water facility near Manila. We also have a program in Indonesia that will be working to develop boiler technology with an arrangement similar to that you have here with BHEL and Combustion Engineering, using their indigenous coals.

Going back to my statement of the importance of the work here, it is clear to me that what is happening is that growth in the coal industry is just beginning and the market is enormous. To the extent that we have moved toward the demonstration of these technologies and shown other countries in the region that are not so advanced what the possibilities might be, they will be in a better position, as we all will, to make decisions with regard to how to spend limited investment capital in this area. If you look at what is happening in a difficult financial situation, the decisions are very tough as to how to invest capital in the energy sector, which has already taken a very large percentage of government budgets in most countries. A very high priority in our efforts is the extent that we can use indigenous resources and use them more efficiently and expand the availability of power and energy for national development of both agriculture and industry.

So I applaud all the work of the scientists and engineers here and will again be having more detailed comments in terms of the different sub-projects after I have had a chance to hear and talk with you all.

C: Dr. Abbi: I would like to thank all of the authors who took so much pain in preparing the papers and giving the presentations.

I would like to thank the organization for giving me this opportunity for chairing this session. I have enjoyed it and found it very informative, and I have learned quite a few new things. I thank you all once again.

END OF FIRST PANEL SESSION

DR. SIDHU'S ADDRESS IN HONOR OF PROF. B. K. MAZUMDAR

On the evening of February 4, a dinner was held honoring Prof. B. K. Mazumdar for his contributions to the field of coal science. On the behalf of the Pittsburgh Energy Technology Center, Dr. G. S. Sidhu, recently retired Director General of the Council of Scientific and Industrial Research, presented Prof. Mazumdar with a plaque. Following are Dr. Sidhu's remarks on this occasion.

Ladies and Gentlemen:

I consider it an honour and a privilege to be invited to speak this evening to felicitate Mr. B. K. Mazumdar, who is today India's most renowned Coal Scientist.

Mr. B. K. Mazumdar was born on February 1, 1925 at Kushtia (now in Bangladesh). He had his early education at Calcutta and studied at the Presidency

College and University College of Science and Technology, Calcutta, for his B.Sc. (Honors) degree in Chemistry and M.Sc. degree in Applied Chemistry in 1944 and 1946. After a brilliant academic career, he started his research at the Indian Institute of Science,Bangalore, in 1947 with the well-known organic chemist, Dr. P. C. Guha. After a short spell of teaching as Lecturer in Chemistry at Vidyasagar College, Calcutta, he joined CFRI in 1949 and worked for the first seven years in the Regional Coal Survey Stations at Jharia, Ranigunj and Ranchi. He then shifted to the main Institute and his meritorious work led to his promotion as a Distinguished Scientist and Director of this prestigious institute.

Mr. Mazumdar has nearly a hundred original research papers, technical reports, and patents to his credit, and is a recognized supervisor for Ph.D. by Calcutta University and Indian School of Mines, Dhanbad. He is a member of several learned societies and member/chairman of numerous technical committees. He has been invited to several international conferences. He was invited in 1960 by the Union Carbide European Research Association, Brussels, to attend a round table conference on coal science to present a paper on coal structure. In 1964 he attended, on invitation, the

American Conference on Coal Science held at Pennsylvania, and presented a paper on chemical constitution of coal. He represented India at the Gordon Research Conference in the USA in 1982, where he expounded his new concepts on system, structure, and behaviour of coal.

The work of Mr. Mazumdar and his younger colleagues in CFRI is too well-known for me to recount. Suffice it to say that it is internationally recognized and referred to as the "Indian School of Thought." It is frequently cited in learned journals and has been extensively reviewed in standard textbooks on coal, and was referred to in Kirk-Othmer's Encyclopedia on Chemical Technology as early as 1967.

His studies on coal constitution broadly relate to the determination of functional groups in coal and their effect on behaviour of coal, the mechanism of oxidation of coal leading to the different structural parameters like aromaticity of carbon and hydrogen in coal, and dimensions and disposition of side chains in coal structure.

His work on the interrelationships of coal properties and the new systematics of coal, correlation of

intrinsic properties of coal, and proximate analysis have led to a new grading system and pricing of coal. His contribution to the assessment and elucidation of several structural parameters of coal, mostly by chemical methods, and the concept of depicting the genesis of coal from lignite to anthracite in terms of four models designed to portray the transition during geochemical evolution is considered a breakthrough in coal science. His concepts have of late been corroborated by scientists in other countries by application of physical methods and structural models.

His R&D studies on coal utilization have also been as rewarding as his fundamental work, and I would like to refer particularly to his investigations on shipment of Indian coals for export vis a vis their susceptibility to spontaneous fire hazards. His contribution to formed coke technology won him the Metallurgists' Day Award for 1969. He is the first recipient of the prestigious Senior Coal Scientists Award (1979) of the Department of Coal, Government of India.

My association with him at a personal level has been most enjoyable, and his congenial nature, his cheerfulness and ebullient enthusiasm and other personal attributes have endeared him to everyone.

I am sure you will all join me in wishing him good health and cheer and many years of fruitful work ahead.

BENEFICIATION OF DIFFICULT CLEANING COKING COAL

A. K. Chakravarti
Central Fuel Research Institute
Dhanbad, India

BENEFICIATION OF DIFFICULT CLEANING COKING COAL

A.K.CHAKRAVARTI
Central Fuel Research Institute, Dhanbad 828108

1. INTRODUCTION

The coking coals of India have, in general, difficult cleaning characteristics and in majority of cases the ash content is high. Due to these, the yield of clean coal as obtained by beneficiation in the conventional manner is low. In fact, the average yield of clean coal at present produced in the eighteen coal washeries operating in the country is hardly 55 to 60 percent and in future, the yield is likely to go down with the progressive deterioration of the quality of the coal mined. By washing Indian coals, in conventional manner, a good percentage of by product as middlings/sinks with ash content 40-50 percent is obtained which do not have direct use in metallurgical coke making. Studies at CFRI have indicated that clean coal to the extent of 50 percent on the yield of middlings/sinks can be recovered by finely grinding followed by beneficiation by suitable technique. Thus, by retreatment of the by product, it may be possible to increase the yield of clean coal to the satisfactory level from Indian coking coals.

2. BENEFICIATION CHARACTERISTICS OF COAL

Indian coking coals have high percentage of near gravity materials (NGM) at the sp.gravity of cut for separating the cleans with 17 to 18% ash. The yield of clean coal, sp.gr. of cut and NGM% for various sources of coking coals are

contd.....

presented in Table 1 for prime and medium coking coals. It may be observed that the specific gravity of cut lies approximately between 1.45 and 1.50. The NGM% is as high as 40 to 77 and the yield% 14.5 to 70.5.

3. INFLUENCE OF CRUSHING PRIOR TO BENEFICIATION

Studies have shown that by crushing coals to smaller sizes prior to beneficiation, somewhat increased yield of clean coal due to liberation taking place with the reduction of N.G.M%. The results on influence of crushing are presented in Table 2.

4. BENEFICIATION OF CRUSHED COAL

The extent of smaller crushing at present practised for coal beneficiation in India corresponds to 13 mm top size of the crushed product and 13 mm to 0.5 mm size is treated in Heavy Medium Cyclone (HM cyclone). It has been observed that on crushing the difficult cleaning coal to minus 2 mm or so in place of 13 mm, additional yield of about 8 percent might be possible (Table 3). By crushing to minus 2 mm size, the percentage of coal in the fraction 2 mm-0.6 mm obtained is only 40-50 percent, the rest of the materials is below 0.6 mm. The screen analyses of two coals, one with difficult cleaning characteristics and the other with comparatively less difficult characteristics after crushing to minus 2 mm are shown in Table 4. It may be seen that about 40 percent of the materials is within the size range 0.6 mm- 0.15 mm (100 mesh), thus the percentage of materials within the size range 2 mm-0.15 mm is as high as 82-85%. The production of fines below 0.15 mm size generated due to crushing to minus 2 mm is low due to

contd....

tough nature of Indian coals containing considerable proportion of organic inertinite. The NGMJ of 2 mm-0.15 mm size fraction although is quite less as compared to that of 13 mm-0.5 mm size, it is still high as compared to that of foreign coals. The two size fractions, namely 2 mm-0.15 mm and minus 0.15 mm pose problems both in beneficiation and dewatering due to fineness and poor cleaning characteristics.

5. POTENTIAL APPLICATION OF HEAVY MEDIUM CYCLONE

Heavy medium cyclones have been well established for the beneficiation of small coal upto bottom size of 0.5 mm; the widely used feed size range is 13 mm-0.5 mm. The bottom size has so far been limited to 0.5 mm due to the problems of depulping and medium cleaning for particles below 0.5 mm. During the recent few years, studies on the possibilities of application of H.M. cyclone for fine coal cleaning are being pursued in some countries of the world including the USA and the Netherlands, aiming at the beneficiation upto the zero size of coal. The results of separation in H.M. cyclone expending the bottom limit to finer sizes are reported to be encouraging . At the Central Fuel Research Institute, India, extensive studies were made in early fifties & sixties (1-6) on the application of H.M.cyclone for the beneficiation of Indian coking coals using 0.5 mm as the bottom size of coal. With a view to study the performance of H.M. cyclone on finer feed with extension of bottom size limit, a project has been undertaken recently

contd.....

under the USAID/GOI programme. Work has been started. In this study, special stress is being given on the efficient beneficiation of finer fraction in the viscous medium. In order to achieve this, higher centrifugal force(higher pressure), low sp.gr of the medium for stipulated cut & finer grind of the magnetite will be particularly considered. A sample of dry ground magnetite as available in the ~~mari~~ market, which ~~are~~ is being used in many of the coal washeries in India, ~~have~~ has been characterised. The results are shown in Table 5. It may be seen that the magnetite is adequately fine but the magnetics content is rather on the low side. Therefore, it may require magnetic concentration.

6. RECOVERY OF CLEANS BY MIDDLINGS/SINKS RETREATMENT

The yield of clean coal even by the application of H.M.cyclone using finely crushed coal is not satisfactory and considerable proportion of by-product as middlings/sink are obtained. Studies have shown that about 50 percent of clean coal (out of the by product) can be recovered by fine grinding the byproduct and beneficiating applying the oil agglomeration technique. By this technique, the moisture retention in the cleans is minimised. A typical result of beneficiation of difficult to clean Indian coking coal envisaging H.M. cyclone ~~and~~ oil agglomeration technique is shown in flow sheet 1.

ACKNOWLEDGEMENT

The author expresses his heartfelt thanks to the team members of the project i.e. Sri S.Sekha, Sri S.K.Ghosh, Sri S.K Mitra (Sr) Sri S.K.Mitra(jr) Sri P.K.Majumdar, H.P.Das and ,Scientists for their valuable assistance in making the paper.

REFERENCES

1. The use of cyclone in coal washing-A.K.Chakravarti & A.Lahiri. Ind.Inst. Chem.Engrs, 1953-54, 6,54-59.

2. A study of the operation of 3" diameter cyclone washer installed at the CFRI-A.K.Chakravarti,G.G.Sarkar and A. Lahiri.Ind. Min Jour. Sept 1955.

3. A study of the operation of 6" dia. cyclone washer-A.K. Chakravarti,G.G.Sarkar and A.Lahiri. Jour Inst Fuel (London) Nov 1957.

4. The effect of near gravity materials on the performance of dense medium Coal washing units- G.G.Sarkar,S.K.Mitra, A.K.Chakravarti and A.Lahiri- JSIR, Vol 18B, No 7,59.

5. Studies in low pressure cyclone washer-A.K.Chakravarti,D.Basu, G.G.Sarkar and A.Lahiri, Jour Min Met & Fuels. July 1960.

6. Studies on the recovery of coking coal fraction from some difficult cleaning coals by treating in cyclone washer. S.K.Ghosh,D.Basu,A.K.Chakravarti and G.G.Sarkar. Jour. Min Met & Fuels, Special issue, 1964.

Table 1

Yield and NGM at separation densities corresponding to 17% & 18% ash in clean coal

Details of the sample	Overall ash%	17% ash Sp.Gr. of cut	NGM%	Yield%	18% ash S.G. of cut	NGM%	Yield%
1	2	3	4	5	6	7	8
A. PRIME COKING COAL							
1. Balihari colly. X seam, 75-0.5mm	35.7	1.460	48.0	14.5	1.467	50.0	16.7
2. Madhuband colly. X seam, 75-0.5mm	26.7	1.470	74.0	37.0	1.405	75.0	45.0
3. Bhalgora colly. X seam, 75-0.5mm	28.1	1.499	59.5	50.0	1.5[illegible]	56.0	57.0
4. Loyabad colly. XI Seam, 75-0.5mm	28.1	1,459	64.0	44.5	1.400	66.0	53.0
5. Benedih colly. XI/XII Seam 75-0.5mm	28.3	1.453	61.3	37.0	1.420	62.0	44.0
6. Khas Jeenagora colly. VII Top 75-0.5mm	32.5	1.472	56.8	11.3	1.470	58.2	13.0
7. Khas Jeenagora VII Bot 75-0.5mm	26.2	1.499	67.0	41.0	1.518	60.2	46.0
8. Bastacolla colly. Dhansar seam 75-0.5mm	29.3	1.486	64.6	22.8	1.499	68.2	29.0
B. MEDIUM COKING COAL							
1. Swang colly. Bermo seam, 13-0.5mm	27.7	1.466	52.9	50.5	1.510	49.5	57.0
2. DVC Mine Bermo seam 13-0.5mm	33.2	1,470	46.2	33.0	1.495	48.0	37.5
3. Dhori colly, Bermo seam 13-0.5mm	41.9	1.436	29.0	17.0	1.473	31.5	19.0
4. Kathara colly. Kargali seam Bot sec. 13-0.5mm	25.0	1.405	63,5	61.0	1.506	59.0	6810
5. Dhori colly. Karo Bot. 13-0.5mm	28.3	1.560	32.0	64.0	1.530	23.2	68.0

Table 2

Influence of crushing, on the sp.gr. of separation, N.G.M. percent and yield of clean coal for recovering same ash product

Colliery	Seam and section	Overall ash%	YIELD% OF CLEAN COAL WITH 17% ASH FOR THE WHOLE COAL CRUSHED TO BELOW				
			200 mm (size 200 mm-0)	75 mm (75mm-0)	13 mm (13 mm-0)	3 mm (3 mm-0)	0.42 mm (0.42 mm-0)
Bastacolla	V/VI/VII (Middle working section 16 ft)	23.4	Yield-40%	46.5	62.0	72.5	80.0
			Sp.Gr-1.492	1.502	1.543	1.587	1.652
			N.G.M.% -40.3	79.0	62.2	46.0	25.3
East Ena	VII/VII V/VI/VII (working section 33'8")	29.3	Yield% -	27.7	40.2	50.0	54.4
			Sp.Gr -	1.501	1.531	1.574	1.603
			N.G.M.% -	63.0	56.0	47.7	40.7

Table 3

Comparative statement of yield and N.G.M. for different ash levels obtained on crushing the coals separately to 15 and 2 mm

Seam	Raw ash%	Ash in clean coal	Raw coal yield%	Crushed to 15mm S.G. of cut	15mm NGM%	Raw coal yield%	Crushed to 2 mm S.G. of cut	2 mm NGM%
V/VI/ VII	32.3	18	43.0	1.530	54.5	52.0	1.573	40.5
		19	48.0	1.542	54.0	56.0	1.590	38.5
		20	53.0	1.555	53.0	61.0	1.610	36.5
XI	23.0	18	76.5	1.570	36.0	87.0	1.780	10.0
		19	82.0	1.610	27.5	90.0	1.85	7.5
		20	86.5	1.650	22.0	92.5	1.93	5.5

Table 4

Screen analysis of coal crushed to minus 2 mm

V/VI/VII Seam coal from Jeenagora colliery			XI seam coal from Muraidih colliery	
Size	wt%	Ash%	wt%	Ash%
2 mm to 0.6 mm	47.0	36.3	41.3	28.6
0.6 mm to 0.15 mm	33.0	28.5	40.7	18.7
0.15 mm to 0.076 mm	7.1	25.9	11.2	18.5
Below 0.076 mm	7.9	31.1	6.8	22.0
	100.0	32.3	100.0	23.0

Flow sheet 1

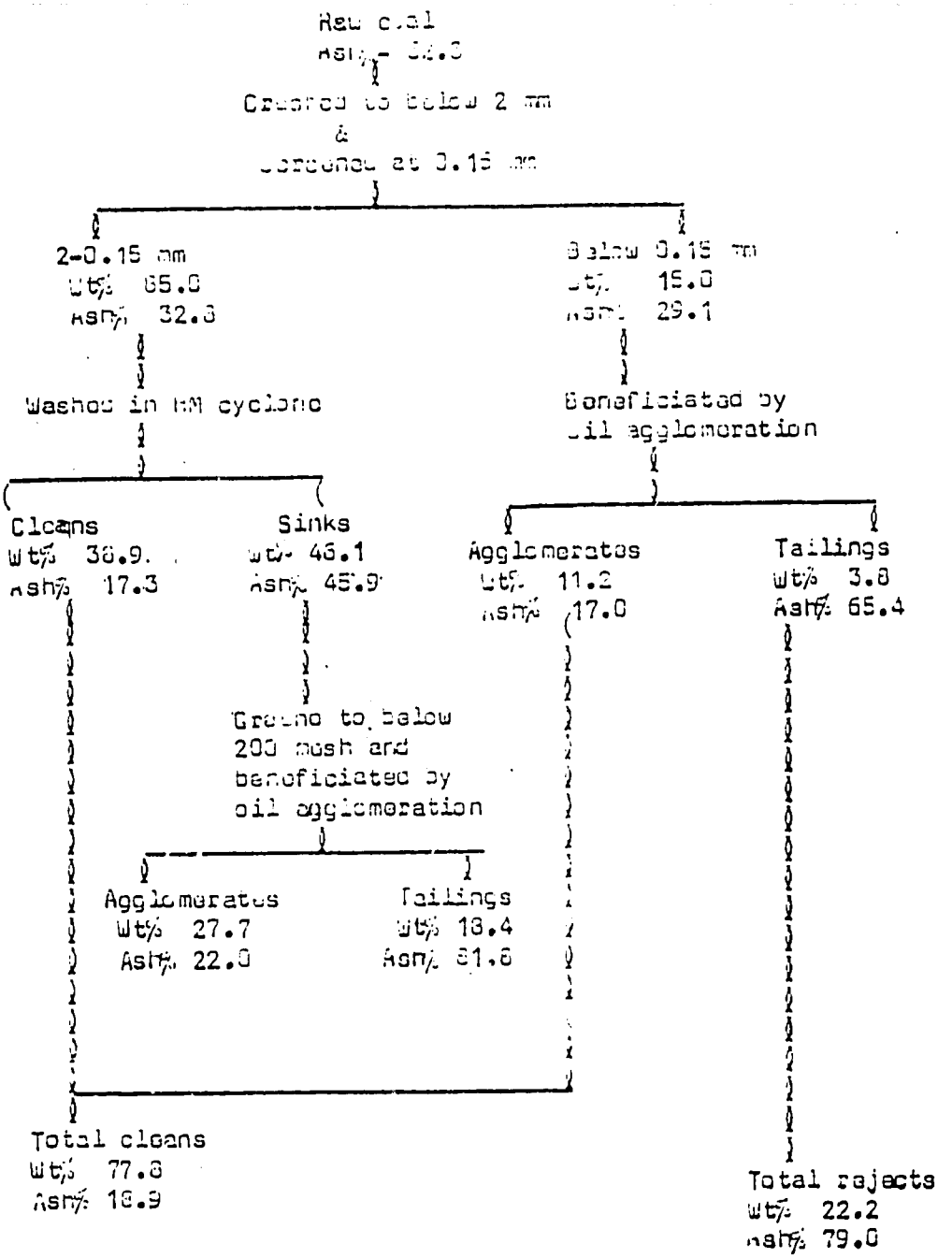
Raw coal
Ash% - 32.3
Crushed to below 2 mm
&
screened at 0.15 mm
2-0.15 mm
Wt% 85.0
Ash% 32.8
Below 0.15 mm
Wt% 15.0
Ash% 29.1
Washed in HM cyclone
Beneficiated by
oil agglomeration
Cleans
Wt% 38.9
Ash% 17.3
Sinks
Wt% 46.1
Ash% 45.9
Agglomerates
Wt% 11.2
Ash% 17.0
Tailings
Wt% 3.8
Ash% 65.4
Ground to below
200 mesh and
beneficiated by
oil agglomeration
Agglomerates
Wt% 27.7
Ash% 22.0
Tailings
Wt% 18.4
Ash% 81.8
Total cleans
Wt% 77.8
Ash% 18.9
Total rejects
Wt% 22.2
Ash% 79.0

Table 5

Properties of Magnetite to be used as medium for HM cycline.

Magnetic content

Magnetics- 61%

Non magnetics- 39%

Specific gravity of powdered magnetic: 4.1

Size analysis	Wt%
+0.076 mm	1.90
0.076-0.053 mm	4.83
0.053-0.044 mm	6.56
0.044-0.030 mm	23.53
0.030-0.020 mm	35.15
0.020-0.010 mm	12.39
Below 0.010 mm	15.39
	100.00

Stability of magnetite medium of S.G. of 1.46

SI - 93.8 (very good stability)

Viscosity of the magnetite medium of S.G.- 1.45

5 centi poise

Viscosity of coal- magnetite suspension- 6 centi poise (100-200 mm coal mixed with 1.40 sp.gr. medium in weigh ratio of 1:6)

HOT GAS CLEANUP
BHEL'S PROGRAMME ON GRANULAR BED FILTER (GBF)

S. R. Rao
R. S. Rangan
Bharat Heavy Electricals Limited
Hyderabad, India

HOT GAS CLEAN-UP - BHEL'S PROGRAMME ON GRANULAR BED FILTER (GBF)

By

J. R. Rao and R. S. Rangan
Energy Systems Group
BHEL, Hyderabad

BHEL started its Coal R&D programme in the year 1974, with the ultimate objective to develop and implement technology for better utilization of coal resources in India for power generation.

The R&D programmes of BHEL for the efficient use of coal can be broadly classified into the following two categories.

A) Development of equipments and systems which will result in the improvement of performance and economy of conventional power plants, in the utility as well as industrial sectors.

Following programmes come under this category:

i) Atmospheric Fluidized Bed Combustion boiler.

ii) Solid fuel burning test facility to study the combustion behaviour of coals.

iii) Erosion test facility to study the erosion due to coal ash for various materials.

iv) Low pressure coal gasification as a substitute for fuel oil for flame stabilization in pulverized coal fired boilers during start up and low load operations.

v) Coal beneficiation

B) Equipment and system development which will result in the eventual establishment of high efficiency advanced systems for the generation of power.

The following programmes come under this category:

1) Pressurised coal gasification:

   a) Pressurised Fixed bed gasification

   b) Pressurised Fluidized bed gasification

2) Pressurised fluidized bed combustion (PFBC)

3) Combined Cycle Demonstration Plant.

Most of the advanced power cycles using coal gasification or fluidized combustion processes would be economically viable, only when the particulate loadings in the hot gas can be reduced to levels acceptable to the gas-turbine operation, without having to lower the process gas temperatures in the clean-up systems.

Table-1 gives the details of the budget provided for coal programme projects of ESG/Hyderabad. The estimated budget for the hot gas cleaning test rig along with the PFCB rig on the dusty gas generator is around Rs.127 lakhs. US AID is expected to provide instruments and equipments worth around Rs.24 lakhs over and above the funding by BHEL, already indicated.

HOT GAS CLEANING SYSTEMS EVALUATION

The ultimate goal of hot gas cleaning systems development work will be to clean the gas to a level of gas turbine acceptability, in the field of coal based combined cycle power generation. This being the main goal the following are the major objectives of this project:

1. Identify potential hot gas cleaning systems and to work on the development of such systems.
2. Establish ETEP test facility suitably instrumented for the performance study of gas cleaning equipments.

..3

3. Train personnel and develop technical expertise in this area.

4. Update information on developments elsewhere.

The activities undertaken in this area to meet these objectives are as follows:

1. Review of available information (literature as well as commercial) in order to assess inlet particulate loading limits, for the application intended.

2. Review different clean-up systems to assess their potential to meet ETHP gas clean-up requirements.

3. Design of the first system and the test facility for performance evaluation.

Turbine Inlet Loading

Current estimates in literature based on model studies and on extrapolation of experimental data indicate that gas turbines will tolerate dust loadings of two to one hundred times greater than present specifications, which allow only 0.00046 gm/Nm^3 of dust in the expansion gas. Based on this the allowable limit can be estimated to be between 0.00092 gm/Nm^3 to 0.046 gm/Nm^3. These estimates are however associated with assumed distributions. However, they do provide a reference point for evaluation of clean-up performance of contending systems.

CLEAN-UP SYSTEM SELECTION

The following equipments have been identified as having the potential for cleaning gases in hot conditions, and many organizations are working on their development to suit ETHP applications.

a) Special cyclones - Tanjet cyclones, Multiclones, etc.

b) Surface filters - Fabric filters, ceramic filters

c) Granular bed filters

d) Electro-static precipitators.

BHEL intends to test a selected few of these systems in the HTHP test facility, presently under design, and initially granular bed filteration system has been chosen for the tests due to the expected high filteration efficiency and relative mechanical simplicity of the system and flexibility in operation. The test rig is being designed using a fluidized bed combustor operating at 5 atm and 900°C, as the required dusty gas generator.

Table-2 depicts time schedule for the project "granular bed filter performance analysis". The project is expected to be completed in the mid of 1987.

Test Facility

The test facility will be established at Hyderabad. A fluidized bed combustor, generating around 1200 Nm^3/hr of flue-gas will be used as the dusty gas generator required for the test. The combustor will be operated at 5 atm pressure and a temperature of around 900°C.

The flue gas passes through two stages of cyclones to reduce the dust loading in the gas, before it enters the granular bed filter. A compressor with a capacity of 1400 Nm^3/hr supplies the necessary air for the combustor. A part of the compressed air is used for the recirculation of granular media wherein it separates the dust from the media. The dirty air will then be cleaned in a conventional cleaning system where a choice will be made between a bag filter and a cyclone

depending on estimated operating temperature and availability. Logging and reduction system is proposed to be used to record and process all the required system parameters. These parameters are mainly flow rates, temperatures, pressures, pressure drops, velocities, dust concentration, etc. The proposed test facility configuration is shown in Fig.1 and preliminary equipment layout of the test rig is shown in Fig.2. Online particulate size and concentration measurement systems using optical techniques will be used, and conventional laboratory systems based on extractive sampling will be used for back-up and comparison purposes. Both at the inlet and outlet of the filter, isokinetic sampling systems will be used for drawal of samples for analysis to measure the dust loading and particle size distribution and this will be used to periodically check the functioning of the online device.

GRANULAR BED FILTER UNIT - DESCRIPTION AND DESIGN FEATURES

In the granular bed filter, particle collection is accomplished by causing the particle-laden gas to move radially inward in cross-flow through an annulus of granular collecting materials, which in the present case are Alumina balls of 2 mm dia. The granular solid media is in fact a moving bed and the media recirculation is achieved by a pneumatic transport system. It is expected that the dust particles collected and deposited on the granules will be separated during the transportation period. The pneumatic air is then routed through a secondary conventional cleaning system and sent to PFCB as feed air with the help of a booster. The media recirculation is planned to be controlled by a L.valve.

This unit is presently in the stage of detailed mechanical,

Design Features

Two different designs of filter elements both having ID of 100 mm and OD of 500 mm with filter thickness of 200 mm will be tested in sequence in the same pressure vessel. The height can be varied to obtain face velocities in the range of 0.23-0.76 m/s. The clean gas passes through the 100 mm dia central pipe and is radially distributed into the top portion of the filter from where it exits. The two elements differ in their design of gas exit and one of them is capable of two stage operation. The dirty gas and clean gas regions are separated by a horizontal plate. The outer space surrounding the filter can be filled with sand to effect a change in the face velocity of gas.

Recirculation system

The dirty media is recirculated by pneumatic transport and is expected to be freed from dust in that process. At the top of the pneumatic transport line, the pipeline is expanded so as to have a sprouting effect and the solids flow down a partition provided and from there it is drawn in to the filter via a dip leg. The media flow is controlled by an L-valve.

The lift line of the recirculation loop has been designed using choking velocity criterion. The L-valve is designed based on published literature and experimental data. The system has to be proved at elevated pressures, and also when temperature variations are expected.

Test parameters

Particulate collection in granular bed filters is primarily controlledby the following mechanisms:

1) Inertial impaction

2) Interception

3) Diffusion

4) Sedimentation

These mechanisms are dependent on size of dust, particle density in addition to the gas properties and operating parameters like temperature and pressure. To understand the capture mechanism in filter beds, it is vital to know the effect of these parameters, through which design basis and criteria for scale up could be developed for granular bed filters.

By considering the test rig limitations the following parameters are selected for study for this purpose.

1) Dust concentration

2) Dust size

3) Bed pressure drop

4) Media size

5) Velocity of gas

6) Pressure drop in the recirculation system.

Dust size

The dust size can be expected to be in the range of 1-40 microns with more of fine sizes since the PFCB flue gas passes through two stages of cyclones before the GBF and the concentration is expected to be around 1-2 gm/m^3.

Pressure Drop

The pressure drop varies with variation in dust load, gas velocity and media size. Effect of all these parameters on pressure drop should be carefully studied so as to arrive at an optimum set of operating parameters.

In moving bed filters at steady state, the pressure drop in the bed can be controlled by controlling recirculation flow rate. It is planned to vary the media recirculation rate in the range of 130 to 350 kg/hr.

Pressure drop in the recirculation system and bed will be measured and it will be attempted to set a design procedure for recirculation system using pressure drop variations and temperature variations.

Media size

For initial studies 2 mm dia Alumina balls are selected as filter media based on the earlier studies on granular bed filters. In addition 1 mm and 3 mm dia Alumina particles will also be used as media for study.

Velocity of gas

Based on literature study it is planned to vary the face velocity of gas in range of 0.23 to 0.76 m/sec. for the performance study of the GBF.

COAL PROGRAMME BUDGET
(ESG, HYDERABAD)

	IN LAKHS
— COMBINED CYCLE DEMONSTRATION PLANT & FIXED BED GASIFICATION	1475.00
— FLUIDIZED BED GASIFICATION	158.00
— FLUIDIZED BED COMBUSTION	88.00
— HOT GAS CLEANING SYSTEMS EXCLUDING PFBC RIG	60.00
— ANTICIPATED US AID FUNDING (TO BE FINALISED)	24.00

TABLE-1

TIME SCHEDULE

(G B F PERFORMANCE ANALYSIS)

DETAILED DESIGN		
GRANULAR BED FILTER		
AUXILIARY EQUIPMENT		
RECIRCULATION SYSTEM		
INSTRUMENTATION & SPECIAL EQUIPMENT	FEB	1985
SPECIFICATIONS & TENDERING		
PROCUREMENT U S A I D	JUNE	1985
B H E L	JAN	1986
FABRICATION	JAN	1986
ERECTION & COMMISSIONING	JUNE	1986
EXPERIMENTATION, DATA ANALYSIS & REPORT WRITING	OCT	1986
	JUNE	1987

NOTE :- U S A I D AGREEMENT AS PER THE PRESENT STATUS IS VALID UPTO JUNE 1986

TABLE – 2

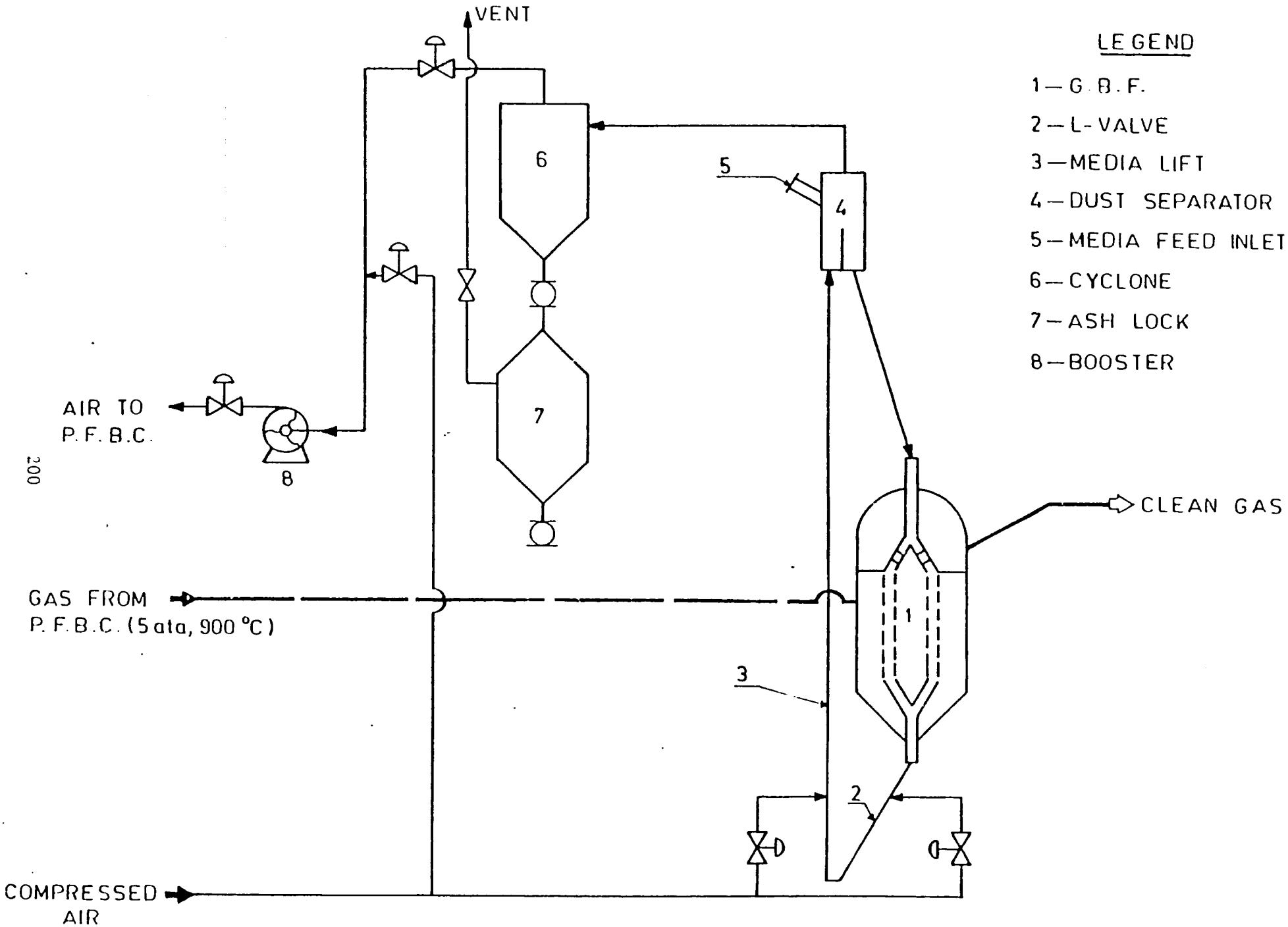

FIG. 1 – GRANULAR BED FILTER (G.B.F.) TEST FLOW SCHEME

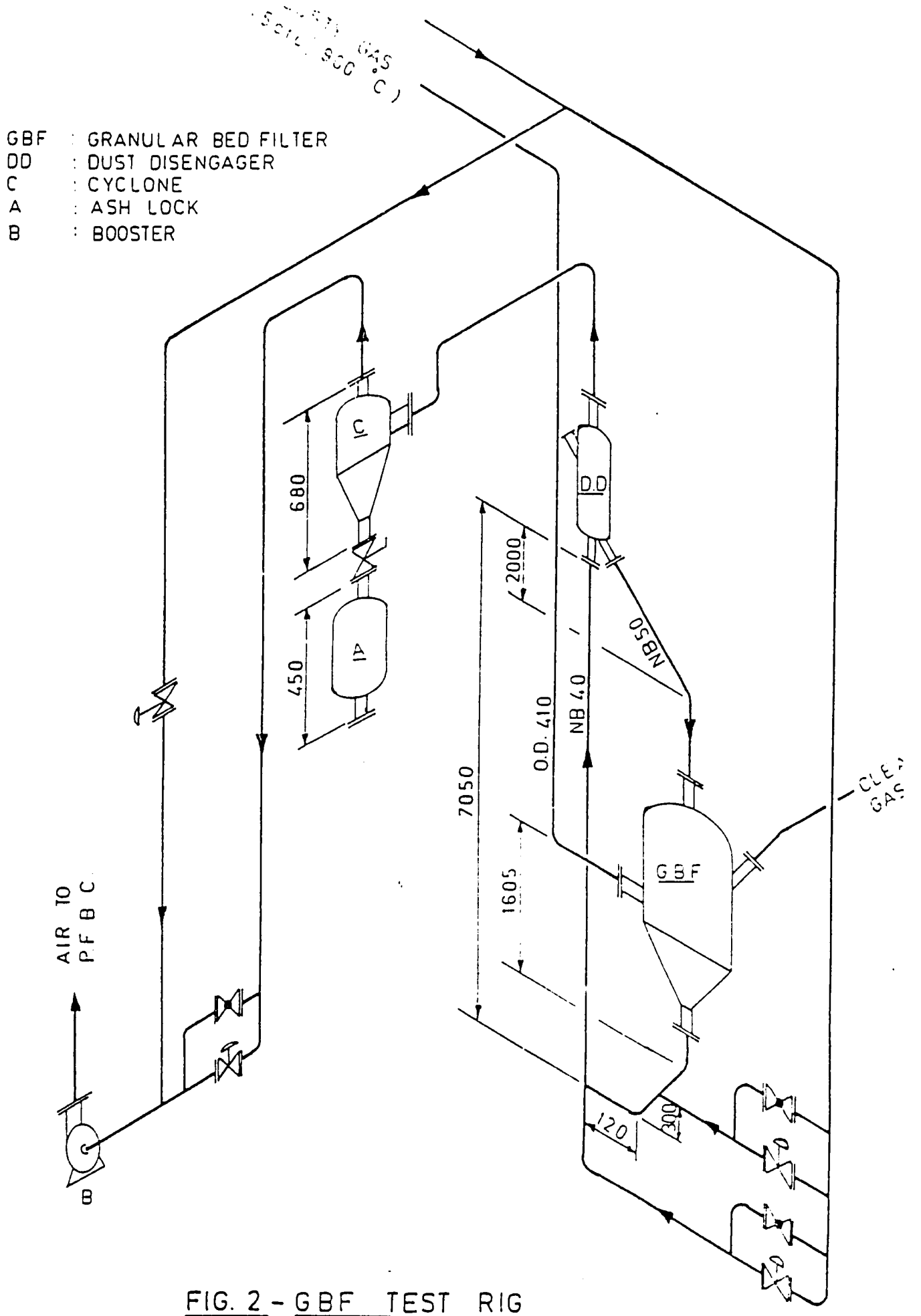

FIG. 2 - GBF TEST RIG
(PRELIMINARY LAYOUT)

GAS CLEAN UP -- A REVIEW

R. Vaidyeswaran
Regional Research Laboratory
Hyderabad, India

GAS CLEAN UP - A REVIEW

Dr.R.Vaidyeswaran
Regional Research Lab. Hyderabad

Gasification of coal is an important method of coal conversion. It is meant for the production of fuel gas to be used in industries, town gas after reducing the carbon monoxide content; synthesis gas ($CO+H_2$) for subsequent conversion to fertilizers, synthetic liquid fuels, methanol and chemicals, and synthetic natural gas, and for gaseous reduction of iron ores. Gasification is usually done with air-steam or oxygen-steam, at atmospheric or elevated pressures. The processes for gasification can be classified as fixed or moving bed, fluidised bed and entrained bed. Each of these has advantages and disadvantages. Depending upon the type and size of coal, the end use of gas, the process is chosen. The processes so far commercially proven are the following:

- Moving bed pressure gasification process, eg. Lurgi.
- Fluidised bed process at ordinary pressure, eg. Winkler.
- Entrained bed process at atmospheric pressure, eg., Koppers-Totzek.

Some of the processes under development are the entrained bed gasification under pressure (Texaco, Shell - Koppers), fluidised bed under pressure (High temperature Winkler) fluidised bed under pressure and ash agglomerating conditions (Westinghouse and U-gas), moving bed slagger (British Gas - Lurgi slagger). The conventional producer gas generator operating at ordinary pressure has been in use for quite some time mainly to generate a low Btu gas

for local use. Gasification under pressure is advantageous for subsequent processing.

For every subsequent use the gas produced by oxygen-steam or air-steam gasification has to be cleaned to remove the dust particulates, tar particulates, sulphur compounds, carbondioxide, alkali and chlorine compound. The dust particulates have to be removed particularly when the gas is to be used in gas turbines to avoid erosion of blades. For shift conversion or methanation, the dust particles have to be removed to avoid fouling of catalysts. The sulphur compounds are poisonous to catalysts for methanation and FT synthesis. The usual sulphur compounds are hydrogen sulphide, carbon oxysulphide, thiocyanate, mercaptans, etc. Carbondioxide being inert, it is preferable to remove it and enhance the calorific value. For ammonia synthesis and FT synthesis also it has to be removed. Alkalis and chlorides are particularly harmful if the gas is to be used in gas turbines. From these view points, gas clean up is an important processing step for coal gasification. In any gasification process, gas cleaning contributes substantially to the total capital costs, between 15 and 35%.

The present practice is to use wet methods involving aqueous media like hot potash for the removal of particulate matter, sulphur compounds and CO_2. During this process

the gas which leaves the gasifier at about 500°C in moving bed processes and at higher temperatures of about 1000°C, or even more in entrained bed processes has to be cooled with heat recovery to a temperature of less than 200°C. By this process the sensible heat of the gas is lost and for subsequent processing (eg., shift conversion) it has to be reheated to a higher temperature. For use in gas turbines, a higher gas temperature is advantageous. The process is thus thermally less efficient than when the gas is not cooled. The process efficiency will be better by 2-4 points when the gas is not subjected to wet handling and cooling. It is reported that wet scrubbing results in loss of 20-33 Btu/cuft on fuel value and tar removal in 1-25 Btu/cuft. Hot gas clean up helps to save heat content to the extent of 50-60 Btu/cuft. The capital costs are also high for heat exchangers, wet scrubbers and other equipment. Solvent scrubbing with methanol, dimethyl ether, polyethylene glycol, etc., is also in vogue in the industry. These methods have been found to be very effective for large scale practice. All the industrial gasifiers use one of these wet scrubbing methods. At the same time alternative and more efficient methods of gas clean up are being developed by many agencies in USA, UK and Germany. These methods may be classified as

- Adsorptive methods using beds of adsorbents;
- Permeative methods using membranes;
- Absorptive methods using metals/metaloxides/molten salts.

Some of these are briefly mentioned here.

Removal of particulate matter and tar:

Depending upon the type of gasification process, the dust content in the gas varies and it is more in entrained and fluid bed systems than in moving bed processes. In fluid bed processes, the particulates may have to be recycled to improve the carbon conversion. In the case of fixed bed processes, the accompanying tar and oil will aggravate the problem of removal of solid particles. Quenching the gas with gas liquor is the normal practice for removal of tar and oil. Quenching with steam may be a better method. Physical absorption in solvent is feasible when the quantity of tar and oil is in minor amount. Cracking the gasification product over a bed of lime and other materials which have catalytic activity has been suggested as a method of removal of tar and oil. This may simultaneously increase the content of gaseous hydrocarbons and the calorific value of the gas.

Particles >2 micron in size can be removed by high velocity water jets, wetted mesh filters, charged droplet scrubbers, electrically charged filters (a combination of electrostatic filter and mechanical filter), sonic agglomeration, cross flow filters, etc. Table 1 gives some of the particulate removal systems capable of operating at 800°C and 20 atm.

Cyclone collectors are the most common used equipment for the removal of coarse particulates. Cyclones are however not effective for removing fine particulates. The efficiency of separation in cyclones decreases with increasing temperature but this can be offset to some extent by using a battery of small cyclones in place of one large-sized one. With increasing pressure, performance of cyclone improves. Plugging in cyclone is a drawback. Granular bed filters are being developed in which dust laden gas passes through a shallow granular bed, depositing particulate matter on the surface of granular media. The bed media is cleaned by a reverse flush that fluidises the bed and elutriates the collected particulate matter from the system. Such granular bed filters are being developed mainly for use in pressurised fluid bed combustors (PFBC). These may also be suitable for fluid bed and entrained bed gasifiers. These are reported to have a collection efficiency of more than 99% without pluggage, media attrition and metal corrosion. Higher pressure is reported to improve the efficiency. Electro static granular bed filters for pressurised fluid bed combustors at 750°C are also being tried. These are reported to be economical in cost comp red to cyclone cum low temperature baghouse. A dry plate scrubber similar to sieve column containing alumina spheres has been found to remove dust particulates at

600-900°C and 15 bar and bring down the dust content to a level permissible in gas turbines. Use of electrostatic forces in one of the plates helps to improve collection efficiency.

Ceramic cross flow filters are being tried for PFBC at an elevated temperature of 800°C and a pressure of 10 bar. They do not get plugged and can be cleaned by a pulse jet of reverse flow. Ceramic fibres have also been used for filtering fine (5-20 micron particles. These are two types - filter with a fitted media consisting of a nonwoven ceramic mat between retaining screens and a filter woven from ceramic yarn. Collection efficiency of 99.89 - 99.99% has been reported at high temperatures of 500°C. National Coal Board of UK also studied the use of ceramic fibres for hot gas clean up. When spun and woven into a fabric, these filters were efficient but they lost mechanical strength rapidly when heated and failed during pulse cleaning. Ceramic fibres bonded into a solid matrix in the form of candle have shown high collection efficiency, good mechanical strength and moderate residual pressure drops.

High temperature particle separator is under development for temperatures upto 500°C and for removal of particles upto 2 microns. Venturi scrubbers have also been suggested for particulate removal. In some of these methods, pressure drop, carry over of mist and loss of temperature are disadvantages. Electrostatic precipitators currently

available are usually restricted to low pressures. However such precipitators for higher temperature (upto 900°C) and pressure are under development. The panel bed developed by Squires was also investigated by NCB in UK but was subsequently given up. National Coal Board of UK made a study of sand filters for removal of particulates but the results were reported to be not encouraging.

Removal of Sulphur Compounds:

The method of wet gas cleaning for removal of sulphur compounds is not dealt here as it is well known. The disadvantages of such wet methods are loss of sensible heat, solvent loss, large space requirement and high capital costs. Attempts are being made to develop dry methods. These can be grouped as conventional, involving absorption, adsorption and chemical conversion and non-conventional involving membrane permeation and use of supported metal complexes. These dry processes however required a tar and oil-free gas. Hence the gas from moving bed gasification process has to be cooled to below tar fog temperature. Any unconverted steam used for gasification may also pose some problems during dust removal. The use of iron oxide beds for removal of H_2S is well known. It operates at room temperature and requires large space. It is suitable for removal of H_2S and mercaptans but not for COS.

Other adsorbents like active carbons, molecular sieves, silica are being tried. Most of the adsorption processes operate at room temperature since adsorption at higher temperatures is poor. Active carbon beds remove sulphur compounds by inducing oxidation of H_2S to sulphur. Molecular sieves have been tried for sulphur removal. The life of such sieves is reported to be 2-5 years. Removal of CO_2 by molecular sieves is well known.

Mixed oxides have been studied for bringing down the sulphur content in coal gas from 200 ppm to 1 ppm. Copper oxide, copper oxide/zinc oxide beds (packed and fluidised) have been found to effect this degree of desulfurisation at 600-650°C. The sorbent can be regenerated with air-steam. Oxides dispersed on zeolite or coprecipitated oxides have been found to be equally good for sulphur removal. These oxides can remova mercaptans, carbon oxysulphide and carbon disulphide. However, a pre-requisite for using such oxides is sulphur reduction from initial level of 6000 ppm to 200 ppm, usually in iron oxide beds. A reactor with multiple beds of sorbents having different affinities for H_2S is stated to be having an advantage over single bed of metal oxide in that, during regeneration, the products contain elemental sulfur which is more favourable than when SO_2 is formed as in the case of single bed of sorbents. Such metal oxides having low affinity for S compounds are manganous oxide, cobalt aluminate, iron chromite, iron ortho silicate, cobalt

titanate, etc. The sulphur removal can be at high temperatures upto 650°C. The residual sulphur has to be removed by another oxide bed having high affinity towards H_2S (eg., zinc oxide). The regeneration is carried out in the reverse direction and the SO_2 from top high affinity bed (zinc oxide converted to zincsulphide) reacts with low affinity oxide bed (converted to sulphide) and forms sulphur.

Membrane process is a newly emerging area for separation of gaseous components. The process depends upon the principle of different components permeating across a membrane at different rates. Many materials like rubber, polymer are being tried as membranes. This process is yet to be tried on large scale. It has many advantages - lower utility requirements, reduced capital, etc. Membranes have been tried for separation of other gaseous components like ethylene and propylene from paraffins, dehydration of natural gas, recovery of methane from biogas, adjustment of CO/H_2 ratio in synthesis gas, recovery of helium from natural gas. Separation of air into oxygen and nitrogen is also being tried. This method appears to have a good potential for removal of CO_2 and other sulphur compounds.

Supported metal complexes on polystyrene and similar supports have been used for preferential removal of CO, CO_2, H_2. Pd, Ir and Ru complexes of the type

$Pd_2(Ph_2PCH_2PPh_2)_2Cl_2$ have been found useful for CO removal.

Removal of Alkali Vapors:

Sodium and potassium vapors released in gasification process range from less than 0.1 ppm to about 1000 ppm. Emathlite pellets (fullers earth) were found to be good getters for alkali at temperature of 850°C and 10 bar. Alumina spheres have also been found to remove alkali vapors to the extent of +99.8% and more.

Proposed programme at RRL-H:

RRL-H has a major R&D programme on coal gasification. A 1 t/hr moving bed gasification pilot plant has been installed and commissioned. Studies are in progress on the gasification characteristics of high ash coals and on process parameters for getting different types of gas like fuel gas, synthesis gas, etc. The pilot plant has facilities for air-steam and oxygen-steam gasification and for removal of CO_2 & H_2S by hot potash wash. Atmospheric fluid bed gasification is also being studied on bench scale by the Laboratory.

As part of this R&D project, gas clean up and separation by recent methods is proposed to be investigated. It is proposed to study new techniques for separation of acidic gases like carbon dioxide and hydrogen sulphide and sulphur compounds. In the first phase, separation and regeneration behaviour of metal/metal oxides, active carbons, molecular sieves and other adsorbents will be studied, on bench scale. A simulated gas mixture will be used.

Different membrane materials will be tried with simulated gas mixtures. Parameters like pressure and temperature will also be studied. In the second phase, gas from the moving bed gasifier will be used after tar and oil removal.

Suitable techniques for the detection and estimation of sulphur compounds and CO_2 at ppm level will be first established.

To summarise, the subject of gas clean up for removal of particulate matter, sulphur compounds, CO_2, etc., which are harmful to gas turbines and to catalysts for subsequent processing is of great interest in coal conversion process and is being extensively studied. These involve adsorption, chemical reaction with metal oxides, complexes, etc., membrane separation and other novel techniques. It is proposed to try some of these on bench scale using a simulated gas mixture and later the gas from the moving bed gasifier at RRL-H.

Table 1

Particulate Removal Systems capable of operating at about 800°C and 20 atm.

Filter media	Size relative to cyclone.	Efficiency at 2 micron size.	Face velocity ft/min.	Developer
Cyclone	1	80	-	Aerodyne Development Corporation.
Metal Fabric	0.3 to 2.0	99.9	100-200	Brunswick Corpn.
Ceramic Fibers	3 to 6	-	-	3M Co.
Silica Fibers	3 to 6	-	-	J.P.Stevens.
Electrostatically charged filter media.	0.6 to 2.0	99.9	20-40	American Precision.
Panel bed sand filter.	0.6 to 3.0	99.9	30-45	City college of New York.
Panel bed sand filter.	0.3 to 2.0	99.0	30-90	Ducon Co.
Moving Pebble bed.	3.0	80	30-100	Combustion Power Co.
Sintered metal	5 to 10	98	7-10	Pall Trinity Micro Corpn.
Impingement scrubber.	2 to 3	99.9	-	Babcock & Wilcox.

Literature cited

1. Third Annual Contaminant Control in hot coalderived gas streams, Contractors' Meeting Proceedings, sponsored by U.S. Dept. Energy K.E. Markel, Editor, Dec. 1983.

2. Low Energy Process for separating hydrogen and methane in advanced coal gasification processes, R.T.Yang, J.T.Saunders, S.G.Byers and S.S.Wang. Report prepared for U.S. Dept. Energy Contract No.DE-AC21-80MC 14386.

3. The Economics of hot gas cleaning for coal gasification combined cycle power generation, G.P.Reed, paper presented to Filtech Conference, London, 1983, organised by Filtration Society and Co-sponsored by the Institution of Chemical Engineers.

4. Simultaneous high temperature removal of alkali and particulates in a pressurised gasification system, P.R. Mulik, M.A. Alvin and D.M.Bachovehim, prepared for U.S.Dept. of Energy under Contract DE-AC 21-81 MC 16372.

5. Annual Report 1983-84 of Coal Research Establishment of National Coal Board, U.K.

QUESTIONS & ANSWERS

COAL PREPARATION & GAS CLEANUP - SECOND DAY

C: B. K. Mazumdar: Thank you, Dr. Vaidyeswaran. We are now open for a few questions.

Q: S. K. Ghosh: We are basically involved with the transportation of coal over long distances, and this coal must be ground to a particular size; water is then put into it to make a slurry and it is pumped. Can we take advantage of this mode of transportation, in connection with coal beneficiation, mainly for thermal power stations? To my knowledge, not much work has been done on thermal power coal requirements for beneficiation as is done with coking coal. Transportation of coal as slurries to pipeline opens up a convenient avenue for beneficiation of thermal coal.

A: M. Chakraborty: The project we have undertaken under the USAID/GOI program considers coking coal beneficiation; however, I will reply to Dr. Ghosh's question about non-coking coal beneficiation and pipeline transportation. With coking coal, the

ultimate use of clean coal is in coke making. So if it is ground to a very fine size, 14 mesh 1.2mm, as you are considering for transportation, that may normally lead to problems in coke making unless some improvement is made in the coking technology. Regarding non-coking coal transportation, the product has to be dewatered; otherwise it will have a lot of free moisture in addition to inherent moisture and that will lead to tremendous inefficiency if the moisture is not removed mechanically and thermally. For non-coking coal beneficiation, why should we grind it to a smaller size to beneficiate it? Our power stations are designed for accepting coal having 35% ash +/- 2%. The main purpose of beneficiation is not to remove the ash but to remove the detrimental particles of hard lumps and also free silica, etc. in the final form, so that these will not create operational and maintenance problems or reduce production availability. In order to avoid frequent stoppages at the plant, we have to remove the detrimental particles; ash is not very important. The efficiency will also depend on the nature and characteristics of the coal. It may not be the same for all power stations so pipeline transportation can definitely be used for non-coking coal but we will have to assure that the coal is duly dewatered prior to using for combustion purposes.

C: B. K. Mazumdar: I do not know whether or not Mr. Ghosh is satisfied but we will have the panel discussion later and he can ask the question again.

Q: S. Chandrasekaran: On the hot gas cleanup, Mr. Rangan was telling us that the object is to get the gas cleaned to a level of 30 mgs per normal meter cube for gas turbines, etc. As far as the inlet concentrations are concerned, has he considered different coals to be fired in the PFBC, which is going to generate this hot dirty gas. What are the coals considered, and what are the inlet dust concentrations?

A: R. S. Rangan: The inlet dust concentration to the granular bed filter does not directly depend on the coal fired in the PFBC because this is the final stage of gas cleaning. Before that we will have at least one or two stages of cyclones and, depending on the concentration that is expected at the outlet of the PFBC, it is always possible to add or delete one cyclone to get the desired concentration at the granular bed filter inlet.

Q: R. Krishnan: I have a question on hot gas cleanup. I was looking at the chart and you had a pressure of 5

atm going into the granular bed filter. My question is, what is the operating pressure in the PFBC? Is it 5 atm or higher? As a followup, I would like to ask if there are steam tubes, air tubes, or what type of cycle you have for the pressurized fluid bed combustion.

A: R. S. Rangan: No -- this is an adiabatic combustor, and this would be operated at 5 atm pressure. It is mainly for testing the combustion aspects of pressurized coal burning.

MORNING PANEL SESSION - SECOND DAY

C. B. K. Mazumdar: I will now request the authors of the morning presentations to be here and also our host coordinators for the program, Mr. Killmeyer and Dr. Ghate. Please submit your written questions or comments, or come to the microphone and address your questions clearly.

Q. M. M. Sen: I have a question for Mr. Rangan. Has BHEL any program for cleaning up sulfur compounds for gas to be fed to the turbines? My second point is, I have been told that alkali compounds are harmful for turbine operations. So how are we going to get rid of the alkali compounds in hot gas cleanup systems?

A. R. S. Rangan: We don't have a program for H_2S removal or alkali removal at the moment, but this problem is being looked into separately by our material science people.

A: R. Vaidyeswaran: In a fluid bed gasifier or any

type of gasifier, H_2S COS and mercaptans are always present. Depending on the concentration, perhaps the first stage removal will be using iron oxide. In the second stage, mixed oxides, activated carbon and molecular sieves are being tried. The removal of alkali and chlorine, particularly for use in gas turbines, is very necessary. The norms are very stringent. I came across a reference where pellets are being used, something like fuller's earth, which retain the alkali by some sort of a complex, and then it can be regenerated. Beyond that I am not aware of any other details.

C: N. N. Ramakrishnan: With regard to the questions posed by Dr. Sen as to whether or not BHEL is working on H2S removal and alkali removal -- we have imported one gas turbine from Mitsui for combined cycle power generation. The requirements of the gas turbine are such that the sulfur content of the gas can be as high as 2% and the alkali compound requirements are also quite high. Based on our coals, we find there is no requirement for cleanup of these two compounds at this stage.

Q: G. S. Sidhu: Is it possible, and not too soon to imagine, that in ten years the new materials of

construction will lead to gas turbines which will not be concerned with separation of particulate matter or impurities in the gases?

A: B. K. Mazumdar: This is a very interesting question and a challenging one. All our scientists will be interested in tackling it. Any responses?

A: R. Krishnan: Right now there is a void in the availability of advanced and sophisticated materials to clean the dirty gas from combustion gasification systems, I think, and I am not speaking for the USDOE or the companies in the US. There is a high temperature materials technology lab being built at Oak Ridge National Lab to look into this problem of finding new materials. GE has done a lot of work and I think they have come to the conclusion that it will be more like 15 to 20 years before we can hit upon some sophisticated material to combat the sulfur, the alkali potassium and detrimental agents in the hot gas. Parallelly, the target date set for commercialization of PFBC is something like 1990-1995 and compromises are being made from the advanced concept of high pressure FBCs to low pressure -- for instance, the turbo-charge concept, wherein you have lower operating pressures so that your tolerances on the turbine can be a little

more relaxed.

This is a very important question and I think the answer is "yes," there is a lot of work that has been initiated at the basic research level, but I think the time factor is more like 15 to 20 years. The other approach that has been simultaneously taken is to look at new process variations where you look at lower pressures so that we could still, with the available state-of-the -art technology, use conventional off-the-shelf items. The third thing is, of course, basic research which the current administration is emphasizing. National laboratories have to perform fundamental basic research and provide the technology for the industry, and they should take up the issue of commercialization.

These are the three approaches being followed in the United States. GE and Westinghouse have been working on this, but they are far behind in time. I am not very sure how countries in Europe are reacting to this.

Q: I would like to ask a question on hot gas cleanup. With all this work on hot gas cleanup in the U.S. and the rest of the world over the last 15 to 20 years, at least to my knowledge we still do not have a gas

cleaning system. From Dr. Ghate and his colleagues, I would like to know whether we are moving in the right direction to have a combination of cyclones and granular bed filters, and what other developments are taking place in the United States in this connection?

A: M. Ghate: There are two approaches. One is, what is the source of the dirty gas? If we are looking at the PFBC combined cycle and the gasification combined cycle, cleanup systems are entirely different. As far as the PFBC combined cycle is concerned, we are looking at several units -- a granular bed filter is one of them and metal oxides for the removal of sulfur is another. As far as the gasification combined cycle is concerned, in the US we have a two-fold problem -- not only the particulates but also the sulfur NO_x and SO_x. In that respect we are looking at cyclones for the primary particulates cleaning, followed by zinc ferrites or some of the metal oxide systems. Currently at KRW, formerly known as Westinghouse, we have a program testing the zinc ferrite system which was developed at Morgantown. GE has just completed a test in which a fixed bed gasifier was used and in situ removal using dolomite. We have captured almost all the sulfur and alkalis also. It is

predicted right now from the data that all the alkalis were sorbed and the turbines were almost clean after almost 500 hours of test. To really tell you which way we are going -- in gasification we are going into the zinc ferrite or iron oxide systems and, in the PFBC, we are going to the granular bed filters and some of the newer devices.

Q: I have a question for Dr. Ramakrishnan. The combined cycle plant is going up at BHEL Trichy, and we were told yesterday by the Director Technical that the commissioning date is now November 1985. Is it possible, or is it somewhere in the test program, that a hot gas cleanup system can be actually tested in this facility because that, to me, looks like doing some testing on a larger unit that can speed up the rate of technology in India and in turn provide information in the United States. This is because we do not have a 6 MW combined cycle plant. We do have the big coal-water project.

A: N. N. Ramakrishnan: Presently we are going ahead with fixed bed gasification technology for combined cycle power generation. Here we have a wet scrubbing system, so in this particular plant which is to be commissioned in October or November of this year we do not have the

facility for hot gas cleanup systems; however, as our Director Technical told you yesterday, the second phase of the study on the combined cycle plant will be linked up with fluidized bed gasification of the same capacity. When we move over to fluidized bed gasification, our intention is to hook up a hot gas cleanup system and do these combined cycle plant studies. This program is envisaged three and a half years from now, so at that time we will be able to generate data on a hot gas cleanup system and its effect on gas turbine operations. Before that, we will be doing our hot gas cleanup studies on the fluidized bed combustor. At our facility in Hyderabad we have a fluidized bed combustion unit and, if feasible, we would link up the present hot gas cleanup facility to that fluid bed gasification facility so that the changeover to the 6 MW power plant would be simpler and easier.

C: M. Ghate: I would like to say that, prior to the selection of any cleanup system, it is critical that we look at the entire system including the type of coal used and the end use. Once you have defined the system, then you can select the kind of cleanup system you really need. If you find out from your analysis that you really do not need that much cleanup, then you

will have a very simple system. I think it is immature to select a cleanup system and then fit a coal conversion and turbine system around it. I would feel more comfortable by selecting what you have based on your raw material and then develop the cleanup system.

C: Mr. Mazumdar. I am glad to hear what Dr. Ghate has to say. In fact, I was going to remark on the challenging question put by Dr. Sidhu which was so ably tackled by Dr. Radha Krishnan. Either you develop materials of construction to contend with the situation or you make the coal behave -- that is possibly what Dr. Ghate had in mind. In this connection, let me refer to one of our recent works on weathered coal. A lot of development has taken place in America on SRC, which is one of the cleanest possible fuels. While you refine the coal by high pressure hydrogenation, wherein the hydrogen requirements are as little as 1 to 1.5% by weight of coal, you remove most of the oxygen. Coal is thus upgraded in terms of its heat value, its carbon content and the process sulfur also -- 80 to 90% is removed. So if you use a cleaner fuel for your gasification of fluidized bed combustion and the like, the gas cleanup systems become simpler and also this fuel becomes more environmentally acceptable. Moreover, the cost would be more than made up by what

you get out of it, because Dr. Vaidyeswaran said that 30-35% of the cost is due to the gas cleanup systems. Therefore, either you have the right materials of construction or make the coal behave to meet your requirements. Another approach is to use weathered coal, a part of the seam which has cropped out. The entire carbon structure of this coal has remained intact and there has only been oxidative dehydrogenation, bringing about a profound change and reorganization between the aromatic and hydroaromatic carbon molecules, as a result of which the coal has been converted to a non-caking coal and a smokeless one. Not a trace of tar or smoke emanates from this weathered coal. If this weathered coal is used in gasification or combustion, the gas cleanup systems with regard to tar and tar mist would be much simpler. Both SRC and weathered coal can obviate many of the problems associated with gasification and combustion gas cleanup systems.

Q: R. Krishnan: I have a very short question. I saw the scheme put up this morning by Dr. Chakravarti and it looked like when you reached 20% ash everything came to a standstill as far as the cyclone is concerned. The question is, have you done washability studies to see if pushing it beyond that will be uneconomical and,

with the situation in India and with the technology you have and are developing, is there an upper limit such as 20% ash beyond which any of the techniques will not be effective? Also, how are the mining techniques in India contributing to the worsening problem of high ash and, with advanced longwall mining techniques, do you expect to get better quality coals?

A. A. K. Chakravarti: From numerous washability data and carbonization and petrographic data we have established that, as far as coking coals are concerned, 19% ash is optimum because if this is exceeded to 20% the materials that will be added will have an ash content higher than raw coals. So, instead of going to 20% we can mix the raw coal and hence the purpose is defeated. After 19% ash, the vitrinite content sharply drops, and hence the coking propensity of these coals drops. This is the optimum percent of the coking coal ash that can be obtained.

A: S. K. Bose: I would like to add a few words to Dr. Chakravarti's comments and the question raised regarding the ash content of clean coals for coking. I understand -- it is not a personal experience -- from Energy Board discussions in which I have also participated in India that, even from the user's angle

-- i.e., the blast furnace efficiency -- it seems that this ash content in clean coal up to 20% has a relevance. This means it does not deteriorate the efficiency further from the level of 17.5% of ash content in clean coal we expected earlier, in the 1960s. In actual practice we have been going outside this limit so we have experiences, not only from the concept angle but from what is actually happening. So it is found that, even stretching to 20%, it does not deteriorate the blast furnace efficiency to that extent; of course, there is a stage of carbonization. But the point is, that from the angle of coal washability characteristics, the high ash contents of the raw coals we are now treating which, as we mention, have figures up to even 35%, a totally different situation from 22 to 24% ash in raw coals when we had built the preparation plants in the 1950s and 1960s. Today it has even gone up to 25 to 35% ash in raw coals. The Energy Board recommendations have also brought out this point very strongly and from the operating angle we should accept this 20% ash in coal.

Q: S. K. Bose: Coming to another area, if I could ask a question of Mr. Chakravarti. You have shown 2mm top size for washing coal in heavy medium cyclones, smaller diameters yet to be tried, and then .15mm

for oil agglomeration. If this is the concept, then the first question is: seeing the nature of coal mining trends in the coking coal bed, we are now going to enter into a new era of large-scale open cast mining in the coal belt of Jharia. We should prepare our flowsheet for such a type of project. Thick seams contain shale bands in such a way that, after these deposits have taken place over a long period of time and drift origin, they are bound to have shale which is a small but significant element in the coal seam production. So both these shales as occurring in nature and also extraneous materials which are likely to come up in the open cast mine in the future. Further, the old mines are already honeycombed by the old pillar mines and, while you do the open cast mining, you will have a tremendous amount of rock associated while digging the coal. It is not a normal open cast mining as we claim for a fresh coal seam. But it will be open cast mining over first-worked underground deposits and therefore we should have a lot of admixture of associated rocks. With this situation, after the first crushing, if we could just wash off at 1.8 specific gravity then we would get the "real" raw coal for handling the subsequent stage. If in the subsequent stage -- that is, the main coal washing step -- would you consider that the coal be treated in the

normal coal preparation process? Whatever sinks or middlings are generated in the process, we will reduce it down to 2mm or 3mm, and then bring in more release of the extraneous matter from the coal and upgrade it by the processes that Mr. Chakravarti explained. If this could be the area of thinking, then the application of the new dimensions of smaller-scale top size 2mm has to be adopted into the whole system of handling, preliminary preparation and final preparation. My question is, why 2mm? In coking coal practice we have 3mm. I know in Germany the preparation plant designers especially ask this question. Where did it originate?

I understand in this size of crushing range they used to have 30mm coals and the new crusher developments crush with a ratio of 15:1. Hence as a corollary it came down that a 30mm coal would have a size of 2mm by one-stage crushing.

I would like to hear from Mr. Chakravarti how to react to the total process scheme and the question of 2mm top size.

Another question I would like to pose is, the heavy medium cyclone he has conceived -- can it be dealt

through jigs? In any case you are treating the subsequent fines and products through oil agglomeration.

A: A. K. Chakravarti: I fully agree with Mr. Bose that, due to large-scale mining, particularly from the quarries, a lot of variable extraneous impurities will come that will not be constant. Therefore, a pre-dressing stage is necessary just to eliminate the dirt and hard stones which would lead to operational problems in the coal preparation plant. There may be many ways of removing this matter, either by hand-picking or dry selective breakage, or even with the application of jigs. In any case, pre-dressing may be necessary for coals from such open cast mines. Once the coal is crushed to below 2mm for processing, it is obvious that only the coal matter would be crushed and not extraneous impurities. The answer to the question of why we have selected 2mm is that, in normal coke oven practice, 2mm is the top size. It can also be 3mm, but Indian coals are harder as compared with other coals and hence it is difficult to get the correct size in the coke ovens and we have to recycle and select the proper crusher. We found that if we crush it to below 2mm the additional recovery of clean coal is 10 to 12% The fines production would be less in the case of Indian coals because of its hardness and

hence it may be advantageous to move from 3mm to 2mm top size. We would not advocate crushing to below 2mm if the coal were softer than typical Indian coals.

Regarding the second question, that is, heavy medium cyclones vs jigs -- jigs have certain limitations and even the modern jigs cannot treat coals having extremely difficult cleaning characteristics. There will be a lot of misplacement which will prevent maintaining the proper quality of clean coals. One way is to clean raw coal using jigs, and certain products from this operation are recycled through either jigs or cyclones for further cleaning. Jigs have a limitation in that it is very difficult to handle near-gravity materials.

C: B. K. Mazumdar: I would like to make some observations regarding the questions and answers in this session. To put the subject in proper perspective, I will tell you that Mr. Bose was the Chairman of the Ninth Internaticnal Coal Preparation Congress and naturally his views on coal preparation vis a vis problems in the Indian scenario are of importance. Regarding the question as to do we have to live with this 19-20% ash so-called clean coal in India, it is being tackled in this Indian program and

the flow sheets apparently made out that the final product will have clean coal containing 18-19% ash, which has led to this question. In Europe or America no one will touch this coal. Indian coking coals in the lower seams of the Jharia coking fields hold nearly all the prime coking coal in India. The upper seams can be cleaned by ordinary densimetric principles but the lower ones are very difficult to wash. The intrinsic ash, including the extraneous matter, would range anywhere from 25 to 35%, the average being 30%. Hence, Mr. Chakravarti started with 33% ash and provided a flow sheet. His idea is to combine these heavy medium cyclones with oil agglomeration. Last year in discussions with Mr. Bienstock, Mr. Deuerbrock and others, it was observed that in America there was considerable development as a means to tackling fine size coal, but this is irrelevant. Unless you grind the high-ash coking coals of India to as fine as 0.1mm, the mineral matter is not liberated from the physical chemical matrix of the coal. Coal has to be ground even finer than 0.1mm and, adapting all the sophisticated techniques, either froth flotation or oil flotation before heavy medium cyclone, we still have to live with 18% to 20% ash content -- unless, of course, you are prepared to sacrifice the yield. If you want to have a clean coal with ash of 14-15% I am afraid

your yield would hardly be 40-50%. So we have to strike a compromise. However, there is a solution --chemical cleaning of coal. In our institution we have developed this chemical process -- something akin to that developed at Battelle Columbus. Coal and alkali slurries are heated to temperatures not exeeeding 120-130C for one and a half hours and then washed with dilute sulfuric acid. Technologically there is no limitation to this coal preparation. Coal of any ash content can be demineralized almost ashless by this technique. In the American approach the whole contention is different. You don't have to worry about the mineral matter content since, by ordinary densimetric principles, you can remove most of the mineral matter because it is extraneous in nature and comes because of coal mining. The problem is desulfurization and from that point of view Battelle Columbus took up this work using alkali reaction. But their technique is completely different from ours. They grind the coal as fine as possible and mix it with concentrated alkali and treat it in an autoclave under pressure of 50-100 atm and at a temperature of 275-325C. They claim that 50-60% of the sulfur is removed and in the process the mineral matter is also removed. In the Indian process, we do not grind the coal fine -- we crush it to 3mm, treat it with alkali

in a concentration of 60-70% by weight and it is an atmospheric process. Here the alkali penetrates into the physical matrix of the coal, attacks the mineral matter preferentially and converts the aluminum silicates to sodium aluminum silicate, which is soluble. We require two chemicals, caustic soda and sulfuric acid. To make the process more economical, the cost has to be retrieved largely by the recovery of by-products and hence total utilization. We can recover from the mineral matter sodium sulfate, aluminum sulfate and silica gel. If we have a market for this, we get the coal almost for a song. Probably this is the ultimate solution.

Coming to the size of 2mm, this size consists of coal charged to coke ovens which predetermines the ultimate strength of coke which is so very important for blast furnace operations. We have to assure its impact resistance, its abrasion resistance, which is determined by the size concept. To charge too fine a coal into the coke oven will not only create a dust problem but also will effect the coke oven. With the oil agglomeration technique which has been developed, there has been a considerable improvement. Although at the moment we charge fine coal -- 100-200 mesh size --later we will be in a position to use 2mm. Probably

this oil-agglomerated clean coal can be blended with top-size coal and coke can be made.

C: A. K. Chakravarti: Regarding the size, normally in coke oven crushers, either hammer or impacted, the feed size can be 5 and 6 inch and the product size more or less 3mm. If it is a hammer type of mill, the size reduction can be very wide but, for other crushers, like a roll crusher or any gyratory crusher, the size ration will be very narrow. If too much of fines is there in the coke oven feed, the bulk density will be low and the coke will not have sufficient strength. But with improved coking technology like stem charging, the good quality coke can also be prepared. One plus point for oil agglomeration is that it will retrieve the middlings or sinks coming out if oil agglomeration is applied and clean coal recovered. The product will have low moisture and good coking propensities because we have seen that, from the middlings, the clean coal retrieved has good plastic properties because of the presence of oil. The oil agglomeration not only dewaters the coal to a low extent, that is, 10% moisture by gravity drainage, but also the size is agglomerated to 1.5 to 2 mm and dense agglomerates having 1.3 specific gravity

can be obtained. We have numerous data on cleaning by the oil agglomeration technique and the clean coal recovered from the middlings has good coking propensities. Therefore the combination of heavy media cyclones and oil agglomeration definitely has some potential whereby two products will be obtained, middle products will not be there, and high yields as high as 70% can easily be obtained. However, the coke oven technology needs to be modified to take the overall clean coal.

Q: S. K. Bose: Would you like to crush all the coal to 2mm as you are proposing or would you like to treat the coal in a conventional process, remove the clean coal, and then treat the rest of the coal after crushing to 2mm and treat it in the manner you like?

A: A. K. Chakravarti: This is very pertinent since we should not crush coal if we do not get any benefit. There are some seams where we do not get the advantage but there are definitely some coals wherein crushing from 13mm top size to 2mm top size can produce a lot of benefit. It depends on the nature of the coal. For the sake of economy we should use all the conventional types of equipment and, in case we can improve the yields, partly treat the coal by crushing to smaller sizes.

C: B. K. Mazumdar: The lower seam is a difficult coal and we can crush it to normal size, wash it, then from 30 to 35% clean coal will be retrieved with 17 to 18% ash and the rest may be treated to this technique.

Q: B. K. Mazumdar: I would like to ask Mr. Rich Killmeyer his observations on the Indian situation with regard to the difficult problems of coal washing.

A: R. Killmeyer: Let me try to relate the situation to ours in the United States. Our coals clean fairly easily down to 10% ash, whereas in India they clean fairly easily down to 20-30%. The objective of the DOE coal preparation program is now to super clean the coals down to 1% ash or less so that we can replace fuel oil with coal-water slurries, for instance. It is very difficult to go down from 10% down to 1%, just as it is difficult to go from your 20% down to 10%. Both problems involve ultrafine coal crushing. Advanced beneficiation techniques work on ultrafine coal, and the whole objective of our coal cleaning program is to develop these ultrafine cleaning processes. Even beyond the use of heavy medium cyclones, which work on coal down to 100 mesh, we are trying to develop processes that can handle ultrafine

coal to be crushed to say 100 microns or even 20 microns top size. We are working on several different techniques to clean this -- one is two heavy liquid cyclones. Instead of a magnetite slurry you use a true liquid heavier than water -- an organic liquid or freon or salt -- and these work very well on coals which are top size of 100 mesh by 0. Again this is advance of the state-of-the-art.

Another technique we are looking at is very similar to the oil agglomeration, something we have called selective coalescence. It is very generic oil agglomeration. It simply means you are trying to coalesce ultrafine particles of coal and leave the mineral matter and the pyrite dispersed in the water, just like an oil agglomeration except you do not have to use oil. You can use freon, an organic solvent, liquid carbon dioxide, or some exotic type of liquid which will clean the ultrafine coal particles. Then you just regenerate the agglomerating agent and use it again. The problem with oil agglomeration is that the oil stays with the coal and this is very expensive. Of course, the third method that we are funding a lot in DOE is chemical coal cleaning. As was discussed, this is one technique that we have found does work very well -- the TRW gravimill process has clean coals down

to .1% ash, removing virtually all the pyrite and it removes up to 80% of the organic sulfur, which is our main concern. Certainly chemical coal cleaning is a possiblity but it is also very expensive, as has been mentioned. That is our program in a nutshell and as you can see it very well simulates the problems here. It is a matter of ultrafine coal cleaning, developing new techniques and, as Mr. Bose stated, we would envision any type of advanced coal cleaning being preceded by an initial conventional stage where you clean all the rock out -- a very coarse size 1.80 or 2.0 specific gravity -- and go into a second or even a third stage of cleaning.

Q: S. K. Bose: I have one question -- is there something developed in Canada in the area of oil agglomeration where they use only 1 or 2 % of oil instead of 6-8%? Can you throw some light on this area?

A: R. Killmeyer: The only thing I know about it is that there are several groups -- Canada is one of them -- who are working on using small amounts of oil by some sort of super dispersing agent which will make very very fine molecules or agglomerates of oil so it can spread itself around a lot easier. I have heard about it but it is very secretive.

C: A. K. Chakravarti: As far as fine coal cleaning is concerned, our flotation or ultra-flotation processes are quite effective for beneficiating coal. But what are the plus points for oil agglomeration? The plus point is that the dewatering problem is easy and by a cheap and simple method we can dewater the coal. The presence of oil improves the coking properties of clean coal which has been recovered from sub-standard coal and the middlings. The oil used to the extent of 1 to 2% will be enough to effect beneficiation but will not be sufficient to give a consolidated hard product which may create problems in handling in coke plants. However, we have recently decreased the dose of oil from 10 to 13% to 7% in oil agglomeration by mechanical improvement -- that is, by increasing the forces responsible for concentrating the agglomerates. By using 7% oil we are getting perfectly spherical 1.5 to 2 mm agglomerates. We are trying to reduce the oil further but it so happens that good beneficiation may be achieved but the product may not have sufficient structural strength for use in the coke ovens.

Q: M. Chakraborty: Mr. Killmeyer mentioned that coal preparation is now approaching coal refining. Another aspect of Indian coals which has not been very much

highlighted is the solvent refining of coal. The peculiarity is that not only is the mineral matter intimately integrated throughout the whole chemical and physical matrix of the coal, but it is non-coking also. But if you resort to solvent refining it will achieve two things. We achieve demineralization below 1% and we upgrade the coal as well. Non-coking coal becomes coking. So I would like to know, what is the possibility of SRC in respect to cleaning of Indian coal?

A: R. Killmeyer: I will have to back off on that one -- I am not a liquefaction man and you are really talking liquefaction there. A solvation chemical process is involved. When I am talking coal refining I am really talking about physical coal cleaning. By coal refining what I really meant was you clean a coal to produce two or three products from the coal preparation plant. A superclean coal, say maybe one-half percent ash; a high-ash middlings and then your refuse product. That is kind of the idea I was trying to get across.

C: M. Chakraborty: To my mind, even if you demineralize Indian coals the problem of upgrading still remains, so we will have to have coking coals. Solvent refining of coals is likewise improved by DOE and Lumas and the

ash removal process has been improved by anti-solvent de-ashing. Maybe we should also look into this area from the Indian standpoint, which may solve our problem.

C: B. K. Mazumdar: I am glad that Dr. Chakraborty has brought up the question once again. As I said, in America tremendous work has already been achieved but in a different context. America has been interested in clean fuel but here, irrespective of the rank of the coal, whether lignite, bituminous or subbituminous, you end up more or less with a similar product. The product is upgraded with the removal of oxygen groups. The coal is depolymerized to an extent so that it is called reconstituted coal and non-coking coal is converted in the process to a highly plastic coal with a softening point of 170. This was all known to Americans in the early 70s. In Pittsburgh the Consolidated Coal Company and Gulf Spencer Company achieved this, but in our Institute we have developed a concept in view of the low softening point and the low mineral content where the idea is to blend SRC with a sub-standard coking coal, such as 33% ash coal, obtained by washing at 1.7 to 1.8 by removing the mineral matter and bringing the ash from 33 down to say 25%. This product can then be blended with SRC which

will add to its fluidity and that will also decrease the ash content in the final coke. From that point of view, the idea is very attractive but somewhat futuristic at the moment.

We have had a very adequate discussion with the participation of all, and I must thank our authors who have made very effective presentations and also thank our distinguished participants who asked interesting questions and made comments which contributed to a very very effective discussion. All the projects under the USAID/GOI have done some preliminary work, spelled out in the program and now comes the time to achieve the objectives of the projects. Thank you very much.

END OF SECOND PANEL DISCUSSION

DEVELOPMENT OF A VILLAGE LEVEL GASIFIER

P. D. Grover
K. K. Baveja
T. R. Rao
P. V. R. Iyer
Chemical Engineering Department
Indian Institute of Technology
New Delhi, India

Development of Village Level Gasifier

P.D. Grover, K.K.Baveja, T.R.Rao and P.V.R.Iyer
Chemical Engineering Department
Indian Institute of Technology
New Delhi-110016, INDIA

To be presented at:

U.S. (Agency for International Development)
and
The Government of India

Second Workshop on

Alternate Energy Resources
and
Development

Coal Conversion and Biomass Conversion

Taj Palace Hotel
New Delhi, INDIA

November 12-14, 1984

Development of Village Level Gasifier

P.D.Grover, K.K.Baveja, T.R.Rao and P.V.R.Iyer
Chemical Engineering Department
Indian Institute of Technology
New Delhi-110016. (INDIA).

1.0 Introduction:

One of the major inputs for increasing crop production is irrigation. In South East Asia and particularly in Indian sub continent, the average land holding per household is extremely small. To provide timely irrigation, in India about 30 million farmers have to depend upon pump irrigation. It is estimated that a typical farmer with land holding of about 2 ha. would require about 2000 KWH of energy (at the engine outlet) for pumping per crop per year. It has also been estimated that, some 70 million households have available but unexploited water sources in the Indian sub continent.(1)

Accordingly, the majority of irrigation pumps installed are of 3-5hp and energised by diesel or electrical power. The increasing costs and non availability of these resources, especially during the peak periods of cultivation, necessitate the development of biomass energy for irrigation pumping. Increased food production results in increased biomass residues available for power. These become more important in a situation where existing resources are already being utilised.

Considering its importance and potentials, a small Village Level Gasifier based on agro-residues is being developed under the Indo-U.S. collaborative programme on Energy.

Although charcoal fired simple gasifiers are commercially available in any size, small scale gasifiers (5HP) working on agrowastes biomass derived fuels are yet to be developed for satisfactory performance.

2.0 Characteristics of Small Agro-Waste Gasifier:

Direct utilisation of Agro-Wastes in small gasifiers is more energy efficient than the charcoal or biomass derived fuel gasifiers but have many limitations. Before these limitations are discussed, the basic requirements of a village level gasifier unit should be thoroughly identified.

To have ready acceptance of a village level gasifier, it should have the following characteristics.

(a) Simple in construction without any moving parts and complicated control instruments.

(b) The material's reliability with minimum maintenance.

(c) Easy to operate without constant attention.

(d) Should withstand different climatic conditions.

(e) The preventive maintenance activities should be simple and inexpensive.

(f) The gas cooling and cleaning equipment should be simple such as gas filters should be fitted with replaceable filters made from locally available materials.

(g) Should have Pollution free and safe operation.

(h) Low cost within the reach of a small farmer.

The limitations of a direct biomass fueled gasifier at Village Level are:

(a) Low bulk density of biomass resulting in specific large sizes for gasifier.

(b) Due to bulk handling, contamination of feed with undesirable inorganic matter.

(c) Due to high volatile contents, excessive formation of tar during gasification.

(d) Necessity of elaborate gas cleaning appliances, thereby increasing costs and operational problems.

(e) Tendency for slagging of feed due to high ash content and presence of alkalies in biomass.

(f) Corrosion problems of condenser and cooler due to acidity of tar and condensate in the gas stream.

(g) Pollution problems due to disposal of tar and condensate.

(h) Due to low heat capacity of gasifier, fluctuations in temperature thereby producing gases of varying composition

3.0 Fuel Preparation:

To avoid many of the above mentioned operational and design problems, it is imperative that the agro-wastes should be processed prior to gasification. Therefore, one of important activities for the development of this gasifier is to prepare clean deterred fuels suitable for a small gasifier. The process for making these fuels consists of

partial carbonising, grinding cum mixing of char with suitable binders, briquetting of char and drying of these briquettes. Such briquettes of desired sizes known as "PARU FUELS" can be prepared in mechanised, community level and village level units[2]. Amongst these, the preparation of fuel for village level gasifier in drum charring, a village level operation, is most appropriate. This would enable the farmer to prepare his own supply of fuel from agro-residues available from his fields. This will also eliminate his dependency on others and the transportation problems associated with the procurement of this basic fuel.

In this section, the performance characteristics of a simple drum charring system are presented which have been carried out as a part of development of this project. Rastogi[3] carried out tests with wood chips in a drum charring unit already described[2] and shown in Fig.1.

The operation involves lighting some biomass and followed by adding the biomass materials periodically in suitable batches in the drum till the drum gets filled up. Once heated to a proper temperature, the drum is covered with lid and allowed to cool before the char is taken out.

The material and energy balance for a typical trial run for carbonisation of wood chips is given in Table-1.

TABLE-1: PERFORMANCE CHARACTERISTICS OF DRUM CHARRING UNIT

ITEM	FEED	PRODUCT
Material	Wood	Char
Amount per batch (Kg)	84	21
Higher Heating Value: (KCal/Kg)	4208	6808
Moisture	3.8	0
Volatiles	60.0	18
Ash	0.4	2.5
Energy: (KCal)	354,103	140,930

Time of addition = 2.00 hrs.

Cooling time = 3.00 hrs.

Yield = 25%

Thermal efficiency = 40%

For a typical charring by partial combustion run, the temperature were measured at three points along the axial direction of drum at (a) 17cm, (b) 44cm and (c) 71cm from the base of drum. The temperature at these locations were also measured in radial direction. The temperature profiles as function of time for heating and cooling zone are presented in Fig.2.

4.0 Identification of Biomass for Gasification:

In principle, any type of agro-biomass material can be gasified. However, the choice of agro-residues for direct

gasification in a moving bed gasifier is governed by the moisture and ash contents, ash composition and physical size of material. The Choice of biomass gets further restricted if the biomass is to be pyrolysed in a Village Level Pyrolyser and pyrolysed fuel then used as fuel for gases.

Considering these constraints, the most suitable materials identified so far are:-

(a) Corncobs

(b) Groundnut shells

(c) Cotton stalk

(d) Pine needles

(e) Twigs and leaves

Several experiments have been carried out for determining the fuel characteristics of corn cobs and cotton stalk agro-residues and experimentation is under progress with groundnut-shell material.

Analysis of these materials for finding volatile matter, ash, calorific value etc. are carried out by standard methods. Table (2) gives these values for various fuels.

TABLE-2

Material	Moisture (% wet)	Volatile matter (% dry)	Fixed carbon (% dry)	Ash (% dry)	Calorific Value KCal/Kg (HHV)
1. Corn cobs	48.5	87	12.2	0.8	3248
2. Corn cob stem	58	86	11.4	2.6	3154
3. Corn cob char	-	18-28	75-80	1.5-3.5	7450
4. Corn cob char (from partial pyrolysis)	-	35-40	50-60	2-4	7000
5. Raw cotton stalk	7.5*	71.2	22.1	6.7	3378
6. Cotton stalk char	-	12-20	65-72	12.16	7500

*Sun dried

The corn cobs and cotton stalk materials are pyrolysed under different conditions for obtaining good quality char. Pyrolysis of corn cobs is carried out in a batch reactor by indirect heating. In case of pyrolysis of cotton stalk small samples are taken in crucibles and subjected to pyrolysis at different temperatures. The yield of char from corn cobs (15-30% initial moisture) is around 25% by weight in the temperature range of 300-385°C. In case of cotton stalk the yield is around 24% in the temperature range of 500-700°C.

5.0 T.G.A. Gasification and Pyrolysis Analysis:

Gasification of the fuel materials and chars obtained from these materials under different conditions of pyrolysis is carried in an atmosphere of nitrogen and steam (5:3) in the Staton Redcroft Thermogravimetric balance. Figure (3) shows typical weight loss fraction vs. temperature for normal char and partial pyrolysis char obtained from corn cobs and Figure (4) shows similar plots for cotton stalk materials; indicating the reactivity of these materials at various temperatures. The pyrolysis and steam gasification results of cotton stalk and cotton stalk char are given in Figure (5).

From the above investigations, the following conclusions can be drawn.

1. The optimum temperature range for obtaining best quality and yield of char is 300-350°C in case of corn cobs and 550-650°C in case of cotton stalk.
2. The reactivity of corn cob char represented by the action of steam with carbon begins at 600°C and becomes rapid at 750°C onwards.
3. The reactivity of the char obtained from partial pyrolysis starts around 400°C and progressively increases until 750°C and above this temperature it becomes quite rapid. This shows that partially pyrolysed char is more suitable for gasification than the biomass itself.
4. For char obtained from cotton stalk, the temperature

at which the reactivity begins depends upon the pyrolysing temperature conditions and ranges from 300°C-600°C.

5. In general, the reactivity of these char samples increases gradually upto a temperature of 700°C and becomes rapid after this temperature.

6.0 Conceptual Design of Gasifier:

Taking into consideration the important and distinct features required for the development of a Village Level Gasifier, a conceptual design of this unit is proposed. The basis for its design is given in Table (3).

Table-3 : Basis for the design of gasifier

Type	: Down draft gasifier
Fuel	: Carbonised briquetted fuel (PARU) H.H.V. = 18.8 MJ/Kg; ash = 10%
Duty	: 5 hp engine pump irrigation (8 hrs/day)
Engine	= Spark ignition/compression ignition of efficiency = 20%.
Bulk Density of fuel	= 0.5 Kg/litre

6.1 Design Calculations:

1 Kg of briquetted fuel (upto 10% moisture) should give about 2.4 Nm^3 of producer gas and 1Nm^3 of producer gas roughly contains energy equivalent to 2 hp-hr. (5370 KJ).

With 20% efficiency of the engine, the amount of fuel required for 5 hp engine output is equal to 5 Kg/hr. and the amount of fuel required for 8 hrs. operation is 40 Kg. Based on bulk density of fuel equal to 0.5 Kg/litre, about

20 liters volume is required to accommodate 10 Kg. of fuel. Accordingly, about 27 liters of volume for fuel in the gasifier has been provided. This implies that about 10 Kg. of fuel has to be added after every 2 hours.

Based on specific gasification rate of 0.45 Nm^3/Cm^2. hr. (variation reported[4] between 0.3 - 1.0 Nm^3/Cm^2,hr), the throat diameter of 6cm. has been provided.

Sufficient volume has been provided for ash collection for 8 hrs. operation.

Various types and configuration for air inlet, gas outlet, ash removal and fuel addition are possible and being used for various gasifier. In the present design it is decided to adopt such parameter in a way to meet the objectives outlines earlier.

Combustion zone, where temperatures may very from 1000-1500°C is designed to be made from refractory bricks, properly shaped and placed one above the other to give shape as shown in Fig.6. This approach is preferred to having castable refractory blocks for two reasons: (a) Castable refractory cement is expensive in India (b) Traditional craft is available in villages for shaping bricks.

Instead of having air inlet tuyers from side, a central air inlet from the top of gasifier is incorporated for the sake of simplicity. However, to protect the tip of the pipe near the combustion zone, a distributer made out of refractory brick has been provided.

Since, the briquetted fuel has higher ash content of the order of 10% and above, compared to wood charcoal having 3-5% it becomes essential to have a grate shaker and fixed grate arrangement as shown in Fig.6.

All the parts are so arranged that these can be easily dismantled and reassembled by semi skilled farm labour.

Gas Cooler/Condensers:

About 10 Nm^3 of producer gas is generated per hour and it should be cooled to remove any tar and condensable vapours. It is designed to cool the gases from 350 to about 150°C before these enter the filters. For this purpose an air cooled condenser made out of 5cm. dia and 4.5m in length pipe is suitable. Alternately, a water cooled condenser with equivalent surface area made out of standard barrel and tubes is also suitable. However, a dry air cooler is preferable to water cooled condenser because of corrosion problems. The tar and condensate are removed through a water seal which also acts as safety device as shown in Fig (7).

Gas Filter:

The cooled gas from cooler/condenser is likely to contain some moisture, tar and dust particles. These are removed by passing the gas through a filter made up of a porous bed of rice husk contained in an empty oil barrel. The husk is placed on a grate and the gas is introduced into the drum at the top and is taken out at the bottom. This

arrangement is preferred because the top layer of rice husk bed can be easily replaced after it is found to have absorbed sufficient quantity of tar, moisture and dust particles.

The development work would therefore consist of testing the gasifier, both water and air cooled condensers and the gas filter filled with various type of agro residues. Extensive tests with engine cum pumpset shall be carried out before a suitable design and combination of its various components is transferred to the actual site for field trials.

References:

1. Rogers,P. and Hurst,C. 'Microgasification for small scale irrigation in developing countries' Harvard Uni., Mass. Paper presented at First International Producer Gas Conference Colombo (Sri Lanka), 1982.

2. Grover,P.D. and Baveja,K.K. 'Gasification of Agricultural Residues-Village Level Gasifier-I.I.T. New Delhi-16. Paper presented at First Workshop on Alternate Energy Resources and Development - Coal Conversion and Biomass Conversion New Delhi 1983.

3. Rastogi,S. 'Performance Testing of Drum Pyrolysis System. B.Tech. Project I.I.T. Delhi. 1984.

4. Kaupp,A. and Goss,J.R., State of art from small scale (to 50KW) gas producer - engine systems. Final report to USDA Forest Contract No. 53 - 391R-0-141 editing for publication as a monograph.

QUESTIONS & ANSWERS

BIOMASS SESSION, SECOND DAY

C: O. P. Vimal: Thank you very much, Dr. Baveja. I hope you will agree with me concerning the need for the development of a village-level gasifier for irrigation purposes because with irrigation water we can increase the production potential, and the production of surplus residues could in itself serve as a feedstock for the gasifier. The question arises whether we should use this route for making charcoal because, through this route, at least we can overcome the problem of tar formation. This technology itself is subject to four tests, one is that of energetics -- energy being put out; secondly, the material balance; thirdly, I would say, economics; and fourth, the efficiency factor. So should we go in the direction of the direct use of the agricultural residues? Do we have the technology to overcome the tar particles problem? Dr. Phatak has given some glimpses of the technology developed there and we are going to see that technology. The other picture is the route of making charcoal and using it in the gasifier. This technology

is well-known but, if it can support the criteria that we are going to set from the point of view of material balance, energy balance, economics and efficiency, I think this will solve our major problems. This is open for discussion now.

Q: B. K. Mazumdar: I have a comment and a question. The Chairman has set the tone for what I was going to say -- the material balance, the energy balance, and ultimately what is the cost benefit of the production of power for irrigation. There is a lot of agricultural waste, but should we gasify it and produce the char in situ and or take the other route? Instead of our gasifying the residues, why can the micro-organisms not do it? Instead of our doing the gasification of the agricultural residues, why should we not employ the bugs, the micro-organisms, to do it for us? This will give us a rich gas with a methane content of the order of 50-60% and a heat value of 600 Btu/cu.ft. and, in the process, you get a compost which is a very good nutrient.

This will have a snowballing effect. Therefore, which route is preferable?

A: K. K. Baveja: I will not contest the advantages, as Dr. Vimal pointed out, that in the case of utilization of

biomass for gasification and irrigation purposes, you have a different situation at each place. Any technology will have certain advantages and certain disadvantages, including this biogasification which has some advantages but, in terms of technology, also has some disadvantages. We are working on a parallel route for the utilization of biomass for a specific purpose. When we are talking of this for irrigation purposes, in this context we are speaking only of the gasification of charred residue.

Q: B. K. Mazumdar: Isn't that a wasteful method since 20% of the carbon is utilized for gasification and the rest is going to waste?

A: K. K. Baveja: In terms of energy efficiency during charring, we are using only 40 to 50% of energy and the remaining 50 to 60% is being lost during charring. But then we get some other advantages, as I mentioned during my presentation.

Q: O. P. Vimal: Any other question?

Q: P. P. Parikh: Which atmosphere have you used in your thermogravimetric test? Do you find any difference in

your results?

A: K. K. Baveja: We have used nitrogen atmosphere and steam. The weight loss that you get is different in different cases with time or temperature.

Q: P. P. Parikh: But during pyrolysis, what is the situation you are going to face and is the TGA representing that?

A: K. K. Baveja: The TGA is not exactly representing that, but from it we do hope to find out some optimum conditions for gasification. In the case of pyrolysis or gasification, we are going to use partial combustion with a limited quantity of air and charring, in fact, occurs in the absence of air.

Q: Dr. Shah: What is the volatile content of your char? What will be the tar content after clearing, because you are claiming that the tar is going to be much less? Do your measurements show that? What is the compression strength of your particular mass in the reduction zone where it is likely to crumble?

A: K. K. Baveja: Regarding the volatile matter in the charred fuel which we use for gasification purposes, we

do not intend to remove the volatile matter completely; in fact, the volatile matter in the char would be about 10 to 20%. This means that the fuel we use during gasification will still contain 10 to 20% volatiles. We want to retain this volatile matter to improve thermal efficiency of the system. Regarding tars, we have not actually carried out experiments in the gasifier yet; we are experimenting now with the Missouri gasifier we have received from the U.S. and we are going to develop our own gasifier. We feel the tar problem will not be there when we use pyrolized briquetted fuel for the gasification. In the downdraft gasifier, these gases are passing through the high temperature zone and during this the tar will crack up. I do not think the tars will present a problem.

C: O. P. Vimal: The question of tar is very important and I think these measurements have not been done as yet and subsequently should be addressed in next year's Workshop. Measurements of these aspects is one of the important tasks because just to carry out experiments is one thing, but to identify the amount of tars, volatile matter, etc. is what we are looking for. I think with the equipment we have received from the U.S. we should be able to address some of these questions; in fact, they have received the gasifier only recently. Hence

it is premature at this stage to answer these questions and I am sure they will be taken note of during the course of the work.

Q: What is the activation energy of the TGA curve?

A: I do not have the actual figure, but can let you know later.

Q: Could you explain the feasibility of the system from an economics standpoint?

A: As I mentioned, the economics of the system is for special applications for remote areas where you are not in a position to avail yourself of power and diesel. Also, the rising costs of these fuels is an important consideration, and we will work out the economics at a later date.

DEVELOPMENT OF SMALL SIZE GASIFIER - C.I. ENGINE SYSTEM FOR AGRICULTURAL ENERGY NEEDS

H. B. Mathur
Mechanical Engineering Department
Indian Institute of Technology
New Delhi, India

DEVELOPMENT OF SMALL SIZE GASIFIER - C.I. ENGINE SYSTEM FOR AGRICULTURAL ENERGY NEEDS

By

Prof. (Dr.) H.B. Mathur
Mechanical Engineering Department
Indian Institute of Technology, Delhi
Hauz Khas, New Delhi-110016, INDIA

PAPER PRESENTED IN SECOND WORKSHOP ON ALTERNATIVE ENERGY RESOURCES AND DEVELOPMENT COAL CONVERSION AND BIOMASS CONVERSION, HELD IN NEW DELHI FEB. 4-7 1985

DEVELOPMENT OF SMALL SIZE GASIFIER - C.I. ENGINE SYSTEM FOR AGRICULTURAL ENERGY NEEDS

By

Prof. (Dr.) H. B. Mathur
Mechanical Engineering Department
Indian Institute of Technology, Delhi
Hauz Khas, New Delhi-110016, INDIA.

1. INTRODUCTION:

Internal combustion engine fulfil most of the energy requirements the world over. They rely almost entitely on oil for their functioning. In this way, most of the energy needs in the trnsport and agricultural sectors come from oil. For example, in India, nearly fifty percent of the agricultural energy needs and seventy-five percent of the transport, consisting of rail, road, marine and air, are oil dependent.

With the growing number of these engines the oil consumption has also been increasing rapidly. The global oil consumption increased by sixty percent between 1950 and 1976 and it continues to grow inspite of oil conservation drives and use of more and more efficient engines. In India the oil requirements are expected to grow from around 35 million tonnes at present to about 100 million tonnes by 2000 A.D. This could take the oil import bill from

Rs.6000 crores at present to about Rs.30,000 crores by the turn of the century. Taking into account the fact that even the present balance of payment problems arise mainly due to oil, an increase in the oil import bill could completly cripple the nations economy.

The problem is not just confined to developing countries like India but it has global dimensions. The world reserves of crude oil are depleting very fast. The known recoverable petroleum resources of the world are estimated at about 80 billion tonnes and at the present rate of consumption these would hardly last for twenty five years or so. Hence scientists and technologists all over the world are looking for fuel oil alternatives.

One of the viable alternatives to oil is coal. Worlds coal reserves are estimated to be large enough to last for another 150 to 200 years. Coal however cannot be used in internal combustion engines so long as it is in the solid form. Liquefaction or gasification of coal can permit its use in engines easily. Coal liquefaction is a complex and capital intesive process which still requires a lot of R&D effort to make it a viable commercial proposition. A more promising alternative is the gasification of coal in the form of producer gas. Producer gas can be a viable alternate fuel for internal combustion

engines and its use can go a long way to meet the energy needs of certain vital sectors of economy and certain important regions of the country.

Besides, coal, producer gas can be made from almost any solid fuel-wood, peat, as well as industrial and agricultural wastes such as bagasse, wood shavings and rice husk. It is normally generated by blowing a mixture of steam and air over briquetted biomass or burning wood or red hot charcoal. The main combustible constituents of producer gas are carbon monoxide and hydrogen. Their proportions depend on the type of fuel used, but are normally around 25 per cent and 10 per cent respectively.

The main advantages of producer gas are that it can be made from raw materials c available in plenty, it can be used as a substitute fuel in internal combustion engines with appropriate engine alter-ations and its use as fuel does not cause much environmental pollution. Hence its efficient utilisation in engines can go a long way to meet the growing problems of fuel oil scarcity and exhaust pollution.

Whereas producer gas operated spark ignition engines have been widely used, little or no work has been done on utilisation of producer gas in small size diesel engines. Producer gas fueled small size C.I. engines

have a vast potential especially in the agricultural sector of developing countries. There are, for example, about 2.5 million diesel powered irrigation pump sets currently in use in India, and if these can be converted to run on producer gas a substantial saving of the scarce diesel oil can be achieved.

With this in mind a project has been undertaken in the mechanical engineering department of IIT Delhi on "Producer Gas Powered Small Utility Engines". This DNES sponsored and US aided project is mainly involved with studies relating to efficient substitution of producer gas in existing small horsepower compression ignition engines, and the effect of this substitution on engine performance, exhaust emissions and material compatibility. This paper brings out some of the salient features of the work completed in this project so far.

2. DEVELOPMENT OF SMALL CAPACITY GASIFIER UNITS:

A suitable and reliable small size gasifer is a pre-requisite for any R&D work on utilisation of producer gas in engines. Little or no work has so far been done in the country on the design and development of small capacity gasifiers suitable for operating engines of 3 to 5 horsepower range, and no such unit is commercially available in the country.

As a first step it was therefore decided to develop a small gasifier and gas cleaning system of our own to provide the required quantity and quality of gas for continuous operation of 3-5 horsepower engine. Any fluctuation in the quantity of the gas could be detrimental to the performance of the engine. Large variations may even cause the engine to stop. The air fuel ratio has to be maintained close to the stoichiometric ratio, so that optimum engine performance is obtained.

Development of a small size producer gas plant required considerable R&D effort to overcome problems associated with variation of fuel composition and characteristics, fuel charging and its efficient combustion, cleaning and cooling of the gas produced. For this purpose a couple of small size gasilifer units of different types were designed and fabricated. Studies were carried out with the help of these units to optimise and standardise various plant designs and operating parameters such as blast re-tention time, fuel lumpsize, bed height, mass flow rate, blast saturation temperature etc.

These studies enabled the development of an optimum design for a down-draft gasifier of adequate capacity. A couple of such gasifiers were fabricated along with the gas cooling and cleaning units. Two sets

of experimental test rigs were set up with fully instrumented gasifier engine systems for carrying out tests relating to the quality and quantity of gas produced as also the performance and emission characteristics of the engine when operated on this gas, as a duel fuel engine.

Fig. 1 through 3 show the photographs of the gasifier gas cooling-cleaning systems designed and fabricated as also the engine set up.

3. UTILISATION IN C.I. ENGINES:

After an optimally designed producer gas plant was installed to provide the required quantity and quality of gas, the next step was to carry out necessary modifications in the engine to enable it to utilise the gaseous fuel. C.I. engines can be made to operate on producer gas by any one of the following methods.

(i) Conversion to otto cycle operation by incorporation of a spark plug. Such a modification can enable engine operation entirely on Producer gas. However it involves relatively complex and expensive changes on the engine, hence it is not attractive and cannot be recommended for existing small horse power compression ignition engines.

(ii) Duel fuel operation by intake system modification permitting induction of gas-air mixture during suction

and injection of appropriate diesel charge, near the end of compression stroke, in the usual manner. There is a minimum diesel pilot charge which is esential to initiate and sustain combustion with producer gas as the main fuel This charge may vary from as low as 10-20 percent to as high as 60-70 percent of its original quantity at rated load. Duel fuel operation requires incorporation of a retrofit in the intake system to achieve induction of gas-air mixture of proper quality and in desired quantity.

3.1 Retrofits for Engine Intake System Modification:

The arrangement for mixing producer gas and air constitutes an important part of the modified engine intake system, because complete combustion and low fuel consumption can be obtained only with proper mixing of air and gas. Various types of arrangements for mixing air and gas were designed, fabricated and tried on the engines, to arrive at the most appropriate arrangement. Two of these retrofits were finally chosen for extensive trials.

Based on these experimental evaluations the design of the retrofit was standardised. It consists of a properly designed venturi system in the air intake and valves for regulating the gas flow and the quantity of the gas-air mixture entering engine cylinder. The venturi system enables engine speed dependent control of the

amount of gas inducted, while the gas valve permits engine load dependent control. Fig. 4 shows a schematic diagram of the standardised retrofit.

3.2 Experimental Set Up and Technique:

In the experiments, a couple of four stroke single cylinder compression ignition engines (having a rated horsepower 5 at 1500 rpm compression ratio 16 and direct injection) of the type most commonly used for farm irrigation, as also a research engine (swirl type combustion chamber and compression ratio 22) having arrangement for wide variation of injection timing, were employed. The engines were coupled to electric dynamometers for measurement of their power outputs. The test rigs were suitably instrumented for accurate measurements of fuel flow rates (both diesel oil and gas), engine speed, air flow rate, exhaust gas composition and temperature etc. The quality of gas entering the engine intake system was continuously menitored using a gas analyser and gas calorimeter. Fig. 5 is a schemetic diagram of the gasifier engine unit experimental set up designed for performance and exhaust emission evaluation of the duel fuel engines.

The engines were operated over various speed-load ranges and various types of tests were conducted to obtain the engine performance data over the entire engine

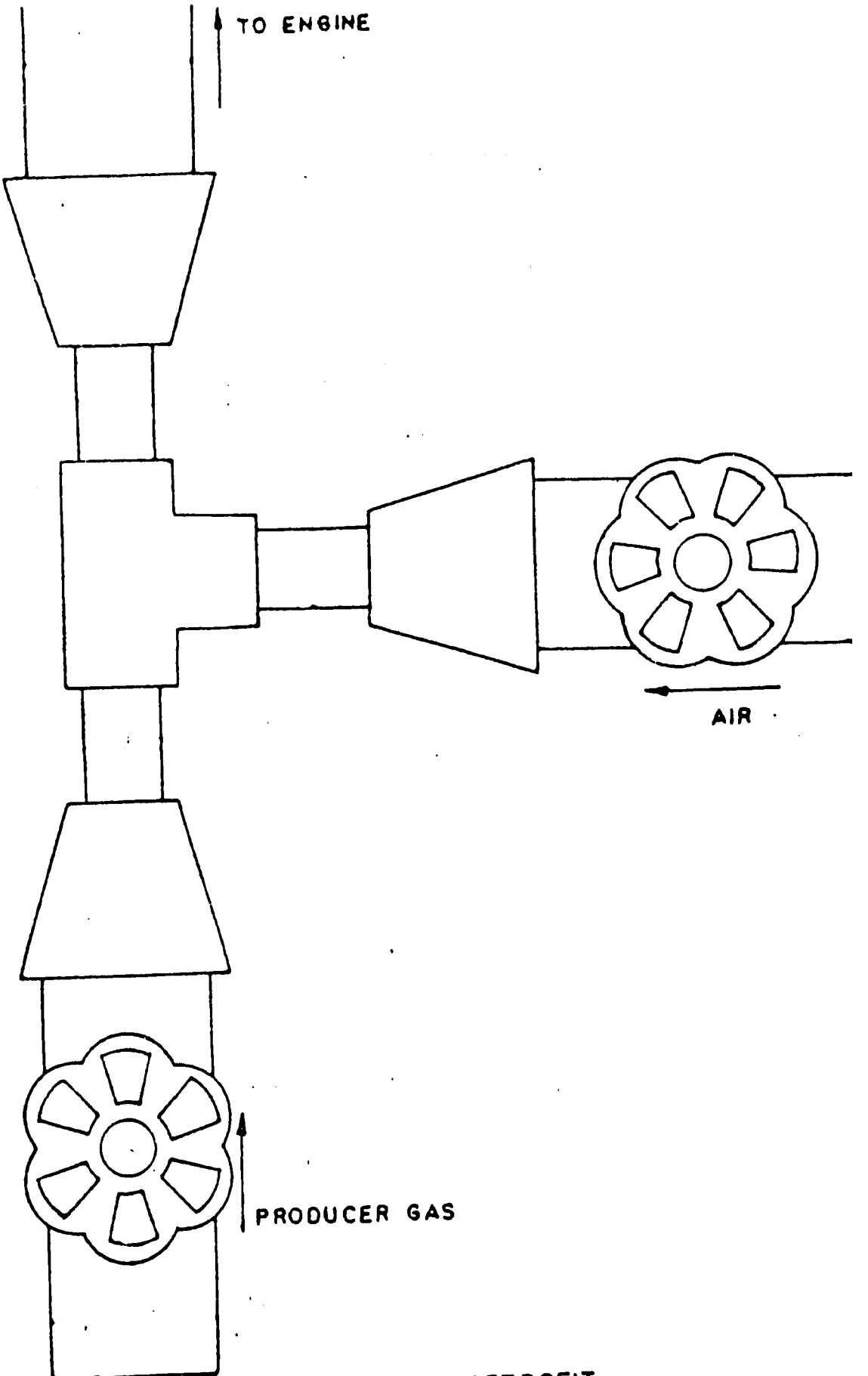

FIG 4 INTAKE RETROFIT

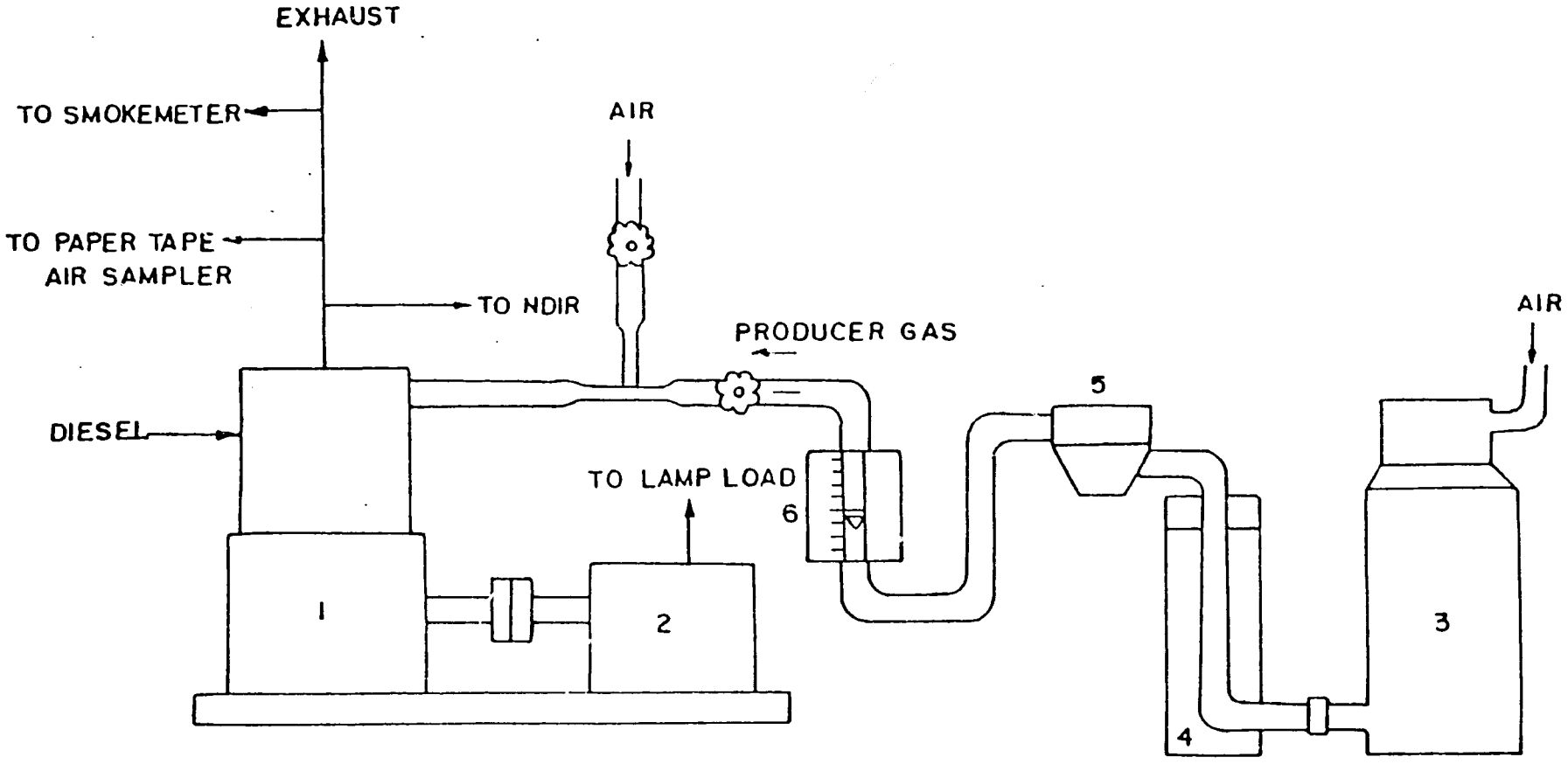

FIG 5 EXPERIMENTAL SET UP

1. PETTER ENGINE
2. GENERATOR
3. DOWN DRAFT GASIFIER
4. COOLING TOWER
5. CYCLONE FILTER
6. ROTAMETER

range of operation, with both diesel neat and duel fuel operation with producer gas as the main fuel. The test techniques were standardised and engine performance and emission characteristics were plotted. Some of the typical characteristics are shown in Fig. 6 through 14, each representative of the various different sets of plots drawn from the extensive experimental data collected under different operating conditions of the three engines employed in the trials as also with different designs of retrofits used to achieve greater degree of producer gas substitution.

4. DISCUSSION OF RESULTS:

Figure 6 and 7 show the engine performance characteristics at the rated speed of 1500 rpm, when operating with diesel neat and with producer gas as bi-fuel respectively. Similar plots were obtained at 1200 and 1000 rpm to cover the speed range of the engine. These plots show that with producer gas substitution the nature of the performance characteristics remains unaltered. There is, however, reduction in the thermal efficiency of the engine. This is due to (i) lower energy density of the producer gas air mixture and (ii) increased pumping losses due to total pressure drop in the gasifier and gas cleaning and cooling systems and pipings. The

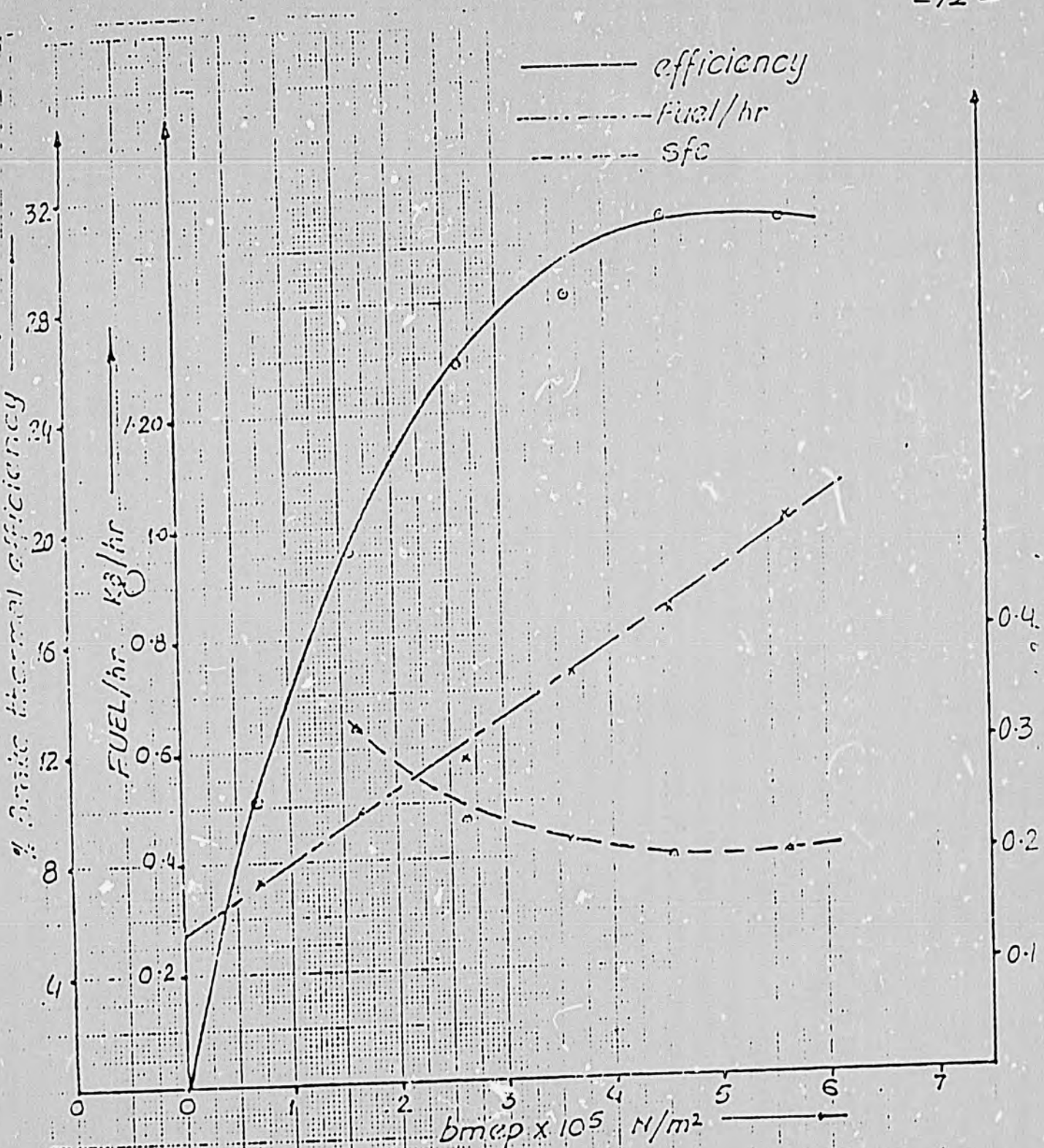

Fig. 6 Variation of brake thermal efficiency, fuel/hr & specific fuel consumption with bmep. Petter engine : 1500 rpm

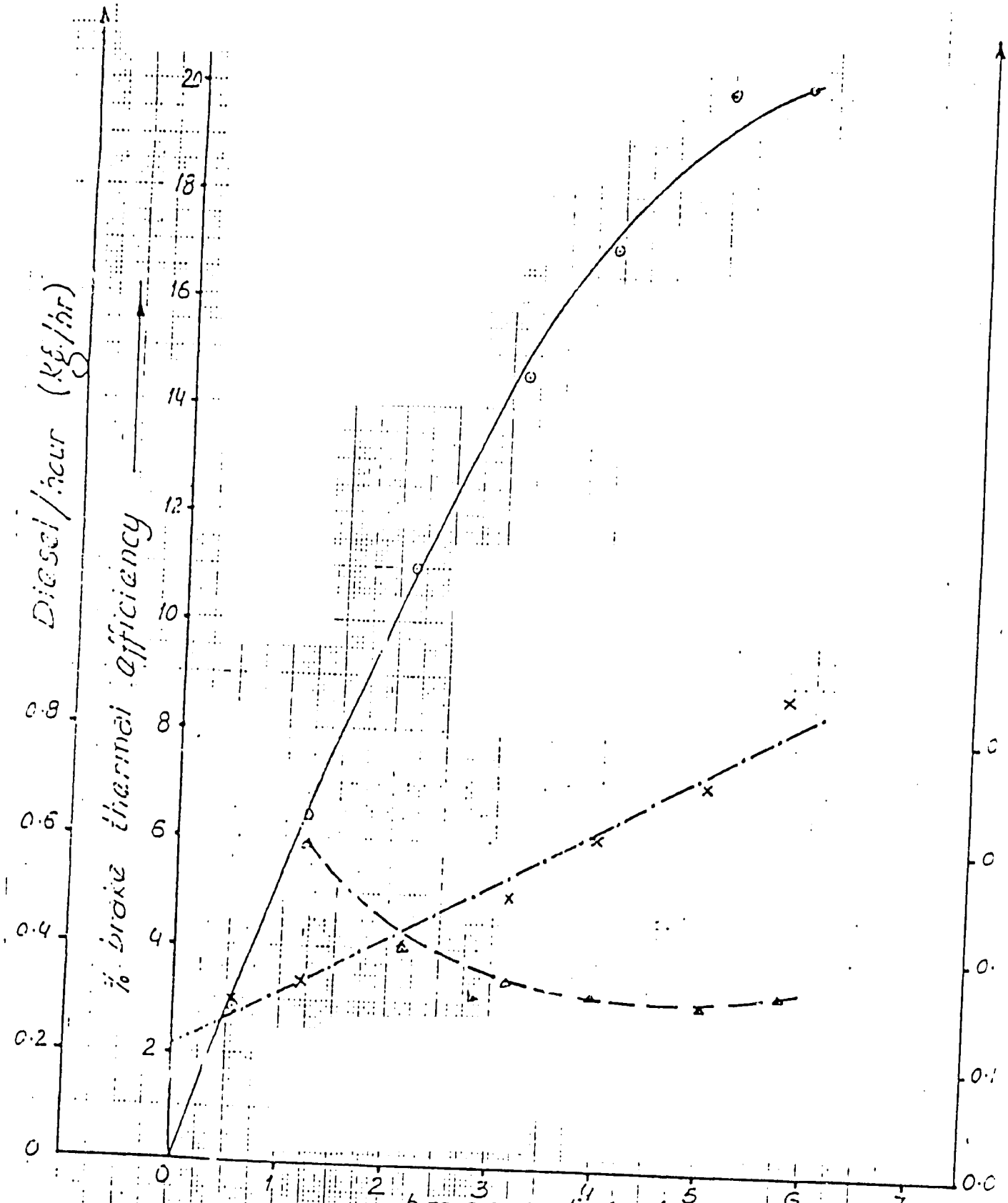

Fig. 7 Variation of brake thermal efficiency, diesel/hr & specific fuel consumption (diesel) with bmep.
Petter engine; dual fuel; 1500 RPM.
Retrofit No. 1.

stoichiometric gas-air mixture has an energy density of 2.5 MJ/m^3 compared to 3.3 MJ/m^3 for diesel-air mixtures. Thus producer gas substitution lowers the heat value of the fuel-air mixture by about 20 percent.

In the operation of the engine with diesel neat there are some mechanical losses which are generally caused by friction of the bearings pistons and various other moving mechanical somponents. With the incorporation of the gasifier and gas cooling-cleaning system on the engine suction side, the engine has to provide all the suction that is necessary to overcome the total pressure drop in this system. Thus producer gas substitution through engine suction results in additional pumping losses which are considerable. This causes loss of engine output and efficiency.

Fig. 8 shows a typical variable speed test plot. In this test the limitations of the retrofit I restricted the maximum energy substitution by producer gas to around 65 percent. The loss is power due to duel fuel operation of the engine is also brought out by the graph. Inorder to achieve greater degree of producer gas energy substitution another improved retrofit was designed and fabricated and employed in the test runs.

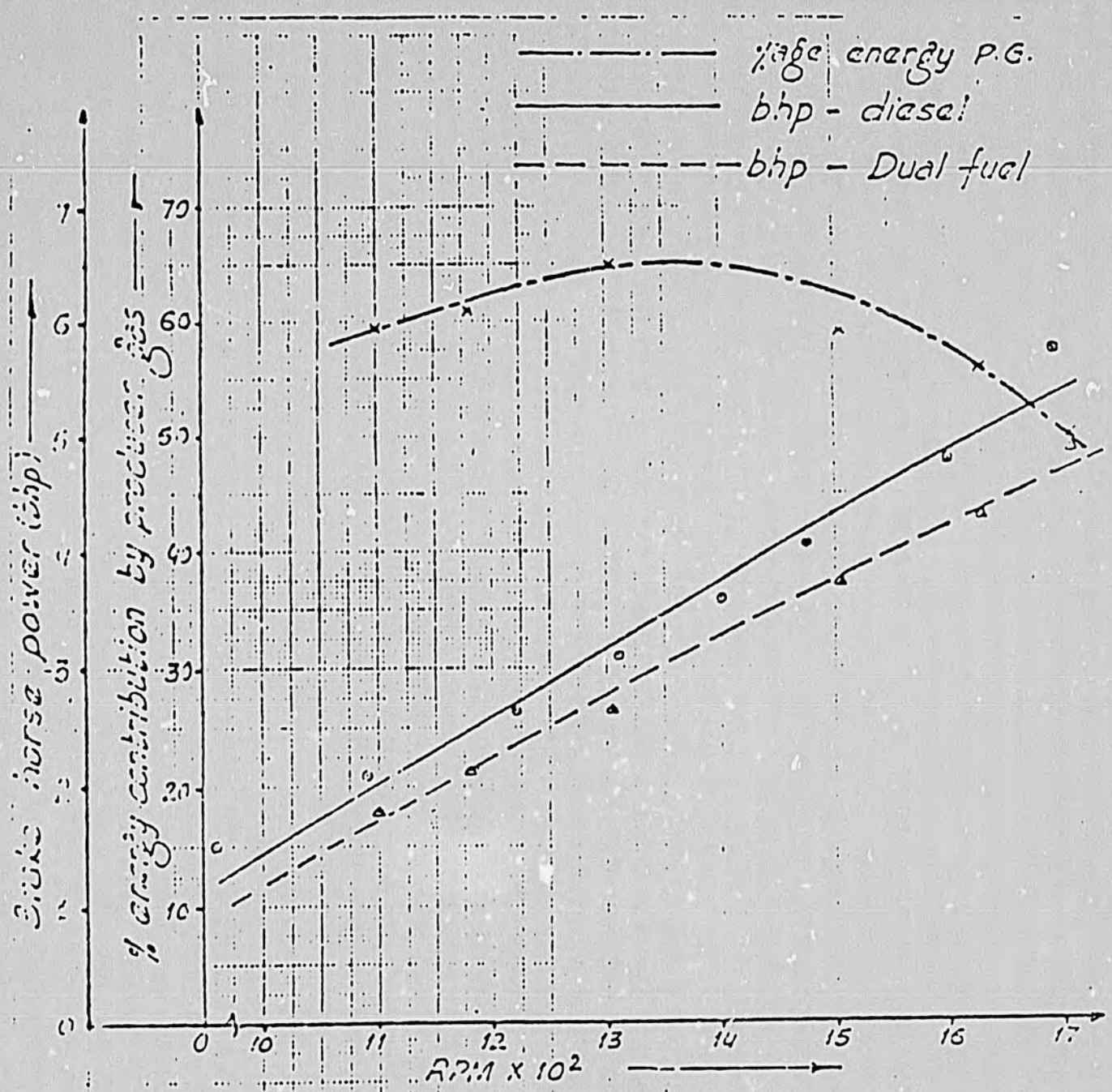

FIG 8 Variation of brake horse power and percentage energy contribution by producer gas with RPM.
PETTER ENGINE
Retrofit no. 1

With the improved design of the retrofit a maximum of 8.5 m^3/hr of producer gas induction rate could be achieved. Fig. 9 is a typical plot obtained from the older of the two 5 hp commercial engines used. This older engine was run with maximum gas flow rates restricted to 3.4, 5.1, 6.8 and 8.5 m^3/hr. The saving in diesel oil consumption at various outputs is brought out by figure 10.

Fig. 11 through 13 bring out the influence of injection timing on the performance of duel fuel engine. These graphs are based on the experimental data obtained from the research engine which had an arrangement for wide variation of injection timing. They show that with an advance in the injection timing the performance of the engine improves considerably. However advancing it beyond a limit results in misfiring, knocking and loss of power. For the high compression ratio, indirect injection engine used, this figure was found to be 43° btdc. Within this range advancing the timing improved engine output, reduced diesel oil consumption and permitted greater degree of producer gas energy substitution.

Fig. 14 is a representative graph showing variation of exhaust carbonmonoxide concentration at various load with diesel neat and with producer gas substitution. Such plots were obtained at 1500, 1200,

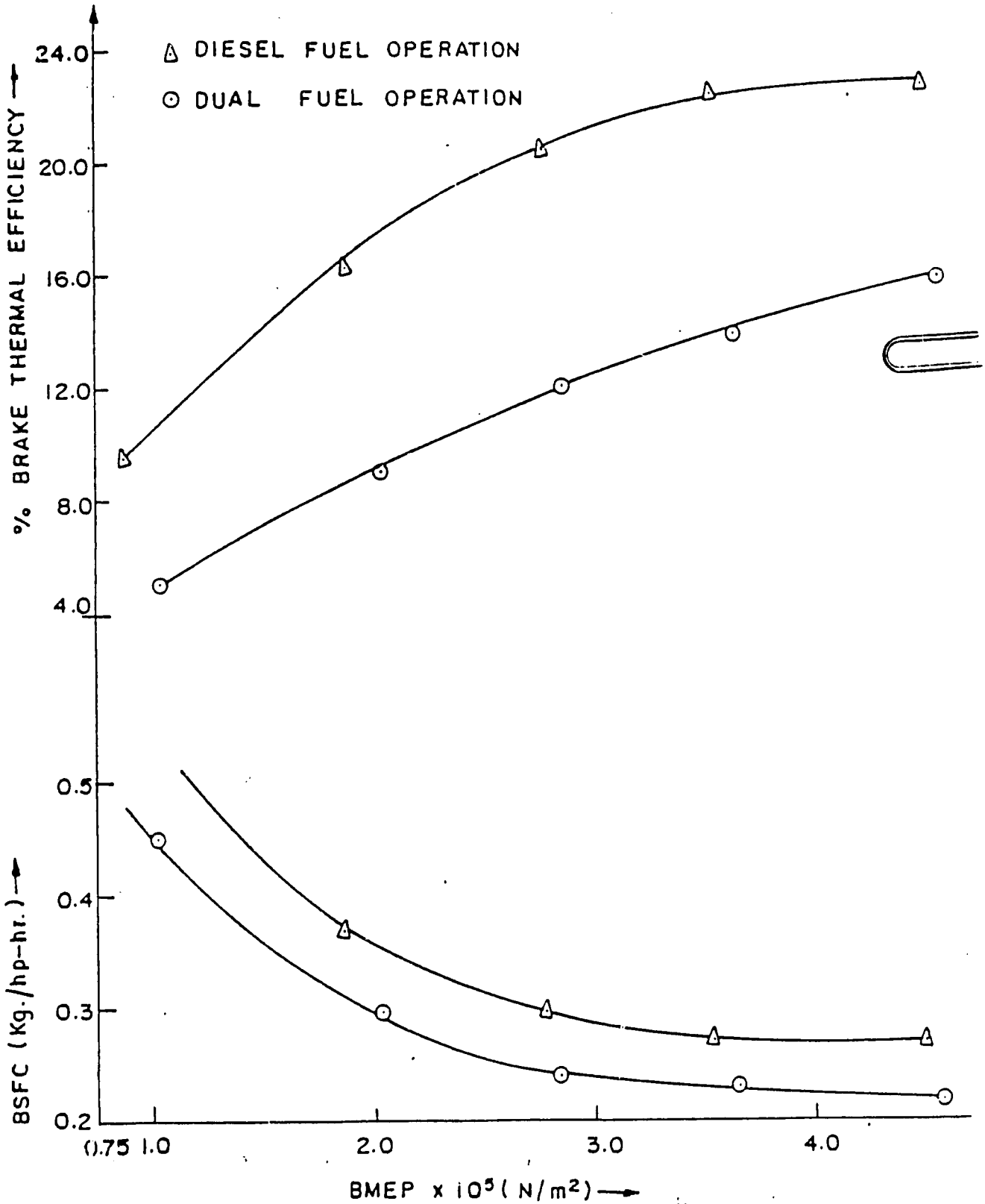

FIG. 9 VARIATION OF BSFC AND $\eta_{TH.}$ WITH BMEP

PETTER ENGINE; 1500 RPM

PRODUCER GAS FLOW RATE: 8.5 m^3/hr.

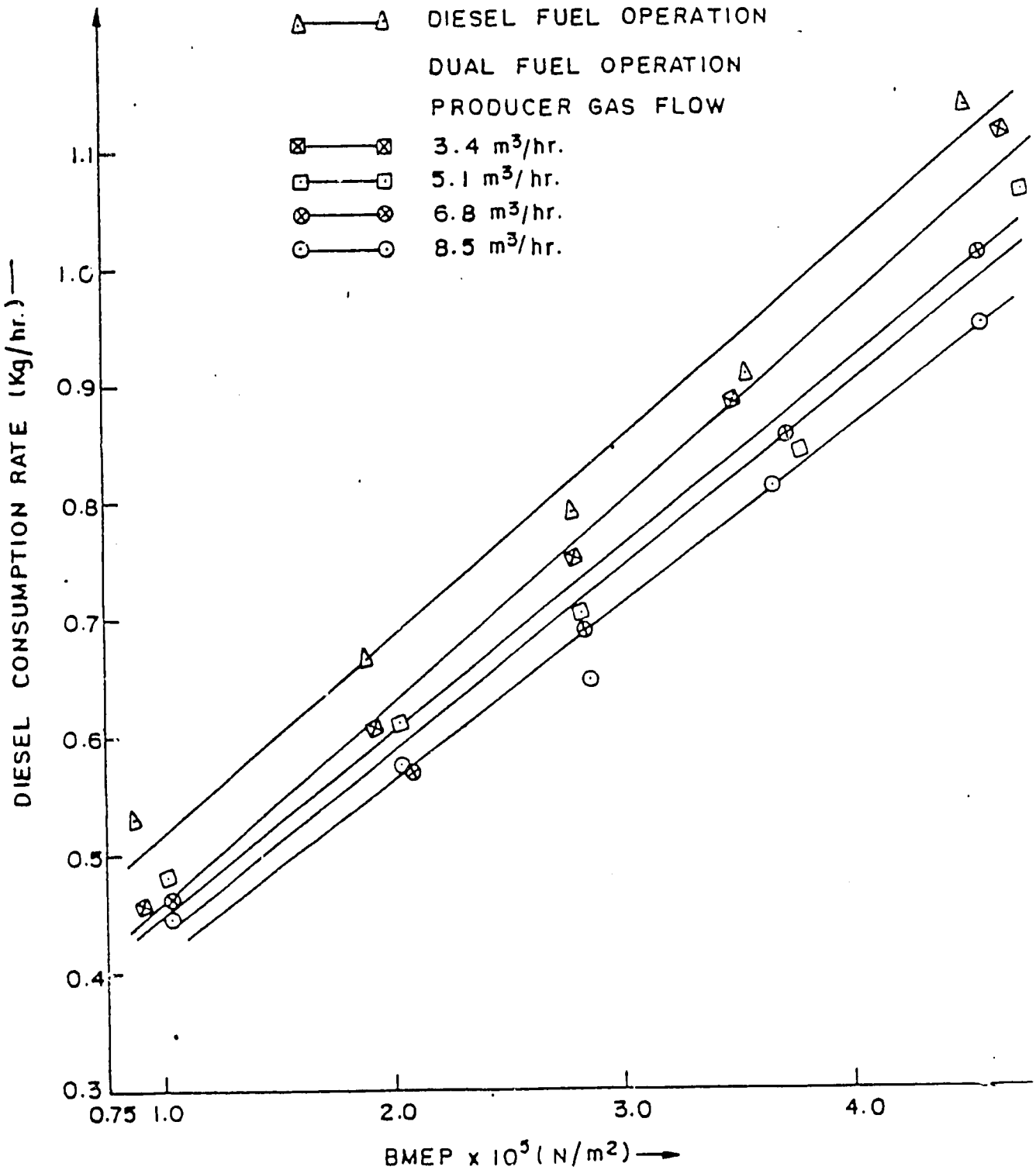

FIG. 10 VARIATION OF DIESEL FUEL CONSUMPTION WITH BMEP FOR DIFFERENT FLOW RATES OF PRODUCER GAS

PETTER ENGINE; 1500 RPM

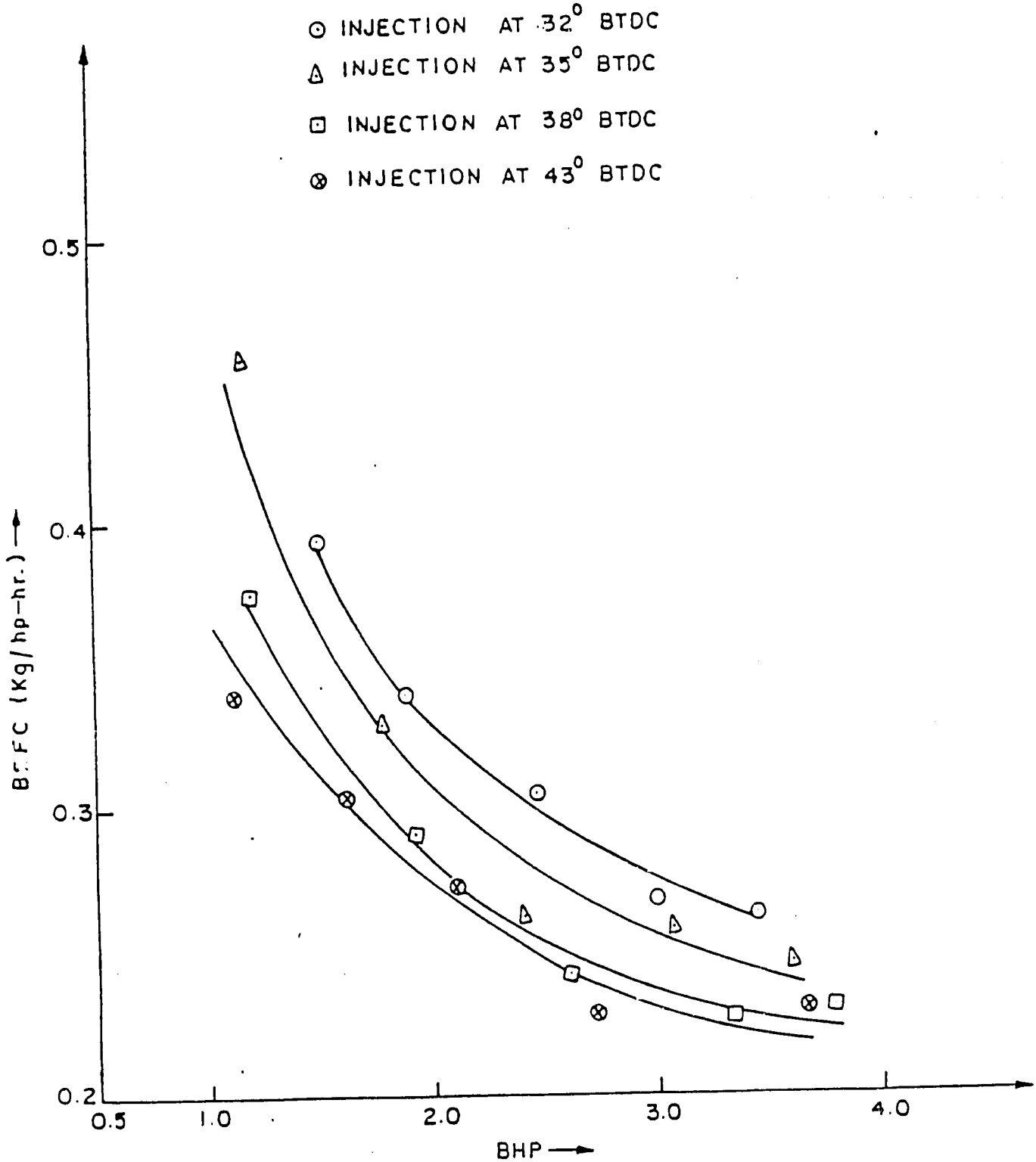

FIG. 11 VARITION OF BSFC WITH BHP FOR DIFFERENT INJECTION TIMINGS

RICARDO ENGINE; 1500 RPM DUEL FUEL
PRODUCER GAS FLOW RATE: 8.5 m^3/ hr.

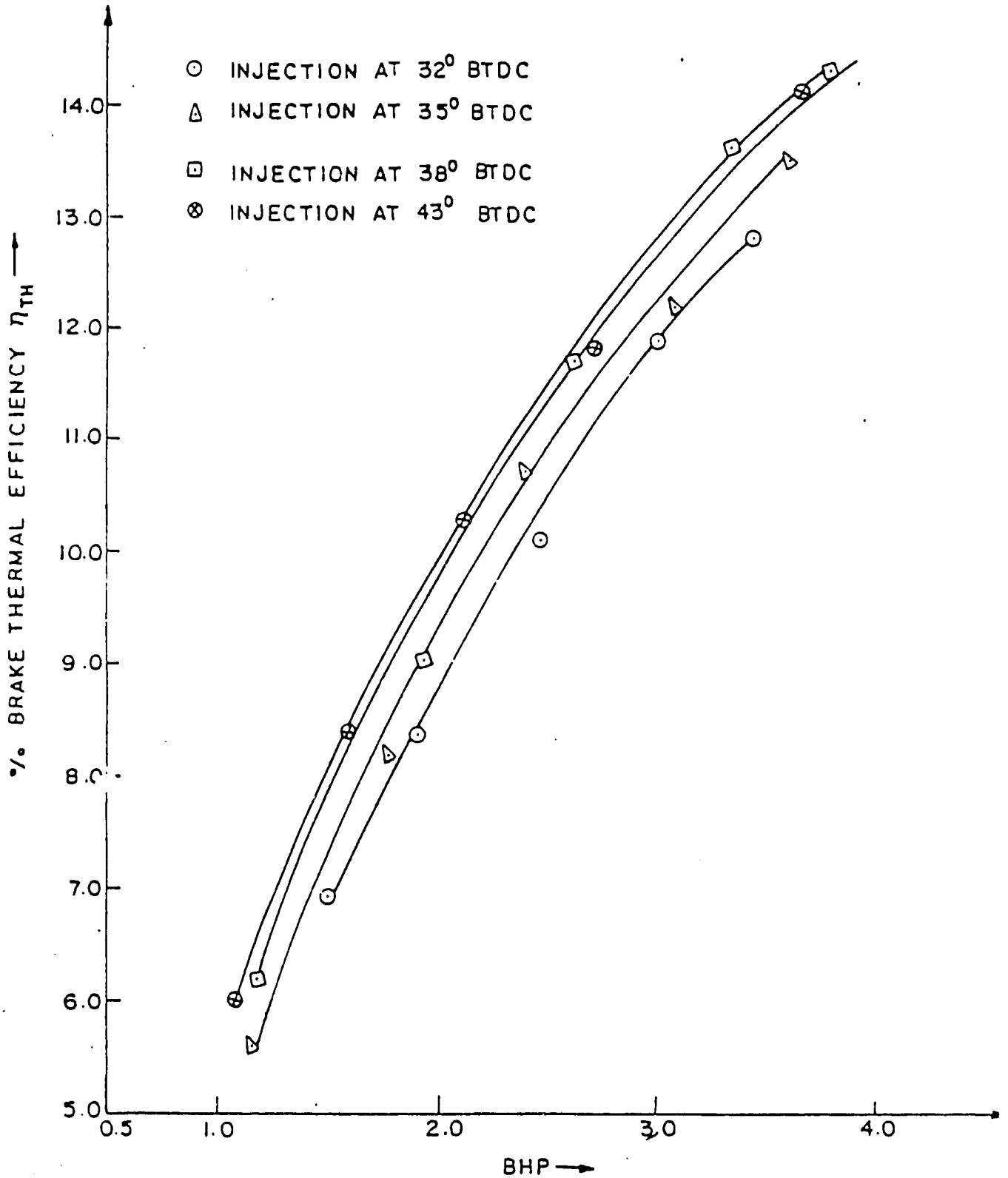

FIG. 12 VARIATION OF BRAKE THERMAL EFFICIENCY WITH BHP FOR DIFFERENT INJECTION TIMINGS RICARDO ENGINE; 1500 RPM DUAL FUEL PRODUCER GAS FLOW RATE: 8.5 m^3/hr.

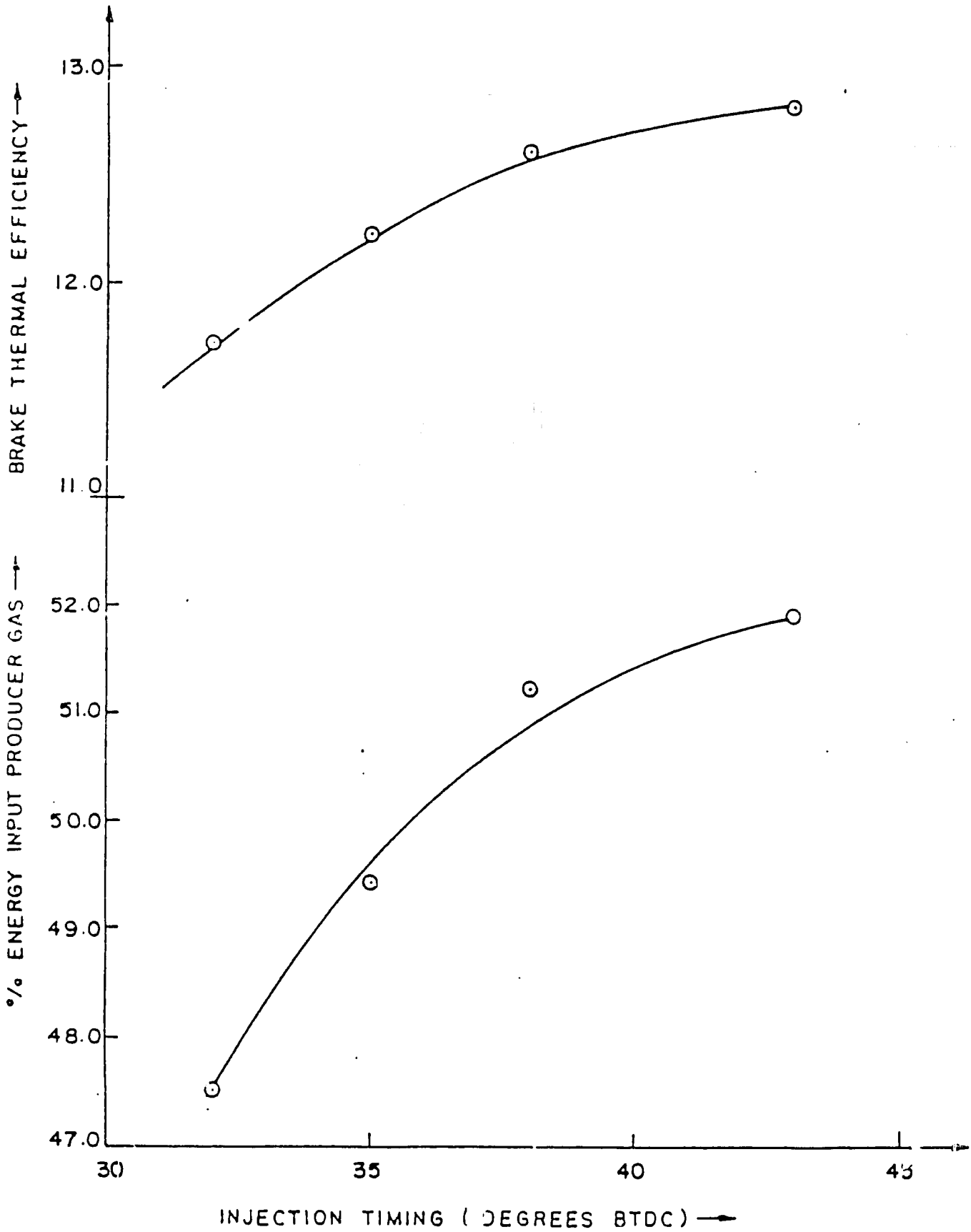

FIG. 13 VARIATION OF % ENERGY INPUT BY PRODUCER GAS & $\eta_{TH.}$ WITH INJECTION TIMING

RICARDO ENGINE; 1500 RPM DUAL FUEL

PRODUCER GAS FLOW RATE: 8.5 m^3/hr.

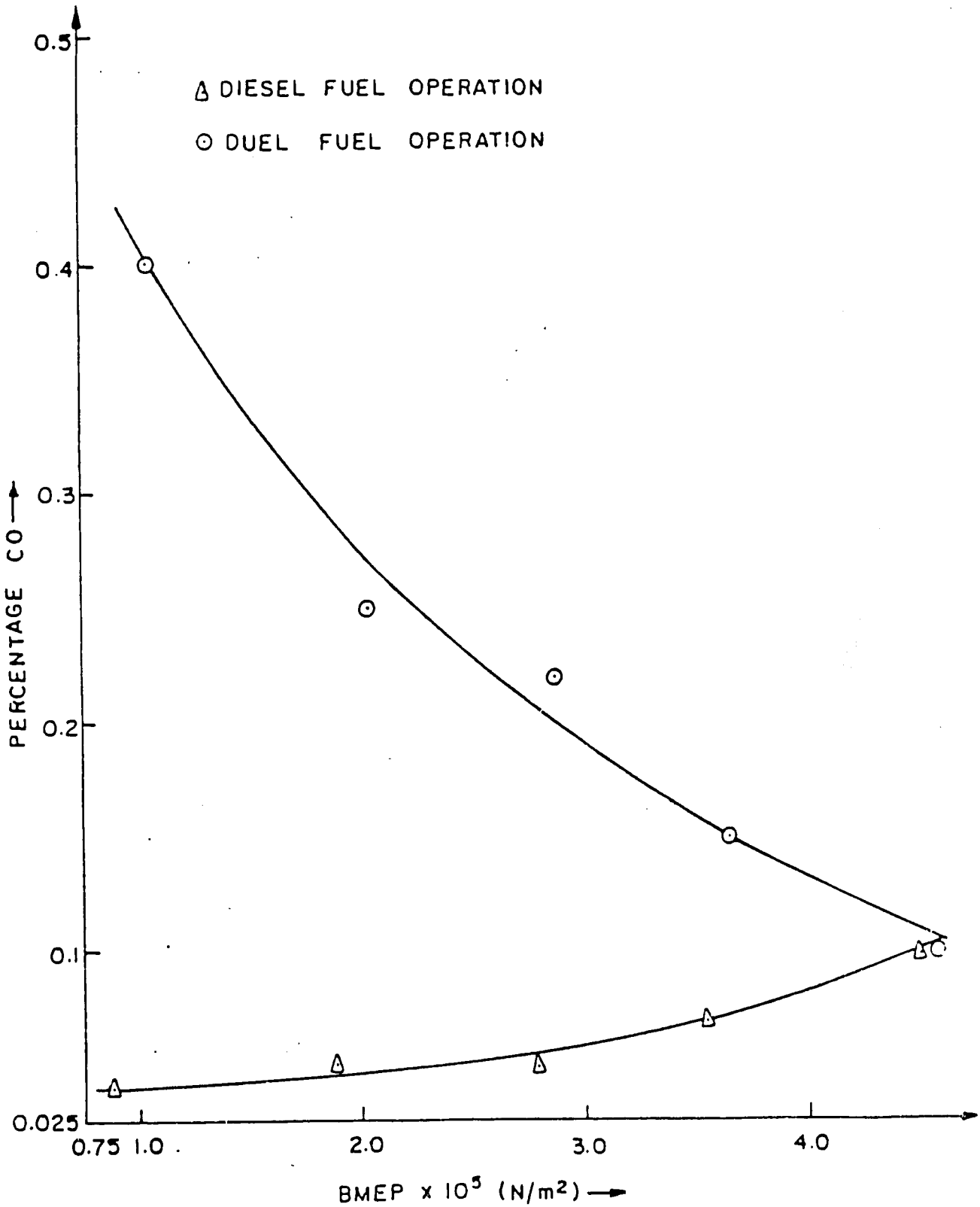

FIG. 14 VARIATION OF CARBON MONOXIDE WITH BMEP

PETTER ENGINE; 1500 RPM

PRODUCER GAS FLOW RATE: 8.5 m^3/hr.

1000 rpm and with four different maximum producer gas induction rates. These graphs show an identical trend of increased exhaust CO pollution with duel fuel operation. However this increase, which is mainly due to incomplete combustion of CO present in producer gas, is marked at light loads. It is nominal during engine operation at around rated load. If the engine is started and operated at light load on diesel neat and producer gas substitution is effected to meet higher loads, this problem of increased CO in engine exhaust can be minimised.

5. CONCLUSIONS:

From the phase of the project work completed so far and reported in this paper the following broad conclusions can be drawn.

(1) Small size gasifier along with the gas cooling and cleaning system design used in this work is a viable unit which is capable of providing a consistant quality and desired quantity of producer gas to operate a 3 to 5 horsepower diesel engines widely used to operate irrigation pump sets and portable generating sets.

(2) An intake system retrofit consisting of a venturi and gas valves standardised in this work can be used for conversion from diesel to duel fuel operation of the engine with producer gas as the main fuel. Both speed

and load dependent control of the gas are achievable with this system and its use can permit upto 90 percent producer gas substitution.

(3) Although it is possible to restrict the quantity of diesel oil injection to 10-20 percent of its full load value such an arrangement results in a drastic reduction of engine output and thermal efficiency. A more appropriate arrangement is to run the engine on diesel oil neat upto 20-25 of rated load and to switch over to mixed fuel system at higher loads. The amount of diesel oil should not be reduced below 30-40 percent of its full load value, if drastic reductions in power out put and efficiency are to be avoided.

(4) Advancing the injection timing restores part of the power loss caused due to producer gas substitution. Optimum injection timing has to be experimentally determined for a given type of engine. While advancing the injection timing improves both engine out put and efficiency as also the extent of producer gas substitution, excessive advancing can result in engine knock and hence loss of power.

(5) It is easier to convert a direct injection engine to duel fuel operation. Indirect injection engines which usually have higher compression ratios are not as easily susceptible to such a conversion and give more troubles with producer gas substitution.

(6) Producer gas substitution in existing diesel engines increases exhaust carbonmonoxide pollution. This is more pronounced at part load engine operation and the increase is not much at higher loads.

(7) Small size gasifier-C.I. engine systems are feasible, have a vast potential in the agriculture energy sector, and they can go a long way to provide decentralised power for farm irrigation, portable power for rural electrification, and operation of farm equipment and machinery. However their use needs appropriate precautions and safety measures particularly against carbonmonoxide pollution as CO is the major combustible constituent of the fuel.

QUESTIONS & ANSWERS

BIOMASS SESSION, SECOND DAY

C: O. P. Vimal: Thank you, Dr. Mathur. I think you will agree with me that in the biomass conversion programs the engine is going to play a very major role and hence mechanical engineers will play a prominent role in accelerating and promoting this program. Dr. Mathur has presented some studies on the engine performance and emission characteristics but these studies have been carried out with charcoal. Our main objective is to study the use of different kinds of biomass and agricultural products of different physical and chemical characteristics and see how the engine behaves under these conditions and how the emission characteristics are affected. This is a vital area and we have to go a long way to establish these parameters.

Q: What governed the location of the cyclone after the cooler?

A: H. B. Mathur: If we have a cyclone in which we have a

filter element, it is better that it is not exposed to the hot gases coming from the gasifier, but only after they have been cooled. We have ensured that the gases entering the engine are at no stage higher than 50 deg.C.

Q: What was the type of cooler used?

A: H. B. Mathur: We have used a wet cooler. I have sprinkled water through the system and in the process monitored the temperature and seen that this temperature does not exceed 50 degrees when it enters the engine, otherwise the volumetric efficiency is adversely affected. We could as well have put a cleaner on the other side. You will agree that large-scale gasifier units are commercially available but, when you come to the small size, the problems of cleaning and cooling are very much magnified because you have a limitation on the size of the cleaner you can use. Therefore, we have used a cyclone cleaner and put it from the point of view of durability beyond the cooler.

Q: What has been the total pressure drop across the whole system?

A: H. B. Mathur: The pumping losses for the engine increase tremendously when you have the suction end of the engine used to pump the air-fuel mixture through the gasifier cooler and cleaner. The dual fuel engine tends to approach the auto cycle. Since I am injecting the homogeneous mixture when injection commences, I must achieve the efficiency obtained by the auto cycle; however, it does not because the overall efficiency consists of the thermal, mechanical and volumetric efficiency. The thermal efficiency should improve but the mechanical efficiency falls rapidly because of the pumping losses, and these losses -- while we have not measured the pressure drop -- we have found that the negative loop increases, by measurements made on an oscilloscope. Your gasifier design has a tremendous effect on the loss of power achieved. Quite often when you have a gasifier the pressure drop is so much that the suction cannot give you the gas and perhaps you have to go in for a blower.

Q: What has been your final conclusion -- which engine is better, DI or IDI?

A: H. B. Mathur: It is DI -- there are no two opinions about it. The IDI engine has a higher compression ratio and it is very difficult to have sustained

performance. Modifications are more complicated. There are more cold starting problems, but the DI is cheaper. It is easier and most of the engines we are using for farm irrigation in the 5 HP range are DI engines. Maybe Dr. Parikh can correct me if I am wrong.

C: Half of them used are DI engines. I am tempted to believe, however, the other way around because high level of turbulence will definitely help in combusting.

A: H. B. Mathur: However, the problem is the high compression ratio and the cold starting problem. The engine starts knocking.
The combustibles are CO and H_2. H_2 should be very low since hydrogen has a low octane rating as opposed to 105 of CO it is hardly 60. My earlier work was mainly on SI engines and this work we are conducting on a CI engine. We find that one of the most important things we have to look into when designing a gasifier is that the hydrogen content to be used for an SI engine should be low and for a CI engine should be high. If you have a high hydrogen content, you have a faster flame velocity but you have a mixture of air and gas taken in and if you have a larger proportion of hydrogen then there is a chance of

knocking. With the indirect injection system and the experience of the Ricardo engine we had more problems than with the direct ignition engine.

C: My particular reference is to agricultural engines only, that is, the Lester and Peter engines. Their compression ratios are quite similar --17.5 and 16.

Q: Have you investigated why the engine performance comes down as you increase the producer gas content?

A: H. B. Mathur: This is because, one, the gas-air mixture is a low density mixture. For example, I get 3.3 megajoules per cubic meter with diesel-air mixture as compared to 2.5 with producer gas-air mixture. When I increase the producer gas content, I am inherently making it low quality because of the low energy density. The second reason is that there is a mechanical loss because the engine has to do the work of suction also. These two things are responsible for the loss of power.

Q: Why did you change from the SI engine to the combustion engine?

A: H. B. Mathur: I agree with you -- in case of the SI

you don't need any retrofits and you can change to producer gas operation readily. We shifted because we were told we have 2.5 million diesel pump sets in the country. We are not using the small size SI engines in commercial applications and therefore whatever we do will not be of immediate relevance for such purposes.

DEVELOPMENT OF WOOD-BASED GASIFIER ENGINE SYSTEMS

M. B. Durgaprasad
R. N. Pandya
Jyoti Solar Energy Institute
Vallabh Vidyanagar
Gujarat, India

DEVELOPMENT OF WOOD-BASED GASIFIER ENGINE SYSTEMS

BY

M.B. DURGAPRASAD*

R.N. PANDYA*

PAPER PRESENTED AT THE

SECOND USAID/GOI WORKSHOP ON
ALTERNATIVE ENERGY RESOURCES
AND
DEVELOPMENT
COAL CONVERSION
AND
BIOMASS CONVERSION

MAURYA PALACE - SHERATON
NEW DELHI, INDIA

FEBRUARY 4-7, 1985

---

* Jyoti Solar Energy Institute
Vallabh Vidyanagar
Gujarat - 388 120

DEVELOPMENT OF WOOD-BASED GASIFIER ENGINE SYSTEM

M.B. DURGAPRASAD AND R.N. PANDYA
Jyoti Solar Energy Institute
Vallabh Vidyanagar
Gujarat - 388120

1.0 Introduction :

As the world's primary energy sources are getting depleted, one is concerned about substitute/alternative fuels. At the current rate of consumption, world's oil and gas reserves are expected to last for not more than 35 to 50 years whereas coal is expected to last for more than 250 years[1]. So one can expect the future fuels either liquid or gases to be derived from coal. There are various processes available for converting coal to either gaseous (Substitute Natural Gas - SNG) or liquid fuels. But all these schemes require high technology and involve billions of rupees whereas small scale gasifiers in the kilowatt range involve relatively low technology and extremely cheap to make in the order of thousands of rupees.

For an agriculture-based country like India, development of reliable small scale gasifier systems to run diesel engine pumpsets will help farmers to irrigate their land at a considerably low cost. Besides it will help reduce diesel fuel consumption as approximately 3.6 million diesel engine pumpsets are being used in India at present[2]. So the current project under Indo/USAID programme, to develop reliable wood based gasifier systems to fuel C.I. engines is expected to help India to alleviate her dependence on

imported oil. The project was initiated at JSEI only in the last week of March, 1984 after getting DNES approval. So the work schedule has to be revised as rightly mentioned in the semiannual report. However, work on wood gasification was started much earlier at JSEI. So some of the developmental and experimental work done during that period are also included in the report.

2.0 Overall objective :

To develop reliable wood-based gasifier and gas cleanup system suitable to fuel C.I. engines at 5 to 30 hp, and conduct field trials for demonstrating their application in the rural areas.

3.0 Current status of the project :

The project has been broadly divided into three phases, viz.

Phase I : Fabrication and Testing of Field Trial Unit

Phase II : Field Implementation and Personnel Training

Phase III : Continued Testing, Training and Documentation.

A moderate number of project tasks under Phase I have been completed and they are discussed in the report.

3.1 Fabrication, Assembly and Testing of Field Trial Unit :

A wood-based gasifier system to run an engine pumpset of 5 hp capacity has been designed, fabricated and subjected to rigorous testing for more than 300 hours.

The system comprises of a gasifier, a gas cleanup unit and an engine pumpset. Fig. 1 shows the schematic arrangement

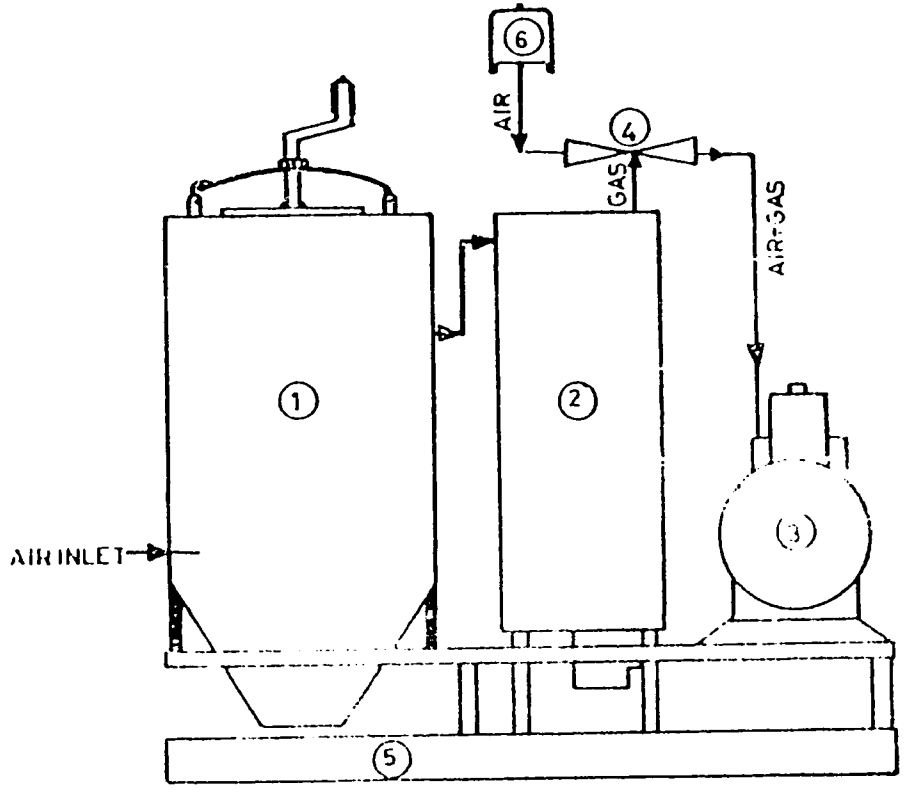

1 GASIFIER
2 GAS CLEANUP
3 ENGINE
4 VENTURI
5 FRAME
6 AIR FILTER

FIG : 1 GASIFIER SYSTEM

J S E I
VALLABH VIDYANAGAR

of the system. The technical specifications of the complete system are given in Table 1.

The gasifier is of downdraft type with a cylindrical fuel hopper of 500 mm diameter and 600 mm height with a holding capacity of about 25 kg of wood. The combustion and reduction zones are conical in construction (See Fig.2). The hearth diameter is 50 mm and the temperature of the combustion zone ranges from about 1100 to 1300°C. The air enters the combustion zone by means of six nozzles of 10 mm diameter. Preheating of air is accomplished by having the air inlet at the top of the gasifier as shown in Fig. 2. Generally M.S. is used as the material of construction except for the combustion and reduction zones and the air nozzles where stainless steel (SS 310) is used. An ash pit is provided below the reduction zone. The bottom part of the gasifier is insulated with glass-wool to minimise the heat loss from the gasifier. The wood is loaded using the feed door provided at the top of the gasifier. The gas cleanup unit comprises of a water scrubber and a dry filter as shown in Fig. 3. Water scrubbing, besides, removing suspended particles and condensable vapours, cools the gas to prevent derating of the engine. Coke is used as the bed material and the water for scrubbing is supplied by the pumpset. Waste cotton is used for drying the gas.

A C.I. engine of 5 hp capacity coupled to a centrifugal pump with the specifications shown in Table 1 is used with the gasifier.

TABLE 1 : SYSTEM SPECIFICATIONS

GASIFIER (3.7 KW)

a)	Type	Downdraft
b)	Hearth diameter, mm	50
c)	Material of Construction	M.S., SS 310
d)	Number of air nozzles	6
e)	Flow rate, Nm^3/hr	12
f)	Hopper Capacity, kg	25
g)	Combustion zone temperature ^oC	1100-1300
h)	Outlet gas temperature ^oC	300-350

WATER SCRUBBER

a)	Type	Packed bed
b)	Material of Construction	M.S.
c)	Bed material	Coke
d)	Outlet gas temperature ^oC	Ambient

DRY FILTER

a)	Type	Packed bed
b)	Material of Construction	M.S.
c)	Filter medium	Cotton waste

ENGINE

a)	Make	Kirloskar TV-1
b)	Type	Single cylinder, 4 stroke Water cooled Diesel engine
c)	Rate power KW	3.7
d)	RPM	1500
e)	Diesel Consumption on full load, l/hr	1.1

PUMP

a)	Make	Kirloskar NM2H
b)	Type	Centrifugal
c)	Discharge l/s	17
d)	RPM	1500
e)	Total head, m	12

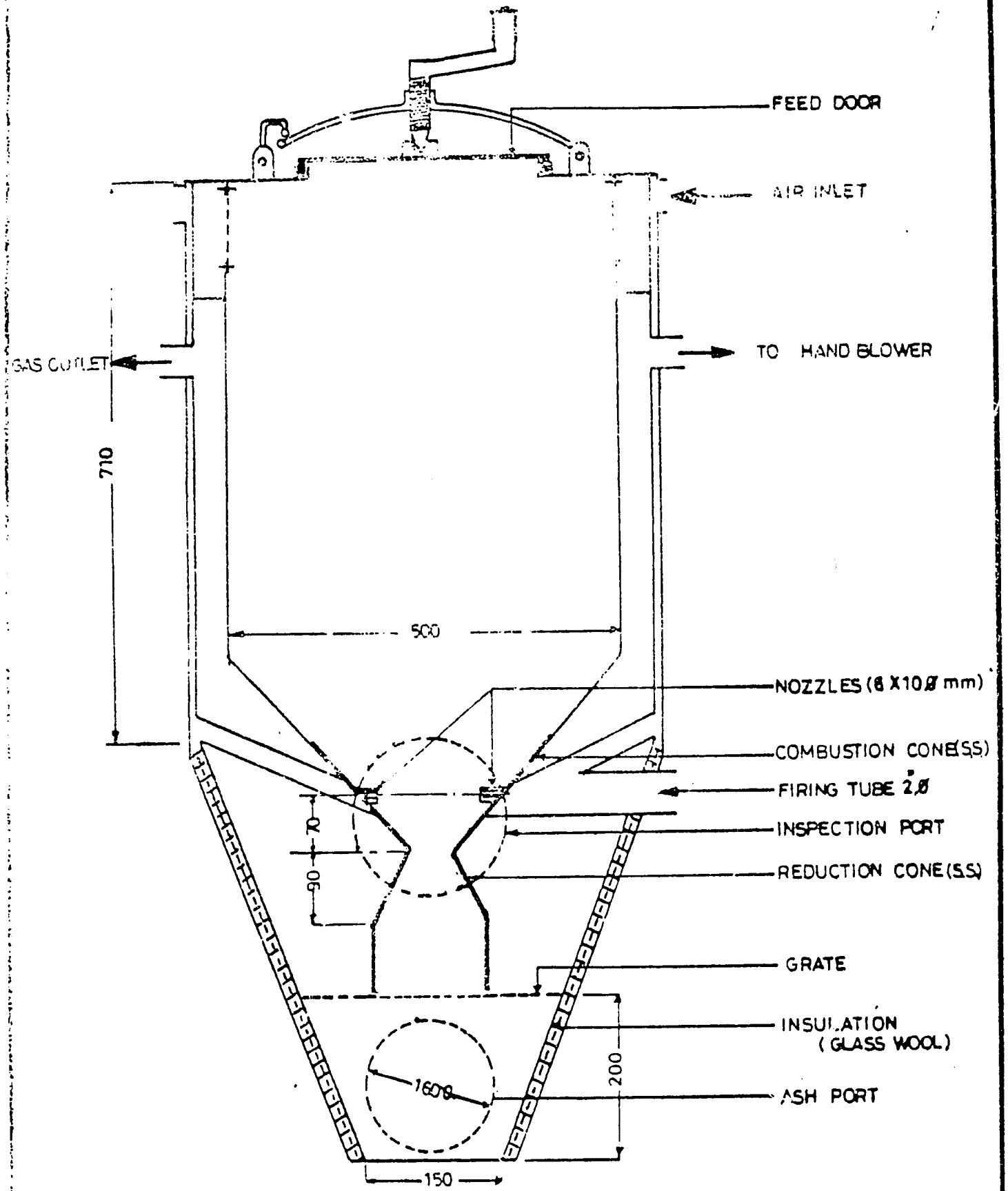

FIG : 2 GASIFIER MODEL II G 50

DIMENSIONS IN M.M.

JYOTI SOLAR ENERGY INSTITUTE
VALLABH VIDYANAGAR
388 -120

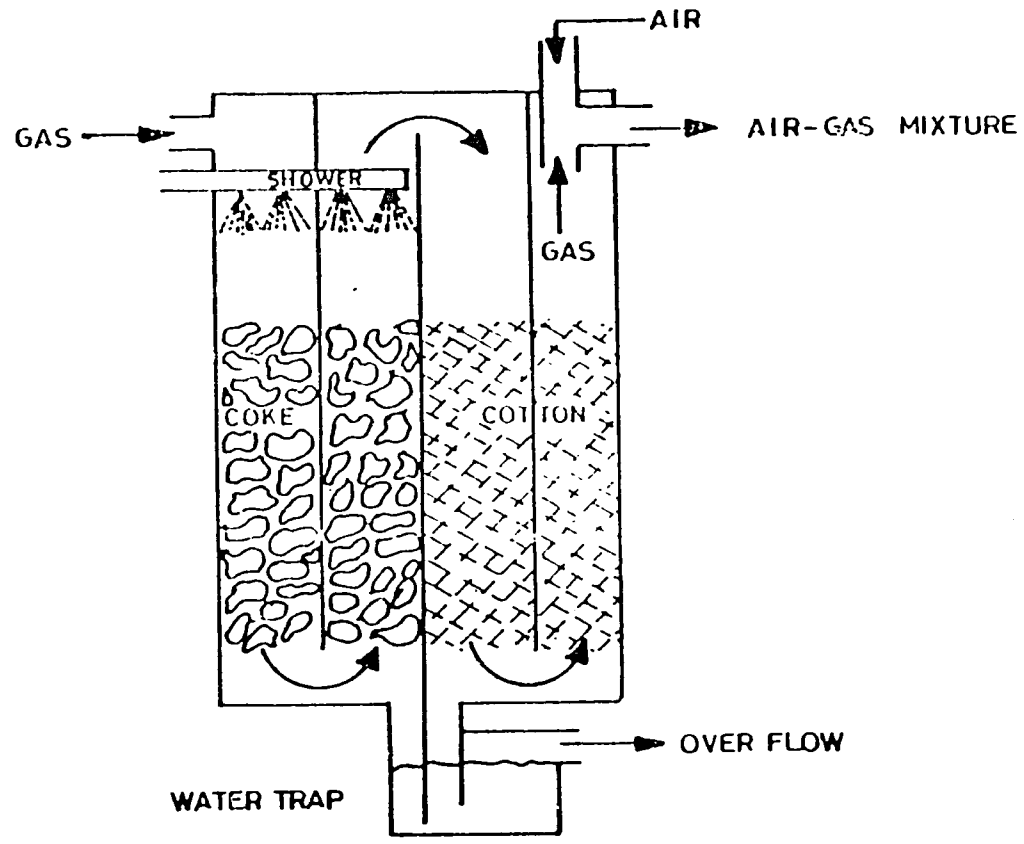

FIG:3 GAS CLEANUP UNIT

JSEI
VALLABH VIDYANAGAR

3.2 Selection of Field Testing/Demonstration Sites :

The following criteria are adopted in selecting a Field Testing/Demonstration Site :

- Availability of fuel (diesel and wood)
- Price of wood
- Storage space
- Activities of the user agency
- Potential for effective utilisation
- Availability of skilled mechanic
- Feed back of performance data
- Demonstration value
- Proximity to the Institute.

A few sites were visited and on the basis of the above criteria, a site has been selected and a 5 hp gasifier pumpset is to be installed by the end of February 1985.

3.3 Startup, Operating, Safety and Shut down Procedures :

3.3.1 The following procedure was developed for starting and operating the gasifier :

- Fill the gasifier upto 50 mm above the air nozzles with charcoal.
- Fill the remaining space with wood (size 50mm x 10mm x 15mm).
- Secure the system air-tight.
- Ignite the charcoal with a torch.
- Use hand blower for air circulation for 10 to 15 mts.
- Start the engine pumpset on full diesel.
- Bleed off water to the scrubber.

- Slowly admit air-gas mixture into the engine for partial replacement of diesel by adjusting the governor manually taking care to maintain specified rpm and smooth running of the engine without knocking.

3.3.2 The following safety procedure is developed :

- During startup period, ensure that the gas is dispersed at a higher level.
- Use CO monitor in the immediate vicinity of the gasifier system.
- Ensure that the gasifier is leakproof.
- Isolate the gasifier before shut down.

3.3.3 During shut down the following steps should be adopted :

- Cut off the air supply to the gasifier.
- Close the gas valve.
- Stop the engine.

3.4 Support R and D work :

Research and development is being carried out in the following areas with an aim to improve the efficiency of the system and to reduce its cost :

- Optimization of dimensions of combustion zone, reduction zone, hearth and location and number of air nozzles.
- Material of construction for combustion and reduction zones and nozzles.
- Improvement in gas filteration system.
- Inclusion of security/check filter in the system.

With the intention of optimising design parameters as mentioned above, another gasifier with 55 mm hearth diameter has been fabricated. An air inlet pipe, with 4 nozzles of 11 mm diameter, is located centrally in the gasifier with the provision for vertical movement so that the position of the air nozzles can be optimised (See Fig. 4). Locating the air inlet pipe centrally in the gasifier also facilitates easy maintenance.

As mild steel undergoes high temperature corrosion, stainless steel (SS 310) is used for combustion and reduction cones and nozzles.

Shaking arrangement is provided at the bottom of the gasifier to remove choking at the throat. This is a simple hand operated arrangement as shown in Fig. 4.

Besides, the fabrication of the gasifier has been made simple by avoiding preheating of air and making it in two parts. This is also facilitates easy maintenance.

In order to improve the filtering efficiency, a cyclone is included in the system. Further, coke which was used as bed material in the water scrubber of the earlier system, is replaced by smooth pebbles as they possess self-cleaning property. For a bed height of 300 mm, the pressure drop is about 5 mm of water.

The gas after being scrubbed with water is made to pass through 'perforated caps' provided on a plate at the top of

the scrubber. This facilitates further removal of particulates.

Coir was tried instead of cotton waste in the dry filter but was found to be not that effective. However, materials like jute, corn cobs, etc. are to be tried.

A 'Security filter', which is nothing but a fine filter consisting of densely packed cotton waste, is included in the system just before mixing the gas with air to ensure that the gas entering the engine is well filtered. Fig. 5 gives the schematic diagram of the modified system.

A simple T-connection was found to be effective for air-gas mixing. Hence, the venturi type mixture used in the earlier system is replaced by a T-connection. This besides, reducing the pressure drop, helps to reduce the cost of the system.

Performance tests are being conducted on the modified system.

3.5 Technical Personnel Training in the U.S. :

Mr. R.N. Pandya underwent technical training from July 9, 1984 to August 3, 1984 at the University of Missouri at Rolla and University of California at Davis, USA. A training report on his visit was prepared and copies submitted to the DNES and USAID.

Under Phase II of the programme for training the operator of the user agency, it is decided to conduct a week's training programme at the Institute before installation of

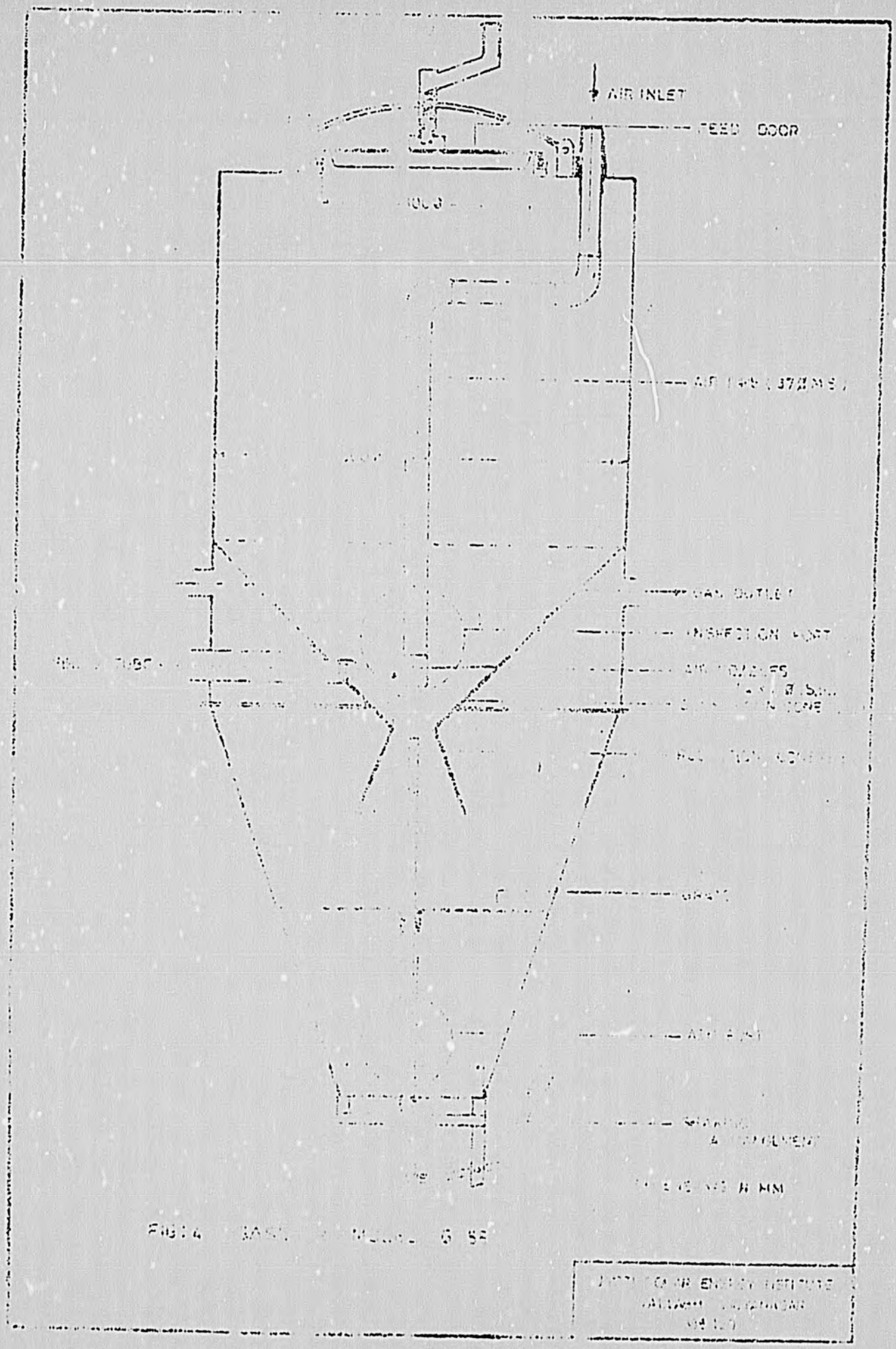
AIR INLET
FEED DOOR

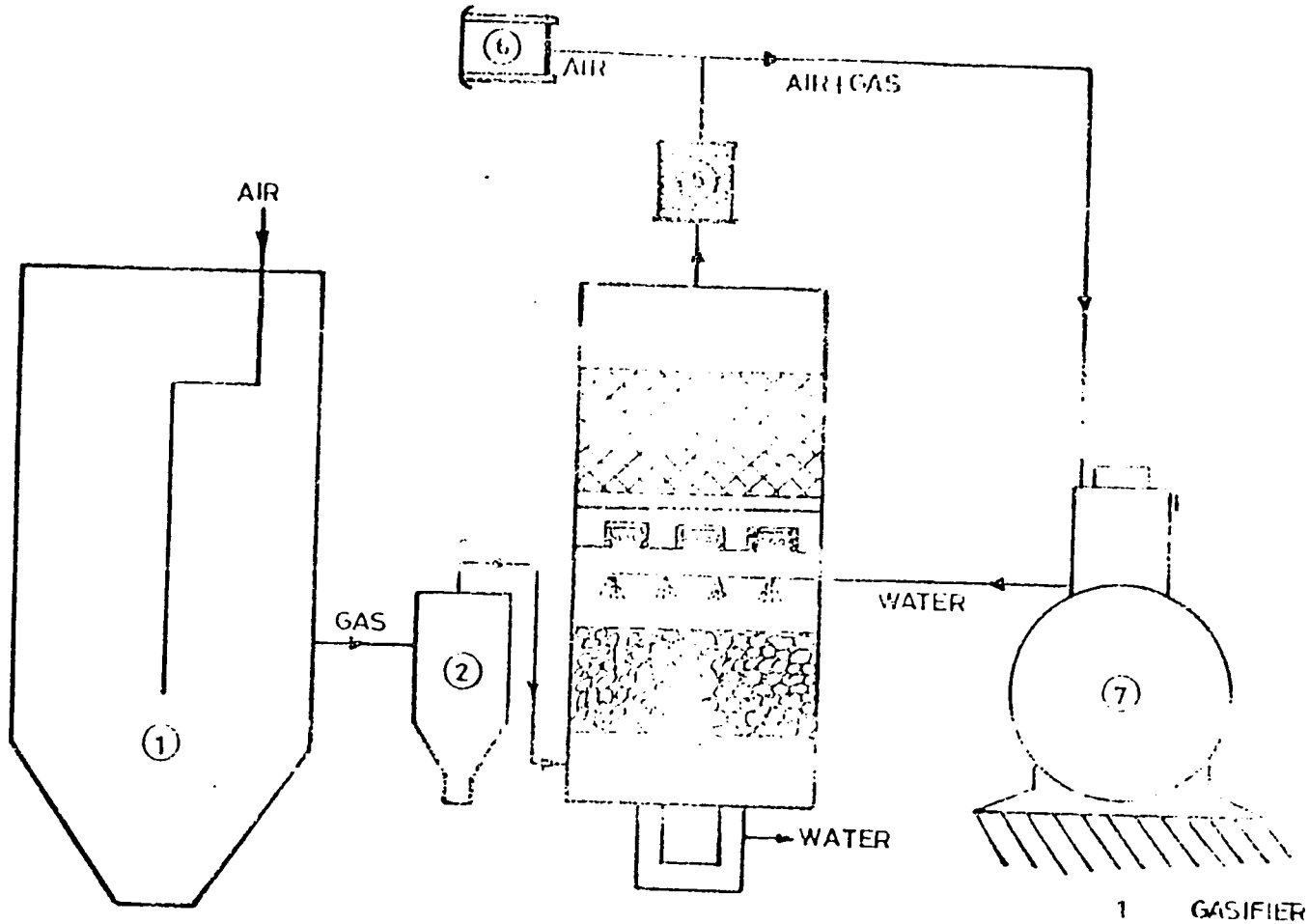

1 GASIFIER
2 CYCLONE
3 WATER SCRUBBER (PEBBLES)
4 DRY FILTER (COTTON WASTE)
5 SECURITY FILTER
6 AIR FILTER
7 ENGINE PUMPSET

FIG : 5 SCHEMATIC DIAGRAM OF MODIFIED SYSTEM.

J S E I
VALLABH VIDYANAGAR

QUESTIONS & ANSWERS

BIOMASS SESSION, SECOND DAY

C: O. P. Vimal: Thank you very much, Dr. Durgaprasad. We are open for discussion now.

Q: How do you regulate the gas flow rate with variations in engine speed and load?

A: M. B. Durgaprasad: We are running at a constant speed and we do not have the facility to measure the load.

RECENT OPERATING EXFERIENCE WITH 3 KW U.S. PROTOTYPE GASIFIER FOR USE IN INDIA

Virgil Flanigan, University of Missouri
John Goss, University of California - Davis
Abu Talib, MITRE Corporation
Daniel Bienstock, Pittsburgh Energy Technology Center

RECENT OPERATING EXPERIENCE WITH 3 KW U.S. PROTOTYPE GASIFIER FOR USE IN INDIA

Virgil Flanigan
John Goss
Abu Talib
Daniel Bienstock

USAID/GOI ALternated Energy Resources Development Project
Workshop II

New Delhi, India

INTRODUCTION:

Several years ago, a joint effort between the Government of India and the United States Agency for International Development, was undertaken to develop biomass energy research projects for India. The principle objective of these joint projects were to develop a small gasifier system fueled with biomass residues to pump water for field irrigation. These initial projects were selected as part of a large program to develop an intergrated program to provide alternative energy sources for the rural, village and urban commercial sectors of India.

The projects at IIT Delhi were designed to examine the use of charred agricultural residues in an appropriate gasifier along with the development of a retrofitted engine to be specifically used for the charred biomass pumping system. The project at Jyoti Solar Energy Institute[1] is to continue their work developing a pumping system using raw biomass,primarily wood blocks. When performance data are available from these projects a comparison between the developed technologies can be made which will be by GOI and USAID in planning for the extensive use of energy from small-scale biomass gasification plants.

As this approach developed the need for an operational gasifier system became apparent. Preliminary testing of this system will be presented in this paper.

The system selected was built by the Missouri Gasifier Corp.[2] of California, Missouri. Three of the S sized units were purchased and two shipped to India and the other tested at the GROW facility of the University of Missouri-Rolla, Rolla, Missouri.

DESIGN AND OPERATION OF THE S-SERIES GASIFIER SYSTEM

The S-Series Gasifier shown in Figures 1 and 2 is designed to fuel an engine providing stationary shaft power or drive

FIGURE 1 S-SERIES GASIFIER

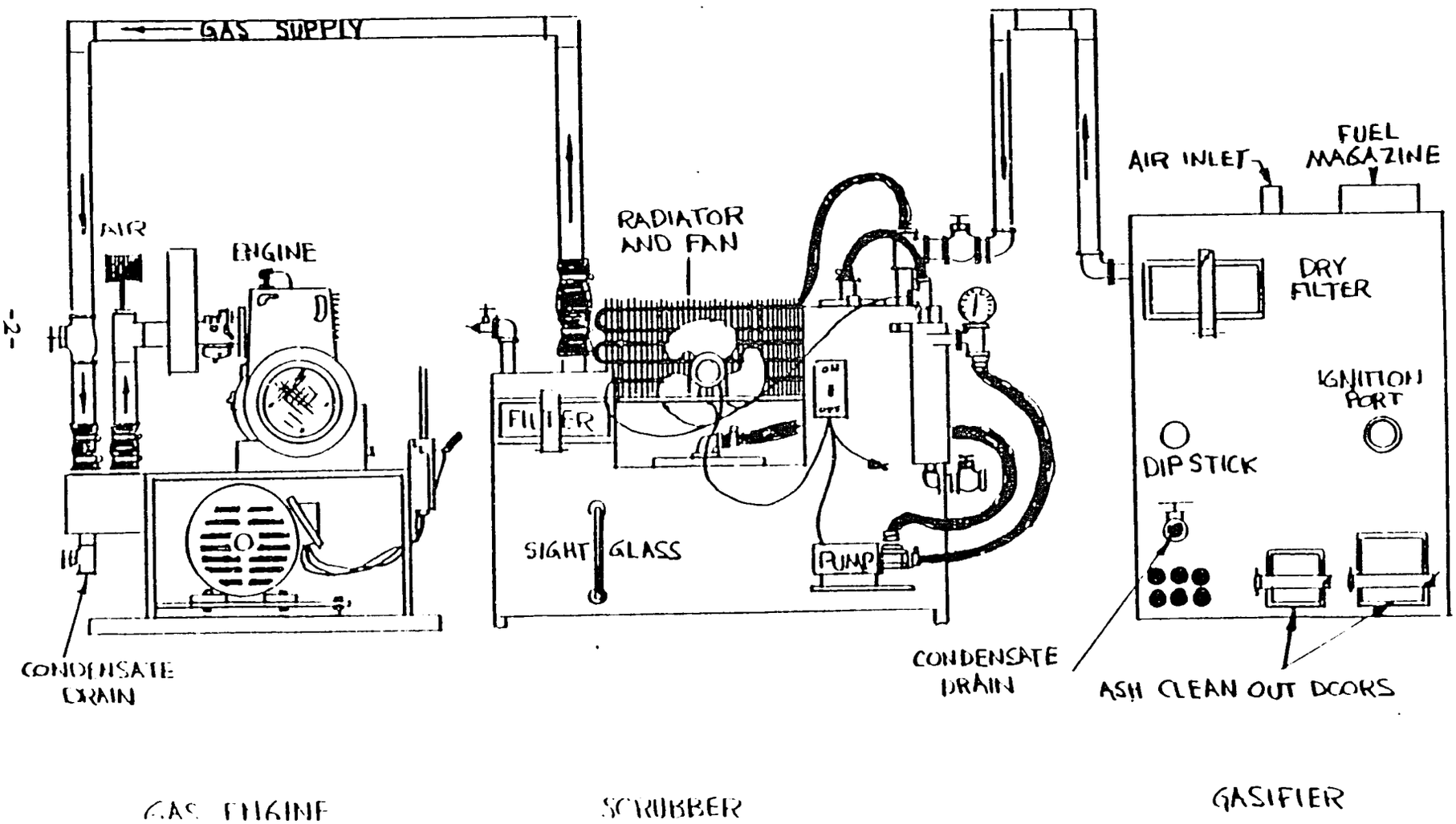

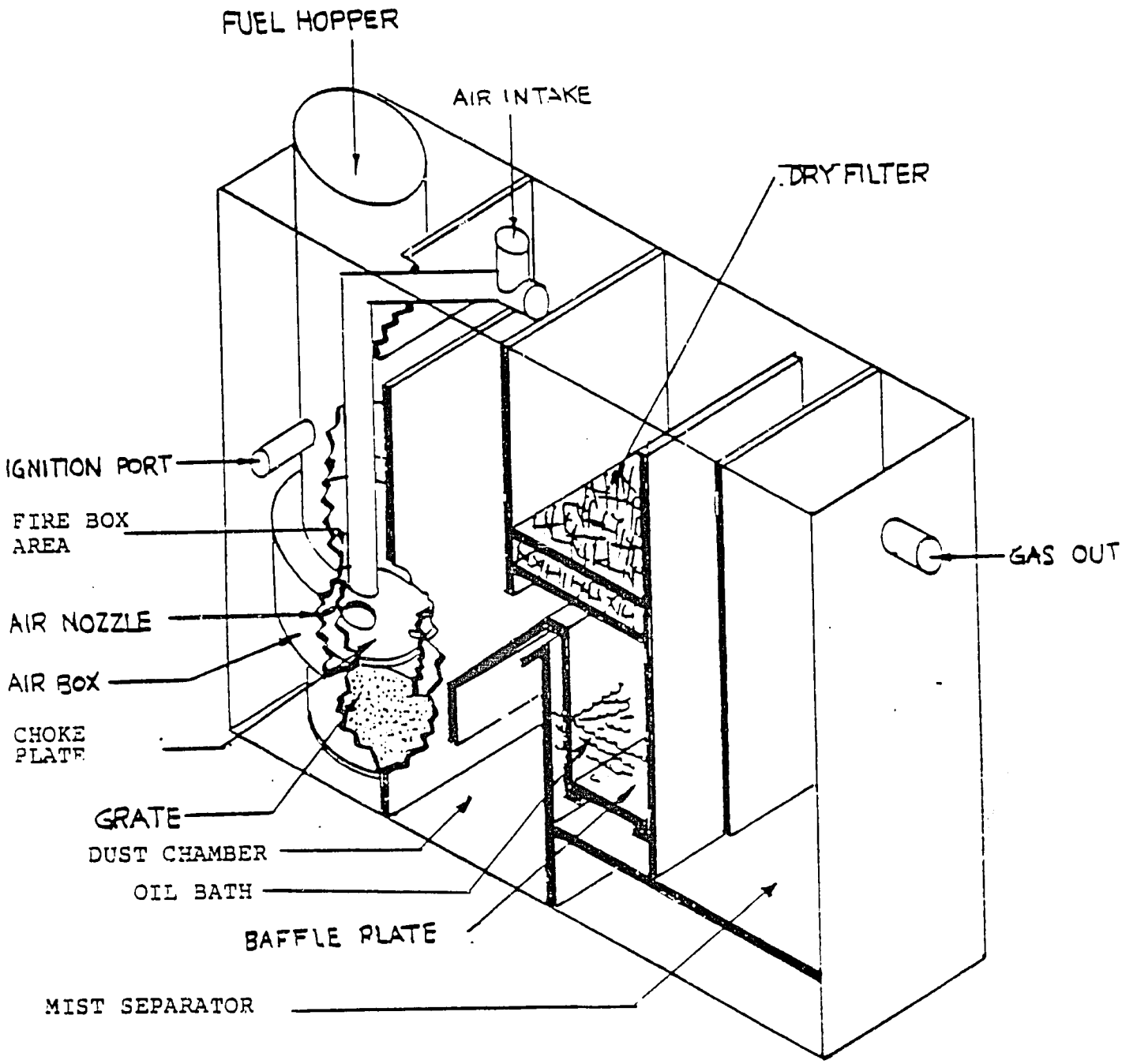

GASIFIER CROSS SECTION

FIGURE 2

electric generators. It will run continously, not requiring shut down for the addition of wood. The fuel can be added by hand or by utilizing an auger. Any fuel having a size distribution, bulk density and flow characteristics similiar to medium size saw-dust can be used as long as it has a low ash content(less than 2 to 3%) but preferably 1 percent or less) and the moisture content is less than 30 percent. This type of gasifier has very low maintenance since there are no moving parts and only two parts that can wear out. The system was designed to use one oil bath filter and one dry filter. The oil bath filter requires recycled peanut oil but can use most any high temperature oil, except motor oil. The dry filter uses cotton wood shavings. The gasifier produces the gas through a series of pyrolysis steps, using the oil bath filter.

The air,to sustain partial combustion in the gasifier reactor, is induced by the engine intake manifold vacuum. The ambient air is drawn into the air intake pipe which is connected to the air box. The air circulates in this plenum chamber to provide flow into the air nozzles, Figure 3A. The air and fuel mixture react as they pass through the fire box area and flow to the choke plate, converting the wood to gas, tar, and char. The gas passes through the grate circulates around the fuel hopper and air intake pipe and then enters at the top of the dust chamber. The gas exits at the top of the dust chamber then bubbles up through the oil and through the dry filter. Finally, the gas passes through the mist separator and out the gas outlet.

An additional scrubber system was used to further clean and cool the gas. The wet scrubber, shown in Figure 4, is a compartmentalized box containing a spray column, packed bed filter, water reservoir, and a plastic foam demister. The gas initially flows into a chamber which contains a spray nozzle to cool the gas and settle the larger entrained particles. As the gas leaves the chamber it flows through the packed bed filter make up of a top layer of 1/2 inch clay spheres. With the gas passing up through the spheres and gravel, cooled water is sprayed on the top of the bed, scrubbing

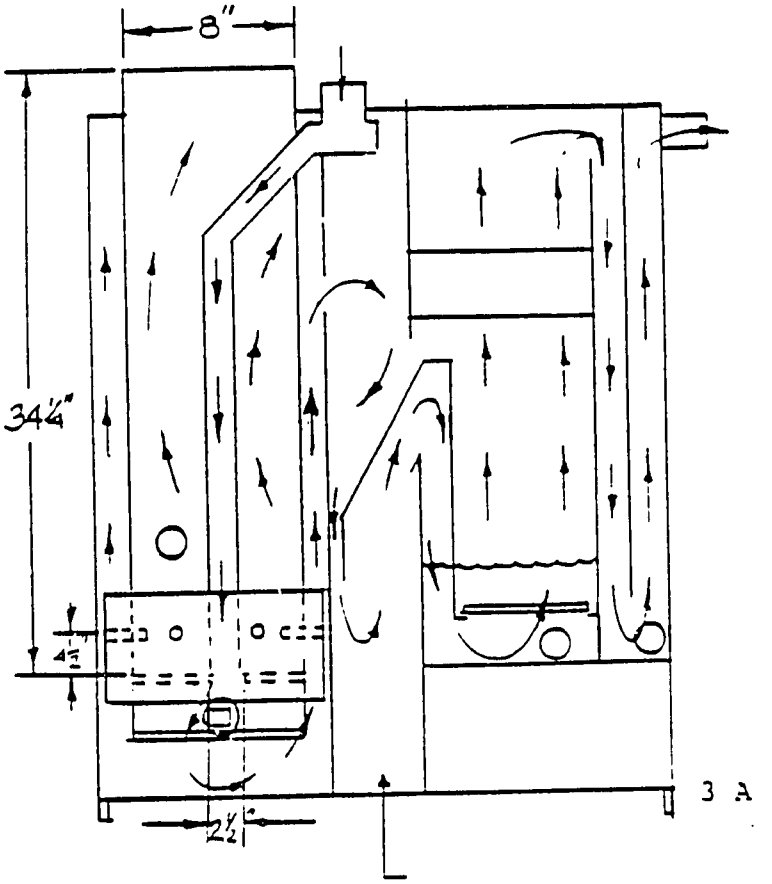

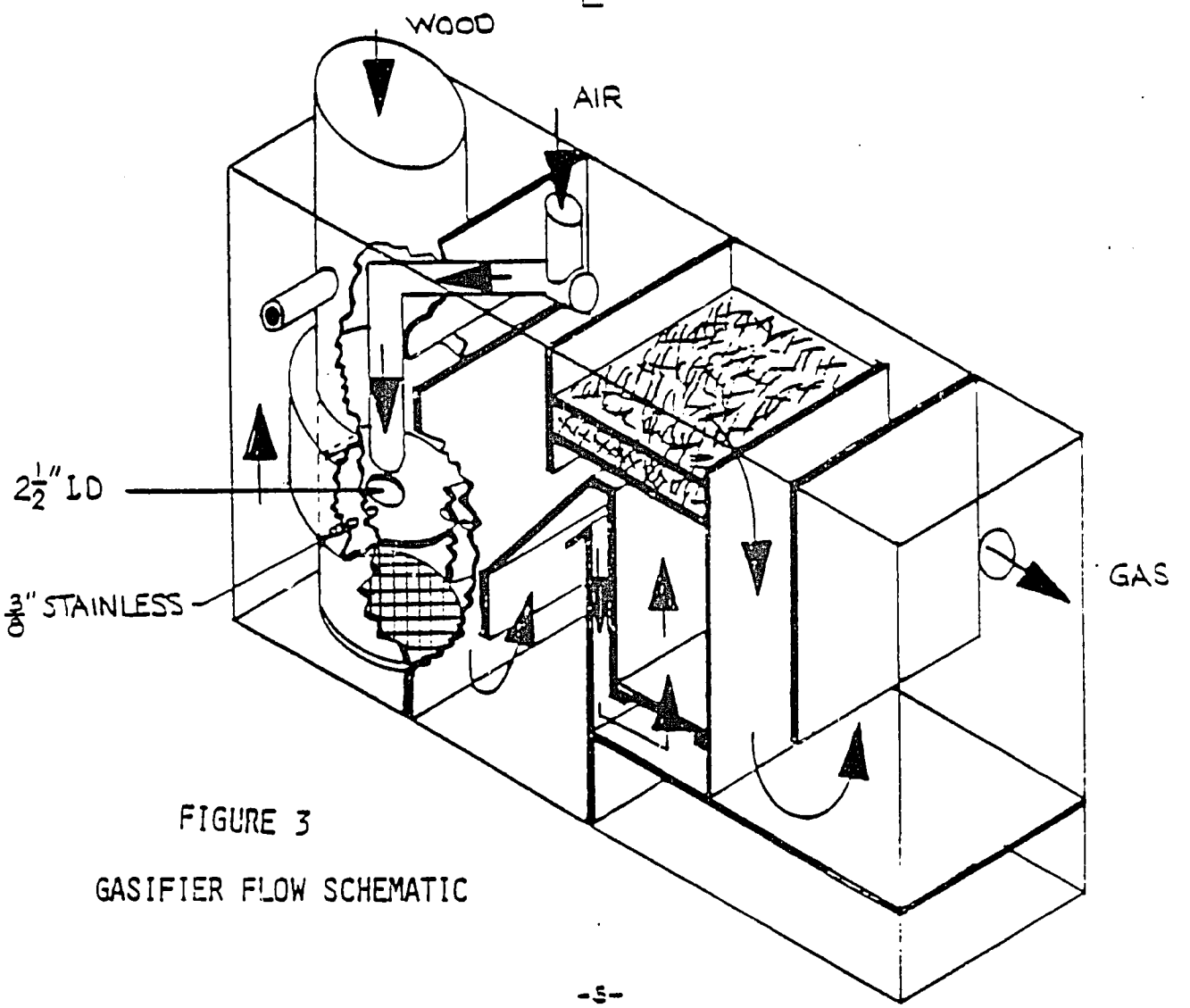

FIGURE 3

GASIFIER FLOW SCHEMATIC

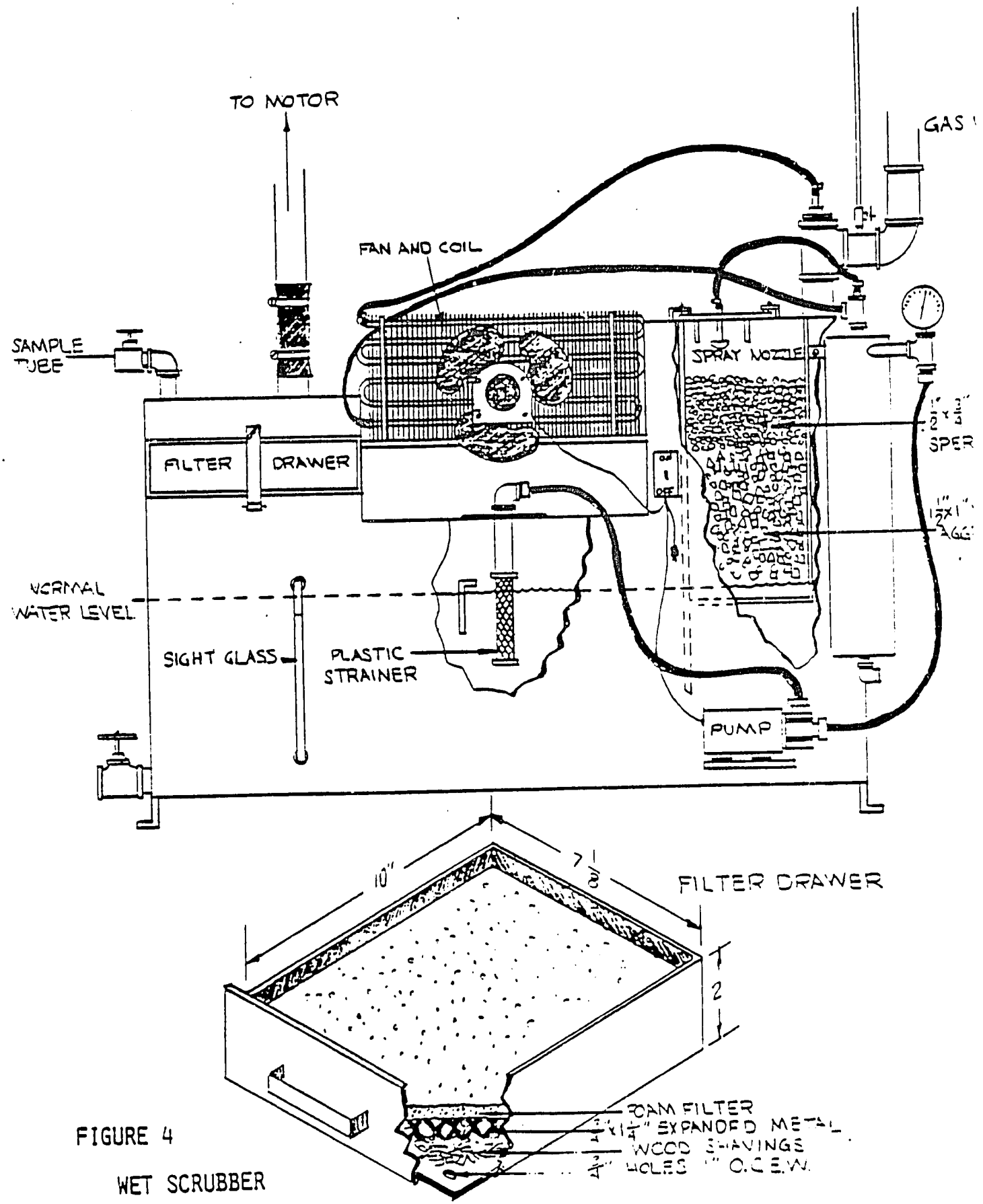

FIGURE 4

WET SCRUBBER

the dispersed gas of the condensed tar and remaining fine char particles. After the gas is clean, it flows from the packed bed filter through the gas passage, above water level, and into the demister.

The demister is simple a thick layer of foam approximately two inch thick. A small amount of diesel fuel is used to moisten the foam pad to improve the filtering action.

The scrubber solution is a water-soap mixture to aid in absorbing the tar into the solution. The soap component is one cup of the tri-sodium phosphate added to the reservoir before filling with water. An antifoaming agent is required and Mr. Reissler suggests that a small quantity of diesel be used. The diesel appears to diminish during use and both the GROW staff and Professor Goss's staff find that diesel needs to be added periodically.

A small pump is mounted on the unit to provide circulation of the scrubber solution. The pump is electric but in remote areas it could be driven by the engine. The pump provides a flow the scrubber solution through the cooling coil where the solution is cooled and passes on to the two spray nozzles in the scrubber chambers. The water entering the pump is filtered using a plastic strainer. The cooling is required to reject the sensible heat from the hot producer gas transferred to the water. The water is drained periodically and the bottom of the reservoir cleaned to remove settled tar and char.

The cooled clean gas is piped to a simple mixing chamber prior to entering the carburetor of the engine.

OPERATION RESULTS

The system has been operated for about 1000 hours. Several students have performed special projects on the system, operating the gasifier with sawdust, shavings, lump charcoal, and granular

charcoal. The system is started by driving the SI engine with the electric motor. The engine intake manifold vacuum induces the gasifier combustion air. The ignition port is opened and a small piece of paper inserted and ignited with a match. Normally, engine quality producer gas will be produced within 15 minuets from start-up. The engine air gas mixture is adjusted at the carburetor inlet to start engine operation. Once stable operation is achieved the electrical output is monitored and the weight of gasifier fuel recorded. A sample operating chart is shown in Figure 5. As the run progresses, a gas sample or samples are taken and analyzed by the Carle Chromatograph. Tar samples are taken by drawing the gas through a water bath and monitoring the tar absorbed. Typically, this procedure has indicated a clean gas but is not sensitive enough to determine the condensed tars. After several hours of steady state operation the run is terminated and the data collected and recorded.

The scrubber system pressure was monitored periodically varying from 1" water column to a high of 80 inches. The high value represented a scrubber with no flow passing the system. A simple delta P measurement permits determining the need for cleaning the scrubber. The circulating pump on the scrubber has been a source of difficulty. The original pumps were not designed for continuous duty and after several hours, the impeller would swell overloading the pump motor. A new pump is being selected but additional work needs to be directed to this area.

The only real operating problems were associated with the pumps and the build-up of tar and char in the scrubber system. A scrubber modification including a small pump would be helpful in terms of long term operation and clean-up. Periodically, during operation, diesel should be added to the demister foam and the scrubber water. The hot gas flowing through scrubber has a tendency to absorb the diesel.

Several attempts at operating with wood chips were tried. The initial run was erratic but the last attempt was more consistant

July 12, 1984

TIME	ELECTRICAL CURRENTS (amps)	GASIFIER AIR FLOW SCFH	
1:30			-- Start engine & light sawdust
1:35	8.5	120	
1:50	7.5	100	
1:55	8.5	140	
2:00	8.5	140	
2:05	9.0	140	
2:10	10.0	100	-- Add 14.1# (at marked level)
2:15	7.0	80	-- Add 8#
2:20	8.0	90	
2:25	7.5	130	
2:30	9.0	110	
2:35	9.5	90	-- Add 6.5#
2:40	5.0	80	
2:45	9.5	80	
2:50	8.5	90	
2:53	7.5	80	-- Gas sample taken
2:55	8.5	110	
3:00	8.5	80	-- Add 12.5#
3:05	9.0	120	
3:10	8.5	110	
3:15	8.0	100	
3:20	8.0	120	
3:25	8.5	120	
3:30	8.0	120	
3:35	8.0	120	
3:45	8.5	120	
3:50	7.5	120	
3:55	8.0	120	
4:00			
4:05	8.5	140	
4:10	8.5	130	-- Add 3.3# (at marked level)
			Shut down
Average	8.26	110.3	

Figure 5. Sample Operating Chart

and it is apparent that with careful testing a successful run could be made. Operating with chips and with chunk charcoal requires a cover over the top of the gasifier. Several of the runs were made measuring the air flow with and without a cover. The indications were that a considerable amount of air is passing through the bed instead of the tuyeres.

RESULTS

The results for several of the runs are listed in Tables 1,2, and 3. The first four runs were made with a 2 kw single phase motor being driven by a 12 horsepower engine. Later the electric motor was exchanged for a 3kw, 3 phase, 208 volt motor. This change is apparent in examining the data. The tests include sawdust, wood chips, and charcoal operation. Runs 5 through 8, were made with a partially blocked scrubber reducing the engine output. Motor output varied from 1.37 to 3.04 kw. The gas heating value varied from 63 Btu/scf up to 180 Btu/scf. The dry sawdust produced the highest value and the chunk charcoal the lowest but the efficiencies were higher for the charcoal. The charcoal was broken into dime size (3/8") pieces and the fines produced during the crushing were included as part of the fuel. In the cases where coarse material was used, a gasket and cover placed on the fuel opening improved performance. During run 11, the air flow difference between covering the top and leaving it opened was observed. The air flow through the tuyeres was reduced by two when the cover was removed. The cover used in the later runs was a simple rubber sheet approximately 1/8 inch thick. A cover with an air tight gasket will aid and improve the operation with these fuels. An inserted thermocouple monitored the gasification temperatures. During run 11, a stable gasification temperature of approximately 1800°F was measured and maintained. Monitoring the gasification temperature in the wood chips during run 13, indicated an erratic low temperature which caused heavy tar loading. At the end of run, the engine was totally coated with tar and had to be disassembled and cleaned, including changing the lubricant.

Run No.	Fuel Rate lb/hr	Air Rate SCFH	Energy Input Btu/hr	Carbon Rate lb/hr	Carbon in gas lb/lb mole	Gas Rate lb mole/hr	HHV Output of gas Btu/hr	Current Average amps
1	7.4		55400	3.4	3.15	.86	39520	9.8
2	6.7		70350	4.43	2.64	0.84	41010	9.0
3	4.4		46200	2.91	1.84	0.79	33750	8.8
4	4.9		51450	3.24	1.74	0.83	37390	9.3
5	3.23		37662	2.58	2.32			3.9
6	3.13		36496	2.50	2.25			3.8
7	3.28		38245	2.62	2.35			4.0
8	3.18		37079	2.54	2.28			3.9
9	4.43	144	51654	3.54	3.18			5.08
10	5.29	160	61681	4.22	3.8			5.47
11	16.09	180	123088	8.43	7.6			8.44
12	16.65	110.3	127372	8.72	7.85			8.26
13	WOODCHIP ERRATIC							
14	11.1		68820	4.7	4.23			6.5

TABLE 1: RESULTS OF SEVERAL RUNS

RUN NO.	Energy output Kw	Btu/hr	Engine %Efficiency	Gasifier %Efficiency	System Efficiency	HHV Btu/SCF	Fuel/Power lb/Kw hr	Note
1	2.16	7370	18.7	71.3	13.3		3.43	10% Moisture Sawdust
2	1.98	6760	16.5	58.3	9.6		3.38	Charcoal (Granular)
3	1.94	6620	19.6	73.1	14.3		2.26	Charcoal (Granular)
4	2.05	7000	18.7	72.7	13.6		2.82	Charcoal (Granular)
5	1.4	4778.2			12.7	136.5	2.3	Charcoal (Granular)
6	1.37	4675.8			12.8	128.1	2.28	Charcoal (Granular)
7	1.44	4914.7			12.9	125.6	2.27	Charcoal (Granular)
8	1.40	4778.2			12.9	115.2	2.27	Charcoal (Granular)
9	1.83	6238			12.09		2.42	Charcoal (Lump dime)
10	1.95	6671			10.81		2.71	Charcoal (Lump dime)
11	3.04	10388			8.26		5.28	10% Moisture Sawdust
12	2.98	10159			8.0		5.6	Wood Sawdust
13								
14	2.33	7951			11.5			Woodchips (Engine erratic at times)

Table 2: Results of Several Runs (Continued)

Run No.	H_2	CO_2	C_2H_4	C_2H_2	C_2H_6	O_2	N_2	CH_4	CO	C_3+	HHV Btu/SCF	C Fraction moles C/ moles Gas
	Fraction by Volume of Dry, Ambient Temperature Gas											
1	.1649	.1296	.0046	0	.0008	.0007	.5769	.0377	.0847	0	128	.2628
2	.1836	.1021	.0013	0	.0004	.0007	.5994	.0498	.0616	0	136	.2202
3	.1201	.0624	.0001	0	0	.0064	.7209	.0732	.0168	0	119	.1528
4	.1051	.0567	.0000	0	0	.0009	.7491	.0727	.0135	0	112	.1449
5	.0551	.0461	0	0	0	.0006	.7801	.1164	.0016	0	136.5	.164
6	.1143	.0432	0	0	0	.0008	.7481	.0879	.0057	0	128.1	.137
7	.1036	.0358	0	0	0	.0008	.7652	.0882	.0057	0	125.6	.129
8	.1062	.0379	0	0	0	.0007	.7714	.0777	.0061	0	115.2	.122
9	.0297	.0675	0	0	0	.0009	.8043	.0308	.0165	0	63.3	.114
10	.0781	.0476	0	0	0	.0008	.8166	.0396	.0175	0	71.2	.1047
11	.1600	.0944	0	0	.0130	0	.5040	.0524	.1103	.0067	180.7	.3032
12	.2380	.0687	0	0	.0120	0	.4570	.0851	.043	.0051	180.1	.235
13												
14	.1670	.1297	0	0	0	.0008	.4260	.0154	.1870	.0020	142.3	.338

TABLE 3. GAS ANALYSIS OF SEVERAL RUNS

The efficiency of the gasifier engine system varied from 8 to 14%. The higher efficiencies were produced from the charcoal operation. The gas content is shown in Table 3. Additional work needs to be done based on a carefully prepared experimental plan, providing for single parameter variations which permit accurate conclusions to be drawn from the variations in the gas constituents. The charcoal and wood analysis are given in Table 4.

SUMMARY

The system performs well and simple modification will further improve the gasifier performance. An improved scrubber pump will aid in system overall performance and a maintenance schedule will be easy to set-up and monitor.

RECOMMENDATIONS

1) Design a new top for the gasifier.
2) Design a dry clean-up system to be used with the charcoal fuels.
3) Investigate small changes in choke plate diameter as related to chunk fuels.
4) Prepare an operating matrix, using an experimental plan which permits varying a minimum of parameters between runs.

BIBLIOGRAPHY

1) "Development of Small Scale Gasifiers for Irregation Purpose Purpose in India". Technical Report, Joyti Solar Institute, 1982.
2) "Missouri Wood Gasifier". Missouri Department of Natural Resources, Division of Energy, Jefferson City, Mo. 1983

SAWDUST ANALYSIS (DRY BASIS)

C	=	0.5102
H	=	0.0487
O	=	0.3995
Ash	=	0.0396

Heating Value = 8319 Btu/lb

CHARCOAL ANALYSIS

C	=	0.6616
Volatile	=	0.2136
Ash	=	0.0874
Moisture	=	0.0374
Heating Value	=	11,660

TABLE 4. SAWDUST AND CHARCOAL ANALYSIS

QUESTIONS & ANSWERS

BIOMASS SECTION, SECOND DAY

C: O. P. Vimal: Thank you very much, Dr. Flanigan. We are open for discussion.

Q: R. C. Maheshwari: What is the carbon monoxide concentration -- it appears to be low.

A: V. Flanigan: These are the results from the gas chromatograph and I am surprised in some cases how low the carbon monoxide is. I would assume we are shifting it, but the question is, where the water come from because we do not of course add any water.

Q: This is a problem with agricultural residues; the temperatures are going to be low, less than 1000 deg.C. And therefore the CO_2 does not get reduced to CO. This way you probably tend to get more CO_2 than CO, and could this maybe cause a decrease in CO content?

A: V. Flanigan: That is a point. In one of the runs when the Indian fellows were there we did measure the gasification temperature, and you are right -- the temperature was 1800 deg.F.

Dr. Vimal made the point about rice hulls but we do not use rice hulls in this system. We have another fluid bed system that is quite successful using rice hulls.

PANEL DISCUSSION

COAL AND BIOMASS - SECOND DAY

C. D. Bienstock: This will be a panel discussion by representatives of the leading organizations involved in the biomass and coal conversion programs. It is rather open-ended, this panel discussion, and we would like to invite inquiries from the audience. But, before we do so, I would like to introduce the members of the panel. At my immediate left, Mr. Vaidyeswaran from RRL, Hyderabad; Professor Mazumdar from CFRI, Dhanbad; Mr. Faruqi from DNES, Joint Secretary; Mr. Sridhar from Corporate Office of BHEL; Diana Swain from the USAID Mission; and Bob Ichord from AID Washington.

So if there are any questions that have been bothering you, any problems that you have, now that you have these people here they are forced to answer your questions. So let's get started here.

Any problems, any thoughts about the future, the direction we are going, any advice you want to give us?

Well, maybe we will start the ball rolling by asking the panelists. Bob, can you give us a few words as to how you see this program as going?

C: R. Ichord: I would just like to emphasize a couple of things. One is that the energy has consistently, since I have been in Washington, been an important activity under the Science and Technology Sub-Commission between India and the United States. Some of the discussions in areas of mutual interest identified through those meetings have been very important in guiding AID in its efforts to support technology cooperation; in fact, several years ago the areas of biomass conversion, production, conservation, coal conversion were also topics that were identified at that level and subsequently we were able to move towards developing cooperative activities. I just want to point out that there is another meeting scheduled in April of this year of the Science & Technology Sub-Commission and again it is an opportunity to try to as scientists indicate some of the areas that are important where U.S. and Indian collaboration can be strengthened over the coming years. I think we are certainly looking forward to participating in that meeting and trying to see where we go in these areas of coal and biomass as well as others. I think the meeting has been very

useful in bringing me up to date in terms of the progress that has been made, and certainly significant progress has been made in the various activities under the project. I would say that my comment would be that there is a need I think to move beyond the purely technical design work and think about strategies for the implementation and putting into practice down the road of some of the technologies, or at least evaluating their commercial application. I think it is important to have that broader context and look at the policy framework and resources that are available to support programs, the likely markets for some of the technologies and the economics of the systems as they may develop through commercialization activities. Particularly important, I think, on the biomass side because there, as was pointed out by Virgil Flanigan, Dr. Vimal and others, what I call the bio-resource system is a very complex system and one that is under a great deal of pressure in India and other countries. Some of the technologies we are dealing with are ones that have been used in the past and are not really new technologies. In the Philippines where we are involved in a program of gasification, for example, over 200 gasifiers have been put out in irrigation cooperatives and what has happened is that, while the technical problems have in general been minimal, relating

primarily to cooling and cleaning systems, the problems were that the price of petroleum products and LPG created a demand in the industrial facilities for charcoal. This sort of fourfold increase in the price of charcoal as a result of this industrial demand had an impact with regard to the farmers' perception of the desirability of the gasifiers, in terms of the feedstock they were having to buy in the market to fuel the gasifiers. So a large number of the gasifiers are not in operation. Even though you have a system that is generally technically pretty good, and an organizational structure -- the irrigational cooperatives --that provide a vehicle for the management of the system and an organization that has been involved in helping to finance the system. I think it is very important to understand the whole bio-resource system in which we are thinking of using gasifiers, so that we do not make that kind of mistake with regard to the practical applications of the technology and in the process create a bad name for the technology. The other thing that is also important is that in looking at the issue of bio-energy and rural energy systems increasingly important is the integration of agriculture, forestry, energy areas and I think we had a good interaction here but there are other groups that have an important input to make in

terms of the issues we are dealing with. A final word -- I want to take this opportunity on behalf of AID Washington to express my appreciation for the hospitality provided here and I lock forward to next year's session where we will have further progress I am sure on these projects.

C: Mr. Bienstock: Could you identify yourself, please?

Q: S. K. Jain I have a few issues in mind which are very typical of Rajasthan. They may not be for all of India. We have talked about biomass conversions. We don't have biomass -- we don't have the conditions for creating biomass so easily as in other parts of India. If a plant is made to grow, there are people who would cut it without authorization for burning, or there will be cattle or sheep or goats which will eat it. We have very specific problems. There is something which has been in my mind which I would like to bring out here. One issue is for meeting the concentrated urban needs. We have a lot of friends here from BHEL and other big organizations. They are trying to meet those requirements. But 80% of India's population is rural. While we have rural electrification, how effective it is I think most of us understand. The less we talk about it the better. We

have to find alternatives to meet their needs. Plus, another perhaps 10% of the urban population is also poor, living in what we may call shantytowns around the larger towns. Their needs are also not met and there is a big gap here which we have to meet. For Rajasthan, I have been thinking as an engineer about the possibilities of using low-grade coal. Lignite is available in Rajasthan in plenty quantities. The government is not at the present moment thinking of doing any development of those small lignite deposits to meet the immediate needs of the poor people. There is no fuelwood. They are using what we call "gobar," the excreta from the animals. There are a lot of animals. But that is depleting the source for fertilizer to be used successfully somewhere else. True, there is a possibility of gobar gas but can we find ways and means? The experts on coal here did not discuss the use of lignite on a small scale. We can put up a 300 MW plant for burning lignite, but I am thinking of -- can the poor man dig out the lignite and burn it? Well, it becomes amorphous if it is kept for two weeks so can we find out how we can convert it into small briquettes or coat it with something locally available like poor-quality bentonite as a binder material. I am not sure if the possibility exists -- I am talking of things that are too small and it is

possibly not considered important enough.

The next issue is where we have some vegetation growing. There are parts of Rajasthan where that is possible. We can use another issue which we could possibly take up here -- biogas which I think is also biomass. Possibly that is a very vast subject and that is why we have overlooked it. But the agricultural waste could be used along with the human and animal excreta to generate biogas. There is a good potential for that. The problems we have been discussing about running an engine -- I am an automotive engineer myself -- to run an internal combustion engine on producer gas creates too many hazards but, with biogas, the hazards are very much less. I am not sure -- Kirloskar's has been advertising a great deal about their engines which are run on biogas being as efficient if not more so as running them on diesel oil. What institutions have been doing research work on that? Details are not available because commercial houses are not interested in giving full details. The second alternative which comes to mind is that I know, as an engineer, it is very difficult to have a turbine running at good efficiency to feed a village requirement. Can we have 15, 20, 25 KW turbines which may be run on closed circuit? You see we have a lot of difficulties about the gas having tar

and other inclusions but is it feasible to work out something. Our friend here was discussing about two and a half million engines being available. Well, they are there and we can't do anything about them now. But at least for the future, for the day after tomorrow, can we think of turbine setups -- for example HAL in Lucknow I am told has developed one -- they claim they have developed a small turbine which is reasonably efficient. Can that type of setup be used for getting shaft horsepower which could be used for pumping water because, if we have water and we have the excreta from the animals, there is no reason why we cannot grow biomass in Rajasthan. But how do we get started? If I plant a tree today,either the cattle will eat it or the people will come in the night and chop it up and burn it.

C: D. Bienstock: Mr. Jain, you ask several questions there. I will try to remember some. You are concerned about the hazard of using producer gas with IC engines. Could you help us on that, Dr. Flanigan?

A: V. Flanigan: I think Dr. Grover's data showed that carbon monoxide from the engine at full load is basically the same as carbon monoxide with a regular diesel-fired engine.

C: D. Bienstock. You asked about the utilization of local lignite. Professor Mazumdar, would you care to respond to that?

A: B. K. Mazumdar: Mr. Jain has hit the bullseye vis a vis the requirements of the poor people. 70% of the people of India are really poor and live in villages; more so in the arid regions of Rajasthan and Gujarat where the total energy need is a serious problem. There is very little vegetation, but here you have referred to lignite. I am not talking about high-technology; instead, appropriate technology has to be developed for the poorer people who mostly live in villages and can burn applicable cheap and environmentally acceptable fuel. The lignite you mention can be briquetted and burned with some bentonite material of 2 to 3% which can be suitably bound into agglomerates. A lot of work has been done in our Institute on that but that is smokey fuel during combustion. Meanwhile, we have discovered an agent, an additive, which can be incorporated into the briquette mix and the briquette can be burned without any smoke, and this can be adopted immediately on a small-scale, and such briquettes can be supplied to the villages to be used to cook food. Then again, as I said in the

morning, make the coal behave or devise a suitable appliance that has been achieved in principle. In our Institute we have designed smokeless chulas wherein raw coal, including lignite, can be briquetted with additives and burned. However, the poor people may not be able to buy these chulas and ordinary chulas need to be modified to accept fuels with additives.

C: D. Bienstock: In extension of Professor Mazumdar's remarks, I am familiar with a program in South Korea where they have a low-grade coal even poorer than that of India and the government briquettes it for household use. So your comment about briquetting this lignite coal is very much in order. Are there any other comments?

Q: Are there any turbines which operate on biogas in the lower range of 15 KW and the like?

A: M. K. Sridhar: In that range of 15 KW to 20 KW I do not think there can be an efficient turbine -- you can only use a biogas engine. The lowest range of turbines -- hot air or gas --which give a good efficiency will have to be in the range of 250 KW.

C: S. R. Faruqi: Mr. Jain's question is what is the

efficiency of the smaller biogas engine which has been developed by BHEL?

A: M. K. Sridhar: BHEL has not developed any biogas engine; in fact, we discussed yesterday whether the U.S. side would help us in developing a highly efficient biogas engine which can run on the low-grade fuel.

C: H. B. Mathur: I would like to comment on two things raised by Mr. Jain. One, it appears that he is under the impression that there is some sort of a competition between biogas as a fuel and producer gas as a fuel. For a country as vast as India, you can't have one unique alternate fuel for the whole country. In certain regions -- for example, Mahararastra or Tamilnadu -- you have a surplus of alcohol perhaps available. You can have engines operating on alcohol. In places like the eastern part of India you have a surplus of coal available and you have therefore producer gas as a viable unit or benzoil as a viable unit or coal-based methanol as a viable unit. We have three lakh remote villages some of them having a population less than 1000 persons. They are so remote that even if you have petroleum products or coal you can't send them there, and when you talk of rural development we have to supply energy there. Therefore

the only alternate there is biogas. Animal waste and human waste. And therefore all of these have to run in parallel. When we talk of decentralized power we have to look at all of these alternatives. The second observation I would like to make is whether it is a biogas engine or a producer gas engine, so long as it is a spark ignition engine with minimal modifications you can have 100% operation of the engine on either of the two fuels. They are both gaseous fuels -- the only difference is in one case it is methane which is the combustible constituent and in the other case it is CO and H_2. Therefore the caloric values are different, stoichiometric ratios are different, and therefore you have to make some adjustments. But essentially the methodology is the same. When you come to a compresssion ignition engine, none of them can operate as CI engine entirely. BHEL Hyderabad has developed a CI engine to have 100% operation on biogas. This is also possible with producer gas, but then you have to put a spark plug there. You are literally converting it into a CI engine and we have conceded that this is not economically viable if the horsepower is less than 50. We are talking of decentralized power, rural applications with horsepowers of 20-30-40, and therefore this is ruled out. We have to develop all of these alternate fuels, we have to develop

engines for all of them, and there is no competition between them. A lot of work has been done on the utilization of biogas in CI engines because, as I have said, we have 2.5 million diesel pump sets and 12% of our diesel which is going to the agricultural sector can be saved because we have stationary engines. It is difficult to save this with with a heavy bus or a locomotive. Therefore you can divert this diesel which is going to the agricultural sector for stationary engines into the transport sector and convert these engines. There are two options -- either you change all these engines and put in spark ignition engines, which can be very easily converted, or you have a retrofit to convert these diesel engines to operate either on producer gas or biogas.

C: S. K. Sridhar: I would like to elaborate on what BHEL has in mind. As you rightly touched upon, depending upon the different fuels available in different parts of the country, if you want to burn the fuel directly in an engine you ought to have a different type of engine so the market requirement for the different types of engines how good it will be has to be seen. Our idea is to develop a sort of standardized engines, where the fuel you simply burn it in a combustion chamber. Whether it

is biomass or biogas where available or things like wood, bark, husk, even solar energy which is available in our country -- take anything and burn it and generate heat. Heat the air or any other medium. Freon, air -- any medium -- and then run an engine. A series of standard engines can be developed which can be converted into any of the combustion systems which will generate hot air and the combustion system can be through any of these fuel sources.
Apart from the fuel sources, we have solar energy which is available in plenty, and we can use solar energy to heat air and then pass the hot air through the combustion system. On waste heat recovery -- if you want to go into the industrial application, we have so much waste heat in all our industries that can be used to heat the air. So our idea in BHEL is to see whether we can develop one or a series of engines which can make use of the low-grade heat which is obtained from any of the different fuel sources.

C: R. Ichord: The issue of Sterling engines was mentioned and we do have a company in the U.S. -- Sunpower -- which has been working on small Sterling engines and we have prototype units that are going in in Bangladesh and the Philippines and I will be glad to make available some of the information. There is a

demonstration at a rice mill in Bangladesh.

C: S. R. Faruqi: Let us go back to the question of lignite as explained by Mr. Mazumdar. The question occurs to me, as to the cost factor involved, whether the cost will be easy for the householder to bear because, as you know, most of the fuel we are using in our households in the rural areas at present is non-commercial. What would be the cost of recovering the lignite and then breaking it into pieces and binding it into briquettes and marketing it? Has Professor Mazumdar anything to say about this?

A: B. K. Mazumdar: Well, the idea has just developed but I can give you a rough estimate of the cost. Assuming the mining cost of lignite at the pit is around 100 rupees to 150 rupees per ton, then to mix it with additives and briquette it I think the cost of production of such smokeless lignite briquette may not be more than 350 or 400 rupees per ton. I know our villagers are very poor and most of them may not be able to buy this. In cities domestic coke is being sold at 800 to 900 rupees a ton. They can afford it but, even at half this price, poor people are unable to buy it. The economic level has to be improved upon and that can only come through agricultural revolution.

A: R. Ichord: I think some of this discussion goes back to what I was saying about the necessity for understanding the dynamics of the bio-resource system and the pull that urban demands for wood and biomass is having to, in terms of both the price and the strategy for trying to deal with the substitution or augmentation of supply. It may be that part of the briquetting strategy or strategy to grow wood to meet that urban demand will reduce some of the pressures on the rural supply and may be a way of dealing with the problem of the purchasing power of the villages.

Q: D. Bienstock: Dr. Vaidyeswaran, do you have some comments?

C: R. Vaidyeswaran: I do not know the moisture content of the Rajasthan lignite, but I think this figure of 350 rupees which my friend Mr. Mazumdar mentioned is going to be much higher than that. As you know, the lignite can be briquetted without a binder after drying it so this is a two-stage process. In developed countries lignite briquettes are made available mainly for space heating but when you use it for domestic purposes in order to avoid environmental pollution we have to process it further. I think only a large plant, depending upon the sources

available, should be considered of, and that should be supplied. Of course, I am equally aware that the rural population will not be able to buy it. The government will have to come in in a big way to sort of subsidize and then sell it. Also, the forest is being denuded so fast that this is a problem
we have to face.

C: B. K. Mazumdar: May I just add to this. As to the briquetting of Alanna Rajaputana lignite I thought of only Rajaputana or Gujarat, but if we take all India fuel there is another solution I have not referred to. No high technology -- no briquetting even - when necessary. I refer here to weathered coal Let me define weathered coal. All the seams of coal underground are horizontal. Some are entwined. Sometimes a seam has cropped out at a particular place, the outcrop part of the seam being exposed to the inclement weather for millenia has suffered a particular chemical change. We know the chemistry of weathering of coal. The entire carbon structure of coal has been preserved intact in our opinion over millenia but there has been some oxitative dehydrogenation bringing about a profound change in the carbon structure and thus all that coal has been converted into a smokeless fuel. It is a naturally

occurring smokeless fuel and can be a domestic fuel. Of late we have studied the combustion characteristics of this weathered coal vis a vis the possibility of its use as a domestic coal. The thermal efficiency among all solid fuels is the highest -- 35 to 40% -- even in ordinary domestic chula, compared to 18 to 25% for manufactured soft coke which is has just been referred to by Dr. Vaidyeswaran. Therefore, this weathered coal used as domestic coke in our villages at a cost will be the cheapest because it is available at the surface and as much as twenty tons can be mined in a day. We have found if you charge 2 kg of this material in your marketable chula it will give you a five course lunch or dinner for five people in the family. You calculate the monthly cost of the fuel for cooking and it may not be more than 7 or 8 rupees per month -- not even a dollar. This is the common man's fuel.

Q: D. Bienstock: May I ask a question of both DNES and AID --what do you see as the preferred direction of a biomass coal conversion program? Where do you see it heading to -- where would you like to see it heading to?

A: S. R. Faruqi: The preferred direction seems to be biomass conversion for production of producer gas

and also for generating and going into power production. DNES has proposed a very ambitious program for both directions. The idea is to utilize wasteland or land that has degenerated and not appropriate for agriculture but which can sustain certain kinds of plants and those plants also have the additional merits of higher calorific value when burned. The proposal is to use as much as possible of that huge reservoir of wasteland we have and plant trees which would survive there in accordance with the chemistry of the soil and also the climate in each part of the country. We are hoping that, in the fourth year of plantation, we will be able to harvest sufficient quantities of wood from each plantation to go into the gasifier or which can be burned and then lead to power generation. Of course, there is also the ultimate objective of providing employment for the villagers. How far this can be done is a big question because of the various problems involved right from the beginning -- the problem of getting the land, developing it, developing the saplings, looking after them, and so on. Ultimately the answer to this country's needs would largely lie in that direction of growing more and more biomass for the purpose of conversion, ultimately burning it or using it for gasification or both, and also ultimately even providing for wood to be used as ordinary direct

fueling in the domestic stoves. The technologies here are not of such an order and degree as may be beyond the immediate reach of the Indian imager. We do not need any foreign know-how, we don't need anything like a very detailed design for all these things. We know what can be done and what has been done. The problem itself is so vast and the proposal is correspondingly vast, and whether this vast proposal can be put into practice in the next few years remains to be seen. DNES certainly has a very earnest, sincere and committed program for the growing of biomass on large tracts of land, and using the biomass in all possible ways -- gasification, incineration for power production, and also the charcoal and direct burning.

C: R. Ichord: I'll take a little broader perspective with regard to our program than I have so far. I think our overall AID program is very much oriented toward trying to, of course, improve agricultural productivity and incomes in rural areas. There are several areas where we are involved, one of those being the area of social forestry which is really serving many needs, of which fuel wood is only one. It is part of a larger interest in resource management in helping provide a livelihood particularly for the poor and landless and is certainly an areas where the government is providing substantial

support through various ministries and programs. We have, for your information, two large programs currently underway --one in Madhya Pradesh and the other in Maharastara -- working on both common lands that are not agricultural and also working with private farmers to provide seedlings and other services so that in a sense they can produce fodder and other products. I think this is also important from the standpoint from the land sustainability in productivity -- a subject we have touched on here with regard to the use of residues but I think that ultimately it is an issue that is extremely important and relates very much to the energy sector with regard to fertilizer, the kinds of tradeoffs you ultimately have to face with regard to the use of residues for energy as opposed to maintaining the stability and productivity of the soil which is critical to maintaining and expanding the agricultural productivity so vital to the growing population. One dimension is to try to look at the role and increase biomass production, try to relieve some of the pressure on that resource system. Let us assume we are going to be successful, and there are strong reasons to believe we can be successful, in terms of the growing of trees under these social forestry and energy plantation programs. The issue then becomes, how can we develop efficient ways of

converting that wood resource so as to increase the productivity and the income value-added potential of rural areas, either at more centralized processing facilities like mills, etc. or in smaller scale productive activities like irrigation or on-farm activities. I think that is where a lot of our discussions over the last two days have focused but it seems to me that one of the priorities is how to get a better match and integration between the activities that are occurring on the production side and the planning with regard to the technologies and market systems to more effectively utilize that wood, because India as well as other countries in Asia is spending large amounts of money on these production programs. The figure that sticks in my mind is $500 million or the equivalent will be spent on social forestry programs in the next Plan, maybe even more, and it is important that this wood be used efficiently and effectively in terms of cooking and other major applications. That is where the conversion program and our ability to develop sound and socially acceptable and economically acceptable solutions takes on a tremendous importance in light of these major initiatives that are being pursued. From my experience in seeing the region as a whole, I think there is room for optimism with regard to both the potential for power generation as

well as for small-scale gasification and activities that can be produced as we get the biomass material. To some extent, even the conversion device -- if properly introduced -- can serve as a stimulus and a market for this production and provide an even greater incentive for the farmer or the village community to pursue these programs. It is important to be sensitive to the impacts of these programs on the poor and landless to ensure that the programs are not having a deleterious impact rather than a positive one.

C: A. K. Chakravarti: The domestic sector is the largest user of energy in India. The consumption figure is over 200 million tons of coal equivalent per year. I have worked on domestic fuel preparation starting from the raw material -- wood, forest waste, agricultural wastes, lignite, subbituminous coal as well as anthracite and semi-anthracite. With regard to wood, forest waste and agricultural waste, in the normal method of burning a lot of fumes escape leading to pollution and the overall thermal efficiency is hardly 14-15%. In a modified chula device, with secondary air admission, there is intermixing of air and burning matter and the efficiency can be definitely increased. It is direct burning of the woody matter but now, if we de-smoke it by devolatilization, we get

30 to 35% of the yield of charcoal. Referring to Dr. Jain's question, lignite gives much higher percentage of char by devolatilization, over 50, because it has less volatile matter and less moisture on an air-tight basis, and beautiful char and rejected char can be produced by fluidized carbonization at low temperature, giving the volatile matter in the char as high as 20 but at the same time smokeless, completely free from tar. Out of this particular char, agglomerative fuel may be made by pelletization -- also this briquetting is not necessary -- mechanical or human method agglomerates can be produced which will have excellent binding properties in common chulas with high combustion efficiency. So this is another aspect. We have done some experiments with raw lignite for making cheap fuel which will burn with little emission of smoke. We took the lignite from Kutch. This lignite was crushed and mixed with a heavy percentage of mud or local bentonite and hand pellets were made. These were burned in a little specialized chula with the entry of secondary air and, by burning in small increments, almost smokeless combustion was achieved. We have demonstrated this in a seminar in Bombay. The lignite is very reactive and, if it is burned as is in the chula, then voluminous volatiles and tars come out and pollute the atmosphere. But if we adulterate it with a

high percentage of mud and make the hand pellets and, after drying, charge in small increments these can be burned almost smokelessly and the heat level is quite high.

END OF PANEL DISCUSSION

APPENDICES

APPENDIX A

PRESENTATIONS MADE AT THE BIOMASS MORNING SESSION

FEBRUARY 5, 1985

1. A Comparative Study of FBC of Low-Grade Fuels
   Dr. A. K. Drona, Sr. Research Officer, Department of Agricultural Engineering, G. B. Pant University Agriculture and Technology, Pantnagar

2. Preliminary Experience with a Fixed-Bed Gasifier
   Dr. A. K. Rajvanshi, Director, Nimbkar Agricultural Research Institute, Pheltan

3. Biomass Gasification System
   Dr. R. C. Maheshwari, Indian Council of Agricultural Research, New Delhi

4. Biomass Research Thrust and Programmes
   Dr. S. B. Hukkero, Head, Agro-Energy Centre, Indian Agricultural Research Institute, New Delhi

5. Biomass Gasification
   Dr. K. S. Shah, Assistant Director, Gujarat Energy Development Agency, Vadodara

6. Impact of Biomass Availability on Selection of Energy Systems
   Prof. P. R. Shukla, Indian Institute of Management, Ahmedabad

7. Gasifier - A Means of Cooking at No Cost
   Dr. C. S. Shah, Head, Mechanical Engineering Department, B. V. Mahavidyalaya, Vallabh Vidhanagar

8. Wood Gasifiers
   Prof. H. S. Mukunda, Indian Institute of Science, Bangalore

9. Biomass as an Alternative of Energy for I.C. Engines
   Dr. (Mrs.) P.P. Parikh, IIT, Bombay

*****

PAPERS NOT INCLUDED IN APPENDIX A WERE NOT AVAILABLE AT TIME OF PRINTING.

FOR A COPY, PLEASE CONTACT AUTHOR DIRECTLY.

*****

BIOMASS GASIFICATION ACTIVITIES OF GEDA

K. S. Shah
Gujarat Energy Development Agency
Vadodara, India

GUJARAT ENERGY DEVELOPMENT AGENCY
D.N. CHAMBERS, 3RD FLOOR
R.C. DUTT ROAD
VADODARA - 390 005

BIOMASS GASIFICATION ACTIVITIES OF GEDA

1.0 INTRODUCTION :

The most convenient way of storing Solar energy is that of biomass production. Even though its photo synthetic conversion efficiency is of the order of 0.5 to 1 per cent biomass can be stored very conveniently almost indefinitely. Further, production of biomass on semiarid and saline waste land not only prevents salinity ingress and soil erosion, but also prevents further desertification. It also helps in easing the fuel-wood crisis. GEDA is therefore undertaking several research and popularisation progress in the area of energy plantation, use of forest waste, agro waste and wood chips as well as wood for use in domestic combustion devices, gasifiers etc. GEDA has also undertaken the National Improved Wood Burning Cook Stove Demonstration Programme of DNES in Gujarat on a large scale.

2.0 GEDA'S ACTIVITIES :

GEDA is the nodal Agency of the Government of Gujarat and the Department of Non-Conventional Energy Sources for the State of Gujarat for activities in the areas of new and renewable sources of energy and energy conservation. It works in very close association with State level organisations like Gujarat Electricity Board, Gujarat Water Supply & Sewerage Board, Rural Technology Institute, Gujarat State Rural Development Corporation, Gujarat State Forest Development Corporation, Gujarat Government Forest Department and several academic and research Institutions and voluntary organisations at National and International

This area, eventhough irrelevant to the topic under discussion, needs mention to indicate the range of application of Gasifiers. I would also like to add that large megawatt size gasifier based power generating stations will be supported by energy plantations of the order of 1000 ha through number of Village Workers Cooperative Societies consisting of 11 member families each and having about 100 ha land alloted to each cooperative society. Appendix - I shows the modus operandi for such a combination of large scale cooperative energy plantation and multi-megawatt gasifier based power stations.

3.0 RESEARCH AND DEVELOPMENT PROJECTS :

Charcoal based gasifiers do not produce much tar or soot and the development of such gasifiers as well as their cleaning and filtering units have already been quite well developed. R & D efforts, however, are necessary for pretreatment and handling of other fuels like wood chips, forest waste, agro wastes like cotton stalk, groundnut shells, caster seed shells, paddy husk, coir husk etc. In some cases partial charring, briquetting, pelletizing with or without binder material etc. is needed. For this purpose, GEDA has undertaken several experimental demonstration and popularisation projects of various capacities.

3.1 FIELD DEMONSTRATION OF 3.5/5 KW GASIFIER PUMP SETS :

GEDA has sponsored the project proposal of Jyoti Solar Energy Institute, Vallabh Vidyanagar to the Ford Foundation through the Department of Non Conventional Energy Sources and Department of Science & Technology for U.S. $ 30,000/- for setting up 25 gasifier engine and pumpsets for irrigation to collect operating and maintenance data over a period of about 2 years. The project has been sanctioned and is under implementation.

...4/-

3.2 10 KW GASIFIER BASED REVERSE OSMOSIS SYSTEM :

GELA has proposed to DNES a gasifier based reverse osmosis system for drinking water scheme for the "no source" village of Limbad in the semiarid district of Surendranagar. The water supply is very brackish with total disolved solids of more than 3000 ppm in summer. a 10 KW gasifier will use the fuel-wood from the village forest of 4 ha and produce cool clean gas to operate a duelfuel engine for running a high pressure water pump. The water pump will supply pressure for passing brackish water through the R.O. membranes to obtain potable water.

3.3 GASIFIER BASED IRRIGATION SYSTEM.

Several villages in Surendranagar district have nonperennial rivers and rivulets passing near the villages, if pits of about 2 to 3 m deep are made in the reverbed, sub-soil water is available with very low recharge. The villagers make several such pits and use one or more diesel pupm-sets to pump the water and transport it over more than 1 km for irrigation purposes. This activity can very well be taken up on cooperative basis. The main fuel of such villagers is fire-wood or agricultural waste. If improved cook stoves are popularised with such villagers, more than 60 to 80 percent of the domestic use of fuelwood or agro-waste will become saved. Such waste can be used after pretreatment in gasifiers.

DNES has sanctioned to GELA two 10 KW gasifier powered engine pumpsets for community irrigation in the villages of Dudhai and Malvan in the Surendranagar district. The village Panchayat is agrreable to supply the village forest products. A multi-purpose village cooperative society will handle the operation and maintenance of the gasifier based engine pump irrigation system.

3.4 BAIF PROJECT FOR GASIFIER IRRIGATION SYSTEM

BAIF has been doing work at Urulikanchan near Pune for last several decades. They have extended their activities to Gujarat also. They are taking up energy plantations, agrowastes and forest wastes utilisation and gasifier based engine pumpsets for irrigation and village drinking water supply. For the districts of Valsad, Dangs and Surendranagar, BAIF has formed landless labour cooperatives to take up Government land on lease to plant quick growing species of trees for supply of domestic cooking fuel and gasifier fuel for running engine pump sets. GEDA has sanctioned to BAIF susch systems in 7 villages covering 50 ha of waste land and running about 25 gasifier engine pump sets for irrigation and drinking water supply at a total cost of Rs.26 lakhs for a period of 5 years.

3.5 MOBILE GASIFIER UNITS

With the collaboration of Gujarat Tractor Co.Ltd., producing 25 to 55 HP tractors of wheeled as well as crawler type, GEDA is preparing a project proposal for development of 10-50 KW mobile gasifier units using pretreated agro/forest waste for operation of tractors, trucks and buses for submission to DNES. Foreign collaboration for gasifier manufacturer is envisaged.

3.6 POPULARISATION OF SMALL GASIFIERS

GEDA has proposed in its 7th Five Year Plan putting up 2000 gasifiers of small size under demonstration subsidised marketing at the sites of diesel engine pump sets of farmers are using them for irrigation.
The gasifiers are expected to use wood chips, forest/agrowastes available with the farmers as fuel and are expected to result in considerable saving in HSD, LDO consumption in the State.

...6/..

3.7 100 KW GASIFIER ENGINE GENERATING SETS

GEDA has sanctioned from its own funds 2 systems, one working on forest refuge for captive operation at Waghai Timber Station of the Forest Department of Government of Gujarat and another working on forest wastes for parallel operation with the grid net-work at Surendrabaug in Bhavnagar District. Both the systems are of 100 KW electrical output. Order for the systems at Surendrabaug has already been placed with an indigeneous manufacturer and that for Waghai is in the process of being approval at DNES.

3.8 1000 Ha - 1 MW ENERGY PLANTATION-CUM-POWER GENERATION PROJECT

A system for utilisation of waste land in the districts of Kutch is being proposed to DNES as described in Appendix - I. The project involves a total expenditure of Rs.252.25 lakhs over a period of 5 years.
This project will be forerunner for smaller projects over the whole of India and will generate, in addition to power, also employment in the rural areas and will improve enviornment.

3.9 GASIFIER ENGINE SETS AS NUCLEUS FOR INTEGRATED RURAL ENERGY CENTRES (IRECs)

In the villages where cattle breeding and agricultural activities are undertaken by most of the population, a community biogas plant becomes the nucleus for Integrated Rural Energy Centres(IRECs) based on local renewable energy sources. In case the activity of the majority population is cattle breeding, there is no use of slurry as fertiliser. Where agriculture is the major occupation, there is not much dung availability to support the biogas plant. In such cases a gasifier based engine system is ideally suited as the nucleus for IRECs.

Agricultural or forest wastes can be pretreated as well as wood chips can be used as fuel for gasifiers which can operate large engine generator sets for electrical power generation or engine pump sets for satisfying the drinking water supply and irrigation requirement of remote village.

GEDA has taken up a numbers of villages for proposing gasifier based IREGs. Two such examples are villages of Khandia in Vadodara distric and Tikar in Surendranagar District and several more such villages are being proposed to DNES.

In Tikar, agro wastes which mainly consist of cotton stalk and which are being used in domestic cook-stoves at efficiencies of less than 5 could be converted into briquettes by using manually operated briquetting machines by the villagers. This will generate employment and briquettes can be burnt in improved cook stoves at efficiencies of more than 15% so that the cotton stalks saved could be used in gasifiers to run engine-generator and engine-pump sets. Thus without depriving the villagers of their domestic fuel, electricity can be generated and the fields can be irrigated using the same cotton stalk.

4.0 OTHER BIOMASS ACTIVITIES

Other and above using gasifiers, GEDA has also undertaken other projects involving use of effluents from industrial alcohol plants to generate methane for use in the boilers and hence to reduce conventional fuel consumption by 60%, popularisation of improved cook stoves by constructing 1000 stoves in 1984-85 and about 4000 in 1985-86, the pilot plant project for use of muncipal solid wastes as land fill for producing methane for power generation, full scale muncipal solid waste land-fill project for the city of Ahmedabad, popularising community type and institutional biogas plant for different purposes etc. GEDA has also proposed to DNES two projects for briquetting groundnut shells and cotton stalk and thereby commercialising them.

5.0 CONCLUSION

ANNEXURE I

NOTE ON COOPERATIVE 1000 has - 1 mw ENERGY PLANTATION CUM POWER GENERATION PROJECT

There are vast tracts of saline or semiarid soil in most of the regions of the district of Kutch of Gujarat. A part of the district is covered by the Southern and of the Thar desert. Some part of Kutch is waterlogged for some months in a year. The crestline of the distric as well as the coastline on the South are populated. The major profession of the population is cattle breeding, rope making cabinet making, boat building, tie-dye work etc. Many of traditional occupations are being given up by the artisans due to lack of raw material or market. These buildings need to be given alternate employment.

In view of overgrazing as well as Southward progress of the Thar desert. Severe soil erosion is experienced. Attempts are being made by the Government to plant euphorbia and elephant grass to limit the progress of the desert, resulting in limited success.

It is felt that afforestation with quick growing spaces will lead not only to the control of soil erosion but also provide cattle feed, wood for construction activity, fire-wood and fuel wood. It would also provide raw-material for artisan families, traditionally occupied earlier in cabinet making rope making and boat building. Thus energy plantation would support the migratory cattle breeding population, artisans and other unemployed landless farmers in the region.

..2./-

The member families will provide all the labour required for plantation activities and their accounts will be credited with the wages at the minimum wages declared by the State from time to time or higher as case may be. The member families will be provided fire-wood and wood refuse for their domestic requirements free of charge from the plantation. They would also be provided with improved chullahs burning firewood and/or forest refuse under National Improved Chullahs Demonstration Programme. If they are maintaining cattle indivisually or on co-operative basis, cattle feed from the plantation will be supplied to them on payment. The forest refuse and fuel wood required in the necessary mix, will be sold to the 1 mw gasifier power generation plant at Naliya on payment of Rs. 300/- per air dried tonne, delivered at the plant site. The transportation of the produce to the power generating plant will also be handled by the co-operatives. Excess plantation products will be sold commercially and the proceeds will be credited to the co-operative society. The co-operative societies can also take-up handicraft and other activities for its members.

Under this scheme 100 families of an average five members per family are expected not only to be gainfully employed but also to be provided livelyhood in some other professions, cattle breeding, artisanship etc. Such families are likely to have income of more than Rs. 1000/- per month per family. In addition to this, seasonal employment for several other people is also likely to be generated by the plantation activities.

1 mw Gasifier Power Generation Plant at Naliya

A 1 mw gasifier requires fuel-wood/forest refuse of the order of about 9000 tonnes p.a. which can be obtained from unirrigated plantation of about 820 ha. Thus the 1000 ha plantation, after supplying the requirements of the power generation plant would have enough surplus fuelwood, forest refuse cattlefeed etc. for internal consumption of the members of the co-operative societies and for commercial disposal.

The gasifier based power generation system would have three to five units totalling to 1 mw to provide flexibility of operation, maintenance and stand-bye availability. The internal combustion pine/mover could be working on engine or turbine pree depending upon the taking economic feasibility. Co-generation would be incorporated in the system to increase its plant efficiency.

During the duration of the project, the power plant would be jointly operated and monitored by GEB and GEDA. On successful completion of the project, the plant will be handled over to Gujarat Electricity Board.

If the techno economic feasibility of the 1000 ha co-operative energy plantation is considered separately, and the fuelwood/forest refuse supplied by it to the power generating plant is sold at Rs. 250/- per tonne. At site the cost of power generation comes to Rs.1.132 per KWH, which is quite satisfactory.

The Gujarat Electricity Board is willing to purchase electricity produced from the renewable energy sources at not more than Rs. 1.25 per KWH, so that the power generating plant has good economic feasibility.

IMPACT OF BIOMASS AVAILABILITY ON SELECTION OF ENERGY SYSTEMS

P. R. Shukla
T. K. Moulik
Indian Institute of Management
Ahmedabad, India

IMPACT OF BIOMASS AVAILABILITY ON SELECTION OF ENERGY SYSTEMS

Prof P R Shukla
Indian Institute of Management
Ahmedabad

and

Prof T K Moulik
Indian Institute of Management
Ahmedabad

A_B_S_T_R_A_C_T

This paper assesses the impact of biomass availability on the selection of energy systems, allocation of energy to various energy needs and energy costs for a village. Proposals regarding development of biomass resources and subsidizing biomass based energy systems are considered. The analysis is based on optimal energy systems selection, energy allocations and costs for four villages under existing conditions and under various proposals using an optimization model.

1 INTRODUCTION

The present authors in reference [1] presented the Mixed Integer Linear Programming (MILP) approach for optimal selection of energy systems and allocation of energy to several end-uses at a particular location. While applying this optimisation model for integrated rural energy systems to several villages, the importance of biomass availability and its energy conversion technologies was found to be one of the most critical parameters. In this paper we analyse the importance of biomass availability and conversion in planning to meet rural energy needs in India especially in view of the serious supply-demand constraints of conventional sources of energy in India. The role that biomass energy could play in relation to India's growing rural energy needs is often optimitically projected. In this optimistic projection, the three important determining factors are the availability of suitable biomass, the efficiency of energy conversion technology and its cost. An attempt has been made in this paper to examine critically the role of these three factors in order to realistically assess the ultimate potentialities of biomass as energy sources in rural India.

The problem considered in reference [1] is to select energy systems and allocate energy from these to meet various types of energy needs of a village during different time periods in a year

so as to minimize total annual costs, i.e. the sum of annual fixed cost which includes depreciation, interest and maintenance cost and annual running cost of the system. The optimization model is used to select energy systems and make energy allocations to different energy needs of a village. The analysis is illustrated in this paper by considering applications to four selected villages.

2 Energy Related Data

The energy related data required by the optimization model is given below for the four villages under consideration.

2.1 Village Energy Needs

For the four villages considered, the energy needs are classified by four end uses:

1) Cooking
2) Hot Water
3) Irrigation
4) Electricity

The annual energy requirements for these end-uses for each village is as in Table 1 below:

Table - 1

Annual Energy Requirement (in KWH) for four villages

End use Type \ Village	1	2	3	4
Cooking	2,10,000 (76.53)	4,35,000 (74.49)	7,05,000 (73.55)	14,11,200 (74.83)
Hot Water	34,000 (12.39)	75,840 (12.98)	1,22,400 (12.77)	2,45,400 (13.03)
Irrigation	8,700 (3.19)	7,500 (1.28)	42,000 (4.38)	66,500 (3.53)
Electricity	21,675 (7.89)	65,670 (11.25)	89,100 (9.30)	1,60,200 (8.51)
Total	2,74,375 (100.00)	5,84,010 (100.00)	9,58,500 (100.00)	18,83,300 (100.00)

Note: Figures in brackets represents percentage of total energy requirement for a village.

2.2 Raw Materials Availability

The village energy needs are satisfied with fuels such as wood, gobar, diesel, kerosene, coal etc. The local biomass energy resources - wood and gobar have restricted availability as given in Table 2 below:-

Table-2

Annual Raw Materials Availability (in KWH) at Four Villages*

Raw Material \ Village	1	2	3	4
Gobar	1,87,000	2,81,000	4,37,000	3,13,000
Wood	14,00,000	5,62,000	6,05,000	29,07,000

*The figures in this table represent the potential energy availability from a raw material. The actual energy availability at the demand level is then computed by considering efficiencies of energy systems used.

3 Energy Systems Considered

Energy systems are classified in two major categories - primary and secondary. Primary systems are the ones which generate the energy whereas the secondary energy systems are

sometimes used to supply energy produced by a primary energy system to a given end-use. Of the various energy system available some were eliminated from consideration for the present application on the basis of their high costs (e.g. photovoltaic systems) which will in any case make their selection impossible. The description of the energy systems and sizes considered in the present application and end-uses supplied by them are as follows:

3.1 Primary Energy Systems, Sizes and End-use

	Primary Energy System Description	Size of the Primary energy system	End-uses that can be supplied by the energy system
1	Biogas Plant	5 cu. m. 25 cu. m. 60 cu. m. 85 cu. m.	1,2,3,4
2	Solar Cooker	--	1
3	Solar Hot Water Panel	250 litres	2
4	Wood Burner	--	1,2
5	Kerosene Stove	--	1,2
6	Wind Mill	3 KW, 10 KW	3
7	Diesel Pump Set	5 KW, 10 KW	3
8	Diesel Generator Set	5 KW, 10 KW	4
9	Centralized Electricity	--	3,4
10	Gasifier	5 KW, 10 KW, 25 KW	3
11	Gasifier Generator Set	5 KW, 10 KW, 25 KW	4

3.2 Secondary Energy System and Sizes

	Secondary energy system description	Secondary energy system size description
1	Biogas Burner*	--
2	Dual-fuel engine** and pump-set	5 KW
3	Dual-fuel Engine*** and generator set	5 KW, 10 KW, 25 KW
4	Motor and Pumpset****	5 KW

* used for cooking using biogas

** used for irrigation using biogas and diesel

*** used for electricity generation using biogas and diesel

**** used for irrigation using centralised electricity.

4 Formulation and Computations

The MILP formulation in present application includes twentyseven integer variables relating to twentyseven energy systems (including different sizes) and fortytwo real variables relating to distribution of energy from different energy systems to different end-uses in three different time periods during an year. Besides, the problem formulation includes fortyfive constraints. The problem for each village is solved using the

MILP computer package [2] on VAX 11/730 computer. The average time for a computer run was one minute and thirty seconds.

5 Analysing Optimal Results

The optimal system selection, energy allocation and costs under existing data (called Normal data hereafter) for the four villages is as follows:

5.1 Energy System Selection (Normal Data)

Energy systems selected in the optimal solution which minimises the annual costs for each village are as in Table 3 below:

Table - 3

Energy Systems selected for four villages (Normal Data)

Sr. No.	Energy Systems	Number of Systems			
		Village 1	Village 2	Village 3	Village 4
	PRIMARY SYSTEM				
1	Biogas Plant $25M^3$	-	-	2	-
2	Biogas Plant $85M^3$	1	2	2	2
3	Solar Cooker	102	309	419	754
4	Solar Hot Water Panels	7	17	28	56
5	Wood Burner	102	309	419	754
6	Kerosene stove	-	309	419	754
7	Diesel Pumpset 5 KW	-	-	1	-
8	Diesel Pumpset 10 KW	1	1	4	7
9	Diesel Genset 5 KW	-	1	-	-
10	Diesel Genset 10 KW	1	-	-	1
11	Centralized Electricity 5 KW	1	4	6	10
	SECONDARY SYSTEM				
1	Biogas - Burner	102	309	419	754

5.2 Annual Energy Allocations for four village (Normal Data)

The allocation of energy for the optimal solution for four villages are as in Table 4 below:-

Table -4

Allocation of Energy for Four village (Normal Data)

Enduse	Energy Systems	Annual Energy Consumption (KWH)			
		Village 1	2	3	4
Cooking	Biogas	89,340	1,53,411	2,26,710	1,68,520
	Solar Cooker	70,000	1,45,000	2,35,000	4,70,400
	Imp. Wood Chulah (Burner)	50,657	35,124	37,812	1,81,690
	Kerosene Stove	--	1,01,461	2,05,474	5,90,610
Hot Water	Solar Hot Water Panels	35,000	83,400	1,36,800	2,73,800
	Wood Burner	1,600	--	--	--
	Kerosene Stove	--	530	--	200
Irrigation	Diesel Pumpset	8,700	7,500	42,000	66,600
Electricity	Diesel Genset	6,690	5,700	--	10,200
	Centralised Electricity	15,000	60,000	89,100	1,50,000

5.3 Costs for four village (Normal Data)

The costs due to the optimal solution for four villages are as in Table 5 below:

Table - 5

Costs due to Optimal Solution for four villages(Rs) (Normal Data)

Costs \ Villages		1	2	3	4
1	Fixed (Capital) Cost	440540	1199860	1844315	3087980
2	Total Annual Cost	153175	424259	706934	1426368
3	Annual Variable Cost	43040	124297	245855	654373
4	Cost/KWH of energy	0.558	0.726	0.737	0.757

The Table 6 gives the unit variable cost of supplying energy for each end-use in each village.

Table - 6

Unit Variable Costs (Rs./KWH) For Each End-use for Four Villages (Normal Data)

End-Use \ Village		1	2	3	4
1	Cooking	0.084	0.208	0.243	0.367
2	Hot Water	0.015	0.005	0.000	0.001
3	Irrigation	1.220	1.220	1.220	1.220
4	Electricity	0.650	0.370	0.260	0.341

6 Analysis of Results and Observations

In the optional solution for four villages under existing conditions (Normal Data), it was also found that the local Biomass resources, i.e. gobar and wood, were completely used up (i.e. the constraint relating to these resources had no slack at optimality), except for village 1. In village 1, wood constraint had slack due to the fact that in this village energy plantations are being raised and hence wood is available in plenty. The scarcity of these local biomass resources leads to the use of costly fuels like kerosene and diesel, as can be seen from Table 4. The use of kerosene as can be seen from Table 5 results in substantial increase in unit

variable cost of energy for villages 2,3 and 4 in comparision with village 1 where kerosene is not used. For the same reason unit variable cost of cooking energy for village 1 is substantially lower than that for the other three villages. The results with normal data thus indicate that:

(1) Local availability of biomass resources like gobar and wood can result in substantial reduction in energy costs to a village;

(2) While both gobar and wood can provide energy for irrigation as well as electricity through dual-fuel engines, their current restricted availability limits their use only to meet a fraction of cooking energy needs;

(3) Use of solar energy for a part of cooking needs (through solar cookers) and for hot water needs (through solar hot water panels) is found to be economical due to their zero variable costs as well as low fixed (capital) costs.

From these observations, it is obvious that an increase in the availability of biomass resources can result in substantial savings in the cost of energy. Hence the developmental efforts such as energy plantations, improving gobar collection and promoting the use of alternate biomass for biogas plants

such as agricultural waste, water hyacinth etc. deserve consideration. Besides, the governmental assistance through subsidies on systems utilizing local biomass resources can also help in promoting such energy systems. To study the impact of various developmental efforts and governmental schemes on selection of energy systems, allocation of energy and costs, the MILP model is used under various assumptions regarding the availability of biomass and costs for the four villages under consideration.

The proposals considered for the purpose of these analysis are:-

(1) RELAXING WOOD AVAILABILITY CONSTRAINT

This proposal is considered to study and assess the impact of fuel plantations.

(2) RELAXING WOOD AVAILABILITY CONSTRAINT AND SUBSIDISING GASIFIER BY FIFTY PERCENT

This proposal is considered to study and assess the impact of partially subsidising the gasifier specifically whether the partial subsidy can help promote the economical use of gasifiers or not.

(3) RELAXING GOBAR AVAILABILITY CONSTRAINT

This proposal is considered to study and assess the impact of developmental efforts for alternate biomass resources for biogas plants.

The results obtained under these proposals and impact of these proposals are discussed next.

7 Impact of Relaxing Wood Availability Constraint

The comparision of results obtained under this proposal with the results under normal data assumption suggest the following changes in energy system selection, allocation of energy and costs.

7.1 Changes Observed in Energy Systems and Energy Allocations

Comparison of optimal results under the above two types of data assumptions yields the following:

1) For village 1, there is no change in energy systems selection, allocation and costs when wood constraint is relaxed since this village has large amount of wood available even in normal conditions which was evident from the fact that for this village there was considerable slack in wood constraint at optimality in results with normal data.

2) For other three villages, use of kerosene for cooking and hot water demands is being replaced by wood when wood constraint is relaxed.

3) For irrigation and electricity demands even when wood constraint is relaxed there is no change in system selection and energy allocations. The gasifier based systems are not selected, even if wood is made freely available.

7.2 Cost Savings

Comparison of costs under the assumption of relaxing wood availability constraint with costs under normal data shows following cost savings as given in Table 7 below:-

Table - 7

Annual Cost Savings For each Village when Wood Constraint is Relaxed

	Village 1	Village 2	Village 3	Village 4
Annual Cost Savings (Rs.)	0	52,226	57,434	2,57,565

8 Impact of Relaxing Wood Availability Constraint and Subsidising Gasifiers by Fifty Percent

As compared with the results when the wood constraint is relaxed in section 7, in addition when the gasifier is subsidised by fifty percent, significant changes are observed in the selection of energy systems and allocation of energy

for irrigation and electricity needs for some villages.

8.1 Changes Observed in Energy Systems and Energy Allocation

1) No change is observed in village 1 and 2 in energy system selection and energy allocation for irrigation demand as irrigation demand is very low for these two villages ~~since~~ and at such low energy demands gasifier pumpsets are not cost effective due to their higher capital (fixed) costs even when subsidy is given to gasifier, in comparison with fixed cost of diesel pumpsets.

2) In village 3 and 4, where the irrigation demand is substantially high compared to villages 1 and 2, in the optimal solution gasifier pumpsets are selected replacing diesel pumpsets selected under earlier data assumption. Thus, it is optimal to meet most of the irrigation demand by gasifier pumpsets when gasifiers are subsidized by fifty percent.

3) In all the four villages, entire electricity demand is being met by gasifier gensets, replacing centralized electricity, as well as diesel gensets used under earlier data assumptions.

4) Thus, fifty percent subsidy on gasifier can effectively help selection of gasifier based systems if wood is freely available.

9 Impact of Relaxing Gobar Availability Constraint

When raw material availability for the biogas plants is unconstrained, substantial changes are observed in selection of energy systems, allocation of energy and costs as compared to normal data.

9.1 Changes Observed in Energy System Selection and Energy Allocation

The following changes are observed in comparison with normal data:-

1) Cooking demand is met mostly through biogas, while solar cooker and wood burner are also used to some extent. Use of kerosene is completely eliminated.

2) For most of the hot water demand, solar hot water panels are replaced by biogas.

3) For irrigation and electricity demands, all other systems are eliminated and only biogas based dual-fuel engines are used, coupled with pumps for irrigation and generator sets for electricity.

Thus, if biomass which can be used in biogas plants is freely available, it is optimal to supply most of the village energy needs through biogas based systems.

9.2 Cost Savings

The comparison of costs under the assumption of free

availability of gobar with costs under normal data shows the following cost savings, as given in Table-8 below:-

Table - 8

Annual Cost Savings for Each Village when Gobar constraint is relaxed

Village	1	2	3	4
Annual Cost Savings (Rs.)	31,202	1,44,695	2,51,455	5,81,953

10 Conclusions

The results of this study suggests that decentralised energy systems making use of locally available renewable source of energy have a considerable potential in fulfilling a substantial amount of energy needs at village level. However, with the present availability of local biomass resources, decentralized systems can only meet a small fraction of energy needs and therefore large quantities of expensive and scarce fuels such as kerosene and diesel are needed. A clear conclusion from this study is that the availability of biomass resources at village level through fuel plantations or developing alternative resources for biogas plants such as agricultu.

waste, water hyacinth, etc., can result in a significant saving of money to a village which is otherwise spent on expensive and nationally scarce fuels. Subsidising the energy systems utilising local biomass resources, such as gasifiers, can promote the economical use of such systems, thereby saving on scarce national resources such as diesel and centralized electricity. The development of biomass resources thus have tremendous economical potential and it deserves immediate attention from agencies planning for rural energy needs. Together with the developmental efforts for biomass resources, technological aspects such as improvements in energy systems and development of alternate energy systems, and managerial functions like periodic planning for growing rural energy demands and operational aspects of energy systems management are also other important areas deserving attention for effectively developing and using integrated rural energy systems for meeting the rural energy needs.

R_E_F_E_R_E_N_C_E_S

/_1_/ Shukla P R and Moulik T K, "Selection of Energy Systems and Allocation of Energy to Multiple End-uses," presented at Seventeenth Annual Convention, Operational Research Society of India (ORSI), December 1984.

/_2_/ Land, A.H., and Power S, "Foitran Codes for Mathematical Programming," Wiley (London), 1973.

WOOD GASIFIERS

H. S. Mukunda
Indian Institute of Science
Bangalore, India

WOOD GASIFIERS

This report deals with the results of the investigations on the development of a 3KW gasifier for running diesel as well as petrol engines. The effort concentrates on running both diesel and petrol engines because of the nature of their use.

1. About 5 million diesel engines contemplates our working in our country. It would be possible to provide a gasifier to replace about 85% of the diesel used in these applications.
2. For all new developments where the engine has not been installed yet, it will be beneficial to run a petrol/kerosene engine because the cost of engines are about same and one can replace the entire petrol by the gas though at an expense of 30% or so of the power.

With these twin objectives in mind, development effort of about 3 Years has resulted in several novel concepts and features which are different from those of the existing systems elsewhere for this level or higher power. It has also been found that many of the geometric parameters has recommended or extraculated simply from the work in SERI needs significant changes.

The design constraints on the present gasifier are:

1. The gasifier must permit examination of its internal elements or dis-assembling of its components with relative ease.
2. Its production method must be such as not to permit leakage into it through handling by a men of average competence or slight carelessness.
3. To conserve any waste energy through drying of wood chips or other possible uses.
4. This design must be as simple as is possible.
5. The cost of fabrication in production must be as low as possible.

..2.

The author has bestowed one's attention to the first 4 items and the last item is being attended to presently. It is also hoped that the first 4 items will partially look after the last consideration. During the developments there were 4 versions of the reactor each one attempting to improve upon the previous or eliminate the suspected defects. In its features, the following are the difference between the current reactor and the previous one's. [Table Attached].

As is evident from the table, the current design has several novel features compared to the previous one's. The current status is that it is ready for field tests and in about 2 months time it will be subjected to about 6 months of field tests at UNGRA, a village adopted by the Institute.

	Others*	Present	Remarks
1. Throat diameter	55mm and above	30mm	The gas quality was very consistent throughout the run at a flow rate of 3,5 lts/sec. The same flow rate with a larger diameter throat 35mm, generated fluctuating gas quality. Good quality gas contained (as measured) CO = 20%, CO_2 = 11%, O_2 = 0,6% (H_2 was not measured).
2. $\frac{\text{Area of air inlet nozzles}}{\text{Area of throat}} = \frac{A_m}{A_h}$	0,14-0,22	0.25	Initially the prototype No.3 was operating with an A_m/A_h of 0,09. On changing the A_m/A_h to the higher value, the pressure drop decreased, flow rate was steady and gas quality consistent.
3. Hearth load	0,4 to 0,9	1,7	The recommended hearth load i.e. the rate of gas flow in Nm^3/hr to the smallest passage area (throat) in cm^2, for similar types of reactors is between 0,4 to 0,9. The higher value as expected caused dusting when the throat diameter was reduced to raise the hearth load to 1,7. However the dust is handled by the cooler-regenerator system. On the other hand the advantage is that the gas contains negligible amounts of tar.

..2.

3. Condensate collector	Provided	Provided	The condensate collector is essential for the smooth operation of the gasifier. If the collector is not used, then the start up of the reactor is very difficult and also the gas quality is poor because of higher water vapour content.
4. Grate	Most use shaking grate	Provision to clear grate and reduction zone while in operation	If the pressure drop across the reactor increases gas quality decreases, one of the causes could be the presense of some muck (e.g. partially charred wood, fused ash, etc.) in the reduction zone which prevents efficient reduction taking place. Hence a provision is necessary to clear the grate and reduction zone to improve the gas quality.
5. Feeding and Sealing system	Feeding through a top hinged cover and sealing with a gasket	Feeding through a top cover with a water seal	The water seal prevents leakage and also facilitates easy and quick loading of fresh charge of wood.
6. Cooler - Cleaner system	Cyclone, scrubber	Heat exchanger and water/oil filter	The cleaning and maintenance of cooler cleaner system is very simple. It has a low pressure drop, no packing in cooler so clogging does not occur, absolutely leakproof and performs all the functions of a scrubber. In addition a large surface area is provided on the heat exchanger to partially recover heat by drying wood chips on its sides.

7. Installation	Vibrations found necessary	Vibrations found unnecessary	Vibrations force semi-charred particles of wood to drop through the throat into the reduction zone. Until these pieces are consumed the gas quality is poor. Hence it was found that vibrations were unnecessary for this gasifier.

* References

1. The Swedish Experience 1939-1945, SERI.
2. Development of Small Gasifiers for Irrigation purpose in India, JSERI.
3. Biomass Based Gasifier-Engine System, JSERI.
4. Producer gas from wood/charcoal for state power generation and irrigational applications, JYOTHI LTD.
5. State of Art of Small Scale Gasifier, Kaupp and GOSS.

OTHER RELEVANT PAPERS

CMERI PROGRAMME ON COM COMBUSTION AND FLUIDIZED BED GASIFICATION OF COAL

A. B. Datta
Central Mechanical Engineering Research Institute
Durgapur, India

CMERI PROGRAMME ON COM COMBUSTON AND FLUIDIZED BED GASIFICATION OF COAL

Dr. A.B. Datta
Power Engineering Laboratory
Central Mechanical Engineering
Research Institute
Durgapur-713209.

The recent oil crisis has led to a revaluation of coal as a fuel and research is being pushed forward in connection with various methods for coal utilisation. Direct use of coal generally entails several problems. Hence without major modification of the equipments running on oil or gas, use of coal oil mixture (COM) and gas from coal may provide an alternative source of energy. In this perspective CMERI, Durgapur has taken up two major projects: (i) Combustion of COM and (ii) Fluidized Bed Gasification of Coal. These projects came up to match India's need for wider utilisation of coal.

COAL OIL MIXTURE:

Coal oil mixture provides an immediate partial transition from oil to coal without major modifications of the existing furnaces. Many countries specially U.S.A. and Japan have already launched extensive R&D programmes for using COM in the existing oil fired furnaces, and the results are encouraging. In India Central Fuel Research Institute, Dhanbad has developed a process for producing stable coal-oil mixture. CMERI, Durgapur has been investigating its combustion characteristics so that necessary data can be generated for design information of COM burning equipment. Steel Authority of India is associated with this project for commercial applications in their furnaces. It has been identified that first commercialisation of COM in furnaces will be made in Rourkella Steel Plant boiler.

At the first stage the feasibility of COM burning has been studied in a foundry furnace (Fig.1). The furnace was

originally run on medium viscous furnace oil. The necessary minor modifications and special arrangements were incorporated to ensure satisfactory combustion. COM containing 20% and 30% coal has been successfully burnt in this furnace. However, this only generated first hand knowledge on COM combustion. An experimental furnace was necessary for detailed combustion investigation. The experimental furnace (Fig.2) with fuel handling system, air handling system, instrumentation and accessories have been designed on the basis of experience from feasibility studies. The furnace is about 13 ft. long and 2.5 ft. in diameter, capable of burning 25-30 kg. of COM per hour. The unit have facilities for studing the combustion efficiency, flame characteristics, particulate emissions etc. The effect of coal concentration on atomization and combustion will also be investigated. COM containing 20, 30, 40, 50 percent coal has been burnt in this furnace. Typical analysis of the coal are given in Table-1. Detailed investigation on COM combustion parameters are in progress. Recently a 120 hours run with 50:50 COM for erosion of burner (without firing) has been conducted. It has been observed that minor erosion (0.25%) took place. Detailed erosion study is in progress.

FLUIDIZED BED GASIFICATION OF COAL:

Fluidized bed gasification of coal has the potential for providing a clean gaseous fuel for gas fired furnaces. The fluidized bed type gasifier allows intimate mixing of solid and gas and provides a relatively long residence time compared to other gasification processes. The objective of the programme is to study the effect of the operating parameters on the performance of gasifier in order to generate engineering design of the system. The effect of specific parameters namely, bed temperature, coal grade, fluidizing velocity as also mode of steam injection would be investigated.

A bench scale unit capable of handling 15-20 kg. of coal/hr. has been designed. A schematic sketch of the gasifier unit is shown in Fig.3. The gasifying medium is steam and air.

The gasifier, 200mm x 200mm in cross section and 2000mm high is made of 3mm thick mild-steel plate. A refractory lining 25mm thick is provided on the inside wall. Steam supply line from an existing boiler has been layed. Provisions have been kept to inject steam into the gasifier from below and above the distributor. Over bed feeding of coal through a rotary feeder has been arranged.

Commissioning of the gasifier was made in November 1984. Initially undesirable clinker formation was occuring in the bed. This difficulty was overcome by adaption of suitable air and steam distribution system. Typical analysis of coal used in this study are given in Table-2. The gas sampling and its analysis is in progress. The gas analysed so far is poor in quality. Its cause has been partly identified. Investigation for improvement of gas quality is in progress. It is hoped that the initial troubles will be overcome soon.

Table-1: TYPICAL COAL ANALYSIS FOR COM

Coal - IB River Valley.

Proximate Analysis:

Moisture	-	10.4
Ash	-	16.0
V.M.	-	29.6
F.C.	-	44.0

Heating value - 5600 kcal/kg.

Table-2: TYPICAL COAL ANALYSIS FOR GASIFICATION

Coal - Khodiyar Colliery.

Size - 0-3 mm.

Proximate Analysis:

Moisture	-	1.9
Ash	-	37.3
V.M.	-	23.6
F.C.	-	37.2

Heating value - 4780 kcal/kg.

Acknowledgement: The author wishes to thank Dr. S. K. Basu, Director - MEC for his kind permission to publish the work. The author also to thank the team members of the project for their whole hearted

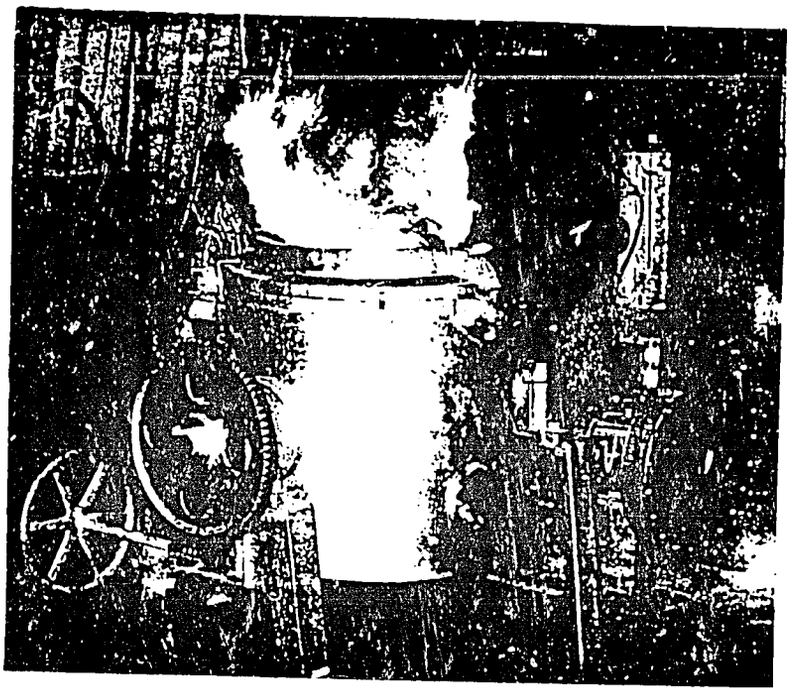

FIG 1. Conical Mixture Combustion in Foundry Furnace

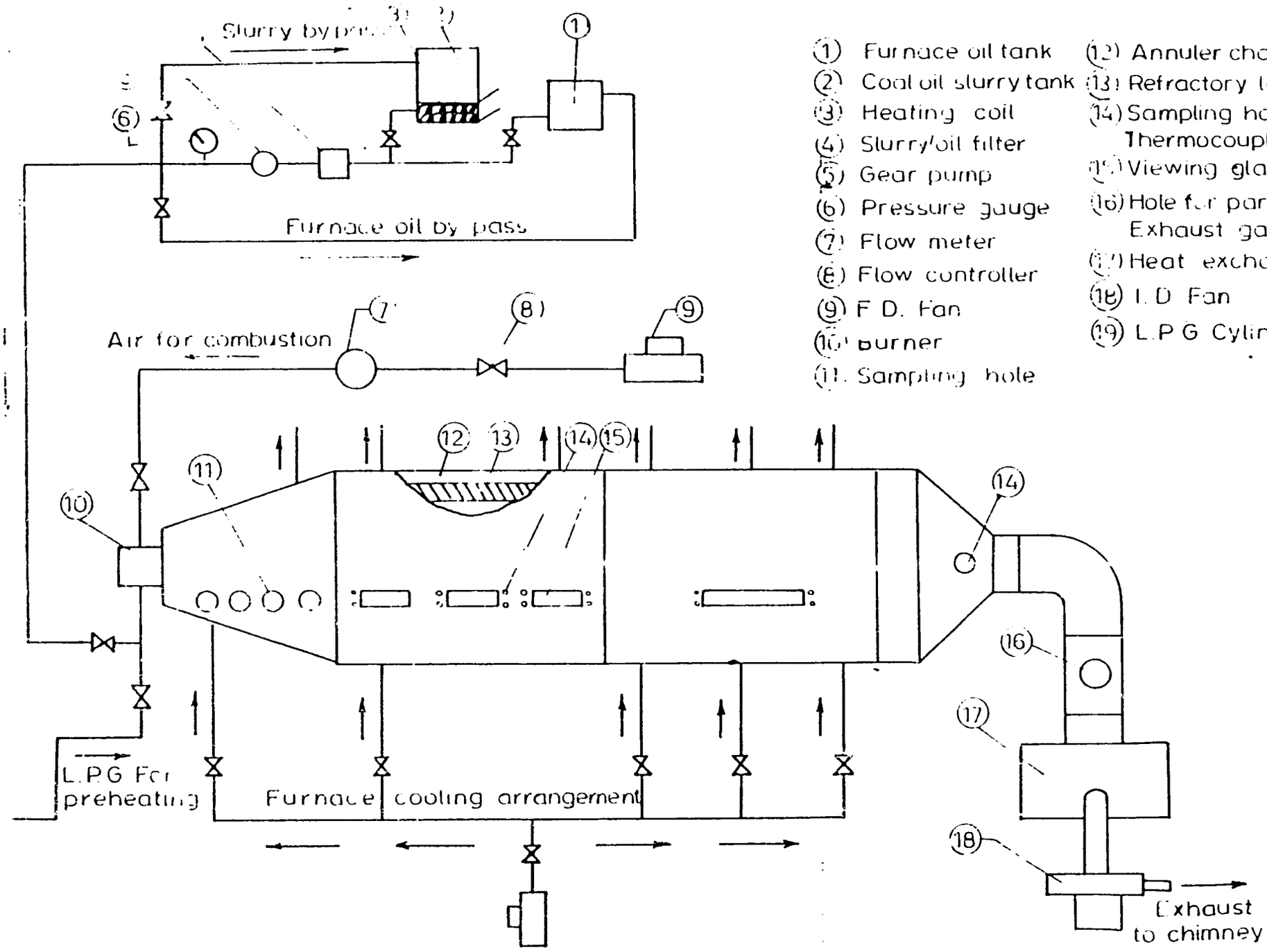

FIG. 4 EXPERIMENTAL SET UP FOR COAL OIL MIXTURE COMBUSTION

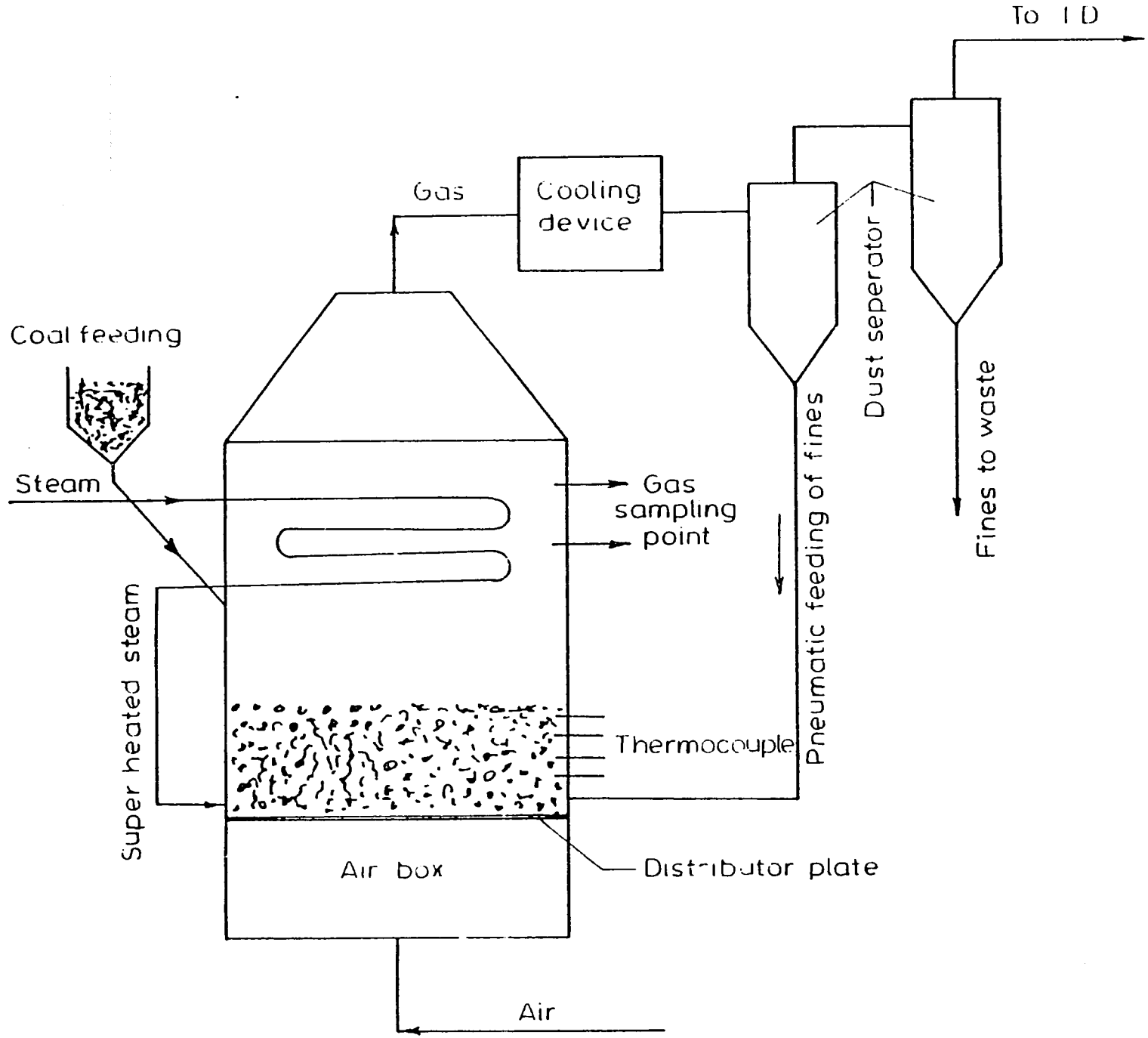

FIG 3 FLUIDIZED BED GASIFIER

M. S. Mianwal

Punjab Agro-Industries Corporation Ltd.
Chandigarh, India

PURPOSE OF PRESENTATION

TO HIGHLIGHT THE AVAILABILITY OF AGRO-RESIDUE IN PUNJAB

TO DESCRIBE THE POSSIBILITIES OF ITS USE AS THOUGHT OF BY PUNJAB AGRO INDUSTRIES

TO SEEK JOINT VENTURES/ COMMERCIAL ARRANGEMENTS FOR INDUSTRIAL PROMOTION IN PUNJAB

TO SEEK SUPPORT FOR THE DEVELOPMENTAL EFFORT.

AGRO-RESIDUE/ BIO-MASS AVAILABILITY IN PUNJAB

TOTAL AREA FOR LAND UTILIZATION	5033000 HECT.
NEW AREA SOWN	4210000 HECT
AREA SOWN MORE THAN ONCE	2719000 HECT
TOTAL CROPPED AREA	6929000 HECT

IMPORTANT AGRO RESIDUES

TOTAL SURPLUS PADDY STRAW	5 M TONS ANNUAL
PADDY HUSK	2 M TONS
COTTON STALKS	1 M TONS
BAGASSE	3 MILLION TONS. (AT PRESENT BURNT INEFFICIENTLY).
AREA UNDER FORESTS	224000 HECTS

THUS HIGHEST PER CAPITA AGRO RESIDUE IN THE COUNTRY.

POSSIBILITIES EXPLORED

DOWN DRAUGHT GASIFIERS FOR SHAFT POWER

FLUIDIZED BED BOILERS FOR BAGASSE BASED CO GENERATION FOR SUGAR MILLS

HIGH TEMP GASIFICATION SUCH AS PUROX PROCESS FOR POWER/METHANOL

UPDRAUGHT GASIFIERS FOR HUSK FIRED BOILERS

POWER GENERATION FROM PADDY HUSK.

DOWN DRAUGHT GASIFIER MANUFACTURER BY

PUNJAB AGRO-INDUSTRIES CORPORATION

DESIGNED BY DR. PATHAK

PRICED AT RS. 10,000/- (900 US$)

RATING 20-30 KVA

THROAT DIAMETERS 50 MM, 62.5 MM. 75 MM

HEAT VALUE OF GAS 5.2 TO 5.75 MJ/M^3

COLD GAS EFFICIENCY

FOR WOOD 73.3% TO 90%

FOR CROP RESIDUE 70.8% TO 77.2%

GAS COMPOSITION

H_2	12 TO 15.4%
CO	22 - 30%
CH_4	1.15 - 1.9%
N_2	7.2 TO 52.6%
CO_2	6.9 TO 13.1%

THROAT TEMP 1000 TO 1300°C

FLUIDISED BED BOILER BASED COGENERATION

PROJECT TAKEN FOR SUGAR MILL OF 2000 TPD

CRUSHING CAPACITY

TOTAL COST OF PROJECT 12 CRORES

TOTAL POWER GEN = 10 MW

SURPLUS POWER AVAILABLE = 5 MW

PUROX PROCESS FOR GASIFICATION OF PADDY STRAW

THIS USES JET OF PURE OXYGEN IN UPDRAUGHT GASIFIER TO RAISE TEMP IN COMBUSTION ZONE TO 1500 - 1600°C

MOLTEN ASH FLOWS OUT AS SLAG

PRODUCER GAS ANALYSIS BY VOLUME

CO	45%
H_2	30%
CH_4	0.2 TO 5%
CO_2	20 TO 25%

ECONOMIC APPRAISAL

CALORIFIC VALUE OF (15% MOISTURE) STRAW = 3145 K. CAL/KG.

ENERGY EFFICIENCY OF GASIFIER = 75 TO 77.5%

ENERGY EFFICIENCY OF METHANOL REFORMATION = 54%

OVERALL ENERGY RECOVERY = 42%

CONTD.. .

ENERGY CONTENT OF METHANOL = 4765 K CAL/KG.

HENCE 1 KG STRAW WOULD GIVE = 0.27 KG OF METHANOL

PROJECT COST	=	Rs. 38 CRORES
OPERATING COST / YR	=	Rs. 12.1 CRORES
REVENUE	=	Rs. 16.22 CRORES
NET SURPLUS	=	Rs. 4.1 CRORES
RETURN ON EQUITY	=	33.25%

FOR POWER GENERATION

PROJECT COST = Rs. 11 CRORES

OPERATING COST = Rs. 3.51 CRORES

NET POWER TO BE DELIVERED = 28620 MWH/YR.

APPENDIX B

ATTENDEES AND INVITED GUESTS

Y. P. Abbi
Deputy General Manager
Bharat Heavy Electricals Ltd.
18-20 Kasturba Gandhi Marg
New Delhi 110001,
India

Paul Arikkat
Mechanical Engineering Department
Indian Institute of Technology
Bombay 400076,
India

N. K. Arora
Deputy Director
National Productivity Council
Lodi Road
New Delhi,
India

P. N. Arumugham
General Manager
Bharat Heavy Electricals Ltd.
18-20 Kasturbi Gandhi Marg
New Delhi 110001,
India

K. K. Baveja
Asst. Prof., Dept. of Chemical Engineering
Indian Institute of Technology
Hauz Khas
New Delhi 1100016,
India

M. Bhatter

T. K. Bhowmik
Central Fuel Research Institute
P.O. FRI
Dhanbad 828108,
India

Daniel Bienstock
U.S. Department of Energy
Pittsburgh Energy Technology Cen
P.O. Box 10940
Pittsburgh, PA 15236

S. K. Bose
Director
Coal India, Ltd.
10 Netaji Subhas Road
Calcutta 1,
India

C. R. Cavale
Manager, Engineering Division
Shaw Wallace & Co., Ltd
Calcutta 1,
India

M. Chakraborty
Central Fuel Research Institute
P.O. FRI
Dhanbad 828108,
India

A. K. Chakravarti
Central Fuel Research
P.O. FRI
Dhanbad 828108,
India

S. Chandrasekaran
Bharat Heavy Electricals Ltd.
Tiruchirapalli 620014
Tamil Nadu,
India

Dipak B.R. Chaudhuri
Editor, URJA
P.O. Box 3008
G-82, Sujan Singh Park
New Delhi 110003,
India

S. K. Chopra

Owen Cylke
U.S. Agency for International Development
West Building
American Embassy
New Delhi 110021,
India

Harish Dak
Research Engineer, Thapar
Corporate Research & Development Center
Patiala 147001,
India

L. M. Das
Mechanical Engineering Department
Indian Institute of Technology
New Delhi,
India

S. Dasappa
Dept. of Agro-Space Engineering
Indian Institute of Science
New Delhi,
India

Maheshwar Dayal
Secretary, DNES
Block No. 14, C.G.O. Complex
Lodi Road
New Delhi,
India

A. K. Drona
Department of Mechanical Engineering
College of Agricultural Engrg. & Tec
Pant Nagar - 263 145,
India

M. B. Durgaprasad
Jyoti Solar Energy Institute
P.O. Box 20
Vallabh Vidyanagar 388120,
India

G. D. Dwarkani
Shaw Wallace & Co., Ltd.
Calcutta 1,
India

H. P. Engineer
79/80 Satkar
Nehru Place
New Delhi 19,
India

R. N. Engineer
79/80 Satkar
Nehru Place
New Delhi 19,
India

S. R. Faruqi
Joint Secretary, DNES
Block No. 14, C.G.O. Compl
Lodi Road
New Delhi 110003,
India

120

V. J. Flanigan
GROW
University of Missouri
221 Engineering Research Laboratory
Rolla, MO 65401

N. K. Gandhi

S. Gaur
Indian Institute of Technology
Hauz Khas
New Delhi 110016,
India

Madhav Ghate
U.S. Department of Energy
Morgantown Energy Technology Center
P.O. Box 880
Morgantown, WV 26505

S. K. Ghosh
Engineers India, Ltd.

K. L. Goel
DNES
Block No. 14, C.G.O. Complex
Lodi Road
New Delhi,
India

A. Gopalakrishnan
General Manager, Corporate R&D
Bharat Heavy Electricals Ltd.
Vikasnagar
Hyderabad 500 593,
India

John R. Goss
University of California, Davis
Dept. of Agricultural Engineering
Davis, CA 95616

A. K. Gupta
DNES
Block No. 14, C.G.O. Complex
Lodi Road
New Delhi,
India

J. Gururaja
Director, DNES
Block No. 14, C.G.O. Complex
Lodi Road
New Delhi,
India

S. B. Hukkeri
Head, Agro-Energy Research Centre
Indian Agricultural Resear n Insti
New Delhi,
India

Robert F. Ichord Jr.
Bureau for Asia
U.S. Agency for Internatic Devel
Room 3311, 2201 C Street
Washington, DC 20523

P.V.R. Iyer
Indian Institute of Techno
Hauz Khas
New Delhi,
India

B. Jagganna

S. K. Jain
101/2 Hospital Road
Jaipur 302001
Rajasthan,
India

* Jainarain

S. Jayaraman
Rural Energy Laboratory
CPRI
Bangalore,
India

M. H. Jethanandani
Vice President
Palarpur Industries
124 Janpath
New Delhi 110003,
India

N. J. Joshi

S. Kandpal
DNES
Block No. 14, C.G.O. Complex
Lodi Road
New Delhi 110003,
India

Mohan Kapila
Kapson's International
3, Laksmi Insurance Building
Asaf Ali Road
New Delhi 110002,
India

K. C. Khandelwal

B. C. Khanduja

A. K. Khater
Solar Sciences Consultancy Pvt. Ltd.
29 Saldhana Enclave
New Delhi,
India

Richard Killmeyer
U.S. Department of Energy
Pittsburgh Energy Technology Center
P.O. Box 10940
Pittsburgh, PA 15236

P. J. Krishna

Radha P. Krishnan
Oak Ridge National Laboratory
P.O. Box Y
Building 9108, Mail Stopl
Oak Ridge, TN 37830

V. M. Krishnasastri
Head, Mechanical Engineering Dept.
Indian Institute of Technology
Madras 600036,
India

Amol Kulkarni
Viking Energy Corporation
121 North Highland Avenue
Pittsburgh, PA 15206

M. Suresh Kumar
Corporate Research &Development
Bharat Heavy Electricals Ltd.
Vikasnagar
Hyderabad 500593,
India

Naresh Kumar
Eicher Research & Development Division
Faridabad
Haryana,
India

D. Kumaraswamy

R. C. Maheshwari
C.I.A.E.
Bhopal
Madhya Pradesh,
India

K.M.V. Malarkkan
Bharat Heavy Electricals Ltd.
Tiruchirapalli 620 014
Tamilnadu,
India

V. N. Manohar
Tata Consultancy Engineers
Bombay,
India

H. B. Mathur
Mechanical Engineering Department
Indian Institute of Technology
Hauz Khas
New Delhi 110016,
India

B. K. Mazumdar
Central Fuel Research Institute
P.O. PRI
Dhanbad
Bihar, Pin 828108,
India

S. K. Mazumdar

J. R. Meena
DNES
Block No. 14, C.G.O. Comple
Lodi Road
New Delhi 110003,
India

M. S. Mianwal
Manager, Renewable Energy
Punjab Agro-Industries Corp tion
S.C.O. 307-08, Sector 35-B
Chandigarh,
India

P. Misra
Deputy Director
National Productivity Co
Lodi Road
New Delhi 3,
India

Ved Mitra

K. Moulik
Indian Institute of Management
Ahmedabad 380015,
India

H. S. Mukunda
Indian Institute of Science
Bangalore,
India

Amitabh Pandey

A. C. Pandya
Honorary Director
Jyoti Solar Energy Institute
P.O. Box 20
Vallabh Vidyanagar 388120,
India

J. Pandya
Tata Energy Research Institute
90 Jor Bagh
New Delhi 110003,
India

J. A. Pandya
Gujrat Energy Development Agency
B. N. Chambers
R. C. Dutt Road
Vadodara 390005, Gujrat,
India

P. P. Parikh
Indian Institute of Technology
Bombay 400076,
India

L. A. Patel
Manager, R&D
Gujarat Agro-Industries Corporation Ltd.
Khet Udyhog Bhawan, Navrangpura
Ahmedabad 380014,
India

B. S. Pathak
Professor of Eminence
Punjab Agricultural University
Ludhiana,
India

K. L. Puri
Chairman and Managing Director
BHEL
18-20 Kasturba Gandhi Marg
New Delhi 110001,
India

S. Rajagopal

J. Rajeshwara

Anil K. Rajvanshi
Director, Energy Division
Nimbkar Agricultural Research I[illegible]ute
Phaltan 410523
Dist. Satara,
India

K. S. Ramachandaran
Kapson's International
3, Laksmi Insurance Building
Asaf Ali Road
New Delhi 110002,
India

N. N. Ramakrishnan
Group Head, Coal R&D
BHEL
Vikasnagar
Hyderabad 500593,
India

R. S. Rangan
Director, Project Plng. & Engrg.
BHEL
Vikasnagar
Hyderabad 500593,
India

T. R. Rao

J. Reddy
Dept. of Agro-Space Engineering
Indian Institute of Science
Bangalore 560012,
India

Vikram Reddy
State Council for Science

P. N. Sahagal
Head, Dept. of Chemical Engineering
Indian Institute of Technology
Hauz Khas
New Delhi,
India

S. P. Sakarwal

Jagdish K. Saluja
Viking Energy Corporation
121 North Highland Avenue
Pittsburgh, Pa 15206

S. Saluja
Under Sec'y, DNES
Block No. 14, C.G.O. Complex
Lodi Road
New Delhi 110003,
India

S. S. Sambi

M. M. Sarkar
Department of Chemical Engineering
Indian Institute of Technology
Hauz Khas
New Delhi,
India

M. M. Sen
Central Fuel Research Institute
P.O. FRI
Dhanbad 828108,
India

K. S. Shah
Gujrat Energy Development Agency
B. N. Chambers
R. C. Dutt Road
Vadodara 390005, Gujrat,
India

425

S. Shah
Head, Mechanical Engineering Dept.
Vallabh Vidyapeeth
Vidyanagar
Gujarat,
India

P.V.L.N. Sharma
Energy Systems Group
Bharat Heavy Electricals Ltd.
Tiruchirapalli 620014

India

R. D. Sharma
Junior Analyst, DNES
Block No. 14, C.G.O. Complex
Lodi Road
New Delhi 110003,
India

P. R. Shukla
Indian Institute of Management
Ahmedabad,
India

G. S. Sidhu
G. S. Sidhu Associates
3-3, F-4
Kakatiya Nagar
Hyderabad 500 007,
India

J. P. Singh
Damodar Ropeways & Const. Co. (P) Ltd.
1/A Vansittart Row
Calcutta 700001,
India

N. P. Singh
S.S.O.-I, DNES
Block No. 14, C.G.O. Complex
Lodi Road
New Delhi,
India

Narendra Singh
Director, DNES
Block No. 14, C.G.O. Complex
Lodi Road
New Delhi,
India

R. P. Singh
Bharat Heavy Electricals Ltd.

India

M. K. Sridhar
Director, Technical Services
BHEL Corporate Office
18-20 Kasturba Gandhi Marg
New Delhi 110001,
India

V. K. Srivastava

S. Sundararajan
Energy Systems Group
Bharat Heavy Electricals Ltd.
Tiruchirappali 620014
Tamil Nadu,
India

S. K. Sundararam
Biomass Energy (P) Ltd.
Madras
Tamil Nadu,
India

Diana L. Swain
U.S. Agency for International Development
West Building
American Embassy
New Delhi 110021,
India

Robert T. Vincent
Atmospheric PBC Division
Tennessee Valley Authority
1020 Chestnut Street
Chattanooga, TN 37401

Abu Talib
Energy, Resolurce & Env. Systems Div.
The MITRE Corporation/METREK Division
1820 Dolly Madison Boulevard
McLean, VA 22102

Damodar Thanvi
Rajas Than Vikas Sammallan
M.I. Road, opposite A.I.R.
Jaipur 302001
Rajasthan,
India

R. Vaidyeswaran
Deputy Director
Regional Research Laboratory
Hyderabad 500 009,
India

R. Vasudevan
GM/Specialist, Energy Systems Group
BHEL
Tiruchirapalli 620014
Tamilnadu,
India

O. P. Vimal
DNES
Block No. 14, C.G.O. Complex
Lodi Road
New Delhi 110003,
India